Illustrated Parts Manual

Models
450A & 450AJ
Series II

SN 0300065080 THROUGH
0300123999
&
PRIOR TO
SN 1300006000

*See Revision Log Page for exceptions

3121243

July 17, 2018 - Rev U

ANSI

CE

An Oshkosh Corporation Company

REVISION LOG

NOTE: The 450A/AJ Series II may be manufactured by JLG Industries in the following countries: USA, Belgium or Romania. Refer to the Serial Number Tag to determine the country of manufacture. The country of manufacture may be determined by the Serial Number. Boom Lifts manufactured in the USA will have a serial number prefix of 03 (i.e. 03XXXXXXX), Boom Lifts manufactured in Belgium will have a prefix of 13 (i.e. 13XXXXXXX) and Boom Lifts manufactured in Romania will have a prefix of E3 (i.e. E3XXXXXXX).

NOTES:

List of SN exceptions:

Use Parts Manual 3121243 for these SNs:
0300062713, 0300062755, 0300064188, 0300064241, 0300064340, 0300064366, 0300064407, 0300064430, 0300064580, 0300064581, 0300064583, 0300064605, 0300064606, 0300064607, 0300064608, 0300064609, 0300064691, 0300064705, 0300064706, 0300064735, 0300064737, 0300064753, 0300064754, 0300064774, 0300064775, 0300064792, 0300064794, 0300064806, 0300064918, 0300064923, 0300064924, 0300064927, 0300064928, 0300064933, 0300064934, 0300065012, 0300065014, 0300065015, 0300065028, 0300065031, 0300065032, 0300065046, 0300065049, 0300065050, 0300065063, 0300065066, 0300065067, 0300065078

REVISION LOG:

December 15, 2007 - A - Original Issue (Edited to B/M 0010578 Revision 121)

April 15, 2008 - B - Revised Manual (Edited to B/M 0010578 Revision 121)

March 30, 2009 - C - Revised Manual

October 30, 2009 - D - Revised Manual

August 25, 2010 - E - Revised Manual

April 4, 2011 - F - Revised Manual

July 8, 2011 - G - Revised Manual

October 18, 2011 - H - Revised Manual

December 12, 2011 - I - Revised Manual

March 30, 2012 - J - Revised Manual

June 15, 2012 - K - Revised Manual

August 22, 2012 - L - Revised Manual

November 6, 2012 - M - Revised Manual

March 25, 2013 - N - Revised Manual

May 15, 2013 - O - Revised Manual

August 28, 2013 - P - Revised Manual

November 27, 2013 - Q - Revised Manual

November 1, 2014 - R - Revised Manual

September 1, 2016 - S - Revised Manual (Revision 1)

July 21, 2017 - T - Revised Manual

July 17, 2018 - U - Revised Manual

GENERAL INFORMATION

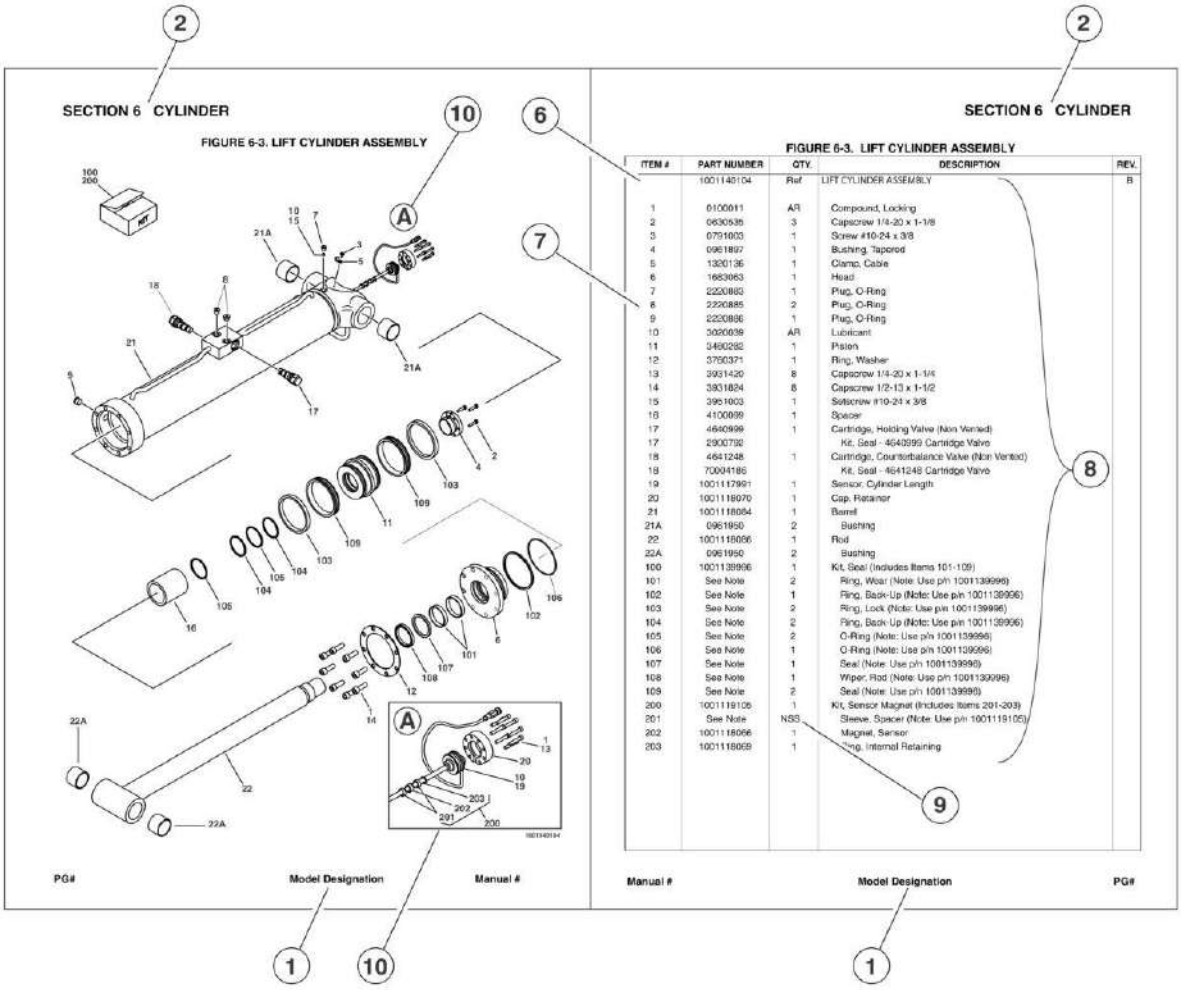

FIGURE 6-3. LIFT CYLINDER ASSEMBLY

ITEM #	PART NUMBER	QTY.	DESCRIPTION	REV.
	1001145104	Ref	LIFT CYLINDER ASSEMBLY	B
1	0100611	AR	Compound, Locking	
2	0630535	3	Capscrew 1/4-20 x 1-1/8	
3	0791003	1	Screw #10-24 x 3/8	
4	0961897	1	Bushing, Tapered	
5	1320136	1	Clamp, Cable	
6	1663063	1	Head	
7	2220883	1	Plug, O-Ring	
8	2220885	2	Plug, O-Ring	
9	2220886	1	Plug, O-Ring	
10	3020039	AR	Lubricant	
11	3460282	1	Piston	
12	3750371	1	Ring, Washer	
13	3931420	8	Capscrew 1/4-20 x 1-1/4	
14	3931824	8	Capscrew 1/2-13 x 1-1/2	
15	3951003	1	Setscrew #10-24 x 3/8	
16	4100899	1	Spacer	
17	4640999	1	Cartridge, Holding Valve (Non Vented)	
17	2900792		Kit, Seal - 4640999 Cartridge Valve	
18	4641248	1	Cartridge, Counterbalance Valve (Non Vented)	
18	70004186		Kit, Seal - 4641248 Cartridge Valve	
19	1001117991	1	Sensor, Cylinder Length	
20	1001118070	1	Cap, Retainer	
21	1001118084	1	Barrel	
21A	0961950	2	Bushing	
22	1001118066	1	Rod	
22A	0961950	2	Bushing	
100	1001139996	1	Kit, Seal (Includes Items 101-109)	
101	See Note	2	Ring, Wear (Note: Use p/n 1001139996)	
102	See Note	1	Ring, Back-Up (Note: Use p/n 1001139996)	
103	See Note	2	Ring, Lock (Note: Use p/n 1001139996)	
104	See Note	2	Ring, Back-Up (Note: Use p/n 1001139996)	
105	See Note	2	O-Ring (Note: Use p/n 1001139996)	
106	See Note	1	O-Ring (Note: Use p/n 1001139996)	
107	See Note	1	Seal (Note: Use p/n 1001139996)	
108	See Note	1	Wiper, Rod (Note: Use p/n 1001139996)	
109	See Note	2	Seal (Note: Use p/n 1001139996)	
200	1001119105	1	Kit, Sensor Magnet (Includes Items 201-203)	
201	See Note	NSS	Sleeve, Spacer (Note: Use p/n 1001119105)	
202	1001118066	1	Magnet, Sensor	
203	1001118069	1	Ring, Internal Retaining	

Manual # Model Designation PG#

1) MACHINE IDENTIFICATION

Machines are identified by model and in some cases a combination of models, serial number (SN) or redional standard (i.e ANSI, CE,CSA). Components may also be identified by SN or manufacturer. common components that may be identified by these characteristics are engines and hydraulic components.

2) PARTS MANUAL ORGANIZATION

Product informationin this manual is organized under section titles. Frame, Cylinder, Hydraulic and Electrical are a few examples. Each section is organized by figure and page number. The information within the Figure is then organized by item number, part number, description and corresponding illustration (s).

3) TABLE OF CONTENTS

A table of contents is found toward the beginning of the manual. Figure number, description and page number are provided for quick reference to the page containing the related information.

4) RECOMMENDED SPARE PARTS

The Recommended Spare Parts, located near the end of the manual, referance most frequently used maintenance parts.

5) PART NUMBER INDEX

A numerical index listing all part numbers and the corresponding page number(s) appears at the back of the manual.

GENERAL INFORMATION

6) NON-SERVICED PARTS

In sone instances, it is necessary to display non-serviced parts, assemblies or installations. In the case of assemblies and installations ther will be a Ref in the Qty column. In case of parts that are not available for service within assemblies or components, there will be a NSS (Not Sold Separately) or NLA (No Longer Available) listed in the Qty. column of the manual.

7) PARTS LIST ITEM NUMBERS

Numbers shown in the item# column correspond to numbers used in theassociated illustration (s). Item numbers which are mising from the sequence inthe parts list are not used on that page

8) INDENTED PARTS DESCRIPTION

An indented part description is included in the item under which it is indented.

9) ABB REVIATION AND SYMBOLS

AC ..... Alternating Current
ADE. ..... Advanced Design Electronics
ANSI ..... American National Standards Institute
AR. ..... As Required
ASSY ..... Assembly
AUX ..... Auxiliary
AWG ..... American Wire Gauge
B/M ..... Bill of Material
CE. ..... European Conformity
CCW ..... Counter Clockwise
cm ..... Centimeter
CW ..... Clockwise
CSA. ..... Canadian Standards Association
CYL ..... Cylinder
DIA. ..... Diameter
DC ..... Direct Current
EMS ..... Emergency Stop
ENG ..... Engine
FT(ft) ..... Feet
GA(Ga) ..... Gauge
HYD ..... Hydraulic
Hz. ..... Hertz
ID ..... Inside Diameter
in ..... inches
ISO ..... International Organization for Standards
JIC ..... Joint Industry Council
KG ..... Kilogram
L ..... Liter
LB ..... Pounds
LCD ..... Liquid Crystal Display
LED ..... Light Emitting Diodes
LH ..... Left Hand
LSS ..... Load Sensing System
M(m) ..... Metric/Meter
MM (mm) ..... Milimeter
mA ..... Miliamps
NLA ..... No Longer Available
NPT ..... National Pipe Threads
NSS ..... Not Sold Separately
OD ..... Outside Diameter
ORB ..... O-Ring Boss
ORFS ..... O-Ring Face Seal
OZ (oz). ..... Ounces
PG ..... Page
P/N. ..... Part Number
qt ..... Quarts
QTY ..... Quantity
REF ..... Reference
REV ..... Revision Level
RH ..... Right Hand
SAE ..... Society of Automotive Engineers
SN. ..... Serial Number
SPEC(S) ..... Specifications
T/T ..... Turntable
UGM ..... Universal Ground Module
V ..... Volts
W ..... Watts
..... Number

10) ILLUSTRATION REFERANCE LETTERS

When necessary, illustrations may contain referance letters that are intended to track information (i. e. hoses, harnesses) from one point to another or to track visual enlargement of components to show details that may be located in another area on the illustration.

Note: Due to continuous product improvements, JLG Industries, Inc. reserves the right to make specification changes without prior notification. Contact JLG Industries, Inc. for updated information.

TABLE OF CONTENTS

SECTION 1 - FRAME 11

FIGURE 1-1. AXLE AND STEERING INSTALLATION - 2WD WITHOUT TOW BAR 12
FIGURE 1-2. AXLE AND STEERING INSTALLATION - 2WD WITH TOW BAR 16
FIGURE 1-3. AXLE AND STEERING INSTALLATION - 4WD 20
FIGURE 1-4. TIRE AND WHEEL DRIVE INSTALLATIONS 28
FIGURE 1-5. FRAME SHIELDS INSTALLATION (SN 0300069841 through 0300123999, SN 13000000001 through 1300006000) 34
FIGURE 1-6. DRIVE HUB/BRAKE ASSEMBLY (REAR) 36
FIGURE 1-7. DRIVE HUB/BRAKE ASSEMBLY 40
FIGURE 1-8. DRIVE HUB ASSEMBLY (FRONT) (4WD ONLY) 44
FIGURE 1-9. DRIVE HUB ASSEMBLY (FRONT) (4WD ONLY) 48
FIGURE 1-10. DRIVE MOTOR ASSEMBLY (2WD) 52
FIGURE 1-11. DRIVE MOTOR ASSEMBLY (2WD) 54
FIGURE 1-12. DRIVE MOTOR ASSEMBLY (2WD) 58
FIGURE 1-13. DRIVE MOTOR ASSEMBLY (4WD) 62
FIGURE 1-14. DRIVE MOTOR ASSEMBLY (4WD) 66
FIGURE 1-15. DRIVE VALVES INSTALLATIONS 70
FIGURE 1-16. TOW BAR INSTALLATION (OPTIONAL) 74
FIGURE 1-17. SEMI-TRACK INSTALLATION 78

SECTION 2 - TURNTABLE 81

FIGURE 2-1. CONTROL VALVE INSTALLATION 82
FIGURE 2-2. MAIN CONTROL VALVE ASSEMBLY 84
FIGURE 2-3. TURNTABLE AND SWING DRIVE INSTALLATIONS 86
FIGURE 2-4. SWING MOTOR ASSEMBLY (ORIGINAL EQUIPMENT) 90
FIGURE 2-5. SWING MOTOR ASSEMBLY (SERVICE REPLACEMENT) 94
FIGURE 2-6. SWING BEARING AND ROTATION BOX ASSEMBLY (ORIGINAL EQUIPMENT) 96
FIGURE 2-7. SWING BEARING AND ROTATION BOX ASSEMBLY (SERVICE REPLACEMENT FOR 0440203) (SN 0300065080 through 0300069336) 100
FIGURE 2-8. SWING BEARING AND ROTATION BOX ASSEMBLY (SERVICE REPLACEMENT FOR 0440203 & 0440339) (SN 0300065080 through 0300069336) 102
FIGURE 2-9. SWING BEARING AND ROTATION BOX ASSEMBLY (SERVICE REPLACEMENT FOR 0440255 & 0440272) (SN 0300069337 through 0300123999, SN 1300000001 through 1300006000) 104
FIGURE 2-10. SWING BEARING AND ROTATION BOX ASSEMBLY (SERVICE REPLACEMENT FOR 0440255, 0440272 & 1001153016) (SN 0300069337 through 0300123999, SN 1300000001 through 1300006000) 106
FIGURE 2-11. USA BUILT MACHINES/CATERPILLAR ENGINE INSTALLATION 108
FIGURE 2-12. USA BUILT MACHINES/DEUTZ ENGINE INSTALLATION (SN 0300065080 through 0300077682) 118
FIGURE 2-13. USA BUILT MACHINES/DEUTZ ENGINE INSTALLATION (SN 0300077683 through 0300123999) 124
FIGURE 2-14. USA BUILT MACHINES/FORD ENGINE INSTALLATION (SN 0300065080 through 0300078472) 134
FIGURE 2-15. USA BUILT MACHINES/FORD ENGINE INSTALLATION (SN 0300078473 through 0300123999) 142
FIGURE 2-16. USA BUILT MACHINES/DUAL FUEL INSTALLATIONS (GAS MACHINES ONLY) 150
FIGURE 2-17. USA BUILT MACHINES/GM ENGINE INSTALLATION 154
FIGURE 2-18. USA BUILT MACHINES/PERKINS ENGINE INSTALLATION 160
FIGURE 2-19. BELGIUM BUILT MACHINES/DEUTZ ENGINE INSTALLATION (Prior to SN 1300000979) 168
FIGURE 2-20. BELGIUM BUILT MACHINES/DEUTZ ENGINE INSTALLATION (SN 1300000979 through 1300006000) 174
FIGURE 2-21. BELGIUM BUILT MACHINES/PERKINS ENGINE INSTALLATION 182
FIGURE 2-22. PISTON PUMP ASSEMBLY (SERIES M46 PUMP) 190
FIGURE 2-23. PISTON PUMP ASSEMBLY (SERIES 42 PUMP) 194
FIGURE 2-24. GEAR PUMP ASSEMBLY 200
FIGURE 2-25. AUXILIARY PUMP ASSEMBLY 202
FIGURE 2-26. TANK INSTALLATIONS 206
FIGURE 2-27. GROUND CONTROL BOX ASSEMBLY 210
FIGURE 2-28. ELECTRICAL OPTIONS INSTALLATION (TURNTABLE MOUNTED) 218
FIGURE 2-29. HOODS INSTALLATION 222
FIGURE 2-30. 2500W GENERATOR INSTALLATION - CATERPILLAR ENGINES (USA BUILT MACHINES) (OPTIONAL) 226
FIGURE 2-31. 2500W GENERATOR INSTALLATION - DEUTZ ENGINES (USA AND BELGIUM BUILT MACHINES) (OPTIONAL) 230
FIGURE 2-32. 2500W GENERATOR INSTALLATION - FORD ENGINES (USA BUILT MACHINES) (OPTIONAL) (SN 0300065080 through 0300078472) 236
FIGURE 2-33. 2500W GENERATOR INSTALLATION - FORD ENGINES (USA BUILT MACHINES) (OPTIONAL) (SN 0300078473 through 0300123999) 240
FIGURE 2-34. 2500W GENERATOR INSTALLATION - GM ENGINES (USA BUILT MACHINES) (OPTIONAL) 244
FIGURE 2-35. 2500W GENERATOR INSTALLATION - PERKINS ENGINES (USA AND BELGIUM BUILT MACHINES) (OPTIONAL) 248

TABLE OF CONTENTS

FIGURE 2-36. 7500W GENERATOR INSTALLATION - CATERPILLAR ENGINE MACHINES (USA BUILT MACHINES) 252
FIGURE 2-37. 7500W GENERATOR INSTALLATION - DEUTZ ENGINE MACHINES (USA BUILT MACHINES).....256
FIGURE 2-38. 7500W GENERATOR INSTALLATION - DEUTZ ENGINE MACHINES (BELGIUM BUILT MACHINES) 262
FIGURE 2-39. 7500W GENERATOR INSTALLATION - FORD ENGINE MACHINES (USA BUILT MACHINES).....268
FIGURE 2-40. 7500W GENERATOR INSTALLATION - GM ENGINE MACHINES (USA BUILT MSCHINES) 272
FIGURE 2-41. 7500W GENERATOR INSTALLATION - PERKINS ENGINE MACHINES (USA BUILT MACHINES) 278
FIGURE 2-42. 7500W GENERATOR INSTALLATION - PERKINS ENGINE MACHINES (BELGIUM BUILT MACHINES) 284

SECTION 3 - BOOM.....289

FIGURE 3-1. TOWER/MID BOOMS AND CYLINDERS INSTALLATION (USA BUILT MACHINES) (SN 0300065080 through 0300123999) 290
FIGURE 3-2. TOWER/MID BOOMS AND CYLINDERS INSTALLATION (BELGIUM BUILT MACHINES) - 450AJ SERIES II 296
FIGURE 3-3. MAIN BOOM INSTALLATION - 450A SERIES II.....300
FIGURE 3-4. MAIN BOOM INSTALLATION - 450AJ SERIES II (USA BUILT MACHINES) 304
FIGURE 3-5. MAIN BOOM INSTALLATION - 450AJ SERIES II (BELGIUM BUILT MACHINES) 308
FIGURE 3-6. MAIN BOOM ASSEMBLIES 312
FIGURE 3-7. ROTATOR ASSEMBLIES 316
FIGURE 3-8. PLATFORM SUPPORT AND CONTROL VALVES INSTALLATIONS (FRONT ENTRY PLATFORM).....320
FIGURE 3-9. PLATFORM SUPPORT AND CONTROL VALVES INSTALLATIONS (SIDE ENTRY PLATFORM).....324
FIGURE 3-10. PLATFORM SUPPORT INSTALLATION - WITH LSS 328

SECTION 4 - PLATFORM 331

FIGURE 4-1. PLATFORM INSTALLATION (USA BUILT MACHINES) (SN 0300065080 through 0300069154).....332
FIGURE 4-2. PLATFORM INSTALLATION (USA BUILT MACHINES AND BELGIUM BUILT MACHINES) (SN 0300069155 through 0300123999).....336
FIGURE 4-3. FALL ARREST PLATFORM COMPONENTS INSTALLATION (OPTIONAL).....340
FIGURE 4-4. SOFT TOUCH SYSTEM INSTALLATION (OPTIONAL).....342
FIGURE 4-5. PLATFORM CONSOLE ASSEMBLY 344
FIGURE 4-6. CONTROLLER ASSEMBLY (SWING AND LIFT) (ORIGINAL EQUIPMENT).....350
FIGURE 4-7. CONTROLLER ASSEMBLY (LIFT AND SWING) (SERVICE REPLACEMENT).....352
FIGURE 4-8. CONTROLLER ASSEMBLY (LIFT AND SWING) (SERVICE REPLACEMENT).....354
FIGURE 4-9. CONTROLLER ASSEMBLY (DRIVE AND STEER) (ORIGINAL EQUIPMENT) 358
FIGURE 4-10. CONTROLLER ASSEMBLY (DRVIE AND STEER) (SERVICE REPLACEMENT) 360
FIGURE 4-11. CONTROLLER ASSEMBLY (DRIVE AND STEER) (SERVICE REPLACEMENT) 362
FIGURE 4-12. SKYGLAZIER INSTALLATION - WITHOUT LSS (ANSI, CSA AND AUSTRALIAN SPECS).....364
FIGURE 4-13. SKYGLAZIER INSTALLATION - WITH LSS (AUSTRALIAN SPECS).....366
FIGURE 4-14. SKYWELDER INSTALLATION (50HZ).....368
FIGURE 4-15. SKYWELDER INSTALLATION (60HZ).....370
FIGURE 4-16. WELDER ASSEMBLY 372
FIGURE 4-17. SKYCUTTER INSTALLATION (SN 0300035080 through 0300119210) 374
FIGURE 4-18. SKYCUTTER INSTALLATION (SN 0300119211 through 0300123999) 376
FIGURE 4-19. PLASMA CUTTER ASSEMBLY 378
FIGURE 4-20. PLASMA CUTTER ASSEMBLY 380

SECTION 5 - CYLINDER.....383

FIGURE 5-1. USA BUILT MACHINES/AXLE LOCKOUT CYLINDER (SN 0300065080 through 0300107511).....384
FIGURE 5-2. USA BUILT MACHINES/AXLE LOCKOUT CYLINDER (SN 0300107512 through 0300123999).....386
FIGURE 5-3. USA BUILT MACHINES/LEVEL (PLATFORM SLAVE) CYLINDER (450A SERIES II) (ORIGINAL EQUIPMENT) (SN 0300065080 through 0300123999) 388
FIGURE 5-4. USA BUILT MACHINES/LEVEL (PLATFORM SLAVE) CYLINDER ASSEMBLY (450A SERIES II) (SERVICE REPLACEMENT) (SN 0300065080 through 0300123999) 390
FIGURE 5-5. USA BUILT MACHINES/LEVEL (PLATFORM) CYLINDER (450AJ SERIES II) (ORIGINAL EQUIPMENT) (SN 0300065080 through 0300123999) 392
FIGURE 5-6. USA BUILT MACHINES/LEVEL (PLATFORM) CYLINDER (450AJ SERIES II) (SERVICE REPLACEMENT) (SN 0300065080 through 0300123999) 394
FIGURE 5-7. USA BUILT MACHINES/LIFT (JIB) CYLINDER (450AJ SERIES II ONLY) (ORIGINAL EQUIPMENT) (SN 0300065080 through 0300123999) 396
FIGURE 5-8. USA BUILT MACHINES/LIFT (JIB) CYLINDER (450AJ SERIES II ONLY) (SERVICE REPLACEMENT) (SN 0300065080 through 0300123999) 398
FIGURE 5-9. USA BUILT MACHINES/LIFT (MAIN BOOM) CYLINDER (SN 0300065080 through 0300123999) 400
FIGURE 5-10. USA BUILT MACHINES/LIFT (TOWER BOOM) CYLINDER (SN 0300065080 through 0300123999) 402
FIGURE 5-11. USA BUILT MACHINES/MASTER CYLINDER (450A SERIES II) (ORIGINAL EQUIPMENT) (SN 0300065080 through 0300123999).....404

FIGURE 5-12. USA BUILT MACHINES/MASTER CYLINDER (450A SERIES II) (SERVICE REPLACEMENT) (SN 0300065080 through 0300123999) 406
FIGURE 5-13. USA BUILT MACHINES/MASTER CYLINDER (450AJ SERIES II) (ORIGINAL EQUIPMENT) (SN 0300065080 through 0300123999) 408
FIGURE 5-14. USA BUILT MACHINES/MASTER CYLINDER (450AJ SERIES II) (SERVICE REPLACEMENT) (SN 0300065080 through 0300123999) 410
FIGURE 5-15. USA BUILT MACHINES/STEER CYLINDER (SN 0300065080 through 0300087392) 412
FIGURE 5-16. USA BUILT MACHINES/STEER CYLINDER (SN 0300087393 through 0300123999) 414
FIGURE 5-17. USA BUILT MACHINES/TELESCOPE CYLINDER (SN 0300065080 through 0300123999) 416
FIGURE 5-18. BELGIUM BUILT MACHINES/AXLE LOCKOUT CYLINDER (Prior to SN 1300003222) 418
FIGURE 5-19. BELGIUM BUILT MACHINES/AXLE LOCKOUT CYLINDER (SN 1300003222 through 1300006000) 420
FIGURE 5-20. BELGIUM BUILT MACHINES/LEVEL (PLATFORM) CYLINDER (450AJ SERIES II) 422
FIGURE 5-21. BELGIUM BUILT MACHINES/LIFT (JIB) CYLINDER (450AJ SERIES II ONLY) 424
FIGURE 5-22. BELGIUM BUILT MACHINES/LIFT (MAIN BOOM) CYLINDER 426
FIGURE 5-23. BELGIUM BUILT MACHINES/LIFT (TOWER BOOM) CYLINDER 428
FIGURE 5-24. BELGIUM BUILT MACHINES/MASTER CYLINDER (450AJ SERIES II) 430
FIGURE 5-25. BELGIUM BUILT MACHINES/STEER CYLINDER 432
FIGURE 5-26. BELGIUM BUILT MACHINES/TELESCOPE CYLINDER 434

SECTION 6 - HYDRAULIC 437

FIGURE 6-1. AXLE LOCKOUT HYDRAULIC DIAGRAM - 2WD (USA BUILT MACHINES AND BELGIUM BUILT MACHINES) (SN 0300065080 through 0300077284, Prior to SN 1300000353) 438
FIGURE 6-2. AXLE LOCKOUT HYDRAULIC DIAGRAM - 2WD (USA BUILT MACHINES AND BELGIUM BUILT MACHINES) (SN 0300077285 through 0300107511, SN 1300000353 through 1300003221) 440
FIGURE 6-3. AXLE LOCKOUT HYDRAULIC DIAGRAM - 2WD (USA BUILT MACHINES AND BELGIUM BUILT MACHINES) (SN 0300107512 through 0300123999, SN 1300003222 through 1300006000) 442
FIGURE 6-4. AXLE LOCKOUT HYDRAULIC DIAGRAM - 4WD (USA BUILT MACHINES AND BELGIUM BUILT MACHINES) (SN 0300065080 through 0300077284, Prior to SN 1300000353) 444
FIGURE 6-5. AXLE LOCKOUT HYDRAULIC DIAGRAM - 4WD (USA BUILT MACHINES AND BELGIUM BUILT MACHINES) (SN 0300077285 through 0300107511, SN 1300000353 through 1300003221) 446
FIGURE 6-6. AXLE LOCKOUT HYDRAULIC DIAGRAM - 4WD (USA BUILT MACHINES AND BELGIUM BUILT MACHINES) (SN 0300107512 through 0300123999, SN 1300003222 through 1300006000) 448
FIGURE 6-7. DRIVE HYDRAULIC DIAGRAM - 2WD 450
FIGURE 6-8. DRIVE HYDRAULIC DIAGRAM - 2WD 454
FIGURE 6-9. DRIVE HYDRAULIC DIAGRAM - 2WD 458
FIGURE 6-10. DRIVE HYDRAULIC DIAGRAM - 4WD 462
FIGURE 6-11. DRIVE HYDRAULIC DIAGRAM - 4WD 466
FIGURE 6-12. STANDARD HYDRAULIC DIAGRAM 470
FIGURE 6-13. TOW BAR HYDRAULIC DIAGRAM 474
FIGURE 6-14. HYDRAULIC DIAGRAM LIST 476

SECTION 7 - ELECTRICAL 481

FIGURE 7-1. ELECTRICAL DIAGRAM LIST 482
FIGURE 7-2. HARNESS COMPONENTS INSTALLATION 484

SECTION 8 - DECALS 507

FIGURE 8-1. DECAL INSTALLATION - ANSI SPEC (USA BUILT MACHINES) (SN 0300065080 through 0300069154) 508
FIGURE 8-2. DECAL INSTALLATION - ANSI SPEC (USA BUILT MACHINES AND BELGIUM BUILT MACHINES) (SN 0300069155 through 0300123999, SN 1300000001 through 1300006000) 512
FIGURE 8-3. DECAL INSTALLATION - ANSI EXPORT SPECS (USA BUILT MACHINES) (SN 0300065080 through 0300069154) 516
FIGURE 8-4. DECAL INSTALLATION - ANSI EXPORT SPECS (USA BUILT MACHINES AND BELGIUM BUILT MACHINES) (SN 0300069155 through 0300123999, SN 1300000001 through 1300006000) 520
FIGURE 8-5. DECAL INSTALLATION - CE AND AUSTRALIAN SPECS (USA BUILT MACHINES) (SN 0300065080 through 0300069154) 526
FIGURE 8-6. DECALS INSTALLATION - AUSTRALIAN AND CE SPECS (USA BUILT MACHINES AND BELGIUM BUILT MACHINES) (SN 0300069155 through 0300074818, SN 1300000001 through 1300000180) 530
FIGURE 8-7. DECALS INSTALLATION - AUSTRALIAN AND CE SPECS (USA BUILT MACHINES AND BELGIUM BUILT MACHINES) (SN 0300074819 through 0300123999, SN 1300000180 through 1300006000) 534

SECTION 9 - RECOMMENDED SERVICE PARTS STOCK 537

FIGURE 9-1. MODEL 450A / 450AJ SERIES II STANDARD PARTS 538
FIGURE 9-2. MODEL 450A / 450AJ SERIES II VARIABLE PARTS 540

TABLE OF CONTENTS

SECTION 10 - SPECIAL OPTIONS 541

FIGURE 10-1. SPECIAL OPTIONS 542

PART NUMBER INDEX 547

SECTION 1 - FRAME

FIGURE 1-1. AXLE AND STEERING INSTALLATION - 2WD WITHOUT TOW BAR

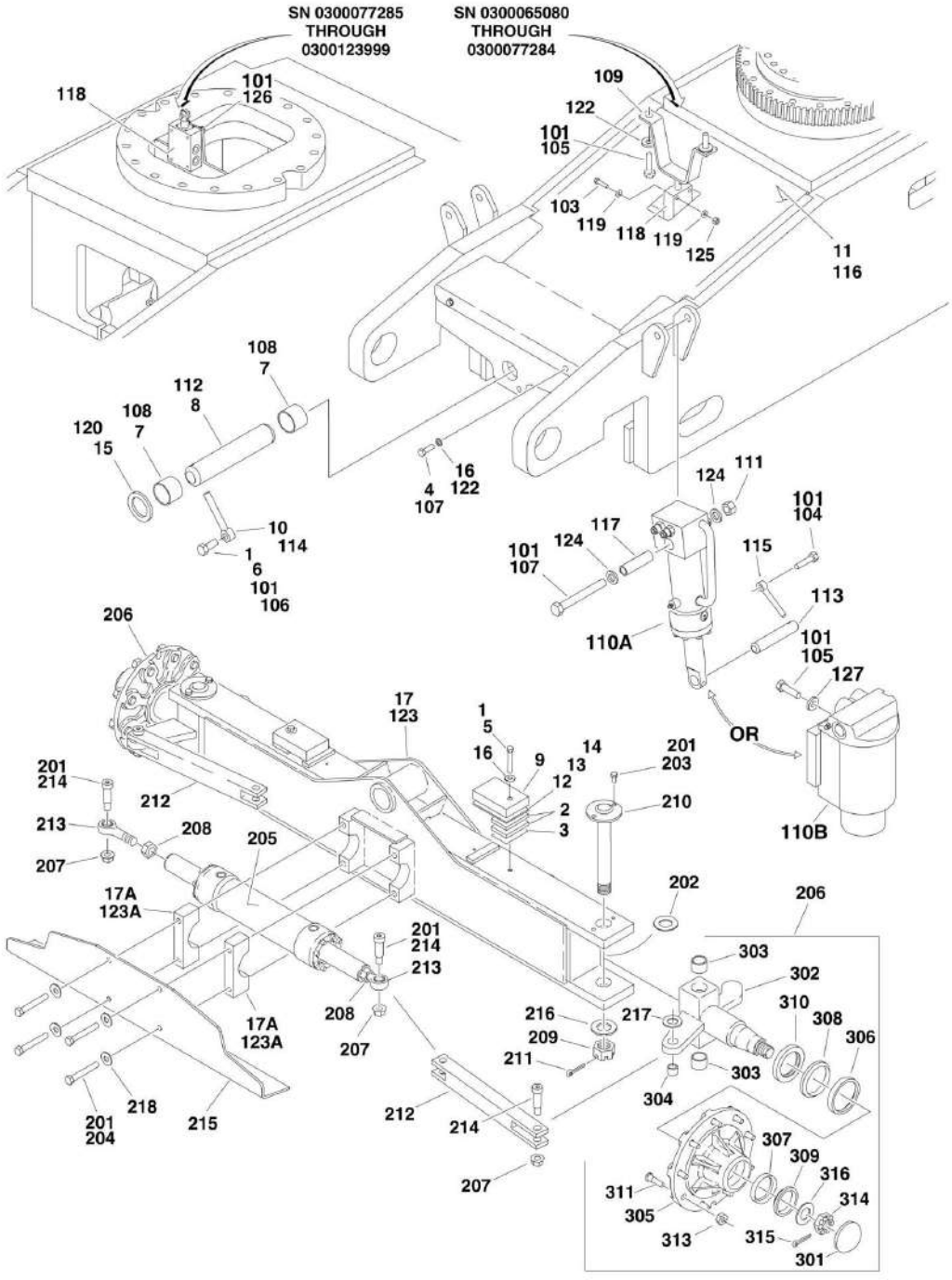

FIGURE 1-1. AXLE AND STEERING INSTALLATION - 2WD WITHOUT TOW BAR

ITEM	PART NUMBER	QTY	DESCRIPTION	REV
		Ref	**FIXED AXLE INSTALLATION**	
	0270971	Ref	**Fixed Axle (SN 0300065080 through 0300107511)**	E
	0274690	Ref	**Fixed Axle (SN 0300107512 through 0300123999)**	A
		Ref	**Note: USA Manufacture Only.**	
1	0100011	AR	Compound, Locking	
2	0362763	4	Bar, Stop	
3	0362764	2	Bar, Stop	
4		Ref	Bolt 3/8in-16NC x 7/8in	
4	0641607	2	Hex HD Capscrew Gr5, 3/8-16 X 7/8 Lg **(SN 0300065080 through 0300069840)**	
4	See Note	2	Hex HD Capscrew Gr5, 3/8-16 X 7/8 Lg (See FRAME SHIELDS INSTALLATION for call out) **(SN 0300069841 through 0300123999)**	
5	0641626	2	Bolt 3/8in-16NC x 3-1/4in	
6	0642012	1	Bolt 5/8in-11NC x 1-1/2in	
7	0961950	2	Bushing, Garmax	
8	3422592	1	Pin, Axle Pivot	
9	3570901	2	Plate, Stop	
10	3841258	1	Keeper, Pin	
11		Ref	Shield, Frame	
11	4061020	1	Shield, Frame **(SN 0300065080 through 0300069840)**	
11	See Note	1	Shield, Frame (See FRAME SHIELDS INSTALLATION for call out) **(SN 0300069841 through 0300123999)**	
12	4070972	AR	Shim 3/16in	
13	4070973	AR	Shim 1/8in	
14	4070974	AR	Shim 1/16in	
15	4740158	1	Thrustwasher	
16	4751600	2	Flatwasher 3/8in Regular	
17		Ref	Axle Weldment Options:	
17	4846352	1	Axle **(SN 0300065080 through 0300107511)**	
17	0280200	1	Axle **(SN 0300107512 through 0300123999)**	
17A	0561300	NLA	Steer Cylinder Mounting Block Assy (Use p/n 1001100424)	
18	2220235	3	Fitting, O-Ring (Not Shown)	
		Ref	**OSCILLATING AXLE INSTALLATIONS**	
	0270970	Ref	**Oscillating Axle (SN 0300065080 through 0300077284)**	G
	0273487	Ref	**Oscillating Axle (SN 0300077285 through 0300107511)**	C
	0274685	Ref	**Oscillating Axle (SN 0300107512 through 0300123999)**	A
		Ref	**Note: USA Manufacture Only.**	
101	0100011	AR	Compound, Locking	
101	0100019	AR	Compound, Locking	
102	0100038	AR	Primer, Locking #7471	
103	0641416	4	Bolt 1/4in-20NC x 2in **(SN 0300065080 through 0300077284)**	
104	0641607	2	Bolt 3/8in-16NC x 7/8in **(SN 0300065080 through 0300107511)**	
105	0641814	AR	Bolt 1/2in-13NC x 1-3/4in	
106	0642012	1	Bolt 5/8in-11NC x 1-1/2in	
107	0682248	2	Bolt 3/4in-10NC x 6in **(SN 0300065080 through 0300107511)**	
108	0961950	2	Bushing, Garmax	
109		Ref	Cam, Lockout Options:	
109	1100127	1	Cam, Lockout **(SN 0300065080 through 0300069336)**	
109	1100133	1	Cam, Lockout **(SN 0300069337 through 0300077284)**	

SECTION 1 - FRAME

ITEM	PART NUMBER	QTY	DESCRIPTION	REV
109	Not Required	1	Cam, Lockout **(SN 0300077285 through 0300123999)**	
110		Ref	Lockout Cylinder Assembly Options (See CYLINDER SECTION for Breakdown):	
110A	1684129	2	Lockout Cylinder Assembly **(SN 0300065080 through 0300069336)**	
110B	1684465	2	Lockout Cylinder Assembly **(SN 0300069337 through 0300077285)**	
111	3272201	2	Nut 3/4in-10NC **(SN 0300065080 through 0300107511)**	
112	3422592	1	Pin, Axle Pivot	
113	3422520	2	Pin **(SN 0300065080 through 0300107511)**	
114	3841258	1	Keeper, Pin	
115	3841220	2	Keeper, Pin **(SN 0300065080 through 0300107511)**	
116		Ref	Shield, Frame	
116	4061020	1	Shield, Frame **(SN 0300065080 through 0300069840)**	
116	See Note	1	Shield, Frame (See FRAME SHIELDS INSTALLATION for call out) **(SN 0300069841 through 0300123999)**	
117	4567462	2	Tube, Mounting **(SN 0300065080 through 0300107511)**	
118		Ref	Lockout Valve Assembly Options:	
118	4640871	1	Valve **(SN 0300065080 through 0300077284)**	
118	7012693	1	Seal Kit - 4640871 Valve	
118	7002840	1	Anti-Rotation Pin Removal Tool	
118	4641265	1	Valve **(SN 0300077285 through 0300123999)**	
119	4711400	8	Flatwasher 1/4in Thin **(SN 0300065080 through 0300077284)**	
120	4740158	1	Thrustwasher	
122	4751800	4	Flatwasher 1/2in Regular **(SN 0300065080 through 0300077284)**	
123		Ref	Axle Weldment Options:	
123	4846352	1	Axle Weldment **(SN 0300065080 through 0300107511)**	
123	0280200	1	Axle Weldment **(SN 0300107512 through 0300123999)**	
123A	0561300	NLA	Steer Cylinder Mounting Block Assy (Use p/n 1001100424)	
124	4892200	4	Flatwasher 3/4in Hardened **(SN 0300065080 through 0300107511)**	
125	3311405	4	Locknut 1/4in-20NC **(SN 0300065080 through 0300077284)**	
126	0791506	4	Screw, 5/16in-18NC x 3/4in **(SN 0300077285 through 0300123999)**	
127	4891800	4	Flatwasher, Hardened 1/2in **(SN 0300107512 through 0300123999)**	
	0271012	Ref	**STEERING INSTALLATION**	G
		Ref	**Note: USA Manufacture Only.**	
201	0100011	AR	Compound, Locking	
202	0440162	2	Thrustwasher	
203	0641606	4	Bolt 3/8in-16NC x 3/4in	
204	0681826	4	Bolt 1/2in-13NC x 3-1/4in	
205		Ref	Steer Cylinder Assembly Options (See CYLINDER SECTION for Breakdown):	
205	1683614	NLA	Steer Cylinder Assembly (Use p/n 1684412) **(SN 0300065080 through 0300087391)**	
205	1684412	1	Steer Cylinder Assembly **(SN 0300087392 through 0300123999)**	
206	2780230	2	Hub/Spindle Assembly (See Items 301-316 for Breakdown)	
207	3312008	4	Nut 5/8in-11NC	
208	3322201	2	Nut 3/4in-16NF	
209	3323003	2	Nut 1-1/4in-12NF	
210	3422692	2	Kingpin	

ITEM	PART NUMBER	QTY	DESCRIPTION	REV
211	3450808	2	Pin, Cotter 1/4in x 2in	
212	3841377	2	Tie-Rod	
213	3841517	2	Rod-End with Grease Fitting	
214	3900109	4	Screw, Shoulder	
215	4060950	1	Shield, Frame **(SN 0300065080 through 0300074064)**	
216	4713000	2	Flatwasher 1-1/4in Thin	
217	4740086	2	Thrustwasher	
218	4751800	4	Flatwasher 1/2in Regular	
	2780230	Ref	**HUB ASSEMBLY**	A
301	7020033	2	Cap, Dust (1 per Assembly)	
302	7020034	2	Spindle Assembly (1 per Assembly)	
303	0961951	4	Bushing, Garmax (2 Per Assembly)	
304	0962140	2	Bearing, Garmax (1 per Assembly)	
305	7020035	2	Hub (1 per Assembly) (Includes 306 AND 307)	
306	7020036	2	Cup, Bearing - Inner(1 per Assembly)	
307	7020038	2	Cup, Bearing - Outer (1 per Assembly)	
308	7020037	2	Cone, Bearing - Inner (1 per Assembly)	
309	7020039	2	Cone, Bearing - Outer (1 per Assembly)	
310	7020040	2	Seal (1 Per Assembly)	
311	7020041	18	Stud, Wheel (9 Per Assembly)	
313	7020042	18	Lugnut (9 per Assembly)	
314	7020054	2	Nut, Castle (1 per Assembly)	
315	3450608	2	Pin, Cotter (1 Per Assembly)	
316	7020055	2	Washer, Spindle (1 Per Assembly)	

FIGURE 1-2. AXLE AND STEERING INSTALLATION - 2WD WITH TOW BAR

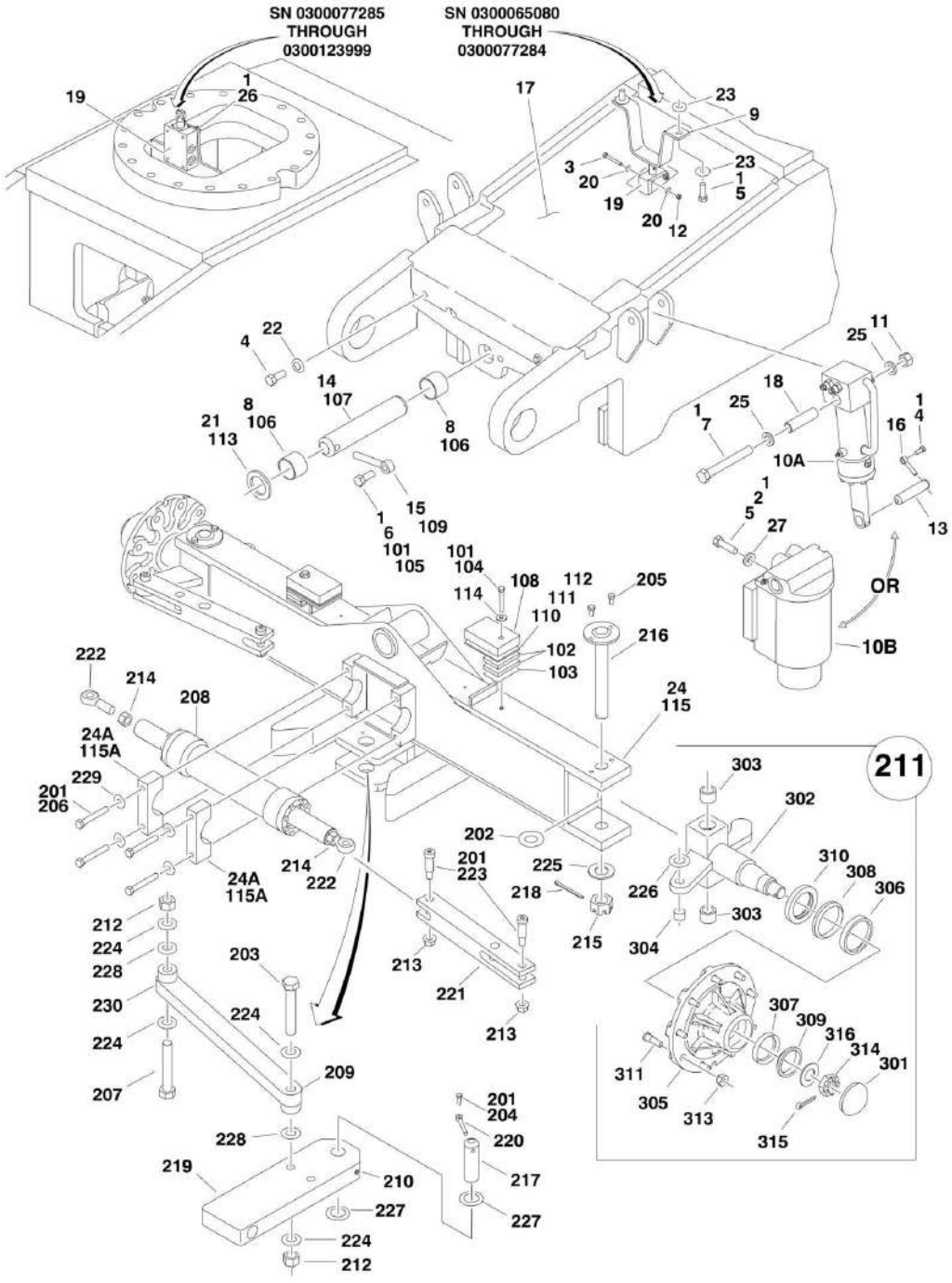

FIGURE 1-2. AXLE AND STEERING INSTALLATION - 2WD WITH TOW BAR

ITEM	PART NUMBER	QTY	DESCRIPTION	REV
		Ref	**OSCILLATING AXLE INSTALLATIONS**	
	0271656	Ref	**Install 2wd Axle (Osc) Tow Bar (SN 0300065080 through 0300077284)**	C
	0273489	Ref	**Install, Axle (2wd , Osc , Tow) (SN 0300077285 through 0300107511)**	C
	0274705	Ref	**Install, Axle (Osc) Tow bar 450A/AJ (SN 0300107512 through 0300123999)**	A
		Ref	**Note: USA Manufacture Only.**	
1	0100011	AR	Compound, Locking	
1	0100019	AR	Compound, Locking	
2	0100038	AR	Primer, Locking #7471	
3	0641416	4	Bolt 1/4in-20NC x 1-3/4in **(SN 0300065080 through 0300077284)**	
4	0641607	2	Bolt 3/8in-16NC x 7/8in **(SN 0300065080 through 0300107511)**	
5	0641814	AR	Bolt 1/2inin-13NC x 1-3/4in	
6	0642012	1	Bolt 5/8in-11NC x 1-1/2in	
7	0682248	2	Bolt 3/4in-10NC x 6in **(SN 0300065080 through 0300107511)**	
8	0961950	2	Bushing, Garmax	
9		Ref	Cam, Lockout Options:	
9	1100127	1	Cam, Lockout **(SN 0300065080 through 0300069336)**	
9	1100133	1	Cam, Lockout **(SN 0300069337 through 0300077285)**	
9	Not Required	1	Cam, Lockout **(SN 0300077285 through 0300123999)**	
10		Ref	Lockout Cylinder Assembly Options (See CYLINDER SECTION for Breakdown):	
10A	1684129	2	Lockout Cylinder Assembly **(SN 0300065080 through 0300107511)**	
10B	1684465	2	Lockout Cylinder Assembly **(SN 0300107512 through 0300123999)**	
11	3272201	2	Nut 3/4in-10NC **(SN 0300065080 through 0300107511)**	
12	3311405	4	Locknut 1/4in-20NC **(SN 0300065080 through 0300077284)**	
13	3422520	2	Pin **(SN 0300065080 through 0300107511)**	
14	3422592	1	Pin, Axle Pivot	
15	3841258	2	Keeper, Pin	
16	3841520	1	Keeper, Pin **(SN 0300065080 through 0300107511)**	
17		Ref	Shield, Frame Options:	
17	4061020	1	Shield, Frame **(SN 0300065080 through 0300069840)**	
17	See Note	1	Shield, Frame (See FRAME SHIELDS INSTALLATION for call out) **(SN 0300069841 through 0300123999)**	
18	4567462	2	Tube, Mounting **(SN 0300065080 through 0300107511)**	
19		Ref	Lockout Valve Assembly Options:	
19	4640871	1	Valve **(SN 0300065080 through 0300077284)**	
19	7012693	1	Seal Kit - 4640871 Valve	
19	7002840	1	Anti-Rotation Pin Removal Tool	
19	4641265	1	Valve **(SN 0300077285 through 0300123999)**	
20	4711400	8	Flatwasher 1/4in Thin **(SN 0300065080 through 0300123999)**	
21	4740158	1	Thrustwasher	
23	4751800	4	Flatwasher 1/2in Regular **(SN 0300065080 through 0300077284)**	
24		Ref	Axle Weldment Options:	
24	4846426	1	Axle Weldment **(SN 0300065080 through 0300107511)**	
24	0280201	1	Axle Weldment **(SN 0300107512 through 0300123999)**	
24A	0561300	NLA	Steer Cylinder Mounting Block Assy (Use p/n 1001100424)	

SECTION 1 - FRAME

ITEM	PART NUMBER	QTY	DESCRIPTION	REV
25	4892200	4	Flatwasher 3/4in Hardened	
26	0791506	4	Screw, 5/16in-18NC x 3/4in Only **(SN 0300077285 through 0300123999)**	
27	4891800	8	Flatwasher, Hardened 1/2in **(SN 0300107512 through 0300123999)**	
		Ref	**FIXED AXLE INSTALLATION**	
	0273077	Ref	**Axle, Fixed 2wd (Tow Bar) (SN 0300065080 through 0300107511)**	C
	0274706	Ref	**Install, Axle (Fixed) 450A/AJ (SN 0300107512 through 0300123999)**	A
		Ref	**Note: USA Manufacture Only.**	
101	0100011	AR	Compound, Locking	
102	0362763	4	Bar, Stop	
103	0362764	2	Bar, Stop	
104	0641626	2	Bolt 3/8in-16NC x 3-1/4in	
105	0642012	1	Bolt 5/8in-11NC x 1-1/2in	
106	0961950	2	Bushing, Garmax	
107	3422592	1	Pin, Axle Pivot	
108	3570901	2	Plate, Stop	
109	3841258	1	Keeper, Pin	
110	4070972	AR	Shim 3/16in	
111	4070973	AR	Shim 1/8in	
112	4070974	AR	Shim 1/16in	
113	4740158	1	Thrustwasher	
114	4751600	2	Flatwasher 3/8in Regular	
115		Ref	Axle Weldment Options:	
115	4846426	1	Weld, Axle-Steer **(SN 0300065080 through 0300107511)**	
115	0280201	1	Weld, Axle-Steer **(SN 0300107512 through 0300123999)**	
115A	0561300	NLA	Steer Cylinder Mounting Block Assy (Use p/n 1001100424)	
116	2220235	4	Fitting, O-Ring (Not Shown - See HYDRAULICS SECTION)	
	0271653	Ref	**STEERING INSTALLATION**	E
		Ref	**Note: USA Manufacture Only.**	
201	0100011	AR	Compound, Locking	
202	0440162	2	Thrustwasher	
203	0630544	1	Bolt 1in-8NC x 6in	
204	0641508	1	Bolt 5/16in-18NC x 1in	
205	0641606	4	Bolt 3/8in-16NC x 3/4in	
206	0681824	4	Bolt 1/2in-13NC x 3in	
207	0682648	1	Bolt 1in-8NC x 6in	
208		Ref	Steer Cylinder Assembly Options (See CYLINDER SECTION for Breakdown):	
208	1683614	NLA	Cylinder, Steer (Use p/n 1684412) **(SN 0300065080 through 0300087391)**	
208	1684412	1	Cylinder, Steer **(SN 0300087392 through 0300123999)**	
209	2160001	2	Fitting, STR Grease	
210	2160002	1	Fitting, STR Grease	
211	2780230	2	Hub/Spindle Assembly (See 201-213 for Breakdown)	
212	3272605	2	Locknut 1in-8NC	
213	3312008	4	Nut 5/8in-11NC	
214	3322201	2	Nut 3/4in-16NF	
215	3323003	2	Nut 1-1/4in-12NF	
216	3422692	2	Kingpin	
217	3422848	1	Pin, Hitch	

ITEM	PART NUMBER	QTY	DESCRIPTION	REV
218	3450812	2	Pin, Cotter 1/4in x 3in	
219	3571975	1	Plate, Tow Bar Pivot	
220	3841143	1	Keeper	
221	3841458	2	Tie-Rod	
222	3841517	2	Rod-End	
223	3900109	4	Screw, Shoulder	
224	4712600	4	Flatwasher 1in Thin	
225	4713000	2	Flatwasher 1-1/4in Thin	
226	4740086	2	Thrustwasher	
227	4740155	2	Thrustwasher	
228	4740491	2	Thrustwasher	
229	4751800	4	Flatwasher 1/2in Regular	
230	4846162	1	Link	
	2780230	Ref	**HUB ASSEMBLY**	A
301	7020033	2	Cap, Dust (1 per Assembly)	
302	7020034	2	Spindle Assembly (1 per Assembly)	
303	0961951	4	Bushing, Garmax (2 Per Assembly)	
304	0962140	2	Bearing, Garmax (1 per Assembly)	
305	7020035	2	Hub (1 per Assembly) (Includes 306 & 307)	
306	7020036	2	Cup, Bearing - Inner(1 per Assembly)	
307	7020038	2	Cup, Bearing - Outer (1 per Assembly)	
308	7020037	2	Cone, Bearing - Inner (1 per Assembly)	
309	7020039	2	Cone, Bearing - Outer (1 per Assembly)	
310	7020040	2	Seal (1 Per Assembly)	
311	7020041	18	Stud, Wheel (9 Per Assembly)	
313	7020042	18	Lugnut (9 per Assembly)	
314	7020054	2	Nut, Castle (1 per Assembly)	
315	3450608	2	Pin, Cotter (1 Per Assembly)	
316	7020055	2	Washer, Spindle (1 Per Assembly)	

FIGURE 1-3. AXLE AND STEERING INSTALLATION - 4WD

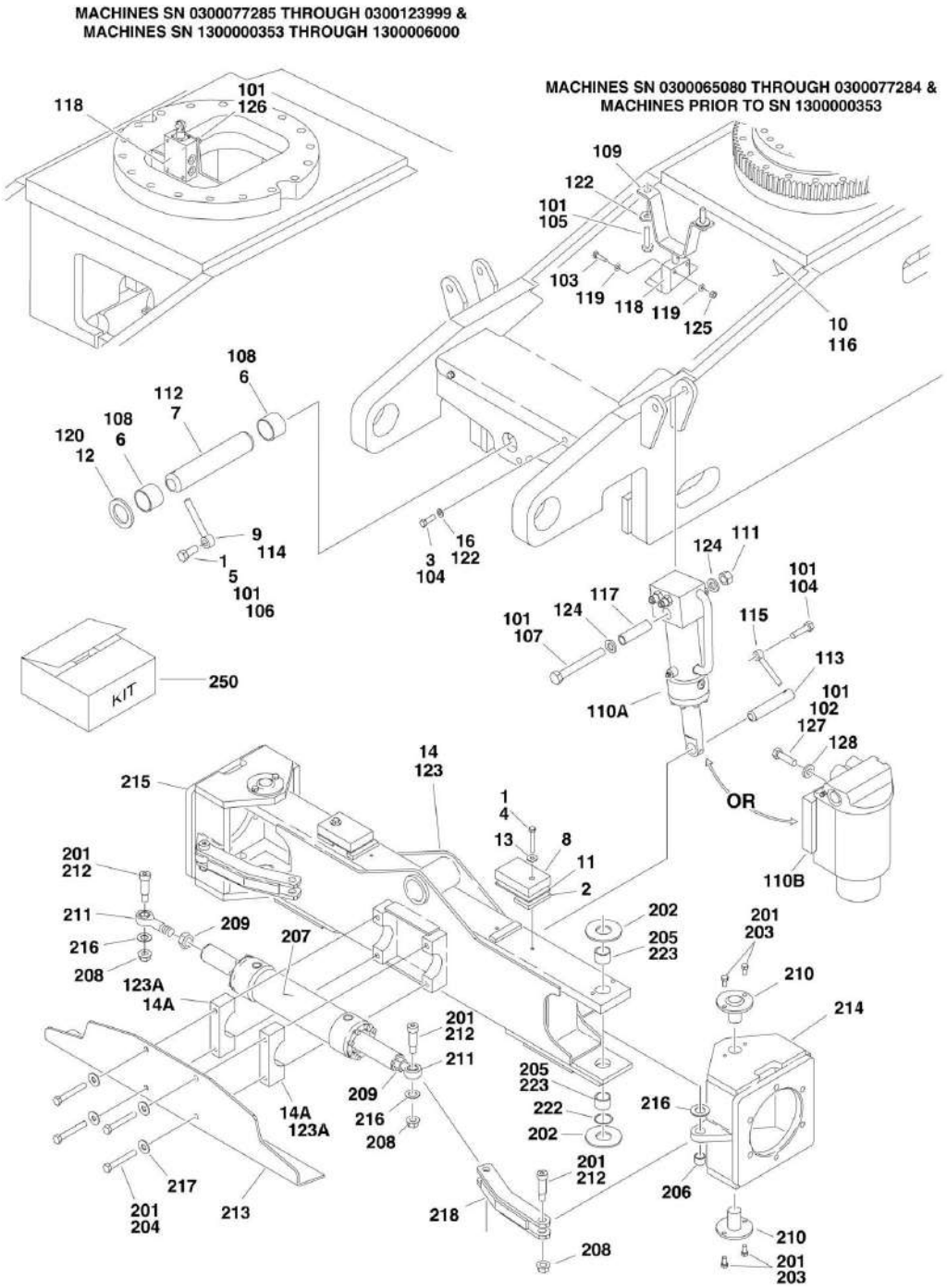

FIGURE 1-3. AXLE AND STEERING INSTALLATION - 4WD

ITEM	PART NUMBER	QTY	DESCRIPTION	REV
		Ref	**FIXED AXLE INSTALLATION**	
	0270969	Ref	**Fixed Axle (SN 0300065080 through 0300107511)**	E
	0274703	Ref	**Fixed Axle (SN 0300107512 through 0300123999)**	A
		Ref	**Note: USA Manufacture Only.**	
1	0100011	AR	Compound, Locking	
2		Ref	Bar, Stop Options:	
2	0362763	2	3/8in Bar **(SN 0300065080 through 0300107511)**	
2	0362763	4	3/8in Bar **(SN 0300107512 through 0300123999)**	
2	0362764	2	1/8in Bar **(SN 0300107512 through 0300123999)**	
3		Ref	Bolt 3/8in-16NC x 7/8in	
3	0641607	2	Hex HD Capscrew Gr5, 3/8-16 X 7/8 Lg **(SN 0300065080 through 0300069840)**	
3	See Note	2	Hex HD Capscrew Gr5, 3/8-16 X 7/8 Lg (See FRAME SHIELDS INSTALLATION for call out) **(SN 0300069841 through 0300123999)**	
4		Ref	Bolt Options:	
4	0641620	2	Bolt 3/8in-16NC x 2-1/4in	
4	0641616	2	Bolt 3/8in-16NC x 2in	
5	0642012	1	Bolt 5/8in-11NC x 1-1/2in	
6	0961950	2	Bushing, Garmax	
7	3422592	1	Pin, Axle Pivot	
8		Ref	Plate, Stop Options:	
8	3570901	2	Plate, Stop **(SN 0300065080 through 0300107511)**	
8	4220267	2	Plate, Stop **(SN 0300107512 through 0300123999)**	
9	3841258	1	Keeper, Pin	
10		Ref	Shield, Frame Options:	
10	4061020	1	Shield, Frame **(SN 0300065080 through 0300069840)**	
10	See Note	1	Shield, Frame (See FRAME SHIELDS INSTALLATION for call out) **(SN 0300069841 through 0300123999)**	
11		Ref	Shim Options:	
11	4070974	AR	Shim, 16ga **(SN 0300065080 through 0300107511)**	
11	4070973	AR	Shim, 11ga **(SN 0300107512 through 0300123999)**	
12	4740158	1	Thrustwasher	
13	4751600	2	Flatwasher 3/8in Regular	
14		Ref	Axle Weldment Options:	
14	4846353	1	Axle Weldment **(SN 0300065080 through 0300107511)**	
		Ref	**Note: If kingpin holes in the axle measure 1.503in diameter or larger in any direction, axle weldment must be replaced.**	
		Ref	**Note: See Kit Item 250 and additional notes at end of parts list before ordering parts.**	
14	0280199	1	Axle Weldment **(SN 0300107512 through 0300123999)**	
14A	0561300	2	Steer Cylinder Mounting Block Assembly	
15	2220235	3	Fitting, O-Ring (Not Shown)	
		Ref	**OSCILLATING AXLE INSTALLATIONS**	
	0270968	Ref	**USA Built Machines (SN 0300065080 through 0300077284)**	G
	0273488	Ref	**USA Built Machines (SN 0300077285 through 0300107511)**	C
	0274702	Ref	**USA Built Machines (SN 0300107512 through 0300123999)**	A
	0270968	Ref	**Belgium Built Machines (SN 1300000007 through 1300000004)**	A
	0272639	Ref	**Belgium Built Machines (SN 1300000005 through 1300000352)**	A
	0273498	Ref	**Belgium Built Machines (SN 1300000353 through 1300003221)**	C
	0274742	Ref	**Belgium Built Machines (SN 1300003222 through 1300006000)**	A

SECTION 1 - FRAME

ITEM	PART NUMBER	QTY	DESCRIPTION	REV
101	0100011	AR	Compound, Locking	
101	0100019	AR	Compound, Locking	
102	0100038	AR	Primer, Locking #7471	
103	0641416	4	Bolt 1/4in-20NC x 2in (USA Built Machines) **(SN 0300065080 through 0300077284)**	
103	0641416	4	Bolt 1/4in-20NC x 2in (Belgium Built Machines) **(Prior to SN 1300000353)**	
104	0641607	2	Bolt 3/8in-16NC x 3/4in (USA Built Machines) **(SN 0300065080 through 0300107511)**	
104	0641607	2	Bolt 3/8in16NC x 3/4in (Belgium Built Machines) **(Prior to SN 1300003222)**	
105		Ref	Bolt Options:	
105	0641812	2	1/2in-13NC x 1-1/2in (USA Built Machines) **(SN 0300065080 through 0300077284)**	
105	0642010	2	5/8in-11NC x 1-1/4in (Belgium Built Machines) **(Prior to SN 1300000353)**	
105	Not Required	0	Bolt (USA Built Machines) **(SN 0300077285 through 0300123999)**	
105	Not Required	0	Bolt (Belgium Built Machines) **(SN 1300000353 through 1300006000)**	
106	0642012	1	Bolt 5/8in-11NC x 1-1/2in	
107	0682248	2	Bolt 3/4in-10NC x 6in (USA Built Machines) **(SN 0300065080 through 0300107511)**	
107	0682248	2	Bolt 3/4in-10NC x 6in (Belgium Built Machines) **(Prior to SN 1300003222)**	
108	0961950	2	Bushing, Garmax	
109		Ref	Cam, Lockout Options:	
109	1100107	1	USA Built Machines **(SN 0300065080 through 0300069336)**	
109	1100133	1	USA Built Machines **(SN 0300069337 through 0300077284)**	
109	Not Required	0	USA Built Machines **(SN 0300077285 through 0300123999)**	
109	1100133	1	Cam, Lockout (Belgium built machines) **(SN 1300000001 through 1300000004)**	
109	1100134	1	Belgium Built Machines **(SN 1300000005 through 1300000352)**	
	Not Required	0	Cam, Lockout (Belgium Built Machines) **(SN 1300000353 through 1300006000)**	
110		Ref	Lockout Cylinder Assembly Options (See CYLINDER SECTION for Breakdown):	
110A	1684129	2	Lockout Cylinder (USA Built Machines) **(SN 0300065080 through 0300107511)**	
110A	1684243	2	Lockout Cylinder (Belgium Built Machines) **(Prior to SN 1300003222)**	
110B	1684465	2	Lockout Cylinder (USA Built Machines) **(SN 0300107512 through 0300123999)**	
110B	1684465	2	Lockout Cylinder (Belgium Built Machines) **(SN 1300003222 through 1300006000)**	
111	3272201	2	Nut 3/4in-10NC (USA Built Machines) **(SN 0300065080 through 0300107511)**	
111	3272201	2	Nut 3/4in-10NC (Belgium Built Machines) **(Prior to SN 1300003222)**	
112	3422592	1	Pin, Axle Pivot	
113	3422520	2	Pin (USA Built Machines) **(SN 0300065080 through 0300107511)**	
113	3422520	2	Pin (Belgium Built Machines) **(Prior to SN 1300003222)**	
114	3841258	1	Keeper, Pin	
115	3841520	2	Keeper, Pin (USA Built Machines) **(SN 0300065080 through**	

ITEM	PART NUMBER	QTY	DESCRIPTION	REV
			0300107511)	
115	3841520	2	Keeper, Pin (Belgium Built Machines) **(Prior to SN 1300003222)**	
116		Ref	Shield, Frame Options:	
116	4061020	1	Shield, Frame (USA Built Machines) **(SN 0300065080 through 0300069840)**	
116	See Note	1	Shield, Frame (USA Built Machines) (See FRAME SHIELDS INSTALLATION for call out) **(SN 0300069841 through 0300123999)**	
116	See Note	1	Shield, Frame (Belgium Built Machines) **(SN 1300000001 through 1300006000)**	
117	4567462	2	Tube, Mounting (USA Built Machines) **(SN 0300065080 through 0300107511)**	
117	4567462	2	Tube Mounting (Belgium Built Machines) **(Prior to SN 1300003222)**	
118		Ref	Lockout Valve Assembly Options:	
118	4640871	1	Valve Used USA Built Machines **(SN 0300065080 through 0300077284)**	
118	4640871	1	Value Used Belgium Built Machines **(Prior to SN 1300000353)**	
118	7012693	1	Seal Kit - 4640871 Valve	
118	7002840	1	Anti-Rotation Pin Removal Tool	
118	4641265	1	Valve (USA Built Machines) **(SN 0300077285 through 0300123999)**	
118	4641265	1	Value (Belgium Built Machines) **(SN 1300000353 through 1300006000)**	
119	4711400	4	Flatwasher 1/4in Thin (USA Built Machines) **(SN 0300065080 through 0300077284)**	
119	4711400	4	Flatwasher 1/4in Thin (Belgium Built Machines) **(Prior to SN 1300000353)**	
120	4740158	1	Thrustwasher	
122		Ref	Flatwasher Options:	
122	4751800	4	1/2in Regular (USA Built Machines) **(SN 0300065080 through 0300077284)**	
122	4752000	4	5/8in Regular (Belgium Built Machines) **(Prior to SN 1300000353)**	
122	Not Required	0	Flatwasher (USA Built Machines) **(SN 0300077285 through 0300123999)**	
122	Not Required	0	Flatwasher (Belgium Built Machines) **(SN 1300000353 through 1300006000)**	
123		Ref	Axle Weldment Options:	
		Ref	**Note: If kingpin holes in the axle measure 1.503in diameter or larger in any direction, axle weldment must be replaced. Note: See Kit Item 250 and additional notes at end of parts list before ordering parts.**	
123	4846353	1	Axle Weldment (USA Built Machines) **(SN 0300065080 through 0300107511)**	
123	0280199	1	Axle Weldment (USA Built Machines) **(SN 0300107512 through 0300123999)**	
123	4846725	1	Axle Weldment (Belgium Built Machines) **(Prior to SN 1300003222)**	
123	0280202	1	Axle Weldment (Belgium Built Machines) **(SN 1300003222 through 1300006000)**	
123A		Ref	Steer Cylinder Mounting Block Assembly Options:	
123A	0561300	2	Steer Cylinder Mounting Block (USA Built Machines)	
123A	0561511	2	Steer Cylinder Mounting Block (Belgium Built Machines)	
124	4892200	4	Flatwasher 3/4in Hardened (USA Built Machines) **(SN 0300065080 through 0300107511)**	

SECTION 1 - FRAME

ITEM	PART NUMBER	QTY	DESCRIPTION	REV
124	4892200	4	Flatwasher 3/4in Hardened (Belgium Built Machines) **(Prior to SN 1300003222)**	
125	3311405	4	Locknut 1/4in-20NC (USA Built Machines) **(SN 0300065080 through 0300077284)**	
125	3311405	4	Locknut 1/4in-20NC (Belgium Built Machines) **(Prior to SN 1300000353)**	
126	0791506	4	Screw, 5/16in-18NC x 3/4in (USA Built Machines) **(SN 0300077285 through 0300123999)**	
126	0791506	4	Screw, 5/16in-18NC x 3/4in (Belgium Built Machines) **(SN 1300000353 through 1300006000)**	
127	0641814	8	Bolt 1/2in-13NC x 1-3/4in (USA Built Machines) **(SN 0300107512 through 0300123999)**	
127	0641814	8	Bolt 1/2in-13NC x 1-3/4in (Belgium Built Machines) **(SN 1300003222 through 1300006000)**	
128	4891800	8	Flatwasher, 1/2in Hardened (USA Built Machines) **(SN 0300107512 through 0300123999)**	
128	4891800	8	Flatwasher, 1/2in Hardened (Belgium Built Machines) **(SN 1300003222 through 1300006000)**	
		Ref	**STEERING INSTALLATIONS**	
	0271011	Ref	**Manufactured in USA (SN 1st digit is 0)**	I
	0272652	Ref	**Manufactured in Belgium (SN 1st digit is 1)**	F
201	0100011	AR	Compound, Locking	
202		Ref	Thrustwasher Options:	
202		Ref	USA Built Machines:	
202	0440161	AR	Thrustwasher (Top and Bottom Kingpin Location) **(SN 0300065080 through 0300079125)**	
		Ref	**(Note: See Kit Item 250 and additional notes at end of parts list before ordering parts.)**	
202	4740537	AR	Thrustwasher (.0625) (Top Kingpin Location) **(SN 0300079126 through 0300123999)**	
202	4740538	AR	Thrustwasher (.125) (Top Kingpin Location) **(SN 0300079126 through 0300123999)**	
202	4740539	AR	Thrustwasher (.188) (Top Kingpin Location) **(SN 0300079126 through 0300123999)**	
202	4740540	AR	Thrustwasher (.250) (Top Kingpin Location) **(SN 0300079126 through 0300123999)**	
202	0440271	AR	Thrustwasher (Bottom Kingpin Location) **(SN 0300079126 through 0300123999)**	
202		Ref	Belgium Built Machines:	
202	0440161	AR	Thrustwasher (Top and Bottom Kingpin Location) **(Prior to SN 1300000441)**	
		Ref	**(Note: See Kit Item 250 and additional notes at end of parts list before ordering parts.)**	
202	4740537	AR	Thrustwasher (.0625) (Top Kingpin Location) **(SN 1300000441 through 1300006000)**	
202	4740538	AR	Thrustwasher (.125) (Top Kingpin Location) **(SN 1300000441 through 1300006000)**	
202	4740539	AR	Thrustwasher (.188) (Top Kingpin Location) **(SN 1300000441 through 1300006000)**	
202	4740540	1	Thrustwasher (.250) (Top Kingpin Location) **(SN 1300000441 through 1300006000)**	
202	0440271	AR	Thrustwasher (Bottom Kingpin Location) **(SN 1300000441 through 1300006000)**	
203	0641606	16	Bolt 3/8in-16NC x 3/4in	
204	0641826	4	1/2in-13NC x 3-1/4in	
205		Ref	Bushing / Bearing Options:	

ITEM	PART NUMBER	QTY	DESCRIPTION	REV
205	0961951	2	Bushing (USA Built Machines) (Top and Bottom Kingpin Location) **(SN 0300065080 through 0300079125)**	
205	0961951	2	Bushing (Belgium Built Machines) (Top and Bottom Kingpin Location) **(Prior to SN 1300000441)**	
		Ref	**(Note: See Kit Item 250 and additional notes at end of parts list before ordering parts)**	
205	0440291	2	Bushing (USA Built Machines) (Top Kingpin Location) **(SN 0300079126 through 0300123999)**	
205	0440291	2	Bushing (Belgium Built Machines) (Top Kingpin Location) **(SN 1300000441 through 1300006000)**	
205	0440274	2	Bushing (USA Built Machines) (Bottom Kingpin Location) **(SN 0300079126 through 0300123999)**	
205	0440274	2	Bushing (Belgium Built Machines) (Bottom Kingpin Location) **(SN 1300000441 through 1300006000)**	
206	0962140	2	Bearing, Garmax	
207		Ref	Steer Cylinder Assembly Options (See CYLINDER SECTION for Breakdown):	
207	1683614	NLA	Steer Cylinder Assembly (USA Built Machine) (Use p/n 1684412) **(SN 0300065080 through 0300087391)**	
207	1684412	1	Steer Cylinder Assembly (USA Built Machine) **(SN 0300087392 through 0300123999)**	
207	1684246	1	Steer Cylinder Assembly (Belgium Built Machines)	
208	3312008	4	Nut 5/8in-11NC	
209	3322201	2	Nut 3/4in-16NC	
210		Ref	Kingpin Options:	
210	3422716	4	Kingpin (USA Built Machines) (2 Bolt Mounting) (Note: See kit Item 250 and additional notes at end of parts list before ordering parts) **(SN 0300065080 through 0300079125)**	
210	3422716	4	Kingpin (Belgium Built Machines) (2 Bolt Mounting) (Note: See kit Item 250 and additional notes at end of parts list before ordering parts) **(Prior to SN 1300000441)**	
210	3423081	4	Kingpin (USA Built Machines) (4 Bolt Mounting) **(SN 0300079126 through 0300123999)**	
210	3423081	4	Kingpin (Belgium Built Machines) (4 Bolt Mounting) **(SN 1300000441 through 1300006000)**	
211		Ref	Rod-End with Grease Fitting Options:	
211	3841517	2	Rod-End (USA Built Machines)	
211	3841367	2	Rod-End (Belgium Built Machines) **(Prior to SN 130005313)**	
211	3841517	2	Rod-End **(SN 130005313 through 1300006000)**	
212	3900109	4	Screw, Shoulder	
213	4060950	1	Shield, Frame (Used on USA Built Machines Only) **(SN 0300065080 through 0300074064)**	
214		Ref	Spindle (Left Side) Options:	
214	4130363	1	Spindle (Left Side) (USA Built Machines) **(SN 0300065080 through 0300079125)**	
214	4130405	1	Spindle (Left Side) (USA Built Machines) **(SN 0300079126 through 0300123999)**	
214	4130391	1	Spindle (Left Side) (Belgium Built Machines) **(Prior to SN 1300000441)**	
214	4130406	1	Spindle (Left Side) (Belgium Built Machines) **(SN 1300000441 through 1300006000)**	
215		Ref	Spindle (Right Side) Options:	
215	4130364	1	Spindle (Right Side) (USA Built Machines) **(SN 0300065080 through 0300079125)**	
215	4130406	1	Spindle (Right Side) (USA Built Machines) **(SN 0300079126 through 0300123999)**	

SECTION 1 - FRAME

ITEM	PART NUMBER	QTY	DESCRIPTION	REV
215	4130392	1	Spindle (Right Side) (Belgium Built Machines) **(Prior to SN 1300000441)**	
215	4130407	1	Spindle (Right Side) (Belgium Built Machines) **(SN 1300000441 through 1300006000)**	
216	4740086	4	Thrustwasher	
217	4751800	4	Flatwasher 1/2in Regular	
218		Ref	Tie-Rod Options:	
218	4845711	2	Tie-Rod (USA Built Machines)	
218	4846733	2	Tie-Rod (Belgium Built Machines)	
222	3780182	2	O-Ring (USA Built Machines) **(SN 0300079126 through 0300123999)**	
222	3780182	2	O-Ring (Belgium Built Machines) **(SN 1300000441 through 1300006000)**	
223	3020029	AR	Grease, Bearing (Not Shown)	
250	2902400	1	Kingpin and Bushings Update Kit for Machines Built (Includes Design Items 202, 205, 210 & 222). Refer to Field Service Bulletin AWP-04-11. **(SN 0300065080 through 0300079125, SN 1300000441 through 0300124000)**	
		Ref	**Note: Newer bushings will fit in and "SN 0300065080 through 0300079125 & SN 1300000441" axles however if kingpin holes measure 1.503in diameter or larger in any direction, axle weldment must be replaced before installation of kit.**	
		Ref	**Note: Spindles require drilling and tapping for 8 additional kingpin mounting bolts. Newer design kingpins require 4 mounting bolts each.**	

FIGURE 1-4. TIRE AND WHEEL DRIVE INSTALLATIONS

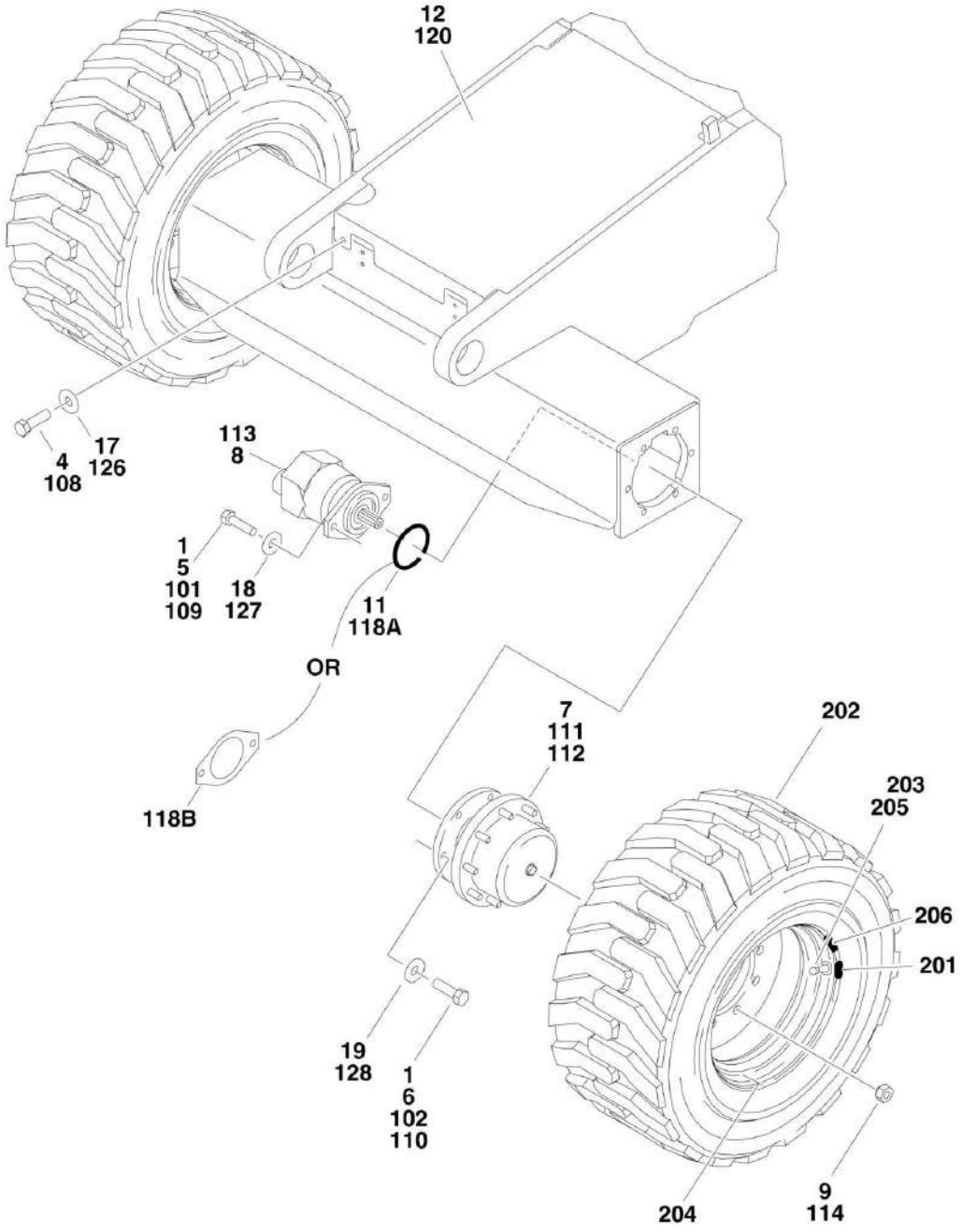

FIGURE 1-4. TIRE AND WHEEL DRIVE INSTALLATIONS

ITEM	PART NUMBER	QTY	DESCRIPTION	REV
		Ref	**WHEEL DRIVE INSTALLATION (2WD)**	
	0270870	Ref	**Caterpillar/Deutz/ Ford Engine Machines (SN 0300065080 through 0300071526)**	E
	0272907	Ref	**Caterpillar/Deutz/ Ford Engine Machines (SN 0300071527 through 0300100513)**	C
	0275470	Ref	**Caterpillar/Deutz/ Ford Engine Machines (SN 0300100514 through 0300107511)**	D
	0275470	Ref	**GM Engine Machines (SN 0300065080 through 0300107511)**	D
	0275853	Ref	**Caterpillar/Deutz/ Ford/GM/Perkins Engine Machines (SN 0300107512 through 0300123999)**	B
		Ref	**Note: USA Manufacture Only.**	
1	0100011	AR	Compound, Locking	
1	0100019	AR	Compound, Locking	
4		Ref	Bolt 3/8in-16NC x 7/8in	
4	0641607	2	Hex HD Capscrew Gr5, 3/8-16 X 7/8 Lg **(SN 0300065080 through 0300069840)**	
4	See Note	2	Hex HD Capscrew Gr5, 3/8-16 X 7/8 Lg (See FRAME SHIELDS INSTALLATION for call out) **(SN 0300069841 through 0300123999)**	
5		Ref	Hardware Options:	
5	0681810	4	Bolt 1/2in-13NC x 1-1/4in (Grade 8) **(SN 0300065080 through 0300071526)**	
5	3311801	4	Nut 1/2in-13NC (Not Shown) **(SN 0300071527 through 0300123999)**	
6	0682014	12	Bolt 5/8in-11NC x 1-3/4in (Grade 8)	
7		Ref	Drive Hub/Brake Assembly Options:	
7	2780256	NLA	Drive Hub/Brake Assembly (See DRIVEHUB/BRAKE ASSEMBLY(REAR) For Breakdown) (Use p/n 1001178138) **(SN 0300065080 through 0300071526)**	
7	2780267	2	Drive Hub/Brake Assembly (See DRIVE HUB/BRAKE ASSEMBLY (REAR) for Breakdown) **(SN 0300071527 through 0300123999)**	
8		Ref	DRIVE MOTOR ASSEMBLY OPTIONS:	
8	3160158	2	Caterpillar/Deutz/Ford Engine Machines (See DRIVE MOTOR ASSEMBLY (2WD) for Breakdown) **(SN 0300065080 through 0300100513)**	
8	3160351	2	Caterpillar/Deutz/Ford Engine Machines (See DRIVE MOTOR ASSEMBLY (2WD) For Breakdown) **(SN 0300100514 through 0300123999)**	
8	3160298	2	GM Engine Machines (See DRIVE MOTOR ASSEMBLY (2WD) for Breakdown) **(SN 0300065080 through 0300099084)**	
8	3160351	2	GM Engine Machines (See DRIVE MOTOR ASSEMBLY (2WD) for Breakdown) **(SN 0300099085 through 0300123999)**	
9	3300106	18	Lugnut	
11	3790045	2	O-Ring **(SN 0300065080 through 0300075079)**	
12		Ref	Shield, Frame Options:	
12	4061021	1	Shield, Frame Cover Rear **(SN 0300065080 through 0300077284)**	
12	See Note	1	Shield, Frame Cover Rear (See FRAME SHIELDS INSTALLATION for call out) **(SN 0300077285 through 0300123999)**	
17	4751600	2	Flatwasher 3/8in Regular	
18	4891800	4	Flatwasher 1/2in Hardened	
19	4892000	12	Flatwasher 5/8in Hardened	

SECTION 1 - FRAME

ITEM	PART NUMBER	QTY	DESCRIPTION	REV
		Ref	**WHEEL DRIVE INSTALLATIONS (4WD)**	
	0270871	Ref	**Wheel Drive (USA Built Machines) (SN 0300065080 through 0300069154)**	F
	0272320	Ref	**Wheel Drive (USA Built Machines) (SN 0300069155 through 0300071526)**	C
	0272895	Ref	**Wheel Drive (USA Built Machines) (SN 0300071527 through 0300107511)**	G
	0275854	Ref	**Wheel Drive (USA Built Machines) (SN 0300107512 through 0300123999)**	B
	0272320	1	**Wheel Drive (Belgium built machines) (SN 1300000001 through 1300000161)**	C
	0272895	Ref	**Wheel Drive (Belgium Built Machines) (SN 1300000162 through 1300003221)**	G
	0275854	Ref	**Wheel Drive (Belgium Built machines) (SN 1300003222 through 1300006000)**	B
101	0100011	AR	Compound, Locking	
102	0100019	AR	Compound, Locking	
108		Ref	Bolt Options:	
108	0641607	2	Bolt (USA Built Machines) **(SN 0300065080 through 0300069840)**	
108	See Note	2	Bolt (USA Built Machines) (See FRAME SHIELDS INSTALLATION for call out) **(SN 0300069841 through 0300123999)**	
108	See Note	2	Bolt (Built Machines) (See FRAME SHIELDS INSTALLATION for call out)	
109		Ref	Hardware Options:	
109		Ref	USA Built Machines:	
109	0681810	8	Bolt 1/2in-13NC x 1-1/4in (Grade 8) **(SN 0300065080 through 0300071526)**	
109	0681810	4	Bolt 1/2in-13NC x 1-1/4in (Grade 8) (Front Axle) **(SN 0300071527 through 0300123999)**	
109	3311801	4	Nut 1/2in-13NC (Not Shown) (Rear Axle) **(SN 0300071527 through 0300123999)**	
109		Ref	Belgium Built Machines:	
109	0681810	4	Bolt 1/2in-13NC x 1-1/4in (Grade 8) (Front Axle) **(SN 1300000001 through 1300006000)**	
109	3311801	4	Nut 1/2in-13NC (Not Shown) (Rear Axle) **(SN 1300000001 through 1300006000)**	
110	0682014	24	Bolt 5/8in-11NC x 1-3/4in (Grade 8)	
111		Ref	Drive Hub/Brake Assembly (Rear) Options:	
111	2780256	NLA	Drive Hub/Brake (USA Built Machines) (See DRIVE HUB/BRAKE ASSEMBLY(REAR) for Breakdown) (Use p/n 1001178138) **(SN 0300065080 through 0300071526)**	
111	2780267	2	Drive Hub/Brake (USA Built Machines) (See DRIVE HUB/BRAKE ASSEMBLY(REAR) for Breakdown) **(SN 0300071527 through 0300123999)**	
111	2780256	NLA	Drive Hub/Brake (Belgium Built Machines) (See DRIVE HUB/BRAKE ASSEMBLY(REAR) for Breakdown) (Use p/n 1001178138) **(SN 1300000001 through 1300000161)**	
111	2780267	1	Drive Hub/Brake Assembly (Belgium Built Machines) (See DRIVE HUB/BRAKE ASSEMBLY(REAR) for Breakdown) **(SN 1300000162 through 1300006000)**	
112		Ref	Drive Hub Assembly (Front - Not Shown) Options:	
112	2780257	NLA	Drive Hub Assembly (USA Built Machines) (See DRIVE HUB/BRAKE ASSEMBLY(FRONT) (4WD ONLY) for Breakdown) (Use p/n 1001178136) **(SN 0300065080 through 0300071526)**	

ITEM	PART NUMBER	QTY	DESCRIPTION	REV
112	2780268	2	Drive Hub Assembly (USA Built Machines) (See DRIVE HUB/BRAKE ASSEMBLY(FRONT) (4WD ONLY) for Breakdown) **(SN 0300071527 through 0300123999)**	
112	2780257	NLA	Drive Hub Assembly (Belgium Built Machines) (See DRIVE HUB/BRAKE ASSEMBLY(FRONT) (4WD ONLY) for Breakdown) (Use p/n 1001178136) **(SN 1300000001 through 1300000161)**	
112	2780268	1	Drive Hub Assembly (Belgium Built Machines) (See DRIVE HUB/BRAKE ASSEMBLY(FRONT) (4WD ONLY) for Breakdown) **(SN 1300000162 through 1300006000)**	
113		Ref	DRIVE MOTOR ASSEMBLY OPTIONS:	
113	3160260	4	Drive Motor Assembly (USA Built Machines) (See DRIVE MOTOR ASSEMBLY (4WD) for Breakdown) **(SN 0300065080 through 0300069154)**	
113	3160266	4	Drive Motor Assembly (USA Built Machines) (See DRIVE MOTOR ASSEMBLY (4WD) for Breakdown) **(SN 0300069155 through 0300098502)**	
113	3160348	4	Drive Motor Assembly (USA Built Machines) (See DRIVE MOTOR ASSEMBLY (4WD) for Breakdown) **(SN 0300098503 through 0300123999)**	
113	3160266	4	Drive Motor Assembly (Belgium Built Machines) (See DRIVE MOTOR ASSEMBLY (4WD) for Breakdown) **(Prior to SN 1300002248)**	
113	3160348	4	Drive Motor Assembly (Belgium Built Machines) (See DRIVE MOTOR ASSEMBLY (4WD) for Breakdown) **(SN 1300002248 through 1300006000)**	
114	3300106	36	Lugnut	
118		Ref	Seal Options:	
118A	3790045	2	O-Ring (USA Built Machines) **(SN 0300065080 through 0300103381)**	
118A	3790045	2	O-Ring (Belgium Built Machines) **(Prior to SN 1300003636)**	
118B	3960526	4	Gasket (USA Built Machines) **(SN 0300103382 through 0300123999)**	
118B	3960526	4	Gasket (Belgium Built Machines) **(SN 1300003637 through 1300006000)**	
120		Ref	Shield, Frame	
120	4061021	1	Shield, Frame (USA Built Machines) **(SN 0300065080 through 0300069840)**	
120	See Note	1	Shield, Frame (USA Built Machines) (See FRAME SHIELDS INSTALLATION for call out) **(SN 0300069841 through 0300123999)**	
120	See Note	1	Shield, Frame (Belgium Built Machines) (See FRAME SHIELDS INSTALLATION for call out)	
126	4751600	6	Flatwasher 3/8in Regular	
127	4891800	8	Flatwasher 1/2in Hardened	
128	4892000	24	Flatwasher 5/8in Hardened	
131	2300016	AR	Fluid, Hydraulic (Not Shown)	
132	3020008	AR	Lubricant, Mobilube HD 80W - 90 (Not Shown)	
		Ref	**TIRE AND WHEEL INSTALLATIONS**	
	0258028	Ref	**12 x 16.5 Pneumatic (Available on ANSI, ANSI Export AND Japanese Specs)**	A
	0272299	Ref	**12 x 16.5 Pneumatic TS (Available on ANSI Specs)**	1
	0258030	Ref	**12 x 16.5 Foam-Filled (Available on all Specs)**	A
	0270671	Ref	**12 x 16.5 Pneumatic Non-Marking (Available on ANSI, ANSI Export and Japanese Specs)**	B
	0270674	Ref	**12 x 16.5 Foam-Filled Non-Marking (Available on All Specs)**	B
	0258029	Ref	**33/1550 x 16.5 Pneumatic (Available on ANSI, ANSI Export**	B

SECTION 1 - FRAME

ITEM	PART NUMBER	QTY	DESCRIPTION	REV
			AND Japanese Specs)	
	0272300	Ref	**33/1550 x 16.5 Pneumatic TS (Available on ANSI Specs)**	1
	0258031	Ref	**33/1550 x 16.5 Foam-Filled (Available on All Specs)**	B
	0258831	Ref	**33/16LL x 16.1 Pneumatic (Available on ANSI, ANSI Export and Japanese Specs) (Requires special counterweighting)**	A
	0259129	Ref	**33/16LL x 16.1 Foam-Filled (Available on All Specs) (Requires special counterweighting)**	A
	0257740	2	12 x 16.5 Pneumatic Right Side	C
	0272357	2	12 x 16.5 Pneumatic TS Right Side	A
	0257746	2	12 x 16.5 Pneumatic Left Side	C
	0272356	2	12 x 16.5 Pneumatic TS Left Side	A
	0258009	2	12 x 16.5 Foam-Filled Right Side	C
	0258010	2	12 x 16.5 Foam-Filled Left Side	C
	0270672	2	12 x 16.5 Pneumatic Non-Marking Right Side	A
	0270673	2	12 x 16.5 Pneumatic Non-Marking Left Side	A
	0270675	2	12 x 16.5 Foam-Filled Non-Marking Right Side	A
	0270676	2	12 x 16.5 Foam-Filled Non-Marking Left Side	A
	0257755	2	33/1550 x 16.5 Pneumatic Right Side	C
	0272360	2	33/1550 x 16.5 Pneumatic TS Right Side	A
	0257756	2	33/1550 x 16.5 Pneumatic Left Side	C
	0272361	2	33/1550 x 16.5 Pneumatic TS Left Side	A
	0258011	2	33/1550 x 16.5 Foam-Filled Right Side	D
	0258012	2	33/1550 x 16.5 Foam-Filled Left Side	D
	0258830	4	33/16LL x 16.1 Pneumatic (Requires special counterweighting)	
	0259128	4	33/16LL x 16.1 Foam-Filled (Requires special counterweighting)	
		Ref	**Note: Assemblies may require ballast/foam filling to manufacture's specifications prior to installing on a machine. Refer to Operation and Safety or Service and Maintenance Manuals. Purchase individual tire and/or rim only if able to foam fill tire and wheel assembly, otherwise, purchase complete assembly.**	
201		Ref	Decal Options (Pneumatic Only):	
201	1702740	1	Decal - 90PSI	
201	1703067	1	Decal - 40PSI	
202		Ref	Tire Options:	
202	4520216	1	Tire, 12 x 16.5 NHS (OTR Brand)	
202	4520240	1	Tire, 12 x 16.5 Non-Marking	
202	4520217	1	Tire, 33/1550 x 16.5 NHS (OTR Brand)	
202	4520212	1	Tire, 33/16LL x 16.1	
203		Ref	Valve Stem Options:, Air (Pneumatic Only)	
203	4640113	1	Valve Stem (All except 33/1550 x 16.5 Foam-Filled Tire and Wheel Assy)	
203	8786514	1	Valve Stem (33/1550 x 16.5 Foam-Filled Tire and Wheel Assy Only)	
204		Ref	Rim, Wheel Options:	
204	4860178	1	Rim, Wheel, 16.5 x 12 (Use with 12 x 16.5 Tires)	
204	4860179	1	Rim, Wheel, 16.5 x 12 (Use with 33/1550 x 16.5 Tires)	
204	4860193	1	Rim, Wheel, 16.1 x 14 (Use with 33/16LL x 16.1 Tires)	
205	1120552	1	Cap, Valve Stem (TS Tire Only)	
206	1705364	1	Decal - Tire Sealant (TS Tire Only)	

FIGURE 1-5. FRAME SHIELDS INSTALLATION (SN 0300069841 through 0300123999, SN 13000000001 through 1300006000)

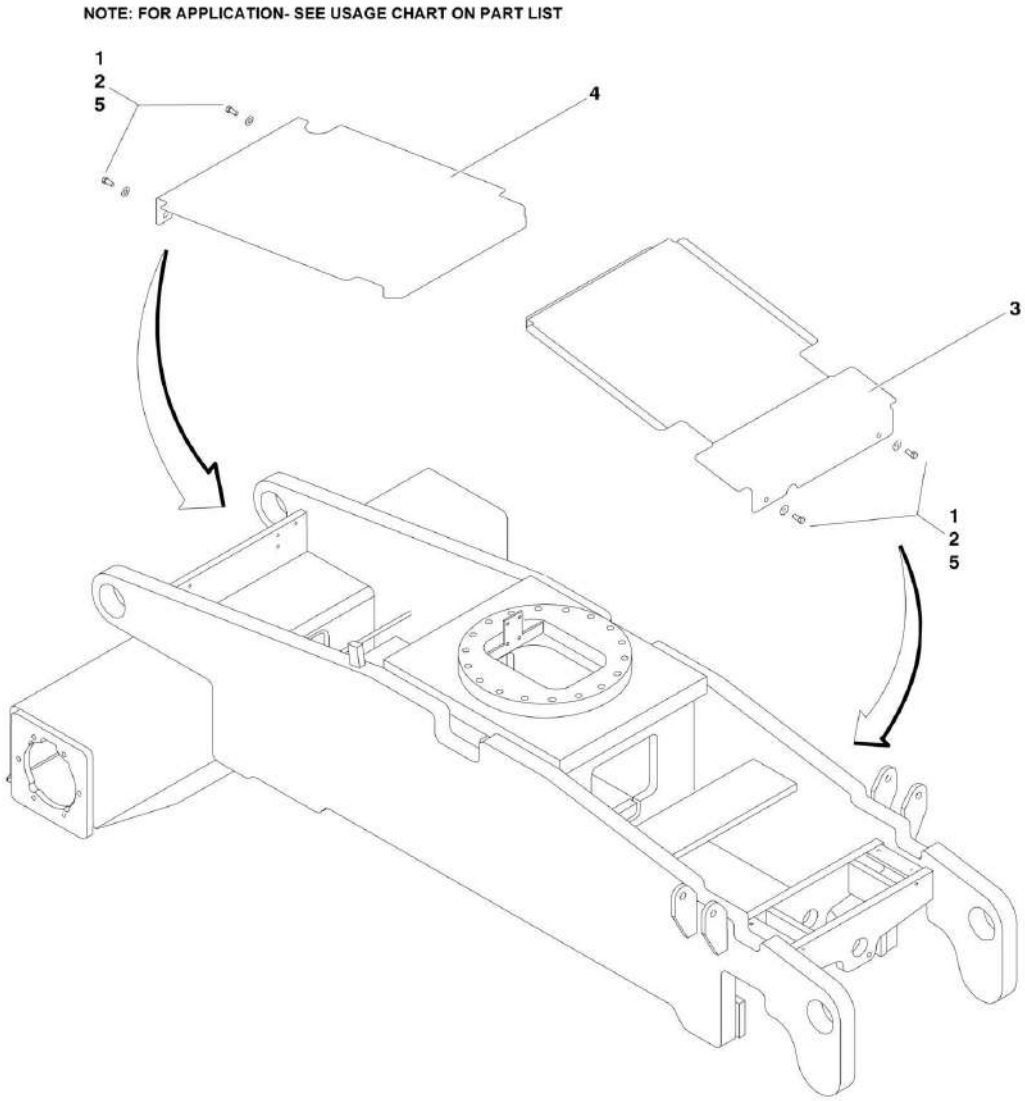

FIGURE 1-5. FRAME SHIELDS INSTALLATION (SN 0300069841 through 0300123999, SN 13000000001 through 1300006000)

ITEM	PART NUMBER	QTY	DESCRIPTION	REV
		Ref	**USAGE CHART:**	
		Ref	**Use this figure only for:**	
		Ref	**Machines with and Machines. (SN 0300065080 through 0300069841, SN 1300000001 through 1300006000)**	
		Ref	**For Machines refer to Axle Installation (Front Shield) or Wheel Drive Installation (Rear Shield). (SN 0300065080 through 0300069841)**	
		Ref	**FRAME SHIELDS INSTALLATION**	
	0272660	Ref	**Frame Shields (USA Built Machines) (SN 0300069841 through 0300077284)**	B
	0273500	Ref	**Frame Shields (USA Built Machines) (SN 0300077285 through 0300107511)**	B
	0274688	Ref	**Frame Shields (USA Built Machines) (SN 0300107512 through 0300123999)**	A
	0272660	Ref	**Frame Shields (Belgium Built Machines) (SN 1300000353 through 1300006000)**	B
	0273500	Ref	**Frame Shields (Belgium Built Machines) (SN 1300000353 through 1300003221)**	B
	0274688	Ref	**Frame Shields (Belgium Built Machines) (SN 1300003222 through 1300006000)**	A
1	0100011	AR	Compound, Locking	
2	0641607	4	Bolt 3/8in-16NC x 7/8in	
3		Ref	Cover (Front) Options:	
3	4061020	1	Cover (Front) (USA Built Machines) **(SN 0300069841 through 0300077284)**	
3	3380505	1	Cover (Front) (USA Built Machines) **(SN 0300077285 through 0300107511)**	
3	3380610	1	Cover (Front) (USA Built Machines) **(SN 0300107512 through 0300123999)**	
3	4061020	1	Cover (Front) (Belgium Built Machines) **(Prior to SN 1300000352)**	
3	3380505	1	Cover (Front) (Belgium Built Machines) **(SN 1300000353 through 1300003221)**	
3	3380610	1	Cover (Front) (Belgium Built Machines) **(SN 1300003222 through 1300006000)**	
4	4061021	1	Shield, Frame Cover Rear	
5	4751600	4	Flatwasher 3/8in Regular	

FIGURE 1-6. DRIVE HUB/BRAKE ASSEMBLY (REAR)

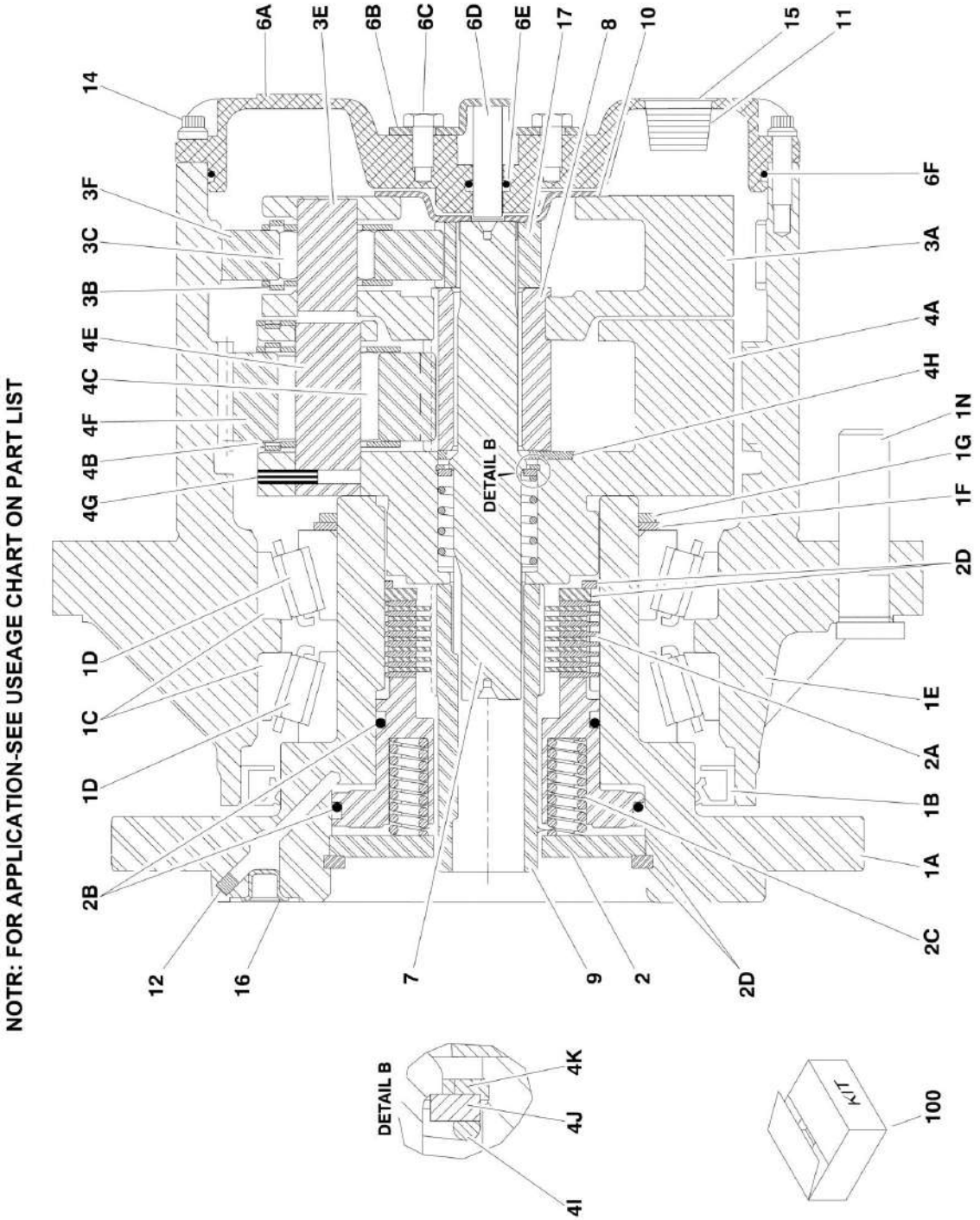

FIGURE 1-6. DRIVE HUB/BRAKE ASSEMBLY (REAR)

ITEM	PART NUMBER	QTY	DESCRIPTION	REV
		Ref	**USAGE CHART:**	
		Ref	**Machines (SN 0300065080 through 0300071527, SN 1300000001 through 1300000162)**	
		Ref	**NOTE: Hub may have been replaced with Service kit p/n 1001178138 (Kit uses hub p/n 2780267). See next figure for service parts.**	
	2780256	Ref	**DRIVE HUB/BRAKE ASSEMBLY**	G
1	See Note	1	Spindle/Housing Assembly (Note: Not Available - Purchase Individual Components)	
1A	7024105	1	Spindle	
1B	7024113	1	Seal	
1C	7007006	2	Cone, Bearing	
1D	7024112	2	Cup, Bearing	
1E	7024110	1	Housing/Ring Gear	
1F	7024109	1	Thrustwasher	
1G	7024107	1	Ring, Retaining	
1N	7024111	9	Stud, Wheel	
2	7024106	1	Brake, Input	
2A	7024710	1	Kit, Brake Lining (Includes Qty 8 Outer Plates and Qty 7 Inner Plates)	
2B	7024709	1	Kit, Brake O-Ring (Includes Qty 2 O-Rings and Back-up Rings)	
2C	7024711	1	Kit, Brake Spring (Includes Qty 12 Springs)	
2D	7024719	1	Kit, Brake Hardware (Includes End Plate, Spacer and Qty 2 E-Clips)	
3	See Note	1	Carrier Assembly (Note: Not Available - Purchase Individual Components)	
3A	7024116	1	Carrier	
3B	7024127	6	Thrustwasher	
3C	7024123	42	Bearing, Needle	
3E	7024120	3	Shaft, Planet	
3F	7024118	3	Gear, Planet	
4	See Note	1	Carrier Assembly (Note: Not Available - Purchase Individual Components)	
4A	7024117	1	Carrier	
4B	7024126	6	Thrustwasher	
4C	7024122	45	Bearing, Needle	
4E	7024121	3	Shaft, Planet	
4F	7024119	3	Gear, Planet	
4G	7001913	3	Rollpin	
4H	7024128	1	Thrustwasher	
4I	7024124	1	Spring	
4J	7024129	1	Thrustwasher	
4K	7024125	1	Thrustwasher	
6	See Note	1	Cover Assembly (Note: Not Available - Purchase Individual Components)	
6A	7024132	1	Plate, Cover	
6B	7017093	1	Cap, Disengage	
6C	0641404	2	Bolt 1/2in-20NC x 1/2in	
6D	7017092	1	Pin, Dowel	
6E	7017095	1	O-Ring	
6F	7024134	1	O-Ring	
7	7024130	1	Shaft, Input	

SECTION 1 - FRAME

ITEM	PART NUMBER	QTY	DESCRIPTION	REV
8	7024115	1	Gear, Sun	
9	7024131	1	Coupling	
10	7017097	1	Spacer, Thrust	
11	7017094	2	Plug, Pipe	
12	7024108	1	Plug, Pressure	
14	7024133	12	Bolt 1/4in-20NC x 7/8in (Grade 8)	
15	See Note	1	Plate, ID (Not Shown) (Note: Not available for purchase)	
16	7017082	1	Plug, O-Ring	
17	7024114	1	Gear, Sun	
100	7024198	1	Seal Kit (Includes Items 1B, 1G & 6F)	

FIGURE 1-7. DRIVE HUB/BRAKE ASSEMBLY

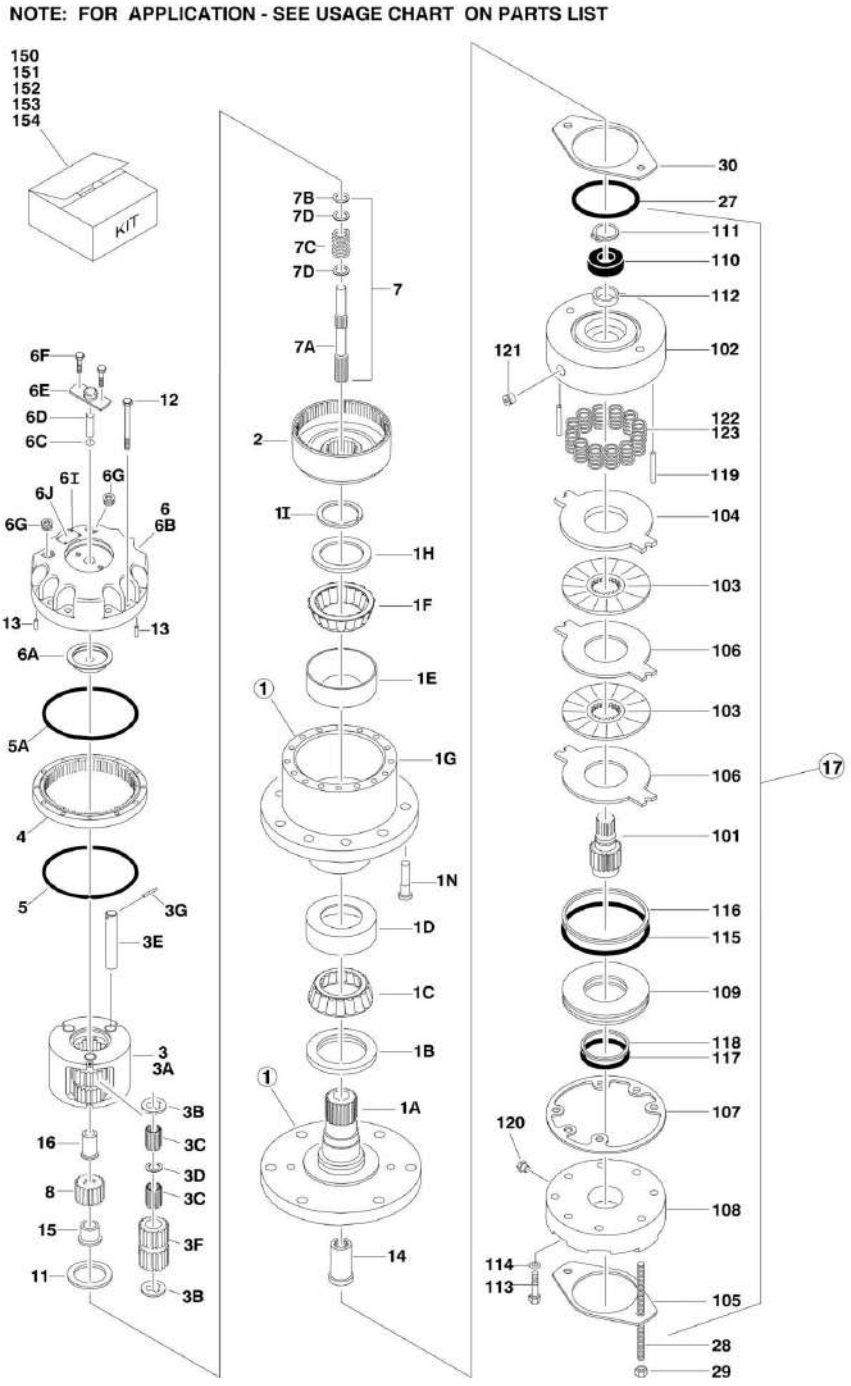

FIGURE 1-7. DRIVE HUB/BRAKE ASSEMBLY

ITEM	PART NUMBER	QTY	DESCRIPTION	REV
		Ref	**USAGE CHART:**	
		Ref	**Machines (SN 0300071527 through 0300123999, SN 1300000162 through 1300006000)**	
	2780267	Ref	**DRIVE HUB/BRAKE ASSEMBLY**	D
1	See Note	1	Spindle/Housing Assembly (Note: Not Available - Purchase Individual Components)	
1A	7017059	1	Spindle	
1B	7001998	1	Seal	
1C	7010429	1	Cone, Bearing (Includes Item 1D)	
1D	7010429	1	Cup, Bearing (Includes Item 1C)	
1E	7000257	1	Cup, Bearing	
1F	7000258	1	Cone, Bearing	
1G	7007601	1	Housing/Ring Gear	
1H	7000232	1	Thrustwasher	
1I	7000229	1	Ring, Retaining	
1N	7007640	9	Stud, Wheel	
2	7000246	1	Gear, Internal	
3	7024712	1	Carrier Assembly	
3A	7024712	1	Carrier	
3B	7024712	6	Ring, Retaining	
3C	7024712	AR	Bearing, Needle	
3D	7024712	3	Thrustwasher	
3E	7024712	3	Shaft, Planet	
3F	7024712	3	Gear, Planet	
3G	7024712	3	Rollpin	
4	7000248	1	Ring Gear	
5	7000230	1	O-Ring	
5A	7017070	1	O-Ring	
6	70001349	1	Cover Assembly (was p/n 7017090)	
6A	70001349	1	Spacer, Thrust (was p/n 7017097)	
6B	70001349	1	Plate, Cover (was p/n 7017091)	
6C	70001349	1	O-Ring (was p/n 7017095)	
6D	70001349	1	Rod, Disconnect (was p/n 7017092)	
6E	70001349	1	Cap, Disengage (was p/n 7017093)	
6F	70001349	2	Bolt (was p/n 0641404)	
6G	7017094	1	Plug, Pipe	
6I	See Note	4	Rivet (Note: Not Available - Purchase Locally)	
6J	See Note	1	Plate, ID (Note: Not available for purchase)	
7		Ref	Input Shaft Assembly	
7A	7024714	1	Shaft	
7B	7000261	1	Ring, Retaining	
7C	7000262	1	Spring	
7D	7000263	2	Spacer, Thrust	
8	7024713	1	Gear, Sun	
11	7000253	1	Thrustwasher	
12	7017067	12	Bolt	
13	7017080	4	Pin, Dowell	
14	7000206	1	Coupling	
15	7024715	1	Spacer, Input	
16	7024716	1	Spacer, Input	

SECTION 1 - FRAME

ITEM	PART NUMBER	QTY	DESCRIPTION	REV
17	7024182	1	Brake Assembly (See Items 101-154 for Breakdown)	
27	7024705	1	O-Ring	
28	7024717	2	Rod, Threaded	
29	7024718	2	Nut 1/2in-13NC	
30	70005483	1	Gasket (USA Built Machines) **(SN 0300092784 through 0300123999)**	
30	70005483	1	Gasket (Belgium Built Machines) **(SN 1300001443 through 1300006000)**	
	7024182	Ref	**BRAKE ASSEMBLY**	
101	7024189	1	Shaft	
102	7024182	1	Housing	
103	7024193	2	Plate, Friction	
104	7024193	1	Plate, Pressure	
105	7000731	1	Gasket	
106	7024193	2	Plate, Outer	
107	See Note	1	Gasket (Note: Use Item 150, 153 or 154.)	
108	7024191	1	Cylinder	
109	7024192	1	Piston	
110	7024197	1	Bearing, Ball	
111	7024197	1	Ring, Retaining	
112	7024197	1	Seal, Shaft	
113	See Note	6	Capscrew (Note: Not Available - Purchase Locally)	
114	See Note	6	Lockwasher (Note: Not Available - Purchase Locally)	
115	7024194	1	O-Ring	
116	7024194	1	Ring, Back-up	
117	7024194	1	O-Ring	
118	7024194	1	Ring, Back-up	
119	7024190	2	Pin, Dowel	
120	See Note	1	Plug (Note: Not Available - Purchase Locally)	
121	See Note	2	Plug (Note: Not Available - Purchase Locally)	
122	7024196	10	Spring Kit (Natural)	
123	7024196	2	Spring Kit (Blue)	
150	70006429	1	Seal Kit, Hub (Includes Items 1I, 5, 5A & 12)	
150	70006428	1	Seal & Bearing Kit, Hub (Includes Items 1C-1F, 1I, 5, 5A & 12)	
150	7024194	1	Seal Kit, Brake (Includes Items 105, 107 & 115-118)	
151	7024196	1	Spring Kit, Brake (Includes 12 Natural Colored Springs Item 122) (was p/n 7024195)	
152	7024196	1	Spring Kit, Brake (Includes 12 Natural Colored Springs Item 122 and 2 Blue Colored Springs Item 123)	
153	7024193	1	Friction Disc Kit, Brake (Includes Items 103, 104, 106 & 107)	
154	7024197	1	Bearing Kit, Brake (Includes Items 107 & 110-112)	

FIGURE 1-8. DRIVE HUB ASSEMBLY (FRONT) (4WD ONLY)

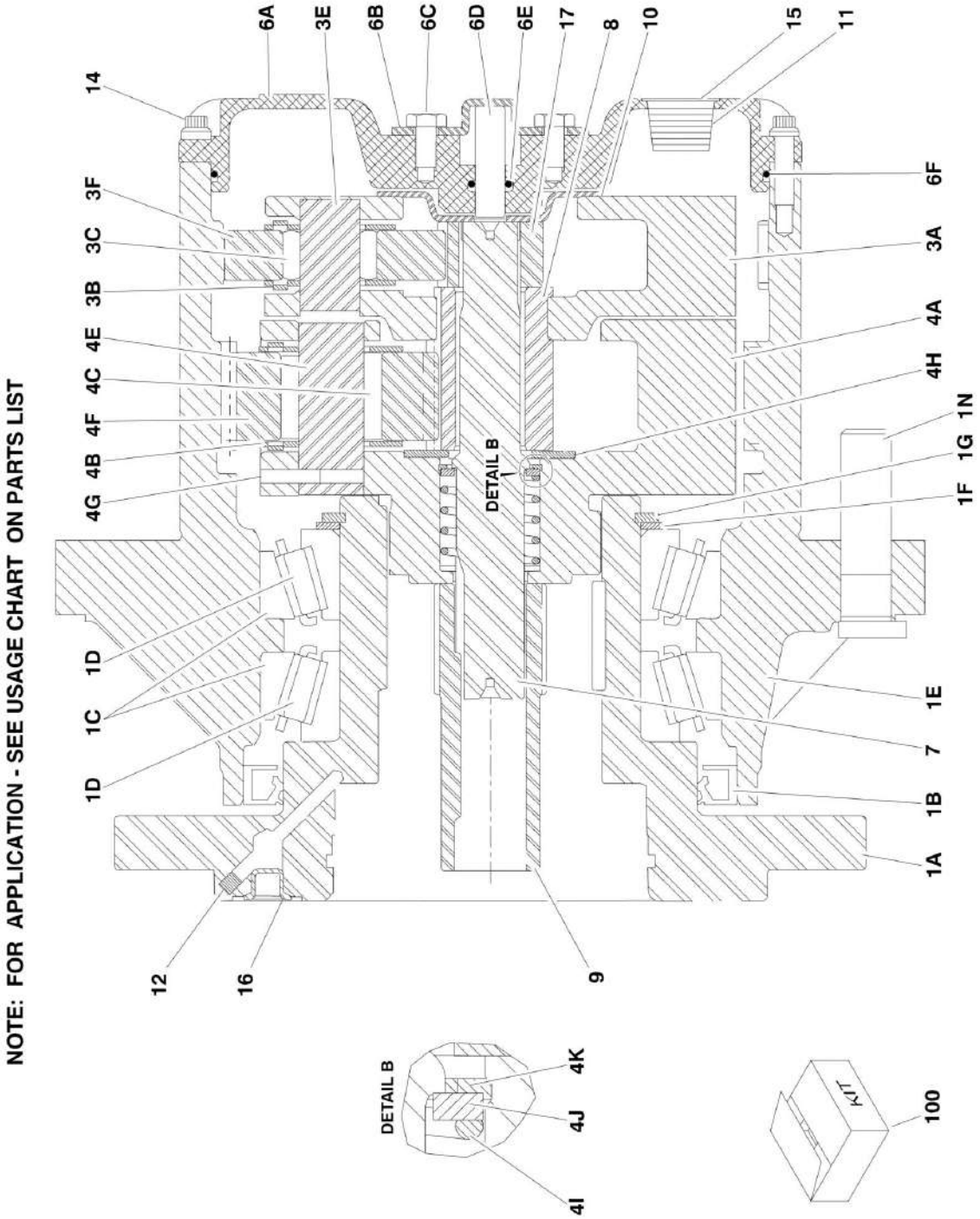

FIGURE 1-8. DRIVE HUB ASSEMBLY (FRONT) (4WD ONLY)

ITEM	PART NUMBER	QTY	DESCRIPTION	REV
		Ref	**USAGE CHART:**	
		Ref	**Machines (SN 0300065080 through 0300071527, SN 1300000001 through 1300000162)**	
		Ref	**NOTE: Hub may have been replaced with Service kit p/n 1001178136 (kit uses p/n 2780268). See next figure for service parts.**	
	2780257	Ref	**DRIVE HUB ASSEMBLY**	F
1	See Note	1	Spindle/Housing Assembly (Note: Not Available - Purchase Individual Components)	
1A	7024105	1	Spindle	
1B	7024113	1	Seal	
1C	7007006	2	Cone, Bearing	
1D	7024112	2	Cup, Bearing	
1E	7024110	1	Housing/Ring Gear	
1F	7024109	1	Thrustwasher	
1G	7024107	1	Ring, Retaining	
1N	7024111	9	Stud, Wheel	
3	See Note	1	Carrier Assembly (Note: Not Available - Purchase Individual Components)	
3A	7024116	1	Carrier	
3B	7024127	6	Thrustwasher	
3C	7024123	42	Bearing, Needle	
3E	7024120	3	Shaft, Planet	
3F	7024118	3	Gear, Planet	
4	See Note	1	Carrier Assembly (Note: Not Available - Purchase Individual Components)	
4A	7024117	1	Carrier	
4B	7024126	6	Thrustwasher	
4C	7024122	45	Bearing, Needle	
4E	7024121	3	Shaft, Planet	
4F	7024119	3	Gear, Planet	
4G	7001913	3	Rollpin	
4H	7024128	1	Thrustwasher	
4I	7024124	1	Spring	
4J	7024129	1	Thrustwasher	
4K	7024125	1	Thrustwasher	
6	See Note	1	Cover Assembly (Note: Not Available - Purchase Individual Components)	
6A	7024132	1	Plate, Cover	
6B	7017093	1	Cap, Disengage	
6C	0641404	2	Bolt 1/2in-20NC x 1/2in	
6D	7017092	1	Pin, Dowel	
6E	7017095	1	O-Ring	
6F	7024134	1	O-Ring	
7	7024130	1	Shaft, Input	
8	7024115	1	Gear, Sun	
9	7024131	1	Coupling	
10	7017097	1	Spacer, Thrust	
11	7017094	2	Plug, Pipe	
12	7024108	1	Plug, Pressure	
14	7024133	12	Bolt 1/4in-20NC x 7/8in (Grade 8)	

SECTION 1 - FRAME

ITEM	PART NUMBER	QTY	DESCRIPTION	REV
15	See Note	1	Plate, ID (Not Shown) (Note: Not available for purchase)	
16	7017082	1	Plug, O-Ring	
17	7024114	1	Gear, Sun	
100	7024198	1	Seal Kit (Includes Items 1B, 1G & 6F)	

FIGURE 1-9. DRIVE HUB ASSEMBLY (FRONT) (4WD ONLY)

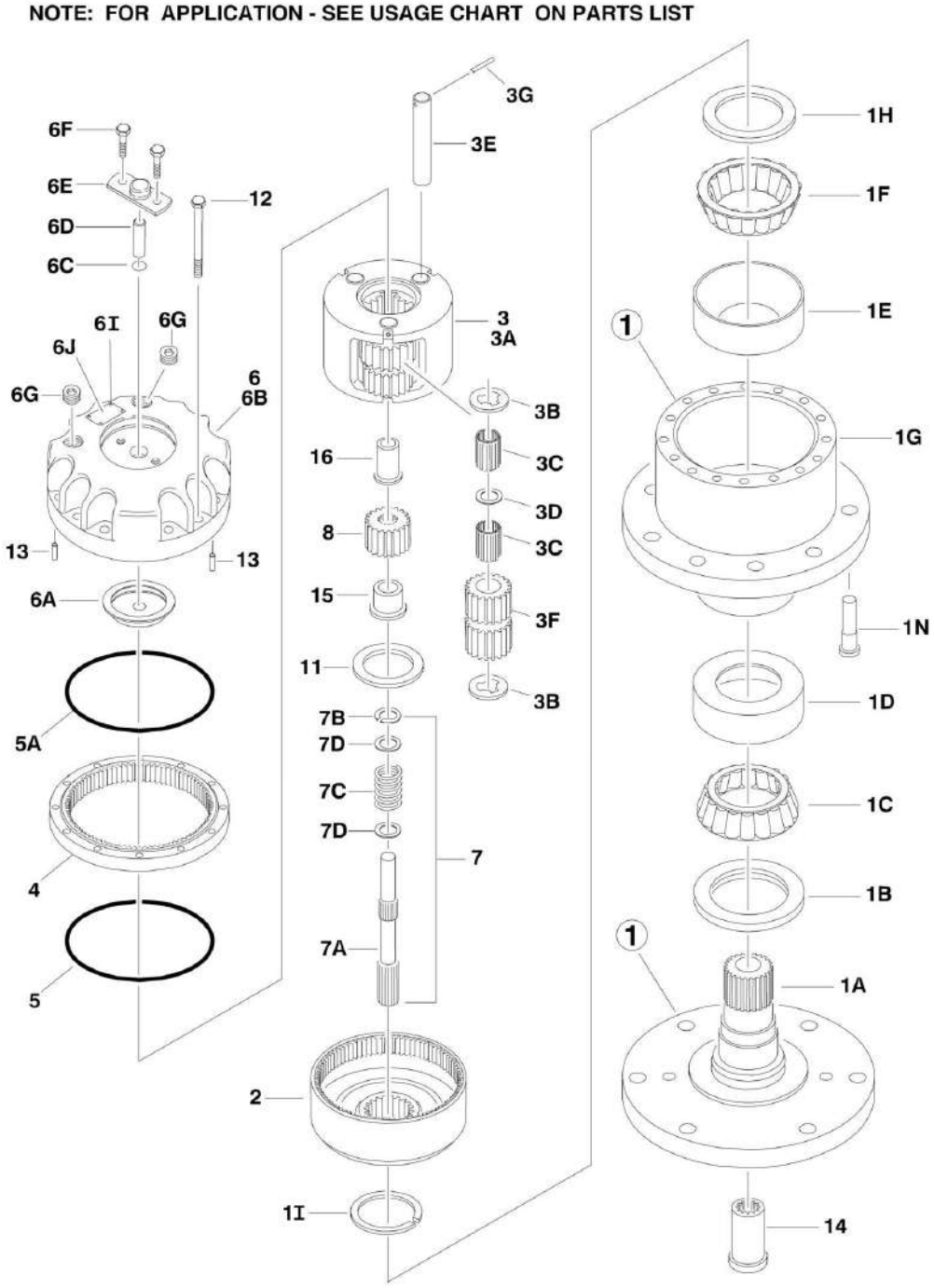

FIGURE 1-9. DRIVE HUB ASSEMBLY (FRONT) (4WD ONLY)

ITEM	PART NUMBER	QTY	DESCRIPTION	REV
		Ref	**USAGE CHART:**	
		Ref	**Machines (SN 0300071527 through 0300123999, SN 1300000162 through 1300006000)**	
	2780268	Ref	**DRIVE HUB ASSEMBLY**	C
1	See Note	1	Spindle/Housing Assembly (Note: Not Available - Purchase Individual Components)	
1A	7017059	1	Spindle	
1B	7001998	1	Seal	
1C	7010429	1	Cone, Bearing (Includes Item 1D)	
1D	7010429	1	Cup, Bearing (Includes Item 1C)	
1E	7000257	1	Cup, Bearing	
1F	7000258	1	Cone, Bearing	
1G	7007601	1	Housing/Ring Gear	
1H	7000232	1	Thrustwasher	
1I	7000229	1	Ring, Retaining	
1N	7007640	9	Stud, Wheel	
2	7000246	1	Gear, Internal	
3	7024712	1	Carrier Assembly	
3A	7024712	1	Carrier	
3B	7024712	6	Ring, Retaining	
3C	7024712	AR	Bearing, Needle	
3D	7024712	3	Thrustwasher	
3E	7024712	3	Shaft, Planet	
3F	7024712	3	Gear, Planet	
3G	7024712	3	Rollpin	
4	7000248	1	Ring Gear	
5	7000230	1	O-Ring	
5A	7017070	1	O-Ring	
6	70001349	1	Cover Assembly (was p/n 7017090)	
6A	70001349	1	Spacer, Thrust (was p/n 7017097)	
6B	70001349	1	Plate, Cover (was p/n 7017091)	
6C	70001349	1	O-Ring (was p/n 7017095)	
6D	70001349	1	Rod, Disconnect (was p/n 7017092)	
6E	70001349	1	Cap, Disengage (was p/n 7017093)	
6F	70001349	2	Bolt (was p/n 0641404)	
6G	7017094	1	Plug, Pipe	
6I	See Note	4	Rivet (Note: Not Available - Purchase Locally)	
6J	See Note	1	Plate, ID (Note: Not Available - Purchase Locally)	
7		Ref	Input Shaft Assembly	
7A	7024714	1	Shaft	
7B	7000261	1	Ring, Retaining	
7C	7000262	1	Spring	
7D	7000263	2	Spacer, Thrust	
8	7024713	1	Gear, Sun	
11	7000253	1	Thrustwasher	
12	7017067	12	Bolt	
13	7017080	4	Pin, Dowel	
14	7000206	1	Coupling	
15	7024715	1	Spacer, Input	
16	7024716	1	Spacer, Input	

SECTION 1 - FRAME

ITEM	PART NUMBER	QTY	DESCRIPTION	REV
150	70006429	1	Seal Kit, Hub (Includes Items 1I, 5, 5A & 12) (Not Shown)	
150	70006428	1	Seal & Bearing Kit, Hub (Includes Items 1C-1F, 1I, 5, 5A & 12) (Not Shown)	

FIGURE 1-10. DRIVE MOTOR ASSEMBLY (2WD)

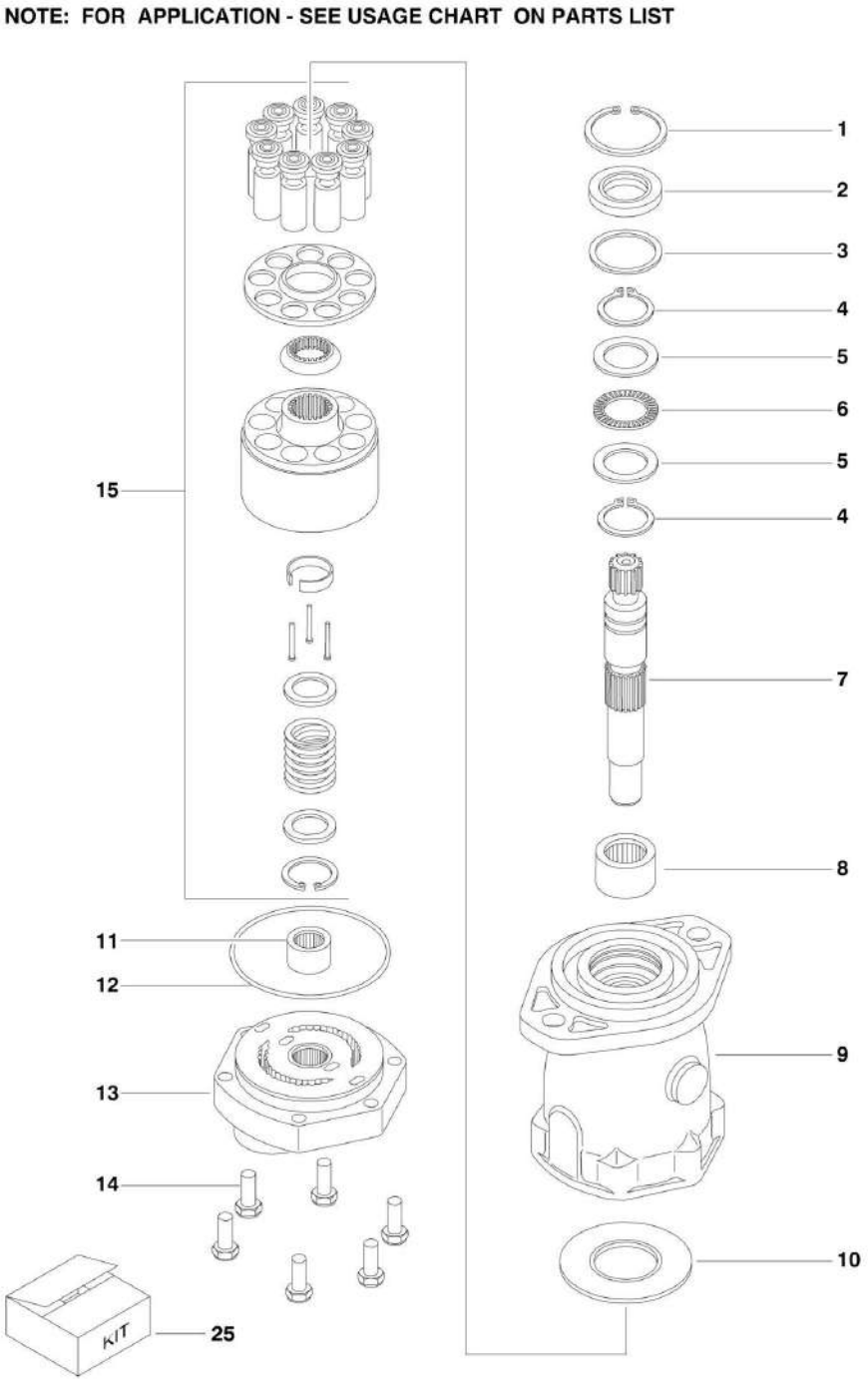

FIGURE 1-10. DRIVE MOTOR ASSEMBLY (2WD)

ITEM	PART NUMBER	QTY	DESCRIPTION	REV
		Ref	**USAGE CHART:**	
		Ref	**2WD Machines with Caterpillar/Deutz/Ford Engines (SN 0300065080 through 0300100514)**	
	3160158	Ref	**DRIVE MOTOR ASSEMBLY - REAR**	A
1	2900714	1	Ring, Retaining	
2	2900714	1	Seal, Shaft	
3	7004906	1	Washer	
4	2900714	2	Ring, Retaining	
5	7004907	2	Race, Thrust	
6	7004908	1	Bearing, Thrust	
7	7007874	1	Shaft, Splined	
8	7004910	1	Bearing	
9	7007875	1	Housing Assembly (Includes Item 8)	
10	7007876	1	Insert, Camplate	
11	7004917	1	Bearing	
12	2900714	1	O-Ring	
13	7007878	1	Back Plate Assembly (Includes Item 11)	
14	7007879	6	Bolt	
15	7007880	1	Rotating Kit Assembly (Sold As An Assembly Only)	
25	2900714	1	Seal Kit (Includes Items 1, 2, 4 & 12)	

FIGURE 1-11. DRIVE MOTOR ASSEMBLY (2WD)

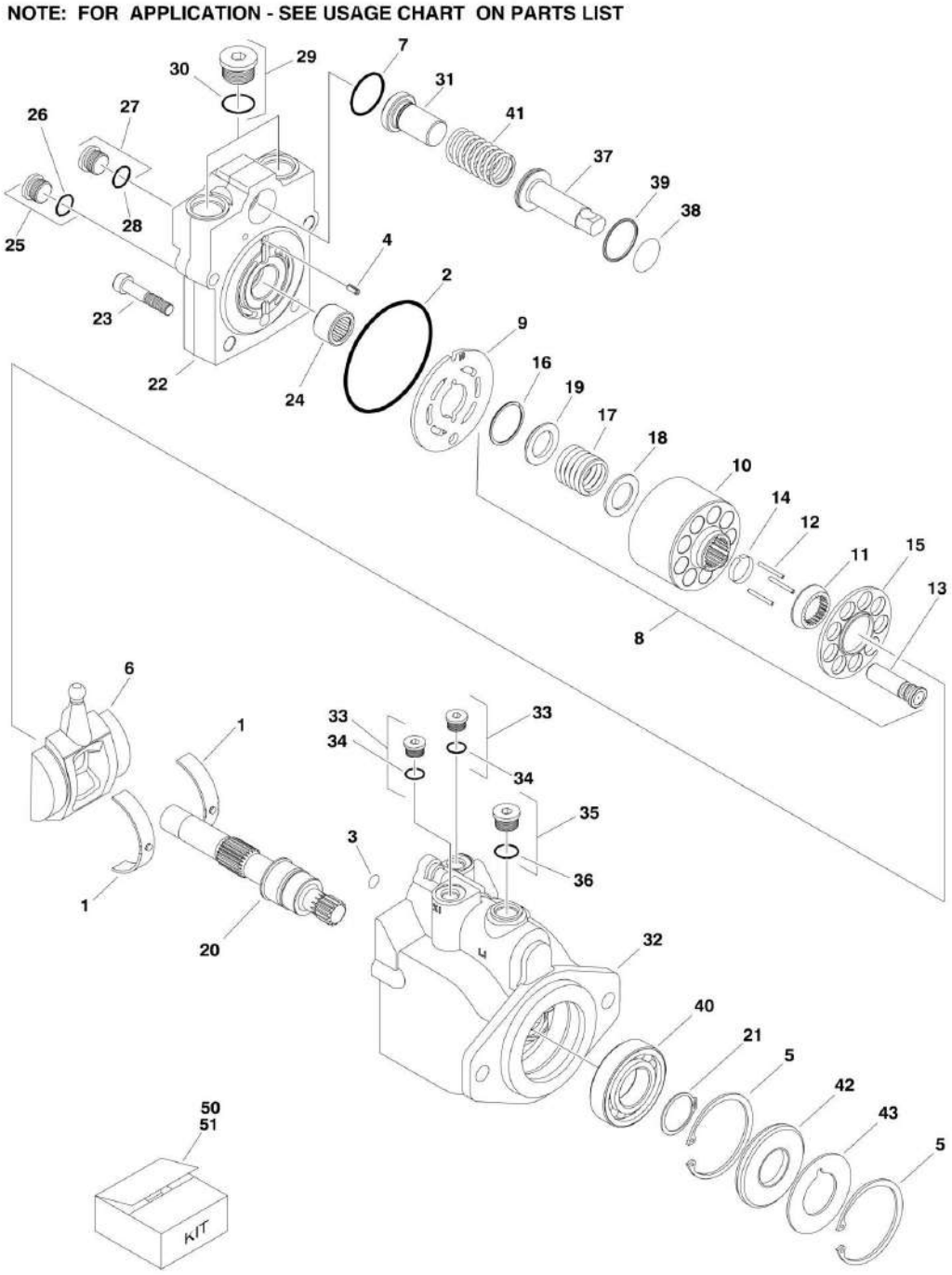

FIGURE 1-11. DRIVE MOTOR ASSEMBLY (2WD)

ITEM	PART NUMBER	QTY	DESCRIPTION	REV
		Ref	**USAGE CHART:**	
		Ref	**2WD Machines with GM Engines (SN 0300065080 through 0300098789)**	
		Ref	**Note: Original Equipment Motor p/n 3160298 uses 4 bolts to assemble the motor. Service Replacement Motor p/n 3160351 motors use 5 bolts to assemble the motor. Visually identify component before ordering parts. If equipped with 3160351 refer to next illustration.**	
	3160298	Ref	**DRIVE MOTOR ASSEMBLY**	C
1	7022302	2	Bearing, Journal	
2	7022328	1	O-Ring	
3	7022328	1	O-Ring	
4	7007446	1	Pin	
5	7007438	2	Ring, Retaining	
6	7022305	1	Swashplate	
7	7022328	1	O-Ring	
8	7023907	1	Cylinder Block Kit (Includes Items 10-19)	
9	7023908	1	Plate, Valve	
10	7023907	1	Block, Cylinder	
11	7021277	1	Guide, Slipper Retainer	
12	7021275	3	Pin, Slipper Hold Down	
13	7023907	9	Piston Assembly	
14	7021276	1	Retainer, Hold Down Pin	
15	7022310	1	Retainer, Slipper	
16	7022311	1	Ring, Retaining	
17	7022312	1	Spring	
18	7024868	1	Washer	
19	7022314	1	Retainer, Spring	
20	7023910	1	Shaft	
21	7007439	1	Ring, Retaining	
22	7024852	1	Cap, End - Axial	
23	7022368	4	Screw	
24	7021249	1	Bearing, Needle	
25	7022321	1	Plug (Includes Item 26)	
26	7022328	1	O-Ring	
27	7022318	1	Plug (Includes Item 28)	
28	7022328	1	O-Ring	
29	7027419	1	Plug Options (Includes Item 30) (Not Shown)	
30	7022328	1	O-Ring (Not Shown)	
31	7024853	1	Seat, Spring	
32	7022370	1	Housing	
33	7022318	2	Plug (Items Item 34)	
34	7022328	2	O-Ring	
35	7022321	1	Plug (Items Item 36)	
36	7022328	1	O-Ring	
37	7024854	1	Piston, Servo (Includes Item 38 & 39)	
38	7022328	1	O-Ring	
39	7022328	1	Ring, Seal	
40	7007437	1	Bearing	
41	7022326	1	Spring	
42	7022328	1	Seal, Lip	

SECTION 1 - FRAME

ITEM	PART NUMBER	QTY	DESCRIPTION	REV
43	7022371	1	Washer, Support	
50	7022328	1	Seal Kit (Includes Items 2, 3, 7, 26, 28, 30, 34, 36, 38, 39 & 42)	
51	7023907	1	Cylinder Block Kit (Includes Items 10-19)	

FIGURE 1-12. DRIVE MOTOR ASSEMBLY (2WD)

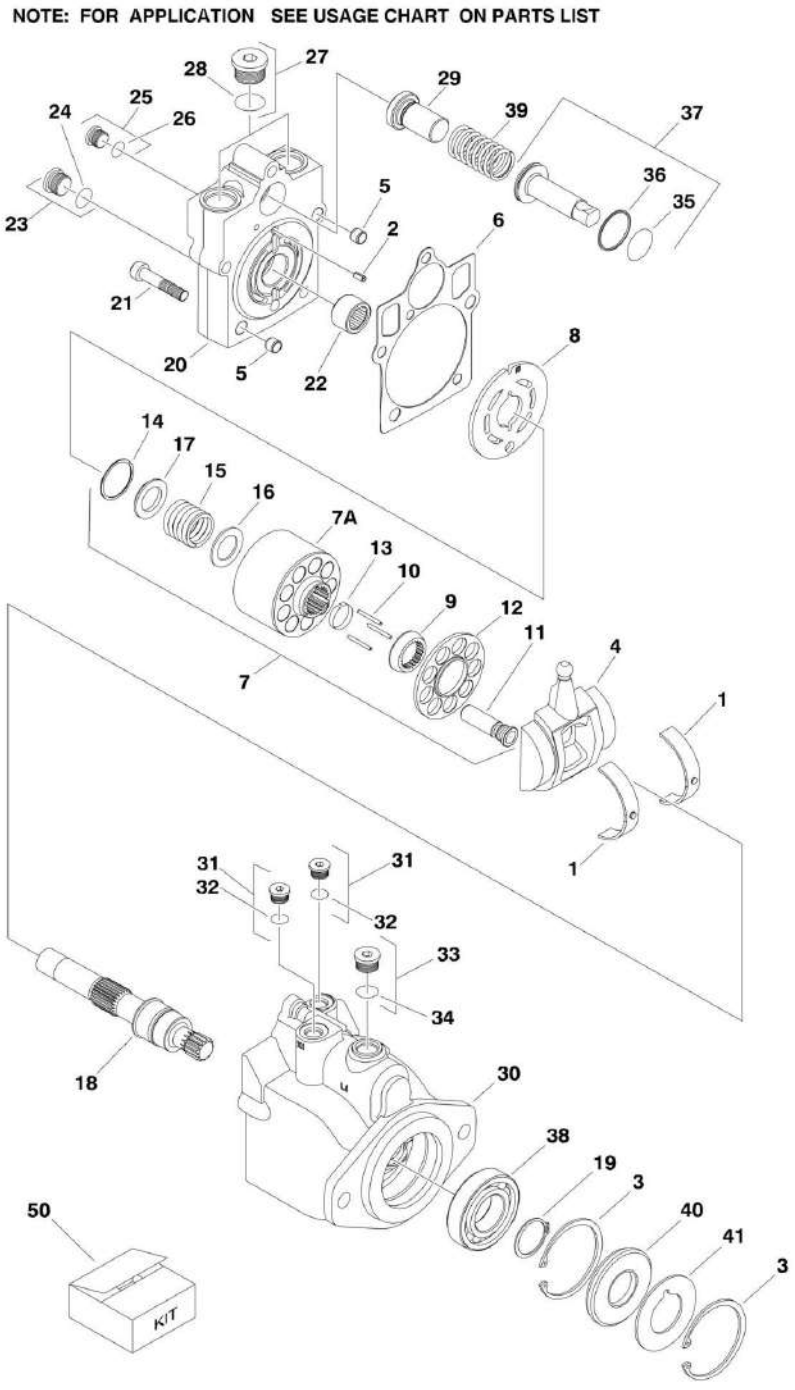

FIGURE 1-12. DRIVE MOTOR ASSEMBLY (2WD)

ITEM	PART NUMBER	QTY	DESCRIPTION	REV
		Ref	**USAGE CHART:**	
		Ref	**2WD Machines with Caterpillar/Deutz/Ford Engines (SN 0300098789 through 0300123999)**	
		Ref	**2WD Machines with GM Engines (SN 0300098789 through 0300123999)**	
		Ref	**DRIVE MOTOR ASSEMBLY**	
	3160351	Ref	**Original Equipment Motor for USA Built Machines (Caterpillar/Deutz/Ford Engines) (SN 0300100514 through 0300123999)**	B
	3160351	Ref	**Original Equipment Motor for USA Built Machines (GM Engines) (SN 0300098789 through 0300123999)**	B
	3160351	Ref	**Service Replacement Motor for p/n 3120298 (Note: Used on USA Manufactured Machines Only)**	B
		Ref	**Note: Used on USA Manufactured Machines Only.**	
1	7022302	2	Bearing, Journal	
2	7007446	1	Pin	
3	7007438	2	Ring, Retaining	
4	7022305	1	Swashplate	
5	See Note	2	Pin (Note: Not available for purchase)	
6	7022328	1	Gasket	
7	7023907	1	Cylinder Block Kit (Includes Items 7A & 9-17)	
7A	7023907	1	Block, Cylinder	
8	7023908	1	Plate, Valve	
9	7021277	1	Guide, Slipper Retainer	
10	7021275	3	Pin, Slipper Hold Down	
11	7023907	9	Piston Assembly	
12	7021276	1	Retainer, Hold Down Pin	
13	7022310	1	Retainer, Slipper	
14	7022311	1	Ring, Retaining	
15	7022312	1	Spring	
16	7024868	1	Washer	
17	7022314	1	Retainer, Spring	
18	7023910	1	Shaft	
19	7007439	1	Ring, Retaining	
20	70000797	1	Cap, End - Axial	
21	7022368	5	Screw	
22	7021249	1	Bearing, Needle	
23	2220886	1	Plug (Includes Item 24)	
24	7022328	1	O-Ring	
25	2220883	1	Plug (Includes Item 26)	
26	7022328	1	O-Ring	
27	7027419	2	Plug (Includes Item 28)	
28	7022328	2	O-Ring	
29	7024853	1	Seat, Spring	
30	3160351	1	Housing	
31	2220883	2	Plug (Includes Item 32)	
32	7022328	2	O-Ring	
33	2220886	1	Plug (Includes Item 34)	
34	7022328	1	O-Ring	
35	7022328	1	O-Ring	
36	7022328	1	Ring, Seal	

SECTION 1 - FRAME

ITEM	PART NUMBER	QTY	DESCRIPTION	REV
37	7024854	1	Piston, Servo (Includes Items 35 & 36)	
38	7007437	1	Bearing	
39	7022326	1	Spring	
40	7022328	1	Seal, Lip	
41	7022371	1	Washer, Support	
50	7022328	1	Seal Kit (Includes Items 6, 24, 26, 28, 32, 34, 35, 36 & 40)	

FIGURE 1-13. DRIVE MOTOR ASSEMBLY (4WD)

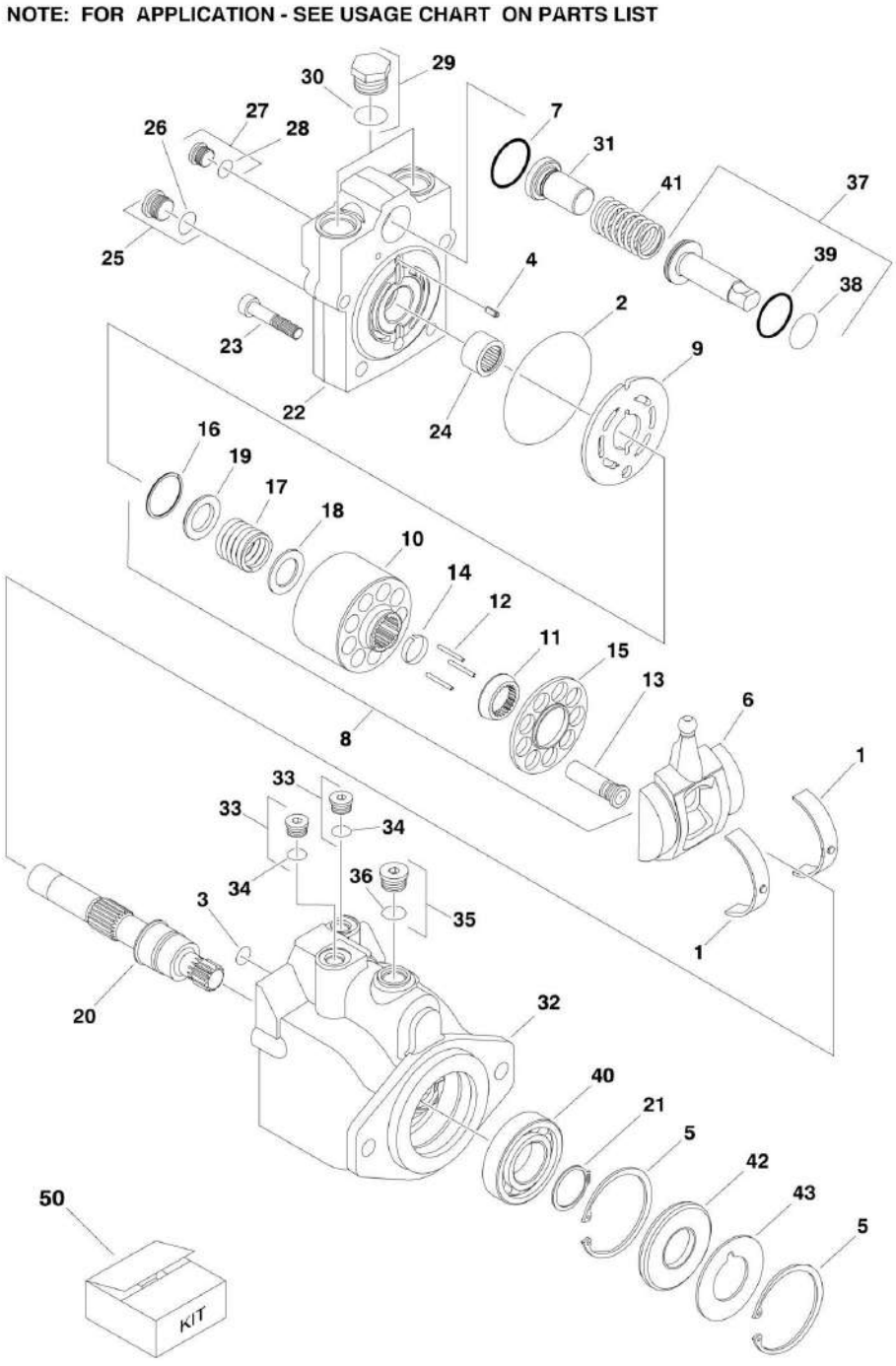

FIGURE 1-13. DRIVE MOTOR ASSEMBLY (4WD)

ITEM	PART NUMBER	QTY	DESCRIPTION	REV
		Ref	**USAGE CHART:**	
		Ref	**4WD Machines (SN 0300065080 through 0300098503)**	
		Ref	**4WD Machines (Prior to SN 1300002248)**	
		Ref	**DRIVE MOTOR ASSEMBLIES**	
	3160260	Ref	**USA Built Machines (SN 0300065080 through 0300069154)**	C
	3160266	Ref	**USA Built Machines (SN 0300069155 through 0300123999)**	D
	3160266	Ref	**Belgium Built Machines (SN 1300000001 through 1300006000)**	D
		Ref	**Note: Original Equipment Motors p/n 3160266 and 3160260use 4 bolts to assemble the motor. Service Replacement Motor motors use 5 bolts to assemble the motor. Visually identify component before ordering parts. If equipped with 3160352 (in place of 31260260) or 3160348 (in place of 3160266) refer to next illustration.**	
1	7022302	2	Bearing, Journal	
2	7022328	1	O-Ring	
3	7022328	1	O-Ring	
4	7007446	1	Pin	
5	7007438	2	Ring, Retaining	
6	7022305	1	Swashplate	
7	7022328	1	O-Ring	
8	7023907	1	Cylinder Block Kit (Includes Items 10-19)	
9	7023908	1	Plate, Valve	
10	7023907	1	Block, Cylinder	
11	7021277	1	Guide, Slipper Retainer	
12	7021275	3	Pin, Slipper Hold Down	
13	7023907	9	Piston Assembly	
14	7021276	1	Retainer, Hold Down Pin	
15	7022310	1	Retainer, Slipper	
16	7022311	1	Ring, Retaining	
17	7022312	1	Spring	
18	7024868	1	Washer	
19	7022314	1	Retainer, Spring	
20	7023910	1	Shaft	
21	7007439	1	Ring, Retaining	
22	7022367	1	Cap, End - Axial	
23	7022368	4	Screw	
24	7021249	1	Bearing, Needle	
25	7022321	1	Plug (Includes Item 26)	
26	7022328	1	O-Ring	
27	7022318	1	Plug (Includes Item 28)	
28	7022328	1	O-Ring	
29	7007419	2	Plug (Includes Item 30)	
30	7022328	2	O-Ring	
31	7022329	1	Seat, Spring (Used with Motor p/n 3160260)	
31	7022372	1	Seat, Spring (Used with Motor p/n 3160266)	
32	7022370	1	Housing	
33	7022318	2	Plug (Includes Item 34)	
34	7022328	2	O-Ring	
35	7022321	1	Plug (Includes Item 36)	
36	7022328	1	O-Ring	
37	7022323	1	Piston, Servo (Includes Item 38 & 39)	

SECTION 1 - FRAME

ITEM	PART NUMBER	QTY	DESCRIPTION	REV
38	7022328	1	O-Ring	
39	7022328	1	Ring, Seal	
40	7007437	1	Bearing	
41	7022326	1	Spring	
42	7022328	1	Seal, Lip	
43	7022371	1	Washer, Support	
50	7022328	1	Seal Kit (Includes Items 2, 3, 7, 26, 28, 30, 34, 36, 38, 39 & 42)	

FIGURE 1-14. DRIVE MOTOR ASSEMBLY (4WD)

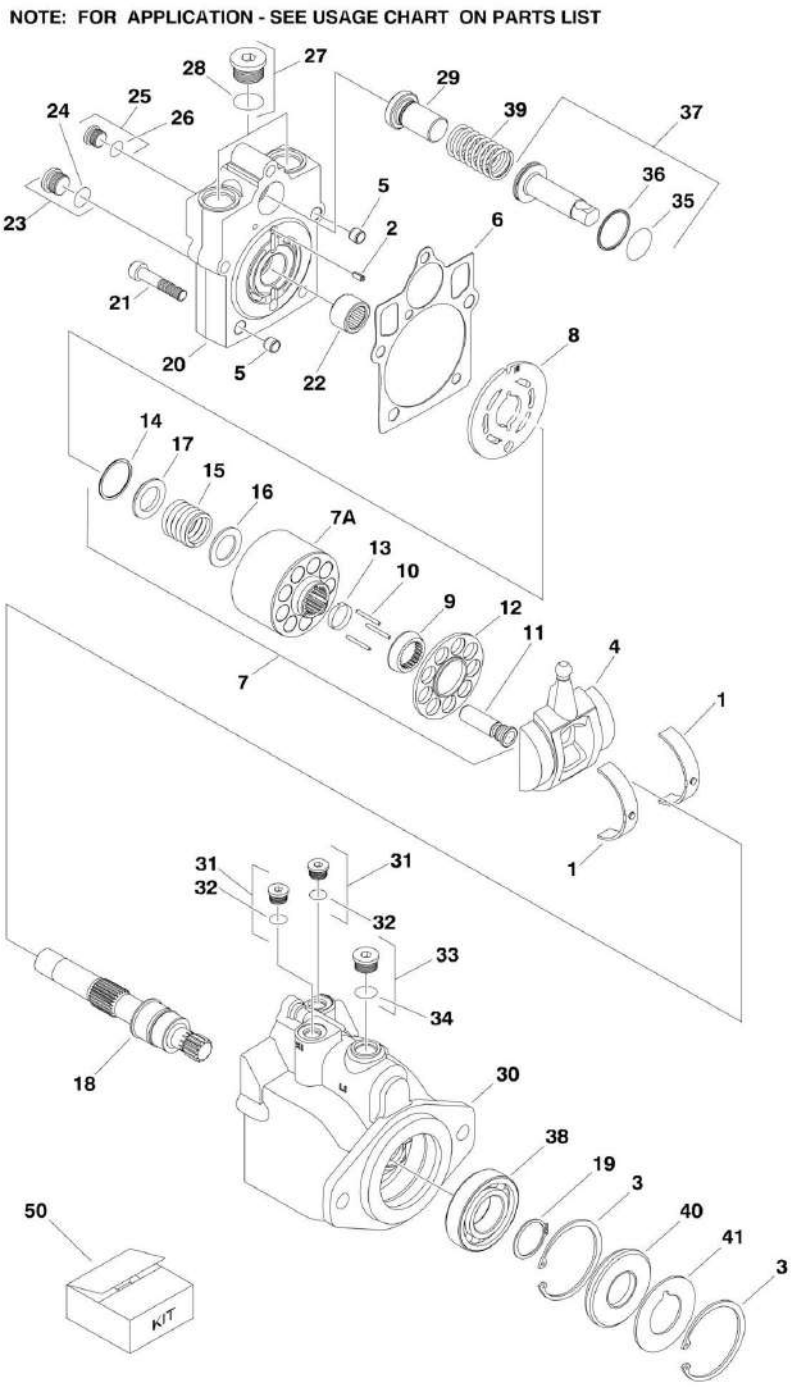

FIGURE 1-14. DRIVE MOTOR ASSEMBLY (4WD)

ITEM	PART NUMBER	QTY	DESCRIPTION	REV
		Ref	**USAGE CHART:**	
		Ref	**4WD Machines (SN 0300098503 through 0300123999)**	
		Ref	**4WD Machines (SN 1300002248 through 1300006000)**	
		Ref	**DRIVE MOTOR ASSEMBLY**	
	3160348	Ref	**Original Equipment Motor for USA Built Machines (SN 0300098503 through 0300123999)**	B
	3160348	Ref	**Service Replacement Motor for p/n 3120266**	B
	3160348	Ref	**Original Equipment Motor for Belgium Built Machines (SN 1300002248 through 1300006000)**	B
	3160352	Ref	**Service Replacement Motor for p/n 3120260**	B
1	7022302	2	Bearing, Journal	
2	7007446	1	Pin	
3	7007438	2	Ring, Retaining	
4	7022305	1	Swashplate	
5		Ref	Pin	
5	See Note	2	3160348 Motor (Note: Not available for purchase)	
5	Not Required	1	3160352 Motor	
6	7022328	1	Gasket	
7	7023907	1	Cylinder Block Kit (Includes Items 7A & 9-17)	
7A	7023907	1	Block, Cylinder	
8	7023908	1	Plate, Valve	
9	7021277	1	Guide, Slipper Retainer	
10	7021275	3	Pin, Slipper Hold Down	
11	7023907	9	Piston Assembly	
12	7021276	1	Retainer, Hold Down Pin	
13	7022310	1	Retainer, Slipper	
14	7022311	1	Ring, Retaining	
15	7022312	1	Spring	
16	7024868	1	Washer	
17	7022314	1	Retainer, Spring	
18	7023910	1	Shaft	
19	7007439	1	Ring, Retaining	
20		Ref	Cap, End - Axial Options:	
20	70000797	1	3160348 Motor	
20	See Note	1	3160352 Motor (Note: Not available for purchase)	
21	7022368	5	Screw	
22	7021249	1	Bearing, Needle	
23	2220886	1	Plug (Includes Item 24)	
24	7022328	1	O-Ring	
25	2220883	1	Plug (Includes Item 26)	
26	7022328	1	O-Ring	
27	2220888	2	Plug (Includes Item 28)	
28	7022328	2	O-Ring	
29		Ref	Seat, Spring Options:	
29	7022372	1	3160348 Motor	
29	7022329	1	3160352 Motor	
30	See Note	1	Housing (Note: Not Available - Purchase Complete Motor)	
31	2220883	2	Plug (Items Item 32)	
32	7022328	2	O-Ring	
33	2220886	1	Plug (Items Item 34)	

SECTION 1 - FRAME

ITEM	PART NUMBER	QTY	DESCRIPTION	REV
34	7022328	1	O-Ring	
35	7022328	1	O-Ring	
36	7022328	1	Ring, Seal	
37		Ref	Piston, Servo (Includes Items 35 & 36)	
37	7024854	1	3160348 Motor	
37	7022323	1	3160352 Motor	
38	7007437	1	Bearing	
39	7022326	1	Spring	
40	7022328	1	Seal, Lip	
41	7022371	1	Washer, Support	
50	7022328	1	Seal Kit (Includes Items 6, 24, 26, 28, 32, 34, 35, 36 & 40)	

FIGURE 1-15. DRIVE VALVES INSTALLATIONS

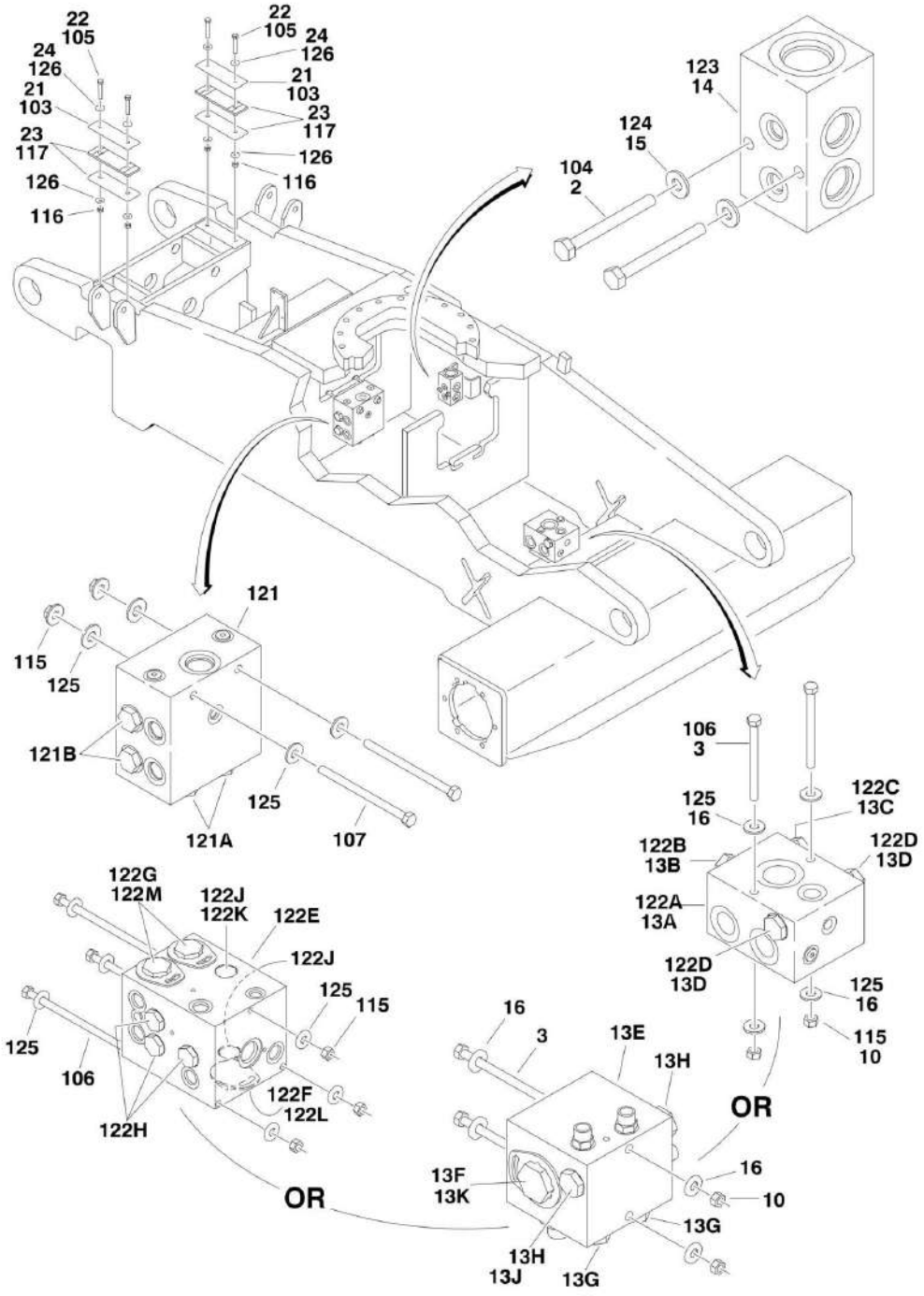

FIGURE 1-15. DRIVE VALVES INSTALLATIONS

ITEM	PART NUMBER	QTY	DESCRIPTION	REV
		Ref	**DRIVE VALVES INSTALLATION - 2WD**	
	0270870	Ref	**Caterpillar/Deutz/ Ford Engine Machines (SN 0300065080 through 0300071526)**	E
	0272907	Ref	**Caterpillar/Deutz/ Ford Engine Machines (SN 0300071527 through 0300100513)**	C
	0275470	Ref	**Caterpillar/Deutz/ Ford Engine Machines (SN 0300100514 through 0300107512)**	D
	0275470	Ref	**GM Engine Machines (SN 0300065080 through 0300107511)**	D
	0275853	Ref	**All Machines (SN 0300107512 through 0300123999)**	F
		Ref	**Note: 2WD Models Manufactured in USA Only.**	
2	0641420	2	Bolt 1/4in-20NC x 2-1/2in	
3		Ref	Bolt Options:	
3	0641530	2	Bolt 5/16in-18NC x 3-3/4in **(SN 0300065080 through 0300107511)**	
3	0641542	2	Bolt 5/16in-18NC x 5-1/4in **(SN 0300107512 through 0300123999)**	
10	3311505	2	Locknut 5/16in-18NC	
13		Ref	Flow Divider Valve Assembly Options:	
13A	4641206	1	Flow Divider for Caterpillar/Deutz/Ford Engine Machines **(SN 0300065080 through 0300100513)**	
13A	4641207	1	Flow Divider for Caterpillar/Deutz/Ford Engine Machines **(SN 0300100514 through 0300107511)**	
13A	4641207	1	Flow Divider for GM Engine Machines **(SN 0300065080 through 0300107511)**	A
13B	7023933	1	Valve, Cartridge (Flow Divider) (4641206 Valve)	
13B	7023917	1	Valve, Cartridge (Flow Divider) (4641207 Valve)	
13B	7021625	1	Seal Kit - 7023917 Flow Divider Cartridge	
13C	7022397	1	Valve, Cartridge (Check) (4641206 & 4641207 Valves)	
13C	7022399	1	Seal Kit - 7022397 Check Cartridge	
13D	7010542	2	Valve, Cartridge (Load Shuttle) (4641206 & 4641207 Valves)	
13D	7010543	2	Seal Kit - 7010542 Load Shuttle Cartridge	
13E	4641509	NLA	Flow Divider for All 2WD Machines (Use p/n 1001099390) **(SN 0300107512 through 0300123999)**	C
		Ref	**Note: Original Equipment Valve may have been replaced with Service Replacement Valve p/n 1001099390. Identify p/n stamped on Valve before ordering parts.**	
13F	7023917	1	Valve, Cartridge (Flow Divider) (4641509 & 1001099390 Valves)	
13F	7021625	1	Seal Kit - 7023917 Flow Divider Cartridge	
13G	7022397	2	Valve, Cartridge (Check) (4641509 & 1001099390 Valves)	
13G	7022399	2	Seal Kit - 7022397 Check Cartridge	
13H	7021639	2	Valve, Cartridge (Check) (4641509 Valve)	
13H	7017496	2	Seal Kit - 7021639 Check Cartridge (was p/n 2900756)	
13H	70002390	2	Valve, Cartridge (Check) (1001099390 Valve)	
13H	7022399	2	Seal Kit - 70002390 Check Cartridge	
13J	7024881	1	Piston, Pilot (4641509 & 1001099390 Valves)	
13K	70000781	1	Lockdown Kit (4641509 & 1001099390 Valves)	
14	4641155	1	Valve, Junction Manifold	A
15	4711400	2	Flatwasher 1/4in Thin	
16	4751500	4	Flatwasher 5/16in Regular	
21	0363012	2	Bar, Clamping	
22	0641618	4	Bolt 3/8in-16NC x 2-1/4in	

ITEM	PART NUMBER	QTY	DESCRIPTION	REV
23	3340911	4	Rubber, Clamp	
24	4751600	4	Flatwasher 3/8in Regular	
		Ref	**DRIVE VALVES INSTALLATIONS - 4WD**	
	0270871	Ref	**USA Built Machines (SN 0300065080 through 0300069154)**	F
	0272320	Ref	**USA Built Machines (SN 0300069155 through 0300071526)**	C
	0272895	Ref	**USA Built Machines (SN 0300071527 through 0300107511)**	G
	0275854	Ref	**USA Built Machines (SN 0300107512 through 0300123999)**	C
	0272320	Ref	**Belgium Built Machines (SN 1300000001 through 1300000063)**	C
	0272895	Ref	**Belgium Built Machines (SN 1300000064 through 1300003221)**	G
	0275854	Ref	**Belgium Built Machines (SN 1300003222 through 1300006000)**	B
103	0363012	2	Bar, Clamping	
104	0641420	2	Bolt 1/4in-20NC x 2-1/2in	
105	0641618	4	Bolt 3/8in-16NC x 2-1/4in	
106	0641530	2	Bolt 5/16in-18NC x 3-3/4in (USA Built Machines) **(SN 0300065080 through 0300107511)**	
106	0641530	2	Bolt 5/16in-18NC x 3-3/4in (Belgium Built Machines) **(Prior to SN 1300003222)**	
106	0641560	3	Bolt 5/16in-18NC x 7-1/2in (USA Built Machines) **(SN 0300107512 through 0300123999)**	
106	0641560	3	Bolt 5/16in-18NC x 7-1/2in (Belgium Built Machines) **(SN 1300003222 through 1300006000)**	
107	0641538	2	Bolt 5/16in-18NC x 4-3/4in (USA Built Machines) **(SN 0300065080 through 0300107511)**	
107	0641538	2	Bolt 5/16in-18NC x 4-3/4in (Belgium Built Machines) **(Prior to SN 1300003222)**	
115	3311505	AR	Locknut 5/16in-18NC	
116	3311605	4	Locknut 3/8in-16NC **(SN 0300065080 through 0300065160)**	
117	3340911	4	Rubber, Clamp	
121	4641208	1	Flow Divider Valve Assembly (USA Built Machines) **(SN 0300065080 through 0300107511)**	A
121	4641208	1	Flow Divider Valve Assembly (Belgium Built Machines) **(Prior to SN 1300003222)**	A
121A	7023934	2	Valve, Cartridge (Flow Divider) (4641208 Valve)	
121A	7021655	2	Seal Kit - 7023934 Flow Divider Cartridge	
121B	7023935	4	Valve, Cartridge (Check) (4641208 Valve)	
121B	7023936	4	Seal Kit - 7023936 Check Cartridge	
122		Ref	Flow Divider Valve Assembly Options:	
122A	4641207	1	Flow Divider Valve Assembly (USA Built Machines) **(SN 0300065080 through 0300107511)**	A
122A	4641207	1	Flow Divider Valve Assembly (Belgium Built Machines) **(Prior to SN 1300003222)**	A
122B	7023917	1	Valve, Cartridge (Flow Divider) (4641207 Valve)	
122B	7021625	1	Seal Kit - 7023917 Flow Divider Cartridge	
122C	7022397	1	Valve, Cartridge (Check) (4641207 Valve)	
122C	7022399	1	Seal Kit - 7022397 Check Cartridge	
122D	7010542	2	Valve, Cartridge (Load Shuttle) (4641207 Valve)	
122D	7010543	2	Seal Kit - 7010542 Load Shuttle Cartridge	
122E	4641510	1	Flow Divider Valve Assembly (USA Built Machines) **(SN 0300107512 through 0300123999)**	C
122E	4641510	1	Flow Divider Valve Assembly (Belgium Built Machines) **(SN 1300003222 through 1300006000)**	C
122F	7023917	1	Valve, Cartridge (Flow Divider) (4641510 Valve)	
122F	7021625	1	Seal Kit - 7023917 Flow Divider Cartridge	
122G	7023934	2	Valve, Cartridge (Flow Divider) (4641510 Valve)	

ITEM	PART NUMBER	QTY	DESCRIPTION	REV
122G	7021655	2	Seal Kit - 7023934 Flow Divider Cartridge	
122H	7022397	5	Valve, Cartridge (Check) (4641510 Valve)	
122H	7022399	5	Seal Kit - 7022397 Check Cartridge	
122J	7021639	2	Valve, Cartridge (Check) (4641510 Valve)	
122J	7017496	2	Seal Kit - 7021639 Check Cartridge (was p/n 2900756)	
122K	7024881	1	Piston, Pilot (4641510 Valve)	
122L	70000781	1	Lockdown Kit (4641510 Valve-Port FD1)	
122M	70002962	2	Lockdown Kit (4641510 Valve-Ports FD2 & FD3)	
123	4641155	1	Valve, Junction Manifold	A
124	4711400	2	Flatwasher 1/4in Thin	
125	4751500	8	Flatwasher 5/16in Regular	
126	4751600	AR	Flatwasher 3/8in Regular	

FIGURE 1-16. TOW BAR INSTALLATION (OPTIONAL)

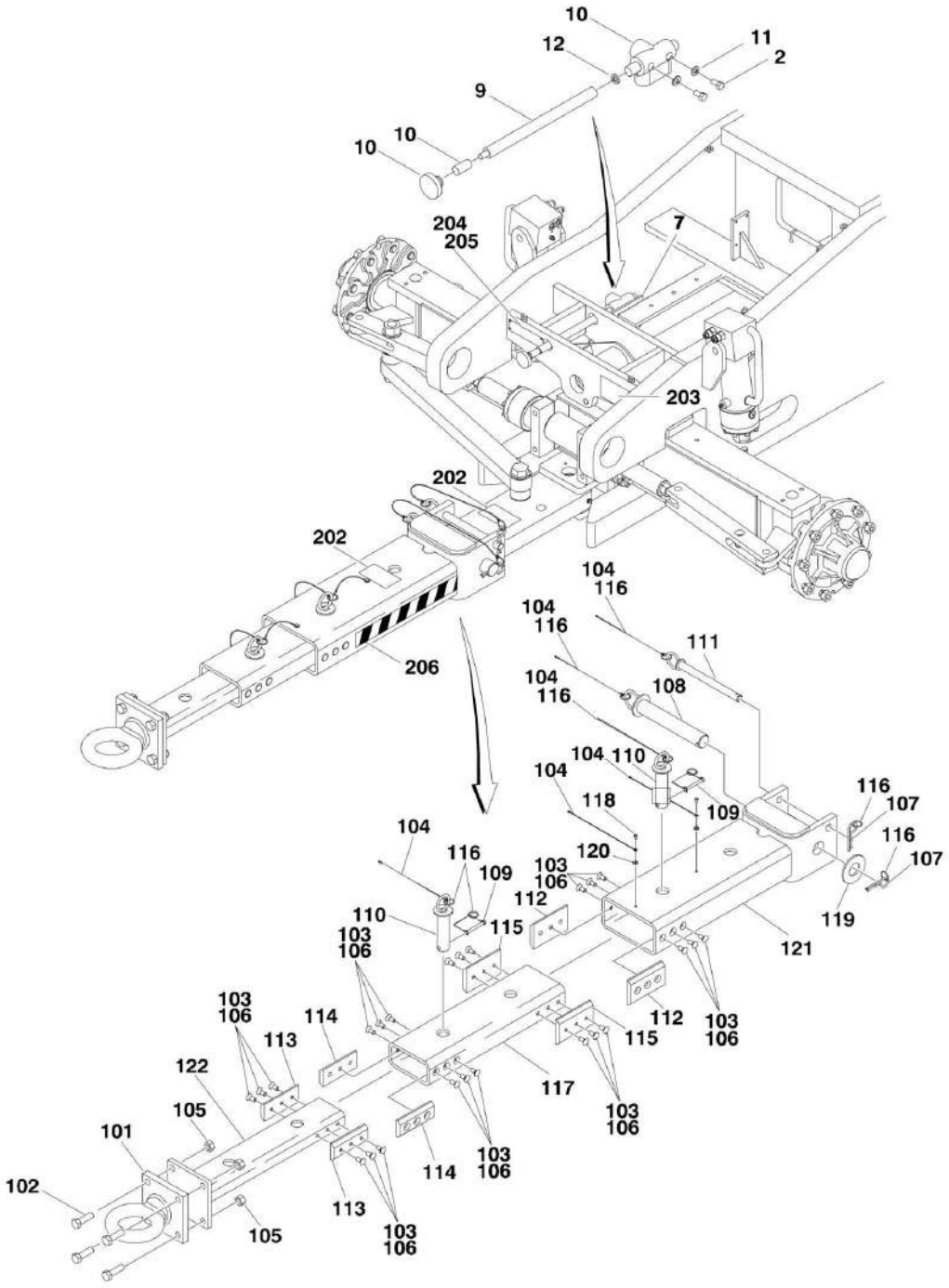

FIGURE 1-16. TOW BAR INSTALLATION (OPTIONAL)

ITEM	PART NUMBER	QTY	DESCRIPTION	REV
	0259845	Ref	**TOW BAR INSTALLATION - 2WD**	B
		Ref	**Note: Only Available on 2WD Machines.**	
2	0641505	2	Bolt 5/16in-18NC x 5/8in	
7	3572102	1	Plate (Weld on Part)	
9	3841329	1	Rod, Extension	
10	4640261	1	Steer/Tow Select Valve	
11	4711500	2	Flatwasher 5/16in	
12	4761600	1	Lockwasher 3/8in	
	0259853	Ref	**TOW BAR ASSEMBLY**	B
101	0362910	1	Pintle, Draw Eye	
102	0682016	4	Bolt 5/8in-11NC x 2in	
103	0741607	24	Flat Head Socket Screw 3/8in-16NC x 5/8in	
104	1060584	6	Cable, Lanyard	
105	3272005	4	Locknut 5/8in-11NC	
106	0100011	AR	Compound, Locking	
107	3420372	2	Pin, Cotter	
108	3420447	1	Pin, Towing	
109	3421565	2	Pin, Snapper	
110	3422841	2	Pin	
111	3422847	1	Pin	
112	3572009	2	Plate, Slide Stop	
113	3572010	2	Plate, Slide Stop	
114	3572011	2	Plate, Slide Stop	
115	3572012	2	Plate, Slide Stop	
116	3760170	8	Ring, Split	
117	4568033	1	Tube, Tow Bar	
118	0721004	8	Screw #10-24NC x 1/2in	
119	4740036	1	Flatwasher, Special	
120	4751000	2	Flatwasher #10 Regular	
121	4846168	1	Weldment, Tow Bar Attach	
122	4846169	1	Weldment, Pintle Attach	
		Ref	**TOW BAR DECAL INSTALLATION**	
	0270115	Ref	**English Language (ANSI & ANSI Export Specs)**	1
	0270119	Ref	**English/Spanish Language (Dual Language) (ANSI Export Specs)**	1
	0270116	Ref	**Spanish Language (CE Spec)**	1
201		Ref	Decal - Tow Instructions (Not Shown Located on Frame Shield)	
201	1704482	1	English Language (ANSI & ANSI Export Specs)	
201	1704457	1	English/Spanish Language (Dual Language) (ANSI Export Specs)	
201	1704455	1	Spanish Language (CE Spec)	
202		Ref	Decal - Crushing	
202	1704578	3	English Language (ANSI & ANSI Export Specs)	
202	1704577	3	English/Spanish Language (Dual Language) (ANSI Export Specs)	
202	1701518	3	Spanish Language (CE Spec)	
203		Ref	Decal - Warning	
203	1703450	1	English Language (ANSI & ANSI Export Specs)	
203	1704576	1	English/Spanish Language (Dual Language) (ANSI Export Specs)	

SECTION 1 - FRAME

ITEM	PART NUMBER	QTY	DESCRIPTION	REV
203	1704456	1	Spanish Language (CE Spec)	
204		Ref	Nameplate - Steer/Tow Select Valve	
204	3250872	1	English Language (ANSI & ANSI Export Specs)	
204	3252693	1	English/Spanish Language (Dual Language) (ANSI Export Specs)	
204	3252692	1	Spanish Language (CE Spec)	
205	3820001	4	Rivet	
206	4420051	43 in/1.1m	Tape	

FIGURE 1-17. SEMI-TRACK INSTALLATION

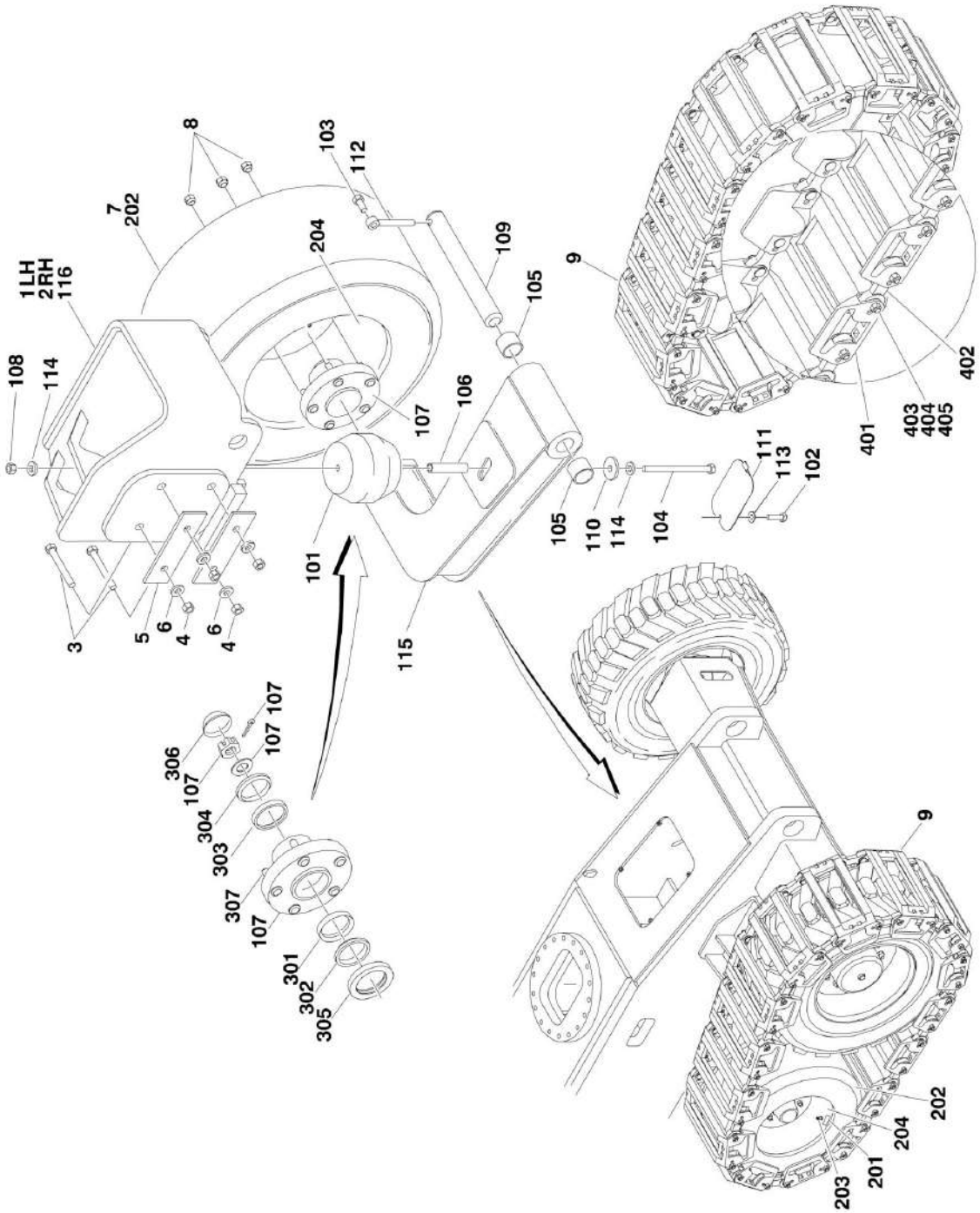

FIGURE 1-17. SEMI-TRACK INSTALLATION

ITEM	PART NUMBER	QTY	DESCRIPTION	REV
		Ref	**SEMI-TRACK INSTALLATIONS**	
	0271384	Ref	**IDLER INSTALLATION**	2
1	0271380	1	Mount, Idler (Left) (See Items 101-117 for Breakdown)	
2	0271379	1	Mount, Idler (Right) (See Items 101-117 for Breakdown)	
3	0681832	8	Bolt 1/2in-13NC x 4in (Grade 8)	
4	3271805	8	Locknut 1/2in-13NC (Grade 8)	
5	3571860	4	Plate, Spacer	
6	4891800	8	Flatwasher 1/2in Hardened	
		Ref	**TRACK INSTALLATIONS**	
	0271385	Ref	**12in Steel Track**	1
7	0270029	2	Wheel Assembly (See Items 201-204 for Breakdown)	
8	3300255	10	Nut	
9	0270086	2	Track (See Items 401-405 for Breakdown)	
		Ref	**IDLER MOUNT ASSEMBLIES**	
	0271380	Ref	**Left Side**	A
	0271379	Ref	**Right Side**	A
101	0020005	1	Absorber, Rubber Spring	
102	0641408	1	Bolt 1/4in-20NC x 1in	
103	0641808	1	Bolt 1/2in-13NC x 1in	
104	0681856	1	Bolt 1/2in-13NC x 7in (Grade 8)	
105	0961948	2	Bearing	
106	0962293	1	Bushing, Track Spring	
107	2780221	1	Hub Assembly (See Items 301-307 for Breakdown)	
108	3271805	1	Locknut 1/2in-13NC (Grade 8)	
109	3422786	1	Pin	
110	3571818	1	Plate	
111	3571833	1	Cover, Bottom	
112	3841203	1	Keeper, Pin	
113	4711400	1	Flatwasher 1/4in Thin	
114	4891800	2	Flatwasher 1/2in Hardened	
115		Ref	Arm Weldment Options:	
115	4846419	1	Left Side	
115	4846418	1	Right Side	
116		Ref	Bracket Weldment Options:	
116	4846114	1	Left Side	
116	4846126	1	Right Side	
117	0100011	AR	Compound, Locking (Not Shown)	
		Ref	**WHEEL ASSEMBLIES**	
	0270029	Ref	**12in Track**	B
201	1704586	1	Decal, Tire Pressure	
202	4520224	1	Tire	
203	4640113	1	Valve, Air	
204	4860218	1	Rim, Wheel	
	2780221	Ref	**HUB ASSEMBLY**	-
301	7012519	1	Cup, Inner Bearing	
302	7012520	1	Cone, Inner Bearing	
303	7012521	1	Cup, Outer Bearing	
304	7012522	1	Cone, Outer Bearing	
305	7012523	1	Seal	
306	1001102354	1	Cap, Dust (was p/n 7012524)	

SECTION 1 - FRAME

ITEM	PART NUMBER	QTY	DESCRIPTION	REV
307	7016360	1	Stud, Wheel 1/2in-20NF	
	2900804	1	Bearing Kit (Includes Qty 1 of Items 301-305)	
		Ref	**STEEL TRACK ASSEMBLY**	
	0270086	Ref	**12in Steel Track**	
401		Ref	Pad Options:	
401	7020279	30	12in Track Pad	
401	7020280	30	12in Track Pad Complete with Links, Bushings and Hdw	
402	7020281	AR	Link (2 Per Pad)	
403	7020282	AR	Bushing (4 Per Pad)	
404	7020283	AR	Bolt, Carriage 1/2in-20NF x 1-7/8in (4 Per Pad)	
405	7020284	AR	Nut 1/2inNF (4 Per Pad)	
405		Ref	Track Rebuild Kits Options:	
405	7020285	1	Hardware and Bushing Kit for 12in Steel Track	
405	7020286	1	Link, Hardware and Bushing Kit for 12in Steel Track	
		Ref	**TREAD ACCESSORIES (NOT SHOWN)**	
	0270180	Ref	**Soft Puck**	C
		Ref	Puck, Soft Options:	
	0240049	64	Puck (Mounts on Both Sides of Track Pad) (USA Built Machines) **(SN 0300065080 through 0300100070)**	
	0240049	64	Puck (Mounts on Both Sides of Track Pad) (Belgium Built Machines) **(Prior to SN 1300002349)**	
	0240152	32	Puck (Mounts Across Center of Track Pad) (USA Built Machines) **(SN 0300100071 through 0300123999)**	
	0240152	32	Puck (Mounts Across Center of Track Pad) (Belgium Built Machines) **(SN 1300002349 through 1300006000)**	
	3576939	32	Plate, Puck Mounting (Mounts Across Center of Track Pad) (USA Built Machines) **(SN 0300100071 through 0300123999)**	
	3576939	32	Plate, Puck Mounting (Mounts Across Center of Track Pad) (Belgium Built Machines **(SN 1300002349 through 1300006000)**	
	0270186	Ref	**Flotation Plate**	A
	0240050	64	Plate, Flotation	

SECTION 2 - TURNTABLE

FIGURE 2-1. CONTROL VALVE INSTALLATION

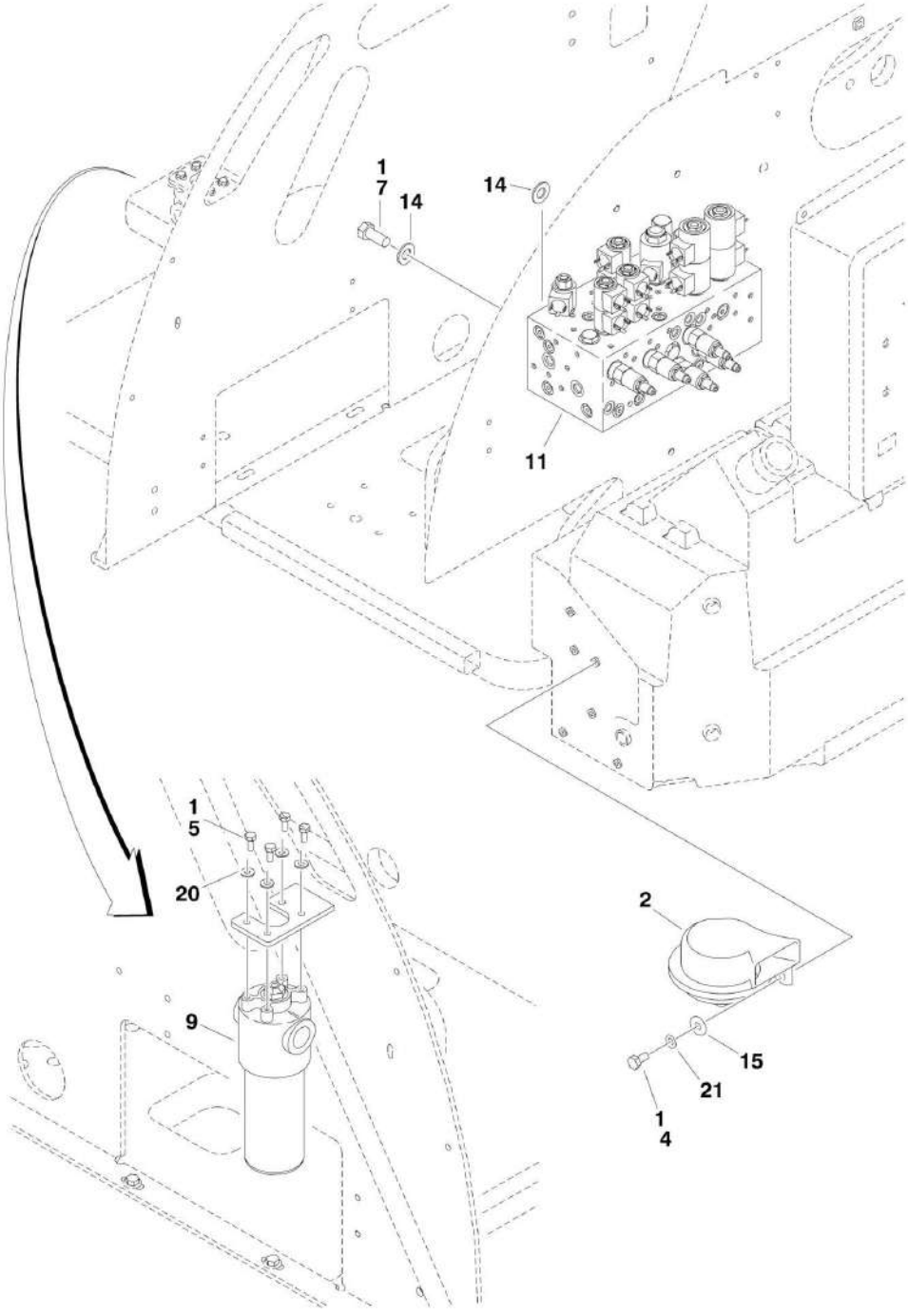

FIGURE 2-1. CONTROL VALVE INSTALLATION

ITEM	PART NUMBER	QTY	DESCRIPTION	REV
9	2120209	1	Belgium Built Machines **(SN 1300001242 through 1300006000)**	
		Ref	**VALVES INSTALLATIONS**	
		Ref	**450A Series II**	
	0271124	Ref	**USA Built Machines (SN 0300065080 through 0300087630)**	F
	0271124	Ref	**Belgium Built Machines (Prior to SN 1300001242)**	F
	0274615	Ref	**USA Built Machines (SN 0300087631 through 0300123999)**	A
	0274615	Ref	**Belgium Built Machines (SN 1300001242 through 1300006000)**	A
		Ref	**450AJ Series II**	
	0271197	Ref	**USA Built Machines (SN 0300065080 through 0300087630)**	F
	0271197	Ref	**Belgium Built Machines (Prior to SN 1300001242)**	F
	0274616	Ref	**USA Built Machines (SN 0300087631 through 0300123999)**	A
	0274616	Ref	**Belgium Built Machines (SN 1300001242 through 1300006000)**	A
1	0100011	AR	Compound, Locking	
2	0140001	1	Horn	
4	0641404	1	Bolt 1/4in-20NC x 1/2in	
5	0651405	4	Bolt 1/4in-24NF x 5/8in	
7	0641607	4	Bolt 3/8in-16NC x 7/8in	
9		Ref	Pressure Filter Assembly Options:	
9	2120163	1	Filter for USA Built Machines **(SN 0300065080 through 0300087630)**	
9	2120163	1	Belgium Built Machines **(Prior to SN 1300001242)**	
9	2120150	1	Element, Filter	
9	7020020	1	Indicator	
9	7023206	1	O-Ring, Filter	
9	7023207	1	Ring, Back-up	
9	2120209	1	Filter for USA Built Machines **(SN 0300087631 through 0300123999)**	
9	2120210	1	Element, Filter	
9	7020020	1	Indicator	
9	70000934	1	O-Ring, Filter Bowl	
11	4641176	1	Main Control Valve Assembly (See MAIN CONTROL VALVE ASSEMBLY for Breakdown)	
14	4711600	10	Flatwasher 3/8in Thin	
15	4751400	1	Flatwasher 1/4in Regular	
20	4711400	4	Flatwasher 1/4in Thin	
21	4791400	1	Starwasher 1/4in	

FIGURE 2-2. MAIN CONTROL VALVE ASSEMBLY

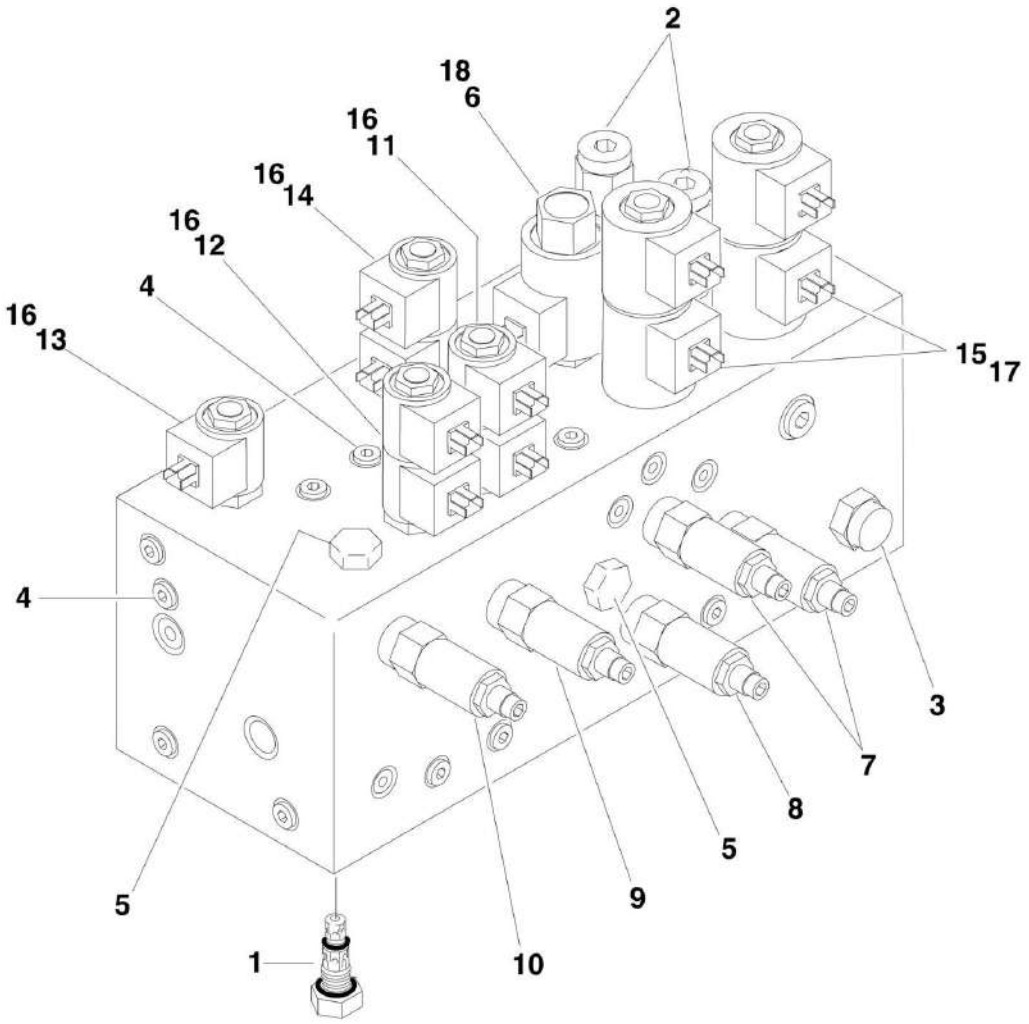

FIGURE 2-2. MAIN CONTROL VALVE ASSEMBLY

ITEM	PART NUMBER	QTY	DESCRIPTION	REV
	4641176	Ref	**PROPORTIONAL VALVE ASSEMBLY**	D
1	7012975	1	Cartridge, Check	
1	7012540	1	Seal Kit - 7012975 Cartridge	
2	7017482	2	Cartridge	
2	70003649	2	Seal Kit - 7017482 Cartridge (was p/n 7012518)	
3	7023970	1	Cartridge, Flow Regulator	
3	7012953	1	Seal Kit - 7023970 Cartridge	
4	7017440	3	Cartridge, Load Shuttle	
4	7017441	3	Seal Kit - 7017440 Cartridge	
5	7010542	2	Cartridge, Load Shuttle	
5	7010543	2	Seal Kit - 7010542 Cartridge	
6	7021611	1	Cartridge (Proportional Dump)	
6	7012518	1	Seal Kit - 7021611 Cartridge	
7	7023913	2	Cartridge, Relief (Telescope and Lower Lift)	
7	7012998	2	Seal Kit - 7023913 Cartridge	
8	7017422	1	Cartridge, Relief (Steer)	
8	7012998	1	Seal Kit - 7017422 Cartridge	
9	7017421	1	Cartridge, Relief (Upper Lift)	
9	7012998	1	Seal Kit - 7017421 Cartridge	
10	7017428	1	Cartridge, Relief (Swing)	
10	7012998	1	Seal Kit - 7017428 Cartridge	
11	7023922	1	Cartridge without Coil (Upper Lift)	
11	7017402	1	Seal Kit - 7023922 Cartridge	
12	7023914	1	Cartridge without Coil (Swing)	
12	7017402	1	Seal Kit - 7023914 Cartridge	
13	7017410	1	Cartridge without Coil (Main Dump)	
13	7012967	1	Seal Kit - 7017410 Cartridge	
14	7017433	1	Cartridge without Coil (Steer)	
14	7017402	1	Seal Kit - 7017433 Cartridge	
15	7017454	2	Cartridge without Coil (Lower Lift and Telescope)	
15	7012903	2	Seal Kit - 7017454 Cartridge	
16	7012944	7	Coil	
17	7012943	4	Coil	
18	7017451	1	Coil	

FIGURE 2-3. TURNTABLE AND SWING DRIVE INSTALLATIONS

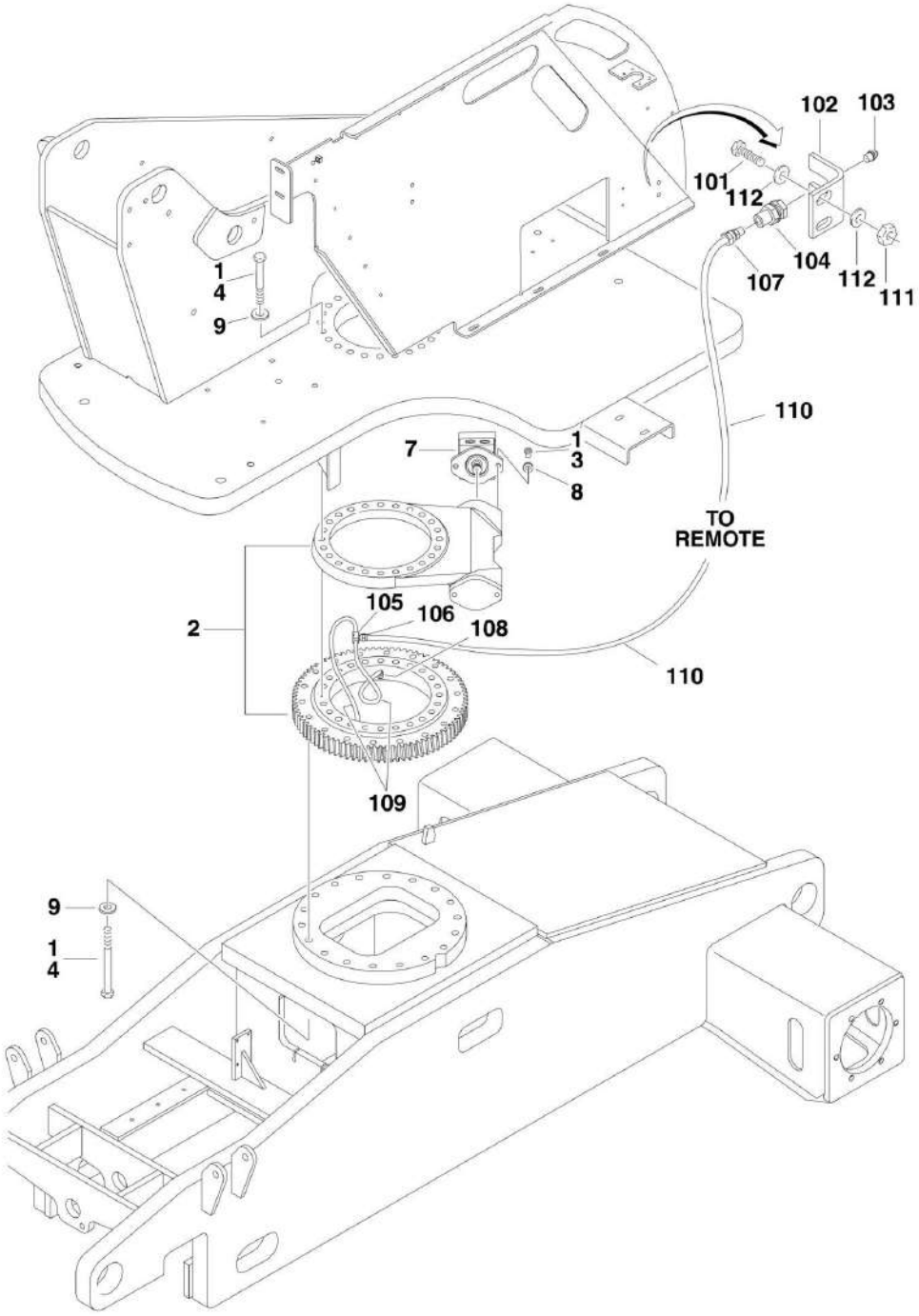

FIGURE 2-3. TURNTABLE AND SWING DRIVE INSTALLATIONS

ITEM	PART NUMBER	QTY	DESCRIPTION	REV
		Ref	**SWING DRIVE INSTALLATION OPTIONS:**	
	0271506	Ref	**USA Built Machines (SN 0300065080 through 0300069336)**	C
	0272167	Ref	**USA Built Machines (SN 0300069337 through 0300077284)**	C
	0273358	Ref	**USA Built Machines (SN 0300077285 through 0300123999)**	A
	0272167	1	**Belgium Built Machines (SN 1300000001 through 1300000352)**	C
	0273358	1	**Belgium Built Machines (SN 1300000353 through 1300006000)**	A
1	0100019	AR	Compound, Locking	
2		Ref	Swing Bearing and Rotation Box Assembly Options (See SWING BEARING AND ROTATION BOX ASSEMBLY for Breakdown):	
2	0440203	NLA	Swing Bearing and Rotation Box Assembly (USA Built Machines) (Use p/n 1001219625) **(SN 0300065080 through 0300069336)**	
2	0440255	NLA	Swing Bearing and Rotation Box Assembly (USA Built Machines) (use p/n 1001231278) **(SN 0300069337 through 0300077284)**	
2	0440272	NLA	Swing Bearing and Rotation Box Assembly (USA Built Machines) (use p/n 1001231278) **(SN 0300077285 through 0300123999)**	
2	0440255	NLA	Swing Bearing and Rotation Box Assembly (Belgium Built Machines) (use p/n 1001231278) **(SN 1300000001 through 1300000352)**	
2	0440272	NLA	Belgium Built MachinesSwing Bearing and Rotation Box Assembly (Belgium Built Machines) (use p/n 1001231278) **(SN 1300000353 through 1300006000)**	
3		Ref	Bolt Options:	
3	0681814	2	1/2in-13NC x 1-7/8in (USA Built Machines) **(SN 0300065080 through 0300069336)**	
3	0641818	2	1/2in-13NC x 2-1/4in (USA Built Machines) **(SN 0300069337 through 0300123999)**	
3	0641818	2	1/2in-13NC x 2-1/4in (Belgium Built Machines) **(SN 1300000001 through 1300006000)**	
4		Ref	Bolt Options:	
4	0682038	42	5/8in-11NC x 4-3/4in (USA Built Machines) (Turntable and Frame Bolts) **(SN 0300065080 through 0300069336)**	
4	0682040	18	5/8in-11NC x 5in (USA Built Machines) (Frame Bolts) **(SN 0300069337 through 0300123999)**	
4	0682040	18	5/8in-11NC x 5in (Belgium Built Machines) (Frame Bolts) **(SN 1300000001 through 1300006000)**	
4	0682048	24	5/8in-11NC x 6in (USA Built Machines) (Turntable Bolts) **(SN 0300069337 through 0300123999)**	
4	0682048	24	5/8in-11NC x 6in (Belgium Built Machines) (Turntable Bolts) **(SN 1300000001 through 1300006000)**	
5		Ref	Grease, Bearing (Not Shown) Options:	
5	3020029	AR	USA Built Machines **(SN 0300065080 through 0300069336)**	
5	Not Required	0	USA Built Machines **(SN 0300069337 through 0300077284)**	
5	Not Required	0	Belgium Built Machines **(SN 1300000001 through 1300000352)**	
5	2160001	AR	USA Built Machines **(SN 0300077285 through 0300123999)**	
5	2160001	AR	Belgium Built Machines **(SN 1300000353 through 1300006000)**	
7		Ref	Swing Motor Assembly Options (See SWING MOTOR ASSEMBLY for Breakdown)	
7	3160278	1	USA Built Machines **(SN 0300065080 through 0300069336)**	
7	3160287	1	USA Built Machines **(SN 0300069337 through 0300123999)**	

ITEM	PART NUMBER	QTY	DESCRIPTION	REV
7	3160287	1	Belgium Built Machines **(SN 1300000001 through 1300006000)**	
8	4891800	2	Flatwasher 1/2in Hardened	
9	4892000	42	Flatwasher 5/8in Hardened	
	0258400	Ref	**REMOTE BEARING LUBE INSTALLATION**	B
101	0641609	2	Bolt 3/8in-16NC x 1-1/8in	
102		Ref	Bracket Options:	
102	0902109	1	USA Built Machines **(SN 0300065080 through 0300065537)**	
102	0902520	1	USA Built Machines **(SN 0300065538 through 0300123999)**	
102	0902520	1	Belgium Built Machines **(SN 1300000001 through 1300006000)**	
103	2160002	1	Fitting, Grease	
104	2180344	1	Fitting, Bulkhead	
105	2180822	1	Fitting, Tee	
106	2200261	1	Fitting, Coupling	
107	2220001	1	Fitting, Straight	
108	2220124	2	Fitting, Elbow	
109	2750529	2	Hose	
110	2750807	1	Hose	
111	3311605	2	Locknut 3/8in-16NC	
112	4751600	4	Flatwasher 3/8in Regular	

FIGURE 2-4. SWING MOTOR ASSEMBLY (ORIGINAL EQUIPMENT)

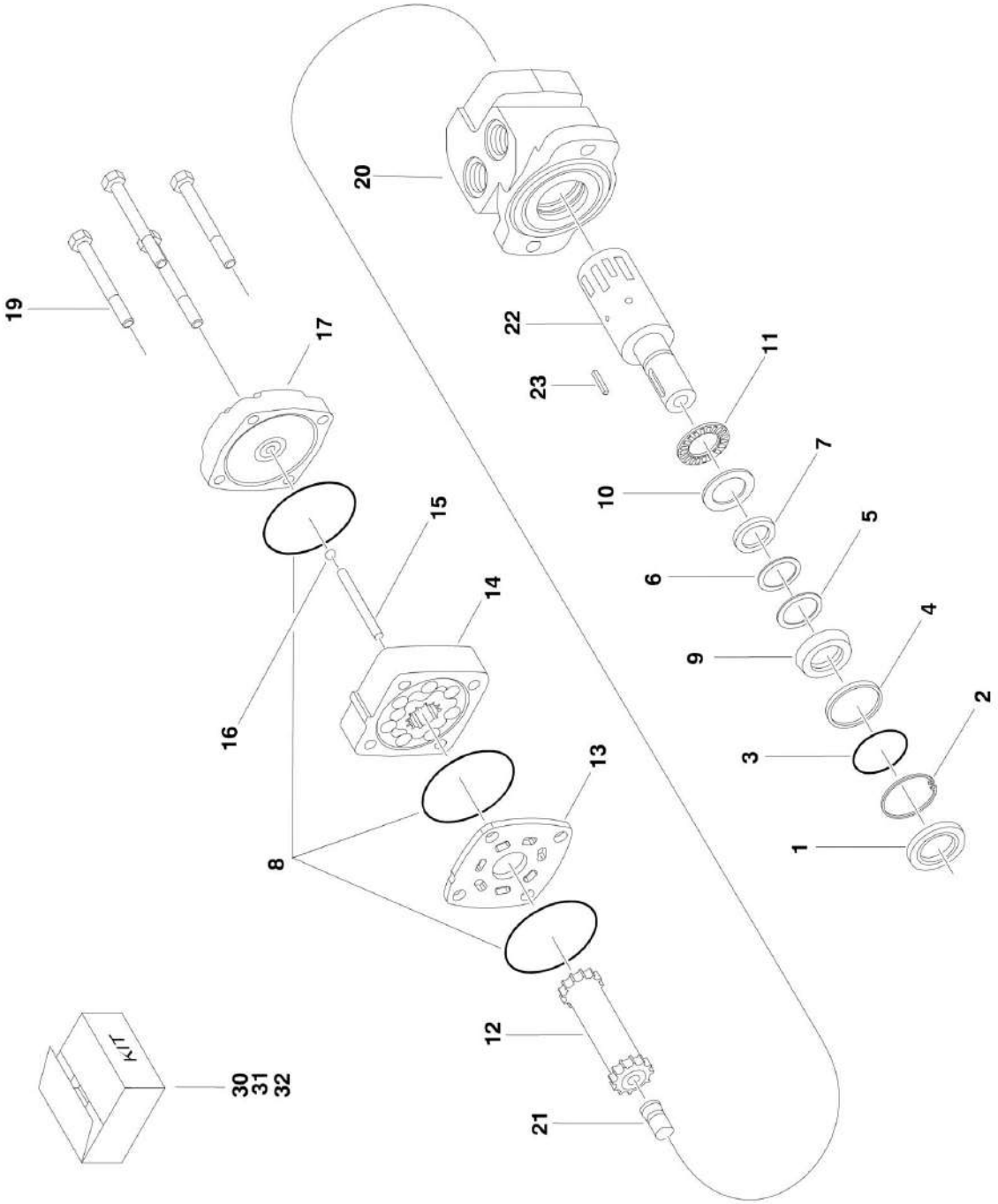

FIGURE 2-4. SWING MOTOR ASSEMBLY (ORIGINAL EQUIPMENT)

ITEM	PART NUMBER	QTY	DESCRIPTION	REV
		Ref	**SWING MOTOR ASSEMBLY**	
	3160278	Ref	**USA Built Machines (SN 0300065080 through 0300069336)**	A
	3160287	Ref	**USA Built Machines (SN 0300069337 through 0300123999)**	A
	3160287	Ref	**Belgium Built Machines (SN 1300000001 through 1300006000)**	A
		Ref	**Note: Original Equipment motor p/n 3160287 may have been replaced with Service Replacement motor p/n 1001105455. Visually identify motor before ordering parts. Service Replacement motor shown on next figure.**	
1	7005881	1	Seal, Dust	
2	7005881	1	Ring, Retaining	
3	7005881	1	Shim, Metal Back-Up	
4	7005881	1	Seal, High Pressure	
5	7005881	1	Shim, Metal Back-Up	
6	7005881	1	Shim, Teflon Back-Up	
7	7005881	1	Seal, Shaft	
8	7005881	3	Seal, Body	
9	7005882	1	Washer, Carrier	
10	7005882	1	Thrustwasher	
11		Ref	Bearing, Thrust	
11	7016422	1	USA Built Machines **(SN 0300065080 through 0300069336)**	
11	3160287	1	USA Built Machines **(SN 0300069337 through 0300123999)**	
11	3160287	1	Belgium Built Machines **(SN 1300000001 through 1300006000)**	
12		Ref	Link, Drive	
12	7016429	1	USA Built Machines **(SN 0300065080 through 0300069336)**	
12	7005889	1	USA Built Machines **(SN 0300069337 through 0300123999)**	
12	7005889	1	Belgium Built Machines **(SN 1300000001 through 1300006000)**	
13		Ref	Plate, Wear	
13	7016423	1	USA Built Machines **(SN 0300065080 through 0300069336)**	
13	3160287	1	USA Built Machines **(SN 0300069337 through 0300123999)**	
13	3160287	1	Belgium Built Machines **(SN 1300000001 through 1300006000)**	
14		Ref	Rotor Set Assembly	
14	7016428	1	USA Built Machines **(SN 0300065080 through 0300069336)**	
14	7016432	1	USA Built Machines **(SN 0300069337 through 0300123999)**	
14	7016432	1	Belgium Built Machines **(SN 1300000001 through 1300006000)**	
15		Ref	Pin, Drive Link	
15	7005891	1	USA Built Machines **(SN 0300065080 through 0300069336)**	
15	7016433	1	USA Built Machines **(SN 0300069337 through 0300123999)**	
15	7016433	1	Belgium Built Machines **(SN 1300000001 through 1300006000)**	
16	See Note	1	Ball (Note: Not available for purchase)	
17		Ref	Cover, End	
17	7016424	1	USA Built Machines **(SN 0300065080 through 0300069336)**	
17	3160287	1	USA Built Machines **(SN 0300069337 through 0300123999)**	
17	3160287	1	Belgium Built Machines **(SN 1300000001 through 1300006000)**	
18	See Note	1	Nameplate (Note: Not available for purchase)	
19		Ref	Bolt Set (Includes 4 Bolts)	
19	7016430	1	USA Built Machines **(SN 0300065080 through 0300069336)**	

SECTION 2 - TURNTABLE

ITEM	PART NUMBER	QTY	DESCRIPTION	REV
19	7016434	1	USA Built Machines **(SN 0300069337 through 0300123999)**	
19	7016434	1	Belgium Built Machines **(SN 1300000001 through 1300006000)**	
20	See Note	1	Housing (Note: Use Item 32)	
21	See Note	1	Plug, Cooling (Note: Use Item 32)	
22	7005843	1	Shaft	
23	7005887	1	Key	
30	7005881	1	Seal Kit (Includes Items 1-8)	
31	7005882	1	Washer Kit (Includes Items 9 & 10)	
32		Ref	Housing/Shaft Kit Options (Includes Items 20-23):	
32	7016431	1	USA Built Machines **(SN 0300065080 through 0300069336)**	
32	7016435	1	USA Built Machines **(SN 0300069337 through 0300123999)**	
32	7016435	1	Belgium Built Machines **(SN 1300000001 through 1300006000)**	

FIGURE 2-5. SWING MOTOR ASSEMBLY (SERVICE REPLACEMENT)

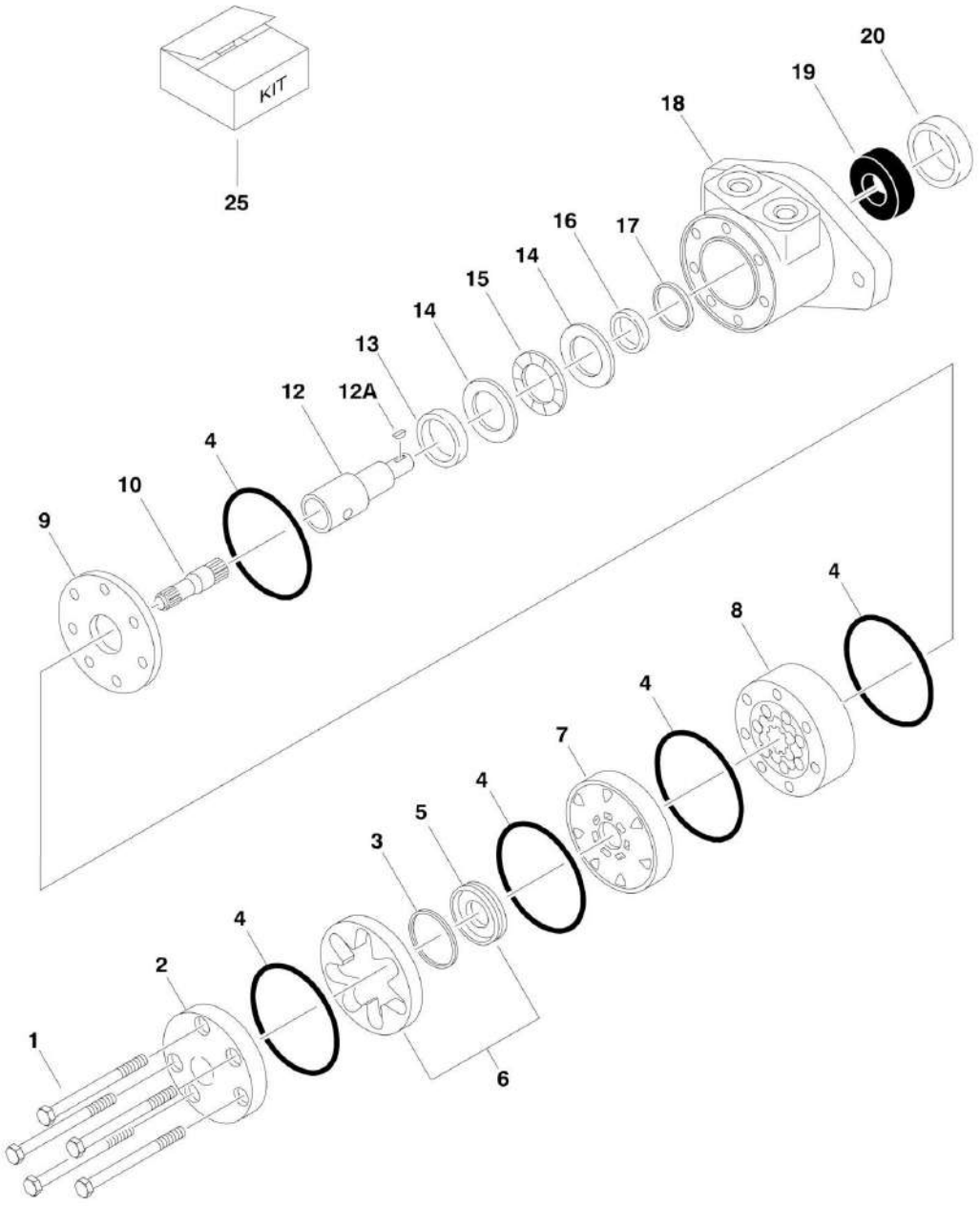

FIGURE 2-5. SWING MOTOR ASSEMBLY (SERVICE REPLACEMENT)

ITEM	PART NUMBER	QTY	DESCRIPTION	REV
	1001105455	Ref	**SWING MOTOR ASSEMBLY**	A
		Ref	**Note: Original Equipment motor p/n 3120287 may have been replaced with Service Replacement motor p/n 1001105455. Visually identify motor before ordering parts.**	
1	See Note	5	Bolt (Note: Not available for purchase)	
2	7004035	1	Cover, End	
3	7023318	1	Seal, Commutator	
4	7004036	5	O-Ring	
5	7024453	1	Commutator	
6	7024453	1	Commutator and Ring Assembly (Includes Items 5)	
7	7024379	1	Manifold	
8	70002206	1	Rotor Set	
9	7024380	1	Plate, Wear	
10	70002207	1	Link, Drive	
12	70000088	1	Shaft, Coupling	
12A	70000089	1	Key	
13	7024381	1	Bushing, Inner	
14	7004043	1	Thrustwasher	
15	7004044	1	Bearing, Thrust	
16	7004049	1	Seal, Inner Shaft	
17	7004045	1	Ring, Backup	
18	See Note	1	Housing (Note: Not Available - Purchase Complete Motor)	
19	7024390	1	Bearing	
20	7004047	1	Seal, Outer Shaft	
25	7024389	1	Seal Kit (Includes Items 3, 4, 16, 17 & 20)	

FIGURE 2-6. SWING BEARING AND ROTATION BOX ASSEMBLY (ORIGINAL EQUIPMENT)

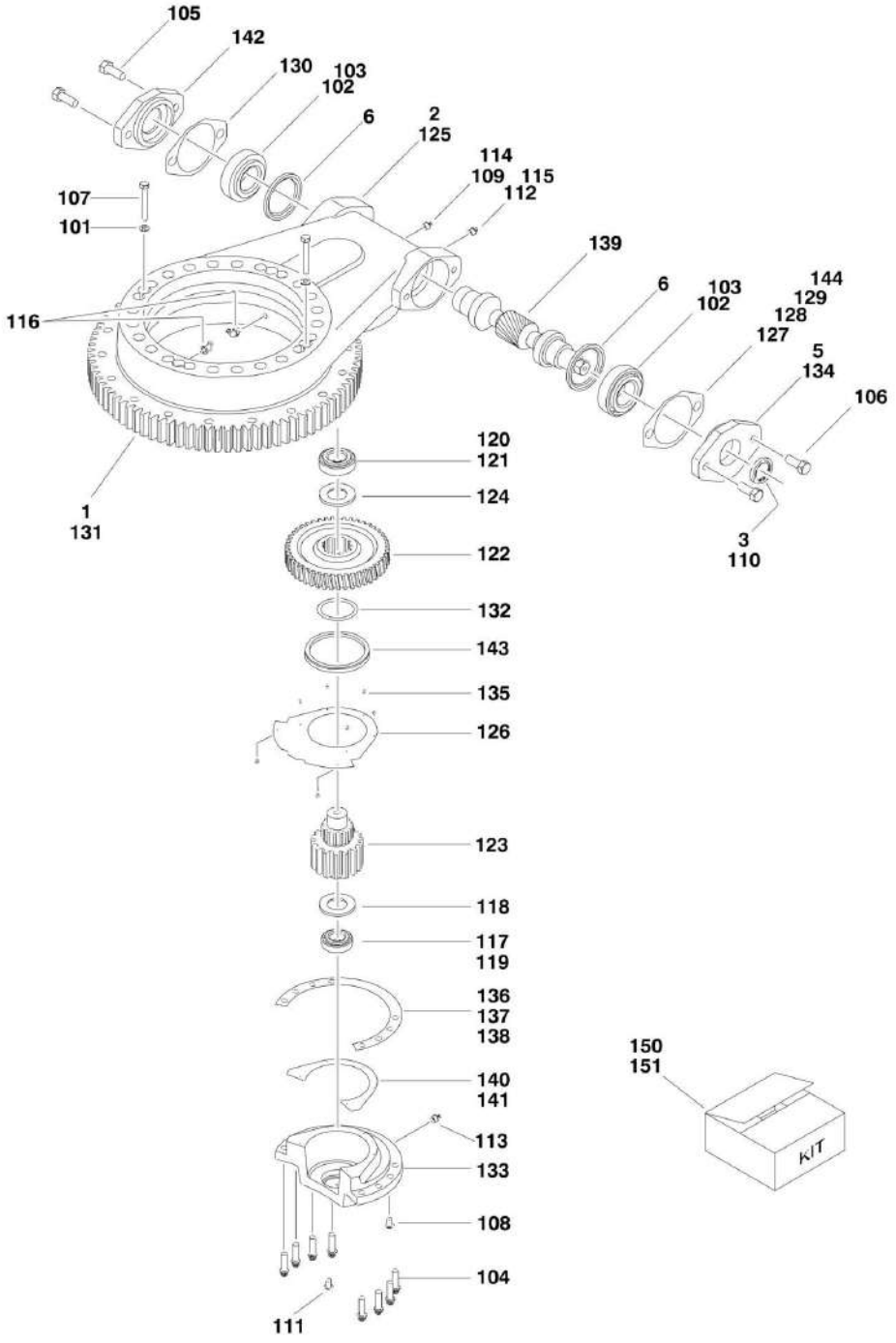

FIGURE 2-6. SWING BEARING AND ROTATION BOX ASSEMBLY (ORIGINAL EQUIPMENT)

ITEM	PART NUMBER	QTY	DESCRIPTION	REV
	0440203	Ref	**SWING BEARING AND ROTATION BOX ASSEMBLY (USA BUILT MACHINES) (SN 0300065080 through 0300069336)**	E
1	7012596	1	Bearing, Turntable	
2	7012597	1	Swing Rotation Box Assembly (Includes all internal components. No other internal available except seals.)	
3		Ref	Seal, Outer Options - Capped End:	
3	7012654	1	1.75in O.D.	
3	7016676	1	2.063in O.D.	
4	7012655	1	Seal, Outer - Motor End	
5	7023484	1	Cap, End (Closed End)	
6	7027730	2	Seal, Inner	
		Ref	**SWING BEARING AND ROTATION BOX ASSEMBLY**	
	0440255	Ref	**USA Built Machines (SN 0300069337 through 0300077284)**	
	0440272	Ref	**USA Built Machines (SN 0300077285 through 0300123999)**	
	0440255	1	**Belgium Built Machines (SN 1300000001 through 1300000352)**	
	0440272	1	**Belgium Built Machines (SN 1300000353 through 1300006000)**	
101	4891500	2	Flatwasher 5/16in Hardened	
102	7026042	2	Cup, Bearing	
103	7026043	2	Cone, Bearing	
104	0681610	8	Bolt 3/8in-16NC x 1-1/4in (Grade 8)	
105	0641808	2	Bolt 1/2in-13NC x 1in	
106	0641810	2	Bolt 1/2in-13NC x 1-1/4in	
107	0641520	2	Bolt 5/16in-18NC x 2-1/2in	
108	See Note	1	Plug 1/8in (Note: Not Available - Purchase Locally)	
109	See Note	1	Plug (Note: Not Available - Purchase Locally)	
110	7026060	1	Seal, Oil	
111	See Note	1	Plug 1/4in (0440255 Bearing Only) (Note: Not Available - Purchase Locally)	
112	See Note	2	Cap (Note: Not available for purchase)	
113	See Note	1	Fitting, Grease (Note: Not available for purchase)	
114	7026044	1	Bushing, Reducer	
115	7027358	1	Fitting, Grease	
116	See Note	2	Fitting, Grease (0440255 Bearing Only) (Note: Not Available - Purchase Locally)	
117	7026045	1	Cup, Bearing	
118	7026046	1	Ring, Grease	
119	7026047	1	Cone, Bearing	
120	7026048	1	Cup, Bearing	
121	7026049	1	Cone, Bearing	
122	7026050	1	Worm-Gear	
123	7026051	1	Pinion, Output	
124	7026052	1	Spacer, Washer	
125	See Note	1	Housing (Note: Not Available - Purchase Complete Assy)	
126	7026053	1	Cover, Gear	
127	7026059	Ref	Shim, Brown (.010) Options:	
127	7026059	2	0440255 Bearing	
127	7026059	AR	0440272 Bearing	
128	7026059	Ref	Shim, Clear (.0075) Options:	
128	7026059	2	0440255 Bearing	
128	7026059	AR	0440272 Bearing	

SECTION 2 - TURNTABLE

ITEM	PART NUMBER	QTY	DESCRIPTION	REV
129	7026059	Ref	Shim, Blue (.005) Options:	
129	7026059	3	0440255 Bearing	
129	7026059	AR	0440272 Bearing	
130	7026059	Ref	Shim, Yellow (.020) Options:	
130	7026059	2	0440255 Bearing	
130	7026059	AR	0440272 Bearing	
131		Ref	Bearing, Turntable Options:	
131	7026054	1	0440255 Bearing	
131	70000042	1	0440272 Bearing	
132	7026060	1	O-Ring	
133	7026055	1	Cap, Gear	
134		Ref	Cap, Worm Options:	
134	7026056	1	0440255 Bearing	
134	7027354	1	0440272 Bearing	
135	70000681	8	Screw #6-32 x 3/8in	
136	7026059	Ref	Shim, Natural (.0075) Options:	
136	7026059	4	0440255 Bearing	
136	7026059	AR	0440272 Bearing	
137	7026059	Ref	Shim, Blue (.005) Options:	
137	7026059	4	0440255 Bearing	
137	7026059	AR	0440272 Bearing	
138	7026059	Ref	Shim, Green (.003) Options:	
138	7026059	4	0440255 Bearing	
138	7026059	AR	0440272 Bearing	
139	7026057	1	Worm, Ground	
140	7026059	Ref	Shim, Blue (.005) Options:	
140	7026059	3	0440255 Bearing	
140	7026059	AR	0440272 Bearing	
141	7026059	Ref	Shim, Yellow (.020) Options:	
141	7026059	2	0440255 Bearing	
141	7026059	AR	0440272 Bearing	
142		Ref	Adapter, Motor Options:	
142	7026058	1	0440255 Bearing	
142	7027356	1	0440272 Bearing	
143	7026060	1	Seal, Face	
144	7026059	Ref	Shim, Green (.003) Options:	
144	7026059	0	0440255 Bearing	
144	7026059	AR	0440272 Bearing	
150	7026060	1	Seal Kit (Includes Items 110, 132 & 143)	
151	7026059	1	Shim Kit (Includes Items 127-130, 136-138, 140-141 & 144)	

FIGURE 2-7. SWING BEARING AND ROTATION BOX ASSEMBLY (SERVICE REPLACEMENT FOR 0440203) (SN 0300065080 through 0300069336)

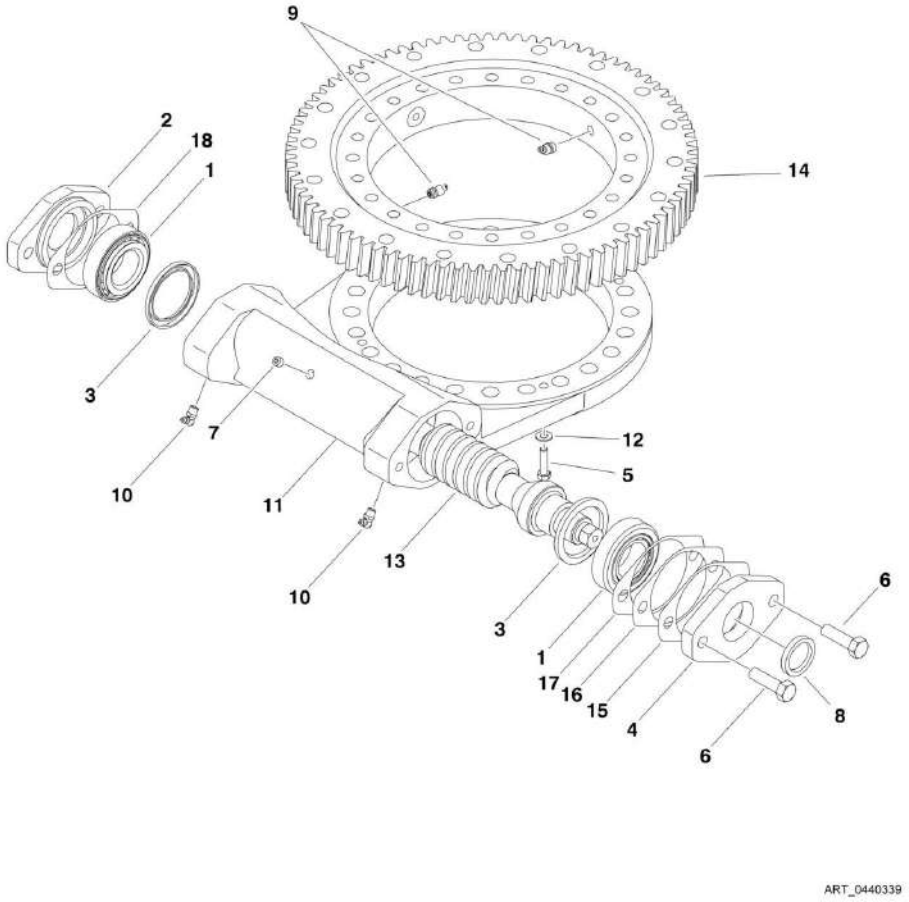

FIGURE 2-7. SWING BEARING AND ROTATION BOX ASSEMBLY (SERVICE REPLACEMENT FOR 0440203) (SN 0300065080 through 0300069336)

ITEM	PART NUMBER	QTY	DESCRIPTION	REV
	0440339	Ref	SWING BEARING AND ROTATION BOX ASSEMBLY	C
1	7026042	2	Bearing, Cup	
1	7026043	2	Bearing, Cone	
2	7027356	1	Adapter, Motor	
3	7027361	2	Seal	
4	7027354	1	Cap, End	
5	0641510	2	Bolt 5/16 x 1 1/4	
6	0641812	2	Bolt 1/2in-13NC x 1 1/2in	
7	70000865	1	Plug	
8	7027360	1	Seal	
9	7027359	2	Straight Fitting, Grease	
9	2160003	2	Fitting, Grease - 45	
10	7027358	2	Fitting, Grease - 90	
11	Not Available	1	Housing	
12	4891500	2	Washer 5/16 (Hardened)	
13	7027363	1	Gear, Worm	
14	70000868	1	Ring, Bearing	
15	7027352	AR	Gasket (.010 - Brown)	
16	7027351	AR	Gasket (.0075 - Clear)	
17	7027350	AR	Gasket (.005 - Blue)	
18	7027353	1	Gasket (.020 - Yellow)	

FIGURE 2-8. SWING BEARING AND ROTATION BOX ASSEMBLY (SERVICE REPLACEMENT FOR 0440203 & 0440339) (SN 0300065080 through 0300069336)

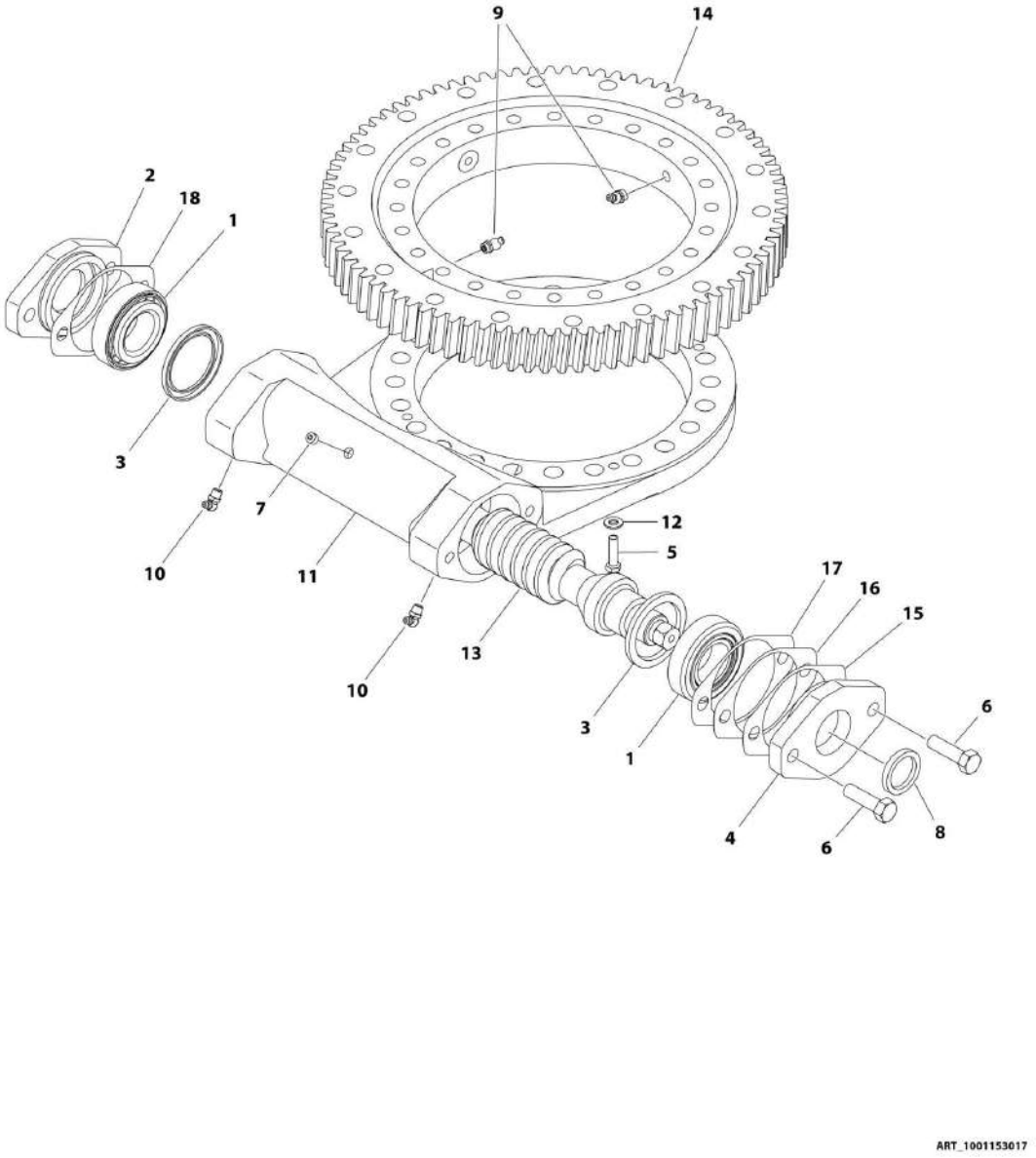

FIGURE 2-8. SWING BEARING AND ROTATION BOX ASSEMBLY (SERVICE REPLACEMENT FOR 0440203 & 0440339) (SN 0300065080 through 0300069336)

ITEM	PART NUMBER	QTY	DESCRIPTION	REV
	1001153017	Ref	SWING BEARING ASSEMBLY	B
1	7026042	2	Bearing, Cup	
1	7026043	2	Bearing, Cone	
2	7027356	1	Adapter, Motor	
3	7027361	2	Seal	
4	7027354	1	Cap, End	
5	0641510	2	Bolt, 5/16-18 x 1-1/4	
6	0641812	2	Bolt, 1/2-13 x 1-1/2	
7	70000865	1	Plug	
8	7027360	1	Seal	
9	7027359	2	Fitting, Grease - Straight	
9	2160003	2	Fitting, Grease - 45	
10	7027358	2	Fitting, Grease - 90	
11	See Note	NSS	Housing (Note: Not Sold Separate - Use 1001153017)	
12	4891500	1	Washer, 5/16	
13	7027363	1	Gear, Worm	
14	70004159	1	Ring Gear	
15	7027352	AR	Gasket (.010 - Brown)	
16	7027351	AR	Gasket (.0075 - Clear)	
17	7027350	AR	Gasket (.005 - Blue)	
18	7027353	1	Gasket (.020 - Yellow)	

FIGURE 2-9. SWING BEARING AND ROTATION BOX ASSEMBLY (SERVICE REPLACEMENT FOR 0440255 & 0440272) (SN 0300069337 through 0300123999, SN 1300000001 through 1300006000)

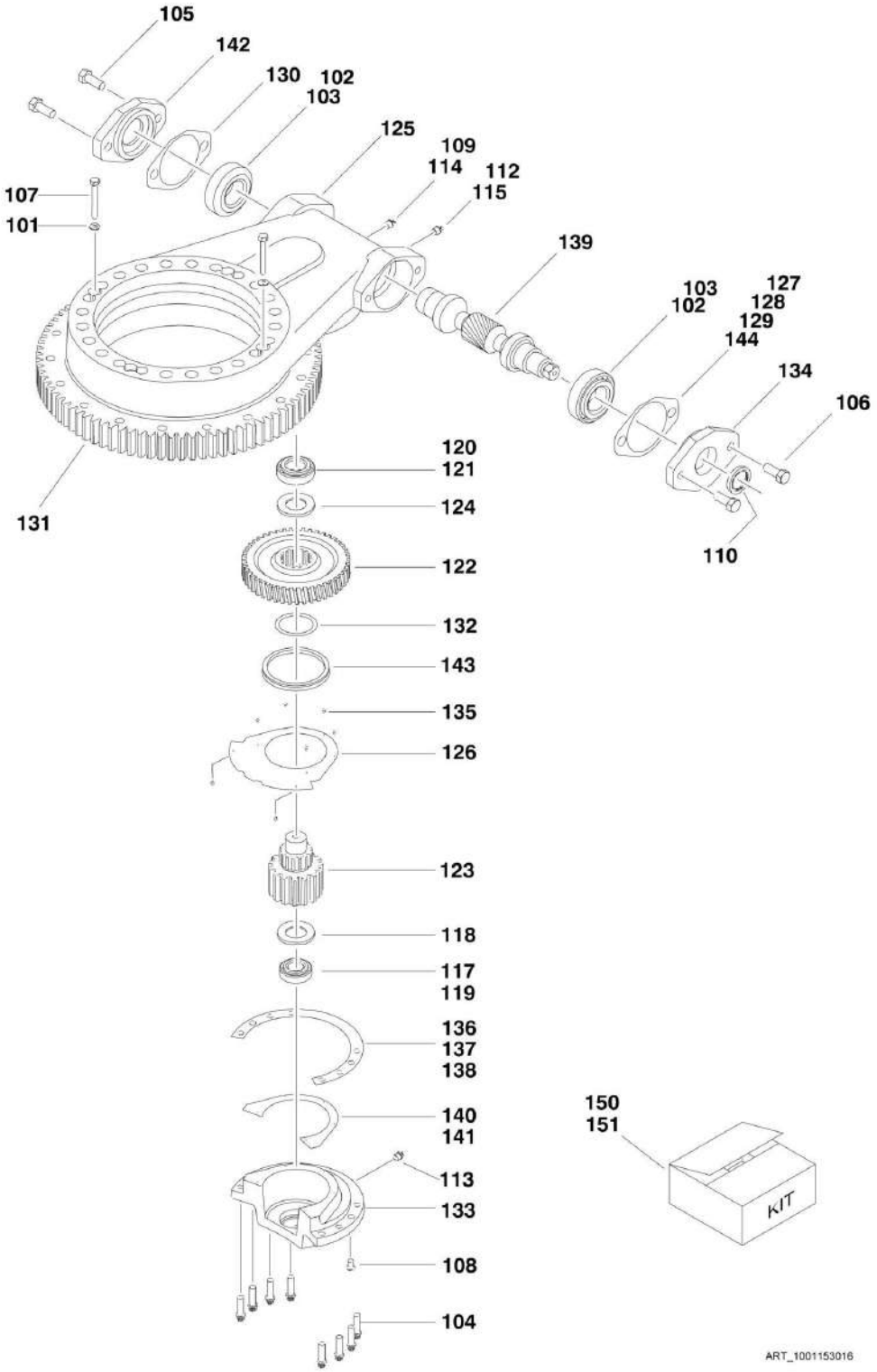

FIGURE 2-9. SWING BEARING AND ROTATION BOX ASSEMBLY (SERVICE REPLACEMENT FOR 0440255 & 0440272) (SN 0300069337 through 0300123999, SN 1300000001 through 1300006000)

ITEM	PART NUMBER	QTY	DESCRIPTION	REV
	1001153016	Ref	**SWING BEARING AND ROTATION BOX ASSEMBLY (JING WEI)**	C
101	4891500	2	Flatwasher 5/16in Hardened	
102	7026042	2	Cup, Bearing	
103	7026043	2	Cone, Bearing	
104	0681610	8	Bolt 3/8 x 1-1/4 Grade 8	
105	0641808	2	Bolt 1/2 x 1	
106	0641810	2	Bolt 1/2 x 1-1/4	
107	0641520	2	Bolt 5/16in-18NC x 2-1/2in	
108	See Note	1	Plug 1/8in (Note: Not Available - Purchase Locally)	
109	See Note	1	Plug (Note: Not Available - Purchase Locally)	
110	7026060	1	Seal, Oil	
112	See Note	2	Cap (Note: Not Available - Purchase Complete Assembly)	
113	See Note	1	Fitting, Grease (Note: Not Available - Purchase Locally)	
114	7026044	1	Bushing, Reducer	
115	7027358	1	Fitting, Grease	
117	7026045	1	Cup, Bearing	
118	7026046	1	Ring, Grease	
119	7026047	1	Cone, Bearing	
120	7026048	1	Cup, Bearing	
121	7026049	1	Cone, Bearing	
122	7026050	1	Worm-Gear	
123	7026051	1	Pinion, Output	
124	7026052	1	Spacer, Washer	
125	See Note	1	Housing (Note: Not Available - Purchase Complete Assembly)	
126	7026053	1	Cover, Gear	
127	7026059	AR	Shim, Brown (.010in)	
128	7026059	AR	Shim, Clear (.0075in)	
129	7026059	AR	Shim, Blue (.005in)	
130	7026059	AR	Shim, Yellow (.020in)	
131	70004158	1	Bearing, Turntable	
132	7026060	1	O-Ring	
133	7026055	1	Cap, Gear	
134	7027354	1	Cap, Worm	
135	70000681	8	Screw #6-32 x 3/8in	
136	7026059	AR	Shim, Natural (.0075)	
137	7026059	AR	Shim, Blue (.005)	
138	7026059	AR	Shim, Green (.003)	
139	7026057	1	Gear, Worm	
140	7026059	AR	Shim, Blue (.005)	
141	7026059	AR	Shim, Yellow (.020)	
142	7027356	1	Adapter, Motor	
143	7026060	1	Seal, Face	
144	7026059	AR	Shim, Green (.003)	
150	7026060	1	Seal Kit (Includes Items 110, 132 & 143)	
151	7026059	1	Shim Kit (Includes Items 127-130, 136-138, 140-141 & 144)	

FIGURE 2-10. SWING BEARING AND ROTATION BOX ASSEMBLY (SERVICE REPLACEMENT FOR 0440255, 0440272 & 1001153016) (SN 0300069337 through 0300123999, SN 1300000001 through 1300006000)

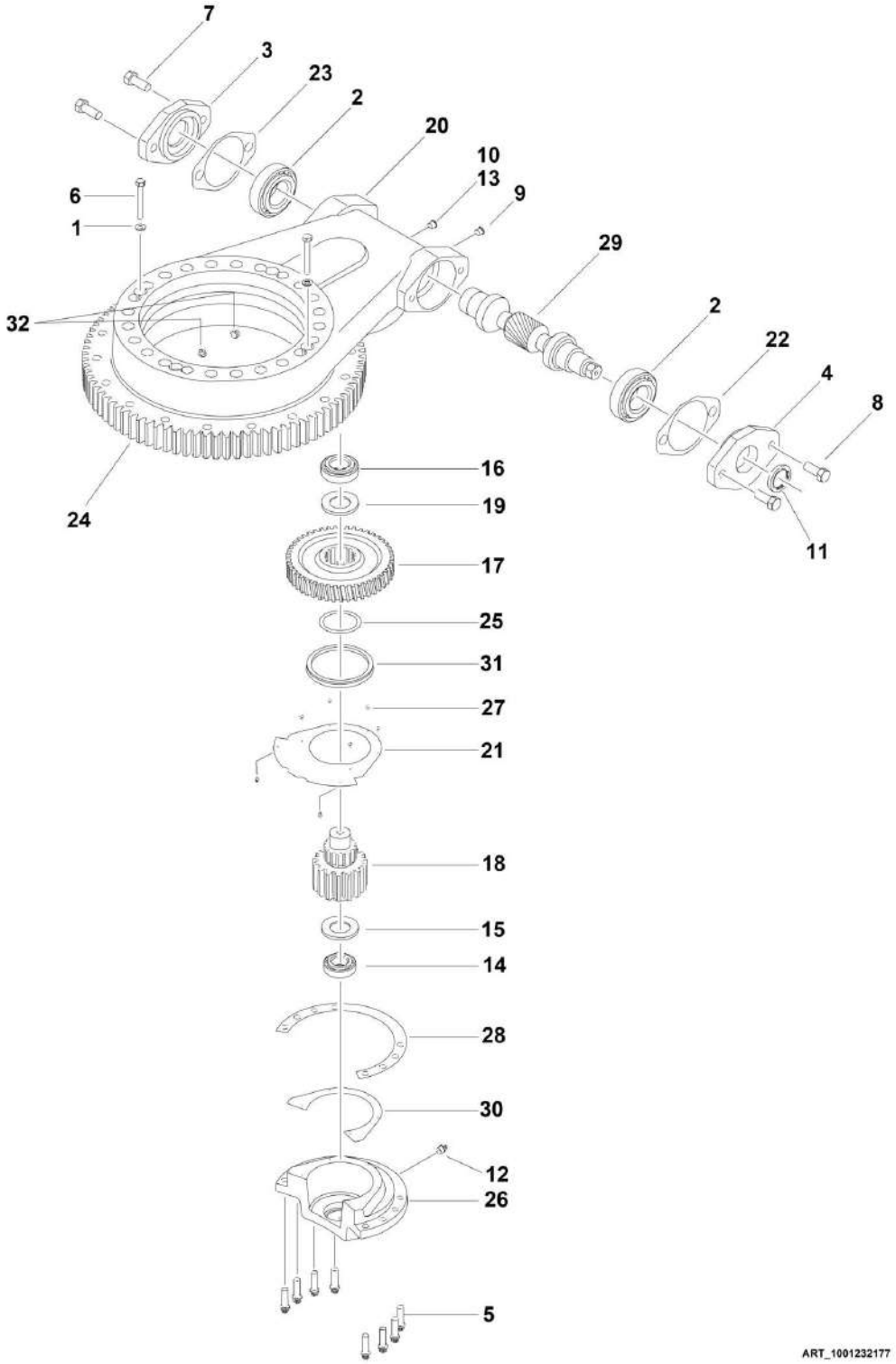

FIGURE 2-10. SWING BEARING AND ROTATION BOX ASSEMBLY (SERVICE REPLACEMENT FOR 0440255, 0440272 & 1001153016) (SN 0300069337 through 0300123999, SN 1300000001 through 1300006000)

ITEM	PART NUMBER	QTY	DESCRIPTION	REV
	1001231277	Ref	SWING BEARING AND ROTATION BOX ASSEMBLY	B
1	7026041	2	Flatwasher 5/16	
2	7026042	2	Cup, Bearing	
2	7026043	2	Cone, Bearing	
3	7027356	1	Adapter, Motor	
4	7027354	1	Cap, Worm	
5	70006739	8	Bolt 3/8 x 1-1/4	
6	70003138	2	Bolt 5/16 x 2-1/2	
7	70002647	2	Bolt 1/2 x 1	
8	70002648	1	Bolt 1/2 x 1-1/4	
9	70000865	2	Plug	
10	70002649	1	Vent, Pressure	
11	7027360	1	Seal, Oil	
12	70002651	1	Fitting, Grease	
13	7026044	1	Bushing, Reducer	
14	7026045	1	Cup, Bearing	
14	7026047	1	Cone, Bearing	
15	7026046	1	Ring, Grease	
16	7026048	1	Cup, Bearing	
16	7026049	1	Cone, Bearing	
17	7026050	1	Worm-Gear	
18	7026051	1	Pinion, Output	
19	7026052	1	Spacer, Washer	
20	See Note	1	Housing (Note: Not Available - Purchase Complete Assy)	
21	7026053	1	Cover, Gear	
22	7027352	AR	Shim, Brown (.010)	
22	7027351	AR	Shim, Clear (.0075)	
22	7027350	AR	Shim, Blue (.005)	
23	70006740	1	Shim, Yellow(.020)	
24	70006741	1	Shim, Blue (.005)	
25	70004254	1	O-Ring	
26	7026055	1	Cap, Gear	
27	70000681	8	Screw #6 x 3/8	
28	70004259	AR	Shim, Natural (.0075	
28	70004258	AR	Shim, Blue (.005)	
28	70004257	AR	Shim, Green (.003)	
29	7026057	1	Worm, Ground	
30	70004260	1	Shim, Blue (.005)	
30	70004261	1	Shim, Yellow (.020)	
31	70004262	1	Seal, Oil	
32	70006742	1	Plug	

FIGURE 2-11. USA BUILT MACHINES/CATERPILLAR ENGINE INSTALLATION

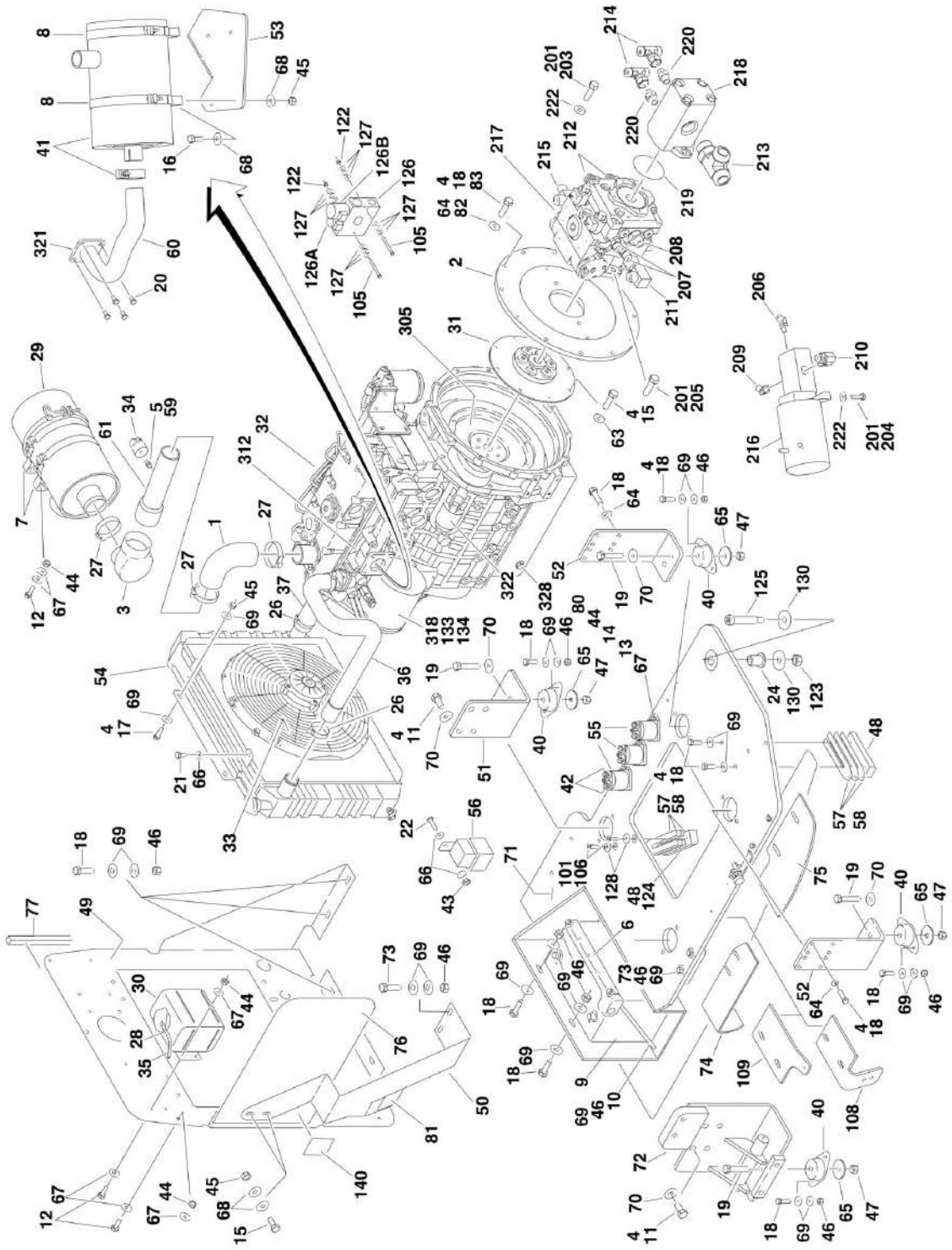

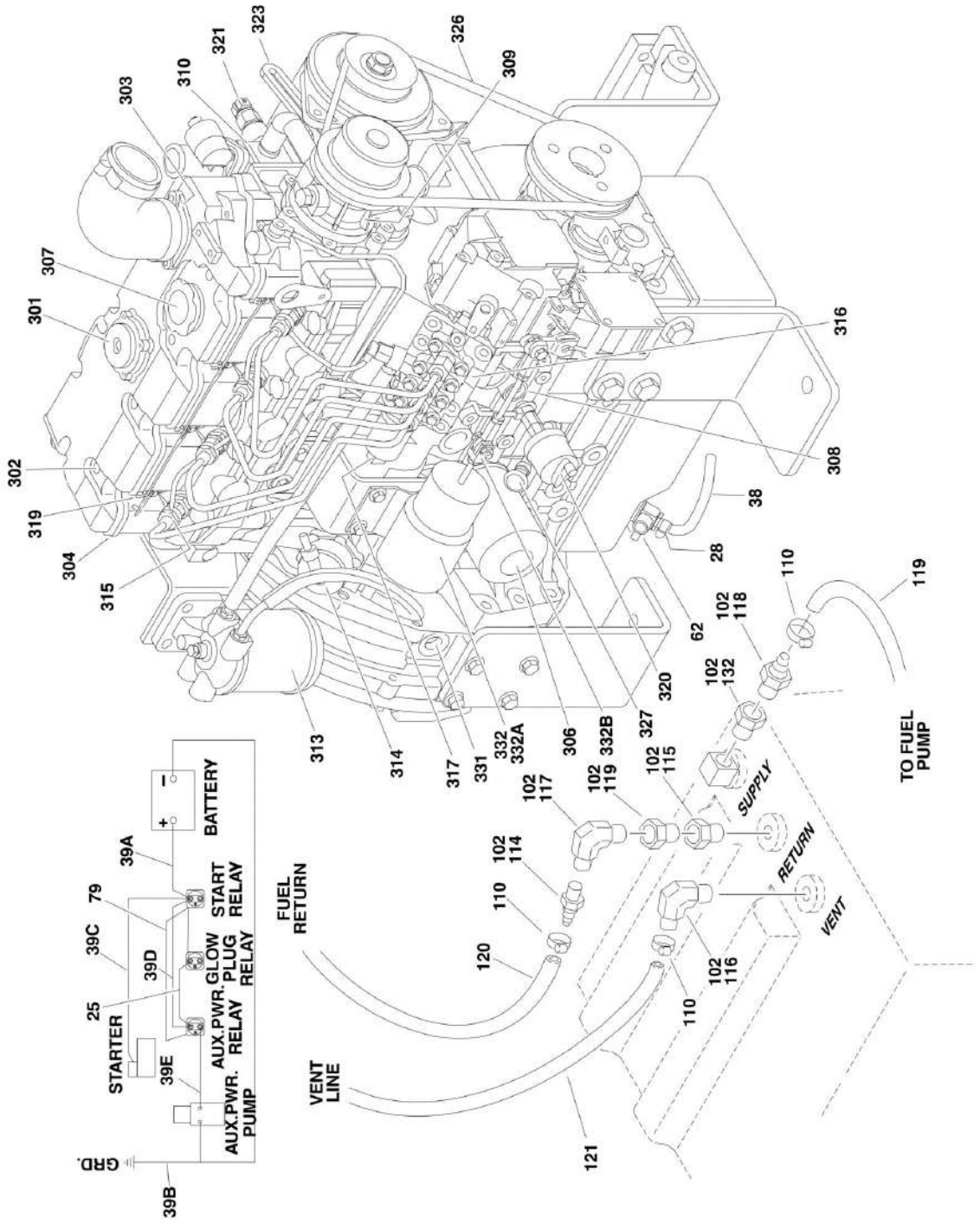

BATTERY
START RELAY
GLOW PLUG RELAY
AUX.PWR. RELAY
AUX.PWR. PUMP
STARTER
GRD.
FUEL RETURN
VENT LINE
SUPPLY
RETURN
VENT
TO FUEL PUMP

FIGURE 2-11. USA BUILT MACHINES/CATERPILLAR ENGINE INSTALLATION

ITEM	PART NUMBER	QTY	DESCRIPTION	REV
		Ref	**CATERPILLAR ENGINE ASSEMBLY**	
	0272922	Ref	**Caterpillar Engine Assembly (SN 0300065080 through 0300087630)**	D
	2000315	Ref	**Caterpillar Engine Assembly (SN 0300087631 through 0300123999)**	B
	2000388	Ref	**Arctic Machines**	C
1	2180482	1	Elbow, Rubber	
2	0080181	1	Adaptor, Pump Mounting Plate	
3	0080201	1	Elbow, Rubber	
4	0100011	AR	Compound, Locking	
5	0100020	AR	Sealant	
6	0181727	1	Angle, Battery Hold-Down	
7	0340041	2	Band, Air Cleaner Mounting	
8	0340046	2	Band, Muffler Mounting	
9	0400075	1	Battery, 12V	
10	0630498	2	Bolt, Battery Hold-Down	
11	0630569	8	Bolt M14 x 30mm	
12	0641406	8	Bolt 1/4in-20NC x 3/4in	
13	0641408	5	Bolt 1/4in-20NC x 1in	
14	0641410	1	Bolt 1/4in-20NC x 1-1/4in	
15	0641506	10	Bolt 5/16in-18NC x 3/4in	
16	0641507	4	Bolt 5/16in-18NC x 7/8in	
17	0641609	4	Bolt 3/8in-16NC x 1-1/8in	
18	0641610	34	Bolt 3/8in-16NC x 1-1/4in	
19	0641820	4	Bolt 1/2in-13NC x 2-1/2in	
20	0700808	4	Bolt M8 x 16mm	
21	0721004	4	Screw #10-24NC x 1/2in	
22	0721006	1	Screw #10-24NC x 3/4in	
23	0741610	2	Screw, Countersunk 3/8in-16NC x 1-1/4in	
24	0962172	1	Bushing, Flanged	
25	1060904	1	Cable, Jumper	
26	1320012	4	Clamp	
27	1320016	4	Clamp	
28	1320022	3	Clamp	
29	1340060	1	Air Cleaner Assembly	
29	7012664	1	Element, Air Cleaner	
30	1580011	1	Container, Overflow	
31	1660255	1	Pump, Coupling	
32	2000195	1	Caterpillar Engine Assembly	
33	2060032	1	Fan, Electric	
34	2180798	1	Fitting, Indicator Restriction **(SN 0300065080 through 0300087630)**	
35	2720058	4 in/10cm	Hose	
36	2720507	NLA	Hose, Radiator (Top) (Use p/n 1001102308)	
37	2720508	1	Hose, Radiator (Bottom)	
38	2750532	6 in/25cm	Hose	
39	2902060	1	Battery Cable Kit	B
39A	7016817	1	Cable - Battery to Starter Relay	
39B	7027041	1	Cable - Battery and Auxiliary Pump to Ground (was p/n 7016837)	

ITEM	PART NUMBER	QTY	DESCRIPTION	REV
39C	7016834	1	Cable - Starter Relay to Starter	
39D	7016838	1	Cable - Starter Relay to Auxiliary Relay	
39E	7016820	1	Cable - Auxiliary Relay to Auxiliary Pump	
40	3200378	4	Mount, Motor	
41		Ref	Muffler Options:	
41	3220113	1	Spark Arresting Muffler	
41	70001017	1	Clamp	
41	3220154	NLA	Catalytic Muffler (Use p/n 1001107116)	
41	70002705	1	Clamp	
41	70002706	1	Plug, Brass	
42	3300220	6	Nut, Washer	
43	3311005	1	Locknut #10-24NC	
44	3311405	19	Locknut 1/4in-20NC	
45	3311505	6	Locknut 5/16in-18NC	
46	3311605	20	Locknut 3/8in-16NC	
47	3311805	4	Locknut 1/2in-13NC	
48	3340399	2	Pad, Wear	
49	3570571	1	Plate, Radiator Mount	
50	3573667	1	Plate, Radiator Support	
51	3574253	1	Plate, Engine Mounting (Front)	
52	3574259	2	Plate, Engine Mounting (Rear)	
53	3574264	NLA	Plate, Muffler Support (Use p/n 1001098525)	
54	3620046	1	Radiator	
54	7019656	1	Cap, Radiator	
55	3740067	3	Relay	
56	3740080	1	Relay	
57	4070497	4	Shim	
58	4070498	2	Shim	
59	4360392	1	Switch, Restrictor Indicator **(SN 0300065080 through 0300087630)**	
60	4568743	1	Pipe, Exhaust	
61		Ref	Tube, Air Intake Options:	
61	4558765	1	Tube, Air Intake **(SN 0300065080 through 0300087630)**	
61	4569176	1	Tube, Air Intake **(SN 0300087631 through 0300123999)**	
62	4641272	1	Valve, Oil Drain	
63	4711500	8	Flatwasher 5/16in Thin	
64	4711600	18	Flatwasher 3/8in Thin	
65	4740274	4	Washer, Snubbing	
66	4751000	6	Flatwasher #10 Regular	
67	4751400	38	Flatwasher 1/4in Regular	
68	4751500	12	Flatwasher 5/16in Regular	
69	4751600	42	Flatwasher 3/8in Regular	
70	4751800	11	Flatwasher 1/2in Regular	
71	4846820	1	Weldment, Engine Tray	
72	4846821	1	Mount, Motor/Generator	
73	0641611	2	Bolt, 3/8in-16NC x 1-3/8in	
74	3571008	1	Plate, Air	
75	3571009	1	Plate, Baffle	
76	3571019	1	Plate, Air Panel	
77	3960438	2.35 ft /.72m	Seal, Self Gripping	
78	1703876	1	Decal, Engine Tray Swing	

ITEM	PART NUMBER	QTY	DESCRIPTION	REV
79	4922737	1	Harness, Engine Grounding	
80	4711400	12	Flatwasher, 1/4in Thin	
81	1703162	2	Decal - Fan Blade	
82	4891600	2	Flatwasher 3/8in Hardened	
83	0641612	2	Bolt 3/8in-16NC x 1-1/2in	
		Ref	**Note: Arctic Package Items 90 - 94 Not Shown - Used on Arctic Machines Only**	
90	3980007	1	Seat, Battery	
91	1702941	1	Decal - Battery Heater	
92	1702942	1	Decal - Engine Block Heater	
93	2580024	1	Heater, Battery	
94	2580054	1	Heater, Engine Block	
		Ref	**CATERPILLAR ENGINE INSTALLATION OPTIONS:**	
		Ref	**4WD**	
	0272987	Ref	**Caterpillar Engine Installation (4WD) (SN 0300065080 through 0300087630)**	B
	0274612	Ref	**Caterpillar Engine Installation (4WD) (SN 0300087631 through 0300107511)**	B
	0275872	Ref	**Caterpillar Engine Installation (4WD) (SN 0300107512 through 0300123999)**	D
	0275479	Ref	**Arctic Machines (SN 0300065080 through 0300107511)**	B
	0275874	Ref	**Arctic Machines (SN 0300107512 through 0300123999)**	E
		Ref	**2WD**	
	0272988	Ref	**Caterpillar Engine Installation (2WD) (SN 0300065080 through 0300087630)**	B
	0274613	Ref	**Caterpillar Engine Installation (2WD) (SN 0300087631 through 0300100513)**	A
	0274612	Ref	**Caterpillar Engine Installation (2WD) (SN 0300100514 through 0300107511)**	B
	0275872	1	**Caterpillar Engine Installation (2WD) (SN 0300107512 through 0300123999)**	D
101	0100011	AR	Compound, Locking	
102	0100020	AR	Sealant	
104	0641406	1	Bolt, 1/4in-20NC x 3/4in (Not Shown)	
105	0641418	2	Bolt, 1/4in-20NC x 2-1/4in	
106	0641610	2	Bolt, 3/8in-16NC x 1-1/4in	
107	0642010	1	Bolt, 5/8in-11NC x 1-1/4in	
108	0902443	1	Bracket, Hood Latch Mount	
109	0902444	1	Bracket, Hood Support	
110	1320022	5	Clamp, Fuel Line	
111	1320223	1	Clamp, J Clip 1/2in (Not Shown)	
112	1701505	1	Decal, Diesel Fuel (Not Shown)	
114	2180536	1	Fitting, Straight Barbed	
115	2220250	1	Fitting, Reducer	
116	2220313	1	Fitting, Elbow Barbed	
117	2220459	1	Fitting, Elbow	
118	2220794	1	Fitting, Straight Barbed	
119	2720058	8 ft/2.4m	Hose	
120	2720271	8 ft/2.4m	Hose	
121	2750532	7 ft/2.13m	Hose	
122	3311405	3	Locknut 1/4in-20NC	
123	3312005	1	Locknut, 5/8in-11NC	
124	3340399	1	Pad, Wear	

ITEM	PART NUMBER	QTY	DESCRIPTION	REV
125	3900254	1	Screw, Shoulder	
126		Ref	Valve Options:	
126	4641061	1	Valve for 2WD Machines Built (Not Shown) **(SN 0300065080 through 0300100513)**	
126	4641108	NLA	Valve Used on 2WD Machines Built (Use p/n 1001099391) **(SN 0300100514 through 0300107511)**	
126	4641108	NLA	Valve Used on 4WD Machines Built (Use p/n 1001099391) **(SN 0300065080 through 0300107511)**	
126	4641317	1	Valve Used on 2WD Machines Built **(SN 0300107512 through 0300123999)**	
126	4641317	1	Valve Used on 4WD Machines Built **(SN 0300107512 through 0300123999)**	
126A		Ref	Cartridge and Coil Options:	
		Ref	**Note: Original Equipment Valve may have been replaced with Service Replacement Valve. Identify p/n stamped on valve before ordering parts.**	
126A	Not Required	0	Cartridge (4641061 Valve)	
126A	7012974	1	Cartridge without Coil (4641108 Valve)	
126A	7010543	1	Seal Kit - 7012974 Cartridge	
126A	7012941	1	Cartridge without Coil (4641317 & 1001099193 Valves)	
	7010543	1	Seal Kit - 7012941 Cartridge	
126A	7012944	1	Coil	
126B		Ref	Cartridge and Coil Options:	
		Ref	**Note: Original Equipment Valve may have been replaced with Service Replacement Valve. Identify p/n stamped on valve before ordering parts.**	
126B	7017479	1	Cartridge without Coil (4641061 Valve)	
126B	7012518	1	Seal Kit - 7017479 Cartridge	
126B	7012995	1	Cartridge without Coil (4641108 & 1001099391 Valve)	
	7012518	1	Seal Kit - 7012995 Cartridge	
126B	7012941	1	Cartridge without Coil (4641317 Valve)	
126B	7010543	1	Seal Kit - 7012941 Cartridge	
126B	7012943	1	Coil (4641061, 4641108 & 1001099391 Valves)	
126B	7012944	1	Coil (4641317 Valve)	
127	4751400	14	Flatwasher, 1/4in Regular	
128	4751600	2	Flatwasher, 3/8in Regular	
129	4752000	1	Flatwasher, 5/8in Regular (Not Shown)	
130	4752200	2	Flatwasher, 3/4in Regular	
131	2300004	2.7 gal /10.2L	Coolant, Antifreeze (Not Shown)	
132	2220273	1	Fitting, Reducer	
133	3290501	1	Nut M5	
134	3290601	1	Nut M6	
135	2200222	1	Plug, Pipe (Not Shown - Located on Bottom of Fuel Tank)	
136	0100079	AR	Sealant (Not Shown - Used on Item 135)	
140		Ref	Decal - Warning Explosion/Fire: **(SN 0300092804 through 0300123999)**	
140	1704972	1	ANSI Spec	
140	1706098	1	Australian Spec	
140	1706059	1	Brazilian Spec	
	1706098	1	CE Spec	
140	1706060	1	Chinese Spec	
140	1706064	1	CSA Spec	
140	1706062	1	Japanese Spec	

ITEM	PART NUMBER	QTY	DESCRIPTION	REV
140	1706061	1	Korean Spec	
140	1706063	1	Spanish Language	
		Ref	**Note: Arctic Package Items 141 - 146 Not Shown - Used on Arctic Machines Only**	
141	1060625	1	Cable, Immersion Heater	
142	1060626	1	Cord, 3-Way Extension	
143	1702943	1	Decal - Hydraulic Tank Heater	
144	1702944	1	Decal - Heater Cord	
145	2580050	1	Heater, Hydraulic Tank	
146	4460488	4	Terminal, Mounting Base	
		Ref	**CATERPILLAR ENGINE ASSEMBLY OPTIONS:**	
		Ref	**4WD**	
	0272997	Ref	**Caterpillar Engine Assembly (4WD) (SN 0300065080 through 0300087630)**	B
	2000318	Ref	**Caterpillar Engine Assembly (4WD) (SN 0300087631 through 0300123999)**	C
	2000389	Ref	**Arctic Machines**	D
		Ref	**2WD**	
	0272996	Ref	**Caterpillar Engine Assembly (2WD) (SN 0300065080 through 0300087630)**	B
	2000319	Ref	**Caterpillar Engine Assembly (2WD) (SN 0300087631 through 0300100513)**	C
	2000318	Ref	**Caterpillar Engine Assembly (2WD) (SN 0300100514 through 0300123999)**	D
201	0100011	AR	Compound, Locking	
203		Ref	Bolt Options (Not Shown):	
203	0641608	2	Bolt 3/8in-16NC x 1in **(SN 0300065080 through 0300095214)**	
203	3931620	2	Bolt 3/8in-16NC x 1-1/4in **(SN 0300095215 through 0300123999)**	
204	0641610	2	Bolt, 3/8in-16NC x 1-1/4in	
205	0641812	2	Bolt, 1/2in-13NC x 1-1/2in	
206	2110604	1	Fitting, Straight	
207	2111010	2	Fitting, Straight	
208		Ref	Fitting, Straight Options:	
208	2111616	1	Fitting, Straight (2WD) **(SN 0300065080 through 0300100513)**	
208	2111612	1	Fitting, Straight (2WD & All 4WD) **(SN 0300100514 through 0300123999)**	
209	2130604	1	Fitting, Elbow	
210	2131210	1	Fitting, Elbow	
211	2131212	1	Fitting, Elbow	
212		Ref	Fitting, Elbow Options:	
212	2151616	2	Fitting, Elbow (2WD) **(SN 0300065080 through 0300100513)**	
212	2151212	2	Fitting, Elbow (2WD & All 4WD) **(SN 0300100514 through 0300123999)**	
213	2170316	1	Fitting, Tee	
214	2170808	1	Fitting, Tee	
215	2221084	1	Fitting, Tee	
216		Ref	Auxiliary Pump Assembly Options (See AUXILIARY PUMP ASSEMBLY for Breakdown):	
216	3600279	NLA	Auxiliary Pump Assembly (Use p/n 3600423) **(SN 0300065080 through 0300106544)**	
216	3600423	1	Auxiliary Pump Assembly **(SN 0300106545 through 0300123999)**	

ITEM	PART NUMBER	QTY	DESCRIPTION	REV
217		Ref	Piston Pump Assembly Options:	
217	3600316	1	Piston Pump Assembly (2WD) (Not Shown - See PISTON PUMP ASSEMBLY (SERIES M46 PUMP) for Breakdown) **(SN 0300065080 through 0300100513)**	
217	3600385	1	Piston Pump Assembly (2WD) (See PISTON PUMP ASSEMBLY (SERIES 42 PUMP) for Breakdown) **(SN 0300100514 through 0300123999)**	
217	3600296	NLA	Piston Pump Assembly (4WD) (See PISTON PUMP ASSEMBLY (SERIES 42 PUMP) for Breakdown) (Use p/n 3600385) **(SN 0300065080 through 0300073424)**	
	3600385	1	4WD (See PISTON PUMP ASSEMBLY (SERIES 42 PUMP) for Breakdown) **(SN 0300073425 through 0300123999)**	
218	3600318	1	Gear Pump Assembly (See GEAR PUMP ASSEMBLY for Breakdown)	
218	7023929	1	Seal Kit - 3600318 Pump	
219	3790152	1	O-Ring	
220	4641199	2	Valve, Check	
221	4751600	2	Flatwasher 3/8in Regular (Not Shown)	
222	4891600	2	Flatwasher 3/8in Hardened	
	2000195	Ref	**CATERPILLAR ENGINE COMPONENTS**	D
301	7026848	1	Breather, Valve	
301	7026846	1	Gauze, Breather Valve	
302	7026847	4	Seal, Valve Cover Nut	
303	7026849	1	Gasket, Air Intake	
304	7026850	1	Seal, Valve Cover	
305	7026852	1	Flywheel with Starter Gear Set	
305	7026853	1	Gear, Flywheel	
306	70001403	1	Filter, Oil (was p/n 7026855)	
307	7026860	1	Cap, Oil Fill	
307	7026856	1	Seal, Oil Fill Cap	
308	7026858	1	Valve, Relief	
308	7026857	1	Seal	
309	7026864	1	Pump, Water	
309	7026863	1	Gasket, Water Pump (Fits Between Pump and Pump Rear Plate)	
309	7026865	1	Gasket, Water Pump (Fits Between Pump Rear Plate and Engine Block)	
310	7026867	1	Thermostat	
310	See Note	1	Regulator, Water (Note: Not available for purchase)	
310	7026866	1	Gasket (Fits Between Regulator and Engine Block)	
310	7026868	1	Gasket, Thermostat (Fits Between Regulator and Hose Adapter)	
311	7026869	1	Gasket, Exhaust	
312	7026870	1	Gasket, Exhaust Manifold	
313	70001695	1	Fuel Filter Assembly	
313	70003791	1	Element, Fuel Filter (was p/n 7026871)	
313	7026872	1	Gasket, Fuel Filter Element	
314	7026873	1	Pump, Fuel Transfer	
314	7026874	1	Seal	
315	7026875	4	Injector, Fuel	
316	See Note	1	Pump, Fuel Injection (Note: Not available for purchase)	
317	70001990	1	Solenoid, Fuel Shut-Off (was p/n 7026876) (Note: P/N 70001990 includes adapter harness if required.)	
318	70000544	1	Alternator	
318	70001180	1	Bolt, Long	
319	7026878	4	Glowplug	

ITEM	PART NUMBER	QTY	DESCRIPTION	REV
320	1001097554	1	Switch, Oil Pressure (was p/n 7026844)	
321	7026840	1	Switch, Water Temperature	
321	7026882	1	Seal, Sensor	
322	7026879	1	Starter	
323	70001257	1	Lever, Alternator Adjustment	
324	7026854	1	Seal, Front Main (Not Shown - Located on Front of Engine Block)	
325	7026851	1	Seal, Rear Main (Not Shown - Located on Rear of Engine Block)	
326	7026880	1	Belt	
327	7026885	1	Dipstick Oil Level	
327	7026886	1	Tube, Dipstick	
327	7026881	1	O-Ring, Dipstick Tube	
328	7026861	1	Plug, Drain	
329	7026862	1	Gasket, Valve Bracket (Not Shown - Located on Between Valve Bracket and Head)	
330	7026859	1	Gasket, Oil Pan (Not Shown)	
331	7026883	1	Speed Sensor Kit	
331	7026836	1	Connector, Speed Sensor	
332	See Note	1	Actuator/Linkage Assembly - Throttle (Note: was p/n 1600351 which is not available as a service part. Use service replacement parts below.)	
332A	7026884	1	Actuator and Electrical Connector Kit	
332A	7026835	1	Connector, Actuator	
332B	7026843	1	Linkage Kit	

FIGURE 2-12. USA BUILT MACHINES/DEUTZ ENGINE INSTALLATION (SN 0300065080 through 0300077682)

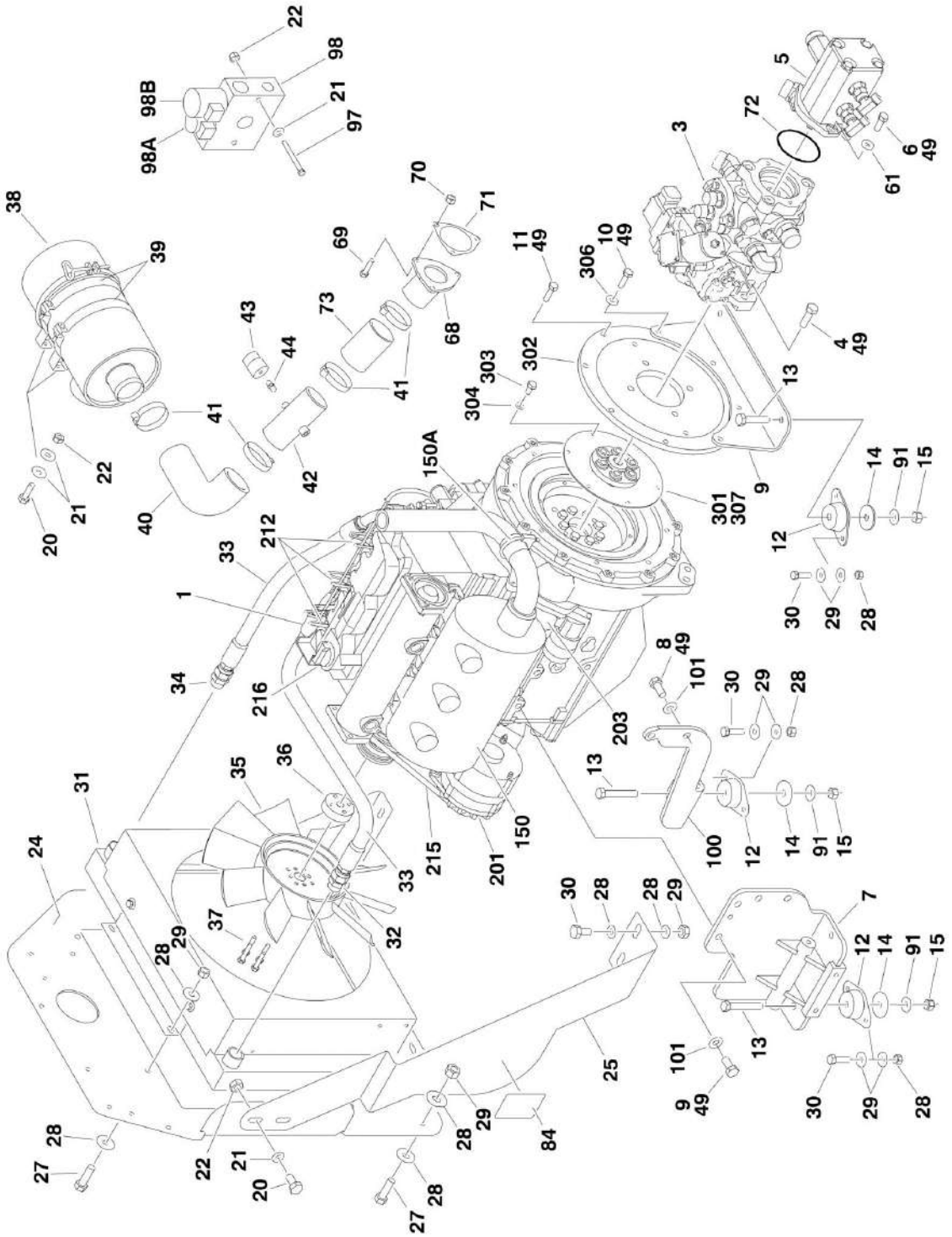

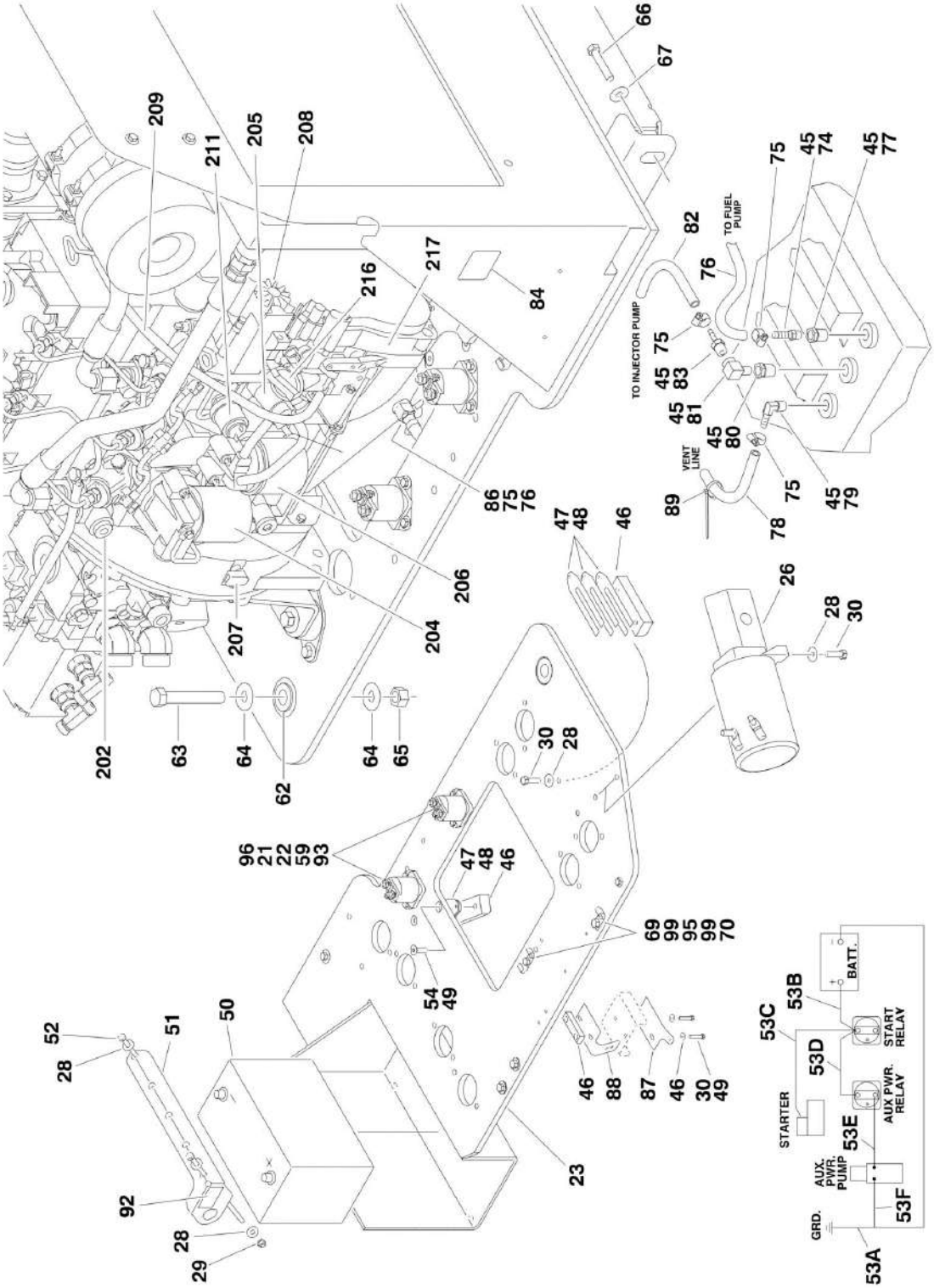
TO INJECTOR PUMP
TO FUEL PUMP
VENT LINE
BATT.
START RELAY
AUX PWR. RELAY
STARTER
AUX. PWR. PUMP
GRD.
53A
53B
53C
53D
53E
53F

FIGURE 2-12. USA BUILT MACHINES/DEUTZ ENGINE INSTALLATION (SN 0300065080 through 0300077682)

ITEM	PART NUMBER	QTY	DESCRIPTION	REV
		Ref	**DEUTZ ENGINE INSTALLATIONS (USA BUILT MACHINES) (SN 1ST DIGIT IS 0)**	
	0271027	Ref	**Deutz Engine Installations (2WD Machines)**	9-H
	0271029	Ref	**Deutz Engine Installations (4WD Machines)**	11-H
1		Ref	Engine Assembly Options:	
1	2000175	1	Engine Assembly **(SN 0300065080 through 0300065460)**	
1	2000190	1	Engine Assembly **(SN 0300065461 through 0300077682)**	
3		Ref	Piston Pump Assembly Options:	
3	3600316	1	Piston Pump Assembly (2WD Machines) (See PISTON PUMP ASSEMBLY (SERIES M46 PUMP) for Breakdown)	
3		Ref	Piston Pump Assembly (4WD Machines) (See PISTON PUMP ASSEMBLY (SERIES 42 PUMP) for Breakdown) Options:	
3	3600296	NLA	Piston Pump Assembly (Use p/n 3600385) **(SN 0300065080 through 0300073424)**	
3	3600385	1	Piston Pump Assembly **(SN 0300073425 through 0300077682)**	
4	0641812	2	Bolt 12/in-13NC x 1-1/2in	
5	3600318	1	Gear Pump Assembly (See GEAR PUMP ASSEMBLY for Breakdown)	
5	7023929	1	Seal Kit - 3600318 Pump	
6	0641608	2	Bolt 3/8in-16NC x 1in	
7		Ref	Bracket, Motor Mount Options:	
7	4846478	NLA	Machines with Generator (Use p/n 4846567) **(SN 0300065080 through 0300074952)**	
7	4846567	1	Machines without Generator (Standard)	
7	1001138135	1	Machines without Generator (Optional Service Replacement - No Generator Mounting Capabilities) (Not Shown)	
8	0711414	4	Bolt M14 x 30mm	
9	3570801	1	Plate, Rear Mounting	
10	0701015	4	Bolt M10 x 35mm	
11	0701012	4	Bolt M10 x 25mm	
12	3200378	4	Mount, Rubber Motor	
13	0641820	4	Bolt 12/in-13NC x 2-1/2in	
14	4740274	4	Washer, Snubbing	
15	3311805	4	Locknut 1/2in-13NC	
20	0641406	6	Bolt 1/4in-20NC x 3/4in	
21	4751400	32	Flatwasher 1/4in Regular	
22	3311405	12	Locknut 1/4in-20NC	
23	4845613	1	Tray, Engine	
24	3570571	1	Plate, Radiator Mount	
25	3570607	1	Plate, Radiator Support	
26	3600279	NLA	Auxiliary Pump Assembly (Use p/n 3600423) (See AUXILIARY PUMP ASSEMBLY for Breakdown)	
27	0641609	6	Bolt 3/8in-16NC x 1-1/8in	
28	4751600	46	Flatwasher 3/8in Regular	
29	3311605	20	Locknut 3/8in-16NC	
30	0641610	18	Bolt 3/8in-16NC x 1-1/4in	
31	3620033	NLA	Radiator (Use p/n 1001150998)	
32	2220451	2	Fitting, Straight	
33	2720467	2	Hose	
34	2220409	1	Fitting, Elbow **(SN 0300065080 through 0300075503)**	

ITEM	PART NUMBER	QTY	DESCRIPTION	REV
35	2060025	1	Fan	
36	0080231	1	Spacer, Fan	
37	0700816	4	Bolt M8 x 40mm	
38	1340060	1	Air Cleaner Assembly	
38	7012664	1	Element, Air Cleaner	
39	0340041	2	Band, Mounting	
40	2720434	1	Elbow	
41	1320016	4	Clamp, Hose	
42	4567495	1	Tube, Air Intake	
43	4360392	1	Switch, Restrictor Indicator	
44	2180798	1	Fitting	
45	0100020	AR	Sealant, Pipe	
46	3340399	3	Pad, Wear	
47	4070497	4	Shim 1/8in	
48	4070498	2	Shim 1/16in	
49	0100011	AR	Compound, Locking	
50		Ref	Battery Options:	
50	0400075	1	Battery (Wet)	
50	7016180	1	Battery (Dry)	
51	0181727	1	Tie-Down, Battery	
52	0630498	2	Bolt, Tie-Down	
53	2902060	1	Cable Kit - Battery	B
53A	7027041	1	Cable - Battery and Auxiliary Pump to Ground (was p/n 7016837)	
53B	7016817	1	Cable - Battery to Starter Relay	
53C	7016834	1	Cable - Starter Relay to Starter	
53D	7016838	1	Cable - Starter Relay to Auxiliary Relay	
53E	7016820	1	Cable - Auxiliary Relay to Auxiliary Pump	
54	0741610	2	Screw, Flathead 3/8in-16NC x 2in	
59	3740067	2	Relay	
61	4891600	2	Washer, Hardened 3/8in	
62	0962172	1	Bushing, Flanged	
63	3900254	1	Bolt Shoulder 3/4in x 4in	
64	4752200	2	Flatwasher 3/4in Regular	
65	3312005	1	Locknut 5/8in-11NC	
66	0642010	1	Bolt 5/8in-11NC x 1-1/4in	
67	4752000	1	Flatwasher 5/8in Regular	
68	4845395	1	Air Intake Adapter Weldment	
69	0641510	4	Bolt 5/16in-18NC x 1-1/4in	
70	3311505	4	Locknut 5/16in-18NC	
71	3960407	1	Gasket	
72	3790152	1	O-Ring	
73		Ref	Coupling, Rubber Options:	
73	2720351	4 in/10cm	Coupling, Rubber **(SN 0300065080 through 0300068056)**	
73	2720449	1	Coupling, Rubber **(SN 0300068057 through 0300077682)**	
74	2220794	1	Fitting, Barb	
75	1320022	6	Clamp, Hose	
76	2720058	12 ft/3.7m	Hose	
77	2220273	1	Fitting, Reducer	
78	2750532	7 ft/2.1m	Hose	
79	2220313	1	Fitting, Elbow	
80	2220250	1	Fitting, Reducer	

ITEM	PART NUMBER	QTY	DESCRIPTION	REV
81	2220459	1	Fitting, Elbow	
82	2720271	12 ft/3.7m	Hose	
83	2180536	1	Fitting, Straight	
84	1703162	2	Decal - Fan	
85	1701505	1	Decal - Diesel Fuel (Not Shown)	
86	4640751	1	Valve, Oil Drain	
87	0902444	1	Bracket, Hood Support	
88	0902443	1	Bracket, Latch Mount	
89	4240099	1	Tie-Strap	
90	2200222	1	Plug, Pipe (Not Shown - Located at Bottom of Fuel Tank)	
91	4751800	4	Flatwasher 1/2in Regular	
92	1703876	1	Decal - Engine Tray Swing	
93	4791400	4	Starwasher 1/4in	
95	1320222	5	J-Clamp	
96	0641410	4	Bolt 1/4in-20NC x 1in	
97	0641418	2	Bolt 1/4in-20NC 2-1/4in	
98		Ref	Valve Options:	
98	4641061	1	Valve Used on 2WD Machines (Not Shown)	
98	7017479	1	Cartridge without Coil (4641061 Valve)	
98	7012518	1	Seal Kit - 7017479 Cartridge	
98	7012943	1	Coil (4641061 Valve)	
98	4641108	NLA	Valve Used on 4WD Machines (Use p/n 1001099391)	
		Ref	**Note: Original Equipment Valve may have been replaced with Service Replacement Valve. Identify p/n stamped on valve before ordering parts.**	
98A	7012974	1	Cartridge without Coil (4641108 Valve)	
98A	7010543	1	Seal Kit - 7012974 Cartridge	
98A	7012941	1	Cartridge without Coil (1001099391 Valve)	
98A	7010543	1	Seal Kit - 7012974 Cartridge	
98A	7012944	1	Coil	
98B	7012995	1	Cartridge without Coil	
98B	7012518	1	Seal Kit - 7012995 Cartridge	
98B	7012943	1	Coil	
99	4751500	2	Flatwasher 5/16in Regular	
100	0902740	1	Bracket, Front Engine Mounting (Right Side)	
101	4751900	6	Flatwasher 9/16in Regular	
		Ref	**MUFFLER INSTALLATION OPTIONS**	
150		Ref	Muffler Options:	
150	3220110	1	Standard	
150	3220112	1	Catalytic	
150A	1320176	1	Clamp, Muffler	
		Ref	**ENGINE COMPONENTS**	
	2000175	Ref	**Engine Components (SN 0300065080 through 0300065460)**	
	2000190	Ref	**Engine Components (SN 0300065461 through 0300077682)**	
201	7000663	1	Alternator (was p/n 7020410)	
201	70002234	1	Bracket, Adjusting	
201	7020464	1	Regulator, Voltage (Not Shown)	
202	7020461	1	Switch, Oil Pressure	
203	7020479	1	Starter	
204	7016331	1	Filter, Oil	
204	7027236	1	Sensor, Oil Temperature (Not Shown - Located in Rear Of Filter Mount)	

ITEM	PART NUMBER	QTY	DESCRIPTION	REV
205	7020463	1	Pump Fuel Supply (was p/n 7024413)	
205	7020411	1	O-Seal Between Fuel Pump and Engine Block (Not Shown)	
206	7020023	1	Filter, Fuel	
207	7024565	1	Sensor, Tach/Speed (Not Shown) (was P/N 7020481)	
207	70003932	1	Spacer, Sleeve (Not Shown)	
208	7020458	1	Actuator, Throttle (Not Shown)	
208	7027276	2	Spring For 7020458	
209	7020026	1	Dipstick	
210	7020027	1	Flywheel (Not Shown)	
210	7020477	1	Rim, Gear (Not Shown) (2000175 Engine Only)	
210	7024579	1	Rim, Gear (Not Shown) (2000190 Engine Only)	
210	70000264	1	Flywheel/Gear Assembly (Not Shown) (2000190 Engine Only)	
211	7020168	1	Switch, Oil Temperature (Not Shown)	
211	7020480	1	Seal, Temperature Switch	
212	7024318	3	Pump, Fuel Injection (was P/N 7020462)	
213	7020449	3	Gasket, Intake (Not Shown)	
214	7020488	1	Connector, Electrical (Not Shown - Located at Sensors) (2000190 Engine Only)	
215	7020408	1	V-Belt	
216	7020465	1	Cap, Filler	
217	7020467	1	Pump, Oil	
217	7020468	1	Seal Between Oil Pump and Engine Block (Not Shown)	
218	7020482	1	Gasket, Kit (Not Shown) (2000190 Engine Only)	
	0256847	Ref	**PUMP COUPLING INSTALLATION**	-
301	1660234	1	Coupling, Hayes	
302	0080163	1	Plate, Pump Adapter	
303	0700810	6	Bolt M8 x 20mm	
304	4831900	6	Lockwasher M8	
306	4832000	8	Lockwasher M10	
307	3020021	AR	Grease, Coupling (Not Shown)	

FIGURE 2-13. USA BUILT MACHINES/DEUTZ ENGINE INSTALLATION (SN 0300077683 through 0300123999)

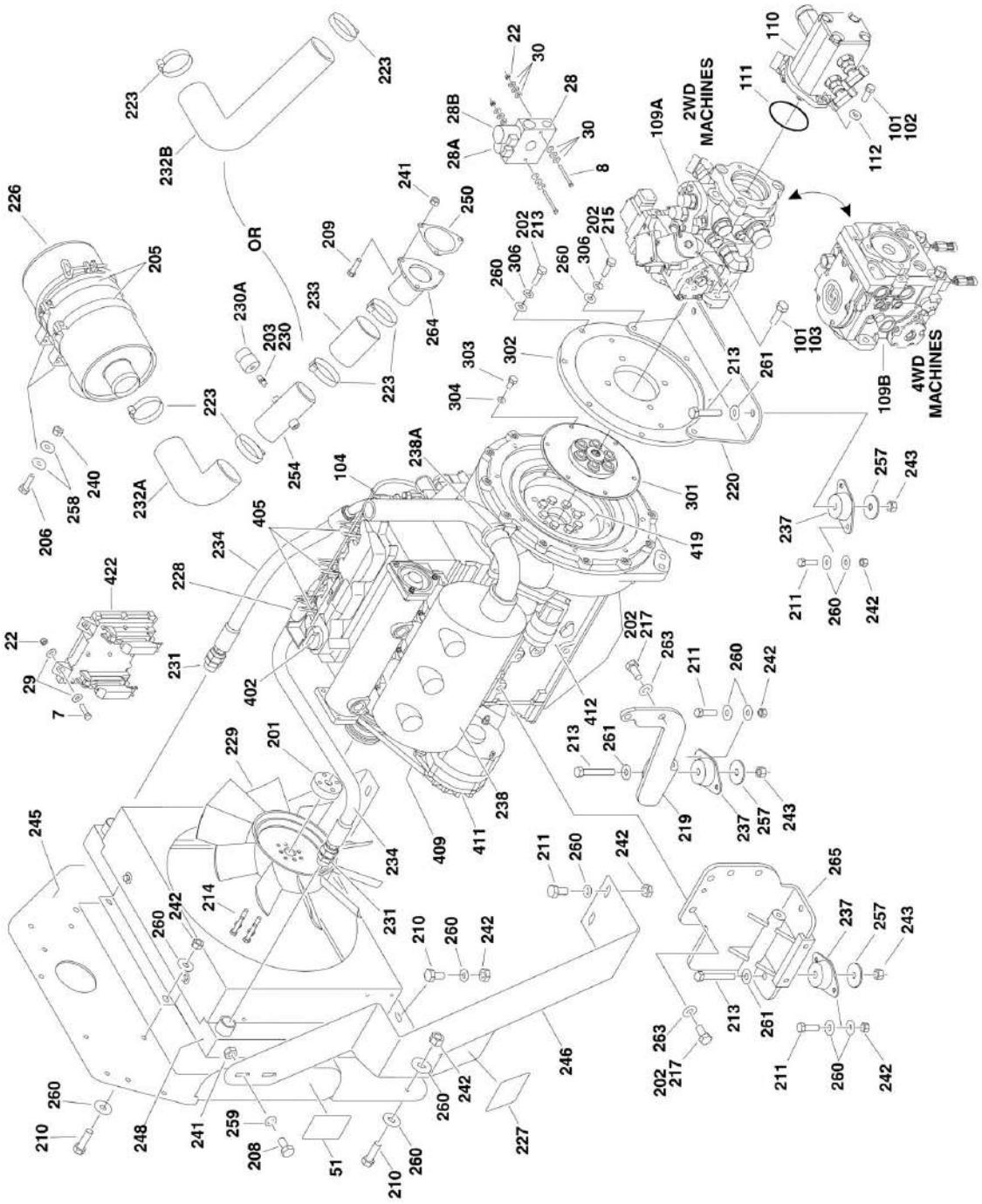

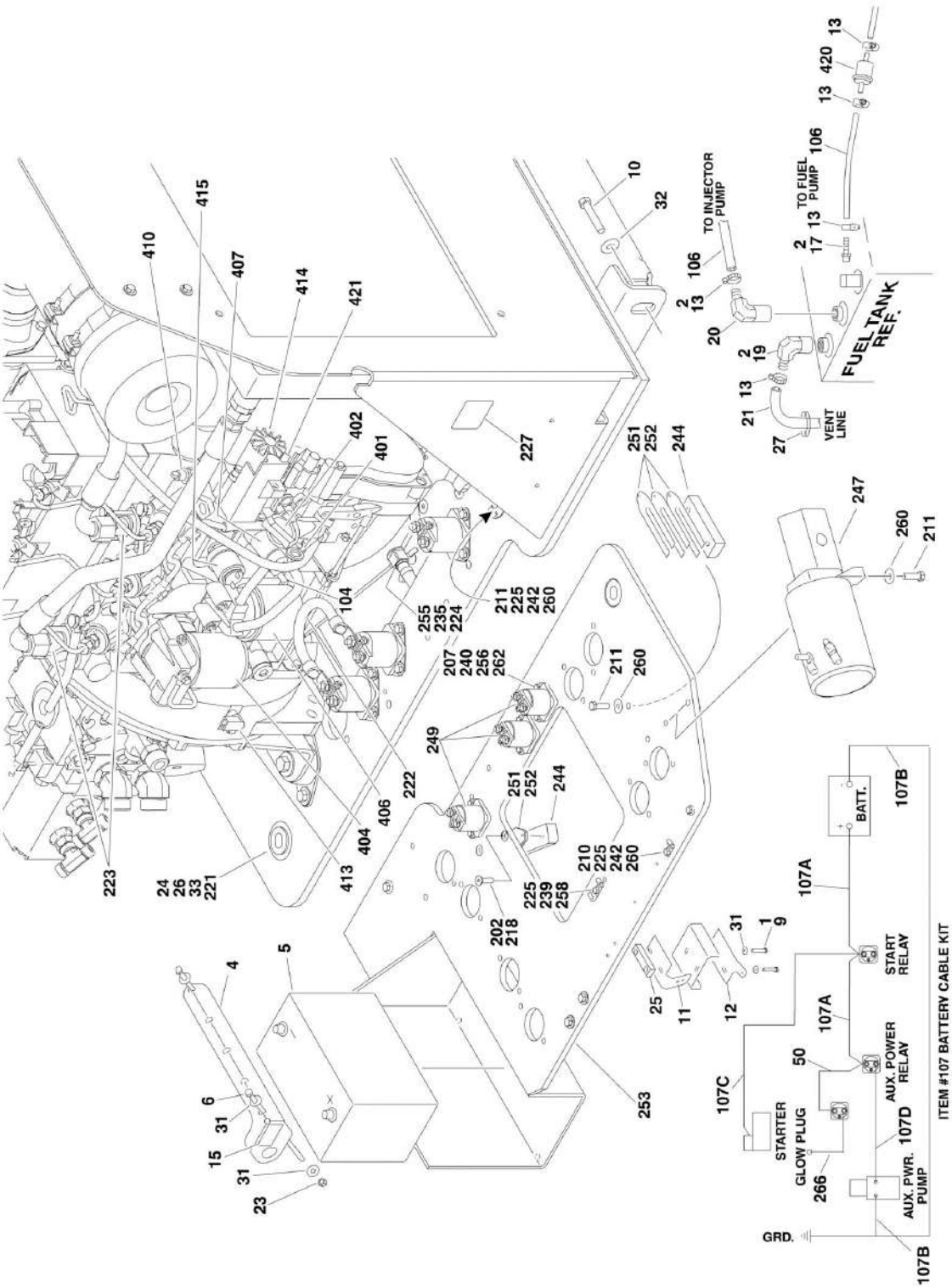
TO INJECTOR PUMP
TO FUEL PUMP
FUEL TANK REF.
VENT LINE
BATT.
START RELAY
AUX. POWER RELAY
STARTER
GLOW PLUG
AUX. PWR. PUMP
GRD.
ITEM #107 BATTERY CABLE KIT

FIGURE 2-13. USA BUILT MACHINES/DEUTZ ENGINE INSTALLATION (SN 0300077683 through 0300123999)

ITEM	PART NUMBER	QTY	DESCRIPTION	REV
		Ref	**DEUTZ ENGINE INSTALLATIONS (USA BUILT MACHINES) (SN 1ST DIGIT IS 0)**	
	0273797	Ref	**Deutz Engine Installations (2WD) (SN 0300077683 through 0300085628)**	A
	0274333	Ref	**Deutz Engine Installations (2WD) (SN 0300085629 through 0300100513)**	C
	0274332	Ref	**Deutz Engine Installations (2WD) (SN 0300100514 through 0300107511)**	D
	0275869	Ref	**Deutz Engine Installations (2WD) (SN 0300107512 through 0300123999)**	B
	0273796	Ref	**Deutz Engine Installations (4WD) (SN 0300077683 through 0300085628)**	A
	0274332	Ref	**Deutz Engine Installations (4WD) (SN 0300085629 through 0300107511)**	D
	0275869	Ref	**Deutz Engine Installations (4WD) (SN 0300107512 through 0300123999)**	B
	0275106	Ref	**Deutz Engine Installations (4WD Arctic Machines) (SN 0300077683 through 0300107511)**	C
	0275873	Ref	**Deutz Engine Installations (4WD Arctic Machines) (SN 0300107512 through 0300123999)**	B
1	0100011	AR	Compound, Locking	
2	0100020	AR	Sealant, Pipe	
4	0181727	1	Angle, Battery Hold Down	
5	0400075	1	Battery (Wet)	
6	0630498	2	Bolt, Battery Hold Down	
7	0641410	4	Bolt 1/4in-20NC x 1-1/4in Only **(SN 0300085629 through 0300123999)**	
8	0641418	2	Bolt 1/4in-20NC x 2-1/4in	
9	0641610	2	Bolt 3/8in-16NC x 1-1/4in	
10	0642010	1	Bolt 5/8in-11NC x 1-1/4in	
11	0902443	1	Bracket, Hood Latch Mount	
12	0902444	1	Bracket, Hood Support	
13	1320022	AR	Clamp, Fuel Line	
14	1701505	1	Decal, Diesel Fuel (Not Shown)	
15	1703876	1	Decal, Engine Tray Swing	
17	2180348	1	Fitting, Barbed	
18	2200222	1	Plug, Pipe (Not Shown - Located on Bottom of Fuel Tank)	
19	2220313	1	Fitting, Elbow Barbed	
20	2221176	1	Fitting, Elbow	
21	2750532	6 ft/1.83m	Hose	
22	3311405	6	Locknut 1/4in-20NC	
23	3311605	2	Locknut 3/8in-16NC	
24	3312005	1	Locknut 5/8in-11NC	
25	3340399	1	Pad, Wear	
26	3900254	1	Screw, Shoulder	
27	4240099	AR	Wire, Tie	
28		Ref	Valve Options:	
28	4641061	1	Valve for 2WD Machines Built (Not Shown) **(SN 0300077683 through 0300100513)**	
28	4641108	NLA	Valve Used on 2WD Machines Built and 4WD Machines (Use p/n 1001099391) **(SN 0300100514 through 0300107511, SN 0300100514 through 0300107511)**	

ITEM	PART NUMBER	QTY	DESCRIPTION	REV
28	4641317	1	Valve Used on 2WD Machines Built and 4WD Machines **(SN 0300107512 through 0300123999, SN 0300107512 through 0300123999)**	
28A		Ref	Cartridge and Coil Options:	
		Ref	**Note: Original Equipment Valve may have been replaced with Service Replacement Valve. Identify p/n stamped on valve before ordering parts.**	
28A	Not Required	0	Cartridge (4641061 Valve)	
28A	7012974	1	Cartridge without Coil (4641108 Valve)	
28A	7010543	1	Seal Kit - 7012974 Cartridge	
28A	7012941	1	Cartridge without Coil (4641317 & 1001099193 Valves)	
28A	7010543	1	Seal Kit - 7012941 Cartridge	
28A	7012944	1	Coil	
28B		Ref	Cartridge and Coil Options:	
		Ref	**Note: Original Equipment Valve may have been replaced with Service Replacement Valve. Identify p/n stamped on valve before ordering parts.**	
28B	7017479	1	Cartridge without Coil (4641061 Valve)	
28B	7012518	1	Seal Kit - 7017479 Cartridge	
28B	7012995	1	Cartridge without Coil (4641108 & 1001099391 Valve)	
28B	7012518	1	Seal Kit - 7012995 Cartridge	
28B	7012941	1	Cartridge without Coil (4641317 Valve)	
28B	7010543	1	Seal Kit - 7012941 Cartridge	
28B	7012943	1	Coil (4641061, 4641108 & 1001099391 Valves)	
28B	7012944	1	Coil (4641317 Valve)	
29	4711400	8	Flatwasher 1/4in Thin	
30	4751400	12	Flatwasher 1/4in Regular	
31	4751600	6	Flatwasher 3/8in Regular	
32	4752000	1	Flatwasher 5/8in Regular	
33	4752200	2	Flatwasher 3/4in Regular	
		Ref	**Note: Arctic Package Items 34 - 43 Not Shown - Used on Arctic Machines Only**	
34	1060626	1	Cord, 3 Way Extension (Located on Left Front of Engine)	
35	1702943	1	Decal - Hydraulic Tank Heater (Located on bottom of Hydraulic Oil Tank)	
36	2580024	1	Heater, Battery (Located on Battery)	
37	2580050	1	Heater, Hydraulic Tank (Located on bottom of Hydraulic Oil Tank)	
38	3980007	1	Seat, Battery (Located on Battery)	
39	1702941	1	Decal - Battery Heater (Located on Battery Heater)	
40	1702942	1	Decal - Engine Block Heater (Located on Right Side of Engine)	
41	1702944	1	Decal - Heater Cord (Located on Left Front of Engine)	
42	1320223	2	Clamp (Located on Left Front of Engine)	
43	1060625	1	Cable, Immersion Heater (Located on bottom of Hydraulic Oil Tank)	
50	4922978	1	Harness, Start Assist Solenoid Only **(SN 0300077683 through 0300085629)**	
51		Ref	Decal - Warning Explosion/Fire Options: **(SN 0300092804 through 0300123999)**	
51	1704972	1	ANSI Spec	
51	1706059	1	Brazilian Spec	
51	1706060	1	Chinese Spec	
51	1706064	1	CSA Spec	
51	1706062	1	Japanese Spec	

ITEM	PART NUMBER	QTY	DESCRIPTION	REV
51	1706061	1	Korean Spec	
51	1706063	1	Spanish Language	
		Ref	**ENGINE AND PUMPS SUB-ASSEMBLY**	
	2000243	Ref	**Engine and Pumps Sub-Assembly (2WD) (SN 0300077683 through 0300085628)**	A
	2000289	Ref	**Engine and Pumps Sub-Assembly (2WD) (SN 0300085629 through 0300100513)**	D
	2000290	Ref	**Engine and Pumps Sub-Assembly (2WD) (SN 0300100514 through 0300123999)**	E
	2000244	Ref	**Engine and Pumps Sub-Assembly (4WD) (SN 0300077683 through 0300085628)**	A
	2000290	Ref	**Engine and Pumps Sub-Assembly (4WD) (SN 0300085629 through 0300123999)**	E
	2000364	Ref	**Engine and Pumps Sub-Assembly (4WD Arctic Machines)**	F
101	0100011	AR	Compound, Locking	
102		Ref	Bolt Options:	
102	0641608	2	Bolt 3/8in-16NC x 1in **(SN 0300077683 through 0300095214)**	
102	3931620	2	Bolt 3/8in-16NC x 1-1/4in **(SN 0300095215 through 0300123999)**	
103	0641812	2	Bolt 1/2in-13NC x 1-1/2in	
104	1320022	2	Clamp, Fuel Line	
106	2720058	24 ft /7.32m	Hose	
107	2902060	1	Battery Cable Kit	B
107A	7016817	1	Cable (Battery + to Auxiliary Relay)	
107B	7027041	1	Cable (Battery - to Ground) (was p/n 7016837)	
107C	7016820	1	Cable (Auxiliary Relay to Starter)	
107D	7016834	1	Cable (Auxiliary Relay to Auxiliary Pump)	
109		Ref	Piston Pump Assembly with Fittings Options:	
109A	3600406	1	Piston Pump Assembly with Fittings (2WD) (See PISTON PUMP ASSEMBLY (SERIES M46 PUMP) for Breakdown) **(SN 0300077683 through 0300100513)**	
109B	3600407	1	Piston Pump Assembly with Fittings (2WD) (See PISTON PUMP ASSEMBLY (SERIES 42 PUMP) for Breakdown) **(SN 0300100514 through 0300123999)**	
109B	3600407	1	Piston Pump Assembly with Fittings (4WD) (See PISTON PUMP ASSEMBLY (SERIES 42 PUMP) for Breakdown)	
109A	3600406	1	Piston Pump Assembly with Fittings (4WD Arctic Machines) (See PISTON PUMP ASSEMBLY (SERIES 46 PUMP) for Breakdown) **(SN 0300077683 through 0300095240)**	
109B	3600407	1	Piston Pump Assembly with Fittings (4WD Arctic Machines) (See PISTON PUMP ASSEMBLY (SERIES 42 PUMP) for Breakdown) **(SN 0300095241 through 0300123999)**	
110	3600408	1	Gear Pump Assembly with Fittings (See GEAR PUMP ASSEMBLY for Breakdown)	
111	3790152	1	O-Ring	
112	4891600	2	Flatwasher, 3/8in Hardened	
		Ref	**ENGINE ASSEMBLY**	
	2000240	Ref	**Engine Assembly (SN 0300077683 through 0300085628)**	E
	2000288	Ref	**Engine Assembly (SN 0300085629 through 0300095214)**	B
	2000345	Ref	**Engine Assembly (SN 0300095215 through 0300123999)**	G
	2000363	Ref	**Arctic Machines**	G
201	0080231	1	Adapter, Fan Spacer	
202	0100011	AR	Compound, Locking	
203	0100020	AR	Sealant, Pipe Only **(SN 0300077683 through 0300106878)**	

ITEM	PART NUMBER	QTY	DESCRIPTION	REV
205	0340041	2	Band, Muffler Bracket	
206	0641406	4	Bolt 1/4in-20NC x 3/4in	
207	0641409	6	Bolt, 1/4in-20NC x 1-1/8in	
208	0641507	2	Bolt, 5/16in-10NC x 7/8in	
209	0641510	3	Bolt, 5/16in-10NC x 1-1/4in	
210	0641609	9	Bolt 3/8in-16NC x 1-1/8in	
211	0641610	15	Bolt 3/8in-16NC x 1-1/4in	
212	0641611	2	Bolt 3/8in-16NC x 1-3/8in	
213	0641820	4	Bolt 1/2in-13NC x 2-1/2in	
214	0700816	4	Bolt, Metric 8mm x 40mm	
215	0701014	4	Bolt, Metric 10mm x 30mm	
216	0701012	4	Bolt, Metric 10mm x 25mm	
217	0711414	6	Bolt, Metric 14mm x 30mm	
218	0741610	2	Screw, Countersunk 3/8in-16NC x 1-1/4in	
219	0902740	1	Bracket, Engine Mounting	
220	0903063	1	Plate, Engine Mounting	
221	0962172	1	Bushing, Flanged	
222	1060904	1	Cable, Jumper **(SN 0300095215 through 0300123999)**	
223	1320016	AR	Clamp	
224	1320022	1	Clamp, Hose	
225	1320222	6	Clamp, "J" Clip 3/8in **(SN 0300077683 through 0300095214)**	
225	1320223	4	Clamp, "J" Clip 1/2in **(SN 0300095215 through 0300123999)**	
226	1340060	1	Air Cleaner Assembly	
226	7012664	1	Element, Air Cleaner	
227	1703162	2	Decal, Fan Blade	
228		Ref	Engine, Deutz Options:	
228	2000217	1	Engine, Deutz (F3M2011 Tier II) **(SN 0300077683 through 0300085628)**	
228	2000273	1	Engine, Deutz (F3M2011 Tier II) **(SN 0300085629 through 0300095214)**	
228	2000338	1	Engine, Deutz (F3M2011 Tier II) **(SN 0300095215 through 0300106877)**	
228	1001092723	1	Engine, Deutz (D2011L03 Tier III) **(SN 0300106878 through 0300123999)**	
229	2060025	1	Fan	
230		Ref	Fitting Options:	
230	Not Required	0	Fitting **(SN 0300106878 through 0300123999)**	
230	2200221	1	Plug **(SN 0300085629 through 0300106877)**	
230	2180798	1	Fitting, Restrictor Indicator **(SN 0300077683 through 0300085629)**	
230A	4360392	1	Switch, Restriction Indicator **(SN 0300077683 through 0300085629)**	
231	2220451	2	Fitting	
232		Ref	Hose, Elbow Options:	
232A	2720434	1	Hose, Elbow **(SN 0300077683 through 0300106877)**	
232B	1001091179	1	Hose, Elbow **(SN 0300106878 through 0300123999)**	
233	2720449	1	Hose, Air Cleaner Intake Only **(SN 0300077683 through 0300106877)**	
234	2720467	2	Hose, Oil Cooler	
235	2750532	1 ft /30.5cm	Hose	
236		Ref	Motor Oil Options (Not Shown):	
236	3020016	2.5 gal	Motor Oil Mobil Delvac MX 15W-40 (Without Arctic Package)	

ITEM	PART NUMBER	QTY	DESCRIPTION	REV
		/9.46L		
236	3020044	2.5 gal /9.46L	Motor Oil Mobil 0W-40 (With Arctic Package)	
237	3200406	4	Mount, Rubber	
238	3220110	1	Muffler, Deutz Spark Arresting	
238A	1320176	1	Clamp, Muffler	
239	0641405	1	Bolt 1/4in-20NC x 5/8in	
240	3311405	10	Locknut 1/4in-20NC	
241	3311505	5	Locknut 5/16in-18NC	
242	3311605	22	Locknut 3/8in-16NC	
243	3311805	4	Locknut 1/2in-13NC	
244	3340399	2	Pad, Wear	
245		Ref	Plate, Radiator Mount Options:	
245	3570571	NLA	Plate, Radiator Mount (Use p/n 3576972) **(SN 0300077683 through 0300106544)**	
245	3576972	1	Plate, Radiator Mount **(SN 0300106545 through 0300123999)**	
246		Ref	Support, Radiator Options:	
246	3570607	1	Support, Radiator **(SN 0300077683 through 0300082440)**	
246	3573667	1	Support, Radiator **(SN 0300082441 through 0300123999)**	
247		Ref	Auxiliary Pump Assembly Options (See AUXILIARY PUMP ASSEMBLY for Breakdown):	
247	3600279	NLA	Auxiliary Pump Assembly (Use p/n 3600423) **(SN 0300077683 through 0300106544)**	
247	3600423	1	Auxiliary Pump Assembly **(SN 0300106545 through 0300123999)**	
248	3620033	NLA	Radiator (Use p/n 1001150998)	
249	3740067	Ref	Relay (Auxiliary Power) Options:	
249	3740067	2	Relay (Auxiliary Power) **(SN 0300077683 through 0300095214)**	
249	3740067	3	Relay (Auxiliary Power) **(SN 0300095215 through 0300123999)**	
250	3960407	1	Gasket, Air Intake	
251	4070497	4	Shim (11 Gauge)	
252	4070498	2	Shim (16 Gauge)	
253	4340745	1	Tray, Engine Mounting	
254	4567495	1	Tube, Tee Only **(SN 0300077683 through 0300106878)**	
255	4640751	1	Valve, Oil Drain	
256	4711400	12	Flatwasher 1/4in Thin	
257	4740274	4	Washer, Snubbing	
258	4751400	9	Flatwasher 1/4in Regular	
259	4751500	4	Flatwasher 5/16in Regular	
260	4751600	56	Flatwasher 3/8in Regular	
261	4751800	4	Flatwasher 1/2in Regular	
262	4791400	6	Starwasher 1/4in	
263	4812200	6	Flatwasher M14	
264	4845395	1	Weldment, Adapter	
265		Ref	Bracket, Motor Mount Options:	
265	4846567	1	Machines with Generator	
265	4846567	1	Machines without Generator (Standard)	
265	1001138135	1	Machines without Generator (Optional Service Replacement - No Generator Mounting Capabilities) (Not Shown)	
266		Ref	Harness, Glow Plugs Options:	
266	4923451	1	Without Arctic Package **(SN 0300095215 through**	

ITEM	PART NUMBER	QTY	DESCRIPTION	REV
			0300123999)	
266	4922642	1	With Arctic Package	
		Ref	**Note: Arctic Package Item 267 Not Shown - Used on Arctic Machines Only**	
267	2580062	1	Heater, Engine Block	
	0256847	Ref	**PUMP COUPLING INSTALLATION**	2
301	1660234	1	Coupling, Hayes	
302	0080163	1	Plate, Pump Adapter	
303	0700810	6	Bolt M8 x 20mm	
304	4831900	6	Lockwasher M8	
306	4832000	8	Lockwasher 10mm Only **(SN 0300077683 through 0300085629)**	
307	3020021	AR	Grease, Coupling (Not Shown)	
		Ref	**ENGINE COMPONENTS**	
	2000217	Ref	**Engine Components (F3M2011 Tier II) (SN 0300077683 through 0300085628)**	
	2000273	Ref	**Engine Components (F3M2011 Tier II) (SN 0300085629 through 0300095214)**	
	2000338	Ref	**Engine Components (F3M2011 Tier II) (SN 0300095215 through 0300106877)**	
	1001092723	Ref	**Engine Components (D2011L03 Tier III) (SN 0300106878 through 0300123999)**	
401	7020026	1	Dipstick	
401	7020403	1	Seal, Ring	
401	70001002	1	Tube, Dipstick	
402	7020465	2	Cap, Filler	
403	7020495	1	Pump, Oil Lube (Not Shown)	
403	7020468	1	Seal Between Oil Pump and Engine Block (Not Shown)	
404	7016331	1	Filter, Oil	
404	7027236	1	Sensor, Oil Temperature (Not Shown - Located in Rear Of Filter Mount)	
405		Ref	Pump, Injector Options:	
405	7027246	3	Series A Injector	
405	7027608	3	Series B Injector	
405	7027609	3	Series C Injector	
405	7027610	3	Series D Injector	
405	7020447	3	Gasket, Injector Pump	
406	7020023	1	Filter, Fuel	
406	70001423	1	Bracket, Fuel Filter	
407	70000916	1	Pump Fuel Supply (was p/n 7027238)	
407	7020411	1	O-Seal Between Fuel Pump and Engine Block (Not Shown)	
407	70001435	1	Replacement Filter	
408	7020449	3	Gasket, Intake Manifold (Not Shown)	
408	7020471	3	Gasket, Exhaust (Not Shown)	
409	7020408	1	V-Belt	
410		Ref	Sensor, Temperature Options:	
410	7027241	1	2000199 Engine **(SN 0300077683 through 0300085628)**	
410	7027791	1	2000275, 2000340 & 1001098601 Engines **(SN 0300085629 through 0300123999)**	
411	7000663	1	Alternator (was p/n 7020410)	
411	70002234	1	Bracket, Adjusting	
411	7020464	1	Regulator, Voltage (Not Shown)	
412	7020479	1	Starter	
412	7026608	1	Relay, Starter	

ITEM	PART NUMBER	QTY	DESCRIPTION	REV
413	7024565	1	Tacho-Generator	
413	70003932	1	Spacer, Sleeve	
414		Ref	Actuator, Throttle Options:	
414	7020458	1	2000199 Engine **(SN 0300077683 through 0300085628)**	
414	7027792	1	2000275, 2000340 & 1001098601 Engines **(SN 0300085629 through 0300123999)**	
414	7027276	2	Spring, Replacement	
415		Ref	Sensor, Oil Pressure Options:	
415	7020461	1	2000199 Engine **(SN 0300077683 through 0300085628)**	
415	7027790	1	2000275, 2000340 & 1001098601 Engines **(SN 0300085629 through 0300123999)**	
418	7020459	1	Thermostat	
418	7020460	1	Spring, Compression	
419	See Note	1	Flywheel (Note: Not available for purchase)	
419	7024579	1	Rim, Gear	
420	7027245	1	Filter, Fuel	
421	7027239	1	Solenoid, Start	
422	7027795	1	Module, EMR2 (All Engines Except P/N 2000217)	
423	7027769	2	Connector, Radiator	
424	70001181	1	Valve (Not Shown - Located Behind Oil Filter)	
425		Ref	Gasket, Head Options (Not Shown):	
425	70003479	1	Gasket - 1 Notch	
425	70003480	1	Gasket - 2 Notch	
425	70003481	1	Gasket - 3 Notch	

FIGURE 2-14. USA BUILT MACHINES/FORD ENGINE INSTALLATION (SN 0300065080 through 0300078472)

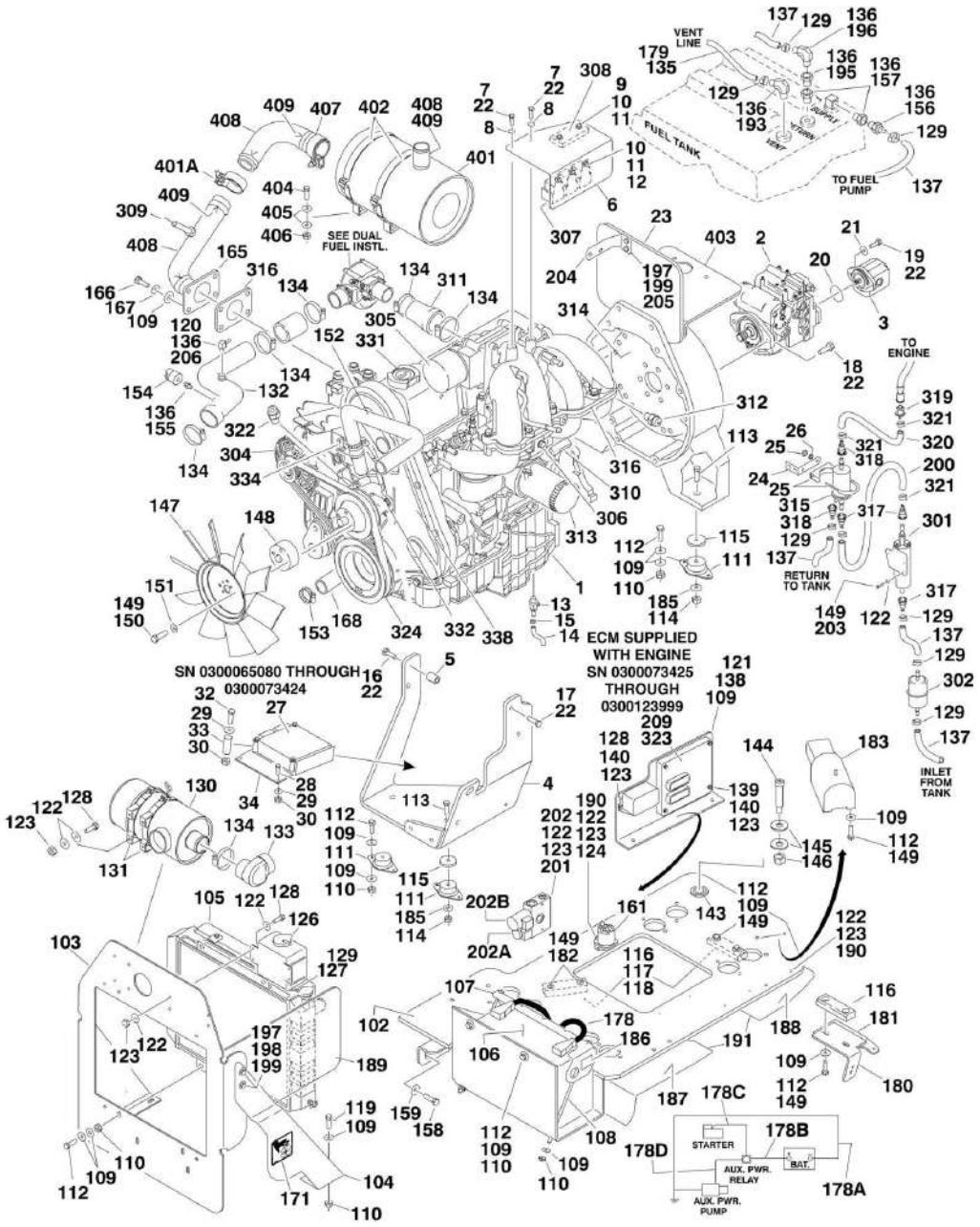

FIGURE 2-14. USA BUILT MACHINES/FORD ENGINE INSTALLATION (SN 0300065080 through 0300078472)

ITEM	PART NUMBER	QTY	DESCRIPTION	REV
		Ref	**ENGINE ASSEMBLIES**	
	0270944	Ref	**2WD Standard Gas Machines (SN 0300065080 through 0300073424)**	1-C
	0270946	Ref	**4WD Standard Gas Machines (SN 0300065080 through 0300073424)**	2-C
		Ref	**2WD Dual Fuel Machine Options:**	
	0271020	Ref	**2WD Dual Fuel Machine (SN 0300065080 through 0300073424)**	2-C
	0272891	Ref	**2WD Dual Fuel Machine (SN 0300073425 through 0300078472)**	2-B
		Ref	**4WD Dual Fuel Machine Options:**	
	0271022	Ref	**4WD Dual Fuel Machine (SN 0300065080 through 0300073424)**	3-B
	0272893	Ref	**4WD Dual Fuel Machine (SN 0300073425 through 0300078472)**	3-B
1		Ref	Engine - Ford LRG-425 Options:	
1	2000172	1	Standard Gas Machines **(SN 0300065080 through 0300073424)**	
1	2000174	1	Dual Fuel Machines **(SN 0300065080 through 0300065498)**	
1	2000188	1	Dual Fuel Machines **(SN 0300065499 through 0300073424)**	
1	2000197	1	Dual Fuel Machines **(SN 0300073425 through 0300078472)**	
2		Ref	Piston Pump Assembly Options:	
2	3600316	1	Piston Pump Assembly (2WD Machines) (See PISTON PUMP ASSEMBLY (SERIES M46 PUMP) for Breakdown)	
2		Ref	Piston Pump Assembly (4WD Machines) (See PISTON PUMP ASSEMBLY (SERIES 42 PUMP) for Breakdown) Options:	
2	3600296	NLA	Piston Pump Assembly (Use p/n 3600385) **(SN 0300065080 through 0300073424)**	
2	3600385	1	Piston Pump Assembly **(SN 0300073425 through 0300078472)**	
3	3600318	1	Gear Pump Assembly (See GEAR PUMP ASSEMBLY for Breakdown)	
3	7023929	1	Seal Kit - 3600318 Pump	
4	3539972	NLA	Plate, Engine Mounting - Front (Use p/n 4846806)	
5	4566605	1	Tube, Spacer	
6	3571498	1	Plate, Module Mounting	
7	0700810	2	Bolt M8 x 20mm	
8	4751500	2	Flatwasher 5/16in Regular	
9	0721010	2	Bolt #10-24NC x 1-1/4in	
10	3311005	5	Locknut #10-24NC	
11	4751000	8	Flatwasher #10 Regular	
12	0721006	3	Bolt #10-24NC x 3/4in **(SN 0300065080 through 0300073424)**	
13	4640989	1	Valve, Oil Drain	
14	2750532	1 ft /30.5cm	Hose	
15	1320022	2	Clamp	
16	0701022	2	Bolt M10 x 70mm	
17	0701014	2	Bolt M10 x 30mm	
18	0641812	2	Bolt 1/2in-13NC x 1-1/2in	
19	3931620	2	Capscrew, Socket Head 3/8in-16NC x 1-1/4in	
20	3790152	1	O-Ring	

ITEM	PART NUMBER	QTY	DESCRIPTION	REV
21	4891600	2	Flatwasher 3/8in Hardened	
22	0100011	AR	Compound, Locking	
23	3571502	1	Plate, Heat Shield	
24	0902539	1	Bracket, Fuel Filter/Pressure Regulator	
25	1320019	2	Clamp, Exhaust	
26	4761500	2	Lockwasher 5/16in	
27	1600314	1	Controller, ECM **(SN 0300065080 through 0300073424)**	
27	3124114	1	Service Manual, Ford EFI System Diagnostic	
28	0641408	2	Bolt 1/4in-20NC x 1in **(SN 0300065080 through 0300073424)**	
29	4751400	6	Flatwasher 1/4in Regular **(SN 0300065080 through 0300073424)**	
30	3311405	6	Locknut 1/4in-20NC **(SN 0300065080 through 0300073424)**	
31	1320060	1	Clamp (Not Shown) **(SN 0300065080 through 0300073424)**	
32	1641422	4	Bolt 1/4in-20NC x 2-3/4in **(SN 0300065080 through 0300073424)**	
33	4568158	4	Stand-Off **(SN 0300065080 through 0300073424)**	
34	3572600	1	Plate, Mounting - ECM **(SN 0300065080 through 0300073424)**	
		Ref	**ENGINE INSTALLATIONS**	
	0270943	Ref	**2WD Standard Gas Machines (SN 0300065080 through 0300073424)**	5-E
	0270945	Ref	**4WD Standard Gas Machines (SN 0300065080 through 0300073424)**	4-D
		Ref	**2WD Dual Fuel Machine Options:**	
	0271019	Ref	**2WD Dual Fuel Machine (SN 0300065080 through 0300073424)**	3-C
	0272892	Ref	**2WD Dual Fuel Machine (SN 0300073425 through 0300078472)**	5-C
		Ref	**4WD Dual Fuel Machine Options:**	
	0271021	Ref	**4WD Dual Fuel Machine (SN 0300065080 through 0300073424)**	3-C
	0272894	Ref	**4WD Dual Fuel Machine (SN 0300073425 through 0300078472)**	5-C
102	4845613	NLA	Tray Weldment (Use p/n 4340745)	
103	3570571	1	Mount, Radiator	
104	3570607	1	Support, Radiator - Left Side	
105	3620040	1	Radiator	
105	8180311	1	Cap, Radiator (was p/n 7019656)	
106		Ref	Battery Options:	
106	0400075	1	Battery (Wet)	
106	7016180	1	Battery (Dry)	
107	0181727	1	Tie-Down	
108	0630498	2	Bolt, Tie-Down	
109	4751600	40	Flatwasher 3/8in Regular	
110	3311605	31	Locknut 3/8in-16NC	
111	3200378	4	Mount, Rubber	
112	0641610	24	Bolt 3/8in-16NC x 1-1/4in	
113	0641820	4	Bolt 1/2in-13NC x 2-1/2in	
114	3311805	4	Locknut 1/2in-13NC	
115	4740274	4	Washer, Snubbing	
116	3340399	3	Pad, Wear	
117	4070497	4	Shim 1/8in	
118	4070498	2	Shim 1/16in	
119	0641612	2	Bolt 3/8in-16NC x 1-1/2in	

ITEM	PART NUMBER	QTY	DESCRIPTION	REV
120	2180467	1	Fitting, Barbed Elbow	
121		Ref	Plate, ECM Relay Mount Options:	
121	Not Required	1	2WD/4WD **(SN 0300065080 through 0300073424)**	
121	3574162	1	Plate, ECM Relay Mount (2WD) **(SN 0300073425 through 0300076725)**	
121	3574496	1	Plate, ECM Relay Mount (2WD) **(SN 0300076726 through 0300078472)**	
121	3574162	1	Plate, ECM Relay Mount (4WD) **(SN 0300074263 through 0300076725)**	
121	3574496	1	Plate, ECM Relay Mount (4WD) **(SN 0300076726 through 0300078472)**	
122	4751400	37	Flatwasher 1/4in Regular	
123	3311405	21	Locknut 1/4in-20NC	
124	4791400	2	Starwasher 1/4in	
125	0641609	AR	Bolt 3/8in-16NC x 1-1/8in	
126	1580011	1	Tank, Coolant Recovery	
127	2720058	2 ft/51cm	Hose, Coolant Recovery	
128	0641406	11	Bolt 1/4in-20NC x 3/4in	
129	1320022	9	Clamp	
130	1340060	1	Air Cleaner Assembly	
130	7012664	1	Element, Air Cleaner	
131	0340041	2	Band, Air Cleaner	
132		Ref	Tube, Air Intake Options:	
132	4846011	1	Standard Gas Machines	
132	4846046	1	Dual Fuel Machines	
133	0080201	1	Elbow, Rubber	
134	1320016	2	Clamp	
135	2750532	8 ft/2.4m	Hose	
136	0100020	AR	Sealant, Pipe	
137	2720058	11.5 ft /3.5m	Hose, Fuel Line	
138	0641608	2	Bolt, 3/8in-16NC x 1in **(SN 0300065080 through 0300076726)**	
139	0641414	4	Bolt, 1/4in - 20NC x 1-3/4in	
140	4711400	12	Flatwasher, 1/4in Thin	
143	0962172	1	Bushing, Flanged	
144	3900254	1	Screw, Shoulder 3/4in x 4in	
145	4752200	2	Flatwasher 3/4in Regular	
146	3312005	1	Locknut 5/8in-11NC	
147	2060025	1	Fan	
148	0080214	1	Spacer, Fan	
149	0100011	AR	Compound, Locking	
150	0700819	4	Bolt M8 x 55mm	
151	4831900	4	Lockwasher M8	
152	2720436	1	Hose, Radiator - Top	
153	1320012	4	Clamp, Hose	
154	4360392	1	Indicator, Clogged Filter	
155	2180798	1	Fitting, Restrictor Indicator	
156	2220794	1	Fitting, Barbed	
157	2220273	2	Fitting, Reducer	
158	0642010	1	Bolt 5/8in-11NC x 1-1/4in	
159	4752000	1	Flatwasher 5/8in Regular	
161	3740067	1	Relay (Auxiliary Power)	

ITEM	PART NUMBER	QTY	DESCRIPTION	REV
165	4567878	1	Tube, Exhaust	
166	0701012	4	Bolt M10 x 25mm	
167	4832000	4	Lockwasher M10	
168	2720435	1	Hose, Radiator - Bottom	
169	0641604	1	Bolt 3/8in-6NC x 1/2in (2WD - Dual Fuel Machines Only)	
170	4240099	2	Tie-Strap **(SN 0300065080 through 0300073424)**	
171	1703162	2	Decal - Fan Blade	
174	1701542	1	Decal - Gas (Not Shown - Located on Hood)	
178	2902059	1	Battery Cable Kit	A
178A	7016840	1	Cable (Battery - to Ground)	
178B	7016839	1	Cable (Battery + to Auxiliary Relay)	
178C	7016841	1	Cable (Auxiliary Relay to Starter)	
178D	7016842	1	Cable (Auxiliary Relay to Auxiliary Pump)	
180	0902443	1	Bracket, Latch Mounting	
181	0902444	1	Bracket, Hood Support	
182	0741610	2	Screw, Socket Head Countersunk 3/8in-16NC x 1-1/4in	
183	3600279	1	Auxiliary Pump Assembly (See AUXILIARY PUMP ASSEMBLY For Breakdown)	
184	2200222	1	Plug, Pipe (Not Shown - Located at Bottom of Fuel Tank)	
185	4751800	4	Flatwasher 1/2in Regular	
186	1703876	1	Decal - Engine Tray Swing	
187	3571008	1	Plate, Baffle	
188	3571009	1	Plate, Baffle	
189	3571019	1	Plate, Air Panel	
190	0641410	4	Bolt 1/4in-20NC x 1-1/4in	
191	3960438	28 in /46cm	Seal, Hood	
192	4791600	2	Starwasher 3/8in **(SN 0300065080 through 0300073424)**	
193	2220313	1	Fitting, Barbed	
195	2220250	1	Fitting, Reducer	
196	2220805	1	Fitting, Elbow Barbed	
197	0641506	2	Bolt 5/16in-18NC x 3/4in	
198	4751500	4	Flatwasher 5/16in Regular	
199	3311505	2	Locknut 5/16in-18NC	
200	2720496	1	Hose, High Pressure	
201	0641407	3	Bolt 1/4in-20NC x 7/8in	
202		Ref	Valve Options:	
202	4641061	1	Valve Used on 2WD Machines (Not Shown)	
202	7017479	1	Cartridge without Coil (4641061 Valve)	
202	7012518	1	Seal Kit - 7017479 Cartridge	
202	7012943	1	Coil (4641061 Valve)	
202	4641108	NLA	Valve Used on 4WD Machines (Use p/n 1001099391 Valve)	
		Ref	**Note: Original Equipment Valve may have been replaced with Service Replacement Valve. Identify p/n stamped on valve before ordering parts.**	
202A	7012974	1	Cartridge without Coil (4641108 Valve)	
202A	7010543	1	Seal Kit - 7012974 Cartridge	
202A	7012941	1	Cartridge without Coil (1001099193 Valves)	
202A	7010543	1	Seal Kit - 7012974 Cartridge	
202A	7012944	1	Coil	
202B	7012995	1	Cartridge without Coil	
202B	7012518	1	Seal Kit - 7012995 Cartridge	

ITEM	PART NUMBER	QTY	DESCRIPTION	REV
202B	7012943	1	Coil	
203	0641418	2	Bolt 1/4in-20NC x 2-1/4in	
204	0902724	1	Bracket, LP Mounting	
205	4711500	4	Flatwasher 5/16in Thin	
206	1320032	1	Clamp	
207	1320222	2	Clamp, J-Clip 3/8in (Not Shown) **(SN 0300065080 through 0300076726)**	
208	1320223	1	Clamp, J-Clip 1/2in (Not Shown)	
209	0100048	AR	Grease, Dielectric	
210	0721005	2	Screw (Not Shown)	
211	3311005	2	Locknut (Not Shown)	
212	4750800	4	Flatwasher #8 Regular (Not Shown)	
		Ref	**ENGINE COMPONENTS**	
	2000172	Ref	**Standard Gas Machines (SN 0300065080 through 0300073424)**	
	2000174	Ref	**Dual Fuel Machines (SN 0300065080 through 0300065498)**	
	2000188	Ref	**Dual Fuel Machines (SN 0300065499 through 0300073424)**	
	2000197	Ref	**Dual Fuel Machines (SN 0300073425 through 0300078473)**	
301	3600377	1	Fuel Pump and Isolator Assembly (was p/n 7022133)	
301	7022134	1	Harness, Fuel Pump Wiring	
302	91083218	1	Filter, Fuel (was p/n 7022135)	
303	7019986	1	Starter (Not Shown)	
304	7019977	1	Alternator with Regulator and Pulley	
304	7000897	1	Alternator without Pulley and Regulator	
304	7027402	1	Belt, Alternator (was p/n 7019979)	
305	7023655	1	Actuator, Throttle (2000172/2000174/2000188 Engines)	
305	7023683	1	Actuator, Throttle (2000193 Engine)	
305	7023652	1	Plate, Actuator Adapter	
305	7023654	1	Gasket, Actuator to Adapter Plate	
305	7023653	2	Bolt (Adapter Plate to Intake Manifold)	
305	7023656	4	Bolt (Actuator to Adapter Plate)	
306	7019996	1	Sensor, Air Temperature (was p/n 7023661)	
306	7023662	1	Bracket, Air Temperature Sensor	
307	7023663	1	Harness, ECM (2000172/2000174/2000188 Engines)	
307	7023613	3	Relay (2000172/2000174/2000188 Engines)	
307	7023681	1	Harness, EPM (2000193 Engine)	
308	7022139	1	Sensor, MAP	
309	7019994	1	Sensor, EGR (2000172/2000174/2000188 Engines)	
310	2420187	1	Dipstick (was p/n 7022140)	
310	4564281	1	Tube, Dipstick	
311	7023658	1	Outlet, Air Cleaner	
312	7023637	1	Switch, Oil Pressure Sender	
313	7021868	1	Filter, Oil (was p/n 7022147, 7022173 & 7014501)	
314	1660250	1	Coupling, Pump (was p/n 7016662)	
315	7019993	1	Pressure Regulator and Filter Assembly	
316	70002307	1	Gasket, Manifold (Manifold to Pipe) (was p/n 7040050)	
316	7022143	1	Gasket, Manifold (Manifold to Head) (Not Shown)	
317	7022158	3	Connector	
318	7022159	2	Connector	
319	7022160	1	Connector	
320	7022161	2	Tube, Supply	
321	7022162	2	Clamp	

ITEM	PART NUMBER	QTY	DESCRIPTION	REV
322	7022178	1	Sensor, Crank	
322	7022179	1	Sensor, Camshaft (Not Shown)	
323	1600363	1	EPM Module (2000197 Engine)	
324	7027402	1	Belt, Drive (was p/n 7019979)	
324	70002567	1	Tensioner, Belt	
325	7019925	1	PCV Valve (Not Shown)	
326	7022157	1	Wire Set - Spark Plug (Not Shown)	
326	7019932	4	Spark Plug (Not Shown)	
327	7019976	1	Flywheel (Not Shown)	
327	7022180	1	Gear, Ring (Not Shown)	
328	7022144	1	Gasket, Upper Manifold Throttle (Not Shown)	
329	7025124	1	Gasket Kit - Upper (Not Shown) (was p/n 7022148)	
330	7022149	1	Gasket Kit - Lower (Not Shown)	
331	7022151	1	Cap, Oil Filler	
332	7022153	1	Pump, Water	
332	7022154	1	Gasket, Water Pump	
333	7019930	1	Coil, Ignition (Not Shown) (2000174 Engine)	
334	7022155	1	Sensor, Water Temperature	
334	7027411	1	Sender, Water Temperature	
334	7022156	1	Thermostat, Water Temperature (Not Shown)	
335	7025134	1	Gasket, Water Outlet (Not Shown)	
336	7023657	1	Harness, TPS Harness (Not Shown)	
337	7019933	1	Kit, Carburetor Repair (Not Shown) (2000174 Engine)	
338	7022150	1	Belt, Timing	
	3124114	1	Service Manual, Ford EFI System Diagnostic	
		Ref	**MUFFLER INSTALLATIONS**	
	0258252	Ref	**Standard Spark Arresting**	2
	0258253	Ref	**Optional Catalytic**	3
401		Ref	Muffler Options:	
401	3220113	1	Standard Spark Arresting	
401	3220114	1	Optional Catalytic	
401A	70001017	2	Clamp, Muffler	
402	0340046	2	Band	
403	0902457	1	Bracket, Muffler	
404	0641507	4	Bolt 5/16in-18NC x 7/8in	
405	4711500	8	Flatwasher 5/16in Thin	
406	3311505	4	Locknut 5/16in-18NC	
407	4567073	1	Tube, Exhaust	
408	4100025	21 in /53cm	Sleeve, Fiberglass	
409	4920385	16 in /41cm	Wire, Mechanics	

FIGURE 2-15. USA BUILT MACHINES/FORD ENGINE INSTALLATION (SN 0300078473 through 0300123999)

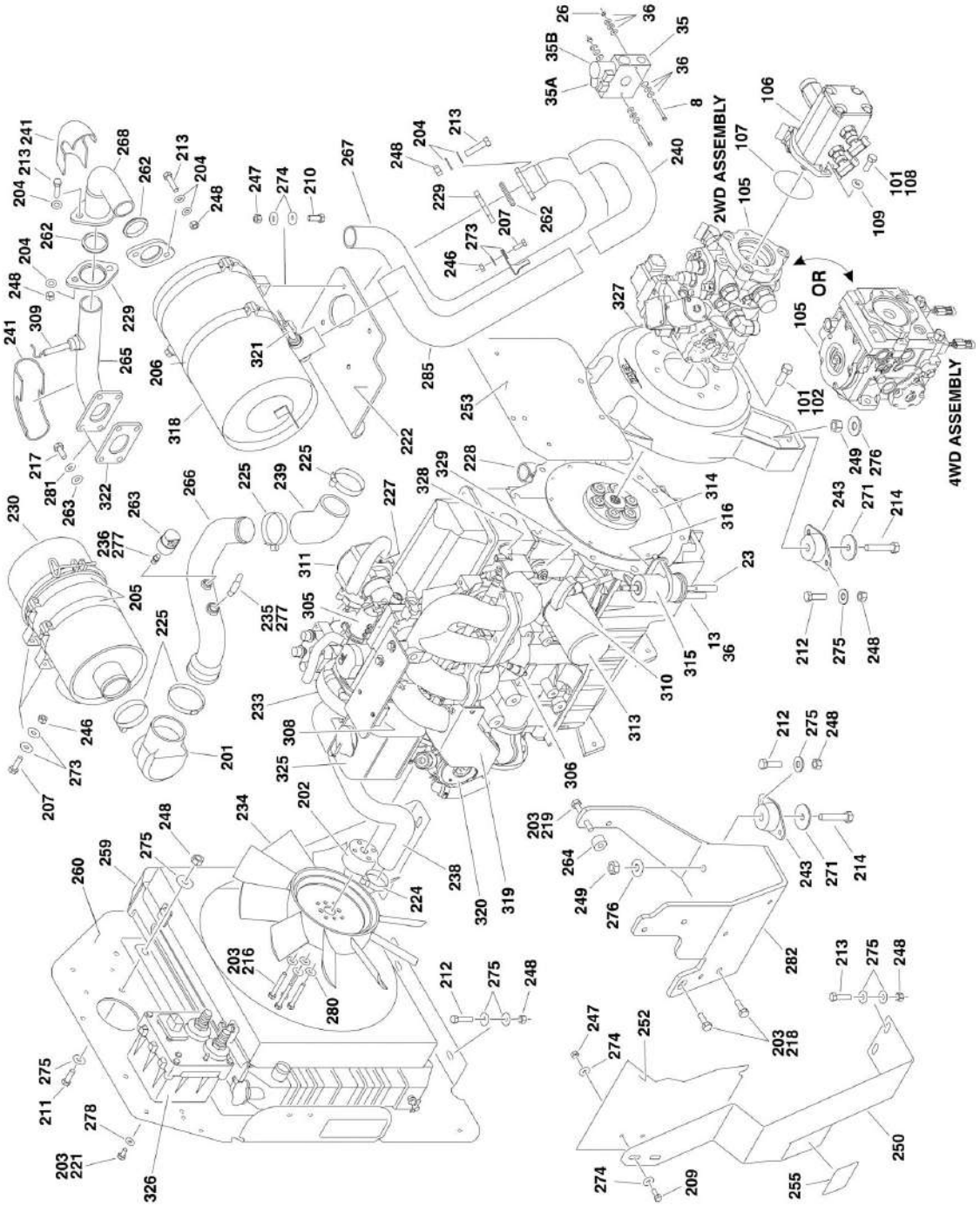

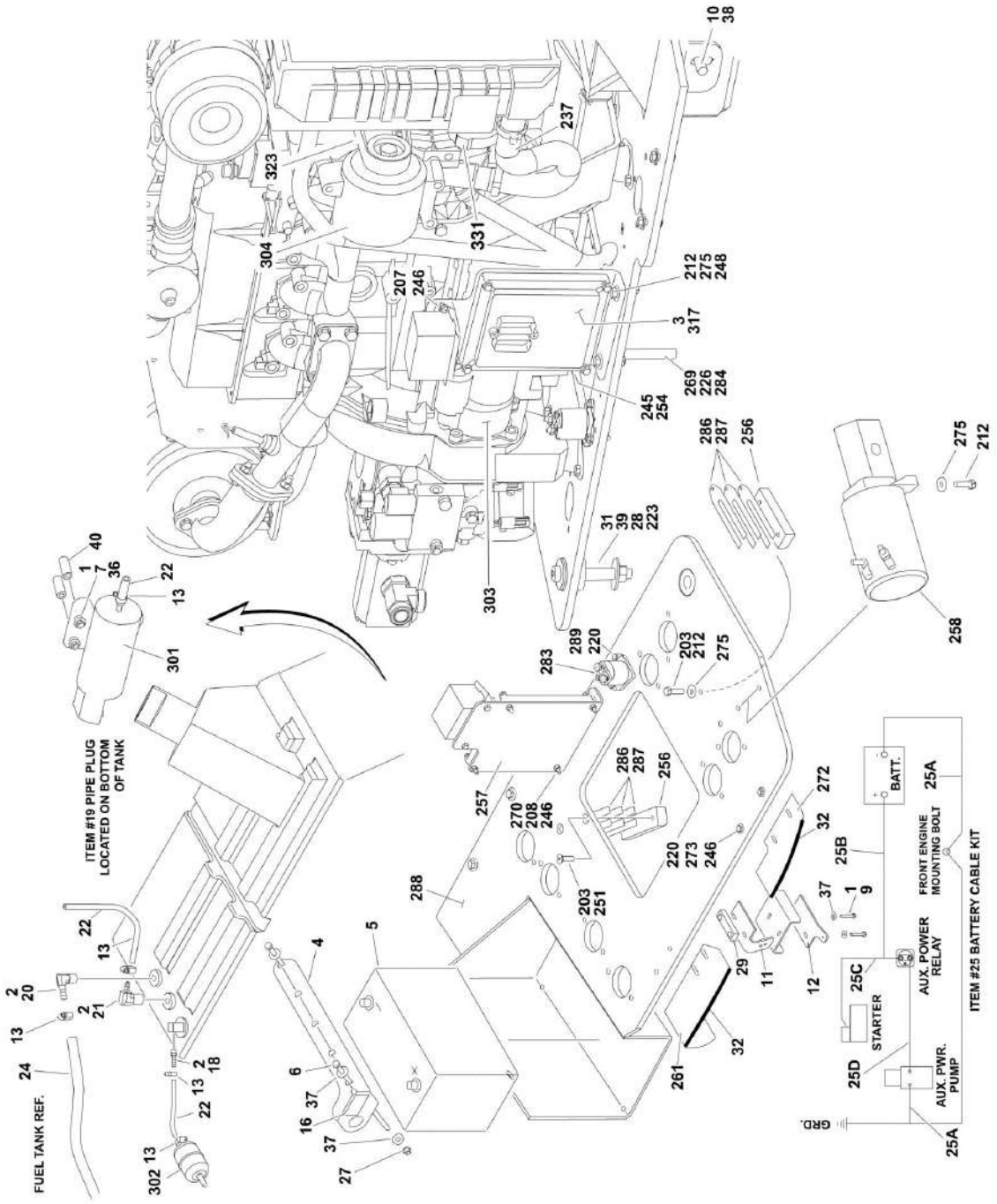
ITEM #19 PIPE PLUG LOCATED ON BOTTOM OF TANK
FUEL TANK REF.
FRONT ENGINE MOUNTING BOLT
AUX. POWER RELAY
STARTER
AUX. PWR. PUMP
BATT.
GRD.
ITEM #25 BATTERY CABLE KIT

FIGURE 2-15. USA BUILT MACHINES/FORD ENGINE INSTALLATION (SN 0300078473 through 0300123999)

ITEM	PART NUMBER	QTY	DESCRIPTION	REV
		Ref	**FORD ENGINE INSTALLATIONS**	
		Ref	**2WD**	
	0274013	Ref	**Ford Engine Installation (2WD) (SN 0300078473 through 0300087630)**	B
	0274610	Ref	**Ford Engine Installation (2WD) (SN 0300087631 through 0300123999)**	B
		Ref	**4WD**	
	0274014	Ref	**Ford Engine Installation (4WD) (SN 0300078473 through 0300087630)**	B
	0274611	Ref	**Ford Engine Installation (4WD) (SN 0300087631 through 0300123999)**	B
1	0100011	AR	Compound, Locking	
2	0100020	AR	Sealant, Pipe	
3	0100048	AR	Grease, Dielectric	
4	0181727	1	Angle, Battery Hold Down	
5	0400075	1	Battery (Wet)	
6	0630498	2	Bolt, Battery Hold Down	
7	0641422	3	Bolt 1/4in-20NC x 7/8in (Not Shown)	
8	0641418	2	Bolt 1/4in-20NC x 2-1/4in	
9	0641610	2	Bolt 3/8in-16NC x 1-1/4in	
10	0642010	1	Bolt 5/8in-11NC x 1-1/4in	
11	0902443	1	Bracket, Hood Latch Mount	
12	0902444	1	Bracket, Hood Support	
13	1320022	7	Clamp, Fuel Line	
14	1701542	1	Decal, Gas (Not Shown)	
15	1701543	1	Decal, LPG (Not Shown)	
16	1703876	1	Decal, Engine Tray Swing	
18	2180348	1	Fitting, Barbed	
19	2200222	1	Plug, Pipe	
20	2220313	1	Fitting, Elbow Barbed	
21	2221176	1	Fitting, Elbow	
22	2720058	11.5 ft /3.5m	Hose	
23	2720496	1	Hose	
24	2750532	7 ft/2.13m	Hose	
25	2902059	1	Battery Cable Kit	A
25A	7016840	1	Cable (Battery - to Ground)	
25B	7016839	1	Cable (Battery + to Auxiliary Relay)	
25C	7016842	1	Cable (Auxiliary Relay to Starter)	
25D	7016841	1	Cable (Auxiliary Relay to Auxiliary Pump)	
26	3311405	2	Locknut 1/4in-20NC	
27	3311605	2	Locknut 3/8in-16NC	
28	3312005	1	Locknut 5/8in-11NC	
29	3340399	1	Pad, Wear	
30	3790012	1	O-Ring (Not Shown - Located in Console Box)	
31	3900254	1	Screw, Shoulder	
32	3960438	2.3 ft/.7m	Seal, Self Gripping	
33	4240099	AR	Wire, Tie (Not Shown)	
34	4360336	1	Switch, Toggle (Not Shown - Located in Console Box)	
35		Ref	Valve Options:	

ITEM	PART NUMBER	QTY	DESCRIPTION	REV
35	4641061	1	Valve Used on 2WD Machines (Not Shown)	
35	7017479	1	Cartridge without Coil (4641061 Valve)	
35	7012518	1	Seal Kit - 7017479 Cartridge	
35	7012943	1	Coil (4641061 Valve)	
35	4641108	NLA	Valve Used on 4WD Machines (Use p/n 111099391)	
		Ref	**Note: Original Equipment Valve may have been replaced with Service Replacement Valve. Identify p/n stamped on valve before ordering parts.**	
35A	7012974	1	Cartridge without Coil (4641108 Valve)	
35A	7010543	1	Seal Kit - 7012974 Cartridge	
35A	7012941	1	Cartridge without Coil (1001099193 Valve)	
35A	7010543	1	Seal Kit - 7012974 Cartridge	
35A	7012944	1	Coil	
35B	7012995	1	Cartridge without Coil	
35B	7012518	1	Seal Kit - 7012995 Cartridge	
35B	7012943	1	Coil	
36	4751400	15	Flatwasher, 1/4in Regular	
37	4751600	6	Flatwasher, 3/8in Regular	
38	4752000	1	Flatwasher, 5/8in Regular	
39	4752200	2	Flatwasher, 3/4in Regular	
40	4568114	2	Tube, Spacer	
		Ref	**ENGINE AND PUMPS SUB-ASSEMBLY**	
		Ref	**2WD**	
	2000254	Ref	**Engine and Pumps Sub-Assembly (2WD) (SN 0300078473 through 0300086916)**	
	2000316	Ref	**Engine and Pumps Sub-Assembly (2WD) (SN 0300086917 through 0300123999)**	
		Ref	**4WD**	
	2000255	Ref	**Engine and Pumps Sub-Assembly (4WD) (SN 0300078473 through 0300086916)**	
	2000317	Ref	**Engine and Pumps Sub-Assembly (4WD) (SN 0300086917 through 0300123999)**	
101	0100011	AR	Compound, Locking	
102	0641812	2	Bolt 1/2in-13NC x 1-1/2in	
104	2030004	1	Antifreeze (Not Shown)	
105		Ref	Piston Pump Assembly with Fittings Options:	
105	3600406	1	Piston Pump Assembly with Fittings (2WD) (See PISTON PUMP ASSEMBLY (SERIES M46 PUMP) for Breakdown)	
105	3600407	1	Piston Pump Assembly with Fittings (4WD) (See PISTON PUMP ASSEMBLY (SERIES 42 PUMP) for Breakdown)	
106	3600408	1	Gear Pump Assembly with Fittings (See GEAR PUMP ASSEMBLY for Breakdown)	
107	3790152	1	O-Ring	
108	3931620	2	Screw 3/8in-16NC x 1-1/4in	
109	4891600	2	Flatwasher, 3/8in Hardened	
		Ref	**ENGINE ASSEMBLY**	
	2000212	Ref	**Engine Assembly (SN 0300078473 through 0300086916)**	B
	2000314	Ref	**Engine Assembly (SN 0300086917 through 0300123999)**	D
201	0080201	1	Adapter, Elbow	
202	0080214	1	Adapter, Fan	
203	0100011	AR	Compound, Locking	
204	4711600	12	Flatwasher 3/8in Thin	
205	0340041	2	Band, Muffler Bracket	

ITEM	PART NUMBER	QTY	DESCRIPTION	REV
206	0340046	2	Band, Muffler	
207	0641406	7	Bolt 1/4in-20NC x 3/4in	
208	0641414	4	Bolt 1/4in-20NC x 1-3/4in	
209	0641506	2	Bolt 5/16in-18NC x 3/4in	
210	0641507	4	Bolt 5/16in-18NC x 7/8in	
211	0641609	4	Bolt 3/8in-16NC x 1-1/8in	
212	0641610	18	Bolt 3/8in-16NC x 1-1/4in	
213	0641612	8	Bolt 3/8in-16NC x 1-1/2in	
214	0641820	4	Bolt 1/2in-13NC x 2-1/2in	
216	0700819	4	Bolt M8 x 55mm	
217	0701012	4	Bolt M10 x 25mm	
218	0701014	2	Bolt M10 x 30mm	
219	0701022	2	Bolt M10 x 70mm	
220	0641410	4	Bolt, 1/4in-20NC x 1-1/4in	
221	0760606	4	Bolt M6 x 12mm	
222	0902457	1	Bracket, Muffler	
223	0962172	1	Bushing, Flanged	
224	1320012	4	Clamp, Hose	
225	1320016	4	Clamp	
226	1320022	1	Clamp, Hose	
227	1320033	8	Clamp, Hose	
228	1320060	1	Clamp, Hose	
229	1321138	3	Flange, Exhaust	
230	1340060	1	Air Cleaner Assembly	
230	7012664	1	Element, Air Cleaner	
233	2000207	1	Engine, Ford LRG-425 Tier II	
234	2060025	1	Fan	
235	2180467	1	Fitting, Barbed	
236	2180798	1	Fitting, Restrictor Indicator **(SN 0300078473 through 0300086916)**	
237	2720435	1	Hose, Radiator - Bottom	
238	2720436	1	Hose, Radiator - Top	
239	2720514	1	Hose, High Pressure Fuel Line	
240	2820172	1	Shield, Insulated Exhaust	
241	2820173	2	Shield, Insulated Exhaust	
243	3200406	4	Mount, Rubber	
245	0641604	1	Bolt 3/8in-16NC x 1/2in	
246	3311405	13	Locknut 1/4in-20NC	
247	3311505	6	Locknut 5/16in-18NC	
248	3311605	24	Locknut 3/8in-16NC	
249	3311805	4	Locknut 1/2in-13NC	
250		Ref	Support, Radiator Options:	
250	3570607	1	Support, Radiator **(SN 0300078473 through 0300082440)**	
250	3573667	1	Support, Radiator **(SN 0300082441 through 0300123999)**	
251	0741610	2	Screw, Countersunk 3/8in-16NC x 1-1/4in	
252	3571019	1	Plate, Air Panel	
253	3571502	1	Shield, Heat	
254	1320223	1	Clamp, "J" Clip	
255	1703162	2	Decal, Fan Blade	
256	3340399	2	Pad, Wear	
257	3574496	1	Plate, EPM/Relay Mounting	
258	3600279	1	Auxiliary Pump Assembly (See AUXILIARY PUMP ASSEMBLY	

ITEM	PART NUMBER	QTY	DESCRIPTION	REV
			For Breakdown)	
259	3620040	1	Radiator	
259	8180311	1	Cap, Radiator (was p/n 7019656)	
260	3570571	1	Plate, Radiator Mount	
261	3571008	1	Plate, Air	
262	3960591	3	Gasket, Exhaust	
263	4360392	1	Indicator, Clogged Filter	
264	4566605	1	Spacer	
265	4567878	1	Pipe, Exhaust (Engine to Flange)	
266		Ref	Tube, Air Intake Options:	
266	4568951	1	Tube, Air Intake **(SN 0300078473 through 0300086916)**	
266	4569173	1	Tube, Air Intake **(SN 0300086917 through 0300123999)**	
267	4568955	1	Tailpipe	
268	4569083	1	Pipe, Exhaust (Flange to Muffler)	
269	4640989	1	Valve, Oil Drain	
270	4711400	7	Flatwasher 1/4in Thin	
271	4740274	4	Washer, Snubbing	
272	3571009	1	Plate, Baffle	
273	4751400	26	Flatwasher 1/4in	
274	4751500	12	Flatwasher 5/16in	
275	4751600	33	Flatwasher 3/8in	
276	4751800	4	Flatwasher 1/2in	
277	0100020	AR	Sealant, Pipe	
278	4812000	4	Flatwasher M10	
280	4831900	4	Lockwasher M8	
281	4832000	4	Lockwasher M10	
282	4846806	1	Bracket, Engine Mounting (Front)	
283	3740067	1	Relay (Auxiliary Power)	
284	2750532	8 in/20cm	Hose	
285	2820174	1	Shield, Insulated Exhaust	
286	4070497	4	Shim	
287	4070498	2	Shim	
288	4340745	1	Mount, Engine LRG-425	
289	4791400	2	Washer, Star 1/4in	
	2000207	Ref	**ENGINE COMPONENTS**	
301	3600377	1	Fuel Pump and Isolator Assembly (was p/n 7027407 & p/n 7022133)	
302	91083218	1	Filter, Fuel (was p/n 7022135)	
303	7012679	1	Starter (was p/n 7027408)	
304	7019977	1	Alternator with Regulator and Pulley	
305	7023683	1	Actuator, Throttle	
305	7027404	1	Gasket, Actuator (Not Shown)	
306	7019996	1	Sensor, Air Temperature (was p/n 7023661)	
307	7023681	1	Harness, Engine Control (Not Shown) (was p/n 7027403)	
308	7022139	1	Sensor, MAP	
309	7023682	1	Sensor, HEGO	
310	2420187	1	Dipstick	
311	7027400	1	Mixer Assembly	
312	7022150	1	Belt, Timing (Not Shown)	
313	7021869	1	Filter, Oil	
314	1660250	1	Coupling, Pump	
314	7019976	1	Flywheel (Not Shown)	

SECTION 2 - TURNTABLE

ITEM	PART NUMBER	QTY	DESCRIPTION	REV
314	7022180	1	Gear Only	
315	7019993	1	Pressure Regulator and Filter Assembly	
315	7022134	1	Harness, Fuel Pump Wiring	
316	0902539	1	Bracket	
317	1600374	1	Module, EPM	
318	3220134	1	Muffler	
319	0903010	1	Bracket, LP Regulator	
320	7023698	1	Regulator, LP	
320	7023680	1	Filter/Shut-Off, LP	
321	7019994	1	Oxygen Sensor (was p/n 7027406)	
322	70002307	1	Gasket, Manifold (Manifold to Pipe)	
322	7022143	1	Gasket, Manifold (Manifold to Head) (Not Shown)	
323	7027402	1	Belt, Drive	
324	7027405	1	Spark Plug (Not Shown)	
325	1580011	1	Tank, Coolant Overflow	
326	7023699	1	Megajector, Fuel (Not Shown)	
327	2760112	1	Housing, Coupling	
328	7023637	1	Sender, Oil Pressure	
329	7022142	1	Switch, Oil Pressure	
330	7019925	1	PCV Valve (Not Shown)	
331	7019978	1	Tensioner, Belt	
332	7022155	1	Sensor, Water Temperature (Not Shown)	
332	7022156	1	Thermostat, Water Temperature (Not Shown)	
333	7022178	1	Sensor, Crank (Not Shown)	
334	7025134	1	Gasket, Water Outlet (Not Shown)	
335	7027410	1	Harness, Megajector (Not Shown)	
336	7027411	1	Unit, Water Sender (Not Shown)	
337	7027413	1	Harness, EPM Jumper (Not Shown)	
338	7022153	1	Pump, Water (Includes Gasket) (Not Shown)	

FIGURE 2-16. USA BUILT MACHINES/DUAL FUEL INSTALLATIONS (GAS MACHINES ONLY)

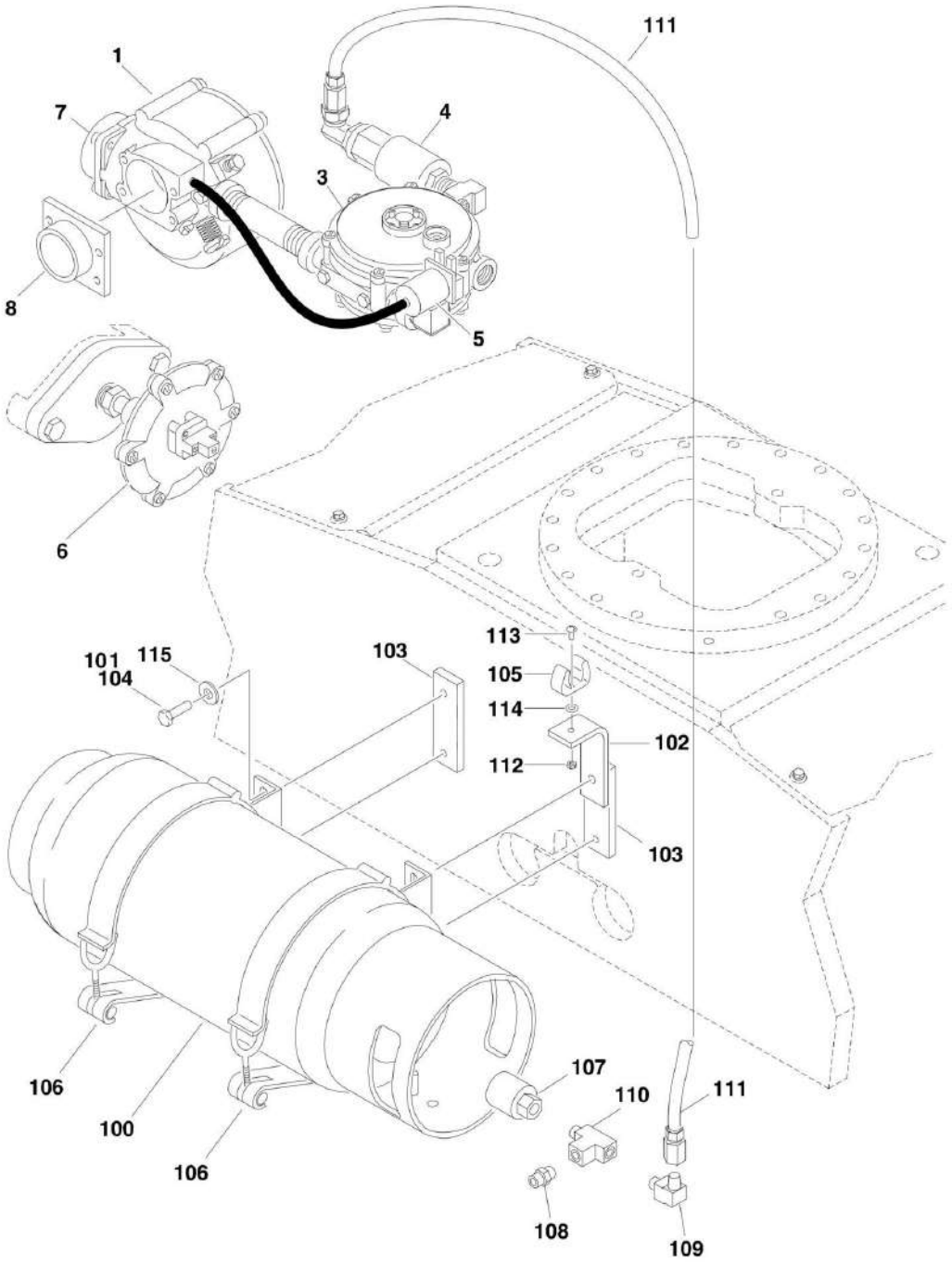

FIGURE 2-16. USA BUILT MACHINES/DUAL FUEL INSTALLATIONS (GAS MACHINES ONLY)

ITEM	PART NUMBER	QTY	DESCRIPTION	REV
		Ref	**DUAL FUEL ENGINE COMPONENTS (FORD ENGINE MACHINES)**	
		Ref	**NOTE: For GM Engine Machines Refer to GM Engine Installation.**	
	2000174	Ref	**Dual Fuel Engine Component (SN 0300065080 through 0300065498)**	B
	2000188	Ref	**Dual Fuel Engine Component (SN 0300065499 through 0300073424)**	A
	2000197	Ref	**Dual Fuel Engine Component (SN 0300073425 through 0300123999)**	C
	7023665	1	Dual Fuel Conversion Kit (Note: Includes hose, fittings, clamps and items indented below. For replacement hose, fittings and clamps supply locally.)	
1	7022165	1	Mixer	
1	7022171	1	Repair Kit - 7022165 Mixer	
3	7022167	1	Converter	
3	7022170	1	Repair Kit - 7022167 Convertor	
4	7023680	1	Filter, LP Shut-Off (was p/n 7022169)	
4	7023680	1	Electrical Connector Kit (Includes (1) 2 Position Connector, 2 Pins and 2 Seals) (was p/n 7023679)	
5	7022168	1	Valve, Solenoid	
6	4360188	1	Switch, Vacuum	
7	7023603	1	Adapter	
7	7023659	1	Gasket	
7	7023660	4	Screw M6 x 14mm	
8	7022166	1	Adapter	
		Ref	**LP TANK AND BRACKETS INSTALLATIONS**	
	0258033	Ref	**Standard Machines**	B
	0271391	Ref	**Semi-Track Machines (Not Shown - Located on Rear of Frame)**	A
100		Ref	Tank, LPG Options:	
100	4400275	1	Aluminum Tank	
100	4400420	1	Steel Tank	
101	0100011	AR	Compound, Locking	
102		Ref	Angle, Support Options:	
102	0181949	1	Angle, Support (Standard Machines)	
102	4846259	2	Bracket, Support (Semi-Track Machines)	
103		Ref	Bar, Mounting (Standard Machines Only)	
103	0362519	2	Bar, Mounting **(SN 0300065080 through 0300069273)**	
103	Not Required	0	Bar, Mounting **(SN 0300069274 through 0300123999)**	
103	Not Required	0	Bar, Mounting **(SN 1300000001 through 1300006000)**	
104	0641607	4	Bolt 3/8in-16NC x 7/8in	
105	1320218	1	Clamp, Spring (Standard Machines Only)	
106		Ref	Clamp Kit Options:	
106	1320220	1	Standard Machines	
106	1320023	1	Semi-Track Machines	
107	2180387	1	Fitting, LP	
108	2180389	1	Fitting	
109	2180504	1	Fitting, 90 (Standard Machines Only)	
110	2220290	1	Fitting, Tee	
111		Ref	Hose Options:	
111	2720149	1	Standard Machines	

SECTION 2 - TURNTABLE

ITEM	PART NUMBER	QTY	DESCRIPTION	REV
111	2720468	1	Semi-Track Machines	
112	3310805	1	Locknut #8-32NC (Standard Machines Only)	
113	3910808	1	Screw #8-32NC x 1in (Standard Machines Only)	
114	4750800	1	Flatwasher #8 Regular (Standard Machines Only)	
115	4751600	4	Flatwasher 3/8in Regular	

FIGURE 2-17. USA BUILT MACHINES/GM ENGINE INSTALLATION

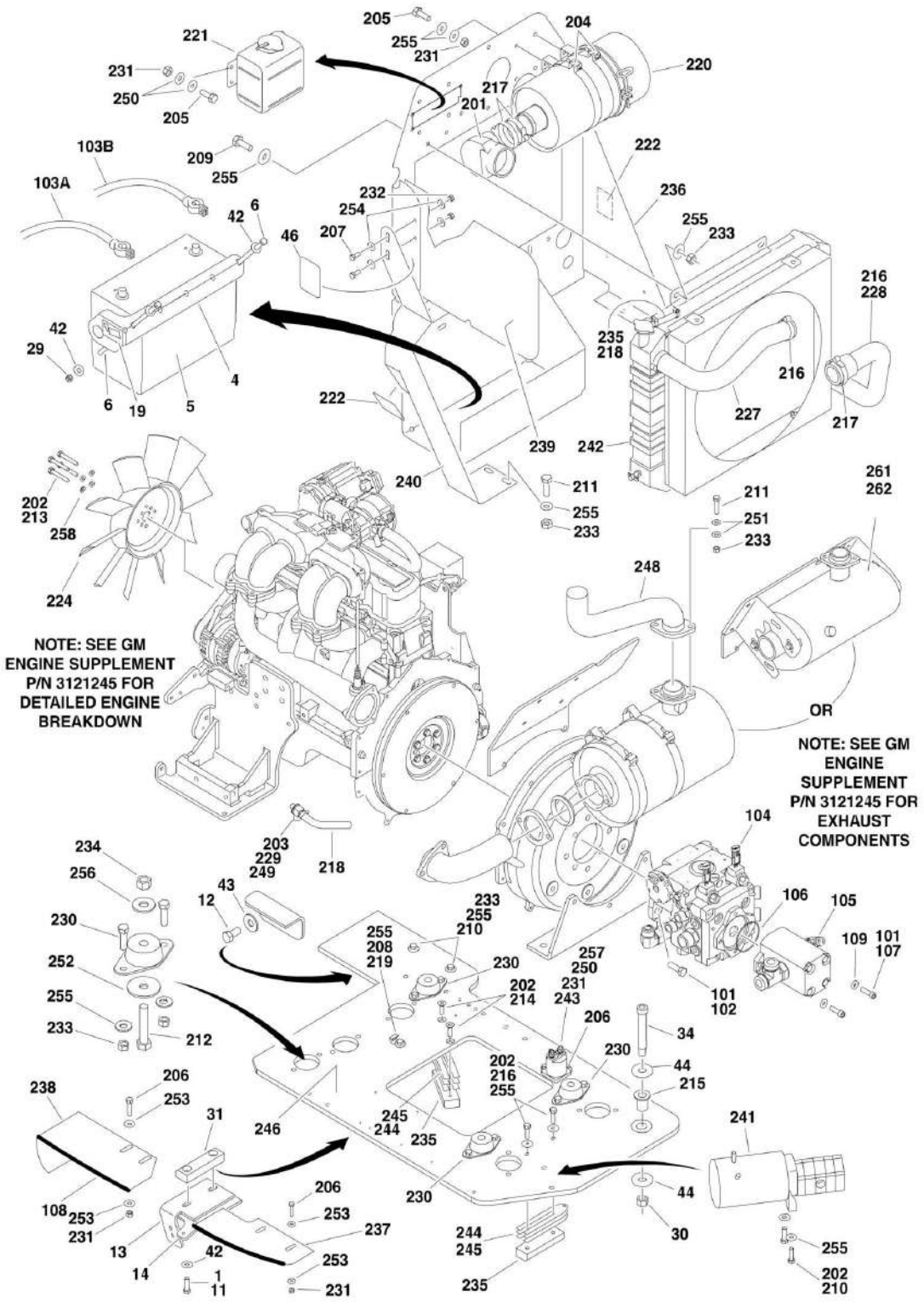

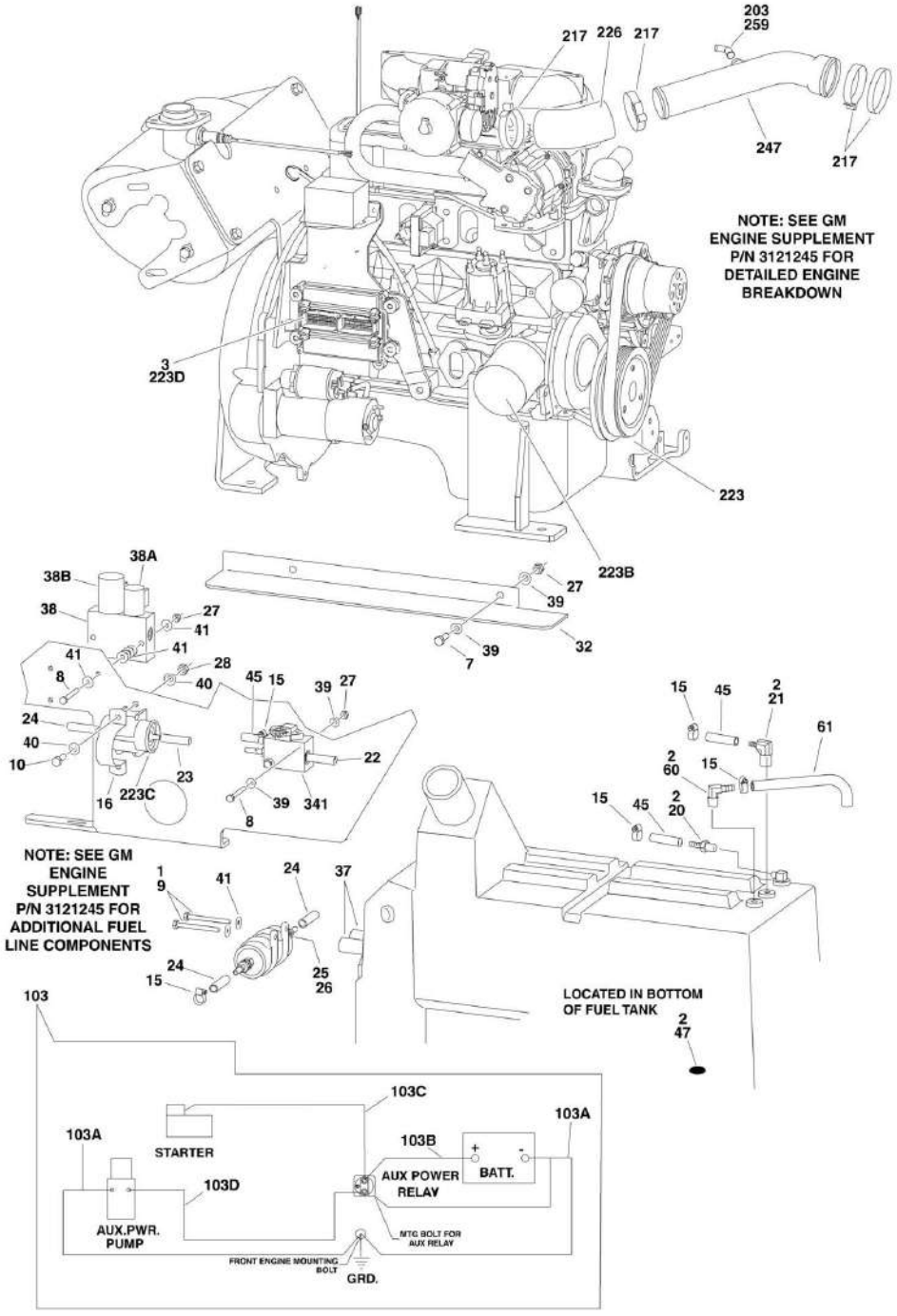
203
259
217
226
217
247
217
NOTE: SEE GM ENGINE SUPPLEMENT P/N 3121245 FOR DETAILED ENGINE BREAKDOWN
3
223D
223
223B
38A
38B
38
27
41
41
41
28
40
8
45
15
39
27
24
40
10
23
22
16
223C
39
341
8
7
39
32
27
39
15
45
2
21
61
2
60
15
15
45
2
20
NOTE: SEE GM ENGINE SUPPLEMENT P/N 3121245 FOR ADDITIONAL FUEL LINE COMPONENTS
1
9
41
24
37
24
15
25
26
LOCATED IN BOTTOM OF FUEL TANK
2
47
103
103C
103A
103A
STARTER
103B
+
-
AUX POWER RELAY
BATT.
103D
AUX.PWR. PUMP
MTG BOLT FOR AUX RELAY
FRONT ENGINE MOUNTING BOLT
GRD.

FIGURE 2-17. USA BUILT MACHINES/GM ENGINE INSTALLATION

ITEM	PART NUMBER	QTY	DESCRIPTION	REV
		Ref	**GM ENGINE INSTALLATION**	
	0275015	Ref	**GM Engine Installation (SN 0300065080 through 0300107511)**	E
	0275870	Ref	**GM Engine Installation (SN 0300107512 through 0300109285)**	B
	1001091602	Ref	**GM Engine Installation (SN 0300109286 through 0300123999)**	E
1	0100011	AR	Compound, Locking	
2	0100020	AR	Sealant, Pipe	
3	0100048	AR	Grease, Dielectric	
4	0181727	1	Angle, Battery Hold Down	
5	0400075	1	Battery (Wet)	
6	0630498	2	Bolt, Battery Hold Down	
7	0641407	2	Bolt 1/4in-20NC x 7/8in	
8	0641418	4	Bolt 1/4in-20NC x 2-1/4in	
9	0641420	2	Bolt 1/4in-20NC x 2-1/2in (Not Shown)	
10	0641508	2	Bolt 5/16in-18NC x 1in	
11	0641610	2	Bolt 3/8in-16NC x 1-1/4in	
12	0642010	1	Bolt 5/8in-11NC x 1-1/4in	
13	0902443	1	Bracket, Hood Latch Mount	
14	0902444	1	Bracket, Hood Support	
15	1320022	5	Clamp, Fuel Line	
16	1320323	1	Clamp	
17	1701542	1	Decal, Gas (Not Shown)	
18	1701543	1	Decal, LPG (Not Shown)	
19	1703876	1	Decal, Engine Tray Swing	
20	2180348	1	Fitting, Barbed	
21	2221176	1	Fitting, Elbow	
22	2720565	1	Hose (78in/2m Length)	
23	2720566	1	Hose (6in/15cm Length)	
24	2720567	1	Hose (48in/122cm Length)	
25	3290405	1	Locknut M4 x 0.7	
26	3290505	1	Locknut M5 x 0.8	
27	3311405	6	Locknut 1/4in-20NC	
28	3311505	2	Locknut 5/16in-18NC	
29	3311605	2	Locknut 3/8in-16NC	
30	3312005	1	Locknut 5/8in-11NC	
31	3340399	1	Pad, Wear	
32	3380694	1	Panel, Shield	
33	3790012	1	O-Ring (Not Shown - Located in Console Box)	
34	3900254	1	Screw, Shoulder	
35	4240099	1	Wire, Tie (Not Shown)	
36	4360336	1	Switch, Toggle (Not Shown - Located in Console Box)	
37	4568114	2	Tube, Spacer	
38		Ref	Valve Options:	
38	4641108	NLA	Valve (Use p/n 1001099391) **(SN 0300065080 through 0300107511)**	
38	4641317	1	Valve **(SN 0300107512 through 0300123999)**	
38A		Ref	Cartridge and Coil Options:	
		Ref	**Note: Original Equipment Valve may have been replaced with Service Replacement Valve. Identify p/n stamped on valve before ordering parts.**	
38A	7012974	1	Cartridge without Coil (4641108 Valve)	

ITEM	PART NUMBER	QTY	DESCRIPTION	REV
38A	7010543	1	Seal Kit - 7012974 Cartridge	
38A	7012941	1	Cartridge without Coil (4641317 & 1001099391 Valves)	
38A	7010543	1	Seal Kit - 7012941 Cartridge	
38A	7012944	1	Coil (4641108 Valve)	
38A	7012944	1	Coil (4641317 & 1001099391 Valves)	
38B		Ref	Cartridge and Coil Options:	
		Ref	**Note: Original Equipment Valve may have been replaced with Service Replacement Valve. Identify p/n stamped on valve before ordering parts.**	
38B	7012995	1	Cartridge without Coil (4641108 & 1001099391 Valves)	
38B	7012518	1	Seal Kit - 7012995 Cartridge	
38B	7012941	1	Cartridge without Coil (4641317 Valve)	
38B	7010543	1	Seal Kit - 7012941 Cartridge	
38B	7012943	1	Coil (4641108 & 1001099391 Valves)	
38B	7012944	1	Coil (4641317 Valve)	
39	4711400	8	Flatwasher 1/4in Thin	
40	4711500	4	Flatwasher 5/16in Thin	
41	4751400	14	Flatwasher 1/4in Regular	
42	4751600	6	Flatwasher 3/8in Regular	
43	4752000	1	Flatwasher 5/8in Regular	
44	4752200	2	Flatwasher 3/4in Regular	
45		Ref	Hose Options:	
45	2720058	7.5 ft /2.3m	Hose **(SN 0300065080 through 0300109285)**	
45	1001091587	7.5 ft /2.3m	Hose **(SN 0300109286 through 0300123999)**	
46		Ref	Decal - Warning Explosion/Fire Options: **(SN 0300092804 through 0300123999)**	
46	1704972	1	ANSI Spec	
46	1706059	1	Brazilian Spec	
46	1706060	1	Chinese Spec	
46	1706064	1	CSA Spec	
46	1706062	1	Japanese Spec	
46	1706061	1	Korean Spec	
46	1706063	1	Spanish Language	
47	2200222	1	Plug, Pipe	
48	2300004	2.7 gal /10.2L	Coolant, Antifreeze (Not Shown)	
60	2220313	1	Fitting, Elbow Barbed Only **(SN 0300065080 through 0300109286)**	
61	2750532	7 ft/2.13m	Hose Only **(SN 0300065080 through 0300109286)**	
		Ref	**GM ENGINE AND PUMP SUB-ASSEMBLY**	
	2000357	Ref	**GM Engine and Pump Sub-Assembly (SN 0300065080 through 0300109285)**	C
	1001091601	Ref	**GM Engine and Pump Sub-Assembly (SN 0300109286 through 0300123999)**	B
101	0100011	AR	Compound, Locking	
102	0641812	2	Bolt 1/2in-13NC x 1-1/2in	
103	2902510	1	Battery Cable Kit	D
103A	7016840	1	Cable (Battery - to Ground)	
103B	7016839	1	Cable (Battery + to Auxiliary Relay)	
103C	7027014	1	Cable (Auxiliary Relay to Starter)	
103D	7016841	1	Cable (Auxiliary Relay to Auxiliary Pump)	

ITEM	PART NUMBER	QTY	DESCRIPTION	REV
104	3600407	1	Pump Assembly (See PISTON PUMP ASSEMBLY (SERIES 42 PUMP) for Breakdown)	
105	3600441	1	Gear Pump Assembly (See GEAR PUMP ASSEMBLY for Breakdown)	
106	3790152	1	O-Ring	
107	3931620	2	Capscrew, Socket Head 3/8in-16NC x 1-1/4in	
108	3960438	2.3 ft/.7m	Seal, Self Gripping	
109	4891600	2	Flatwasher 3/8in Hardened	
		Ref	**GM ENGINE ASSEMBLY**	
	2000355	Ref	**GM Engine Assembly (SN 0300065080 through 0300109285)**	F
	1001091600	Ref	**GM Engine Assembly (SN 0300109286 through 0300123999)**	B
201	0080201		Fitting, Elbow	
202	0100011	AR	Compound, Locking	
203	0100020	AR	Sealant	
204	0340041	2	Band, Mounting	
205	0641406	8	Bolt 1/4in-20NC x 3/4in	
206	0641410	4	Bolt 1/4in-20NC x 1-1/4in	
207	0641506	2	Bolt 5/16in-18NC x 3/4in	
208	0641604	1	Bolt 3/8in-16NC x 1/2in	
209	0641609	4	Bolt 3/8in-16NC x 1-1/8in	
210	0641610	14	Bolt 3/8in-16NC x 1-1/4in	
211	0641612	4	Bolt 3/8in-16NC x 1-1/2in	
212	0641820	4	Bolt 1/2in-13NC x 2-1/2in	
213		Ref	Bolt Options:	
213	0700819	4	Bolt M8 x 55mm **(SN 0300065080 through 0300109285)**	
213	0700810	4	Bolt M8 x 20mm **(SN 0300109286 through 0300123999)**	
214	0741610	2	Screw, Flat Head 3/8in-16NC x 1-1/4in	
215	0962172	1	Bushing, Flanged	
216	1320012	3	Clamp	
217	1320016	5	Clamp	
218	1320022	AR	Clamp	
219	1320223	1	J-Clip	
220	1340060	1	Air Cleaner Assembly	
220	7012664	1	Element, Air Cleaner	
221	1580011	1	Container, Coolant Overflow	
222	1703162	2	Decal - Caution Fan	
223		Ref	Engine, GM 3.0L Options (See GM Engine Supplement P/N 3121245 for Breakdown of Additional Components):	
223	2000354	1	Engine, GM 3.0L **(SN 0300065080 through 0300109285)**	
223	1001091583	1	Engine, GM 3.0L **(SN 0300109286 through 0300123999)**	
223A	7027996	4	Plug, Spark (Not Shown)	
223B	7027965	1	Filter, Oil	
223C	7027972	1	Filter, Fuel	
223D	7027994	1	Module, Control (ECU)	
224	2060025	1	Fan	
225	2720058	4 in/10cm	Hose	
226	2720514	1	Hose	
227	2720563	1	Hose, Radiator (Top)	
228	2720564	1	Hose, Radiator (Bottom)	
229	2750532	8 in/20cm	Hose	
230	3200406	4	Mount, Motor	
231	3311405	12	Locknut 1/4inin-20NC	

ITEM	PART NUMBER	QTY	DESCRIPTION	REV
232	3311505	2	Locknut 5/16in-18NC	
233	3311605	18	Locknut 3/8in-16NC	
234	3311805	1	Locknut 1/2in-13NC	
235	3340399	4	Pad, Wear	
236	3570571	1	Plate, Radiator Mounting	
237	3571008	1	Plate, Air	
238	3571009	1	Plate, Baffle	
239	3571019	1	Plate, Air Panel	
240	3573667	1	Plate, Radiator Support	
241		Ref	Auxiliary Pump Assembly Options (See AUXILIARY PUMP ASSEMBLY for Breakdown):	
241	3600279	NLA	Auxiliary Pump Assembly (Use p/n 3600423) **(SN 0300065080 through 0300106544)**	
241	3600423	1	Auxiliary Pump Assembly **(SN 0300106545 through 0300123999)**	
242	3620040	1	Radiator	
242	8180311	1	Cap, Radiator (was p/n 7019656)	
243	3740067	1	Relay	
244	4070497	4	Shim (11 Gauge)	
245	4070498	2	Shim (16 Gauge)	
246	4340745	1	Tray, Engine	
247	4569342	1	Tube, Air Intake	
248	4569345	1	Pipe, Exhaust	
249	4640952	1	Valve, Oil Drain	
250	4711400	12	Flatwasher 1/4in Thin	
251	4711600	4	Flatwasher 3/8in Thin	
252	4740274	4	Flatwasher, Snubbing	
253	4751400	12	Flatwasher 1/4inin Regular	
254	4751500	4	Flatwasher 5/16in Regular	
255	4751600	29	Flatwasher 3/8in Regular	
256	4751800	4	Flatwasher 1/2in Regular	
257	4791400	2	Starwasher 1/4in	
258	4831900	4	Lockwasher 8mm	
259	2180877	1	Fitting, Elbow	
261	4920385	10 ft/3m	Wire, Safety	
262	1001091794	1	Insulation, Exhaust	

FIGURE 2-18. USA BUILT MACHINES/PERKINS ENGINE INSTALLATION

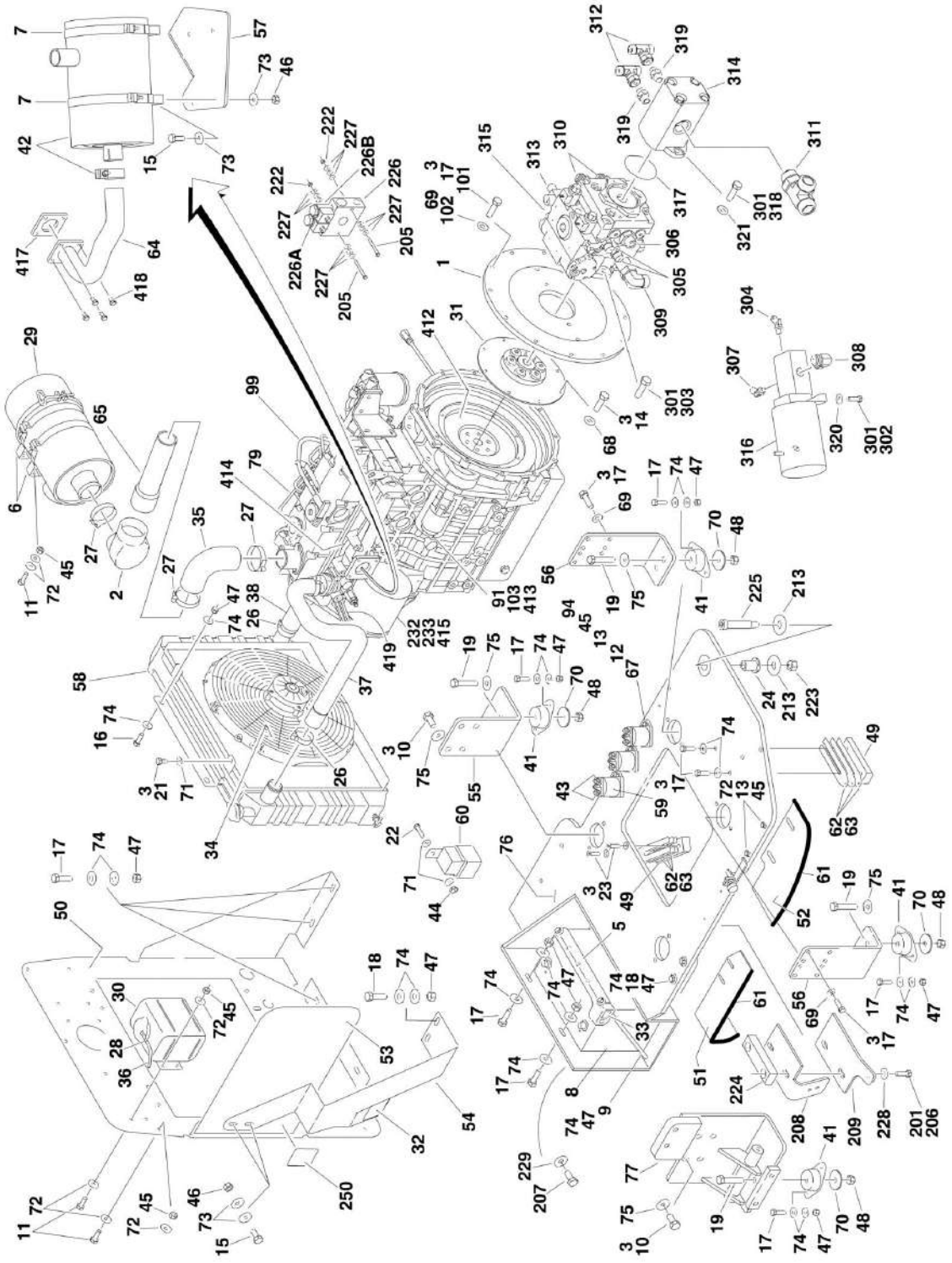

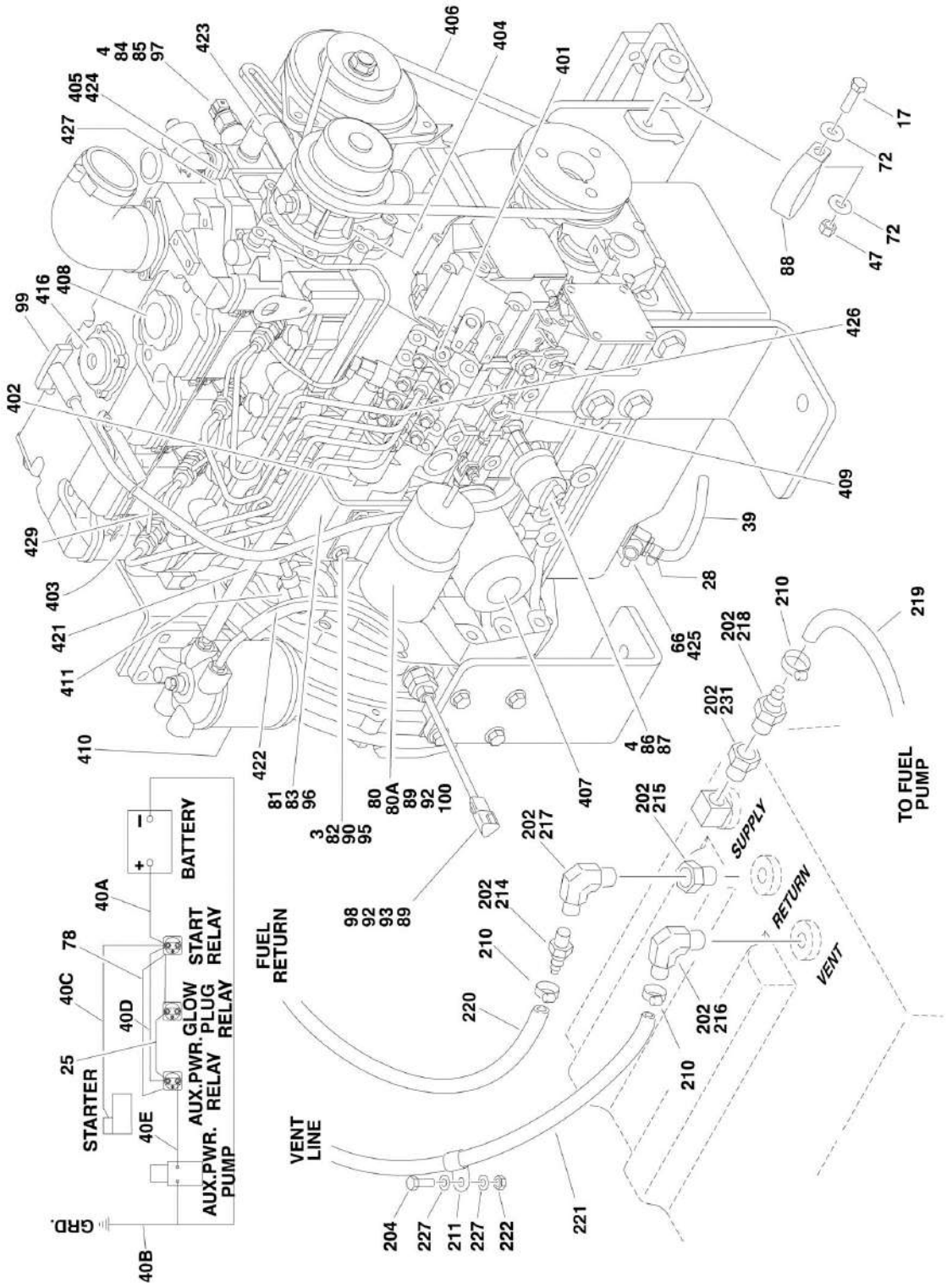
BATTERY
START RELAY
GLOW PLUG RELAY
AUX.PWR. RELAY
AUX.PWR. PUMP
STARTER
GRD.
FUEL RETURN
VENT LINE
SUPPLY
RETURN
VENT
TO FUEL PUMP

FIGURE 2-18. USA BUILT MACHINES/PERKINS ENGINE INSTALLATION

ITEM	PART NUMBER	QTY	DESCRIPTION	REV
		Ref	**PERKINS ENGINE ASSEMBLY**	
	1001095213	Ref	**Without Arctic Package**	E
	1001095221	Ref	**With Arctic Package**	E
1	0080181	1	Adapter, Pump Mounting Plate	
2	0080201	1	Adapter, Elbow Air Intake	
3	0100011	AR	Compound, Locking	
4	0100020	AR	Sealant	
5	0181727	1	Angle, Battery Hold-Down	
6	0340041	2	Band, Air Cleaner Mounting	
7	0340046	2	Band, Muffler Mounting	
8	0400075	1	Battery	
9	0630498	2	Bolt, Battery Hold-Down	
10	0630569	8	Bolt M14 x 30mm	
11	0641406	8	Bolt 1/4in-20NC x 3/4in	
12	0641408	5	Bolt 1/4in-20NC x 1in	
13	0641410	3	Bolt 1/4in-20NC x 1 1/4in	
14	0641506	8	Bolt 5/16in-18NC x 3/4in	
15	0641507	6	Bolt 5/16in-18NC x 7/8in	
16	0641609	4	Bolt 3/8in-16NC x 1 1/8in	
17	0641610	33	Bolt 3/8in-16NC x 1 1/4in	
18	0641611	2	Bolt 3/8in-16NC x 1 3/8in	
19	0641820	4	Bolt 1/2in-13NC x 2 1/2in	
21	0721004	4	Capscrew #10-24NC x 1/2in	
22	0721006	1	Capscrew #10-24NC x 3/4in	
23	0741610	2	Screw, Flat Head 3/8in-16NC x 1-1/4in	
24	0962172	1	Bushing, Flanged	
25	1060904	1	Cable, Jumper	
26	1320012	4	Clamp	
27	1320016	4	Clamp	
28	1320022	3	Clamp	
29	1340060	1	Air Cleaner Assembly	
29	7012664	1	Element, Air Cleaner	
30	1580011	1	Container, Coolant Overflow	
31	1660255	1	Coupling, Pump	
32	1703162	2	Decal - Caution Fan	
33	1703876	1	Decal - Engine Tray Swing	
34	2060032	1	Fan, Electric	
35	2180482	1	Elbow, Rubber	
36	2720058	4 in/10cm	Hose	
37	2720507	NLA	Hose, Radiator (Top) (Use p/n 1001102308)	
38	2720508	1	Hose, Radiator (Bottom)	
39	2750532	6 in/15cm	Hose	
40	2902060	1	Battery Cable Kit	B
40A	7016817	1	Cable - Battery to Starter Relay	
40B	7027041	1	Cable - Battery and Auxiliary Pump to Ground (was p/n 7016837)	
40C	7016834	1	Cable - Starter Relay to Starter	
40D	7016838	1	Cable - Starter Relay to Auxiliary Relay	
40E	7016820	1	Cable - Auxiliary Relay to Auxiliary Pump	
41	3200378	4	Mount, Motor	

ITEM	PART NUMBER	QTY	DESCRIPTION	REV
42		Ref	Muffler Options:	
42	3220113	1	Spark Arresting Muffler	
42	70001017	1	Clamp	
42	3220154	NLA	Catalytic Muffler (Use p/n 1001107116)	
42	70002705	1	Clamp	
42	70002706	1	Plug, Brass	
43	3300220	6	Nut, Washer	
44	3311005	1	Locknut #10-24NC	
45	3311405	16	Locknut 1/4in-20NC	
46	3311505	6	Locknut 5/16in-18NC	
47	3311605	21	Locknut 3/8in-16NC	
48	3311805	4	Locknut 1/2in-13NC	
49	3340399	2	Pad, Wear	
50	3570571	1	Plate, Radiator Mount	
51	3571008	1	Plate, Air	
52	3571009	1	Plate, Baffle	
53	3571019	1	Plate, Air Panel	
54	3573667	1	Plate, Radiator Support	
55	3574253	1	Plate, Engine Mounting (Front)	
56	3574259	2	Plate, Engine Mounting (Rear)	
57	3574264	NLA	Plate, Muffler Support (Use p/n 1001098525)	
58	3620046	1	Radiator	
58	7019656	1	Cap, Radiator	
59	3740067	3	Relay	
60	3740080	1	Relay	
61	3960438	28 in /71cm	Seal, Self Gripping	
62	4070497	4	Shim	
63	4070498	2	Shim	
64	4568743	1	Pipe, Exhaust	
65	4569176	1	Tube, Air Intake	
66	4641272	1	Valve, Oil Drain	
67	4711400	12	Flatwasher, 1/4in Thin	
68	4711500	8	Flatwasher 5/16in Thin	
69	4711600	18	Flatwasher 3/8in Thin	
70	4740274	4	Washer, Snubbing	
71	4751000	6	Flatwasher #10	
72	4751400	20	Flatwasher 1/4in Regular	
73	4751500	12	Flatwasher 5/16in Regular	
74	4751600	44	Flatwasher 3/8in Regular	
75	4751800	11	Flatwasher 1/2in Regular	
76	4846820	1	Weldment, Engine Tray	
77	4846821	1	Mount, Motor/Generator	
78	4922737	1	Harness, Engine Grounding	
79	1001095205	1	Engine, Perkins 404C-22	
80	1001099927	1	Actuator Kit, Governor Pull (Includes 1600351 Actuator and Items 80A, 89, 92 & 100)	
80A	7026843	1	Linkage	
81	3574282	1	Plate, Actuator Mounting	
82	0760612	4	Capscrew M6 x 25mm	
83	0760810	2	Capscrew M8 x 20mm	
84	1001097551	1	Sensor, Coolant	

SECTION 2 - TURNTABLE

ITEM	PART NUMBER	QTY	DESCRIPTION	REV
85	1001097552	1	Adapter, Coolant Sensor	
86	1001097554	1	Sensor, Oil Pressure	
87	1001097555	1	Adapter, Oil Pressure Sensor	
88	1001097588	1	Clip, Tube	
89	2820018	1 ft/31cm	Heat Shrink	
90	3290605	4	Locknut M6	
91	3290801	1	Nut M8	
92	4460464	5	Pin, Male	
93	4460536	1	Connector, Female - 3 Position	
94	4791400	6	Starwasher 1/4in	
95	5240600	8	Flatwasher 6mm Hardened	
96	5240800	2	Flatwasher 8mm Hardened	
97	1001097553	1	Washer, Coolant Sensor	
98	1001099926	1	Sensor Kit, Speed (Includes 1001097556 Speed Sensor and Items 89, 92 & 93)	
99	1001097893	1	Dipstick Assembly	
99	7026885	1	Dipstick	
99	7026886	1	Tube, Dipstick	
99	7026847	2	Washer	
99	7026881	1	O-Ring	
100	4460897	1	Connector, Female - 2 Position	
101	0641612	2	Bolt 3/8in-16NC x 1-3/4in	
102	4891600	2	Flatwasher 3/8in Hardened	
103	4831900	2	Lockwasher M8	
		Ref	**Note: Arctic Package Items 111 thru 115 Not Shown - Used on Arctic Machines Only**	
111	1702941	1	Decal - Battery Heater	
112	1702942	1	Decal - Engine Block Heater	
113	2580024	1	Heater, Battery	
114	2580054	1	Heater, Engine Block	
115	3980007	1	Seat, Battery	
		Ref	**PERKINS ENGINE INSTALLATION**	
	1001095208	Ref	**Without Arctic Package**	D
	1001095217	Ref	**With Arctic Package**	D
201	0100011	AR	Compound, Locking	
202	0100020	AR	Sealant, Pipe	
204	0641406	1	Bolt 1/4in-20NC x 3/4in	
205	0641418	2	Bolt 1/4in-20NC x 2-1/4in	
206	0641610	2	Bolt 3/8in-16NC x 1-1/4in	
207	0642010	1	Bolt 5/8in-11NC x 1-1/4in	
208	0902443	1	Bracket, Hood Latch Mount	
209	0902444	1	Bracket, Hood Support	
210	1320022	5	Clamp, Fuel Line	
211	1320223	1	Clamp	
212	1701505	1	Decal, Diesel (Not Shown)	
213	4752200	2	Flatwasher 3/4in Regular	
214	2180348	1	Fitting, Barbed	
215	2220250	1	Fitting, Reducer	
216	2220313	1	Fitting, Elbow Barbed	
217	2220459	1	Fitting, Elbow	
218	2220794	1	Fitting, Straight Barbed	
219	2720058	8 ft/2.4m	Hose	

ITEM	PART NUMBER	QTY	DESCRIPTION	REV
220	2720271	8 ft/2.4m	Hose	
221	2750532	7 ft/2.1m	Hose	
222	3311405	3	Locknut 1/4in-20NC	
223	3312005	1	Locknut 5/8in-11NC	
224	3340399	1	Pad, Wear	
225	3900254	1	Screw, Shoulder	
226	4641317	1	Valve Assembly	
226A		Ref	Cartridge and Coil Components:	
226A	7012941	1	Cartridge without Coil	
226A	7010543	1	Seal Kit - 7012941 Cartridge	
226A	7012944	1	Coil	
226B		Ref	Cartridge and Coil Components:	
226B	7012941	1	Cartridge without Coil	
226B	7010543	1	Seal Kit - 7012941 Cartridge	
226B	7012944	1	Coil	
227	4751400	14	Flatwasher 1/4in Regular	
228	4751600	2	Flatwasher 3/8in Regular	
229	4752000	1	Flatwasher 5/8in Regular	
230		Ref	Coolant, Anti-Freeze Options (Not Shown):	
230	2300004	2.7 gal /10.2L	Without Arctic Package	
230	2300041	2.7 gal /10.2L	With Arctic Package	
231	2220273	1	Fitting, Reducer	
232	3290501	1	Nut M5	
233	3290601	1	Nut M6	
234	2200222	1	Plug, Pipe (Not Shown - Located on Bottom of Fuel Tank)	
235	0100079	AR	Sealant (Not Shown - Used on Item 234)	
		Ref	**Note: Arctic Package Items 241 thru 246 Not Shown - Used on Arctic Machines Only**	
241	1060626	1	Cord, 3 Way Extension (Located on Left Front of Engine)	
242	1702943	1	Decal - Hydraulic Tank Heater (Located on bottom of Hydraulic Oil Tank)	
243	1702944	1	Decal - Heater Cord (Located on Left Front of Engine)	
243	2580024	1	Heater, Battery (Located on Battery)	
244	2580050	1	Heater, Hydraulic Tank (Located on Bottom of Hyd Oil Tank)	
245	4460488	2	Clamp (Located on Left Front of Engine)	
246	1060625	1	Cord, Immersion Heater (Located on Bottom of Hyd Oil Tank)	
250		Ref	Decal - Warning Explosion/Fire Options:	
250	1704972	1	ANSI Spec	
250	1706059	1	Brazilian Spec	
250	1706060	1	Chinese Spec	
250	1706064	1	CSA Spec	
250	1706062	1	Japanese Spec	
250	1706061	1	Korean Spec	
250	1706063	1	Spanish Language	
		Ref	**PERKINS ENGINE AND PUMP SUB-ASSEMBLY**	
	1001095210	Ref	**Without Arctic Package**	B
	1001095219	Ref	**With Arctic Package**	B
301	0100011	AR	Compound, Locking	
302	0641610	2	Bolt 3/8in-16NC x 1-1/4in	
303	0641812	2	Bolt 1/2in-13NC x 1-1/2in	

ITEM	PART NUMBER	QTY	DESCRIPTION	REV
304	2110604	1	Fitting, Straight	
305	2111010	2	Fitting, Straight	
306	2111612	1	Fitting, Straight	
307	2130604	1	Fitting, Elbow	
308	2131210	1	Fitting, Elbow	
309	2131212	1	Fitting, Elbow	
310	2151212	2	Fitting, Elbow	
311	2170316	1	Fitting, Tee	
312	2170808	2	Fitting, Tee	
313	2221084	1	Fitting, Tee	
314	3600318	1	Gear Pump Assembly (See GEAR PUMP ASSEMBLY for Breakdown)	
315	3600385	1	Pump Assembly (See PISTON PUMP ASSEMBLY (SERIES 42 PUMP) for Breakdown)	
316	3600423	1	Auxiliary Pump Assembly (See Auxiliary Pump Assembly for Breakdown)	
317	3790152	1	O-Ring	
318	3931620	2	Capscrew, Socket Head 3/8in-16NC x 1-1/4in	
319	4641199	2	Valve, Check	
320	4751600	2	Flatwasher 3/8in Regular	
321	4891600	2	Flatwasher 3/8in Hardened	
323		Ref	Oil, Motor Options (Not Shown):	
323	3020016	2.5 gal /9.5L	WITHOUT ARCTIC PACKAGE (MOBIL DELVAC MX 15W-40)	
323	3020044	2.5 gal /9.5L	With Arctic Package (Mobil 0W-40)	
	1001095205	Ref	**ENGINE COMPONENTS**	
401	70001386	1	Pump, Fuel Injection	
401	70001388	AR	Shim, 0.20mm	
401	70001389	AR	Shim, 0.25mm	
401	70001390	AR	Shim, 0.30mm	
401	70001391	AR	Shim, 0.35mm	
401	70001392	AR	Shim, 0.40mm	
401	70001393	AR	Shim, 0.50mm	
401	70001394	AR	Shim, 0.50mm Flat	
402	70001387	1	Solenoid, Fuel Injection	
403	70001395	4	Glowplug	
404	70001396	1	Pump, Water (Includes p/n 70001397 Only)	
404	70001397	1	Gasket, Water Pump to Plate	
404	70001398	1	Gasket, Plate to Engine Block	
405	70001400	1	Thermostat	
405	70001399	1	Gasket, Thermostat Neck to Thermostat Housing	
405	70001401	1	Gasket, Thermostat Housing to Engine Block	
406	70001402	1	Belt	
407	70001403	1	Filter, Oil	
408	70001404	1	Cap, Oil Fill	
408	70001405	1	Seal, Oil Fill Cap	
409	70001406	1	Valve, Relief	
409	70001407	1	Seal, O-Ring	
410	70001408	1	Fuel Bowl and Filter Assembly	
410	70001409	1	Fuel Filter Kit (Includes 1 Filter Element and 4 Seals)	
411	70001410	1	Pump, Lift	

ITEM	PART NUMBER	QTY	DESCRIPTION	REV
411	70001411	1	Seal, O-Ring	
412	70001412	1	Flywheel	
412	70001413	1	Ring, Starter	
413	70001414	1	Starter	
413	70001415	1	Solenoid, Start	
414	70001416	1	Gasket, Exhaust Manifold to Engine Block	
415	70001417	1	Alternator	
416	70001418	1	Valve, Breather	
417	70001419	1	Gasket, Exhaust Manifold to Exhaust Tube	
418	0700808	4	Bolt M8 x 16mm	
419	70001792	1	Lever, Alternator Adjustment Arm	
419	70001793	2	Screw	
419	70001794	1	Washer (Engine Block Side of Lever)	
419	70001796	1	Washer (Alternator Side of Lever)	
420	70002107	1	Fitting, Oil Sensor Adapter to Engine Block	
421	70002109	1	Pipe, Fuel	
422	70002098	1	Hose, Fuel	
423	70002106	1	Hose	
424	70002105	1	Housing, Thermostat	
425	70002108	1	Washer	
426	70002100	1	Pipe, Fuel Injection #1	
426	70002101	1	Pipe, Fuel Injection #2	
426	70002102	1	Pipe, Fuel Injection #3	
426	70002103	1	Pipe, Fuel Injection #4	
427	70002099	1	Gasket, Cover	
428	70002104	1	Pipe, Oil (Not Shown)	
429	70002437	1	Line, Fuel Injection Return (was P/N 70002433)	
430		Ref	Gasket, Cylinder Head Options (Not Shown):	
430	70003034	1	0.4mm	
430	70003033	1	0.5mm	

FIGURE 2-19. BELGIUM BUILT MACHINES/DEUTZ ENGINE INSTALLATION (Prior to SN 1300000979)

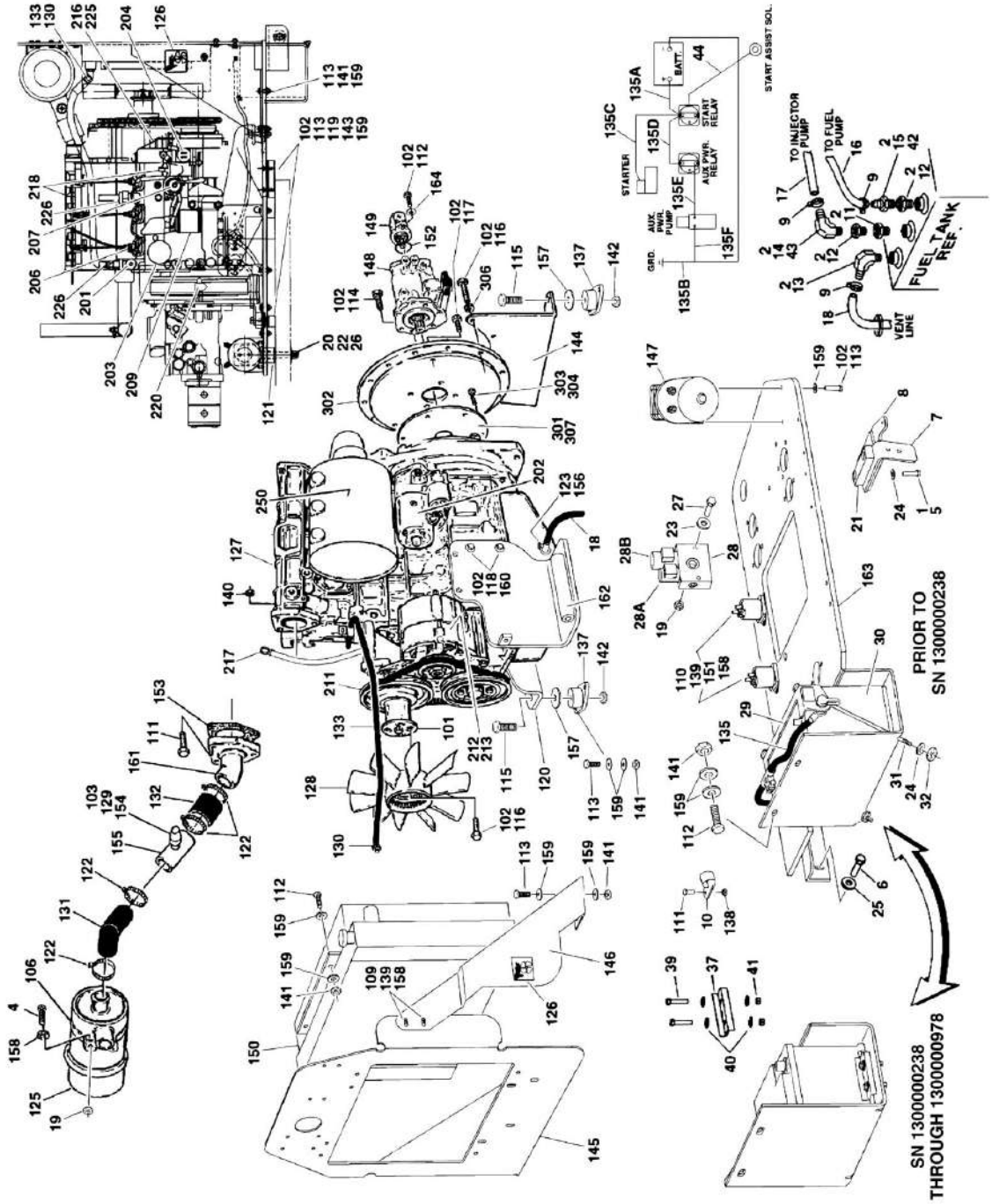

FIGURE 2-19. BELGIUM BUILT MACHINES/DEUTZ ENGINE INSTALLATION (Prior to SN 1300000979)

ITEM	PART NUMBER	QTY	DESCRIPTION	REV
		Ref	**DEUTZ ENGINE INSTALLATION**	
		Ref	**4WD Machines Options:**	
		Ref	**Belgium Built Machines (SN 1st digit is 1)**	
	0272490	Ref	**Installation Engine, Deutz F3M1011F (Prior to SN 1300000353)**	G
	0273754	Ref	**Installation Engine, Deutz F3M2011 TIER II (SN 1300000353 through 1300000978)**	B
1	0100011	AR	Compound, Locking	
2	0100020	AR	Sealant	
4	0641406	1	Bolt 1/4in-20NC x 3/4in **(Prior to SN 1300000178)**	
5	0641610	2	Bolt 3/8in-16NC x 1-1/4in	
6	0642010	1	Bolt 5/8in-11NC x 1-1/4in	
7	0902443	1	Bracket, Hood Latch Mount	
8	0902444	1	Bracket, Hood Support	
9	1320022	5	Clamp, Fuel Line	
10	1320223	1	Clamp, J-Clip 1/2in **(Prior to SN 1300000178)**	
11	2180536	1	Fitting, Straight **(Prior to SN 1300000353)**	
12	2220250	1	Fitting, Reducer **(Prior to SN 1300000353)**	
13	2220313	1	Fitting, Elbow	
14	2220459	1	Fitting, Elbow **(Prior to SN 1300000353)**	
15	2220794	1	Fitting, Straight **(Prior to SN 1300000353)**	
16	2720058	15.1 ft /4.6m	Hose	
17	2720271	12 ft /3.66m	Hose	
18	2750532	7 ft/2.14m	Hose	
19	3311405	2	Locknut 1/4in-20NC	
20	3312005	1	Locknut 5/8in-11NC	
21	3340958	1	Pad, Wear	
22	3900254	1	Bolt, Shoulder	
23	4751400	12	Flatwasher 1/4in Regular	
24	4751600	6	Flatwasher 3/8in Regular	
25	4752000	1	Flatwasher 5/8in Regular	
26	4752200	2	Flatwasher 3/4in Regular	
27	0641418	2	Bolt 1/4in-20NC x 2-1/4in	
28	4641108	NLA	Valve, Dual Select (Use p/n 1001099391)	
		Ref	**Note: Original Equipment Valve may have been replaced with Service Replacement Valve. Identify p/n stamped on valve before ordering parts.**	
28A	7012974	1	Cartridge without Coil (4641108 Valve)	
28A	7010543	1	Seal Kit - 7012974 Cartridge	
28A	7012941	1	Cartridge without Coil (1001099391 Valve	
	7010543	1	Seal Kit - 7012974 Cartridge	
28A	7012944	1	Coil	
28B	7012995	1	Cartridge without Coil	
28B	7012518	1	Seal Kit - 7012995 Cartridge	
28B	7012943	1	Coil	
29	0181727	1	Angle, Battery Tie-Down **(Prior to SN 1300000238)**	
30		Ref	Battery (Wet) options:	
30	0400075	NLA	Battery (Wet) (Use p/n 8008750) **(Prior to SN 1300000238)**	
30	8008750	1	Battery 60038 **(SN 1300000238 through 1300000978)**	

ITEM	PART NUMBER	QTY	DESCRIPTION	REV
31	0630498	2	Bolt, Battery Tie-Down **(Prior to SN 1300000238)**	
32	3311605	2	Locknut 3/8in-16NC **(Prior to SN 1300000238)**	
33	2200222	1	Fitting, Pipe Plug (Not Shown)	
34	2220273	1	Fitting, Reducer (Not Shown) **(Prior to SN 1300000353)**	
35	4240099	1	Tie, Wire (Not Shown)	
36	1701505	1	Decal, Diesel Fuel (Not Shown)	
37	1787217	1	Clamp, Battery Hold	
39	0641512	2	Bolt, 5/16in-20NC x 1-1/2in	
40	4751500	4	Washer, 5/16in (Regular)	
41	3311505	2	Locknut, 5/16in-18NC	
42	2180348	1	Fitting, Barb **(SN 1300000353 through 1300000978)**	
43	2221176	1	Fitting, Elbow **(SN 1300000353 through 1300000978)**	
44	4922978	1	Harness, Start Assist Solenoid **(SN 1300000353 through 1300000978)**	
		Ref	**DEUTZ ENGINE ASSEMBLY OPTIONS:**	
	0272489	Ref	**Assembly Engine F3M1011F (Prior to SN 1300000353)**	E
	2000228	Ref	**Assembly Engine F3M1011F Tier II (SN 1300000353 through 1300000978)**	C
101	0080231	1	Adapter, Fan Spacer	
102	0100011	AR	Compound, Locking	
103	0100020	AR	Sealant	
106	0340041	2	Band, Muffler Bracket	
109	0641406	6	Bolt 1/4in-20NC x 3/4in	
110	0641410	4	Bolt 1/4in-20NC x 1-1/4in	
111	0641510	3	Bolt 5/16in-18NC x 1-1/4in	
112	0641608	9	Bolt 3/8in-16NC x 1in	
113	0641610	16	Bolt 3/8in-16NC x 1-1/4in	
114	0641812	2	Bolt 1/2in-13NC x 1-1/2in	
115	0641820	4	Bolt 1/2in-13NC x 2-1/2in	
116	0700816	4	Bolt M8 x 40mm	
117	0701012	8	Bolt M10 x 25mm	
118	0711414	6	Bolt M14 x 30mm	
119	0741610	2	Screw, Flathead 3/8in-16NC x 1-1/4in	
120	0902740	1	Bracket, Front Engine Mounting (Right Side)	
121	0962172	1	Bushing, Flanged	
122	1320016	4	Clamp, Hose	
123	1320022	1	Clamp, Hose	
124	1320223	3	Clamp, J-Clip 1/2in	
125	1340060	1	Air Cleaner Assembly	
125	7012664	1	Element, Air Cleaner	
126	1703162	2	Decal, Fan Blade	
127		Ref	Engine, Deutz Options:	
127	2000190	1	Engine, Deutz F3M1011F **(Prior to SN 1300000353)**	
127	2000217	1	Engine, Deutz **(SN 1300000353 through 1300000978)**	
128	2060025	1	Fan, Suction	
129	2180798	1	Fitting, Restriction Indicator	
130	2220451	2	Fitting, Straight	
131	2720434	1	Hose, Elbow	
132	2720449	1	Hose	
133	2720467	2	Hose	
134	2750532	1.2 ft /0.4m	Hose	

ITEM	PART NUMBER	QTY	DESCRIPTION	REV
135	2902060	1	Cable Kit - Battery	B
135A	7016817	1	Cable - Battery to Starter Relay	
135B	7027041	1	Cable - Battery and Auxiliary Pump to Ground (was p/n 7016837)	
135C	7016834	1	Cable - Starter Relay to Starter	
135D	7016838	1	Cable - Starter Relay to Auxiliary Relay	
135E	7016820	1	Cable - Auxiliary Relay to Auxiliary Pump	
137		Ref	Mount, Engine Options:	
137	3200378	4	Mount Engine **(Prior to SN 1300000353)**	
137	3200406	4	Mount Engine **(SN 1300000353 through 1300000978)**	
138	3311401	1	Nut 1/4in-20NC	
139	3311405	10	Locknut 1/4in-20NC	
140	3311505	3	Locknut 5/16in-20NC	
141	3311605	19	Locknut 3/8in-16NC	
142	3311805	4	Locknut 1/2in-13NC	
143	3340958	2	Pad, Wear	
144	3570801	1	Plate, Engine Mounting	
145	3573895	1	Plate, Radiator Mount	
146	3573937	1	Plate, Radiator Support	
147	3600279	1	Auxiliary Pump Assembly (See AUXILIARY PUMP ASSEMBLY For Breakdown)	
148		Ref	Piston Pump Assembly Options (See PISTON PUMP ASSEMBLY (SERIES 42 PUMP) for Breakdown):	
148	3600296	NLA	Piston Pump Assembly (Use p/n 3600385) **(Prior to SN 1300000129)**	
148	3600385	1	Pump 42 Series, Overcontrol Piston **(SN 1300000129 through 1300000978)**	
149	3600318	1	Gear Pump Assembly (See GEAR PUMP ASSEMBLY for Breakdown)	
149	7023929	1	Seal Kit - 3600318 Pump	
150	3620033	NLA	Radiator (Use p/n 1001150998)	
151	3740140	2	Relay, Power	
152	3790152	1	O-Ring	
153	3960407	1	Gasket, Air Intake Adapter	
154	4360392	1	Switch, Restriction Indicator	
155	4567495	1	Tube, Tee	
156	4640751	1	Valve, Oil Drain	
157	4740274	4	Washer, Snubbing	
158	4751400	17	Flatwasher 1/4in Regular	
159	4751600	40	Flatwasher 3/8in Regular	
160	4751900	6	Flatwasher 9/16in Regular	
161	4845395	1	Air Intake Adapter Weldment	
162		Ref	Bracket, Motor Mount Options:	
162	4846567	1	Machines with Generator	
	4846567	1	Machines with Generator (Standard)	
162	1001138135	1	Machines without Generator (Optional Service Replacement - No Generator Mounting Capabilities) (Not Shown)	
163	4846683	1	Engine Tray Weldment	
164	4891600	2	Flatwasher 3/8in Hardened	
		Ref	**ENGINE COMPONENTS OPTIONS:**	
	2000190	Ref	**Engine, Deutz F3M1011F (Prior to SN 1300000353)**	
	2000217	Ref	**Engine, Deutz (F3M2011 Tier II) (SN 1300000353 through 1300000978)**	

ITEM	PART NUMBER	QTY	DESCRIPTION	REV
201	7020461	1	Switch, Oil Pressure	
202	7020479	1	Starter	
202	7026608	1	Relay, Starter	
203	7016331	1	Filter, Oil - Spin-on	
203	7027236	1	Sensor, Oil Temperature (Not Shown - Located in Rear Of Filter Mount)	
204		Ref	Pump, Oil Options:	
204	7020467	1	Pump, Oil **(Prior to SN 1300000353)**	
204	7020495	1	Pump, Oil Lube (Not Shown) **(SN 1300000353 through 1300000978)**	
205	7020468	1	Ring, Sealing	
206		Ref	Pump, Fuel Injection Options:	
206	7024318	1	Pump, Fuel Injection **(Prior to SN 1300000353)**	
206	7027242	1	Pump, Fuel Injection (not shown) **(SN 1300000353 through 1300000978)**	
206	7027246	1	Series A Injector	
206	7027608	1	Series B Injector	
206	7027609	1	Series C Injector	
206	7027610	1	Series D Injector	
206	7020447	3	Gasket, Injection Pump	
207		Ref	Pump, Fuel Supply Options:	
207	7020463	1	Pump, Fuel Supply (was p/n 7024413) **(Prior to SN 1300000353)**	
207	70000916	1	Pump, Fuel Supply (was p/n 7027238) (Not Shown) **(SN 1300000353 through 1300000978)**	
208	7020411	1	O-Seal	
209	7020023	1	Filter, Fuel Options	
209	70001423	1	Bracket, Fuel Filter **(SN 1300000353 through 1300000978)**	
210	7020471	3	Gasket, Exhaust (Not Shown)	
210	7020449	3	Gasket, Intake (Not Shown)	
211	7020408	1	V-Belt	
212	7000663	1	Alternator (was p/n 7020410)	
212	70002234	1	Bracket, Adjusting	
213	7020464	1	Voltage Regulator	
214		Ref	Transmitter, Temperature Options (Not Shown - Located on Front Left of Engine):	
214	7020168	1	Transmitter, Temperature **(Prior to SN 1300000353)**	
214	7027241	1	Transmitter, Temperature **(SN 1300000353 through 1300000978)**	
215	7020480	1	Ring, Sealing (Not Shown)	
216	7020458	1	Actuator, Throttle	
216	7027276	2	Spring, Actuator	
217	7020026	1	Dipstick	
217	7020403	1	Seal, Ring	
217		Ref	Tube, Dipstick Options:	
217	70001002	1	Tube for p/n 2000217	
217	See Note	1	Tube for p/n 2000190 (Note: For correct component, must supply engine serial number to JLG Parts Department)	
218	7020465	1	Cap, Filler	
219	7020488	2	Connector, Electrical (Not Shown - Located at Sensors)	
220	7024565	1	Sensor, Tach (was p/n 7020481)	
220	70003932	1	Spacer, Sleeve	
221	7020482	1	Gasket Kit (Not Shown)	

ITEM	PART NUMBER	QTY	DESCRIPTION	REV
223	7020459	1	Thermostat (Not Shown) **(SN 1300000353 through 1300000978)**	
223	7020460	1	Spring, Compression	
224	See Note	1	Flywheel (Not Shown) **(SN 1300000353 through 1300000978)**	
		Ref	**(Note: Not available for purchase)**	
224	7024579	1	Rim, Gear (Not Shown)	
225	7027239	1	Solenoid, Start **(SN 1300000353 through 1300000978)**	
226	7027769	2	Connector, Radiator **(SN 1300000353 through 1300000978)**	
227	7027245	1	Fuel Filter In-Line (Not Shown)	
		Ref	**MUFFLER INSTALLATION OPTIONS:**	
250		Ref	Muffler Options:	
250	3220110	1	Standard	
250	3220112	1	Catalytic	
250A	1320176	1	Clamp, Muffler	
	0256847	Ref	**PUMP COUPLING INSTALLATION**	2
301	1660234	1	Coupling, Hayes	
302	0080163	1	Plate, Pump Adapter	
303	0700810	6	Bolt M8 x 20mm	
304	4831900	6	Lockwasher M8	
306	4832000	8	Lockwasher M10	
307	3020021	AR	Grease, Coupling (Not Shown)	

FIGURE 2-20. BELGIUM BUILT MACHINES/DEUTZ ENGINE INSTALLATION (SN 1300000979 through 1300006000)

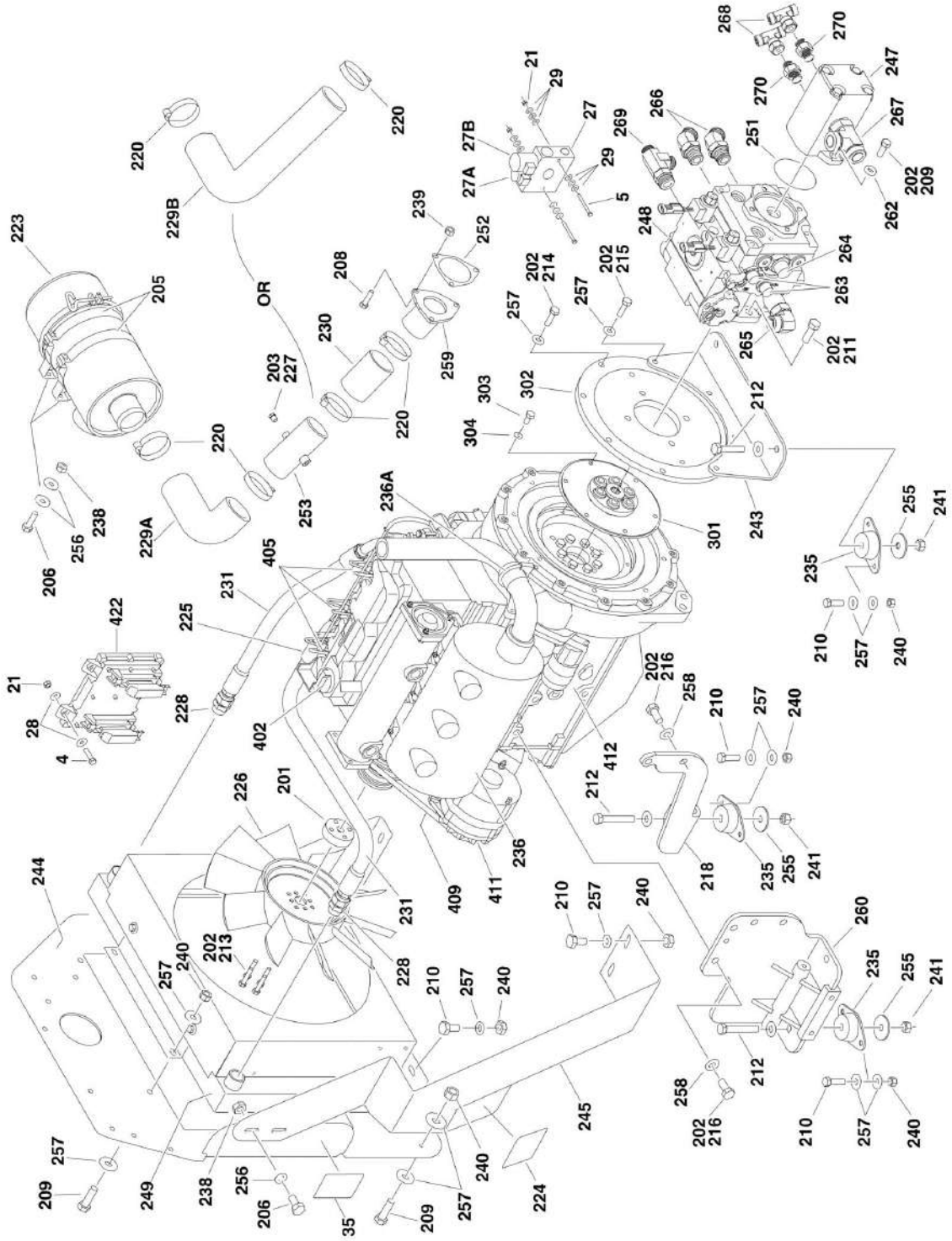

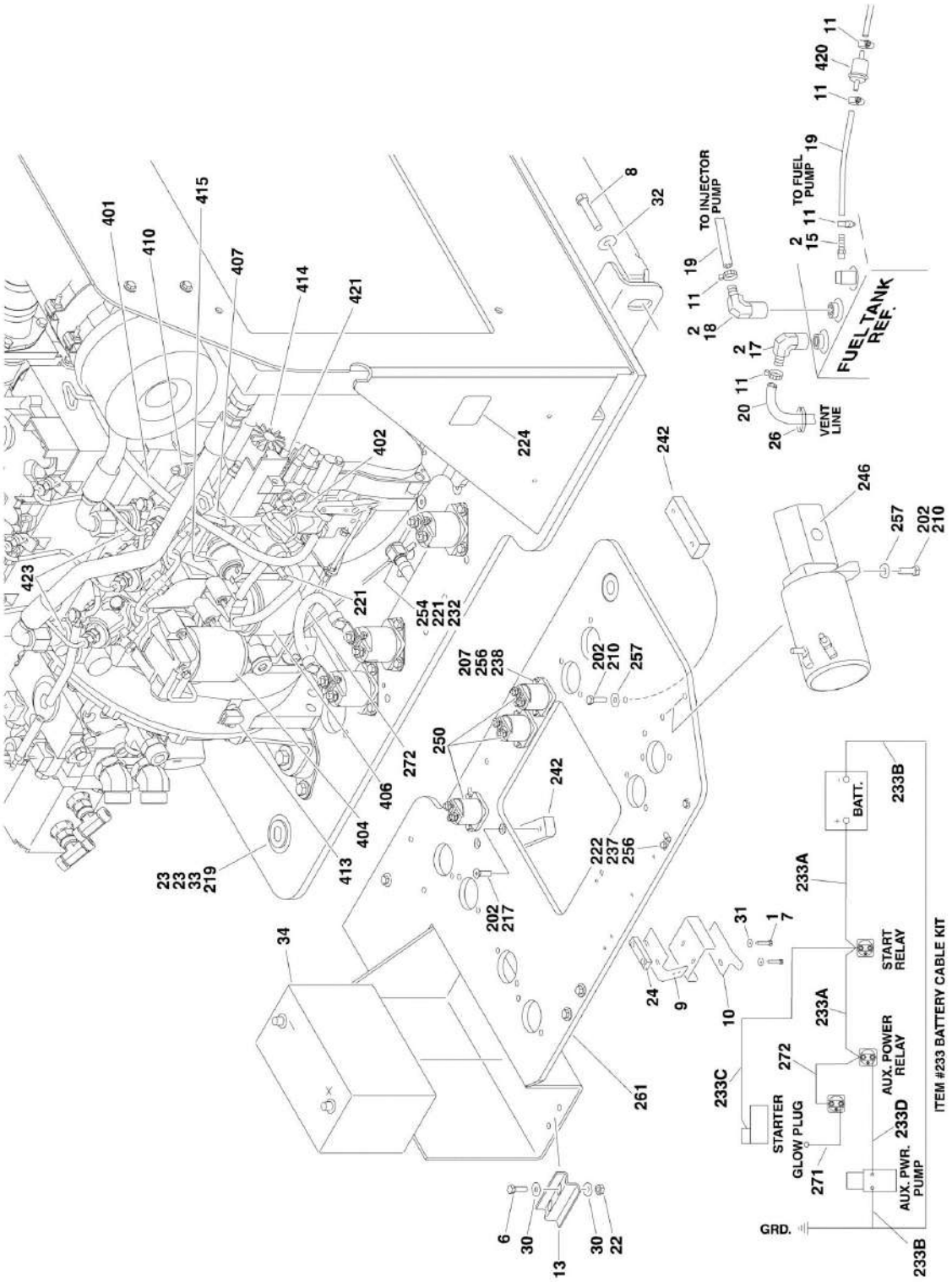
TO INJECTOR PUMP
TO FUEL PUMP
FUEL TANK REF.
VENT LINE
BATT.
START RELAY
AUX. POWER RELAY
STARTER
GLOW PLUG
AUX. PWR. PUMP
GRD.
ITEM #233 BATTERY CABLE KIT

FIGURE 2-20. BELGIUM BUILT MACHINES/DEUTZ ENGINE INSTALLATION (SN 1300000979 through 1300006000)

ITEM	PART NUMBER	QTY	DESCRIPTION	REV
		Ref	**DEUTZ ENGINE INSTALLATIONS (BELGIUM BUILT MACHINES) (SN 1ST DIGIT IS 1)**	
	0274335	Ref	**Deutz Engine Installation (4WD) (SN 1300000979 through 1300003221)**	D
	0275871	Ref	**Deutz Engine Installation (4WD) (SN 1300003222 through 1300006000)**	B
1	0100011	AR	Compound, Locking	
2	0100020	AR	Sealant, Pipe	
4	0641410	4	Bolt 1/4in-20NC x 1-1/4in	
5	0641418	2	Bolt 1/4in-20NC x 2-1/4in	
6	0641512	2	Bolt 5/16in-18NC x 1-1/2in	
7	0641610	2	Bolt 3/8in-16NC x 1-1/4in	
8	0642010	1	Bolt 5/8in-11NC x 1-1/4in	
9	0902443	1	Bracket, Hood Latch Mount	
10	0902444	1	Bracket, Hood Support	
11	1320022	5	Clamp, Fuel Line	
12	1701505	1	Decal, Diesel Fuel (Not Shown)	
13	1787217	1	Clamp, Battery Hold-Down	
15	2180348	1	Fitting, Barbed	
16	2200222	1	Plug, Pipe (Not Shown - Located on Bottom of Fuel Tank)	
17	2220313	1	Fitting, Elbow Barbed	
18	2221176	1	Fitting, Elbow	
19	2720058	15.1 ft /4.6m	Hose	
20	2750532	6 ft/1.83m	Hose	
21	3311405	6	Locknut 1/4in-20NC	
22	3311505	2	Locknut 5/16in-18NC	
23	3312005	1	Locknut 5/8in-11NC	
24		Ref	Pad, Wear Options:	
24	3340399	1	Pad, Wear **(SN 1300000979 through 1300003221)**	
24	3340958	1	Pad, Wear **(SN 1300003222 through 1300006000)**	
25	3900254	1	Screw, Shoulder	
26	4240099	AR	Wire, Tie	
27		Ref	Valve Options:	
27	4641108	NLA	Valve (Use p/n 1001099391) **(SN 1300000979 through 1300003221)**	
27	4641317	1	Valve **(SN 1300003222 through 1300006000)**	
27A		Ref	Cartridge and Coil Options:	
		Ref	**Note: Original Equipment Valve may have been replaced with Service Replacement Valve. Identify p/n stamped on valve before ordering parts.**	
27A	7012974	1	Cartridge without Coil (4641108 Valve)	
27A	7010543	1	Seal Kit - 7012974 Cartridge	
27A	7012941	1	Cartridge without Coil (4641317 & 1001099391 Valves)	
27A	7010543	1	Seal Kit - 7012974 Cartridge	
27A	7012944	1	Coil	
27B		Ref	Cartridge and Coil Options:	
		Ref	**Note: Original Equipment Valve may have been replaced with Service Replacement Valve. Identify p/n stamped on valve before ordering parts.**	
27B	7012995	1	Cartridge without Coil (4641108 & 1001099391 Valves)	

ITEM	PART NUMBER	QTY	DESCRIPTION	REV
27B	7012518	1	Seal Kit - 7012995 Cartridge	
27B	7012941	1	Cartridge without Coil (4641317 Valve)	
27B	7010543	1	Seal Kit - 7012941 Cartridge	
27B	7012943	1	Coil (4641108 & 1001099391 Valves)	
27B	7012944	1	Coil (4641317 Valve)	
28	4711400	8	Flatwasher 1/4in Thin	
29	4751400	12	Flatwasher 1/4in Regular	
30	4751500	4	Flatwasher 5/16in Regular	
31	4751600	6	Flatwasher 3/8in Regular	
32	4752000	1	Flatwasher 5/8in Regular	
33	4752200	2	Flatwasher 3/4in Regular	
34	8008750	1	Battery (Wet)	
35	1706098	1	Decal - Warning Explosion/Fire **(SN 1300001787 through 1300006000)**	
		Ref	**ENGINE ASSEMBLY**	
	2000291	Ref	**Engine Assembly (4WD) (SN 1300000979 through 1300006000)**	J
201	0080231	1	Adapter, Fan Spacer	
202	0100011	AR	Compound, Locking	
203	0100020	AR	Sealant, Pipe Only **(SN 1300000979 through 1300003196)**	
205	0340041	2	Band, Muffler Bracket	
206	0641406	6	Bolt 1/4in-20NC x 3/4in	
207	0641410	6	Bolt, 1/4in-20NC x 1 1/4in	
208	0641510	3	Bolt, 5/16in-18NC x 1 1/4in	
209	0641608	AR	Bolt 3/8in-16NC x 1in	
210	0641610	16	Bolt 3/8in-16NC x 1 1/4in	
211	0641812	2	Bolt 1/2in-13NC x 1 1/2in	
212	0641820	4	Bolt 1/2in-13NC x 2 1/2in	
213	0700816	4	Bolt M8 x 40mm	
214		Ref	Bolt M10 x 25mm Options:	
214	0701012	4	Bolt M10 x 25mm **(SN 1300000979 through 1300001786)**	
214	0771012	4	Bolt M10 x 25mm **(SN 1300001787 through 1300006000)**	
215		Ref	Bolt M10 x 30mm Options:	
215	0701014	4	Bolt M10 x 30mm **(SN 1300000979 through 1300001786)**	
215	0711014	4	Bolt M10 x 30mm **(SN 1300001787 through 1300006000)**	
216	0711414	6	Bolt M14 x 30mm	
217	0741610	2	Screw, Countersunk 3/8in-16NC x 1-1/4in	
218	0902740	1	Bracket, Engine Mounting	
219	0962172	1	Bushing, Flanged	
220	1320016	AR	Clamp	
221	1320022	1	Clamp, Hose	
222	1320222	3	Clamp, "J" Clip	
223	1340060	1	Air Cleaner Assembly	
223	7012664	1	Element, Air Cleaner	
224	1703162	2	Decal, Fan Blade	
225		Ref	Engine, Deutz Options:	
225	2000273	1	Engine, Deutz (F3M2011 Tier II) **(SN 1300000979 through 1300001786)**	
225	2000338	1	Engine, Deutz (F3M2011 Tier II) **(SN 1300001787 through 1300003195)**	
225	1001092723	1	Engine, Deutz (D2011L03 Tier III) **(SN 1300003196 through 1300006000)**	
226	2060025	1	Fan	

ITEM	PART NUMBER	QTY	DESCRIPTION	REV
227	2200221	1	Plug Only **(SN 1300000979 through 1300003195)**	
228	2220451	1	Fitting	
229		Ref	Hose, Elbow Options:	
229A	2720434	1	Hose, Elbow **(SN 1300000979 through 1300003195)**	
229B	1001091179	1	Hose, Elbow **(SN 1300003196 through 1300006000)**	
230	2720449	1	Hose, Air Cleaner Intake Only **(SN 1300000979 through 1300003195)**	
231	2720467	2	Hose, Oil Cooler	
232	2750532	1.4 ft /0.4m	Hose	
233	2902060	1	Battery Cable Kit	B
233A	7027041	1	Cable (Battery - to Ground) (was p/n 7016837)	
233B	7016817	1	Cable (Battery + to Auxiliary Relay)	
233C	7016820	1	Cable (Auxiliary Relay to Starter)	
233D	7016834	1	Cable (Auxiliary Relay to Auxiliary Pump)	
234	3020016	2.5 gal /9.5L	Motor Oil Mobil Delvac MX 15W-40 (Not Shown)	
235	3200406	4	Mount, Rubber	
236	3220110	1	Muffler, Deutz Spark Arresting	
236A	1320176	1	Clamp, Muffler	
237	3311401	1	Nut 1/4in-20NC	
238	3311405	12	Locknut 1/4in-20NC	
239	3311505	3	Locknut 5/16in-18NC	
240	3311605	AR	Locknut 3/8in-16NC	
241	3311805	4	Locknut 1/2in-13NC	
242	3340399	2	Pad, Wear	
243	3570801	NLA	Plate, Engine Mounting (Use p/n 0903063)	
244	3573895	1	Plate, Radiator Mounting	
245	3573937	1	Support, Radiator	
246		Ref	Auxiliary Pump Assembly Options (See AUXILIARY PUMP ASSEMBLY for Breakdown):	
246	3600279	NLA	Auxiliary Pump Assembly (Use p/n 3600423) **(SN 1300000979 through 1300002752)**	
246	3600423	1	Auxiliary Pump Assembly **(SN 1300002753 through 1300006000)**	
247	3600318	1	Gear Pump Assembly (See GEAR PUMP ASSEMBLY for Breakdown)	
247	7023929	1	Seal Kit - 3600318 Pump	
248	3600385	1	Piston Pump Assembly with Fittings (See PISTON PUMP ASSEMBLY (SERIES 42 PUMP) for Breakdown)	
249	3620033	NLA	Radiator (Use p/n 1001150998)	
250		Ref	Relay Options:	
250	3740140	2	Relay **(SN 1300000979 through 1300001979)**	
250	3740067	3	Relay **(SN 1300001980 through 1300006000)**	
251	3790152	1	O-Ring	
252	3960407	1	Gasket, Air Intake	
253	4567495	1	Tube, Tee Only **(SN 1300000979 through 1300003195)**	
254	4640751	1	Valve, Oil Drain	
255	4740274	4	Washer, Snubbing	
256	4751400	21	Flatwasher 1/4in Regular	
257	4751600	AR	Flatwasher 3/8in Regular	
258		Ref	Flatwasher Options:	
258	4751900	6	Flatwasher 9/16in Regular **(SN 1300000979 through**	

ITEM	PART NUMBER	QTY	DESCRIPTION	REV
			1300001786)	
258	4812200	6	Flatwasher M14 **(SN 1300001787 through 1300006000)**	
259	4845395	1	Adapter	
260		Ref	Bracket, Motor Mount Options:	
260	4846567	1	Machines with Generator	
260	4846567	1	Machines without Generator (Standard)	
260	1001138135	1	Machines without Generator (Optional Service Replacement - No Generator Mounting Capabilities) (Not Shown)	
261	4846683	1	Tray, Engine Mounting	
262	4891600	2	Flatwasher 3/8in Hardened	
263	2111010	2	Fitting, Straight **(SN 1300001787 through 1300006000)**	
264	2111612	1	Fitting, Straight **(SN 1300001787 through 1300006000)**	
265	2131212	1	Fitting, Elbow **(SN 1300001787 through 1300006000)**	
266	2151212	2	Fitting, Elbow **(SN 1300001787 through 1300006000)**	
267	2170316	1	Fitting, Tee **(SN 1300001787 through 1300006000)**	
268	2170808	2	Fitting, Tee **(SN 1300001787 through 1300006000)**	
269	2221084	1	Fitting, Tee **(SN 1300001787 through 1300006000)**	
270	4641199	2	Valve, Check **(SN 1300001787 through 1300006000)**	
271	4923451	1	Harness, Glow Plug (Not Shown) **(SN 1300001787 through 1300006000)**	
272	1060904	1	Cable, Jumper Only **(SN 1300001981 through 1300006000)**	
	0256847	Ref	**PUMP COUPLING INSTALLATION**	2
301	1660234	1	Coupling, Hayes	
302	0080163	1	Plate, Pump Adapter	
303	0700810	63	Bolt M8 x 20mm	
304	4831900	6	Lockwasher M8	
307	3020021	AR	Grease, Coupling (Not Shown)	
		Ref	**ENGINE COMPONENTS**	
	2000273	Ref	**Engine Component (SN 1300000979 through 1300001786)**	
	2000338	Ref	**Engine Component (SN 1300001787 through 1300003195)**	
	1001092723	Ref	**Engine Component (SN 1300003196 through 1300006000)**	
401	7020026	1	Dipstick (was p/n 7027244)	
402	7020465	2	Cap, Filler	
403	7020495	1	Pump, Oil Lube (Not Shown)	
403	7020468	1	Seal Between Oil Pump and Engine Block (Not Shown)	
404	7016331	1	Filter, Oil	
404	7027236	1	Sensor, Oil Temperature (Not Shown - Located in Rear Of Filter Mount)	
405		Ref	Pump, Injector Options:	
405	7027246	3	Series A Injector	
405	7027608	3	Series B Injector	
405	7027609	3	Series C Injector	
405	7027610	3	Series D Injector	
405	7020447	3	Gasket, Injector Pump	
406	7020023	1	Filter, Fuel	
406	70001423	1	Bracket, Fuel Filter	
407	70000916	1	Pump Fuel Supply (was p/n 7027238)	
407	7020411	1	O-Seal Between Fuel Pump and Engine Block (Not Shown)	
407	70001435	1	Replacement Filter	
408	7020449	3	Gasket, Intake Manifold (Not Shown)	
408	7020471	3	Gasket, Exhaust (Not Shown)	
409	7020408	1	V-Belt	

SECTION 2 - TURNTABLE

ITEM	PART NUMBER	QTY	DESCRIPTION	REV
410	7027791	1	Sensor, Temperature	
411	7000663	1	Alternator (was p/n 7020410)	
411	7020464		Regulator, Voltage (Not Shown)	
412	7020479	1	Starter	
412	7026608	1	Relay, Starter	
413	7024565	1	Tacho-Generator	
413	70003932	1	Spacer, Sleeve	
414	7027792	1	Actuator, Throttle	
414	7027276	2	Spring, Actuator	
415	7027790	1	Sensor, Oil Pressure	
418	7020459	1	Thermostat	
418	7020460	1	Spring, Compression	
419	See Note	1	Flywheel (Not Shown) (Note: Not available for purchase)	
419	7024579	1	Rim, Gear (Not Shown)	
420	7027245	1	Filter, Fuel	
421	7027239	1	Solenoid, Start	
422	7027795	1	Module, EMR2	
423	7027769	2	Connector, Radiator	
424	70001181	1	Valve (Not Shown - Located Behind Oil Filter) (2000338 Engine)	

FIGURE 2-21. BELGIUM BUILT MACHINES/PERKINS ENGINE INSTALLATION

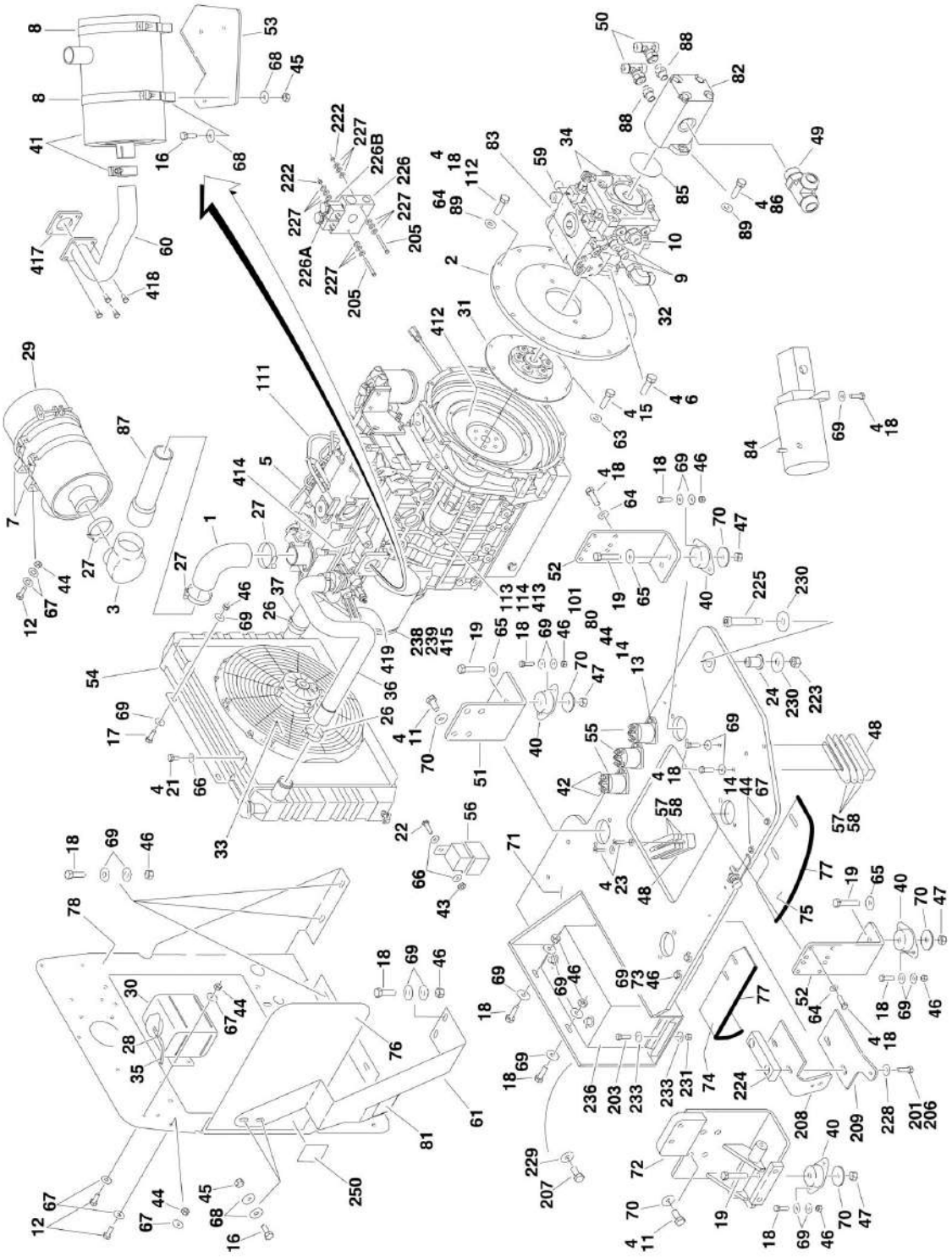

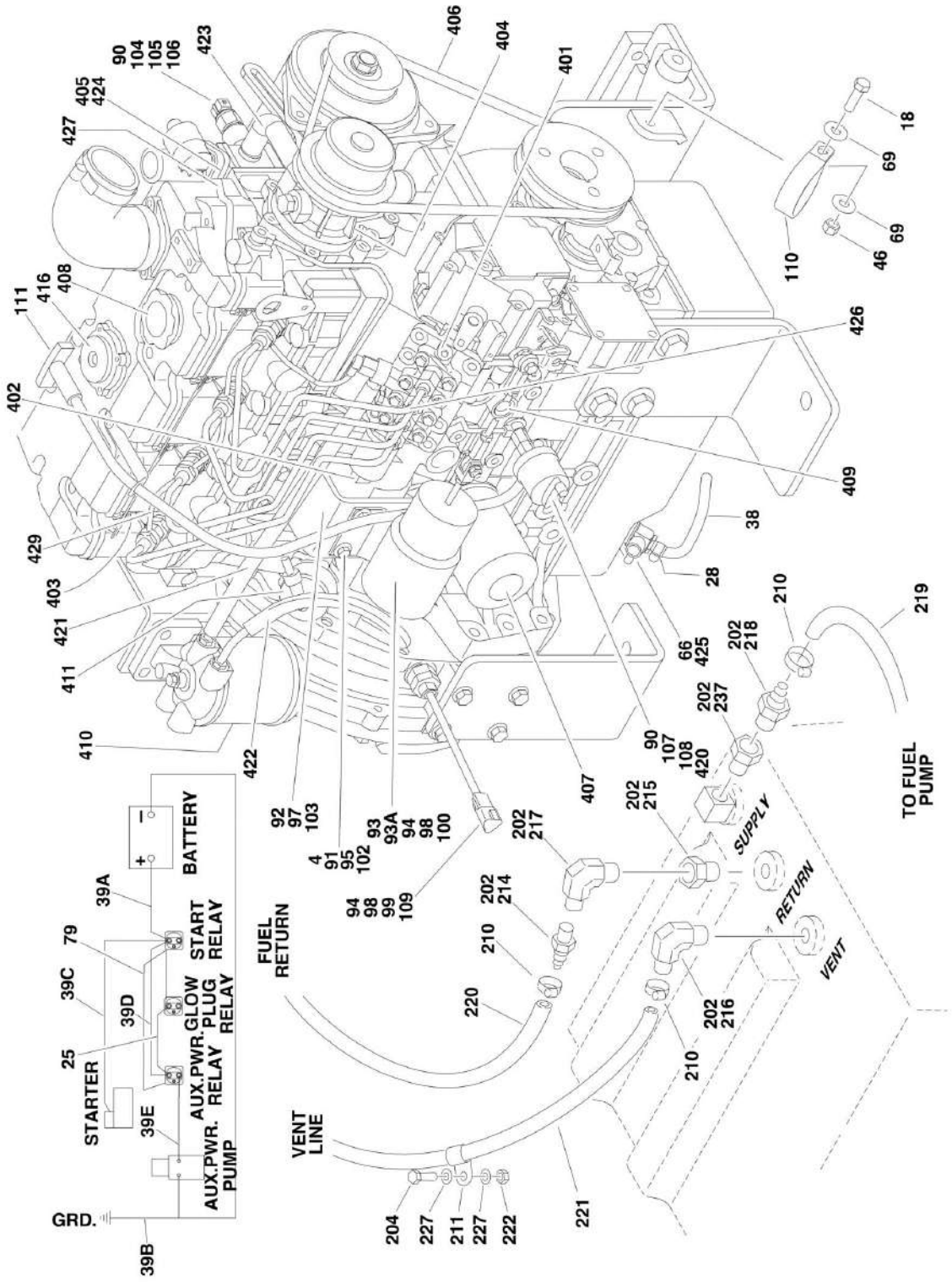
BATTERY
START RELAY
GLOW PLUG RELAY
AUX.PWR. RELAY
AUX.PWR. PUMP
STARTER
GRD.
FUEL RETURN
VENT LINE
TO FUEL PUMP
SUPPLY
RETURN
VENT

FIGURE 2-21. BELGIUM BUILT MACHINES/PERKINS ENGINE INSTALLATION

ITEM	PART NUMBER	QTY	DESCRIPTION	REV
	2000396	Ref	**PERKINS ENGINE ASSEMBLY**	E
1	2180482	1	Elbow, Rubber	
2	0080181	1	Adapter, Pump Mounting Plate	
3	0080201	1	Adapter, Elbow Air Intake	
4	0100011	AR	Compound, Locking	
5	1001095205	1	Engine, Perkins 404C-22	
6	0641812	2	Bolt 1/2in-13NC x 1-1/2in	
7	0340041	2	Band, Air Cleaner Mounting	
8	0340046	2	Band, Muffler Mounting	
9	2111010	2	Fitting, Straight	
10	2111612	1	Fitting, Straight	
11	0630569	8	Bolt M14 x 30mm	
12	0641406	8	Bolt 1/4in-20NC x 3/4in	
13	0641408	5	Bolt 1/4in-20NC x 1in	
14	0641610	3	Bolt 3/8in-16NC x 1-1/4in	
15	0641506	8	Bolt 5/16in-18NC x 3/4in	
16	0641507	6	Bolt 5/16in-18NC x 7/8in	
17	0641609	4	Bolt 3/8in-16NC x 1-1/8in	
18	0641610	35	Bolt 3/8in-16NC x 1-1/4in	
19	0641820	4	Bolt 1/2in-13NC x 2-1/2in	
21	0721004	4	Capscrew #10-24NC x 1/2in	
22	0721006	1	Capscrew #10-24NC x 3/4in	
23	0741610	2	Screw, Flat Head 3/8in-16NC x 1-1/4in	
24	0962172	1	Bushing, Flanged	
25	1060904	1	Cable, Jumper	
26	1320012	4	Clamp	
27	1320016	4	Clamp	
28	1320022	3	Clamp	
29	1340060	1	Air Cleaner Assembly	
29	7012664	1	Element, Air Cleaner	
30	1580011	1	Container, Coolant Overflow	
31	1660255	1	Coupling, Pump	
32	2131212	1	Fitting, Elbow	
33	2060032	1	Fan, Electric	
34	2151212	2	Fitting, Elbow	
35	2720058	4 in/10cm	Hose	
36	2720507	NLA	Hose, Radiator (Top) (Use p/n 1001102308)	
37	2720508	1	Hose, Radiator (Bottom)	
38	2750532	6 in/15cm	Hose	
39	2902060	1	Battery Cable Kit	B
39A	7016817	1	Cable - Battery to Starter Relay	
39B	7027041	1	Cable - Battery and Auxiliary Pump to Ground (was p/n 7016837)	
39C	7016834	1	Cable - Starter Relay to Starter	
39D	7016838	1	Cable - Starter Relay to Auxiliary Relay	
39E	7016820	1	Cable - Auxiliary Relay to Auxiliary Pump	
40	3200378	4	Mount, Motor	
41		Ref	Muffler Options:	
41	3220113	1	Spark Arresting Muffler	
41	70001017	1	Clamp	
41	3220154	NLA	Catalytic Muffler (Use p/n 1001107116)	

ITEM	PART NUMBER	QTY	DESCRIPTION	REV
41	70002705	1	Clamp	
41	70002706	1	Plug, Brass	
42	3300220	6	Nut, Washer	
43	3311005	1	Locknut #10-24NC	
44	3311405	16	Locknut 1/4in-20NC	
45	3311505	6	Locknut 5/16in-18NC	
46	3311605	19	Locknut 3/8in-16NC	
47	3311805	4	Locknut 1/2in-13NC	
48	3340399	2	Pad, Wear	
49	2170316	1	Fitting, Tee	
50	2170808	2	Fitting, Tee	
51	3577130	1	Plate, Engine Mounting (Front)	
52	3577135	2	Plate, Engine Mounting (Rear)	
53	3577134	NLA	Plate, Muffler Support (Use p/n 1001098525)	
54	3620046	1	Radiator	
54	7019656	1	Cap, Radiator	
55	3740067	3	Relay	
56	3740080	1	Relay	
57	4070497	4	Shim	
58	4070498	2	Shim	
59	2221084	1	Fitting, Tee	
60	4568743	1	Pipe, Exhaust	
61	3573937	1	Plate, Radiator Support	
62	4641272	1	Valve, Oil Drain	
63	4711500	8	Flatwasher 5/16in Thin	
64	4711600	18	Flatwasher 3/8in Thin	
65	4740274	4	Washer, Snubbing	
66	4751000	6	Flatwasher #10 Regular	
67	4751400	20	Flatwasher 1/4in Regular	
68	4751500	12	Flatwasher 5/16in Regular	
69	4751600	42	Flatwasher 3/8in Regular	
70	4751800	11	Flatwasher 1/2in Regular	
71	1580049	1	Weldment, Engine Tray	
72	4846821	1	Mount, Motor/Generator	
73	0641611	2	Bolt 3/8in-16NC x 1-3/8in	
74	3577133	1	Plate, Air	
75	3577132	1	Plate, Baffle	
76	3577131	1	Plate, Air Panel	
77	3960438	28 in /71cm	Seal, Self Gripping	
78	3577139	1	Plate, Radiator Mount	
79	4922737	1	Harness, Engine Grounding	
80	4711400	12	Flatwasher 1/4in Thin	
81	1703162	2	Decal - Caution Fan	
82	3600318	1	Gear Pump Assembly (See GEAR PUMP ASSEMBLY for Breakdown)	
83	3600385	1	Pump Assembly (See PISTON PUMP ASSEMBLY (SERIES 42 PUMP) for Breakdown)	
84	3600423	1	Auxiliary Pump Assembly (See Auxiliary Pump Assembly for Breakdown)	
85	3790152	1	O-Ring	
86	3931620	2	Capscrew, Socket Head 3/8in-16NC x 1-1/4in	

ITEM	PART NUMBER	QTY	DESCRIPTION	REV
87	4569176	1	Tube, Air Intake	
88	4641199	2	Valve, Check	
89	4891600	4	Flatwasher 3/8in Hardened	
90	0100020	AR	Sealant	
91	0760612	4	Capscrew M6 x 25mm	
92	0760810	2	Capscrew M8 x 20mm	
93	1001099927	1	Actuator Kit, Governor Pull (Includes 1600351 Actuator and Items 93A, 94, 98 & 100)	
93A	7026843	1	Linkage	
94	2820018	1 ft/31cm	Heat Shrink	
95	3290605	4	Locknut M6	
97	3574282	1	Plate, Actuator Mounting	
98	4460464	5	Pin, Male	
99	4460536	1	Connector, Female - 3 Position	
100	4460897	1	Connector, Female - 2 Position	
101	4791400	6	Starwasher 1/4in	
102	5240600	8	Flatwasher M6 Hardened	
103	5240800	2	Flatwasher M8 Hardened	
104	1001097551	1	Sensor, Coolant	
105	1001097552	1	Adapter, Coolant Sensor	
106	1001097553	1	Washer, Coolant Sensor	
107	1001097554	1	Sensor, Oil Pressure	
108	1001097555	1	Adapter, Oil Pressure Sensor	
109	1001099926	1	Sensor Kit, Speed (Includes 1001097556 Speed Sensor and Items 94, 98 & 99)	
110	1001097588	1	Clip, Tube	
111	1001097893	1	Dipstick Assembly	
111	7026885	1	Dipstick	
111	7026886	1	Tube, Dipstick	
111	7026847	2	Washer	
111	7026881	1	O-Ring	
112	0641612	3	Bolt 3/8in-16NC x 1-1/2in	
113	3290801	1	Nut M8	
114	4831900	1	Lockwasher M8	
	0275815	Ref	**PERKINS ENGINE INSTALLATION**	E
201	0100011	AR	Compound, Locking	
202	0100020	AR	Sealant, Pipe	
203	0641512	2	Bolt 5/16in-18NC x 1-1/2in	
204	0641406	1	Bolt 1/4in-20NC x 3/4in	
205	0641418	2	Bolt 1/4in-20NC x 2-1/4in	
206	0641610	2	Bolt 3/8in-16NC x 1-1/4in	
207	0642010	1	Bolt 5/8in-11NC x 1-1/4in	
208	0902443	1	Bracket, Hood Latch Mount	
209	0902444	1	Bracket, Hood Support	
210	1320022	5	Clamp, Fuel Line	
211	1320223	1	Clamp	
212	1701505	1	Decal, Diesel (Not Shown)	
213	1787217	1	Clamp, Battery Hold-Down	
214	2180536	1	Fitting, Barbed	
215	2220250	1	Fitting, Reducer	
216	2220313	1	Fitting, Elbow Barbed	
217	2220459	1	Fitting, Elbow	

ITEM	PART NUMBER	QTY	DESCRIPTION	REV
218	2220794	1	Fitting, Straight Barbed	
219	2720058	8 ft/2.4m	Hose	
220	2720271	8 ft/2.4m	Hose	
221	2750532	7 ft/2.1m	Hose	
222	3311405	3	Locknut 1/4in-20NC	
223	3312005	1	Locknut 5/8in-11NC	
224	3340399	1	Pad, Wear	
225	3900254	1	Screw, Shoulder	
226	4641317	1	Valve Assembly	
226A	7012941	2	Cartridge without Coil	
226A	7010543	2	Seal Kit - 7012941 Cartridge	
226B	7012944	2	Coil	
227	4751400	14	Flatwasher 1/4in Regular	
228	4751600	2	Flatwasher 3/8in Regular	
229	4752000	1	Flatwasher 5/8in Regular	
230	4752200	2	Flatwasher 3/4in Regular	
231	3311505	3	Locknut 5/16in-18NC	
233	4751500	1	Flatwasher 5/16in Regular	
234	2300004	2.7 gal /10.2L	Coolant, Anti-Freeze (Not Shown)	
235	3020016	2.5 gal /9.5L	Oil, Motor Mobil Delvac MX 15W-40	
236	8008750	1	Battery	
237	2220273	1	Fitting, Reducer	
238	3290501	1	Nut M5	
239	3290601	1	Nut M6	
240	2200222	1	Plug, Pipe (Not Shown - Located on Bottom of Fuel Tank)	
241	0100079	AR	Sealant (Not Shown - Used on Item 240)	
250	1706098	1	Decal - Warning Explosion/Fire	
	1001095205	Ref	**ENGINE COMPONENTS**	
401	70001386	1	Pump, Fuel Injection	
401	70001388	AR	Shim, 0.20mm	
401	70001389	AR	Shim, 0.25mm	
401	70001390	AR	Shim, 0.30mm	
401	70001391	AR	Shim, 0.35mm	
401	70001392	AR	Shim, 0.40mm	
401	70001393	AR	Shim, 0.50mm	
401	70001394	AR	Shim, 0.50mm Flat	
402	70001387	1	Solenoid, Fuel Injection	
403	70001395	4	Glowplug	
404	70001396	1	Pump, Water (Includes p/n 70001397 Only)	
404	70001397	1	Gasket, Water Pump to Plate	
404	70001398	1	Gasket, Plate to Engine Block	
405	70001400	1	Thermostat	
405	70001399	1	Gasket, Thermostat Neck to Thermostat Housing	
405	70001401	1	Gasket, Thermostat Housing to Engine Block	
406	70001402	1	Belt	
407	70001403	1	Filter, Oil	
408	70001404	1	Cap, Oil Fill	
408	70001405	1	Seal, Oil Fill Cap	
409	70001406	1	Valve, Relief	
409	70001407	1	Seal, O-Ring	

SECTION 2 - TURNTABLE

ITEM	PART NUMBER	QTY	DESCRIPTION	REV
410	70001408	1	Fuel Bowl and Filter Assembly	
410	70001409	1	Fuel Filter Kit (Includes 1 Filter Element and 4 Seals)	
411	70001410	1	Pump, Lift	
411	70001411	1	Seal, O-Ring	
412	70001412	1	Flywheel	
412	70001413	1	Ring, Starter	
413	70001414	1	Starter	
413	70001415	1	Solenoid, Start	
414	70001416	1	Gasket, Exhaust Manifold to Engine Block	
415	70001417	1	Alternator	
416	70001418	1	Valve, Breather	
417	70001419	1	Gasket, Exhaust Manifold to Exhaust Tube	
418	0700808	4	Bolt M8 x 16mm	
419	70001792	1	Lever, Alternator Adjustment Arm	
419	70001793	2	Screw	
419	70001794	1	Washer (Engine Block Side of Lever)	
419	70001796	1	Washer (Alternator Side of Lever)	
420	70002107	1	Fitting, Oil Sensor Adapter to Engine Block	
421	70002109	1	Pipe, Fuel	
422	70002098	1	Hose, Fuel	
423	70002106	1	Hose	
424	70002105	1	Housing, Thermostat	
425	70002108	1	Washer	
426	70002100	1	Pipe, Fuel Injection #1	
426	70002101	1	Pipe, Fuel Injection #2	
426	70002102	1	Pipe, Fuel Injection #3	
426	70002103	1	Pipe, Fuel Injection #4	
427	70002099	1	Gasket, Cover	
428	70002104	1	Pipe, Oil (Not Shown)	
429	70002437	1	Line, Fuel Injection Return (was p/n 70002433)	
430	70005704	1	Gasket Kit (Top) (Not Shown - Used on Engine p/n 1001095205)	
431	70005705	1	Gasket Kit (Bottom) (Not Shown - Used on Engine p/n 1001095205)	

FIGURE 2-22. PISTON PUMP ASSEMBLY (SERIES M46 PUMP)

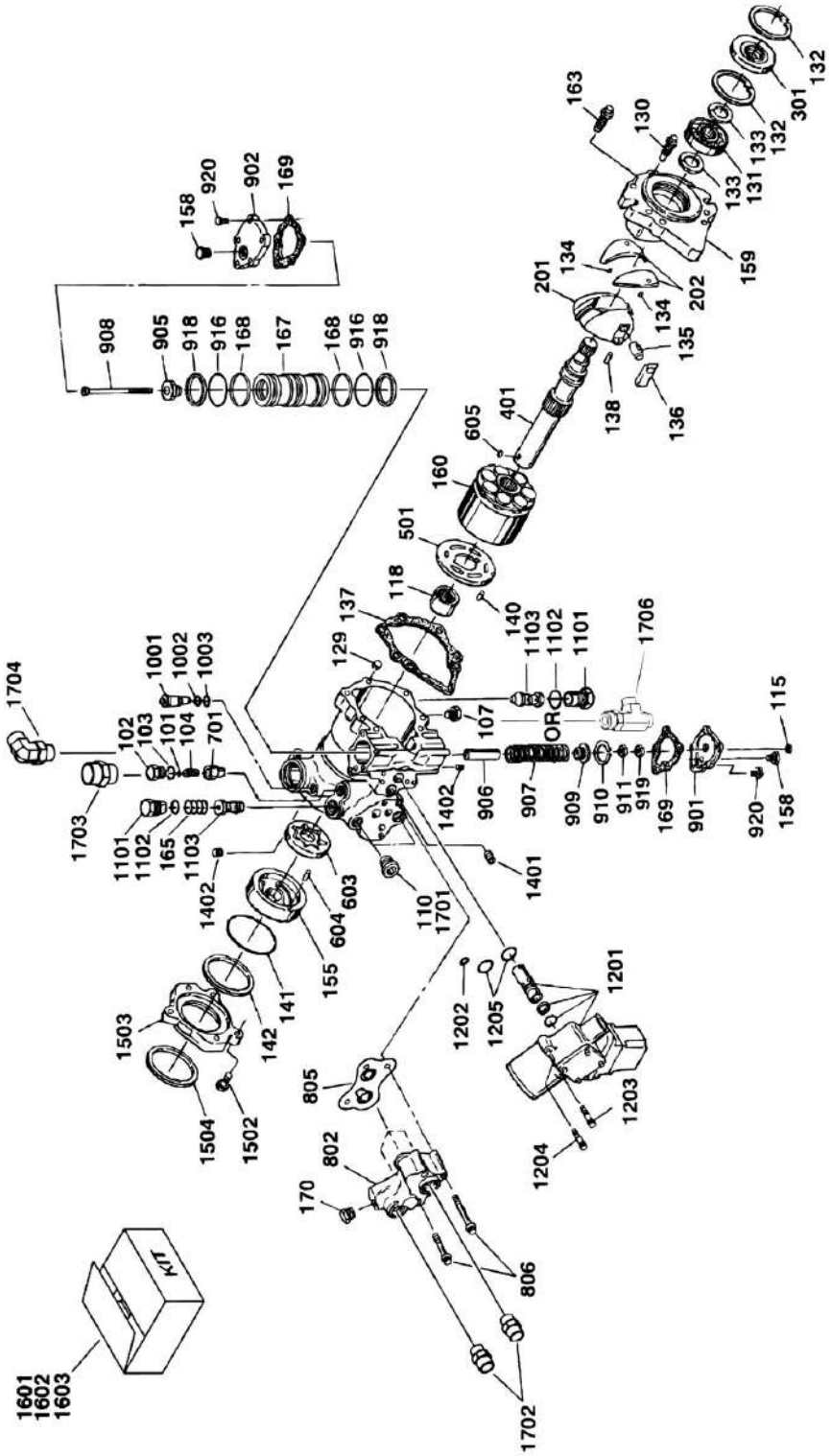

FIGURE 2-22. PISTON PUMP ASSEMBLY (SERIES M46 PUMP)

ITEM	PART NUMBER	QTY	DESCRIPTION	REV
		Ref	**PISTON PUMP USAGE CHART:**	
		Ref	**Caterpillar Engine Machines:**	
		Ref	**Caterpillar Engine Machines, 2WD:**	
	3600316 Series M46	Ref	**Caterpillar Engine Machines (SN 0300065080 through 0300100513)**	
	3600385 Series 42	Ref	**Caterpillar Engine Machines (SN 0300100514 through 0300123999)**	
		Ref	**Caterpillar Engine Machines, 4WD:**	
	3600296 Series 42	Ref	**Caterpillar Engine Machines (SN 0300065080 through 0300073424)**	
	3600385 Series 42	Ref	**Caterpillar Engine Machines (SN 0300073425 through 0300123999)**	
		Ref	**Deutz Engine Machines:**	
		Ref	**Deutz Engine Machines, 2WD**	
	3600316 Series M46	Ref	**Deutz Engine Machines (SN 0300065080 through 0300077682)**	
	3600406 Series M46	Ref	**Deutz Engine Machines (SN 0300077683 through 0300100513)**	
	3600407 Series 42	Ref	**Deutz Engine Machines (SN 0300100514 through 0300123999)**	
		Ref	**Deutz Engine Machines, 4WD:**	
	3600296 Series 42	Ref	**USA Built Machines (SN 0300065080 through 0300073424)**	
	3600385 Series 42	Ref	**USA Built Machines (SN 0300073425 through 0300077682)**	
	3600407 Series 42	Ref	**USA Built Machines (SN 0300077683 through 0300123999)**	
	3600296 Series 42	Ref	**Belgium Built Machines (Prior to SN 1300000129)**	
	3600385 Series 42	Ref	**Belgium Built Machines (SN 1300000129 through 1300006000)**	
	3600406 Series M46	Ref	**Artic Machines (SN 0300065080 through 0300095240)**	
	3600407 Series 42	Ref	**Artic Machines (SN 0300095241 through 0300123999)**	
		Ref	**Ford Engine Machines:**	
		Ref	**Ford Engine Machines, 2WD:**	
	3600316 Series M46	Ref	**Ford Engine Machines (SN 0300065080 through 0300078472)**	
	3600406 Series M46	Ref	**Ford Engine Machines (SN 0300078473 through 0300123999)**	
		Ref	**Ford Engine Machines, 4WD:**	
	3600296 Series 42	Ref	**USA Built Machines (SN 0300065080 through 0300073424)**	
	3600385 Series 42	Ref	**USA Built Machines (SN 0300073425 through 0300078472)**	
	3600407 Series 42	Ref	**USA Built Machines (SN 0300078473 through 0300123999)**	
		Ref	**GM Engine Machines:**	
	3600407 Series 42	Ref	**All Machines**	
		Ref	**Perkins Engine Machines:**	
	3600385 Series 42	Ref	**All Machines**	
		Ref	**NOTE: SERIES M46 SHOWN HERE. SERIES 42 PUMPS SHOWN ON THE FOLLOWING ILLUSTRATION.**	
		Ref	**PISTON PUMP ASSEMBLIES**	
	3600316	Ref	**Pump (Without Fittings)**	B
	3600406	Ref	**Pump (With Fittings)**	B
101	7007413	1	Shim Kit - Relief Valve	
102	7007414	1	Plug (Includes Item 103)	
103	2900752	1	O-Ring	

SECTION 2 - TURNTABLE

ITEM	PART NUMBER	QTY	DESCRIPTION	REV
104	7007416	1	Spring, Relief Valve	
107	7007419	2	Plug	
110	7022318	2	Plug	
115	7007423	1	Nut, Special	
118	7007425	1	Bearing, Needle	
129	7007435	1	Pin, Spring	
130	7021202	1	Screw, Torx	
131	7007437	1	Bearing, Ball	
132	7007438	2	Ring	
133	7007439	2	Ring	
134	7021203	2	Pin, Spring	
135	7007441	1	Handle, Pin	
136	7007442	1	Sleeve, Bearing	
137	2900752	1	Gasket, Front Cover	
138	7007444	1	Pin	
140	7007446	1	Pin	
141	See Note	1	O-Ring (Note: Use Item 1601 or 1603.)	
142	See Note	1	Ring, Load Temper (Note: Use Item 1601 or 1603.)	
155	7007452	1	Cover, Gerotor	
158	7007208	2	Plug	
159	7007454	1	Cover, Front	
160	7010116	1	Cylinder Block Kit	
163	7021207	6	Screw, Torx	
165	7021264	2	Spring, Compression	
167	7007494	1	Piston, Servo	
168	2900752	2	Bearing	
169	2900752	2	Gasket, Servo	
170	7007470	2	Plug	
		Ref	Swashplate Group	
201	7007457	1	Swashplate	
202	7021212	1	Journal, Bearing	
		Ref	Front Seal Group	
301	2900752	1	Seal, Lip	
		Ref	Pump Shaft Group	
401	7023978	1	Shaft	
		Ref	Rotation Group	
501	7021214	1	Plate, Valve	
		Ref	Pump Displacement Group	
603	7007463	1	Gerotor Assembly	
604	7007464	1	Pin	
605	7007465	1	Key, Woodruff	
		Ref	Valve Group	
701	7007417	1	Plate, Valve	
		Ref	Remote Filter Group	
802	7007466	1	Adapter, Remote Filtration (Without Bypass)	
805	2900752	1	Seal	
806	7021218	3	Screw	
		Ref	Displacement Group	
901	7021219	1	Cover, Servo (With Adjuster)	
902	7021220	1	Cover, Servo (Without Adjuster)	
905	7023979	1	Guide, Spring	

ITEM	PART NUMBER	QTY	DESCRIPTION	REV
906	7007484	1	Stop, Servo	
907	7007485	1	Spring	
908	7021221	1	Screw	
909	7007487	1	Guide, Spring	
910	7007488	1	Ring, Retaining	
911	7021222	1	Locknut	
916	See Note	2	Ring, Piston (Note: Use Item 1601 or 1602.)	
918	See Note	2	O-Ring (Note: Use Item 1601 or 1602.)	
919	7021206	1	Nut, Jam	
920	7021223	10	Screw	
		Ref	By-Pass Valve Group	
1001	7007472	1	Valve, Bypass	
1002	2900752	1	Ring, Back-Up	
1003	2900752	1	O-Ring	
		Ref	Pressure Protection Group	
1101	7021209	2	Plug Assembly	
1102	2900752	2	O-Ring	
1103	7021263	2	Valve, SCR	
		Ref	Control Group	
1201	7023980	1	Control, Dual Oil-Filled	
1201	7007496	1	Coil Assembly (Pilot)	
1201	7007497	1	Plug (Pump)	
1201	7007498	1	Plug (Valve Harness)	
1202	2900752	1	O-Ring	
1203	7007478	2	Screw	
1204	7001498	2	Screw	
1205	2900752	2	O-Ring	
		Ref	Control Orifice Group	
1401	7007475	1	Plug, Orifice/Screen (.156)	
1402	7021226	2	Plug, Orifice	
		Ref	Adapter Group	
1502	0641608	5	Bolt	
1503	7007476	1	Adapter, Auxiliary Pump	
1504	7021298	1	Seal	
1601	2900752	1	Seal Kit - Complete (Includes Items 103, 137, 141, 142, 168, 169, 301, 805, 916, 918, 1002, 1003, 1102, 1202, & 1205)	
1602	7007412	1	Seal Kit - Servo Piston (Includes Items 916 & 918)	
1603	2900826	1	Charge Pump Kit (Includes Items 141, 142, 155, 603, 604 & 605)	
		Ref	**PUMP ASSEMBLY FITTINGS (3600406 PUMP ONLY)**	A
1701	2110406	1	Fitting, Straight	
1702	2111010	2	Fitting, Straight	
1703	2111616	1	Fitting, Straight	
1704	2131212	1	Fitting, Elbow	
1705	2151616	2	Fitting, Elbow (Not Shown)	
1706	2221084	1	Fitting, Tee	

FIGURE 2-23. PISTON PUMP ASSEMBLY (SERIES 42 PUMP)

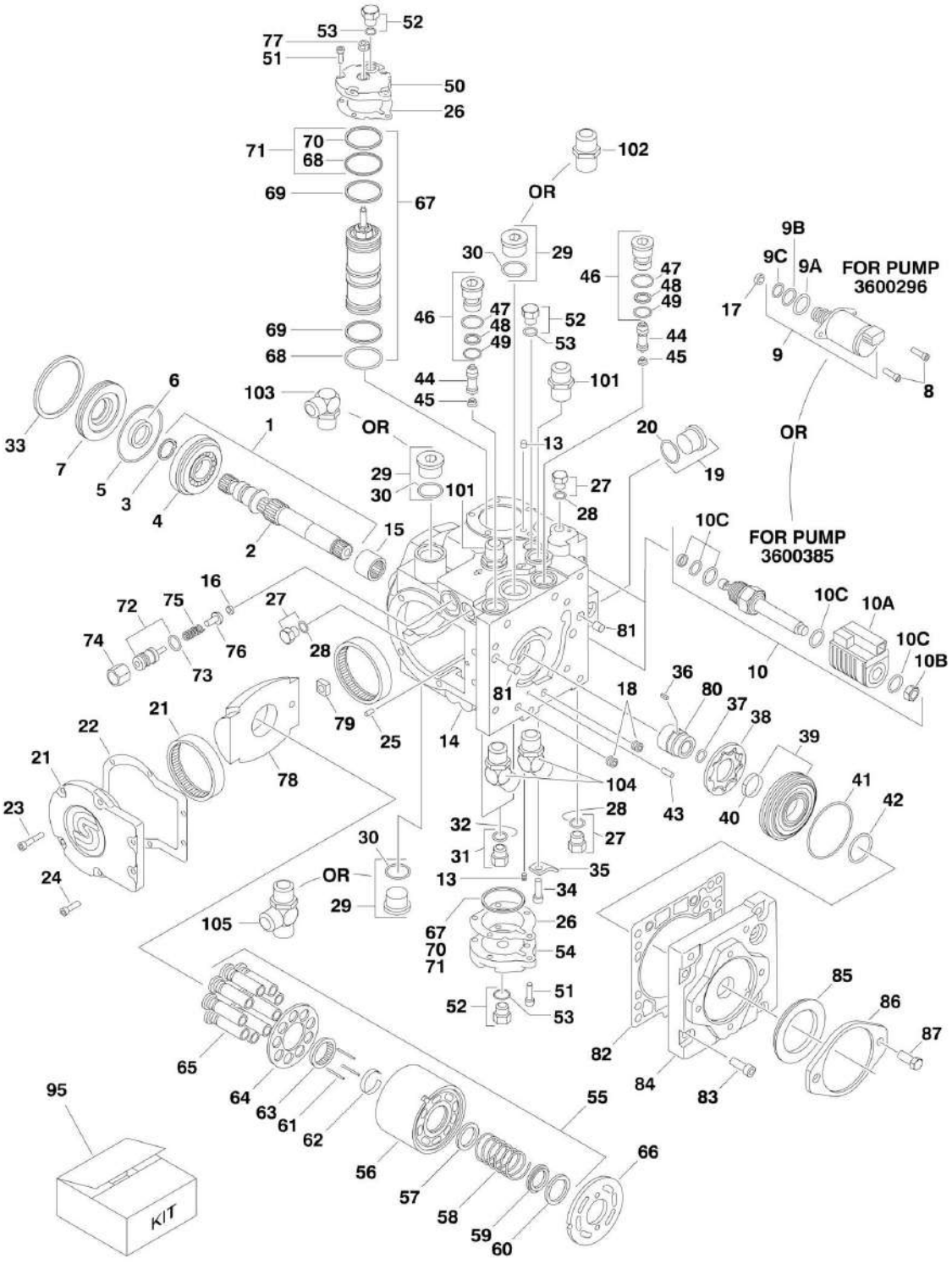

FIGURE 2-23. PISTON PUMP ASSEMBLY (SERIES 42 PUMP)

ITEM	PART NUMBER	QTY	DESCRIPTION	REV
		Ref	**PISTON PUMP USAGE CHART:**	
		Ref	**Caterpillar Engine Machines:**	
		Ref	**Caterpillar Engine Machines (2WD):**	
	3600316 Series M46	Ref	**Caterpillar Engine Machines (SN 0300065080 through 0300100513)**	
	3600385 Series 42	Ref	**Caterpillar Engine Machines (SN 0300100514 through 0300123999)**	
		Ref	**Caterpillar Engine Machines (4WD):**	
	3600296 Series 42	Ref	**Caterpillar Engine Machines (SN 0300065080 through 0300073424)**	
	3600385 Series 42	Ref	**Caterpillar Engine Machines (SN 0300073425 through 0300123999)**	
		Ref	**Deutz Engine Machines:**	
		Ref	**Deutz Engine Machines (2WD):**	
	3600316 Series M46	Ref	**Deutz Engine Machines (SN 0300065080 through 0300077682)**	
	3600406 Series M46	Ref	**Deutz Engine Machines (SN 0300077683 through 0300100513)**	
	3600407 Series 42	Ref	**Deutz Engine Machines (SN 0300100514 through 0300123999)**	
		Ref	**Deutz Engine Machines (4WD):**	
	3600296 Series 42	Ref	**USA Built Machines (SN 0300065080 through 0300073424)**	
	3600385 Series 42	Ref	**USA Built Machines (SN 0300073425 through 0300077682)**	
	3600407 Series 42	Ref	**USA Built Machines (SN 0300077683 through 0300123999)**	
	3600296 Series 42	Ref	**Belgium Built Machines (Prior to SN 1300000129)**	
	3600385 Series 42	Ref	**Belgium Built Machines (SN 1300000129 through 1300006000)**	
	3600406 Series M46	Ref	**Arctic Machines (SN 0300065080 through 0300095240)**	
	3600407 Series 42	Ref	**Arctic Machines (SN 0300095241 through 0300123999)**	
		Ref	**Ford Engine Machines:**	
		Ref	**Ford Engine Machines (2WD):**	
	3600316 Series M46	Ref	**Ford Engine Machines (SN 0300065080 through 0300078472)**	
	3600406 Series M46	Ref	**Ford Engine Machines (SN 0300078473 through 0300123999)**	
		Ref	**Ford Engine Machines (4WD):**	
	3600296 Series 42	Ref	**Ford Engine Machines (SN 0300065080 through 0300073424)**	
	3600385 Series 42	Ref	**Ford Engine Machines (SN 0300073425 through 0300078472)**	
	3600407 Series 42	Ref	**Ford Engine Machines (SN 0300078473 through 0300123999)**	
		Ref	**GM Engine Machines:**	
	3600407 Series 42	Ref	**All Machines**	
		Ref	**Perkins Engine Machines:**	
	3600385 Series 42	Ref	**All Machines**	
		Ref	**NOTE: SERIES 42 SHOWN HERE. SERIES M46 PUMPS SHOWN ON THE PRECEDING ILLUSTRATION.**	
		Ref	**PISTON PUMP ASSEMBLIES**	
	3600296	Ref	**Pump Assembly (Without Fittings)**	D
	3600385	Ref	**Pump Assembly (Without Fittings)**	A
	3600407	Ref	**Pump Assembly (With Fittings)**	B

SECTION 2 - TURNTABLE

ITEM	PART NUMBER	QTY	DESCRIPTION	REV
		Ref	**Note: Original Equipment Pump p/n 3600296 may have been replaced with p/n 3600385 as a Service Replacement. Identify component before ordering parts.**	
1	7021240	1	Shaft Assembly (Includes Items 2-4)	
2	7021237	1	Shaft	
3	7021238	1	Ring, Retaining	
4	7021239	1	Bearing, Roller	
5	7021280	1	O-Ring	
6	7021242	1	Seal, Lip	
7	7021243	1	Carrier, Seal Shaft	
8	See Note	4	Screw (3600296 Pump Only) (Note: Not available for purchase)	
9	7022373	2	Solenoid Assembly (Includes Items 9A - 9C) (3600296 Pump Only)	
9A	7022374	2	O-Ring (3600296 Pump Only)	
9B	7022375	2	O-Ring (3600296 Pump Only)	
9C	7022376	2	O-Ring (3600296 Pump Only)	
10	7024855	2	Solenoid Assembly (3600385 & 4640407 Pumps Only)	
10A	7024856	2	Coil (3600385 & 4640407 Pumps Only) (1 Per Assy)	
10B	7024857	2	Nut (3600385 & 4640407 Pumps Only) (1 Per Assy)	
10C	7024858	2	Seal Kit - 7024855 Cartridge (3600385 & 4640407 Pumps Only) (1 Per Assy)	
13	7022377	2	Orifice	
14	7022378	1	Housing Assembly (Includes Items 15-20)	
15	7021249	1	Bearing, Needle	
16	7021254	1	Screen, Filter (3600296 Pump Only)	
17	7022379	2	Screen, Filter (3600296 Pump Only)	
18	7001485	2	Plug	
19	7022380	1	Plug (Includes Item 20)	
20	7022381	1	O-Ring	
21	7021248	1	Side Cover Assembly (Includes Item 22)	
22	7021280	1	Gasket	
23	7021255	4	Screw	
24	7021251	2	Screw	
25	7021250	1	Pin	
26	7021280	2	Gasket	
27	7021283	2	Plug Assembly (3600296 Pump Only)	
28	7021284	2	O-Ring (3600296 Pump Only)	
29	7007419	2	Plug Assembly	
30	7021280	2	O-Ring	
31	7007470	2	Plug Assembly	
32	7021280	2	O-Ring	
33	7021257	1	Ring, Retaining	
34	7021251	1	Screw	
35	7022342	1	Bracket, Lifting	
36	7022342	1	Key	
37	7022341	1	Ring, Retaining	
38	7021258	1	Gerotor	
39	7021260	1	Gerotor Cover Assembly	
40	7021259	1	Bearing, Journal	
41	Not Required	0	O-Ring (3600296 Pump Only)	
42	7021280	1	O-Ring	
43	See Note	1	Pin (Note: Not available for purchase)	

ITEM	PART NUMBER	QTY	DESCRIPTION	REV
44	7021263	2	SCR Valve (3600296 Pump Only)	
45		Ref	Spring	
45	7021264	1	Spring (3600296 Pump Only)	
45	7024800	1	Spring (3600385 & 4640407 Pumps Only)	
46	7021265	2	Bypass Valve Assembly (Includes Items 47-49)	
47	7021280	2	O-Ring	
48	7021280	2	Ring, Back Up	
49	7021280	2	O-Ring	
50	7022382	1	Cover, Servo	
51	7021255	10	Screw	
52	7007470	1	Plug Assembly	
53	7021280	1	O-Ring	
54	7021268	1	Cover, Servo	
55		Ref	Cylinder Block Assembly (Includes Items 56-65)	
55	7022383	1	Cylinder Block Assembly (3600296 Pump Only)	
55	7021269	1	Cylinder Block Assembly (3600385 & 4640407 Pumps Only)	
56		Ref	Cylinder Block	
56	7022384	1	Cylinder Block (3600296 Pump Only)	
56	7021270	1	Cylinder Block (3600385 & 4640407 Pumps Only)	
57	7021271	1	Washer	
58	7021272	1	Spring	
59	7021273	1	Washer	
60	7021274	1	Ring, Retaining	
61	7021275	3	Pin, Slipper Hold Down	
62	7021276	1	Retainer, Hold Down Pin	
63	7021277	1	Guide, Slipper Retainer	
64	7021278	1	Retainer, Slipper	
65	7021279	9	Piston Assembly	
66	7021281	1	Plate, Valve	
67	7022385	1	Servo Piston Assembly (Includes Items 68-70)	
68	7021280	2	O-Ring	
69	7021280	2	Ring, Bearing	
70	7021280	2	Ring, Piston	
71	7007412	1	Servo Piston Ring Kit (Includes Items 68 & 70 Only)	
72		Ref	Plug Assembly	
72	7021288	1	Plug Assembly (3600296 Pump Only)	
72	7022346	1	Plug Assembly (3600385 & 4640407 Pumps Only)	
73	7021280	1	O-Ring	
74	7021290	1	Nut	
75		Ref	Spring	
75	7021291	1	Spring (3600296 Pump Only)	
75	7022347	1	Spring (3600385 & 4640407 Pumps Only)	
76		Ref	Poppet	
76	7021292	1	Poppet (3600296 Pump Only)	
76	7024804	1	Poppet (3600385 & 4640407 Pumps Only)	
77	7021280	1	Nut, Seal	
78	7022386	1	Swashplate	
79	7022387	1	Slider, Block	
80	7021294	1	Coupling	
81	7001481	2	Pin	
82	70002257	1	Gasket	

ITEM	PART NUMBER	QTY	DESCRIPTION	REV
83	7021296	7	Screw	
84	7021297	1	Cover, Charge Pump	
85	7021298	1	Seal	
86	7021299	1	Plate, Cover	
87	7007289	2	Screw	
88	7007470	1	Plug (Not Shown) (3600385 & 4640407 Pumps Only)	
89	7021256	1	O-Ring (Not Shown) (3600385 & 4640407 Pumps Only)	
95	7021280	1	Seal Kit (Includes Items 5-6, 22, 26, 30, 32, 42, 47-49, 53, 68-70, 73, 77, 82 & 89)	
		Ref	**PUMP ASSEMBLY FITTINGS (3600407 PUMP ONLY)**	C
101	2111010	2	Fitting, Straight	
102	2111612	1	Fitting, Straight	
103	2131212	1	Fitting, Elbow	
104	2151616	2	Fitting, Elbow	
105	2221084	1	Fitting, Tee	

FIGURE 2-24. GEAR PUMP ASSEMBLY

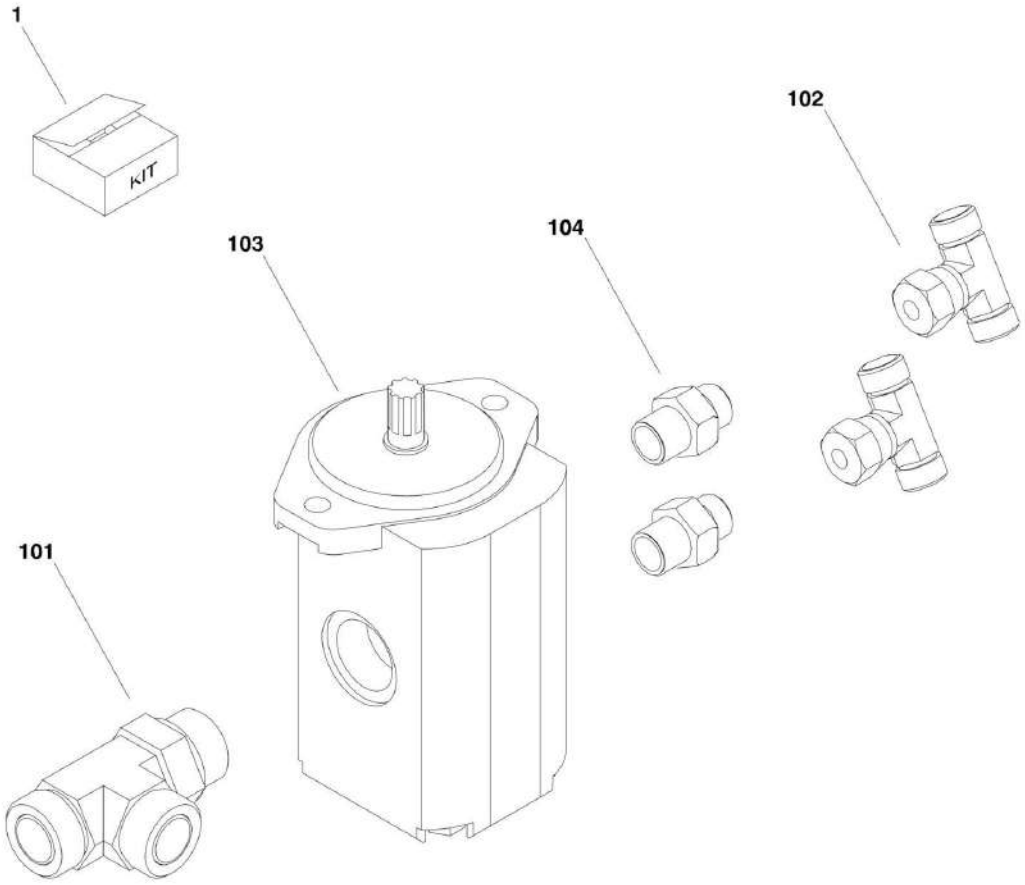

FIGURE 2-24. GEAR PUMP ASSEMBLY

ITEM	PART NUMBER	QTY	DESCRIPTION	REV
		Ref	**GEAR PUMP ASSEMBLY**	
		Ref	**Usage:**	
	3600318	Ref	**Caterpillar Engine Machines (All Machines)**	
	3600318	Ref	**Deutz Engine Machines (USA Built Machines) (SN 0300065080 through 0300077682)**	
	3600408	Ref	**Deutz Engine Machines (USA Built Machines) (SN 0300077683 through 0300123999)**	
	3600318	Ref	**Deutz Engine Machines (Belgium Built Machines)**	
	3600318	Ref	**Ford Engine Machines (USA Built Machines) (SN 0300065080 through 0300078472)**	
	3600408	Ref	**Ford Engine Machines (USA Built Machines) (SN 0300078473 through 0300123999)**	
	3600441	Ref	**GM Engine Machines (All Machines)**	
	3600318	Ref	**Perkins Engine Machines (All Machines)**	
	3600318	Ref	**GEAR PUMP ASSEMBLY**	B
1	7023929	1	Seal Kit (Not Shown)	
		Ref	**Note: Seal kit is Only serviceable part for this item**	
		Ref	**GEAR PUMP SUB-ASSEMBLY**	
	3600408	Ref	**Deutz Engine Machines (USA Built Machines) (SN 0300077683 through 0300123999)**	A
	3600408	Ref	**Ford Engine Machines (SN 0300078473 through 0300123999)**	A
	3600441	Ref	**GM Engine Machines**	A
101	2170316	1	Fitting, Tee	
102	2170808	AR	Fitting, Tee Options:	
102		Ref	Deutz and Ford Engine Machines	
102		Ref	GM Engine Machines	
103	3600318	1	Gear Pump Assembly	
103	7023929	1	Seal Kit - 3600318 Pump	
104	4641199	2	Valve, Check	
		Ref	**(Note: Seal kit is Only serviceable part for this item.)**	

FIGURE 2-25. AUXILIARY PUMP ASSEMBLY

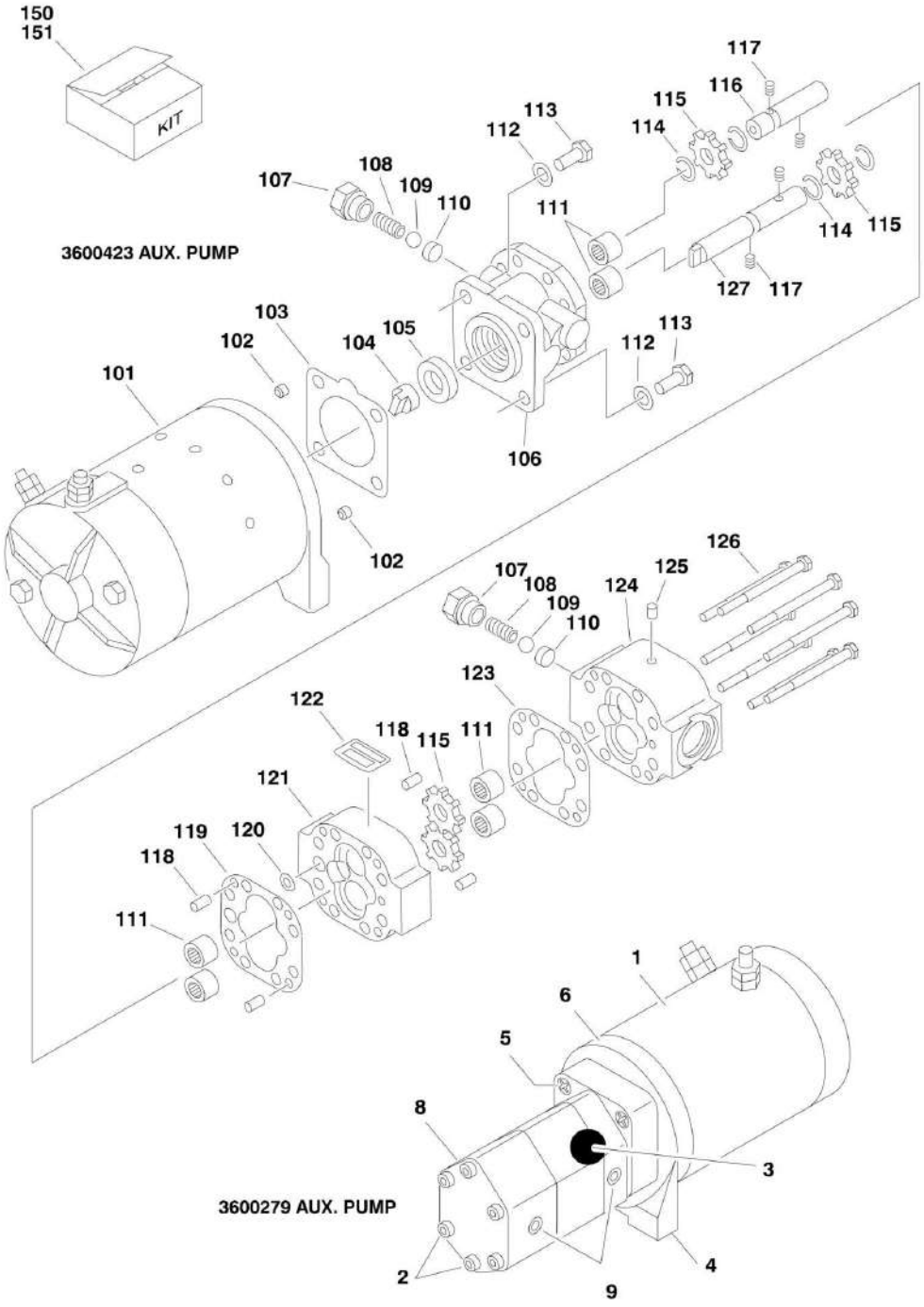

FIGURE 2-25. AUXILIARY PUMP ASSEMBLY

ITEM	PART NUMBER	QTY	DESCRIPTION	REV
		Ref	**AUXILIARY PUMP ASSEMBLIES**	
		Ref	**Usage:**	
	3600279	Ref	**USA Built Machines (Factory Installed) (SN 0300065080 through 0300106544)**	
	3600423	Ref	**USA Built Machines (Service Replacement) (SN 0300065080 through 0300106544)**	
	3600423	1	**USA Built Machines (SN 0300106545 through 0300123999)**	
	3600279	1	**Belgium Built Machines (Factory Installed) (Prior to SN 1300003239)**	
	3600423	1	**Belgium Built Machines (Service Replacement) (Prior to SN 1300003239)**	
	3600423	Ref	**Belgium Built Machines (SN 130000329 through 1300006000)**	
		Ref	**Note: Original Equipment Pump p/n 3600279 may have been replaced with p/n 3600423 as a Service Replacement. Identify component before ordering parts.**	
	3600279	Ref	**AUXILIARY PUMP ASSEMBLY**	B
1	7016768	1	Motor, Replacement	
1	7013757	1	Brush Kit	
2	7016745	4	Capscrew, Socket Head 5/16in-24NF x 4-3/4in	
3	7013711	1	Coupling, Drive	
4	7016769	1	Bracket, Mounting	
5	7016744	2	Screw 5/16in-18NC x 1in	
6	7016746	1	Adapter, Mounting	
7	7013766	2	Pin (Not Shown)	
8	7013771	1	Pump, Replacement	
8	7013701	1	Seal Kit - 7013701 Pump	
9	See Note	2	Valve, Check (Note: Not available for purchase)	
	3600423	Ref	**AUXILIARY PUMP ASSEMBLY**	A
101	7011067	1	Motor and Adapter	
102	See Note	2	Setscrew (Note: Not Available - Purchase Locally)	
103	7011044	1	Gasket, Mounting	
104	7011016	1	Coupling	
105	70000969	1	Seal, Shaft	
106	70000978	1	Stator	
107	70000978	2	Cap Assembly	
108	70000978	2	Spring	
109	70000978	2	Ball	
110	70000978	2	Seat	
111	70000976	6	Bearing, Needle	
112	70000978	4	Washer	
113	70000978	4	Screw	
114	70000970	4	Ring, Retaining	
115	70000971	4	Gear	
116	70000972	1	Shaft, Idler	
117	70000978	4	Pin, Drive	
118	70000978	4	Pin, Dowel	
119	70000973	1	Gasket	
120	See Note	1	O-Ring (Note: Use Item 150 or 151.)	
121	70000978	1	Housing, Gear	
122	See Note	1	Label (Note: Not Available for Purchase)	
123	7000974	1	Gasket	

SECTION 2 - TURNTABLE

ITEM	PART NUMBER	QTY	DESCRIPTION	REV
124	70000978	1	Housing, Gear	
125	70000978	1	Plug	
126	70000978	8	Screw	
127	70000975	1	Shaft, Drive	
150	70000977	1	Seal Kit - 3600423 Assembly (Includes Items 103, 105, 120 & Qty 2 O-Rings for Item 107)	
151	70000978	1	Replacement Pump Kit (Includes Items 103-121 & 123-127)	

FIGURE 2-26. TANK INSTALLATIONS

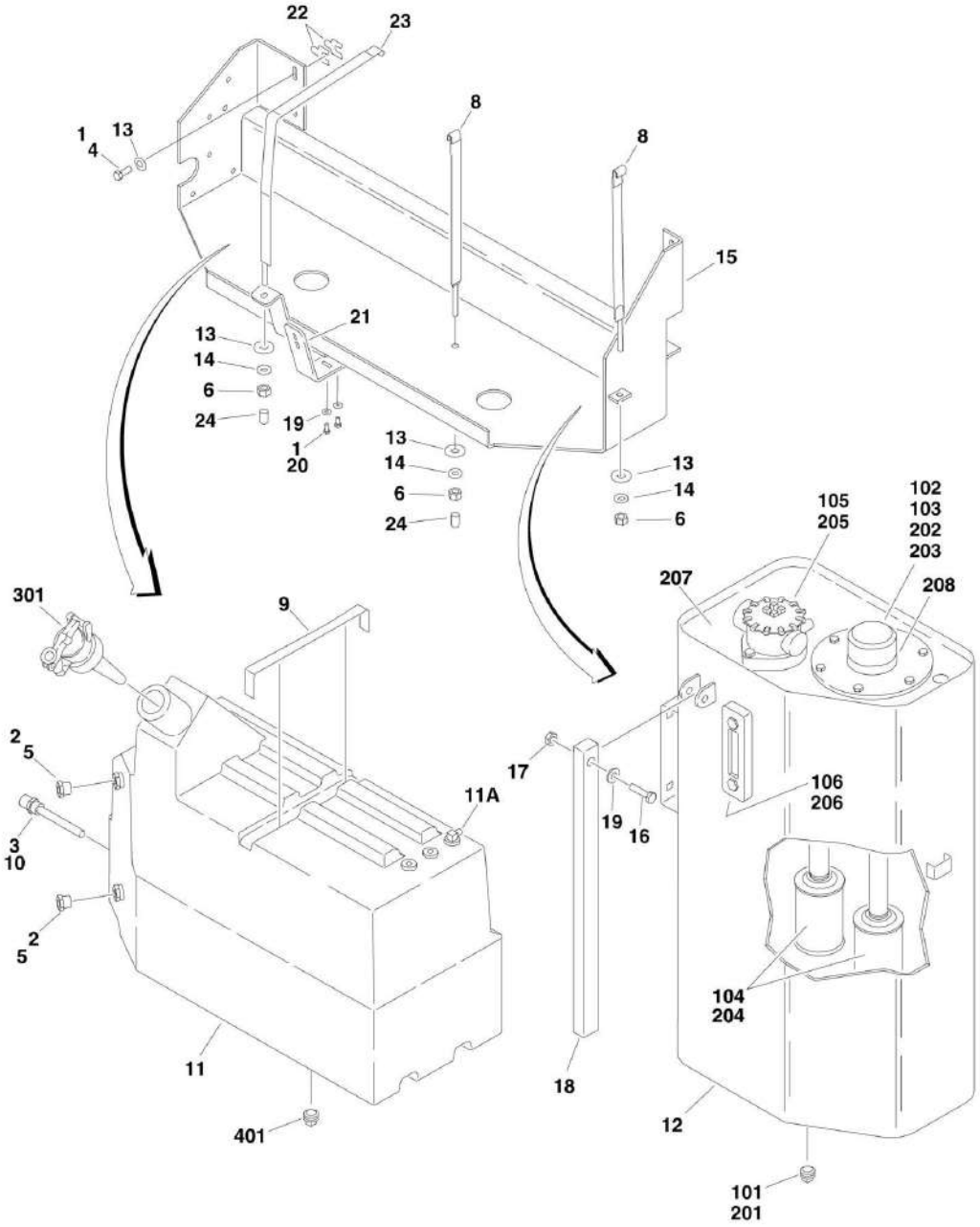

FIGURE 2-26. TANK INSTALLATIONS

ITEM	PART NUMBER	QTY	DESCRIPTION	REV
		Ref	**TANK INSTALLATIONS**	
	0271074	Ref	**USA Built Machines (SN 0300065080 through 0300070585)**	D
	0272669	Ref	**USA Built Machines (SN 0300070586 through 0300109285)**	E
	0272669	Ref	**USA Built Diesel Engine Machines (SN 0300109286 through 0300123999)**	E
	1001091567	Ref	**USA Built Gas Engine Machines (SN 0300109286 through 0300123999)**	A
	0271074	Ref	**Belgium Built Machines (Including 1300000001)**	D
	0272669	Ref	**Belgium Built Machines (SN 1300000002 through 1300000004)**	D
	0272491	Ref	**Belgium Built Machines (SN 1300000005 through 1300006000)**	E
1	0100011	AR	Compound, Locking	
2	0100020	AR	Sealant, Pipe	
3	0100079	AR	Permatex	
4	0641608	4	Bolt 3/8in-16NC x 1in	
5	2420115	2	Gauge, Sight	
6		Ref	Nut Options: 3/8in-16NC	
6	3311601	3	Nut (0271074 / 0272491 Installation)	
6	Not Required	1	Nut (0272669/1001091567 Installation)	
8		Ref	Strap, Tank Mount Options:	
8	4240136	2	Strap, Tank Mount (0271074 Installation)	
8	Not Required	1	Strap, Tank Mount (0272491/0272669/1001091567 Installations)	
9	4280295	2 ft/.61m	Strip, Bumper	
10	4360436	1	Switch, Fuel Level	
11		Ref	Tank, Fuel Options (Includes Standard Non-Locking Cap):	
11	4400408	1	Tank, Fuel (0271074 / 0272669 / 0272491 Installations)	
11	1001091560	1	Tank, Fuel (1001091567 Installation)	
11A	7020056	1	Fitting and Hose (Supply Line)	
12		Ref	Hydraulic Tank Assembly Options:	
12	4400435	1	Hydraulic Tank Assembly (0271074 Installation) (See Items 101-106 for Breakdown)	
12	4400451	1	Hydraulic Tank Assembly (0272669 / 0272491 / 1001091567 Installations) (See Items 201-209 for Breakdown)	
13	4751600	8	Flatwasher 3/8in Regular	
14	4761600	4	Lockwasher 3/8in	
15		Ref	Tray Weldment Options:	
15	4846375	1	Tray Weldment (0271074 / 0272669 / 1001091567 Installations)	
15	4846665	1	Tray Weldment (0272491 Installation)	
16	0641416	1	Bolt 1/4in-20NC x 2in	
17	3311405	1	Locknut 1/4in-20NC	
18	4567627	1	Tube, Hood Prop	
19	4751400	4	Flatwasher 1/4in Regular	
20	0641405	2	Bolt 1/4in-20NC x 5/8in	
21	0902535	1	Bracket, Hood Latch	
22	4070410	2	Shim	
23	4240145	1	Strap, Tank Mount	
24	1120532	2	Cap, Protective	
25	2820035	2 ft/.61m	Insulate, Tubing (Not Shown)	
		Ref	**Hydraulic Tank Assembly Options:**	
	4400435	Ref	**0271074 Tank Installation**	F
101	7014812	1	Plug, Magnetic	

SECTION 2 - TURNTABLE

ITEM	PART NUMBER	QTY	DESCRIPTION	REV
102	7014811	1	Breather/Fill Cap	
103	7014816	1	Screen	
104	7014801	2	Strainer	
105	7020226	1	Assembly Filter, Return	
105	7023205	1	Filter, Element	
106	7014802	1	Gauge, Sight	
	4400451	Ref	**0272669 Tank Installation**	G
	4400451	Ref	**0272491 Tank Installation**	G
	4400451	Ref	**1001091567 Tank Installation**	G
201	7024446	1	Plug, Magnetic	
202	7024444	1	Cap, Fill (LENZ BRAND)	
202	See Note	1	Cap Fill (HYDAC BRAND) (Note: Use p/n 70004862)	
203	7024445	1	Screen (LENZ BRAND)	
203	See Note	1	Screen (HYDAC BRAND) (Note: Use p/n 70004862)	
204	7024442	2	Strainer	
205	7020226	1	Assembly Filter, Return	
205	7023205	1	Filter, Element	
205	70002768	1	Spring, Return Filter Assembly	
206	7024441	1	Gauge, Sight	
207	7024439	1	Cover	
208	7024443	1	Filler Neck	
209	7024440	1	Gasket (Not Shown)	
301		Ref	**FUEL CAP OPTIONS**	
301	7016314	Ref	Standard Non-Locking Cap (Diesel Engine Machines)	
301	7016314	1	Standard Non-Locking Cap (Gas Engine Machines) **(SN 0300065080 through 0300109285)**	
301	70001103	Ref	Standard Non-Locking Cap (Gas Engine Machines) **(SN 0300109286 through 0300123999)**	
301	1120484	Ref	Locking Cap (Red)	
301	1120487	Ref	Locking Cap (Blue)	
		Ref	**ENGINE INSTALLATIONS**	
401	2200222	1	Plug	
401	0100020	AR	Sealant	

FIGURE 2-27. GROUND CONTROL BOX ASSEMBLY

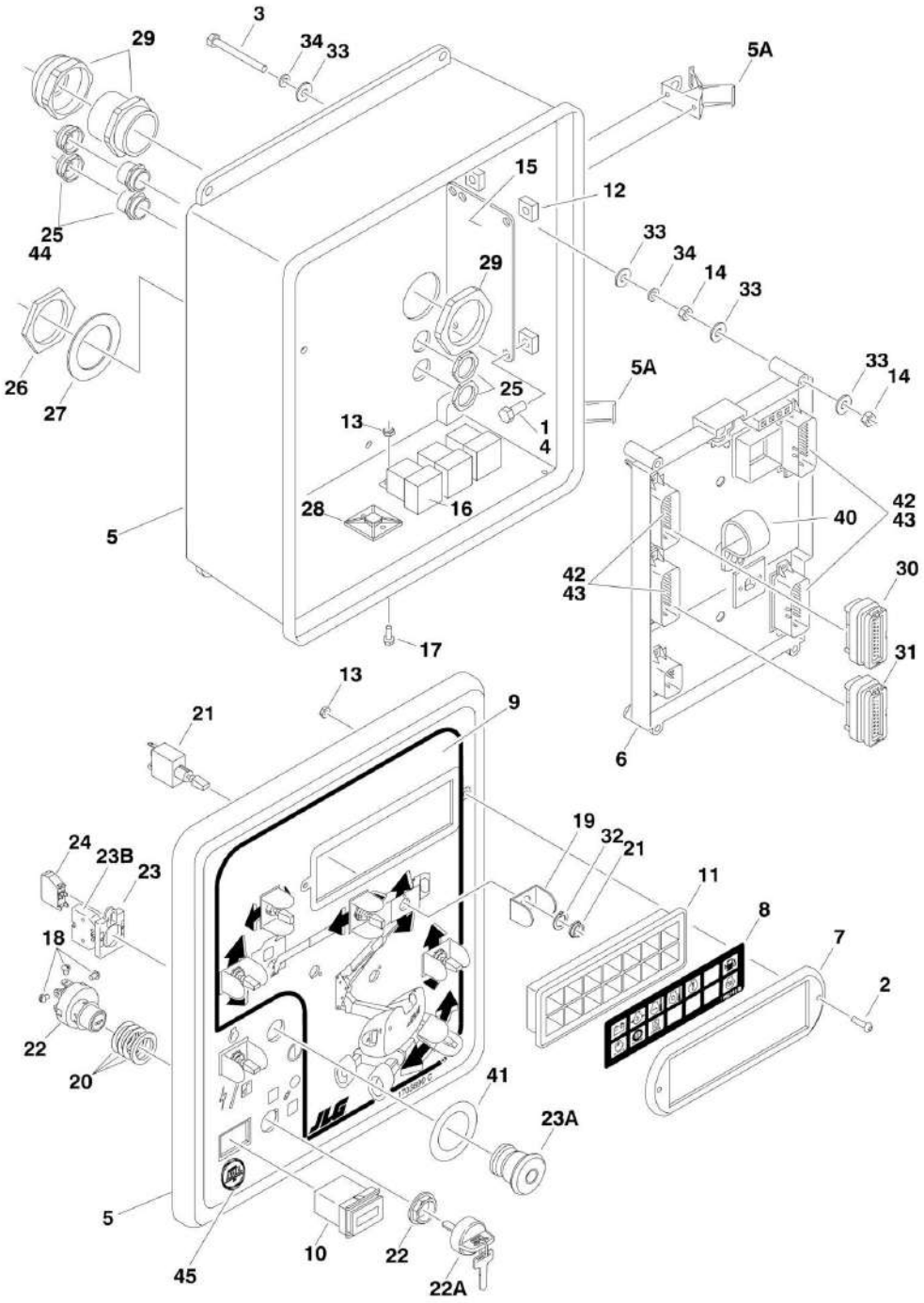

FIGURE 2-27. GROUND CONTROL BOX ASSEMBLY

ITEM	PART NUMBER	QTY	DESCRIPTION	REV
		Ref	**GROUND CONTROL BOX ASSEMBLIES**	
		Ref	**450A Series II**	
		Ref	**CÀTERPILLAR ENGINE MACHINES**	
		Ref	**USA Built Machines (SN 0300065080 through 0300087630)**	
	0861595	Ref	**ANSI, ANSI Export and CSA Specs**	B
	0861597	Ref	**Australian and CE Specs**	C
		Ref	**USA Built Machines (SN 0300087631 through 0300099084)**	
	0861728	Ref	**ANSI, ANSI Export and CSA Specs**	C
	No Longer Available	NLA	**Australian and CE Specs**	
		Ref	**USA Built Machines (SN 0300099085 through 0300123999)**	
	1810121	Ref	**ANSI, ANSI Export and CSA Specs**	A
	No Longer Available	NLA	**Australian and CE Specs**	
		Ref	**Belgium Built Machines (Prior to SN 1300001008)**	
	0861595	Ref	**ANSI, ANSI Export and CSA Specs**	B
	0861597	Ref	**Australian and CE Specs**	C
		Ref	**Belgium Built Machines (SN 1300001008 through 1300002603)**	
	0861728	Ref	**ANSI, ANSI Export and CSA Specs**	C
	No Longer Available	NLA	**Australian and CE Specs**	
		Ref	**Belgium Built Machines (SN 1300002604 through 1300006000)**	
	1810121	Ref	**ANSI, ANSI Export and CSA Specs**	A
	No Longer Available	NLA	**Australian and CE Specs**	
		Ref	**450AJ Series II**	
		Ref	**CÀTERPILLAR ENGINE MACHINES:**	
		Ref	**USA Built Machines (SN 0300065080 through 0300087630)**	
	0861596	Ref	**ANSI, ANSI Export and CSA Specs**	B
	0861598	Ref	**Australian and CE Specs**	D
		Ref	**USA Built Machines (SN 0300087631 through 0300099084)**	
	0861729	Ref	**ANSI, ANSI Export and CSA Specs**	D
	No Longer Available	NLA	**Australian and CE Specs**	
		Ref	**USA Built Machines (SN 0300099085 through 0300123999)**	
	1810125	Ref	**ANSI, ANSI Export and CSA Specs**	A
	No Longer Available	NLA	**Australian and CE Specs**	
		Ref	**Belgium Built Machines (Prior to SN 1300001008)**	
	0861596	Ref	**ANSI, ANSI Export and CSA Specs**	B
	0861598	Ref	**Australian and CE Specs**	D
		Ref	**Belgium Built Machines (SN 1300001008 through 1300002603)**	
	0861729	Ref	**ANSI, ANSI Export and CSA Specs**	D
	No Longer Available	NLA	**Australian and CE Specs**	
		Ref	**Belgium Built Machines (SN 1300002604 through 1300006000)**	
	1810125	Ref	**ANSI, ANSI Export and CSA Specs**	A
	No Longer	NLA	**Australian and CE Specs**	

SECTION 2 - TURNTABLE

ITEM	PART NUMBER	QTY	DESCRIPTION	REV
	Available			
		Ref	**450A Series II**	
		Ref	**DEUTZ ENGINE MACHINES**	
		Ref	**USA Built Machines (SN 0300065080 through 0300085628)**	
	0861422	Ref	**ANSI, ANSI Export and CSA Specs**	K
	0861427	Ref	**Australian and CE Specs**	L
		Ref	**USA Built Machines (SN 0300085629 through 0300099084)**	
	0861740	Ref	**ANSI, ANSI Export and CSA Specs**	B
	0861742	Ref	**Australian and CE Specs**	B
		Ref	**USA Built Machines (SN 0300099085 through 0300123999)**	
	1810119	Ref	**ANSI, ANSI Export and CSA Specs**	A
	1810120	Ref	**Australian and CE Specs**	A
		Ref	**Belgium Built Machines (Prior to SN 1300000979)**	
	0861422	Ref	**ANSI, ANSI Export and CSA Specs**	K
	0861427	Ref	**Australian and CE Specs**	L
		Ref	**Belgium Built Machines (SN 1300000979 through 1300002604)**	
	0861740	Ref	**ANSI, ANSI Export and CSA Specs**	B
	0861742	Ref	**Australian and CE Specs**	B
		Ref	**Belgium Built Machines (SN 1300002605 through 1300006000)**	
	1810119	Ref	**ANSI, ANSI Export and CSA Specs**	A
	1810120	Ref	**Australian and CE Specs**	A
		Ref	**450AJ Series II**	
		Ref	**DEUTZ ENGINE MACHINES:**	
		Ref	**USA Built Machines (SN 0300065080 through 0300085628)**	
	0861423	Ref	**ANSI, ANSI Export and CSA Specs**	L
	0861428	Ref	**Australian and CE Specs**	N
		Ref	**USA Built Machines (SN 0300085629 through 0300099084)**	
	0861741	Ref	**ANSI, ANSI Export and CSA Specs**	C
	0861743	Ref	**Australian and CE Specs**	C
		Ref	**USA Built Machines (SN 0300099085 through 0300123999)**	
	1810123	Ref	**ANSI, ANSI Export and CSA Specs**	A
	1810124	Ref	**Australian and CE Specs**	A
		Ref	**Belgium Built Machines (Prior to SN 1300000979)**	
	0861423	Ref	**ANSI, ANSI Export and CSA Specs**	A
	0861428	Ref	**Australian and CE Specs**	L
		Ref	**Belgium Built Machines (SN 1300000979 through 1300002604)**	
	0861741	Ref	**ANSI, ANSI Export and CSA Specs**	B
	0861743	Ref	**Australian and CE Specs**	B
		Ref	**Belgium Built Machines (SN 1300002605 through 1300006000)**	
	1810123	Ref	**ANSI, ANSI Export and CSA Specs**	A
	1810124	Ref	**Australian and CE Specs**	A
		Ref	**450A Series II**	
		Ref	**FORD ENGINE MACHINES**	
	0861420	Ref	**USA Built Machines (SN 0300065080 through 0300087630)**	J
	0861726	Ref	**USA Built Machines (SN 0300087631 through 0300123999)**	A
		Ref	**450A Series II**	
		Ref	**Ford Engine Machines**	
	0861421	Ref	**USA Built Machines (SN 0300065080 through 0300087630)**	K
	0861727	Ref	**USA Built Machines (SN 0300087631 through 0300123999)**	A
		Ref	**450A Series II**	

ITEM	PART NUMBER	QTY	DESCRIPTION	REV
		Ref	**GM ENGINE MACHINES**	
	0861769	Ref	**USA Built Machines (SN 0300065080 through 0300099084)**	C
	1810118	Ref	**USA Built Machines (SN 0300099085 through 0300123999)**	B
		Ref	**450AJ Series II**	
		Ref	**GM ENGINE MACHINES**	
	0861770	Ref	**USA Built Machines (SN 0300065080 through 0300099084)**	C
	1810122	Ref	**USA Built Machines (SN 0300099085 through 0300123999)**	B
		Ref	**450A Series II**	
		Ref	**PERKINS ENGINE MACHINES**	
	1810121	Ref	**ANSI, ANSI Export and CSA Specs**	C
	1001096954	Ref	**Australian and CE Specs**	C
		Ref	**450AJ Series II**	
		Ref	**PERKINS ENGINE MACHINES**	
	1810125	Ref	**ANSI, ANSI Export and CSA Specs**	C
	1001096956	Ref	**Australian and CE Specs**	C
1	0100011	AR	Compound, Locking	
2	0630518	2	Screw, Button Head	
3	0630548	5	Bolt	
4	0641506	4	Bolt 5/16in-18NC x 3/4in	
5	0861419	1	Box, Fiberglass	
5A	7020246	2	Latch	
6		Ref	Module, Control Options (Re-calibration Required When Replaced):	
6		Ref	USA Built Machines:	
	Note	1	**(Note: 2915239 is an Update Kit. Includes Module, Cables, Programming Instructions & CD Software.)**	
6	1600327	NLA	USA Built Machines (Use p/n 2915239) (All Machines) **(SN 0300065080 through 0300077554)**	
6	2915014	NLA	USA Built Machines (Use p/n 2915239) (All Machines) **(SN 0300065080 through 0300077554)**	
	1600364	NLA	USA Built Machines (Use p/n 2915239) All Machines **(SN 0300077555 through 0300085628)**	
	1600364	NLA	USA Built Machines (Use p/n 2915239) Caterpillar/Ford/Perkins Engines **(SN 0300085629 through 0300123999)**	
6	1600411	1	USA Built Machines (Deutz/GM Engines) **(SN 0300085629 through 0300123999)**	
6		Ref	Belgium Built Machines:	
	Note	1	**(Note: 2915239 is an Update Kit. Includes Module, Cables, Programming Instructions & CD Software.)**	
	1600327	NLA	Belgium Built Machines (Use p/n 2915239) (All Machines) **(Prior to SN 1300000353)**	
	2915014	NLA	Belgium Built Machines (Use p/n 2915239) (All Machines) **(Prior to SN 1300000353)**	
	1600364	NLA	Belgium Built Machines (Use p/n 2915239) (All Machines) **(SN 1300000353 through 1300000978)**	
	1600364	NLA	Belgium Built Machines (Use p/n 2915239) Caterpillar/Perkins Engines **(SN 1300000979 through 1300006000)**	
	1600411	1	**SN 1300000979 through 1300006000** (Deutz/GM Engines)	
7	1670829	1	Bezel	
8		Ref	Decal - Ground Control Display	
8		Ref	ANSI/ANSI Export/CSA Specs	
8		Ref	Caterpillar/Ford/Perkins Engine Machines	

SECTION 2 - TURNTABLE

ITEM	PART NUMBER	QTY	DESCRIPTION	REV
8	1702610	1	USA Built Machines **(SN 0300065080 through 0300087630)**	
8	1705753	1	USA Built Machines **(SN 0300087631 through 0300099084)**	
8	1706712	1	USA Built Machines **(SN 0300099085 through 0300123999)**	
	1702610	1	Belgium Built Machines **(Prior to SN 1300001008)**	
	1705753	1	Belgium Built Machines **(SN 1300001008 through 1300002603)**	
	1706712	1	Belgium Built Machines **(SN 1300002604 through 1300006000)**	
8		Ref	Deutz Engine Machines	
	1702610	1	USA Built Machines **(SN 0300065080 through 0300085628)**	
	1705753	1	USA Built Machines **(SN 0300085629 through 0300099084)**	
	1706712	1	USA Built Machines **(SN 0300099085 through 0300123999)**	
	1702610	1	Belgium Built Machines **(Prior to SN 1300000981)**	
	1705753	1	Belgium Built Machines **(SN 1300000981 through 1300002603)**	
	1705753	1	Belgium Built Machines **(SN 1300002604 through 1300006000)**	
8		Ref	GM Engine Machines	
8	1705753	1	GM Engine Machines **(SN 0300065080 through 0300099084)**	
8	1706712	1	GM Engine Machines **(SN 0300099085 through 0300123999)**	
8		Ref	CE/Australian Specs	
	1702610	1	USA Built Machines **(SN 0300065080 through 0300072446)**	
8	1705752	1	USA Built Machines **(SN 0300072447 through 0300085628)**	
	1705752	NLA	USA Built Machines (450AJ Series II Use p/n 1705753) **(SN 0300085629 through 0300099084)**	
	1706712	1	USA Built Machines **(SN 0300099085 through 0300123999)**	
	1705752	1	Belgium Built Machines (All Machines) **(Prior to SN 1300000979)**	
	1705752	NLA	Belgium Built Machines (450AJ Series II Use p/n 1705753) **(SN 1300000979 through 1300002603)**	
	1706712	1	Belgium Built Machines **(SN 1300002604 through 1300006000)**	
9		Ref	Decal - Faceplate	
9		Ref	450A Series II:	
9	1703690	1	USA Built Machines **(SN 0300065080 through 0300099084)**	
9	1706920	1	USA Built Machines **(SN 0300099085 through 0300123999)**	
9	1703690	1	Belgium Built Machines **(Prior to SN 1300002604)**	
9	1706920	1	Belgium Built Machines **(SN 1300002604 through 1300006000)**	
9		Ref	450AJ Series II:	
9	1703691	1	USA Built Machines **(SN 0300065080 through 0300099084)**	
9	1706921	1	USA Built Machines **(SN 0300099085 through 0300123999)**	
9	1703691	1	Belgium Built Machines **(Prior to SN 1300002604)**	
9	1706921	1	Belgium Built Machines **(SN 1300002604 through 1300006000)**	

ITEM	PART NUMBER	QTY	DESCRIPTION	REV
10	2420172	1	Gauge, Hourmeter	
11	2760105	1	Housing, Display Light	
12	3300205	4	Nut, Retainer	
13	3300408	AR	Locknut, Plastic Insert	
14	3311401	10	Nut 1/4in-20NC	
15	3539219	1	Plate, Reinforcement	
16	3740049	AR	Relay - SPDT	
17	3900268	AR	Screw #10-24NC x 1/2in	
18	3910804	6	Screw #8-32NC x 1/4in	
19	4060906	AR	Shield, Toggle Switch	
20	4070991	NLA	Shim (.015) (Use p/n 4070987)	
21	4360328	AR	Switch, Toggle	
22		Ref	Switch, Key Options:	
22	4360469	1	ANSI/ANSI Export/CSA Specs	
22	4360470	1	CE/Australian Specs	
22A	2860030	1	Key	
23	4360475	1	Switch, Emergency Stop	
23A	7020175	1	Cap, Mushroom Head	
23B	7020176	1	Block, Contact	
24	4360476	1	Switch, Contact Block	
25	4460426	AR	Connector, Strain Relief	
26	4460470	1	Nut, Terminal	
27	4460471	1	Locknut, Terminal	
28	4460488	11	Base, Terminal Mounting	
29	4460526	1	Connector, Strain Relief	
30	4460874	1	Connector (Natural)	
31	4460875	1	Connector (Gray)	
32	4740444	AR	Washer, Special	
33	4751400	21	Flatwasher 1/4in Regular	
34	4761400	10	Lockwasher 1/4in	
35	4922666	1	Cable, Analyzer (Not Shown - See ELECTRICAL SECTION for Breakdown) (Part of Ground Control Box Harness on USA Built Machines) **(SN 0300099085 through 0300123999)**	
35	4922666	1	Cable, Analyzer (Not Shown - See ELECTRICAL SECTION for Breakdown) (Part of Ground Control Box Harness on Belgium Built Machines) **(SN 1300002604 through 1300006000)**	
36		Ref	Ground Control Box Harness Assembly Options (Not Shown - See ELECTRICAL SECTION for Breakdown):	
36		Ref	Caterpillar Engines:	
36	4922638	1	USA Built Machines **(SN 0300065080 through 0300087630)**	
36	4923455	1	USA Built Machines **(SN 0300087631 through 0300099084)**	
36	4923575	1	USA Built Machines **(SN 0300099085 through 0300123999)**	
36	4922638	1	Belgium Built Machines **(Prior to SN 1300001008)**	
36	4923455	1	Belgium Built Machines **(SN 1300001008 through 1300002603)**	
36	4923575	1	Belgium Built Machines **(SN 1300002604 through 1300006000)**	
36		Ref	Deutz Engines:	
36	4922638	1	USA Built Machines **(SN 0300065080 through 0300085628)**	
36	4923223	1	USA Built Machines **(SN 0300085629 through 0300099084)**	
36	4923575	1	USA Built Machines **(SN 0300099085 through 0300123999)**	
36	4922638	1	Belgium Built Machines **(Prior to SN 1300000979)**	
36	4923223	1	Belgium Built Machines **(SN 1300000979 through**	

ITEM	PART NUMBER	QTY	DESCRIPTION	REV
			1300002603)	
36	4923575	1	Belgium Built Machines **(SN 1300002604 through 1300006000)**	
36		Ref	Ford Engines:	
36	4922638	1	Ford Engines **(SN 0300065080 through 0300087630)**	
36	4923231	1	Ford Engines **(SN 0300087631 through 0300099084)**	
36	4923575	1	Ford Engines **(SN 0300099085 through 0300123999)**	
36		Ref	GM Engines:	
36	4923223	1	GM Engines **(SN 0300065080 through 0300099084)**	
36	4923575	1	GM Engines **(SN 0300099085 through 0300123999)**	
36	4923575	1	Perkins Engines (All Machines)	
37		Ref	Engine Harness Assembly (Not Shown - See ELECTRICAL SECTION for Breakdown)	
37		Ref	Caterpillar/Perkins Engine Machines	
37	4922881	1	USA Built Machines **(SN 0300065080 through 0300087630)**	
37	4923252	1	USA Built Machines **(SN 0300087631 through 0300093619)**	
37	4923357	1	USA Built Machines **(SN 0300093620 through 0300099084)**	
37	4923581	1	USA Built Machines **(SN 0300099085 through 0300119210)**	
37	1001098840	1	USA Built Machines **(SN 0300119211 through 0300123999)**	
37	4922881	1	Belgium Built Machines **(Prior to SN 1300001008)**	
37	4923252	1	Belgium Built Machines **(SN 1300001008 through 1300001426)**	
37	4923357	1	Belgium Built Machines **(SN 1300001427 through 1300002603)**	
37	4923581	1	Belgium Built Machines **(SN 1300002604 through 1300005189)**	
37	1001098840	1	Belgium Built Machines **(SN 1300005190 through 1300006000)**	
37		Ref	Deutz Engine Machines	
37	4922522	1	USA Built Machines **(SN 0300065080 through 0300085628)**	
37	4923265	1	USA Built Machines **(SN 0300085629 through 0300123999)**	
37	4922522	1	Belgium Built Machines **(Prior to SN 1300000979)**	
37	4923265	1	Belgium Built Machines **(SN 1300000979 through 1300006000)**	
37		Ref	Ford Engine Machines	
37	4922521	1	Ford Engine Machines **(SN 0300065080 through 0300087630)**	
37	4923251	1	Ford Engine Machines **(SN 0300087631 through 0300123999)**	
37	4923395	1	GM Engine Machines	
38	4922523	1	Valve Harness Assembly (Not Shown - See ELECTRICAL SECTION for Breakdown)	
40	1320060	1	Clamp, Hose	
41	1704260	1	Decal - Emergency Stop (USA Built Machines Only) **(SN 0300065080 through 0300064705)**	
42	0100048	AR	Grease, Dielectric	
43	4460905	4	Seal, Plug	
44	3520035	1	Plug (USA Built Machines) **(SN 0300064708 through 0300123999)**	
44	3520035	1	Plug (Belgium Built Machines) **(SN 1300000001 through 1300006000)**	
45	1705132	1	Decal - ADE Control (USA Built Machines) **(SN 0300064708 through 0300123999)**	
45	1705132	1	Decal - ADE Control (Belgium Built Machines)	

FIGURE 2-28. ELECTRICAL OPTIONS INSTALLATION (TURNTABLE MOUNTED)

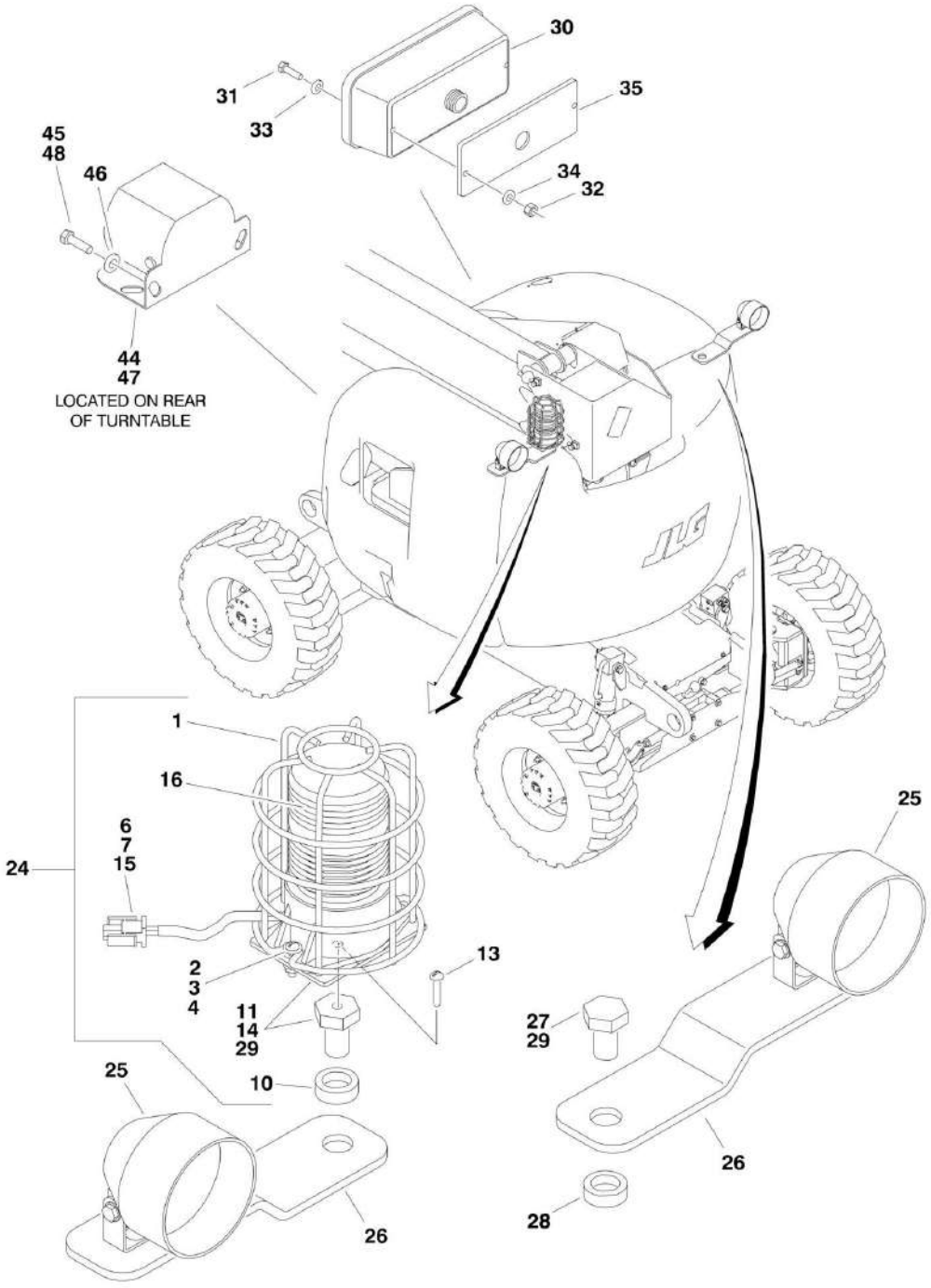

FIGURE 2-28. ELECTRICAL OPTIONS INSTALLATION (TURNTABLE MOUNTED)

ITEM	PART NUMBER	QTY	DESCRIPTION	REV
	0271073	Ref	**STROBE LIGHT INSTALLATION (AMBER) (OPTIONAL)**	3
		Ref	**Note: If machine is equipped with BLUE Strobe Light, see SPECIAL OPTIONS SECTION SkyGuard Kit**	
1	4060865	1	Guard	
2	3911014	2	Screw, Machine #10-24NC x 7/8in	
3	4751000	4	Flatwasher #10 Regular	
4	3311001	2	Nut #10-24NC	
5	2820035	12 ft/31cm	Loom (Not Shown)	
6	4460320	1	Plug, Terminal (USA Built Machines) **(SN 0300065080 through 0300083248)**	
6	4460320	1	Plug Terminal (Belgium Built Machines) **(Prior to SN 1300000707)**	
7	4460267	2	Pin, Male (USA Built Machines) **(SN 0300065080 through 0300083248)**	
7	4460267	2	Pin, Male (Belgium Built Machines) **(Prior to SN 1300000707)**	
8	4240032	1	Tie Strap (Not Shown)	
9	4460234	1	Clamp (Not Shown)	
10	4220162	1	Spacer, Stop	
11	4846698	1	Mounting, Light	
14	0100011	AR	Compound, Locking	
15	0100048	AR	Grease, Dielectric	
16	2920146	NLA	Strobe Light Assembly (Use p/n 0272529)	
16	7016319	1	Bulb, Replacement	
16	7016372	1	Lens	
24	0272529	1	Strobe Light Kit (Includes Items 1-7, 10, 11 & 16)	
		Ref	**LIGHTS INSTALLATIONS (OPTIONAL)**	
	0271072	Ref	**Headlights and Taillights**	2
	0272057	Ref	**Chassis Floodlights (Not Shown)**	1-A
25		Ref	Light Options:	
25	2920110	2	Headlight (Round Shape)	
25	7016628	2	Bulb, Light (1 Per Light)	
25	2920157	2	Floodlight (Rectangular Shape)	
26	0902206	2	Bracket, Mounting	
27	0642612	1	Bolt 1in-8NC x 1-1/2in	
28	4220162	2	Spacer	
29	0100011	AR	Compound, Locking	
30		Ref	Light Options:	
30	2920113	2	Taillight	
30	2920157	2	Floodlight (Rectangular Shape)	
31	3911040	4	Screw, Machine #10-24NC x 2-1/2in (0271072 Installation)	
32	3311005	4	Nut #10-24NC (0271072 Installation Only)	
33	4751000	4	Flatwasher #10 Regular (0271072 Installation Only)	
34		Ref	Washer Options:	
34	4740362	4	Headlights & Taillights	
34	4751800	4	Chassis Floodlights	
35	3960461	2	Gasket (0271072 Installation Only)	
37	4240032	12	Tie-Strap (Not Shown)	
38	4460234	12	Mount, Tie-Strap (Not Shown)	
39	4360336	1	Switch, Toggle (Not Shown - Located on Console)	
40	3790012	1	O-Ring (Not Shown - Located on Console)	

SECTION 2 - TURNTABLE

ITEM	PART NUMBER	QTY	DESCRIPTION	REV
	0271217	Ref	**ALARM INSTALLATION**	1
44	0257887	1	Alarm/Harness Assembly	
44	0140032	1	Alarm	
44	2820035	AR	Loom	
44	4460424	1	Plug	
44	4460268	2	Socket	
45	0641407	2	Bolt 1/4in-20NC x 3/4in	
46	4711400	2	Flatwasher 1/4in Thin	
47	0100048	AR	Grease, Dielectric	
48	0100011	AR	Compound, Locking	

FIGURE 2-29. HOODS INSTALLATION

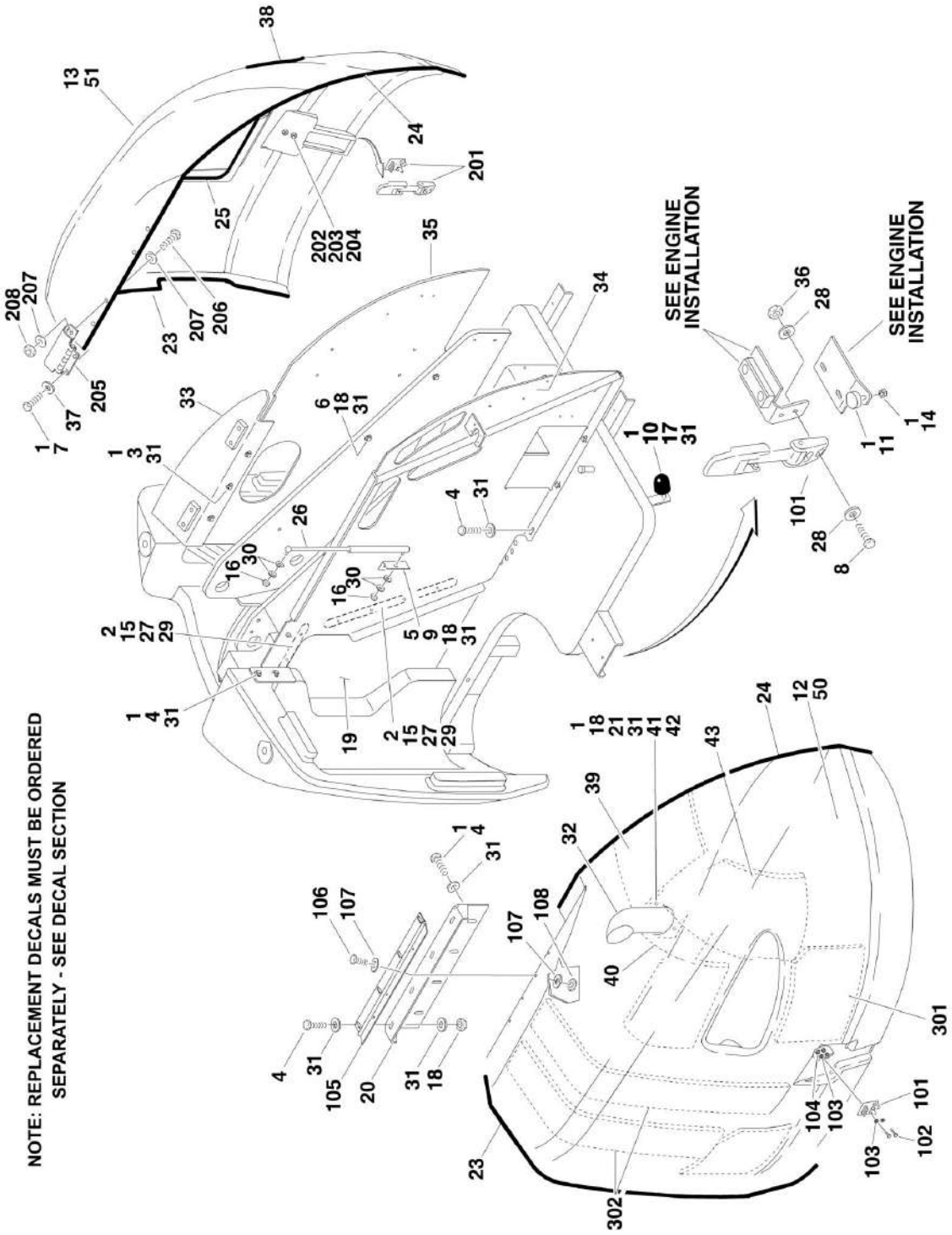

FIGURE 2-29. HOODS INSTALLATION

ITEM	PART NUMBER	QTY	DESCRIPTION	REV
		Ref	**HOODS INSTALLATION**	
		Ref	**Caterpillar/Perkins Engine Machines**	
	0271209	Ref	**USA Built Machines (SN 0300065080 through 0300107511)**	G
	0275866	Ref	**USA Built Machines (SN 0300107512 through 0300123999)**	C
	0271209	1	**Belgium Built Machines (Prior to SN 1300003222)**	G
	0275866	1	**Belgium Built Machines (SN 1300003222 through 1300006000)**	C
		Ref	**Deutz Engine Machines**	
	0271209	1	**USA Built Machines (SN 0300065080 through 0300107511)**	G
	0275866	1	**USA Built Machines (SN 0300107512 through 0300123999)**	C
	0271209	1	**Belgium Built Machines (Prior to SN 1300003222)**	G
	1001091079	Ref	**Belgium Built Machines (SN 1300003222 through 1300006000)**	C
		Ref	**Ford Engine Machines Options:**	
	0271210	Ref	**Ford Engine Machines (SN 0300065080 through 0300078472)**	D
	0274020	Ref	**Ford Engine Machines (SN 0300078473 through 0300123999)**	B
		Ref	**GM Engine Machines**	
	0275033	Ref	**GM Engine Machines (SN 0300065080 through 0300107511)**	C
	0275868	Ref	**GM Engine Machines (SN 0300107512 through 0300123999)**	A
1	0100011	AR	Compound, Locking	
2	0641408	6	Bolt 1/4in-20NC x 1-1/4in	
3	0641606	3	Bolt 3/8in-16NC x 3/4in	
4	0641608	13	Bolt 3/8in-16NC x 1in	
5	0641610	2	Bolt 3/8in-16NC x 1-1/4in	
6	0641614	4	Bolt 3/8in-16NC x 1-3/4in	
7	0721004	4	Bolt #10-24NC x 1/2in	
8	0721006	4	Bolt #10-24NC x 3/4in	
9	0902504	1	Angle, Mounting	
10	0940071	1	Bumper	
11	0940083	2	Bumper	
12	See Note	1	Hood (Engine Side) (See Items 101-108 for Breakdown) (was p/ns 2680438 & 1671169) (Note: Use Item 50)	
13	See Note	1	Hood (Tank Side) (See Items 201-208 for Breakdown) (was p/n 2680439) (Note: Use Item 51)	
14	3311401	2	Nut 1/4in-20NC	
15	3311405	6	Locknut 1/4in-20NC	
16	3311505	2	Nut 5/16in - 18NC	
17	3311601	5	Nut 3/8in-16NC	
18	3311605	10	Locknut 3/8in-16NC	
19	3380445	1	Panel, Rubber	
20	3573024	1	Plate, Hinge Mounting	
21	3900232	3	Capscrew, Button Head 3/8in-16NC 1-1/4in	
23	3960462	9 ft/2.74m	Seal, Hood	
24	3960464	9 ft/2.74m	Seal, Hood	
26	4160170	1	Spring, Gas	
27	4740362	6	Washer, Fender	
28	4750800	12	Flatwasher #8 Regular	
29	4751400	6	Flatwasher 1/4in Regular	
30	4751500	4	Flatwasher 5/16in Regular	
31	4751600	40	Flatwasher 3/8in Regular	

ITEM	PART NUMBER	QTY	DESCRIPTION	REV
32		Ref	Exhaust Tube Weldment Options:	
32	4845194	1	Caterpillar/Deutz/Perkins Engine Machines	
32	4845194	1	Ford Engine Machines **(SN 0300065080 through 0300078472)**	
32	3460373	1	Ford Engine Machines **(SN 0300078473 through 0300123999)**	
32	3460373	1	GM Engine Machines	
33	4846037	1	Hood Mounting Weldment	
34		Ref	Hood Mounting Weldment Options:	
34	4845665	NLA	Caterpillar/Deutz Engine - USA Built Machines (Use p/n 4341390) **(SN 0300065080 through 0300107511)**	
34	4845665	NLA	Caterpillar/Deutz Engine - Belgium Built Machines (Use p/n 4341390) **(Prior to SN 1300003222)**	
34	4341390	1	Caterpillar/Deutz/Perkins Engine - USA Built Machines **(SN 0300107512 through 0300123999)**	
34	4341390	1	Caterpillar/Deutz/Perkins Engine - Belgium Built Machines **(SN 1300003222 through 1300006000)**	
	4845665	NLA	Ford Engine Machines (Use p/n 4341390)	
34	4341177	NLA	GM Engine Machines (Use p/n 4341389) **(SN 0300065080 through 0300107511)**	
34	4341389	1	GM Engine Machines **(SN 0300107512 through 0300123999)**	
35	4846424	1	Hood Mounting Weldment	
36	3311005	4	Locknut #10-24NC	
37	4751000	8	Flatwasher #10 Regular	
38	4060805	6 ft/1.75m	Flex-Trim	
39		Ref	Insulation, Heat Shield Options:	
39	1001098567	1	Caterpillar/Perkins Engine Machines	
39	Not Required	0	Deutz Engine Machines	
39	Not Required	0	Ford Engine Machines **(SN 0300065080 through 0300078472)**	
39	2820176	1	Ford Engine Machines **(SN 0300078473 through 0300123999)**	
39	2820176	1	GM Engine Machines	
40		Ref	Insulation, Heat Shield Options:	
40	1001098567	1	Caterpillar/Perkins Engine Machines	
40	Not Required	0	Deutz Engine Machines	
40	Not Required	0	Ford Engine Machines **(SN 0300065080 through 0300078472)**	
40	2820177	1	Ford Engine Machines **(SN 0300078473 through 0300123999)**	
40	2820177	1	GM Engine Machines	
41	4740500	3	Washer, Special (Not Required on Deutz Engine Machines)	
42	4061010	1	Shield, Heat (Not Required on Deutz Engine Machines)	
43		Ref	Insulation, Heat Shield Options:	
43	1001098568	1	Caterpillar/Perkins Engine Machines	
43	Not Required	0	Deutz Engine Machines	
43	2820130	1	Ford Engine Machines **(SN 0300065080 through 0300078472)**	
43	2820175	1	Ford Engine Machines **(SN 0300078473 through 0300123999)**	
43	2820175	1	GM Engine Machines	
50		Ref	Hood Kit (Engine Side) Options:	
		Ref	**Note: Replacement Decals Must be Ordered Separately - See DECAL SECTION.**	

ITEM	PART NUMBER	QTY	DESCRIPTION	REV
50	1001091093	1	Caterpillar/Perkins Engine USA Built Machines (Includes items 12, 23, 24, 32c)	
50	1001101160	1	Caterpillar/Perkins Engine Belgium Built Machines (Includes items 12, 23, 24 and Current Heat Shields)	
		Ref	**(Note: Item 32 must be ordered separately)**	
50	1001091124	1	Deutz Engine Machines (Includes items 12, 23, 24, 32 and Current Heat Shields)	
50	1001097968	1	Ford Engine Machines (Includes Items 12 and Current Heat Shields) (Note: Item 32 must be ordered separately)	
50	1001091094	1	GM Engine Machines (Includes items 12, 23, 24, 32 & Current Heat Shields)	
51	1001091125	1	Hood Kit (Tank Side) (Includes items 13, 23, 24, 38 & 201-208)	
		Ref	**Note: Replacement Decals Must be Ordered Separately - See DECAL SECTION.**	
		Ref	**HOOD ASSEMBLY OPTIONS (ENGINE SIDE):**	
101	2940109	1	Latch	
102	0721008	2	Screw, Machine #10-24NC x 1in	
103	4751000	4	Flatwasher #10 Regular	
104	3311005	2	Locknut #10-24NC	
105	2600210	1	Hinge	
106	3900232	4	Screw, Button Head 3/8in-16NC x 1-1/4in	
107	4751600	8	Flatwasher 3/8in Regular	
108	3311605	4	Locknut 3/8in-16NC	
		Ref	**HOOD ASSEMBLY (TANK SIDE)**	M
201	2940109	1	Latch	
202	0721008	2	Screw, Machine #10-24NC x 1in	
203	4751000	4	Flatwasher #10 Regular	
204	3311005	2	Locknut #10-24NC	
205	2600246	2	Hinge	
206	0721006	4	Screw, Machine #10-24NC x 3/4in	
207	4751000	8	Flatwasher #10 Regular	
208	3311005	4	Locknut #10-24NC	
	0258430	Ref	**NOISE REDUCTION INSTALLATION (DEUTZ ENGINE MACHINES)**	2-B
301	2820099	3	Insulation, Foam	
302	2820100	2	Insulation, Foam	

FIGURE 2-30. 2500W GENERATOR INSTALLATION - CATERPILLAR ENGINES (USA BUILT MACHINES) (OPTIONAL)

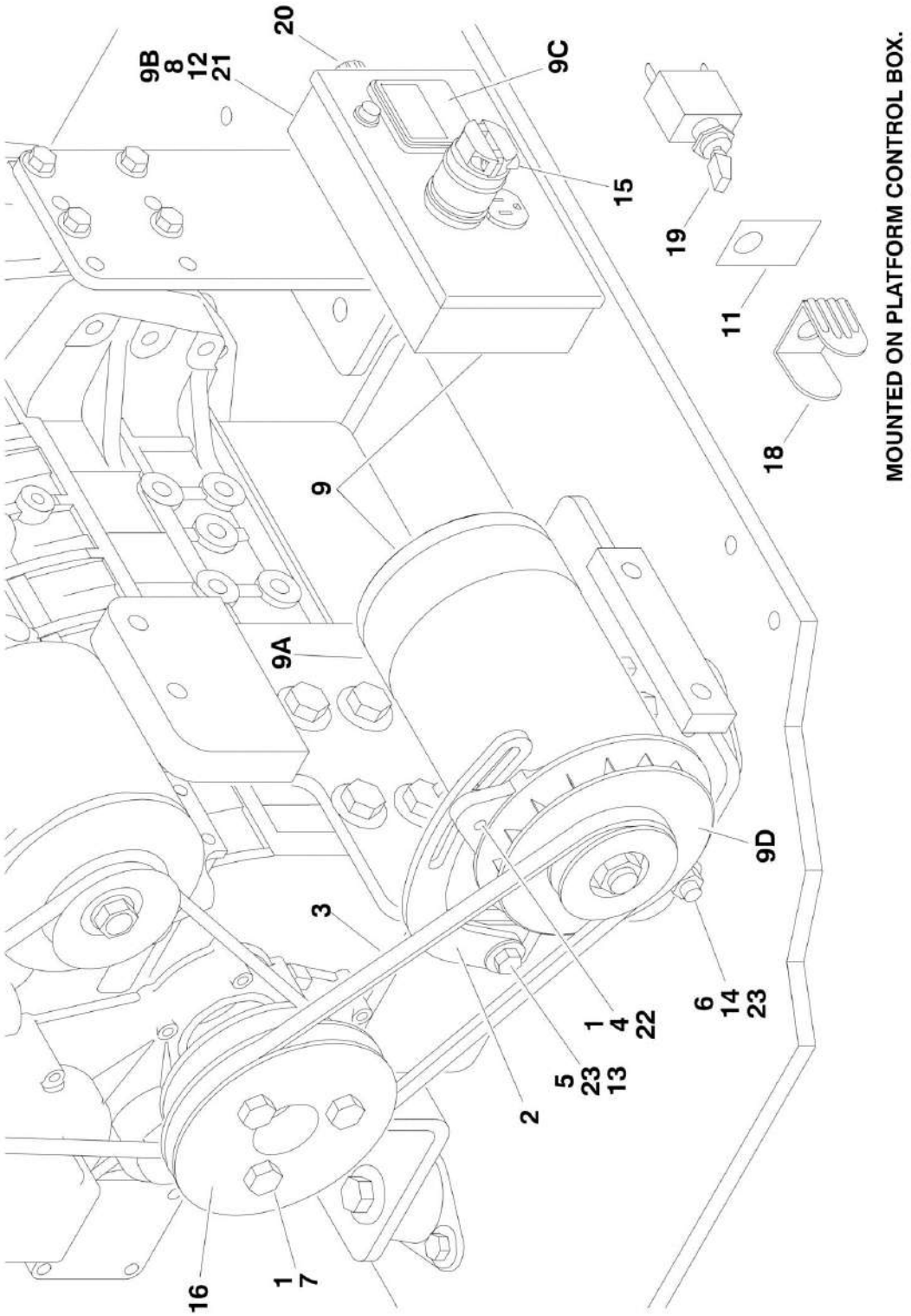

FIGURE 2-30. 2500W GENERATOR INSTALLATION - CATERPILLAR ENGINES (USA BUILT MACHINES) (OPTIONAL)

ITEM	PART NUMBER	QTY	DESCRIPTION	REV
		Ref	**GENERATOR INSTALLATION**	
		Ref	**110V/60Hz Generator (Available on all Specs Except Australian and CE Specs)**	
	0273050	Ref	**Generator (SN 0300065080 through 0300087208)**	A
	0274084	Ref	**Generator (SN 0300087209 through 0300123999)**	B
		Ref	**220V/50HZ Generator (Available on ANSI Export, Australian and CE Specs)**	
	0273051	Ref	**Generator (SN 0300065080 through 0300087208)**	A
	0274088	Ref	**Generator (SN 0300087209 through 0300123999)**	A
1	0100011	AR	Compound, Locking	
2	0200742	1	Arm, Adjusting	
3		Ref	V-Belt Options:	
3	0480122	1	V-Belt (110V) **(SN 0300065080 through 0300116111)**	
3	0480121	1	V-Belt (110V) **(SN 0300116112 through 0300123999)**	
3	0480120	1	V-Belt (220V)	
4	0641508	1	Bolt 5/16in-18NC x 1in	
5	0641610	1	Bolt 3/8in-16NC x 1-1/4in	
6	0641772	1	Bolt 7/16in-14NC x 9in	
7	0701217	3	Bolt M12 x 45mm	
8	0721008	2	Bolt #10-24NC x 1in	
9		Ref	Generator and Control Box Assembly Options:	
9	2460032	1	Generator and Control Box Assembly (110V/60Hz) **(SN 0300065080 through 0300087208)**	
9	2460055	1	Generator and Control Box Assembly (110V/60Hz) **(SN 0300087209 through 0300123999)**	
9	2460013	1	Generator and Control Box Assembly (220V/50Hz) **(SN 0300065080 through 0300087208)**	
9	2460056	1	Generator and Control Box Assembly (220V/50Hz) **(SN 0300087209 through 0300123999)**	
9A	7012558	1	Generator and Control Box Assembly (110V/60Hz Generator)	
9A	1001100321	1	Generator and Control Box Assembly (220V/50Hz Generator)	
		Ref	**Note: All Replacement Generators come standard with P/N 3580134 Pulley. This Pulley may not be correct for all applications. Refer to Pulley options below.**	
9A	7026199	1	Generator and Control Box Assembly (110V/60Hz Armature with Slip Rings)	
9A	70000123	1	Generator and Control Box Assembly (220V/50Hz Armature with Slip Rings)	
9A	7020109	4	Holder, Brush	
9A	7020108	4	Brush	
9A	7012513	4	Cap, Brush Holder	
9A	7012514	1	Fan	
9A	7020190	2	Bearing	
9A	7020110	1	End Bell, Front	
9A	7020111	1	End Bell, Rear	
9A	7020193	1	Cord, Power	
9B		Ref	Control Box Options:	
9B		Ref	Control Box (110V/60Hz)	
9B	7003657	1	Control Box **(SN 0300065080 through 0300087208)**	
9B	7019680	1	Control Box **(SN 0300087209 through 0300123999)**	
9B		Ref	Control Box (220V/50Hz)	

SECTION 2 - TURNTABLE

ITEM	PART NUMBER	QTY	DESCRIPTION	REV
9B	70002235	1	Control Box **(SN 0300065080 through 0300087208)**	
9B	70000127	1	Control Box **(SN 0300087209 through 0300123999)**	
9B		Ref	Circuit Breaker Options:	
9B	4360542	1	Circuit Breaker (110V/60Hz)	
9B	70000126	1	Circuit Breaker (220V/50Hz)	
9B	4460190	AR	Receptacle, Double (110V Box)	
9B	4460027	AR	Receptacle, Double Twist Lock (110V Box)	
9B	70000124	1	Receptacle, Double (220V Box)	
9B	70000125	1	Receptacle, Single Twist Lock (220V Box)	
9B	2920162	1	Lamp Assembly **(SN 0300065080 through 0300087209)**	
9B	7020191	1	Switch, Toggle **(SN 0300065080 through 0300087209)**	
9B	3520028	1	Plug, Power	
9C		Ref	Voltmeter Options:	
9C	2420203	1	Voltmeter (110V)	
9C	7020192	1	Voltmeter (220V)	
9D		Ref	Pulley Options:	
9D	3580276	1	Pulley (110V)	
9D	3580134	1	Pulley (220V)	
9D	7027887	1	Key, Woodruff	
10	2820031	1	Heat Shrink (Not Shown - Located at Platform)	
11	3251102	1	Decal (Located at Platform)	
12	3311005	2	Locknut #10-24NC	
13	3311605	1	Locknut 3/8in-16NC	
14	3311705	1	Locknut 7/16in-14NC	
15	3520028	1	Plug, Hole	
16	3580315	1	Pulley	
17	3740080	1	Relay (Not Shown - Located Back Side of Engine Tray with Existing Relays)	
18	4060802	1	Guard, Switch (Located at Platform)	
19	4360336	1	Switch, Toggle (Located at Platform)	
20	4460023	1	Connector, Strain Relief	
21	4751000	8	Flatwasher #10 Regular	
22	4751500	1	Flatwasher 5/16in Regular	
23	4751600	6	Flatwasher 3/8in Regular	

FIGURE 2-31. 2500W GENERATOR INSTALLATION - DEUTZ ENGINES (USA AND BELGIUM BUILT MACHINES) (OPTIONAL)

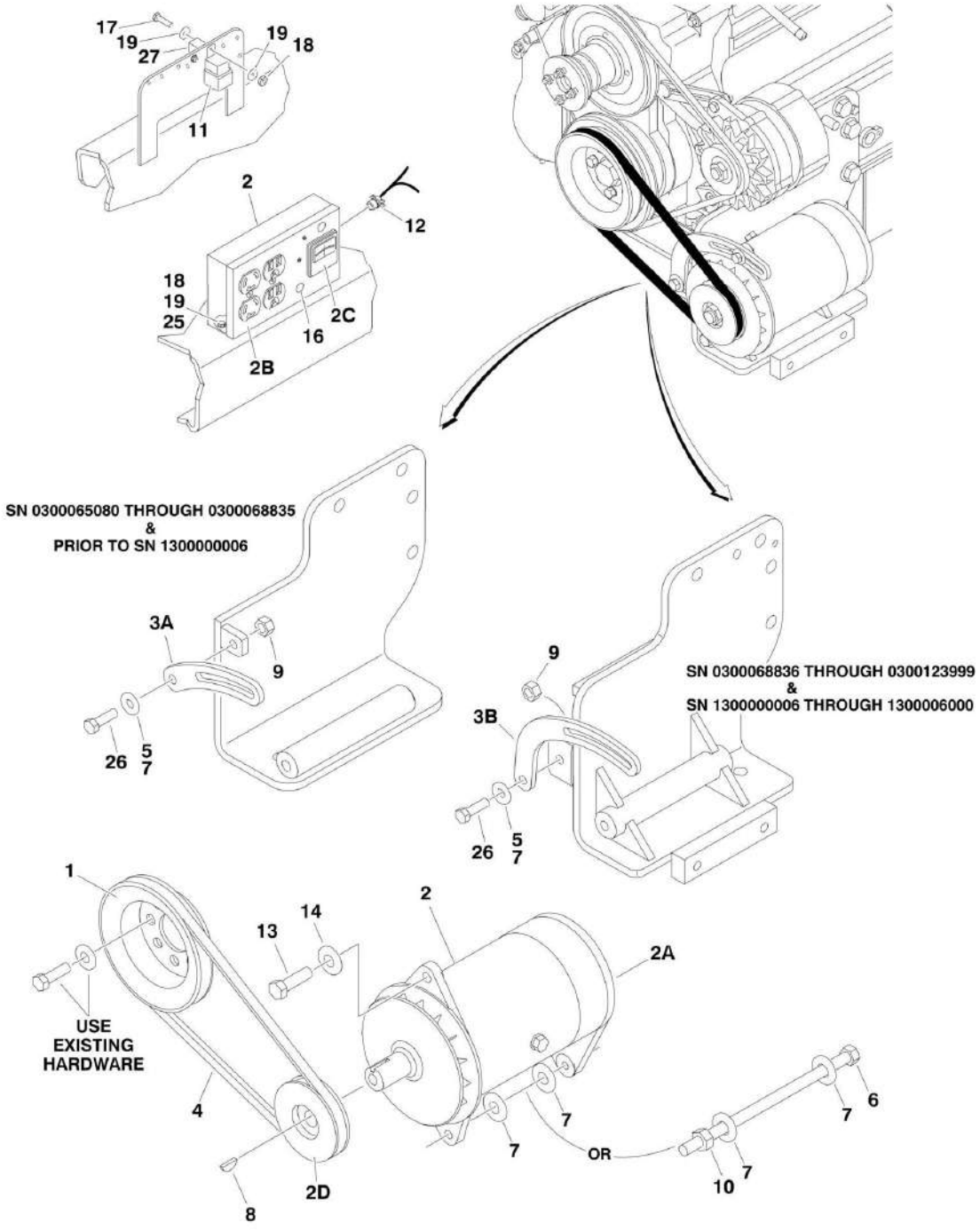

FIGURE 2-31. 2500W GENERATOR INSTALLATION - DEUTZ ENGINES (USA AND BELGIUM BUILT MACHINES) (OPTIONAL)

ITEM	PART NUMBER	QTY	DESCRIPTION	REV
		Ref	**GENERATOR INSTALLATION OPTIONS:**	
		Ref	**110V/60Hz USA Built Machines**	
	0271593	Ref	**110V/60Hz USA Built Machine (SN 0300065080 through 0300077520)**	1-A
	0272614	Ref	**110V/60Hz USA Built Machine (SN 0300077521 through 0300082708)**	3-B
	0274079	Ref	**110V/60Hz USA Built Machine (SN 0300082709 through 0300123999)**	2-B
		Ref	**110V/60Hz Belgium Built Machines**	
	0271593	Ref	**110V/60Hz Belgium Built Machine (Prior to SN 1300000316)**	1-A
	0272614	Ref	**110V/60Hz Belgium Built Machines (SN 1300000316 through 1300000730)**	3-B
	0274079	Ref	**110V/60Hz Belgium Built Machines (SN 1300000731 through 1300006000)**	2-B
		Ref	**110V/50Hz USA Built Machines**	
	0272162	Ref	**110V/50Hz USA Built Machine (SN 0300065080 through 0300077520)**	1-A
	0272616	Ref	**110V/50Hz USA Built Machine (SN 0300077521 through 0300082708)**	2-B
	0274089	Ref	**110V/50Hz USA Built Machine (SN 0300082709 through 0300123999)**	2-B
		Ref	**110V/50Hz Belgium Built Machines**	
	0272162	Ref	**110V/50Hz Belgium Built Machine (Prior to SN 1300000316)**	1-A
	0272616	Ref	**110V/50Hz Belgium Built Machine (SN 1300000316 through 1300000730)**	2-B
	0274089	Ref	**110V/50Hz Belgium Built Machine (SN 1300000731 through 1300006000)**	2-B
		Ref	**220V USA Built Machines**	
	0271594	Ref	**220V USA Built Machine (SN 0300065080 through 0300068835)**	2-A
	0272615	Ref	**220V USA Built Machine (SN 0300068836 through 0300082708)**	1-A
	0274085	Ref	**220V USA Built Machine (SN 0300082709 through 0300123999)**	2-B
		Ref	**220V Belgium Built Machines**	
	0271594	Ref	**220V Belgium Built Machine (Prior to SN 1300000316)**	2-A
	0272615	Ref	**220V Belgium Built Machine (SN 1300000316 through 1300000730)**	1-A
	0274085	Ref	**220V Belgium Built Machine (SN 1300000731 through 1300006000)**	2-B
1	3580158	1	Pulley	
2		Ref	Generator and Control Box Assembly Options:	
2		Ref	USA Built Machines:	
2	2460032	1	110V/60Hz Assembly **(SN 0300065080 through 0300082708)**	
2	2460055	1	110V/60Hz Assembly **(SN 0300082709 through 0300123999)**	
2	2460039	1	110V/50Hz Assembly **(SN 0300065080 through 0300082708)**	
2	2460057	1	110V/50Hz Assembly **(SN 0300082709 through 0300123999)**	
2	2460034	1	220/50Hz Assembly **(SN 0300065080 through 0300066784)**	
2	2460013	1	220/50Hz Assembly **(SN 0300066785 through 0300082708)**	
2	2460056	1	220/50Hz Assembly **(SN 0300082709 through 0300123999)**	
2		Ref	Belgium Built Machines:	
	2460032	1	110V/60Hz Assembly **(Prior to SN 1300000731)**	

SECTION 2 - TURNTABLE

ITEM	PART NUMBER	QTY	DESCRIPTION	REV
	2460055	1	110V/60Hz Assembly **(SN 1300000731 through 1300006000)**	
	2460039	1	110V/50Hz Assembly **(Prior to SN 1300000731)**	
	2460057	1	110V/50Hz Assembly **(SN 1300000731 through 1300006000)**	
	2460013	1	220/50Hz Assembly **(Prior to SN 1300000731)**	
	2460056	1	220/50Hz Assembly **(SN 1300000731 through 1300006000)**	
2A		Ref	Generator Options:	
2A	7012558	1	110V/60Hz Generator	
2A	2460049	1	110V/50Hz Generator	
2A	1001100321	1	220V/50Hz Generator	
		Ref	**Note: All Replacement Generators come standard with P/N 3580134 Pulley. This Pulley may not be correct for all applications. Refer to Pulley options below.**	
2A	7026199	1	110V/60Hz Armature with Slip Rings	
2A	70000122	1	110V/50Hz Armature with Slip Rings	
2A	70000123	1	220V/50Hz Armature with Slip Rings	
2A	7020109	4	Holder, Brush	
2A	7020108	4	Brush	
2A	7012513	4	Cap, Brush Holder	
2A	7012514	1	Fan	
2A	7020190	2	Bearing	
2A	7020110	1	End Bell, Front	
2A	7020111	1	End Bell, Rear	
2A	7020193	1	Cord, Power	
2B		Ref	Control Box Options:	
2B		Ref	Control Box (110V/60Hz)	
2B	7003657	1	USA Built Machines **(SN 0300065080 through 0300082708)**	
2B	7003657	1	Belgium Built Machines **(Prior to SN 1300000731)**	
2B	7019680	1	USA Built Machines **(SN 0300082709 through 0300123999)**	
2B	7019680	1	Belgium Built Machines **(SN 1300000731 through 1300006000)**	
2B		Ref	Control Box (110V/50Hz)	
2B	70002239	1	USA Built Machines **(SN 0300065080 through 0300082708)**	
2B	70002239	1	Belgium Built Machines **(Prior to SN 1300000731)**	
2B	7019680	1	USA Built Machines **(SN 0300082709 through 0300123999)**	
2B	7019680	1	Belgium Built Machines **(SN 1300000731 through 1300006000)**	
2B		Ref	Control Box (220V/50Hz)	
2B	70002235	1	USA Built Machines **(SN 0300065080 through 0300082708)**	
2B	70002235	1	Belgium Built Machines **(Prior to SN 1300000731)**	
2B	70000127	1	USA Built Machines **(SN 0300082709 through 0300123999)**	
2B	70000127	1	Belgium Built Machines **(SN 1300000731 through 1300006000)**	
2B		Ref	Circuit Breaker Options:	
2B	4360542	1	Circuit Breaker (110V/60Hz)	
2B	70002240	1	USA Built Machines (110V/50Hz) **(SN 0300065080 through 0300082708)**	
2B	70002240	1	Belgium Built Machines (110V/50Hz) **(Prior to SN 1300000731)**	

ITEM	PART NUMBER	QTY	DESCRIPTION	REV
2B	4360542	1	USA Built Machines (110V/50Hz) **(SN 0300082709 through 0300123999)**	
2B	4360542	1	Belgium Built Machines (110V/50Hz) **(SN 1300000731 through 1300006000)**	
2B	70000126	1	Circuit Breaker (220V/50Hz)	
2B	4460190	AR	Receptacle, Double (110V Box)	
2B	4460027	AR	Receptacle, Double Twist Lock (110V Box)	
2B	70000124	1	Receptacle, Double (220V Box)	
2B	70000125	1	Receptacle, Single Twist Lock (220V Box)	
2B	2920162	1	Lamp Assembly (USA Built Machines) **(SN 0300065080 through 0300082709)**	
2B	2920162	1	Lamp Assembly (Belgium Built Machines) **(Prior to SN 1300000731)**	
2B	7020191	1	Switch, Toggle (USA Built Machines) **(SN 0300065080 through 0300082709)**	
2B	7020191	1	Switch, Toggle (Belgium Built Machines) **(Prior to SN 1300000731)**	
2B	3520028	1	Plug, Hole	
2C		Ref	Voltmeter Options:	
2C	2420203	1	Voltmeter (110V)	
2C	7020192	1	Voltmeter (220V)	
2D		Ref	Pulley Options:	
2D	3580276	1	Pulley (110V/60Hz)	
2D	3580134	1	Pulley (110V/50Hz)	
2D	3580276	1	USA Built Machines (220V/50Hz) **(SN 0300065080 through 0300066784)**	
2D	3580134	1	USA Built Machines (220V/50Hz) **(SN 0300066785 through 0300123999)**	
2D	3580134	1	Belgium Built Machines (220V/50Hz)	
2D	7027887	1	Key, Woodruff	
3		Ref	Arm, Adjusting Options:	
3A	0200741	1	USA Built Machines **(SN 0300065080 through 0300068835)**	
3A	0200741	1	Belgium Built Machines **(Prior to SN 1300000006)**	
3B	0200742	1	USA Built Machines **(SN 0300068836 through 0300123999)**	
3B	0200742	1	Belgium Built Machines **(SN 1300000006 through 1300006000)**	
4		Ref	V-Belt Options:	
4	0480120	1	USA Built Machines (110V/60Hz) **(SN 0300065080 through 0300077520)**	
4	0480120	1	Belgium Built Machines (110V/60Hz) **(Prior to SN 1300000316)**	
4	0480122	1	USA Built Machines (110V/60Hz) **(SN 0300077521 through 0300123999)**	
4	0480122	1	Belgium Built Machines (110V/60Hz) **(SN 1300000316 through 1300006000)**	
	0480120	1	V-Belt (110V/50Hz)	
4	0480118	1	USA Built Machines (220V) **(SN 0300065080 through 0300066785)**	
4	0480118	1	Belgium Built Machines (220V) **(Prior to SN 1300000006)**	
4	0480120	1	220V (USA Built Machines) **(SN 0300038836 through 0300123999)**	
4	0480120	1	220V (Belgium Built Machines) **(SN 1300000006 through 1300006000)**	
5	0100011	AR	Compound, Locking	
6	0641772	1	Bolt 7/16in-14NC x 9in	
7	4751600	6	Flatwasher 3/8in Regular	

SECTION 2 - TURNTABLE

ITEM	PART NUMBER	QTY	DESCRIPTION	REV
8	2860012	1	Key, Woodruff	
9	3311605	1	Locknut 3/8in-16NC	
10	3311705	1	Locknut 7/16in-14NC	
11	3740080	1	Relay	
12	4460023	1	Connector, Strain Relief (USA Built Machines) **(SN 0300065080 through 0300082709)**	
12	4460023	1	Connector, Strain Relief (Belgium Built Machines) **(Prior to SN 1300000731)**	
13	0641508	1	Bolt 5/16in-18NC x 1in	
14	4751500	1	Flatwasher 5/16in Regular	
16	3520028	1	Plug, Hole (USA Built Machines) **(SN 0300065080 through 0300082709)**	
16	3520028	1	Plug, Hole (Belgium Built Machines) **(Prior to SN 1300000731)**	
17	0721006	1	Bolt #10-24NC x 3/4in	
18	3311005	3	Locknut #10-24NC	
19	4751000	8	Flatwasher #10 Regular	
20	4360336	1	Switch, Toggle (Not Shown - Located at Platform)	
21	4740397	1	Washer (Not Shown - Located at Platform)	
22	4060802	1	Guard, Switch (Not Shown - Located at Platform)	
23	2820031	AR	Heat Shrink (Not Shown - Located at Platform)	
24	3251102	1	Decal (Not Shown - Located at Platform)	
25	0721008	2	Bolt #10-24NC x 1in and SN 1300000731 **(SN 0300065080 through 0300082709)**	
26	0641610	1	Bolt 3/8in-16NC x 1-1/4in	
27		Ref	Breaker, Circuit - 30 Amp Options:	
27	Not Required	0	USA Built Machines **(SN 0300065080 through 0300068835)**	
27	Not Required	0	Belgium Built Machines **(Prior to SN 1300000006)**	
27	4360294	1	USA Built Machines **(SN 0300068836 through 0300082708)**	
27	4360294	1	Belgium Built Machines **(SN 1300000006 through 1300000730)**	
27	Not Required	0	USA Built Machines **(SN 0300082709 through 0300123999)**	
27	Not Required	0	Belgium Built Machines **(SN 1300000731 through 1300006000)**	

FIGURE 2-32. 2500W GENERATOR INSTALLATION - FORD ENGINES (USA BUILT MACHINES) (OPTIONAL) (SN 0300065080 through 0300078472)

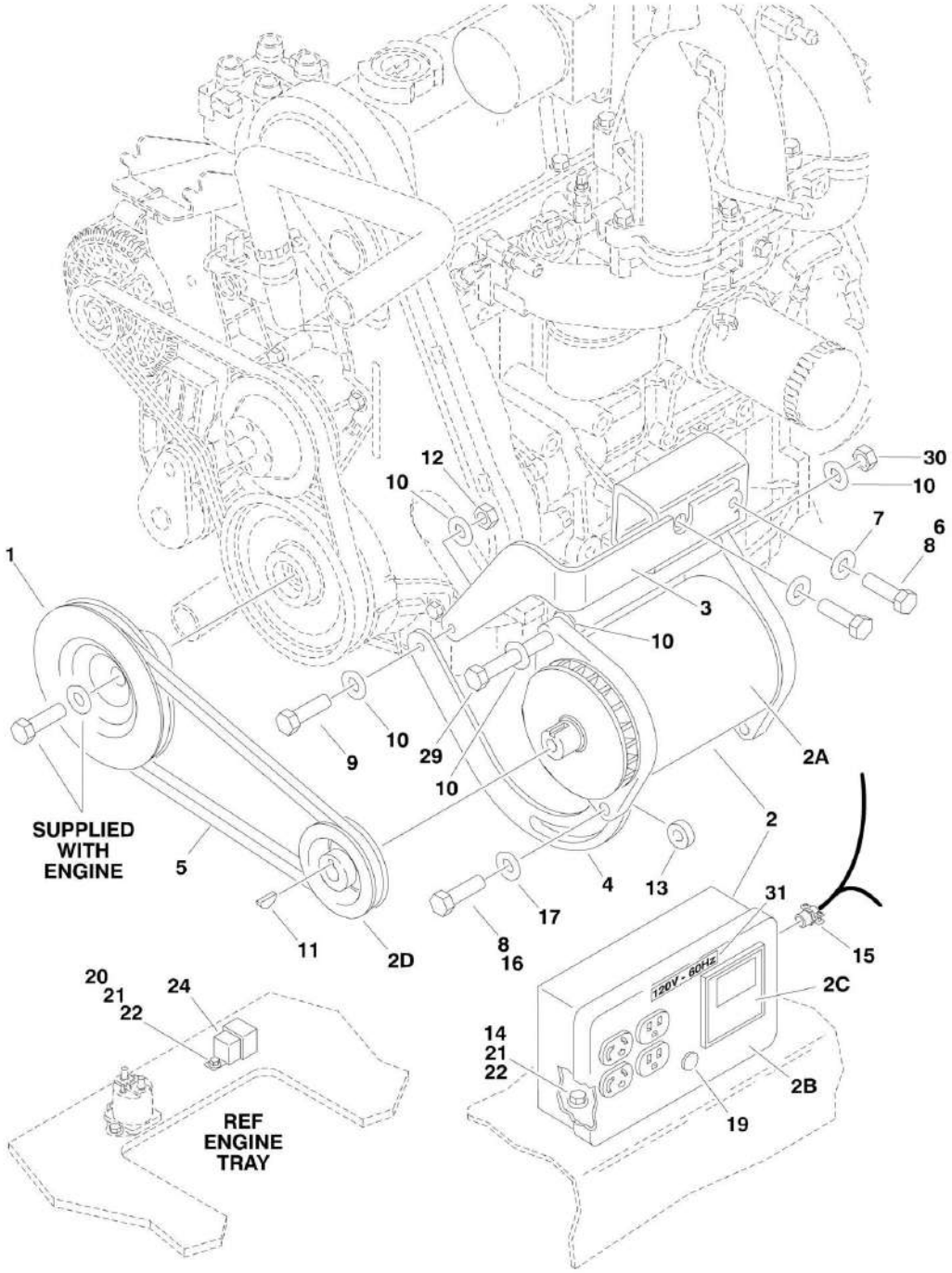

FIGURE 2-32. 2500W GENERATOR INSTALLATION - FORD ENGINES (USA BUILT MACHINES) (OPTIONAL) (SN 0300065080 through 0300078472)

ITEM	PART NUMBER	QTY	DESCRIPTION	REV
		Ref	**GENERATOR INSTALLATION OPTIONS:**	
	0271224	Ref	**110V Generator (SN 0300065080 through 0300078472)**	4-C
	0271226	Ref	**220V Generator (SN 0300065080 through 0300078472)**	3-B
1	3580250	1	Pulley	
2		Ref	Generator and Control Box Assembly Options:	
2	2460032	1	110V/60Hz Assembly **(SN 0300065080 through 0300064406)**	
2	2460011	1	110V/60Hz Assembly **(SN 0300064407 through 0300069627)**	
2	2460044	1	110V/60Hz Assembly **(SN 0300069628 through 0300078472)**	
2	2460034	1	220V/50Hz Assembly **(SN 0300065080 through 0300064406)**	
2	2460013	1	220V/50Hz Assembly **(SN 0300064407 through 0300078472)**	
2A		Ref	Generator Options:	
2A	7012558	1	Generator (110V/60Hz)	
2A	1001100321	1	Generator (220V/50Hz)	
		Ref	**Note: All Replacement Generators come standard with P/N 3580134 Pulley. This Pulley may not be correct for all applications. Refer to Pulley options below.**	
2A	7026199	1	110V/60Hz Armature with Slip Rings	
2A	70000123	1	220V/50Hz Armature with Slip Rings	
2A	7020109	4	Holder, Brush	
2A	7020108	4	Brush	
2A	7012513	4	Cap, Brush Holder	
2A	7012514	1	Fan	
2A	7020190	2	Bearing	
2A	7020110	1	End Bell, Front	
2A	7020111	1	End Bell, Rear	
2A	7020193	1	Cord, Power	
2B		Ref	Control Box Options:	
2B	7003657	1	Control Box (110V/60Hz)	
2B	70002235	1	Control Box (220V/50Hz)	
2B		Ref	Circuit Breaker Options:	
2B	4360542	1	Circuit Breaker (110V)	
2B	70000126	1	Circuit Breaker (220V)	
2B	4460190	2	Receptacle, Double (110V Box)	
2B	70000124	1	Receptacle, Double (220V Box)	
2B	70000125	1	Receptacle, Single Twist Lock (220V Box)	
2B	2920162	1	Lamp Assembly	
2B	7020191	1	Switch, Toggle	
2B	3520028	1	Plug, Hole	
2C		Ref	Voltmeter Options:	
2C	2420203	1	Voltmeter (110V)	
2C	7020192	1	Voltmeter (220V)	
2D		Ref	Pulley Options:	
2D		Ref	Pulley (110V/60Hz)	
2D	3580276	1	Pulley **(SN 0300065080 through 0300064406)**	
2D	3580134	1	Pulley **(SN 0300064407 through 0300069627)**	
2D	3580307	1	Pulley **(SN 0300069628 through 0300078472)**	
2D		Ref	Pulley (220V/50Hz)	
2D	3580276	1	Pulley **(SN 0300065080 through 0300064406)**	
2D	3580134	1	Pulley **(SN 0300064407 through 0300078472)**	

SECTION 2 - TURNTABLE

ITEM	PART NUMBER	QTY	DESCRIPTION	REV
2D	7027887	1	Key, Woodruff	
3	0902756	1	Bracket, Generator Mounting	
4	0200632	1	Arm, Adjusting	
5		Ref	V-Belt Options:	
5		Ref	V-Belt (110V)	
5	0480111	1	Belt, Generator **(SN 0300065080 through 0300064406)**	
5	0480050	1	V-Belt **(SN 0300064407 through 0300069627)**	
5	0480111	1	V-Belt **(SN 0300069628 through 0300078472)**	
5		Ref	V-Belt (220V)	
5	0480111	1	V-Belt **(SN 0300065080 through 0300064406)**	
5	0480050	1	V-Belt **(SN 0300064407 through 0300078472)**	
6	0701015	2	Bolt M10 x 35mm	
7	4812000	2	Flatwasher M10	
8	0100011	AR	Compound, Locking	
9	0681612	1	Bolt 3/8in-16NC x 1-1/2in (Grade 8)	
10	4751600	6	Flatwasher 3/8in Regular	
11	2860012	1	Key, Woodruff	
12	3311605	1	Locknut 3/8in-16NC	
13	4564417	1	Spacer, Tube	
14	0721008	2	Bolt #10-24NC x 1in	
15	4460023	1	Connector, Strain Relief	
16	0641508	1	Bolt 5/16in-18NC x 1in	
17	4751500	1	Flatwasher 5/16in Regular	
19	3520028	1	Plug, Hole	
20	0721006	1	Bolt #10-24NC x 3/4in	
21	3311005	3	Locknut #10-24NC	
22	4751000	8	Flatwasher #10 Regular	
23	2820031	1	Heat Shrink (Not Shown - Located at Platform)	
24	3740080	1	Relay, Bosch	
25	4360336	1	Switch, Toggle (Not Shown - Located at Platform)	
26	4740397	1	Washer (Not Shown - Located at Platform)	
27	4060802	1	Guard, Switch (Not Shown - Located at Platform)	
28	3251102	1	Decal (Not Shown - Located at Platform)	
29	0641772	1	Bolt 7/16in-14NC x 9in	
30	3311705	1	Locknut 7/16in-14NC	
31	3251243	2	Nameplate, 120V-60Hz (with 110V Generator Only)	

FIGURE 2-33. 2500W GENERATOR INSTALLATION - FORD ENGINES (USA BUILT MACHINES) (OPTIONAL) (SN 0300078473 through 0300123999)

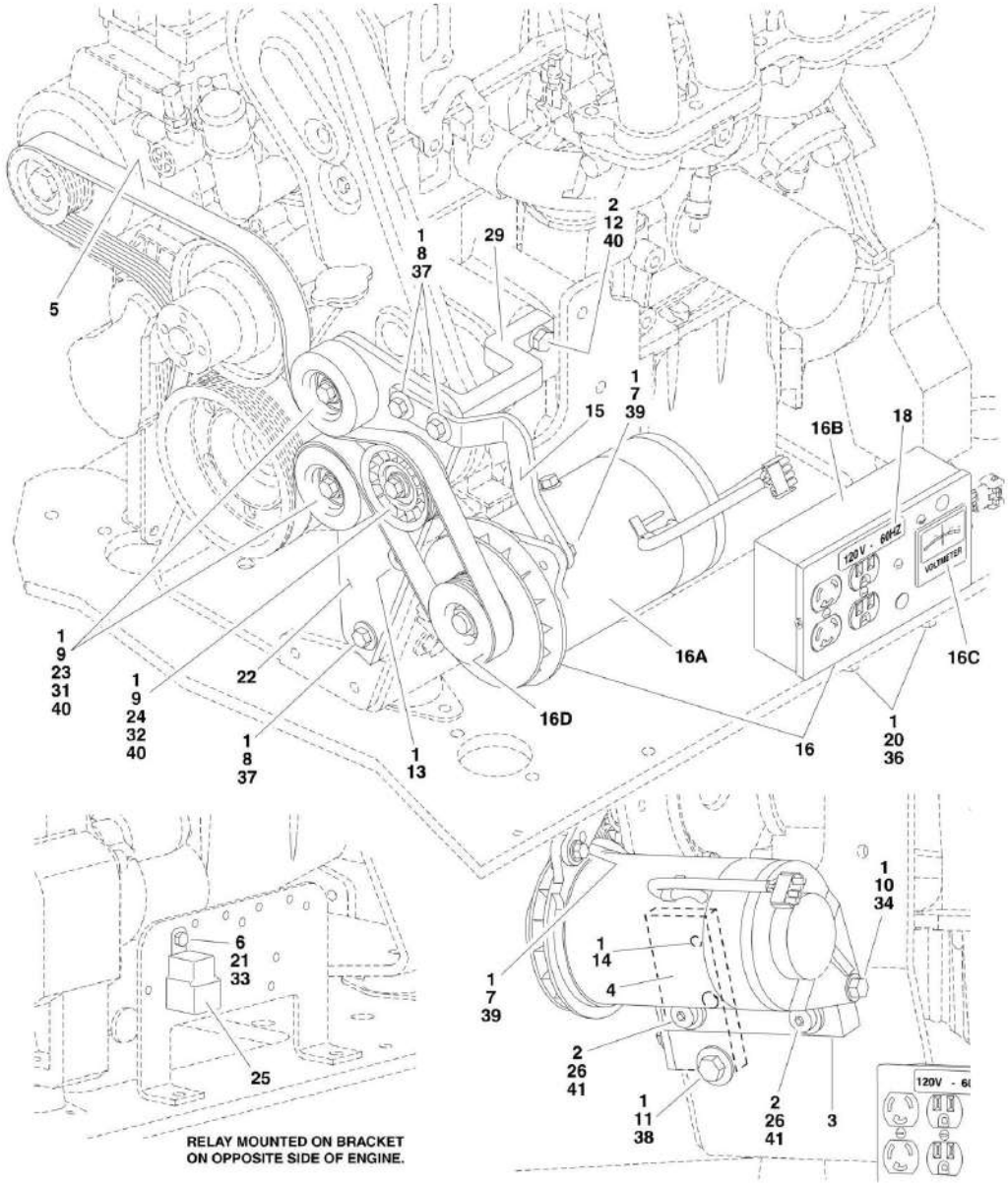

FIGURE 2-33. 2500W GENERATOR INSTALLATION - FORD ENGINES (USA BUILT MACHINES) (OPTIONAL) (SN 0300078473 through 0300123999)

ITEM	PART NUMBER	QTY	DESCRIPTION	REV
		Ref	**GENERATOR INSTALLATION OPTIONS:**	
	0273507	Ref	**110V/60Hz Generator with ADE System (SN 0300078473 through 0300123999)**	B
	0273511	Ref	**220V/50Hz Generator with ADE System (SN 0300078473 through 0300123999)**	A
1	0100011	AR	Compound, Locking	
2	0100019	AR	Compound, Locking	
3	0363082	1	Bar, Generator Adjuster	
4	0363097	1	Bar, Pulley Mounting	
5	0480135	1	V-Belt	
6	0641405	1	Bolt 1/4in-20NC x 5/8in	
7	0641508	1	Bolt 5/16in-18NC x 1in	
8	0641611	3	Bolt 3/8in-16NC x 1-3/8in	
9	0641612	3	Bolt 3/8in-16NC x 1-1/2in	
10	0641718	2	Bolt 7/16in-14NC x 2-1/4in	
11	0641810	1	Bolt 1/2in-13NC x 1-1/4in	
12	0701015	1	Bolt M10 x 35mm	
13	0741606	1	Screw, Countersunk 3/8in-16NC x 3/4in	
14	0741808	1	Screw, Countersunk 1/2in-13NC x 1in	
15	0902952	1	Bracket, Generator Mounting	
16		Ref	Generator and Control Box Assembly Options:	
16	2460051	1	Generator and Control Box Assembly (110V/60Hz Assembly)	
16	2460052	1	Generator and Control Box Assembly (220V/50Hz Assembly)	
16A		Ref	Generator Options:	
16A	7012558	1	Generator (110V/60Hz)	
16A	1001100321	1	Generator (220V/50Hz)	
		Ref	**Note: All Replacement Generators come standard with P/N 3580134 Pulley. This Pulley may not be correct for all applications. Refer to Pulley options below.**	
16A	7026199	1	110V/60Hz Armature with Slip Rings	
16A	70000123	1	220V/50Hz Armature with Slip Rings	
16A	7020109	4	Holder, Brush	
16A	7020108	4	Brush	
16A	7012513	4	Cap, Brush Holder	
16A	7012514	1	Fan	
16A	7020190	2	Bearing	
16A	7020110	1	End Bell, Front	
16A	7020111	1	End Bell, Rear	
16A	7020193	1	Cord, Power	
16B		Ref	Control Box Options:	
16B	7019680	1	Control Box (110V/60Hz)	
16B	70000127	1	Control Box (220V/50Hz)	
16B		Ref	Circuit Breaker Options:	
16B	4360542	1	Circuit Breaker (110V)	
16B	70000126	1	Circuit Breaker (220V)	
16B	4460190	1	Receptacle, Double (110V Box)	
16B	4460027	1	Receptacle, Double Twist Lock (110V Box)	
16B	70000124	1	Receptacle, Double (220V Box)	
16B	70000125	1	Receptacle, Single Twist Lock (220V Box)	
16B	3520028	1	Plug, Hole	

SECTION 2 - TURNTABLE

ITEM	PART NUMBER	QTY	DESCRIPTION	REV
16C		Ref	Voltmeter Options:	
16C	2420203	1	Voltmeter (110V)	
16C	7020192	1	Voltmeter (220V)	
16D		Ref	Pulley Options:	
16D	3580324	1	Pulley (110V)	
16D	3580325	1	Pulley (220V)	
16D	7027887	1	Key, Woodruff	
17	2820031	AR	Heat Shrink (Not Shown - Located at Platform)	
18		Ref	Decal Options:	
18	3251243	1	Decal (110V)	
18	1702590	1	Decal (220V)	
19	3252764	1	Nameplate (Not Shown - Located at Platform)	
20	3311005	2	Locknut # 10-24NC	
21	3311405	1	Locknut 1/4in-20NC	
22	3574225	1	Plate, Pulley Mounting	
23	3580312	1	Pulley, Idler	
24	3580313	1	Pulley, Grooved Idler	
25	3740080	1	Relay, Bosch	
26	3900322	2	Screw, Shoulder	
27	4060802	1	Guard, Switch (Not Shown - Located at Platform)	
28	4240018	AR	Tie-Strap (Not Shown)	
29	4340738	1	Support, Idler Pulley	
30	4360336	1	Switch, Toggle (Not Shown - Located at Platform)	
31	4568734	1	Spacer, Tube (Idler Pulley Non-Grooved)	
32	4568735	1	Spacer, Tube (Idler Pulley Grooved)	
33	4711400	1	Flatwasher 1/4in Thin	
34	4711700	2	Flatwasher 7/16in Thin	
35	4740397	1	Spacer (Not Shown - Located at Platform)	
36	4751000	2	Flatwasher #10 Regular	
37	4751600	3	Flatwasher 3/8in Regular	
38	4751800	1	Flatwasher 1/2in Regular	
39	4891500	1	Flatwasher 5/16in Hardened	
40	4891600	4	Flatwasher 3/8in Hardened	
41	4892000	2	Flatwasher 5/8in Hardened	

FIGURE 2-34. 2500W GENERATOR INSTALLATION - GM ENGINES (USA BUILT MACHINES) (OPTIONAL)

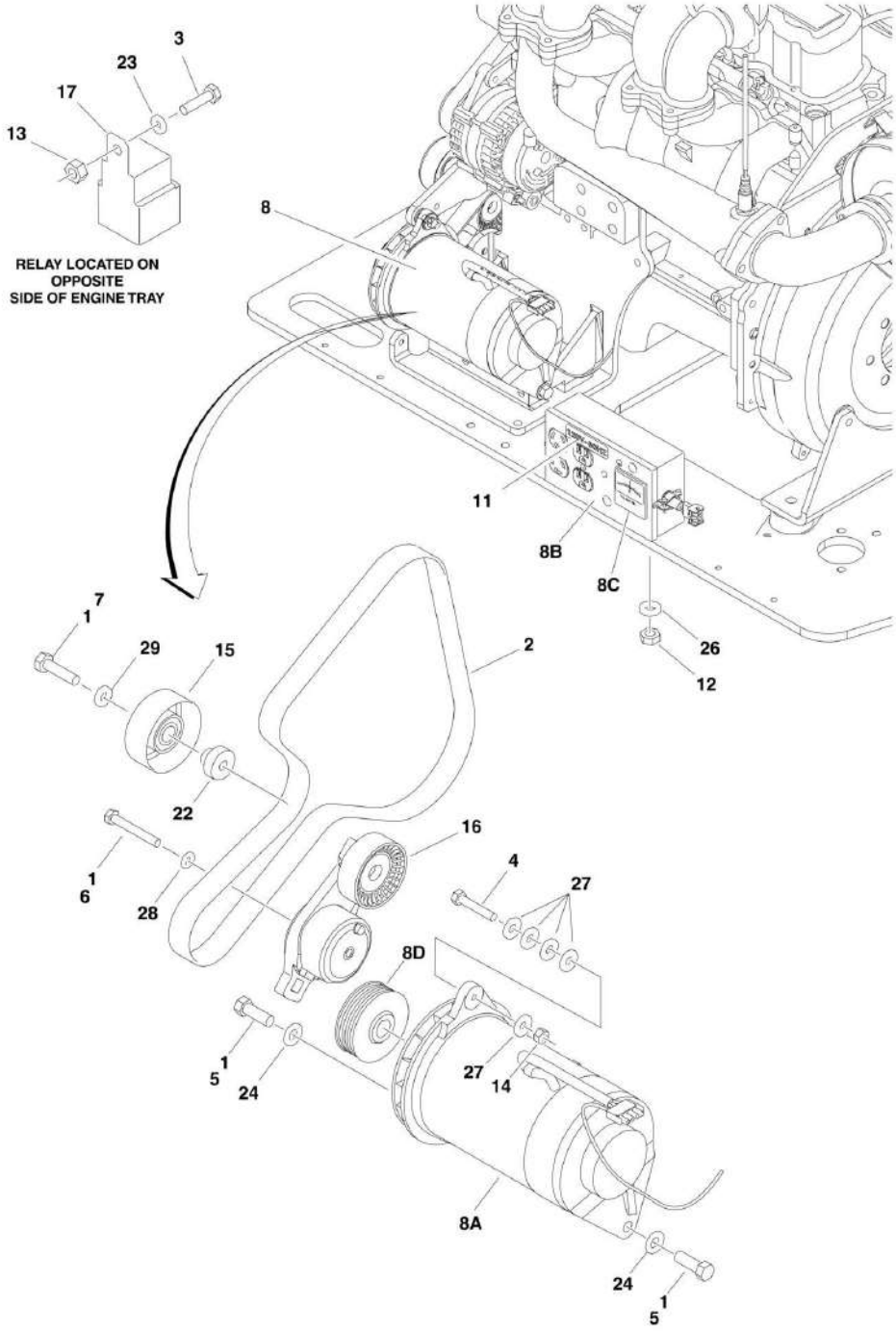

FIGURE 2-34. 2500W GENERATOR INSTALLATION - GM ENGINES (USA BUILT MACHINES) (OPTIONAL)

ITEM	PART NUMBER	QTY	DESCRIPTION	REV
		Ref	**GENERATOR INSTALLATION OPTIONS:**	
	0275039	Ref	**110V Generator**	E
1	0100011	AR	Compound, Locking	
2	0480142	1	V-Belt	
3	0641405	1	Bolt 1/4in-20NC x 5/8in	
4		Ref	Bolt 5/16in-18NC Options:	
4	0641514	1	Bolt 5/16in-18NC (1-3/4in Length) **(SN 0300065080 through 0300094973)**	
4	0641510	1	Bolt 5/16in-18NC (1-1/4in Length) **(SN 0300094974 through 0300123999)**	
5	0641710	2	Bolt 7/16in-14NC x 1-1/4in	
6	0700820	1	Bolt M8 x 60mm	
7	0701016	1	Bolt M10 x 340mm	
8	2460051	1	110V/60Hz Generator and Control Box Assembly	
8A	7012558	1	110V/60Hz Generator	
		Ref	**Note: All Replacement Generators come standard with P/N 3580134 Pulley. This Pulley may not be correct for all applications. Refer to Pulley options below.**	
8A	7026199	1	Armature with Slip Rings	
8A	7020109	4	Holder, Brush	
8A	7020108	4	Brush	
8A	7012513	4	Cap, Brush Holder	
8A	7012514	1	Fan	
8A	7020190	2	Bearing	
8A	7020110	1	End Bell, Front	
8A	7020111	1	End Bell, Rear	
8A	7020193	1	Cord, Power	
8B	7019680	1	110V/60Hz Control Box	
8B	4360542	1	Circuit Breaker	
8B	4460190	1	Receptacle, Double	
8B	4460027	1	Receptacle, Double Twist Lock	
8B	3520028	1	Plug, Hole	
8C	2420203	1	Voltmeter	
8D	3580324	1	Pulley	
8D	7027887	1	Key, Woodruff	
9	2820031	AR	Heat Shrink (Not Shown - Located at Platform)	
10	3251102	1	Nameplate - Generator (Not Shown - Located at Platform)	
11	3251243	1	Decal	
12	3311005	2	Locknut # 10-24NC	
13	3311405	1	Locknut 1/4in-20NC	
14	3311505	1	Locknut 5/16in-18NC	
15	3580312	1	Pulley, Idler	
16	3580348	1	Tensioner, Belt	
17	3740080	1	Relay, Bosch	
18	4060802	1	Guard, Switch (Not Shown - Located at Platform)	
19	4240018	AR	Tie-Strap (Not Shown)	
20	4360336	1	Switch, Toggle (Not Shown - Located at Platform)	
21	4460906	3	Terminal (Not Shown)	
22	4568735	1	Spacer, Tube (Idler Pulley Grooved)	
23	4711400	1	Flatwasher 1/4in Thin	

SECTION 2 - TURNTABLE

ITEM	PART NUMBER	QTY	DESCRIPTION	REV
24	4711700	2	Flatwasher 7/16in Thin	
25	4740397	1	Spacer (Not Shown - Located at Platform)	
26	4751000	2	Flatwasher #10 Regular	
27	4751500	4	Flatwasher 5/16in Regular	
28	4811900	1	Flatwasher M8	
29	4891600	1	Flatwasher 3/8in Hardened	

FIGURE 2-35. 2500W GENERATOR INSTALLATION - PERKINS ENGINES (USA AND BELGIUM BUILT MACHINES) (OPTIONAL)

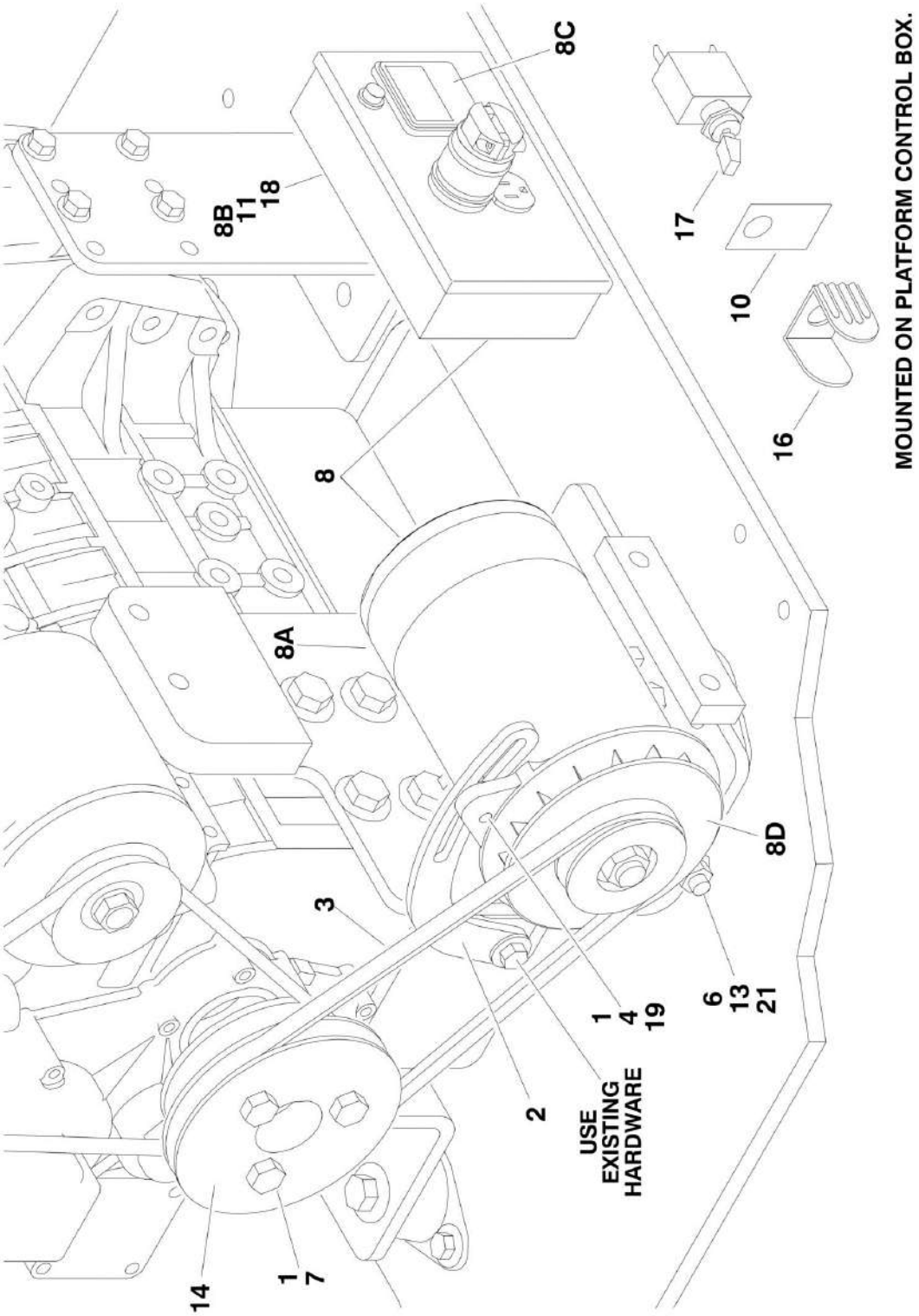

FIGURE 2-35. 2500W GENERATOR INSTALLATION - PERKINS ENGINES (USA AND BELGIUM BUILT MACHINES) (OPTIONAL)

ITEM	PART NUMBER	QTY	DESCRIPTION	REV
		Ref	**GENERATOR INSTALLATION**	
	1001097325	Ref	**110V/60Hz Generator (Available on all Specs Except Australian and CE Specs)**	C
	1001097339	Ref	**110V/50Hz Generator (Available on CE Specs Only)**	B
	1001097324	Ref	**220V/50HZ Generator (Available on ANSI Export, Australian and CE Specs)**	B
1	0100011	AR	Compound, Locking	
2	0200742	1	Arm, Adjusting	
3		Ref	V-Belt Options:	
3	0480121	1	V-Belt (110V)	
3	0480120	1	V-Belt (220V)	
4	0641508	1	Bolt 5/16in-18NC x 1in	
6	0641772	1	Bolt 7/16in-14NC x 9in	
7	0701217	3	Bolt M12 x 45mm	
8		Ref	Generator and Control Box Assembly Options:	
8	2460055	1	Generator and Control Box Assembly (110V/60Hz)	
8	2460057	1	Generator and Control Box Assembly (110V/50Hz)	
8	2460056	1	Generator and Control Box Assembly (220V/50Hz)	
8A		Ref	Replacement Generator Only:	
8A	7012558	1	Replacement Generator (110V/60Hz)	
8A	2460049	1	Replacement Generator (110V/50Hz)	
8A	1001100321	1	Replacement Generator (220V/50Hz)	
		Ref	**Note: All Replacement Generators come standard with P/N 3580134 Pulley. This Pulley may not be correct for all applications. Refer to Pulley options below.**	
8A	7026199	1	110V/60Hz Armature with Slip Rings	
8A	70000122	1	110V/50Hz Armature with Slip Rings	
8A	70000123	1	220V/50Hz Armature with Slip Rings	
8A	7020109	4	Holder, Brush	
8A	7020108	4	Brush	
8A	7012513	4	Cap, Brush Holder	
8A	7012514	1	Fan	
8A	7020190	2	Bearing	
8A	7020110	1	End Bell, Front	
8A	7020111	1	End Bell, Rear	
8A	7020193	1	Cord, Power	
8B		Ref	Control Box Options:	
8B	7019680	1	Control Box (110V)	
8B	70000127	1	Control Box (220V)	
8B		Ref	Circuit Breaker Options:	
8B	4360542	1	Circuit Breaker (110V)	
8B	70000126	1	Circuit Breaker (220V)	
8B	4460190	1	Receptacle, Double (110V Box)	
8B	4460027	1	Receptacle, Double Twist Lock (110V Box)	
8B	70000124	1	Receptacle, Double (220V Box)	
8B	70000125	1	Receptacle, Single Twist Lock (220V Box)	
8B	3520028	1	Plug, Hole	
8C		Ref	Voltmeter Options:	
8C	2420203	1	Voltmeter (110V)	
8C	7020192	1	Voltmeter (220V)	

SECTION 2 - TURNTABLE

ITEM	PART NUMBER	QTY	DESCRIPTION	REV
8D		Ref	Pulley Options:	
8D	3580276	1	Pulley (110V/60Hz)	
8D	3580134	1	Pulley (110V/50Hz)	
8D	3580134	1	Pulley (220V/50Hz)	
8D	7027887	1	Key, Woodruff	
9	2820031	1	Heat Shrink (Not Shown - Located at Platform)	
10	3251102	1	Decal (Located at Platform)	
11	3311005	2	Locknut #10-24NC	
13	3311705	1	Locknut 7/16in-14NC	
14	3580315	1	Pulley	
15	3740080	1	Relay (Not Shown - Located Back Side of Engine Tray with Existing Relays)	
16	4060802	1	Guard, Switch (Located at Platform)	
17	4360336	1	Switch, Toggle (Located at Platform)	
18	4751000	8	Flatwasher #10 Regular	
19	4751500	1	Flatwasher 5/16in	
21	4751700	6	Flatwasher 3/8in Regular	

FIGURE 2-36. 7500W GENERATOR INSTALLATION - CATERPILLAR ENGINE MACHINES (USA BUILT MACHINES)

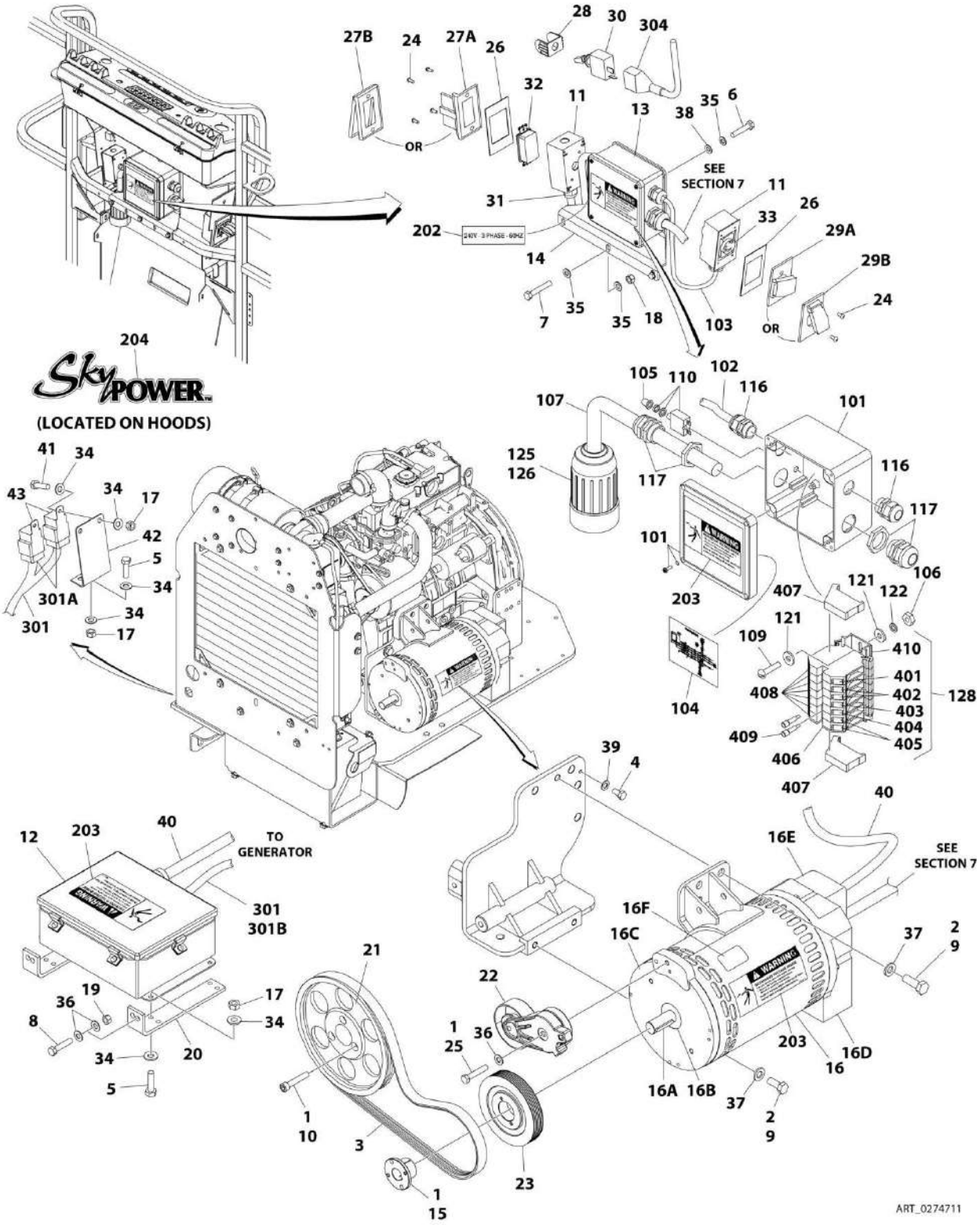

FIGURE 2-36. 7500W GENERATOR INSTALLATION - CATERPILLAR ENGINE MACHINES (USA BUILT MACHINES)

ITEM	PART NUMBER	QTY	DESCRIPTION	REV
		Ref	**7500W GENERATOR INSTALLATION - CATERPILLAR ENGINE MACHINES (USA BUILT MACHINES)**	
		Ref	**Caterpillar Engine Machines without UGM:**	
	0274711	Ref	**60Hz Spec**	E
1	0100011	AR	Compound, Locking	
2	0100019	AR	Compound, Locking	
3	0480129	1	Belt	
4	0641403	1	Bolt 1/4 x 3/8	
5	0641408	5	Bolt 1/4 x 1	
6	0641505	4	Bolt 5/16 x 5/8	
7	0641516	3	Bolt 5/16 x 2	
8	0641614	2	Bolt 3/8 x 1-3/4	
9	0641808	4	Bolt 1/2 x 1	
10	0701217	3	Bolt M12 x 45	
11	0860038	2	Box, Switch	
12	0861538	1	Control Box Assembly	
12	7024488	1	Card, Circuit - Generator Power	
12	See Note	1	Fuse (Note: Not Available - Purchase Locally)	
12	7024489	1	Card, Circuit - Control	
12	70000619	1	Harness, Circuit Card	
13	0861542	1	Junction Box Assembly (See Items 101-128 for Breakdown)	
14	0902888	1	Bracket	
15	0962520	1	Bushing	
16	2460048	1	Generator Assembly	
16	70001100	1	Rotor (Includes p/n 70001384 & 70000863) (Not Shown)	
16	70001384	1	Bearing, Ball Radial (Not Shown)	
16	70000863	1	Fan (Not Shown)	
16	70002088	1	Stator (Not Shown)	
16	70002297	1	Stud	
16	70003631	1	Brushholder Assembly (Not Shown)	
16A	70004171	1	Key	
16B	70001966	1	Bearing, Ball Radial (Located in Belt Tensioner Endbell)	
16B	70003708	1	Ring, Internal Retaining (Located in Belt Tensioner Endbell)	
16B	70003709	1	Ring, External Retaining (Located in Belt Tensioner Endbell)	
16C	70001953	1	Endbell, Belt Tensioner	
16D	70004169	1	Endbell, Brush Block	
16E	70004169	1	Shroud	
16E	See Note	NSS	Insulator, Endbell (Note: Not Available for Purchase)	
16E	7027799	1	Block, Connector - 6 Position (Not Shown)	
16E	70002460	1	Nut, Brass (Attaches p/n 7027799 to Cover) (Not Shown)	
16E	7024485	1	Breaker, Circuit 30Amp (Not Shown)	
16E	70001696	1	Boot, Breaker (Not Shown)	
16E	7026626	1	Connector - 6 Position (Includes Seal) (Not Shown - Plugs into Item 39)	
16E	7026597	1	Connector, with Leads (Not Shown)	
16E	7026188	1	Clamp, Cable Options (Not Shown)	
16E	70004169	1	Plate, End Panel	
16E	70001974	1	Decal - Terminal Connections	
16F	70001973	1	Decal - Warning Moving Parts	

SECTION 2 - TURNTABLE

ITEM	PART NUMBER	QTY	DESCRIPTION	REV
17	3311405	7	Nut 1/4	
18	3311505	3	Nut 5/16	
19	3311605	2	Nut 3/8	
20	3574523	2	Plate	
21	3580316	1	Pulley	
22	3580317	1	Pulley	
23	3580318	1	Pulley	
24	3910606	8	Screw #6 x 3/8	
25	0641618	1	Bolt 3/8 x 2-1/4	
26	3960422	2	Gasket	
27		Ref	Cover, Receptacle Options:	
27A	4060700	1	Cover (Side Hinge)	
27B	1001110873	1	Cover (Top Hinge)	
28	4060802	1	Guard, Switch	
29		Ref	Cover, Receptacle Options:	
29A	4061043	1	Cover (Side Hinge)	
29B	1001110872	1	Cover (Top Hinge)	
30	4360336	1	Switch, Toggle	
31	4460071	2	Connector, Strain Relief	
32	4460346	1	Receptacle	
33	4460958	1	Receptacle, Female Twist-Lock	
34	4711400	14	Washer 1/4	
35	4711500	10	Washer 5/16	
36	4711600	5	Washer 3/8	
37	4711800	4	Washer 1/2	
38	4761500	4	Washer 5/16	
39	4791400	1	Washer 1/4	
40	4922925	1	Harness, Generator	
40	4460225	1	Plug, Male - 6 Position (Plugs into Generator)	
40	See Note	NSS	Socket, Female (Use with 4460225)	
40	See Note	NSS	Seal, Plug (Use with 4460225)	
40	See Note	NSS	Seal, Interface (Use with 4460225)	
41	0641405	2	Bolt 1/4 x 5/8	
42	3574163	1	Bracket	
43	3740080	2	Relay	
	0861542	Ref	**JUNCTION BOX ASSEMBLY**	D
101	0861541	1	Box, Junction	
102	1060494	2 ft/.6m	Cable, Electrical - 12/3	
103	1060708	2.5 ft/ 0.8m	Cable, Electrical - 10/3	
104	1705376	1	Decal - Wiring Schematic	
105	3300396	1	Cover, Fuse	
106	3310601	2	Nut 6	
107	1060343	1.5 ft/ 0.5m	Cable, Electrical - 10/4	
109	3910610	2	Bolt 6-32 x 5/8	
110	4360070	1	Circuit Breaker - 15Amp	
116	4460425	2	Strain Relief, Terminal	
117	4460426	2	Connector, Strain Relief	
121	4750600	4	Washer #6	
122	4760600	2	Washer #6	
125	1671092	1	Cover (60Hz Spec Only)	

ITEM	PART NUMBER	QTY	DESCRIPTION	REV
126	4460963	1	Connector	
128	1001121340	1	Terminal Block Assembly (See Items 401-410 for Breakdown)	
	0273380	Ref	**DECAL INSTALLATION**	B
202	1705375	1	Decal - 240V - 3 Phase - 60Hz	
203	1705387	3	Decal - Hazardous Voltage	
204	1705460	2	Decal - SkyPower	
	4933264	Ref	**ELECTRICAL DIAGRAM COMPONENTS**	C
301	4922757	Ref	Generator Harness Options (See ELECTRICAL SECTION for Breakdown):	3-C
301A	4460374	2	Plug, Sealed Relay	
301A	4460375	7	Terminal	
301B	4460967	1	Plug, Male - 3 Position	
301B	4460465	1	Socket, Female	
301C	2400060	1	Fuseholder (Not Shown)	
301C	2400064	1	Fuse - 5Amp (Not Shown)	
304	4922641	1	Switch Harness	
		Ref	**TERMINAL BLOCK ASSEMBLY**	
	NPN	Ref	**Gray Terminal Block Assembly (Complete Assembly Not Available - Purchase Individual Components)**	
	1001121340	Ref	**Tan Terminal Block Assembly**	A
401		Ref	Marker Strip #1 Options:	
401	4460411	2	Gray Terminal Block Assembly	
401	70002818	2	Tan Terminal Block Assembly	
402		Ref	Marker Strip #2 Options:	
402	4460412	AR	Gray Terminal Block Assembly	
402	70002819	4	Tan Terminal Block Assembly	
403		Ref	Marker Strip #3 Options:	
403	4460413	2	Gray Terminal Block Assembly	
403	70002820	2	Tan Terminal Block Assembly	
404		Ref	Marker Strip #4 Options:	
404	4460414	2	Gray Terminal Block Assembly	
404	70002821	2	Tan Terminal Block Assembly	
405		Ref	Marker Strip #5 Options:	
405	4460415	AR	Gray Terminal Block Assembly	
405	70002822	4	Tan Terminal Block Assembly	
406		Ref	Terminal, End Barrier Options:	
406	4460956	1	Gray Terminal Block Assembly	
406	70002823	1	Tan Terminal Block Assembly	
407		Ref	Terminal, End Block Options:	
407	4460607	2	Gray Terminal Block Assembly	
407	70002824	2	Tan Terminal Block Assembly	
408		Ref	Terminal, Block Options:	
408	4460957	AR	Gray Terminal Block Assembly	
408	70002825	7	Tan Terminal Block Assembly	
409		Ref	Terminal, Cross Connector Jumper Options:	
409	4461001	2	Gray Terminal Block Assembly	
409	70002826	2	Tan Terminal Block Assembly	
410	3640986	1	Rail, Relay **(Prior to SN 0300072911)**	
410	3641533	1	Rail, Relay **(SN 0300072911 to Present)**	

FIGURE 2-37. 7500W GENERATOR INSTALLATION - DEUTZ ENGINE MACHINES (USA BUILT MACHINES)

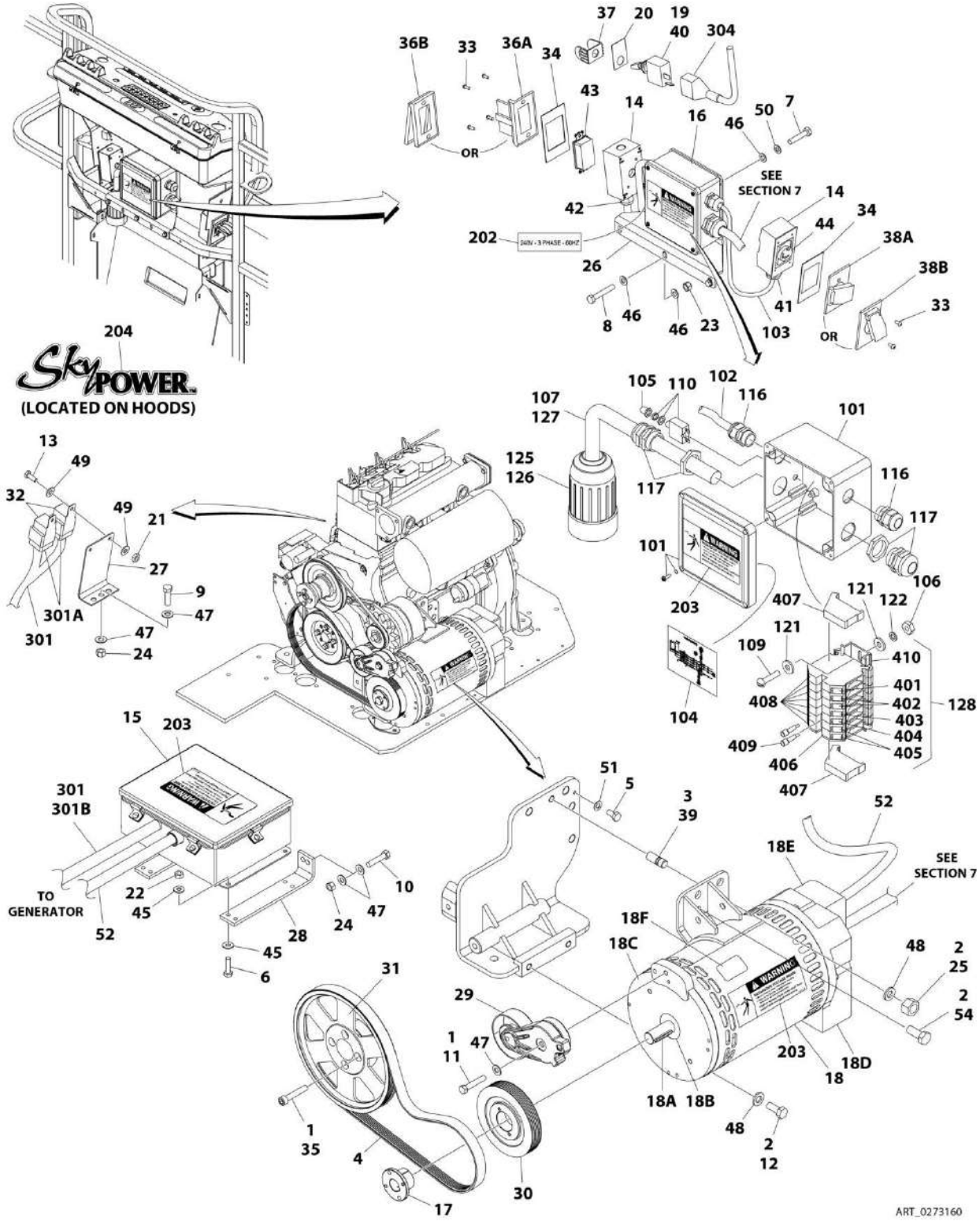

FIGURE 2-37. 7500W GENERATOR INSTALLATION - DEUTZ ENGINE MACHINES (USA BUILT MACHINES)

ITEM	PART NUMBER	QTY	DESCRIPTION	REV
		Ref	**7500W GENERATOR INSTALLATION - DEUTZ ENGINE MACHINES (USA BUILT MACHINES)**	
		Ref	**Deutz Engine Machines without UGM:**	
	0273420	Ref	**50Hz Spec**	G
	0273160	Ref	**60Hz Spec**	G
1	0100011	AR	Compound, Locking	
2	0100019	AR	Compound, Locking	
3	0100062	AR	Loctite, #RC/680	
4	0480129	1	Belt (50Hz Spec)	
4	0480128	1	Belt (60Hz Spec)	
5	0641403	1	Bolt 1/4 x 3/8	
6	0641408	4	Bolt 1/4 x 1	
7	0641505	4	Bolt 5/16 x 5/8	
8	0641516	3	Bolt 5/16 x 2	
9	0641610	1	Bolt 3/8 x 1-1/4	
10	0641614	2	Bolt 3/8 x 1-3/4	
11	0641618	1	Bolt 3/8 x 2-1/4	
12	0641808	2	Bolt 1/2 x 1	
13	0721004	2	Bolt #10 x 1/2	
14	0860038	2	Box, Switch	
15	0861572	1	Control Box Assembly (50Hz Spec)	
15	0861538	1	Control Box Assembly (60Hz Spec)	
15	7024488	1	Card, Circuit - Generator Power	
15	See Note	NSS	Fuse (Note: Not Available - Purchase Locally)	
15	7024489	1	Card, Circuit - Control	
		Ref	**Note: Same Circuit Card (P/N 7024489) is used for both 50Hz and 60Hz. When replacing card, rocker switch on card must be set for required application.**	
15	70000619	1	Harness, Circuit Card	
16	0861567	1	Junction Box Assembly (50Hz Spec) (See Items 101-128 for Breakdown)	
16	0861542	1	Junction Box Assembly (60Hz Spec) (See Items 101-128 for Breakdown)	
17	0962520	1	Bushing	
18	2460048	1	Generator Assembly	
18	70001100	1	Rotor (Includes p/n 70001384 & 70000863) (Not Shown)	
18	70001384	1	Bearing, Ball Radial (Not Shown)	
18	70000863	1	Fan (Not Shown)	
18	70002088	1	Stator (Not Shown)	
18	70002297	1	Stud	
18	70003631	1	Brushholder Assembly (Not Shown)	
18A	70004171	1	Key	
18B	70001966	1	Bearing, Ball Radial (Located in Belt Tensioner Endbell)	
18B	70003708	1	Ring, Internal Retaining (Located in Belt Tensioner Endbell)	
18B	70003709	1	Ring, External Retaining (Located in Belt Tensioner Endbell)	
18C	70001953	1	Endbell, Belt Tensioner	
18D	70004169	1	Endbell, Brush Block	
18E	70004169	1	Shroud	
18E	See Note	NSS	Insulator, Endbell (Note: Not Available for Purchase)	
18E	7027799	1	Block, Connector - 6 Position (Not Shown)	

SECTION 2 - TURNTABLE

ITEM	PART NUMBER	QTY	DESCRIPTION	REV
18E	70002460	1	Nut, Brass (Attaches p/n 7027799 to Cover) (Not Shown)	
18E	7024485	1	Breaker, Circuit 30Amp (Not Shown)	
18E	70001696	1	Boot, Breaker (Not Shown)	
18E	7026626	1	Connector - 6 Position (Includes Seal) (Not Shown - Plugs into Item 39)	
18E	7026597	1	Connector, with Leads (Not Shown)	
18E	7026188	1	Clamp, Cable Options (Not Shown)	
18E	70004169	1	Plate, End Panel	
18E	70001974	1	Decal - Terminal Connections	
18F	70001973	1	Decal - Warning Moving Parts	
19	2820031	1	Heat Shrink	
20	3252764	1	Nameplate	
21	3311005	2	Nut #10	
22	3311405	4	Nut 1/4	
23	3311505	3	Nut 5/16	
24	3311605	3	Nut 3/8	
25	3311801	1	Nut 1/2	
26	0902888	1	Bracket	
27	3574163	1	Bracket	
28	3574523	2	Plate	
29	3580317	1	Pulley	
30	3580319	1	Pulley (50Hz Spec)	
30	3580318	1	Pulley (60Hz Spec)	
31	3580320	1	Pulley	
32	3740080	2	Relay	
33	3910606	8	Screw #6 x 3/8	
34	3960422	2	Gasket	
35	4032015	4	Bolt M10 x 55	
36		Ref	Cover, Receptacle Options:	
36A	4060700	1	Cover (Side Hinge)	
36B	1001110873	1	Cover (Top Hinge)	
37	4060802	1	Guard, Switch	
38		Ref	Cover, Receptacle Options:	
38A	4061043	1	Cover (Side Hinge)	
38B	1001110872	1	Cover (Top Hinge)	
39	4300157	1	Stud	
40	4360336	1	Switch, Toggle	
41	4460051	1	Connector, Strain Relief	
42	4460071	1	Connector, Strain Relief	
43	4460346	1	Receptacle	
44	4460958	1	Receptacle, Female Twist-Lock	
45	4711400	8	Washer 1/4	
46	4711500	10	Washer 5/16	
47	4711600	7	Washer 3/8	
48	4711800	3	Washer 1/2	
49	4751000	4	Washer #10	
50	4761500	4	Washer 5/16	
51	4791400	1	Washer 1/4	
52	4922925	1	Harness, Generator	
52	4460225	1	Plug, Male - 6 Position (Plugs into Generator)	
52	See Note	NSS	Socket, Female (Use with 4460225)	
52	See Note	NSS	Seal, Plug (Use with 4460225)	

ITEM	PART NUMBER	QTY	DESCRIPTION	REV
52	See Note	1	Seal, Interface (Use with 4460225)	
54	0771415	1	Bolt M14 x 35 Grade 10.9	
		Ref	**JUNCTION BOX ASSEMBLY**	
	0861567	Ref	**50Hz Spec**	B
	0861542	Ref	**60Hz Spec**	D
101	0861541	1	Box, Junction	
102	See Note	NSS	Cable, Electrical - 12/3 (50Hz Spec) (Supply Locally)	
102	1060494	2 ft/.6m	Cable, Electrical - 12/3 (60Hz Spec)	
103	See Note	NSS	Cable, Electrical - 10/3 (50Hz Spec) (Supply Locally)	
103	1060708	2.5 ft/ 0.8m	Cable, Electrical - 10/3 (60Hz Spec)	
104	1705376	1	Decal - Wiring Schematic	
105	3300396	1	Cover, Fuse	
106	3310601	2	Nut 6	
107	1060343	1.5 ft/ 0.5m	Cable, Electrical - 10/4 (60Hz Spec Only)	
109	3910610	2	Bolt 6-32 x 5/8	
110	4360070	1	Circuit Breaker - 15Amp	
116	4460425	2	Strain Relief, Terminal	
117	4460426	2	Connector, Strain Relief	
121	4750600	4	Washer #6	
122	4760600	2	Washer #6	
125	1671092	1	Cover (60Hz Spec Only)	
126	4460963	1	Connector (60Hz Spec Only)	
127	3520189	1	Plug (50Hz Spec Only)	
128	NPN	1	Gray Terminal Block Assembly (See Items 401-410 for Breakdown)	
128	1001121340	1	Tan Terminal Block Assembly (See Items 401-410 for Breakdown)	
		Ref	**DECAL INSTALLATIONS**	
	0272589	Ref	**50Hz Spec**	A
	0273380	Ref	**60Hz Spec**	B
202		Ref	**Decal - 240V - 3 Phase Options:**	
202	1705461	1	50Hz Spec	
202	1705375	1	60Hz Spec	
203		Ref	Decal - Hazardous Voltage Options:	
203	1705489	3	50Hz Spec	
203	1705387	3	60Hz Spec	
204	1705460	2	Decal - SkyPower	
	4933264	Ref	**ELECTRICAL DIAGRAM COMPONENTS**	C
301	4922757	Ref	Generator Harness Options (See ELECTRICAL SECTION for Breakdown):	3-C
301A	4460374	2	Plug, Sealed Relay	
301A	4460375	7	Terminal	
301B	4460967	1	Plug, Male - 3 Position	
301B	4460465	3	Socket, Female	
301C	2400060	1	Fuseholder (Not Shown)	
301C	2400064	1	Fuse - 5Amp (Not Shown)	
304	4922641	1	Switch Harness	
		Ref	**TERMINAL BLOCK ASSEMBLY**	
	NPN	Ref	**Gray Terminal Block Assembly (Complete Assembly Not Available - Purchase Individual Components)**	
	1001121340	Ref	**Tan Terminal Block Assembly**	A

SECTION 2 - TURNTABLE

ITEM	PART NUMBER	QTY	DESCRIPTION	REV
401		Ref	Marker Strip #1 Options:	
401	4460411	2	Gray Terminal Block Assembly	
401	70002818	2	Tan Terminal Block Assembly	
402		Ref	Marker Strip #2 Options:	
402	4460412	AR	Gray Terminal Block Assembly	
402	70002819	4	Tan Terminal Block Assembly	
403		Ref	Marker Strip #3 Options:	
403	4460413	1	Gray Terminal Block Assembly	
403	70002820	2	Tan Terminal Block Assembly	
404		Ref	Marker Strip #4 Options:	
404	4460414	2	Gray Terminal Block Assembly	
404	70002821	2	Tan Terminal Block Assembly	
405		Ref	Marker Strip #5 Options:	
405	4460415	AR	Gray Terminal Block Assembly	
405	70002822	4	Tan Terminal Block Assembly	
406		Ref	Terminal, End Barrier Options:	
406	4460956	1	Gray Terminal Block Assembly	
406	70002823	1	Tan Terminal Block Assembly	
407		Ref	Terminal, End Block Options:	
407	4460607	AR	Gray Terminal Block Assembly	
407	70002824	2	Tan Terminal Block Assembly	
408		Ref	Terminal, Block Options:	
408	4460957	7	Gray Terminal Block Assembly	
408	70002825	7	Tan Terminal Block Assembly	
409		Ref	Terminal, Cross Connector Jumper Options:	
409	4461001	2	Gray Terminal Block Assembly	
409	70002826	2	Tan Terminal Block Assembly	
410	3640986	1	Rail, Relay **(Prior to SN 0300072911)**	
410	3641533	1	Rail, Relay **(SN 0300072911 to Present)**	

FIGURE 2-38. 7500W GENERATOR INSTALLATION - DEUTZ ENGINE MACHINES (BELGIUM BUILT MACHINES)

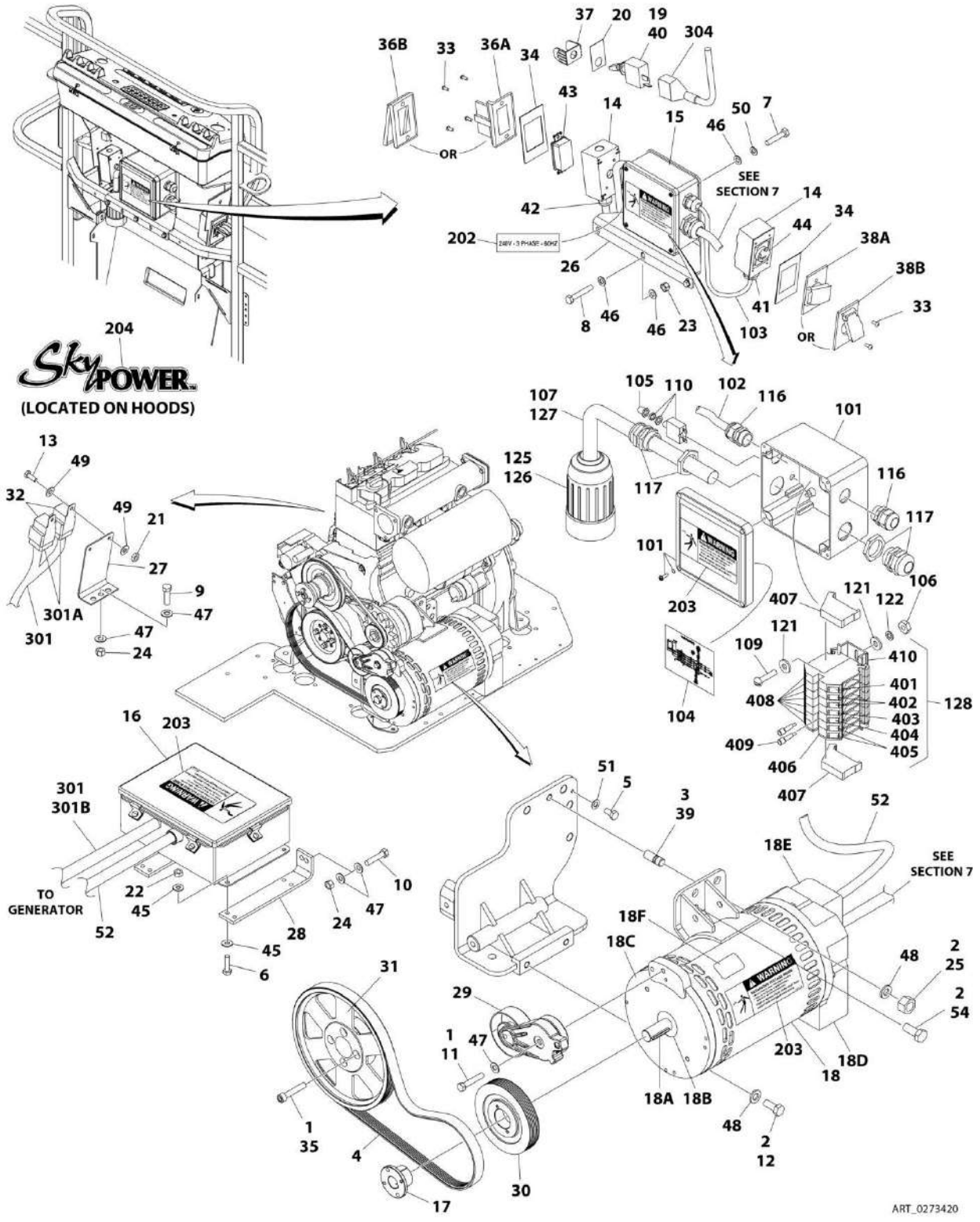

FIGURE 2-38. 7500W GENERATOR INSTALLATION - DEUTZ ENGINE MACHINES (BELGIUM BUILT MACHINES)

ITEM	PART NUMBER	QTY	DESCRIPTION	REV
		Ref	**7500W GENERATOR INSTALLATION - DEUTZ ENGINE MACHINES (BELGIUM BUILT MACHINES)**	
		Ref	**Deutz Engine Machines without UGM:**	
	0275661	Ref	**50Hz Spec**	C
	0273420	Ref	**60Hz Spec**	G
1	0100011	AR	Compound, Locking	
2	0100019	AR	Compound, Locking	
3	0100062	AR	Loctite, #RC/680	
4	0480129	1	Belt (50Hz Spec)	
4	0480128	1	Belt (60Hz Spec)	
5	0641403	1	Bolt 1/4 x 3/8	
6	0641408	4	Bolt 1/4 x 1	
7	0641505	4	Bolt 5/16 x 5/8	
8	0641516	AR	Bolt 5/16 x 2	
9	0641610	1	Bolt 3/8 x 1-1/4	
10	0641614	2	Bolt 3/8 x 1-3/4	
11	0641618	1	Bolt 3/8 x 2-1/4	
12	0641808	2	Bolt 1/2 x 1	
13	0721004	2	Bolt #10 x 1/2	
14	See Note	2	Box, Switch (50Hz Spec) (Supply Locally)	
14	0860038	2	Box, Switch (60Hz Spec)	
15	0861572	1	Control Box Assembly (50Hz Spec)	
15	0861538	1	Control Box Assembly (60Hz Spec)	
15	7024488	1	Card, Circuit - Generator Power	
15	See Note	1	Fuse (Note: Not Available - Purchase Locally)	
15	7024489	1	Card, Circuit - Control	
	See Note	Ref	**Note: Same Circuit Card (P/N 7024489) is used for both 60Hz and 50Hz. When replacing card, rocker switch on card must be set for required application.**	
15	70000619	1	Harness, Circuit Card	
16	0861567	1	Junction Box Assembly (50Hz Spec) (See Items 101-128 for Breakdown)	
16	0861542	1	Junction Box Assembly (60Hz Spec) (See Items 101-128 for Breakdown)	
17	0962520	1	Bushing	
18	2460048	1	Generator Assembly	
18	70001100	1	Rotor (Includes p/n 70001384 & 70000863) (Not Shown)	
18	70001384	1	Bearing, Ball Radial (Not Shown)	
18	70000863	1	Fan (Not Shown)	
18	70002088	1	Stator (Not Shown)	
18	70002297	1	Stud	
18	70003631	1	Brushholder Assembly (Not Shown)	
18A	70004171	1	Key	
18B	70001966	1	Bearing, Ball Radial (Located in Belt Tensioner Endbell)	
18B	70003708	1	Ring, Internal Retaining (Located in Belt Tensioner Endbell)	
18B	70003709	1	Ring, External Retaining (Located in Belt Tensioner Endbell)	
18C	70001953	1	Endbell, Belt Tensioner	
18D	70004169	1	Endbell, Brush Block	
18E	70004169	1	Shroud	
18E	See Note	NSS	Insulator, Endbell (Note: Not Available for Purchase)	

SECTION 2 - TURNTABLE

ITEM	PART NUMBER	QTY	DESCRIPTION	REV
18E	7027799	1	Block, Connector - 6 Position (Not Shown)	
18E	70002460	1	Nut, Brass (Attaches p/n 7027799 to Cover) (Not Shown)	
18E	7024485	1	Breaker, Circuit 30Amp (Not Shown)	
18E	70001696	1	Boot, Breaker (Not Shown)	
18E	7026626	1	Connector - 6 Position (Includes Seal) (Not Shown - Plugs into Item 39)	
18E	7026597	1	Connector, with Leads (Not Shown)	
18E	7026188	1	Clamp, Cable Options (Not Shown)	
18E	70004169	1	Plate, End Panel	
18E	70001974	1	Decal - Terminal Connections	
18F	70001973	1	Decal - Warning Moving Parts	
19	2820031	1	Heat Shrink	
20	3252764	1	Nameplate	
21	3311005	2	Nut #10	
22	3311405	AR	Nut 1/4	
23	3311505	AR	Nut 5/16	
24	3311605	AR	Nut 3/8	
25	3311801	1	Nut 1/2	
26	3573668	NLA	Bracket (Use p/n 0902888)	
27	3574163	1	Bracket	
28	3574523	2	Plate	
29	3580317	1	Pulley	
30	3580318	1	Pulley (60Hz Spec)	
30	3580319	1	Pulley (50Hz Spec)	
31	3580320	1	Pulley	
32	3740080	2	Relay	
33	3910606	8	Screw #6 x 3/8	
34	See Note	2	Gasket (50Hz Spec) (Supply Locally)	
34	3960422	2	Gasket (60Hz Spec)	
35	4032015	4	Bolt M10 x 55	
36		Ref	Cover, Receptacle Options:	
36	See Note	1	Cover (50Hz Spec) (Supply Locally)	
36A	4060700	1	Cover (Side Hinge) (60Hz Spec)	
36B	1001110873	1	Cover (Top Hinge) (60Hz Spec)	
37	4060802	1	Guard, Switch	
38		Ref	Cover, Receptacle Options:	
38	See Note	1	Cover (50Hz Spec) (Supply Locally)	
38A	4061043	1	Cover (Side Hinge) (60Hz Spec)	
38B	1001110872	1	Cover (Top Hinge) (60Hz Spec)	
39	4300157	1	Stud	
40	4360336	1	Switch, Toggle	
41	See Note	1	Connector, Strain Relief (50Hz Spec) (Supply Locally)	
41	4460051	1	Connector, Strain Relief (60Hz Spec)	
42	See Note	1	Connector, Strain Relief (50Hz Spec) (Supply Locally)	
42	4460071	1	Connector, Strain Relief (60Hz Spec)	
43	See Note	1	Receptacle (50Hz Spec) (Supply Locally)	
43	4460346	1	Receptacle (60Hz Spec)	
44	See Note	1	Receptacle, Female Twist-Lock (50Hz Spec) (Supply Locally)	
44	4460958	1	Receptacle, Female Twist-Lock (60Hz Spec)	
45	4711400	8	Washer 1/4	
45	4751400	AR	Washer 1/4	
46	4711500	AR	Washer 5/16	

ITEM	PART NUMBER	QTY	DESCRIPTION	REV
47	4711600	AR	Washer 3/8	
48	4711800	3	Washer 1/2	
49	4751000	4	Washer #10	
50	4761500	4	Washer 5/16	
51	4791400	1	Washer 1/4	
52	4922925	1	Harness, Generator	
52	4460225	1	Plug, Male - 6 Position (Plugs into Generator)	
52	See Note	NSS	Socket, Female (Use with 4460225)	
52	See Note	NSS	Seal, Plug (Use with 4460225)	
52	See Note	NSS	Seal, Interface (Use with 4460225)	
54	0771415	1	Bolt M14 x 35 Grade 10.9	
		Ref	**JUNCTION BOX ASSEMBLY**	
	0861567	Ref	**50Hz Spec**	B
	0861542	Ref	**60Hz Spec**	D
101	0861541	1	Box, Junction	
102	1060494	2 ft/.6m	Cable, Electrical - 12/3 (60Hz Spec Only)	
103	1060708	2.5 ft/ 0.8m	Cable, Electrical - 10/3 (60Hz Spec Only)	
104	1705376	1	Decal - Wiring Schematic	
105	3300396	1	Cover, Fuse	
106	3310601	2	Nut 6	
107	1060343	1.5 ft/ 0.5m	Cable, Electrical - 10/4 (60Hz Spec Only)	
109	3910610	2	Bolt 6 x 5/8	
110	4360070	1	Circuit Breaker - 15Amp	
116	4460425	2	Strain Relief, Terminal	
116	3520192	2	Plug (50Hz Spec Only)	
117	4460426	2	Connector, Strain Relief	
121	4750600	4	Washer, #6	
122	4760600	2	Washer #6	
125	1671092	1	Cover (60Hz Spec Only)	
126	4460963	1	Connector	
127	3520189	1	Plug (50Hz Spec Only)	
128	1001121340	1	Terminal Block Assembly (See Items 401-410 for Breakdown)	
		Ref	**DECAL INSTALLATIONS**	
	0272589	Ref	**50Hz Spec**	A
	0273380	Ref	**60Hz Spec**	B
202		Ref	Decal - 240V - 3 Phase Options:	
202	1705461	1	50Hz Spec	
202	1705375	1	60Hz Spec	
203		Ref	Decal - Hazardous Voltage Options:	
203	1705489	3	50Hz Spec	
203	1705387	3	60Hz Spec	
204	1705460	2	Decal - SkyPower	
	4933264	Ref	**ELECTRICAL DIAGRAM COMPONENTS**	C
301	4922757	Ref	Generator Harness Options (See ELECTRICAL SECTION for Breakdown):	3-C
301A	4460374	2	Plug, Sealed Relay	
301A	4460375	7	Terminal	
301B	4460967	1	Plug, Male - 3 Position	
301B	4460465	1	Socket, Female	
301C	2400060	1	Fuseholder (Not Shown)	

SECTION 2 - TURNTABLE

ITEM	PART NUMBER	QTY	DESCRIPTION	REV
301C	2400064	1	Fuse - 5Amp (Not Shown)	
304	4922641	1	Switch Harness	
		Ref	**TERMINAL BLOCK ASSEMBLY**	
	NPN	Ref	**Gray Terminal Block Assembly (Complete Assembly Not Available - Purchase Individual Components)**	
	1001121340	Ref	**Tan Terminal Block Assembly**	A
401		Ref	Marker Strip #1 Options:	
401	4460411	2	Gray Terminal Block Assembly	
401	70002818	2	Tan Terminal Block Assembly	
402		Ref	Marker Strip #2 Options:	
402	4460412	AR	Gray Terminal Block Assembly	
402	70002819	4	Tan Terminal Block Assembly	
403		Ref	Marker Strip #3 Options:	
403	4460413	2	Gray Terminal Block Assembly	
403	70002820	2	Tan Terminal Block Assembly	
404		Ref	Marker Strip #4 Options:	
404	4460414	2	Gray Terminal Block Assembly	
404	70002821	2	Tan Terminal Block Assembly	
405		Ref	Marker Strip #5 Options:	
405	4460415	AR	Gray Terminal Block Assembly	
405	70002822	4	Tan Terminal Block Assembly	
406		Ref	Terminal, End Barrier Options:	
406	4460956	1	Gray Terminal Block Assembly	
406	70002823	1	Tan Terminal Block Assembly	
407		Ref	Terminal, End Block Options:	
407	4460607	AR	Gray Terminal Block Assembly	
407	70002824	2	Tan Terminal Block Assembly	
408		Ref	Terminal, Block Options:	
408	4460957	7	Gray Terminal Block Assembly	
408	70002825	7	Tan Terminal Block Assembly	
409		Ref	Terminal, Cross Connector Jumper Options:	
409	4461001	2	Gray Terminal Block Assembly	
409	70002826	2	Tan Terminal Block Assembly	
410	3641533	1	Rail, Relay	

FIGURE 2-39. 7500W GENERATOR INSTALLATION - FORD ENGINE MACHINES (USA BUILT MACHINES)

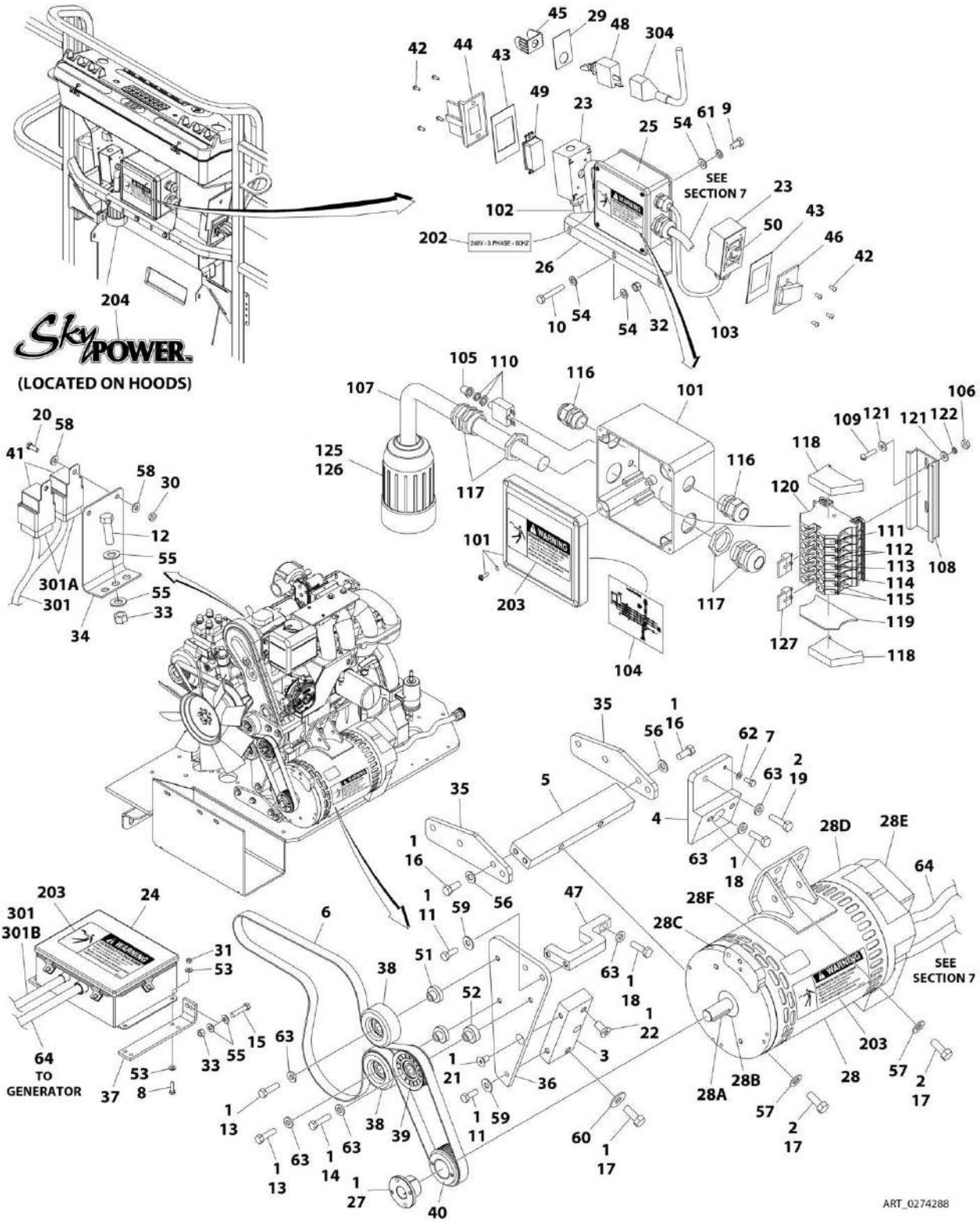

FIGURE 2-39. 7500W GENERATOR INSTALLATION - FORD ENGINE MACHINES (USA BUILT MACHINES)

ITEM	PART NUMBER	QTY	DESCRIPTION	REV
	0274288	Ref	**7500W GENERATOR INSTALLATION - FORD ENGINE MACHINES (USA BUILT MACHINES)**	B
1	0100011	AR	Compound, Locking	
2	0100019	AR	Compound, Locking	
3	0363097	1	Bar, Pulley Mount	
4	0363201	1	Bar, Generator Mount (Top)	
5	0363202	1	Bar, Generator Mount (Bottom)	
6	0480131	1	Belt	
7	0641405	1	Bolt 1/4 x 5/8	
8	0641408	4	Bolt 1/4 x 1	
9	0641505	4	Bolt 5/16 x 5/8	
10	0641516	3	Bolt 5/16 x 2	
11	0641608	3	Bolt 3/8 x 1	
12	0641610	1	Bolt 3/8 x 1-1/4	
13	0641611	2	Bolt 3/8 x 1-3/8	
14	0641612	1	Bolt 3/8 x 1-1/2	
15	0641614	2	Bolt 3/8 x 1-3/4	
16	0641708	8	Bolt 7/16 x 1	
17	0641810	5	Bolt 1/2 x 1-1/4	
18	0701015	2	Bolt M10 x 35	
19	0701016	1	Bolt M10 x 40	
20	0721004	2	Bolt #10 x 1/2	
21	0741606	1	Screw, Countersunk 3/8 x 3/4	
22	0741808	1	Screw, Countersunk 1/2 x 1	
23	0860038	2	Box, Switch	
24	0861538	1	Control Box Assembly	
24	7024488	1	Card, Circuit - Generator Power	
24	See Note	NSS	Fuse (Note: Not Available - Purchase Locally)	
24	7024489	1	Card, Circuit - Control	
24	70000619	1	Harness, Circuit Card	
25	0861542	1	Junction Box Assembly (See Items 101-126 for Breakdown)	
26	0902888	1	Bracket	
27	0962520	1	Bushing	
28	2460048	1	Generator Assembly	
28	70001100	1	Rotor (Includes p/n 70001384 & 70000863) (Not Shown)	
28	70001384	1	Bearing, Ball Radial (Not Shown)	
28	70000863	1	Fan (Not Shown)	
28	70002088	1	Stator (Not Shown)	
28	70002297	1	Stud	
28	70003631	1	Brushholder Assembly (Not Shown)	
28A	70004171	1	Key	
28B	70001966	1	Bearing, Ball Radial (Located in Belt Tensioner Endbell)	
28B	70003708	1	Ring, Internal Retaining (Located in Belt Tensioner Endbell)	
28B	70003709	1	Ring, External Retaining (Located in Belt Tensioner Endbell)	
28C	70001953	1	Endbell, Belt Tensioner	
28D	70004169	1	Endbell, Brush Block	
28E	70004169	1	Shroud	
28E	See Note	NSS	Insulator, Endbell (Note: Not Available for Purchase)	
28E	7027799	1	Block, Connector - 6 Position (Not Shown)	

SECTION 2 - TURNTABLE

ITEM	PART NUMBER	QTY	DESCRIPTION	REV
28E	70002460	1	Nut, Brass (Attaches p/n 7027799 to Cover) (Not Shown)	
28E	7024485	1	Breaker, Circuit 30Amp (Not Shown)	
28E	70001696	1	Boot, Breaker (Not Shown)	
28E	7026626	1	Connector - 6 Position (Includes Seal) (Not Shown - Plugs into Item 39)	
28E	7026597	1	Connector, with Leads (Not Shown)	
28E	7026188	1	Clamp, Cable Options (Not Shown)	
28E	70004169	1	Plate, End Panel	
28E	70001974	1	Decal - Terminal Connections	
28F	70001973	1	Decal - Warning Moving Parts	
29	3252764	1	Nameplate	
30	3311005	2	Nut #10	
31	3311405	4	Nut 1/4	
32	3311505	3	Nut 5/16	
33	3311605	3	Nut 3/8	
34	3574163	1	Bracket	
35	3574224	2	Plate, Gusset Generator Mount	
36	3574225	1	Plate, Pulley Mounting	
37	3574523	2	Plate, Control Box Mounting	
38	3580312	2	Pulley, Idler	
39	3580313	1	Pulley, Idler	
40	3580314	1	Pulley, Drive	
41	3740080	2	Relay	
42	3910606	8	Screw #6 x 3/8	
43	3960422	2	Gasket	
44	4060700	1	Cover, Receptacle	
45	4060802	1	Guard, Switch	
46	4061043	1	Cover, Receptacle	
47	4340738	1	Support, Idler Pulley	
48	4360336	1	Switch	
49	4460346	1	Receptacle	
50	4460958	1	Receptacle, Female Twist-Lock	
51	4568734	2	Spacer, Tube (Idler Pulley Non-Grooved)	
52	4568735	1	Spacer, Tube (Idler Pulley Grooved)	
53	4711400	8	Washer 1/4	
54	4711500	10	Washer 5/16	
55	4711600	6	Washer 3/8	
56	4711700	8	Washer 7/16	
57	4711800	4	Washer 1/2	
58	4751000	4	Washer #10	
59	4751600	3	Washer 3/8	
60	4751800	1	Washer 1/2	
61	4761500	4	Washer 5/16	
62	4791400	1	Washer 1/4	
63	4891600	6	Washer 3/8	
64	4922925	1	Harness, Generator	
64	4460225	1	Plug, Male - 6 Position (Plugs into Generator)	
64	See Note	NSS	Socket, Female (Use with 4460225)	
64	See Note	NSS	Seal, Plug (Use with 4460225)	
64	See Note	NSS	Seal, Interface (Use with 4460225)	
	0861542	Ref	**JUNCTION BOX ASSEMBLY**	C
101	0861541	1	Box, Junction	

ITEM	PART NUMBER	QTY	DESCRIPTION	REV
102	1060494	2 ft/0.6m	Cable, Electrical 12/3	
103	1060708	2.5 ft/ 0.8m	Cable, Electrical 10/3	
104	1705376	1	Decal - Wiring Schematic	
105	3300396	1	Cover, Fuse	
106	3310601	2	Nut 6	
107	1060343	1.5 ft/ 0.5m	Cable, Electrical 10/4	
108	3640986	1	Rail, Relay **(SN 0300065080 through 0300072910)**	
108	3641533	1	Rail, Relay **(SN 0300072911 to Present)**	
109	3910610	2	Bolt 6-32NC x 5/8	
110	4360070	1	Circuit Breaker - 15Amp	
111	4460411	2	Marker Strip #1	
112	4460412	4	Marker Strip #2	
113	4460413	2	Marker Strip #3	
114	4460414	2	Marker Strip #4	
115	4460415	4	Marker Strip #5	
116	4460425	2	Strain Relief, Terminal	
117	4460426	2	Connector, Strain Relief	
118	4460607	2	Terminal, End Stop	
119	4460956	1	Terminal, End Barrier	
120	4460957	7	Terminal, Block	
121	4750600	4	Washer #6	
122	4760600	2	Washer #6	
125	1671092	1	Cover	
126	4460963	1	Connector	
127	4461001	2	Connector, Terminal **(SN 0300072911 to Present)**	
	0273380	Ref	**DECAL INSTALLATION**	B
202	1705375	1	Decal - 240V - 3 Phase - 60Hz	
203	1705387	3	Decal - Hazardous Voltage	
204	1705460	2	Decal - SkyPower	
	4933316	Ref	**ELECTRICAL DIAGRAM COMPONENTS**	1-A
301	4923199	Ref	Generator Harness Options (See ELECTRICAL SECTION for Breakdown):	1-A
301A	4460374	2	Plug, Sealed Relay	
301A	4460375	7	Terminal	
301B	4460967	1	Plug, Male - 3 Position	
301B	4460465	3	Socket, Female	
301C	2400060	1	Fuseholder (Not Shown)	
301C	2400064	1	Fuse - 5Amp (Not Shown)	
304	4922641	1	Switch Harness	

FIGURE 2-40. 7500W GENERATOR INSTALLATION - GM ENGINE MACHINES (USA BUILT MSCHINES)

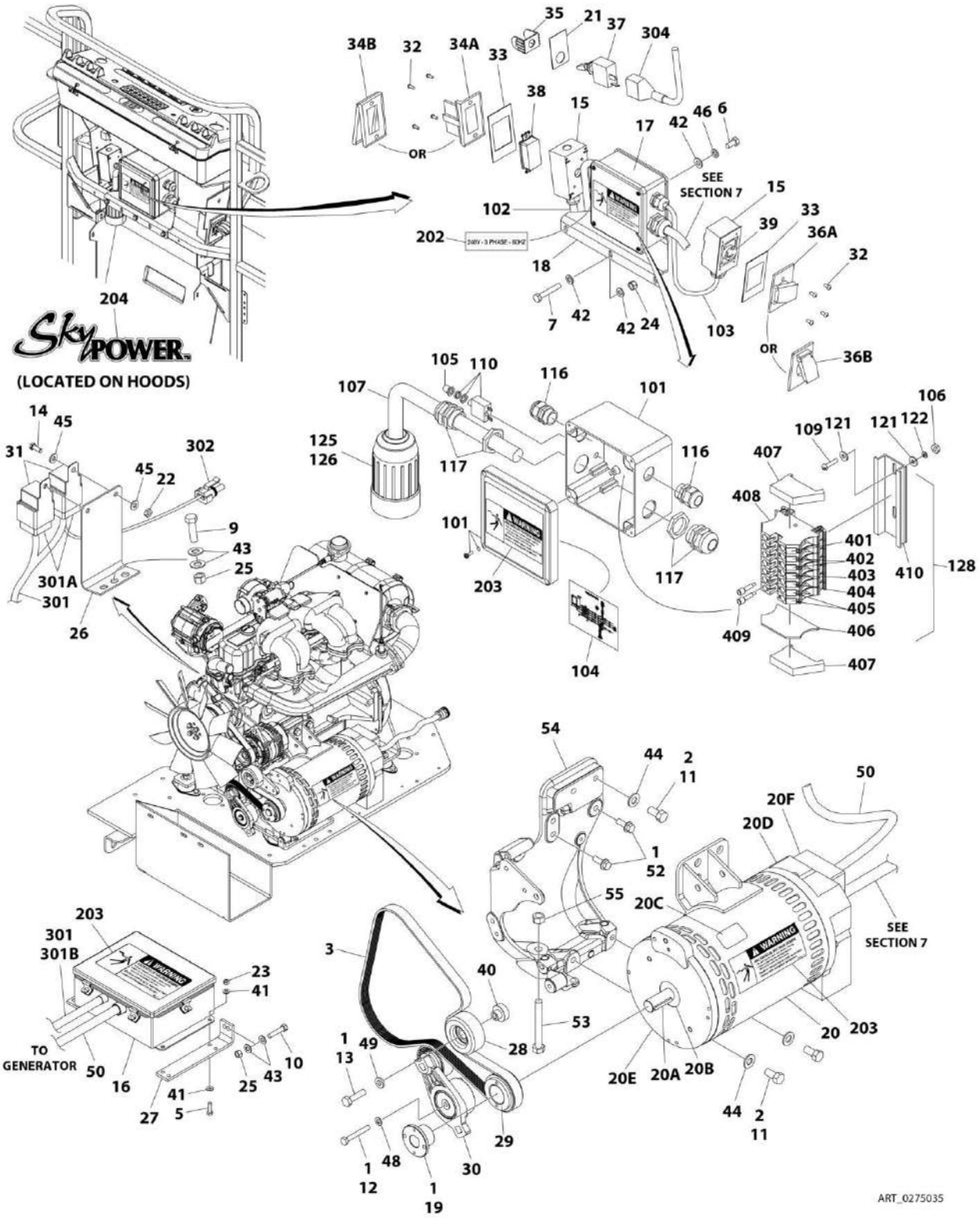

FIGURE 2-40. 7500W GENERATOR INSTALLATION - GM ENGINE MACHINES (USA BUILT MSCHINES)

ITEM	PART NUMBER	QTY	DESCRIPTION	REV
	0275035	Ref	**7500W GENERATOR INSTALLATION - GM ENGINE MACHINES (USA BUILT MSCHINES)**	G
1	0100011	AR	Compound, Locking	
2	0100019	AR	Compound, Locking	
3	0480142	1	Belt, Generator	
5	0641408	4	Bolt 1/4 x 1	
6	0641405	4	Bolt 1/4 x 5/8	
7	0641516	3	Bolt 5/16 x 2	
9	0641610	1	Bolt 3/8 x 1-1/4	
10	0641614	2	Bolt 3/8 x 1-3/4	
11	0641808	4	Bolt 1/2 x 1	
12	0700820	1	Bolt M8 x 60	
13	0701016	1	Bolt, Metric M10 x 40mm	
14	0721004	2	Bolt #10 x 1/2	
15	0860038	2	Box, Switch	
16	0861538	1	Control Box Assembly	
16	7024488	1	Card, Circuit - Generator Power	
16	See Note	NSS	Fuse (Note: Not Available - Purchase Locally)	
16	7024489	1	Card, Circuit - Control	
16	70000619	1	Harness, Circuit Card	
17	0861542	1	Junction Box Assembly (See Items 101-128 for Breakdown)	
18	0902888	1	Bracket, Box Mounting	
19	0962520	1	Bushing, Split Taper	
20	2460048	1	Generator Assembly	
20	70003631	1	Brushholder Assembly (Not Shown) (was p/n 7024484)	
20	7024485	1	Breaker, Circuit 30Amp (Not Shown)	
20	70001696	1	Boot, Breaker (was p/n 7024486 - Not Shown)	
20	70001966	1	Bearing, Ball Radial (Located In Belt Tensioner Endbell - Not Shown)	
20	7027799	1	Block, Connector - 6 Position (Not Shown)	
20	7026626	1	Connector - 6 Position with Seal (Not Shown)	
20	70002460	6	Nut, Brass (Attaches p/n 7027799 to Cover) (Not Shown)	
20	7026188	1	Clamp, Cable (Not Shown)	
20	7026597	1	Connector, with Leads (Not Shown)	
20	70002088	1	Stator (Not Shown)	
20	70004169	1	Panel, End (Not Shown) (was p/n 70002255)	
20	70001974	1	Decal - Terminal Connections (Not Shown)	
20	70000863	1	Fan (Not Shown)	
20	70002297	4	Stud (Not Shown)	
20A	70004171	1	Key (was p/n 7024561)	
20A	70001100	1	Armature, Generator (Includes Radial Ball Bearing on End with Brushes and Fan)	
20A	70001384	1	Bearing, Ball Radial	
20B	70001966	1	Bearing, Radial Ball	
20B	70003708	1	Ring, Internal Retaining (Located in Belt Tensioner Endbell)	
20B	70003709	1	Ring, External Retaining (Located in Belt Tensioner Endbell)	
20C	70001973	1	Decal - Warning Moving Parts	
20D	70004169	1	Endbell, Brush Block (was p/n 70001385)	
20E	70001953	1	Endbell, Belt Tensioner	

SECTION 2 - TURNTABLE

ITEM	PART NUMBER	QTY	DESCRIPTION	REV
20F	70004169	1	Endbell, Shroud Assembly (was p/n 70002290)	
21	3252764	1	Nameplate	
22	3311005	2	Nut #10	
23	3311405	4	Nut 1/4	
24	3311505	3	Nut 5/16	
25	3311605	3	Nut 3/8	
26	3574163	1	Bracket	
27	3574523	2	Plate	
28	3580312	1	Pulley, Idler	
29	3580314	1	Pulley, Drive Grooved	
30	3580348	1	Tensioner, Belt with Pulley	
31	3740080	2	Relay	
32	3910606	8	Screw #6 x 3/8	
33	3960422	2	Gasket	
34		Ref	Cover, Receptacle Options:	
34A	4060700	1	Cover (Side Hinge)	
34B	1001110873	1	Cover (Top Hinge)	
35	4060802	1	Guard, Switch	
36		Ref	Cover, Receptacle Options:	
36A	4061043	1	Cover (Side Hinge)	
36B	1001114872	1	Cover (Top Hinge)	
37	4360336	1	Switch, Toggle	
38	4460346	1	Receptacle	
39	4460958	1	Receptacle, Female Twist-Lock	
40	4568735	1	Tube, Spacer Pulley Grooved	
41	4711400	8	Washer 1/4	
42	4711500	10	Washer 5/16	
43	4711600	6	Washer 3/8	
44	4711800	4	Washer 1/2	
45	4751000	4	Washer #10	
46	4761500	4	Washer 5/16	
48	4811900	1	Washer M8	
49	4891600	1	Washer 3/8 Hardened	
50	4922925	1	Harness, Generator	
50	4460225	1	Plug, Male - 6 Position (Plugs into Generator)	
50	See Note	NSS	Socket, Female (Use with 4460225)	
50	See Note	NSS	Seal, Plug (Use with 4460225)	
50	See Note	NSS	Seal, Interface (Use with 4460225)	
52	0811608	4	Screw 3/8 x 1	
53	0641832	1	Bolt 1/2 x 4	
54	1001141181	1	Support	
55	3311805	1	Nut 1/2	
	0861542	Ref	**JUNCTION BOX ASSEMBLY**	D
101	0861541	1	Box, Junction	
102	1060494	2 ft/0.6m	Cable, Electrical 12/3	
103	1060708	2.5 ft/ 0.8m	Cable, Electrical 10/3	
104	1705376	1	Decal - Wiring Schematic	
105	3300396	1	Cover, Fuse	
106	3310601	2	Nut 6-32NC	
107	1060343	1.5 ft/ 0.5m	Cable, Electrical 10/4	

ITEM	PART NUMBER	QTY	DESCRIPTION	REV
109	3910610	2	Bolt #6 x 5/8	
110	4360070	1	Circuit Breaker - 15Amp	
116	4460425	2	Strain Relief, Terminal	
117	4460426	2	Connector, Strain Relief	
121	4750600	4	Washer #6	
122	4760600	2	Washer #6	
125	1671092	1	Cover	
126	4460963	1	Connector	
128		Ref	Terminal Block Assembly Options (See Items 401-410 for Breakdown):	
128	NPN	1	Gray Terminal Block Assembly	
128	1001121340	1	Tan Terminal Block Assembly	
	0273380	Ref	**DECAL INSTALLATION**	B
202	1705375	1	Decal - 240V - 3 Phase	
203	1705387	3	Decal - Hazardous Voltage	
204	1705460	2	Decal - SkyPower	
	4933349	Ref	**ELECTRICAL DIAGRAM COMPONENTS**	B
301	4923420	1	Generator Harness	A
301A	4460374	1	Plug, Sealed Relay	
301A	4460375	8	Terminal	
301B	4460967	1	Plug, Male - 3 Position	
301B	4460465	3	Socket, Female	
301C	2400060	2	Fuseholder (Not Shown)	
301C	2400064	1	Fuse - 5Amp (Not Shown)	
302	4460742	1	Connector - 2 Position	
302	4460743	2	Socket, Female	
302	4460458	2	Seal	
304	4922641	1	Switch Harness	
		Ref	**TERMINAL BLOCK ASSEMBLY**	
	NPN	Ref	**Gray Terminal Block Assembly (Complete Assembly Not Available - Purchase Individual Components)**	
	1001121340	Ref	**Tan Terminal Block Assembly**	A
401		Ref	Marker Strip #1 Options	
401	4460411	2	Gray Terminal Block Assembly	
401	70002818	2	Tan Terminal Block Assembly	
402		Ref	Marker Strip #2 Options:	
402	4460412	AR	Gray Terminal Block Assembly	
402	70002819	4	Tan Terminal Block Assembly	
403		Ref	Marker Strip #3 Options:	
403	4460413	2	Gray Terminal Block Assembly	
403	70002820	2	Tan Terminal Block Assembly	
404		Ref	Marker Strip #4 Options:	
404	4460414	2	Gray Terminal Block Assembly	
404	70002821	2	Tan Terminal Block Assembly	
405		Ref	Marker Strip #5 Options:	
405	4460415	AR	Gray Terminal Block Assembly	
405	70002822	4	Tan Terminal Block Assembly	
406		Ref	Terminal, End Barrier Options:	
406	4460956	1	Gray Terminal Block Assembly	
406	70002823	1	Tan Terminal Block Assembly	
407		Ref	Terminal, End Block Options:	
407	4460607	2	Gray Terminal Block Assembly	

SECTION 2 - TURNTABLE

ITEM	PART NUMBER	QTY	DESCRIPTION	REV
407	70002824	2	Tan Terminal Block Assembly	
408		Ref	Terminal, Block Options:	
408	4460957	AR	Gray Terminal Block Assembly	
408	70002825	7	Tan Terminal Block Assembly	
409		Ref	Terminal, Cross Connector Jumper Options:	
409	4461001	2	Gray Terminal Block Assembly	
409	70002826	2	Tan Terminal Block Assembly	
410	3640986	1	Rail, Relay **(SN 0300065080 through 0300072910)**	
410	3641533	1	Rail, Relay **(SN 0300072911 to Present)**	

FIGURE 2-41. 7500W GENERATOR INSTALLATION - PERKINS ENGINE MACHINES (USA BUILT MACHINES)

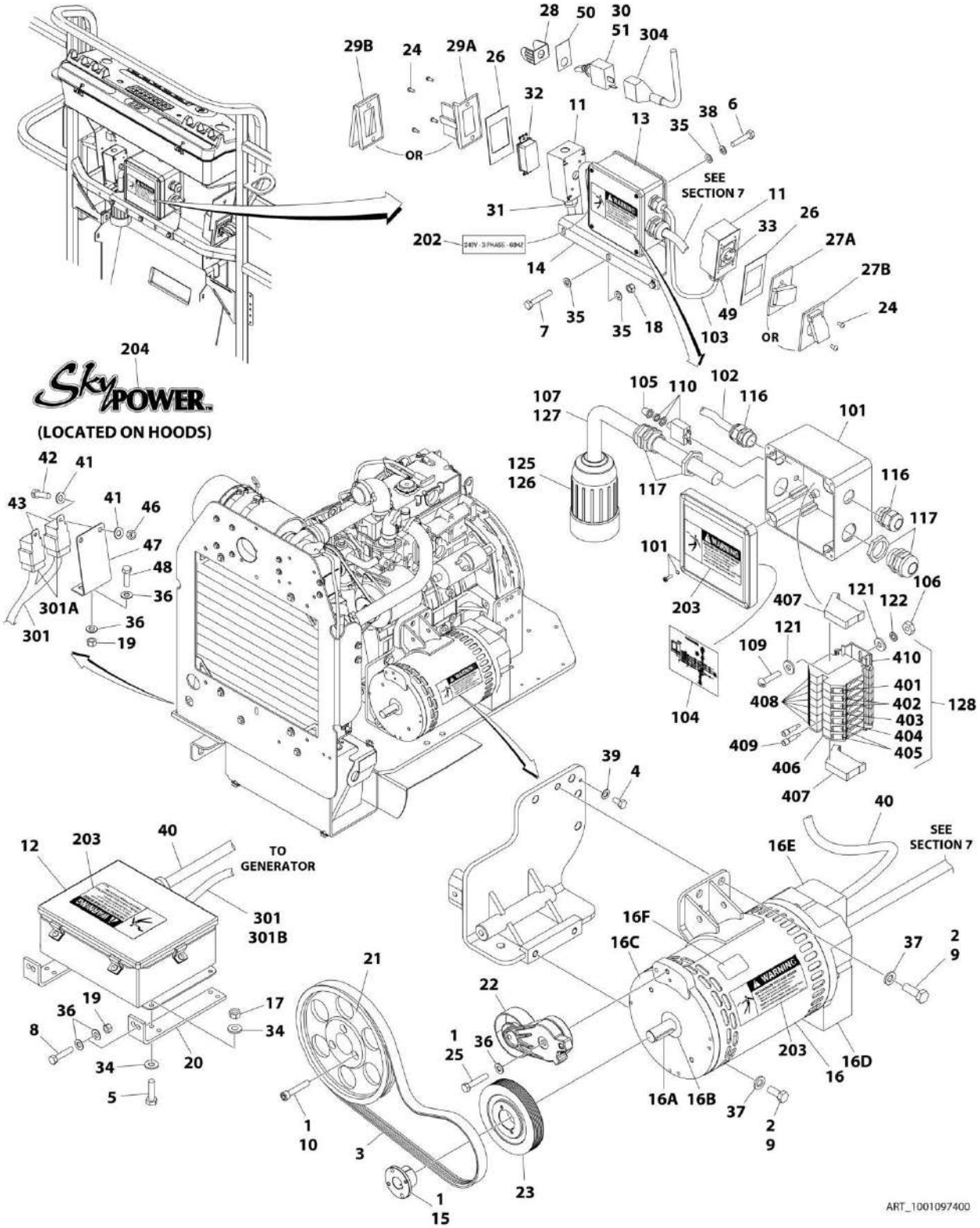

FIGURE 2-41. 7500W GENERATOR INSTALLATION - PERKINS ENGINE MACHINES (USA BUILT MACHINES)

ITEM	PART NUMBER	QTY	DESCRIPTION	REV
		Ref	**7500W GENERATOR INSTALLATION - PERKINS ENGINE MACHINES (USA BUILT MACHINES)**	
		Ref	**PERKINS Engine Machines without UGM:**	
	1001097401	Ref	**50Hz Spec**	D
	1001097400	Ref	**60Hz Spec**	D
1	0100011	AR	Compound, Locking	
2	0100019	AR	Compound, Locking	
3	0480129	1	Belt (60Hz Spec)	
3	0480126	1	Belt (50Hz Spec)	
4	0641403	1	Bolt 1/4 x 3/8	
5	0641408	4	Bolt 1/4 x 1	
6	0641508	4	Bolt 5/16 x 5/8	
7	0641516	3	Bolt 5/16 x 2	
8	0641614	2	Bolt 3/8 x 1-3/4	
9	0641808	4	Bolt 1/2 x 1	
10	0701217	3	Bolt M12 x 45	
11	0860038	2	Box, Switch	
12	0861572	1	Control Box Assembly (50Hz Spec)	
12	0861538	1	Control Box Assembly (60Hz Spec)	
12	7024488	1	Card, Circuit - Generator Power	
12	See Note	1	Fuse (Note: Not Available - Purchase Locally)	
12	7024489	1	Card, Circuit - Control	
		Ref	**Note: Same Circuit Card (P/N 7024489) is used for both 60Hz and 50Hz. When replacing card, rocker switch on card must be set for required application.**	
12	70000619	1	Harness, Circuit Card	
13	0861542	1	Junction Box Assembly (60Hz Spec) (See Items 101-128 for Breakdown)	
13	0861567	1	Junction Box Assembly (50Hz Spec) (See Items 101-128 for Breakdown)	
14	0902888	1	Bracket	
15	0962520	1	Bushing	
16	2460048	1	Generator Assembly	
16	70001100	1	Rotor (Includes p/n 70001384 & 70000863) (Not Shown)	
16	70001384	1	Bearing, Ball Radial (Not Shown)	
16	70000863	1	Fan (Not Shown)	
16	70002088	1	Stator (Not Shown)	
16	70002297	1	Stud	
16	70003631	1	Brushholder Assembly (Not Shown)	
16A	70004171	1	Key	
16B	70001966	1	Bearing, Ball Radial (Located in Belt Tensioner Endbell)	
16B	70003708	1	Ring, Internal Retaining (Located in Belt Tensioner Endbell)	
16B	70003709	1	Ring, External Retaining (Located in Belt Tensioner Endbell)	
16C	70001953	1	Endbell, Belt Tensioner	
16D	70004169	1	Endbell, Brush Block	
16E	70004169	1	Shroud	
16E	See Note	NSS	Insulator, Endbell (Note: Not Available for Purchase)	
16E	7027799	1	Block, Connector 6 Position (Not Shown)	
16E	70002460	1	Nut, Brass (Attaches p/n 7027799 to Cover) (Not Shown)	
16E	7024485	1	Breaker, Circuit 30Amp (Not Shown)	

SECTION 2 - TURNTABLE

ITEM	PART NUMBER	QTY	DESCRIPTION	REV
16E	70001696	1	Boot, Breaker (Not Shown)	
16E	7026626	1	Connector - 6 Position (Includes Seal) (Not Shown - Plugs into Item 39)	
16E	7026597	1	Connector, with Leads (Not Shown)	
16E	7026188	1	Clamp, Cable Options (Not Shown)	
16E	70004169	1	Plate, End Panel	
16E	70001974	1	Decal - Terminal Connections	
16F	70001973	1	Decal - Terminal Connections	
17	3311405	4	Nut 1/4	
18	3311505	3	Nut 5/16	
19	3311605	3	Nut 3/8	
20	3574523	2	Plate	
21	3580316	1	Pulley	
22	3580317	1	Pulley	
23	3580319	1	Pulley (50Hz Spec)	
23	3580318	1	Pulley (60Hz Spec)	
24	3910606	8	Screw #6 x 3/8	
25	0641618	1	Bolt 3/8 x 2-1/4	
26	3960422	2	Gasket	
27		Ref	Cover, Receptacle Options:	
27A	4061043	1	Cover (Side Hinge)	
27B	1001110872	1	Cover (Top Hinge)	
28	4060802	1	Guard, Switch	
29		Ref	Cover, Receptacle Options:	
29A	4060700	1	Cover (Side Hinge)	
29B	1001110873	1	Cover (Top Hinge)	
30	4360336	1	Switch, Toggle	
31	4460071	1	Connector, Strain Relief	
32	4460346	1	Receptacle	
33	4460958	1	Receptacle, Female Twist-Lock	
34	4711400	8	Washer 1/4	
35	4711500	10	Washer 5/16	
36	4711600	7	Washer 3/8	
37	4711800	4	Washer 1/2	
38	4761500	4	Washer 5/16	
39	4791400	1	Washer 1/4	
40	4922925	1	Harness, Generator	
40	4460225	1	Plug, Male - 6 Position (Plugs into Generator)	
40	See Note	NSS	Socket, Female (Use with 4460225)	
40	See Note	NSS	Seal, Plug (Use with 4460225)	
40	See Note	NSS	Seal, Interface (Use with 4460225)	
41	4751000	4	Washer #10	
42	0721004	2	Bolt #10 x 1/2	
43	3740080	2	Relay	
46	3311005	2	Nut #10	
47	3574163	1	Bracket	
48	0641610	1	Bolt 3/8 x 1-1/4	
49	4460051	1	Connector, Strain Relief (50Hz Spec)	
49	4460071	1	Connector, Strain Relief (60Hz Spec)	
50	3252764	1	Nameplate (50Hz Spec)	
51	2820031	AR	Heat Shrink	
		Ref	**JUNCTION BOX ASSEMBLY**	

ITEM	PART NUMBER	QTY	DESCRIPTION	REV
	0861567	Ref	**50Hz Spec**	B
	0861542	Ref	**60Hz Spec**	D
101	0861541	1	Box, Junction	
102	See Note	NSS	Cable, Electrical 12/3 (50Hz Spec) (Supply Locally)	
102	1060494	2 ft/0.6m	Cable, Electrical 12/3 (60Hz Spec)	
103	See Note	NSS	Cable, Electrical 10/3 (50Hz Spec) (Supply Locally)	
103	1060708	2.5 ft/ 0.8m	Cable, Electrical 10/3 (60Hz Spec)	
104	1705376	1	Decal - Wiring Schematic	
105	3300396	1	Cover, Fuse	
106	3310601	2	Nut 6	
107	1060343	1.5 ft/ 0.5m	Cable, Electrical 10/4 (60Hz Spec Only)	
109	3910610	2	Bolt 6-32NC x 5/8	
110	4360070	1	Circuit Breaker - 15Amp	
116	4460425	2	Strain Relief, Terminal	
117	4460426	2	Connector, Strain Relief	
121	4750600	4	Washer, #6	
122	4760600	2	Washer #6	
125	1671092	1	Cover (60Hz Spec Only)	
126	4460963	1	Connector (60Hz Spec Only)	
127	3520189	1	Plug (50Hz Spec Only)	
128	NPN	1	Gray Terminal Block Assembly (See Items 401-410 for Breakdown)	
128	1001121340	1	Tan Terminal Block Assembly (See Items 401-410 for Breakdown)	
		Ref	**DECAL INSTALLATION**	
	0272589	Ref	**50Hz Spec**	A
	0273380	Ref	**60 Hz Spec**	B
202	1705375	1	Decal - 240V - 3 Phase - 60Hz	
202	1705461	1	Decal - 240V - 3 Phase - 50Hz	
203	1705489	3	Decal - Hazardous Voltage (50Hz Spec)	
203	1705387	3	Decal - Hazardous Voltage (60Hz Spec)	
204	1705460	2	Decal - SkyPower	
	4933264	Ref	**ELECTRICAL DIAGRAM COMPONENTS**	C
301	4922757	Ref	Generator Harness Options (See ELECTRICAL SECTION for Breakdown):	3-C
301A	4460374	2	Plug, Sealed Relay	
301A	4460375	7	Terminal	
301B	4460967	1	Plug, Male - 3 Position	
301B	4460465	3	Socket, Female	
301C	2400060	1	Fuseholder (Not Shown)	
301C	2400064	1	Fuse - 5Amp (Not Shown)	
304	4922641	1	Switch Harness	
		Ref	**TERMINAL BLOCK ASSEMBLY**	
	NPN	Ref	**Gray Terminal Block Assembly (Complete Assembly Not Available - Purchase Individual Components)**	
	1001121340	Ref	**Tan Terminal Block Assembly**	A
401		Ref	Marker Strip #1 Options:	
401	4460411	2	Gray Terminal Block Assembly	
401	70002818	2	Tan Terminal Block Assembly	
402		Ref	Marker Strip #2 Options:	
402	4460412	AR	Gray Terminal Block Assembly	

SECTION 2 - TURNTABLE

ITEM	PART NUMBER	QTY	DESCRIPTION	REV
402	70002819	4	Tan Terminal Block Assembly	
403		Ref	Marker Strip #3 Options:	
403	4460413	2	Gray Terminal Block Assembly	
403	70002820	2	Tan Terminal Block Assembly	
404		Ref	Marker Strip #4 Options:	
404	4460414	2	Gray Terminal Block Assembly	
404	70002821	2	Tan Terminal Block Assembly	
405		Ref	Marker Strip #5 Options:	
405	4460415	AR	Gray Terminal Block Assembly	
405	70002822	4	Tan Terminal Block Assembly	
406		Ref	Terminal, End Barrier Options:	
406	4460956	1	Gray Terminal Block Assembly	
406	70002823	1	Tan Terminal Block Assembly	
407		Ref	Terminal, End Block Options:	
407	4460607	AR	Gray Terminal Block Assembly	
407	70002824	2	Tan Terminal Block Assembly	
408		Ref	Terminal, Block Options:	
408	4460957	7	Gray Terminal Block Assembly	
408	70002825	7	Tan Terminal Block Assembly	
409		Ref	Terminal, Cross Connector Jumper Options:	
409	4461001	2	Gray Terminal Block Assembly	
409	70002826	2	Tan Terminal Block Assembly	
410	3640986	1	Rail, Relay **(Prior to SN 0300072911)**	
410	3641533	1	Rail, Relay **(SN 0300072911 to Present)**	

FIGURE 2-42. 7500W GENERATOR INSTALLATION - PERKINS ENGINE MACHINES (BELGIUM BUILT MACHINES)

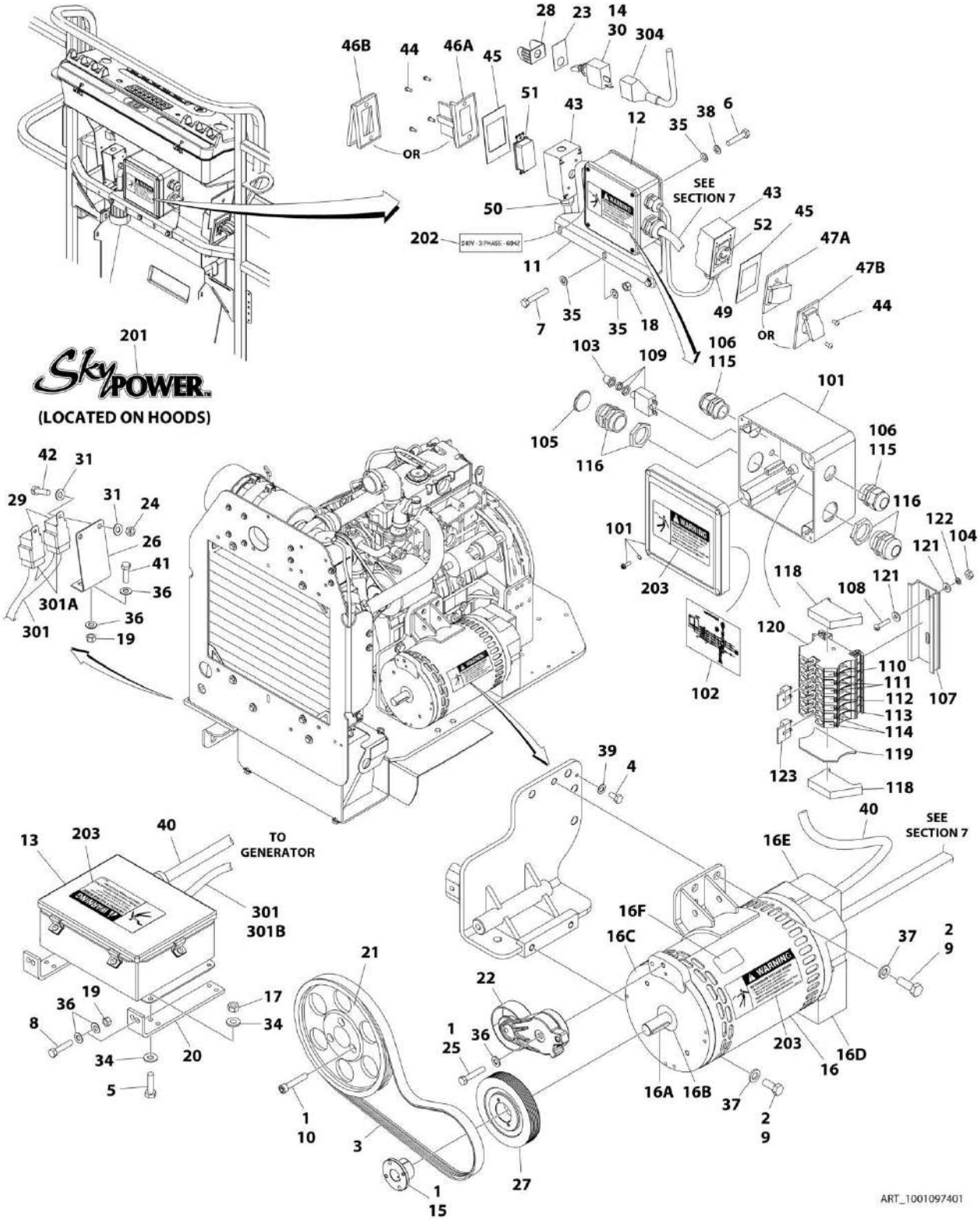

FIGURE 2-42. 7500W GENERATOR INSTALLATION - PERKINS ENGINE MACHINES (BELGIUM BUILT MACHINES)

ITEM	PART NUMBER	QTY	DESCRIPTION	REV
		Ref	**7500W GENERATOR INSTALLATION - PERKINS ENGINE MACHINES (BELGIUM BUILT MACHINES)**	
		Ref	**PERKINS Engine Machines without UGM:**	
	1001097401	Ref	**50Hz Spec (ANSI Export and Japanese Specs Only)**	D
	1001097583	Ref	**50Hz Spec (CE and Australian Specs Only)**	C
1	0100011	AR	Compound, Locking	
2	0100019	AR	Compound, Locking	
3	0480126	1	Belt	
4	0641403	1	Bolt 1/4 x 3/8	
5	0641408	4	Bolt 1/4 x 1	
6	0641508	4	Bolt 5/16 x 1	
7	0641516	3	Bolt 5/16 x 2	
8	0641614	2	Bolt 3/8 x 1-3/4	
9	0641808	4	Bolt 1/2 x 1	
10	0701217	3	Bolt M12 x 45	
11	0902888	1	Bracket	
12	0861567	1	Junction Box Assembly (See Items 101-123 for Breakdown)	
13	0861572	1	Control Box Assembly	
13	7024488	1	Card, Circuit - Generator Power	
13	See Note	1	Fuse (Note: Not Available - Purchase Locally)	
13	7024489	1	Card, Circuit - Control	
13	70000619	1	Harness, Circuit Card	
14	2820031	AR	Heat Shrink	
15	0962520	1	Bushing	
16	2460048	1	Generator Assembly	
16	70001100	1	Rotor (Includes p/n 70001384 & 70000863) (Not Shown)	
16	70001384	1	Bearing, Ball Radial (Not Shown)	
16	70000863	1	Fan (Not Shown)	
16	70002088	1	Stator (Not Shown)	
16	70002297	1	Stud	
16	70003631	1	Brushholder Assembly (Not Shown)	
16A	70004171	1	Key	
16B	70001966	1	Bearing, Ball Radial (Located in Belt Tensioner Endbell)	
16B	70003708	1	Ring, Internal Retaining (Located in Belt Tensioner Endbell)	
16B	70003709	1	Ring, External Retaining (Located in Belt Tensioner Endbell)	
16C	70001953	1	Endbell, Belt Tensioner	
16D	70004169	1	Endbell, Brush Block	
16E	70004169	1	Shroud	
16E	See Note	NSS	Insulator, Endbell (Note: Not Available for Purchase)	
16E	7027799	1	Block, Connector 6 Position (Not Shown)	
16E	70002460	1	Nut, Brass (Attaches p/n 7027799 to Cover) (Not Shown)	
16E	7024485	1	Breaker, Circuit 30Amp (Not Shown)	
16E	70001696	1	Boot, Breaker (Not Shown)	
16E	7026626	1	Connector, 6 Position (Includes Seal) (Not Shown - Plugs into Item 39)	
16E	7026597	1	Connector, with Leads (Not Shown)	
16E	7026188	1	Clamp, Cable Options (Not Shown)	
16E	70004169	1	Plate, End Panel	
16E	70001974	1	Decal - Terminal Connections	

ITEM	PART NUMBER	QTY	DESCRIPTION	REV
16F	70001973	1	Decal - Warning Moving Parts	
17	3311405	4	Nut 1/4	
18	3311505	3	Nut 5/16	
19	3311605	3	Nut 3/8	
20	3574523	2	Plate	
21	3580316	1	Pulley	
22	3580317	1	Pulley	
23	3252764	1	Nameplate	
24	3311005	2	Nut #10	
25	0641618	1	Bolt 3/8 x 2-1/4	
26	3574163	1	Bracket	
27	3580319	1	Pulley	
28	4060802	1	Guard, Switch	
29	3740080	2	Relay	
30	4360336	1	Switch, Toggle	
31	4751000	4	Washer #10	
34	4711400	8	Washer 1/4	
35	4711500	10	Washer 5/16	
36	4711600	7	Washer 3/8	
37	4711800	4	Washer 1/2	
38	4761500	4	Washer 5/16	
39	4791400	1	Washer 1/4	
40	4922925	1	Harness, Generator	
40	4460225	1	Plug, Male 6 Position (Plugs into Generator)	
40	See Note	NSS	Socket, Female (Use with 4460225)	
40	See Note	NSS	Seal, Plug (Use with 4460225)	
40	See Note	NSS	Seal, Interface (Use with 4460225)	
41	0641610	1	Bolt 3/8 x 1-1/4	
42	0721004	2	Bolt #10 x 1/2	
		Ref	**Note: Items #43-52 used with installation 1001097401.**	
43	0860038	2	Box, Switch	
44	3910606	8	Screw #6 x 3/8	
45	3960422	2	Gasket	
46		Ref	Cover, Receptacle Options:	
46A	4060700	1	Cover (Side Hinge)	
46B	1001110873	1	Cover (Top Hinge)	
47		Ref	Cover, Receptacle Options:	
47A	4061043	1	Cover (Side Hinge)	
47B	1001110872	1	Cover (Top Hinge)	
49	4460051	1	Connector, Strain Relief	
50	4460071	1	Connector, Strain Relief	
51	4460346	1	Receptacle	
52	4460958	1	**Receptacle, Female Twist-Lock**	
	0861567	Ref	**JUNCTION BOX ASSEMBLY**	B
101	0861541	1	Box, Junction	
102	1705376	1	Decal - Wiring Schematic	
103	3300396	1	Cover, Fuse	
104	3310601	2	Nut 6	
105	3520189	1	Plug	
106	3520192	2	Plug	
107	3640986	1	Rail, Relay **(Prior to SN 0300072911)**	

ITEM	PART NUMBER	QTY	DESCRIPTION	REV
107	3641533	1	Rail, Relay **(SN 0300072911 to Present)**	
108	3910610	2	Bolt 6-32 x 5/8	
109	4360070	1	Circuit Breaker - 15Amp	
110	4460411	2	Marker Strip #1	
111	4460412	4	Marker Strip #2	
112	4460413	2	Marker Strip #3	
113	4460414	2	Marker Strip #4	
114	4460415	4	Marker Strip #5	
115	4460425	2	Strain Relief, Terminal	
116	4460426	2	Connector, Strain Relief	
118	4460607	2	Terminal, End Block	
119	4460956	1	Terminal, End Barrier	
120	4460957	7	Terminal, Block	
121	4750600	4	Washer, #6	
122	4760600	2	Washer #6	
123	4461001	2	Terminal, Cross Connector Jumper	
	0272589	Ref	**DECAL INSTALLATION**	A
201	1705460	2	Decal - SkyPower	
202	1705461	1	Decal - 240V - 3 Phase	
203	1705489	3	Decal - Hazardous Voltage	
	4933264	Ref	**ELECTRICAL DIAGRAM COMPONENTS**	C
301	4922757	Ref	Generator Harness Options (See ELECTRICAL SECTION for Breakdown):	3-C
301A	4460374	2	Plug, Sealed Relay	
301A	4460375	7	Terminal	
301B	4460967	1	Plug, Male - 3 Position	
301B	4460465	3	Socket, Female	
301C	2400060	1	Fuseholder (Not Shown)	
301C	2400064	1	Fuse - 5Amp (Not Shown)	
304	4922641	1	Switch Harness	

SECTION 3 - BOOM

FIGURE 3-1. TOWER/MID BOOMS AND CYLINDERS INSTALLATION (USA BUILT MACHINES) (SN 0300065080 through 0300123999)

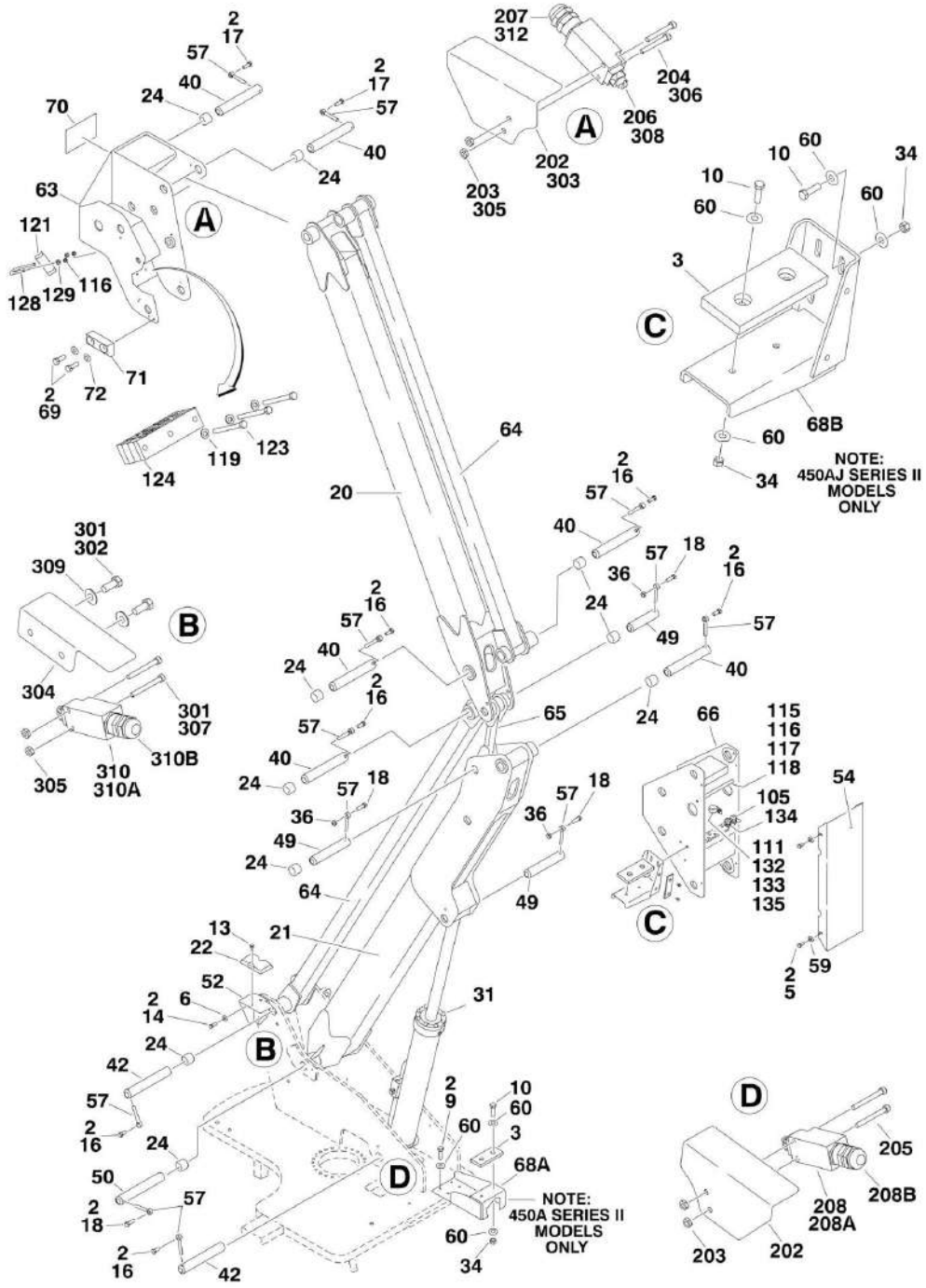

FIGURE 3-1. TOWER/MID BOOMS AND CYLINDERS INSTALLATION (USA BUILT MACHINES) (SN 0300065080 through 0300123999)

ITEM	PART NUMBER	QTY	DESCRIPTION	REV
		Ref	**USA Built Machines use SNs 03xxxxxxxx.**	
		Ref	**Belgium Built Machines use SNs 13xxxxxxxx.**	
		Ref	**TOWER BOOMS AND CYLINDERS INSTALLATIONS**	
	0271216	Ref	**450A Series II**	I
	1001097501	Ref	**450A Series II (Arctic Package)**	A
	0270839	Ref	**450AJ Series II**	L
	0275125	Ref	**450AJ Series II (Arctic Package)**	B
2	0100011	AR	Compound, Locking	
3	0561076	1	Block, Boom Rest	
5	0641505	4	Bolt 5/16in-18NC x 5/8in	
6	4751800	3	Flatwasher 1/2in Regular	
9	0641608	4	Bolt 3/8in-16NC x 1in	
10	0641610	AR	Bolt 3/8in-16NC x 1-1/4in	
13	0641806	2	Bolt 1/2in-13NC x 3/4in	
14	0641810	3	Bolt 1/2in-13NC x 1-1/4in	
16	0642012	6	Bolt 5/8in-11NC x 1-1/2in	
17	0642014	2	Bolt 5/8in-11NC x 1-3/4in	
18	0642016	4	Bolt 5/8in-11NC x 2in	
20	0801272	1	Boom, Mid	
21	0801273	1	Boom, Tower	
22	0940048	1	Bumper	
24	0961950	20	Bearing, Garmax	
31	1684070	1	Tower Lift Cylinder Assembly (See CYLINDER SECTION for Breakdown)	
34	3311605	AR	Locknut 3/8in-16NC	
36	3312005	3	Locknut 5/8in-11NC	
40	3422568	6	Pin	
42	3422664	2	Pin	
49	3422912	3	Pin	
50	3422913	1	Pin	
52	3572691	1	Bracket, Boom Rest	
54	3572826	1	Cover	
57	3841258	12	Keeper, Pin	
59	4751500	4	Flatwasher 5/16in Regular	
60	4751600	AR	Flatwasher 3/8in Regular	
63		Ref	Upright (Upper) Options:	
63	4846366	1	Upright (Upper)	
63	4846335	1	Upright (Upper)	
64	4846336	2	Link	
65	4846343	1	Link, Timing	
66	4846346	1	Upright (Lower)	
68		Ref	Rest, Boom Options:	
68A	3572750	1	Rest, Boom	
68B	4846428	1	Rest, Boom	
69	0641507	2	Bolt 5/16in-18NC x 7/8in	
70	1671013	1	Cover	
71	3340914	1	Pad	
72	4711500	2	Flatwasher 5/16in Thin	
73		Ref	Cable, Electrical 18/2 Options (Not Shown):	

ITEM	PART NUMBER	QTY	DESCRIPTION	REV
73	4922770	1	Without Arctic Package	
73	4923469	1	With Arctic Package	
		Ref	**BOOM CABLES AND CLAMPS INSTALLATIONS**	
	0271311	Ref	**450A Series II (ANSI/ANSI Export /CSA Specs)**	J
	0271310	Ref	**450A Series II (Australian/CE Specs)**	J
	0273279	Ref	**450A Series II (All Specs with SkyPower)**	C
	1001097502	Ref	**450A SERIES II (ALL SPECS WITH ARCTIC PACKAGE)**	A
	1001097503	Ref	**450A Series II (All Specs with Arctic Package and SkyPower)**	A
	0271122	Ref	**450AJ Series II (ANSI/ANSI Export /CSA Specs)**	J
	0271206	Ref	**450AJ Series II (Australian/CE Specs)**	J
	0273280	Ref	**450AJ Series II (All Specs with SkyPower)**	C
	0275116	Ref	**450AJ Series II (All Specs with Arctic Package)**	C
	0275786	Ref	**450AJ Series II (All Specs with Arctic Package and SkyPower)**	C
		Ref	**Note: For Additional Components See ELECTRICAL SECTION**	
105	4460425	1	Connector, Strain Relief	
111	4751400	2	Flatwasher 1/4in Regular	
113		Ref	Harness, Tower Boom Options (Not Shown - See ELECTRICAL SECTION):	
113	4922530	1	Without Arctic Package	
113	4923458	1	With Arctic Package	
115	3300420	1	Nut, Acorn 1/4in-20NC	
116	3311605	3	Locknut 3/8in-16NC	
117	3860096	1	Roller	
118	0630498	1	Bolt	
119	4711500	3	Flatwasher 5/16in Thin	
120		Ref	Tie-Strap Options (Not Shown):	
120	4240099	AR	Without Arctic Package	
120	4240018	AR	With Arctic Package	
121	4061032	2	Shield, Cable	
123	0641528	3	Bolt 5/16in-18NC x 3-1/2in	
124		Ref	Block, Clamp Options:	
124	0561460	1	All Machines Except Machines with Both Arctic Package and SkyPower	
124	1321695	1	Machines with Arctic Package Only and SkyPower Only	
127	0100011	AR	Compound, Locking	
128	1320300	1	Clamp, Hose	
129	4711600	2	Flatwasher 3/8in Thin	
130		Ref	Cable, Electrical (Not Shown - See ELECTRICAL SECTION)	
130		Ref	Machines without Arctic Package or SkyPower (12/3 AC Power Cable):	
130	1060494	NLA	ANSI/ANSI Export /CSA Specs (Use p/n 1060987) **(SN 0300065080 through 0300068439)**	
130	1060987	1	ANSI/ANSI Export /CSA Specs **(SN 0300068440 through 0300123999)**	
130	1060494	NLA	Australian/CE Specs (Use p/n 1060991) **(SN 0300065080 through 0300068439)**	
130	1060991	1	Australian/CE Specs **(SN 0300068440 through 0300123999)**	
130		Ref	Machines With SkyPower and/or Arctic Package:	
130	4922929	AR	With SkyPower Only (8/5 AC Power Cable)	
130	4923460	AR	With Arctic Package Only (12/3 AC Power Cable)	
130	4923615	AR	With Arctic Package and Sky Power (8/5 AC Power Cable) (Use P/N 4922857) **(SN 0300065080 through 0300121048)**	

ITEM	PART NUMBER	QTY	DESCRIPTION	REV
130	4922857	AR	With Arctic Package and Sky Power (8/5 AC Power Cable) **(SN 0300121049 through 0300123999)**	
132	0641408	1	Bolt 1/4in-20NC x 1in	
133	1320061	1	Clamp, Hose Only **(SN 0300104165 through 0300123999)**	
134		Ref	Connector, Strain Relief	
134	4460425	1	Terminal, Strain Relief **(SN 0300065080 through 0300104164)**	
134	1321692	1	Without Arctic Package **(SN 0300104165 through 0300123999)**	
134	1321692	1	With SkyPower only **(SN 0300104165 through 0300123999)**	
134	1321692	1	With Arctic Package and Arctic Package with SkyPower **(SN 0300104165 through 0300123999)**	
134	1321694	1	With Arctic Package and Arctic Package with SkyPower **(SN 0300104165 through 0300123999)**	
135	3311405	1	Locknut 1/4in-20NC	
		Ref	**LIMIT SWITCHES INSTALLATION OPTIONS:**	
	0271199	Ref	**450A/AJ Series II without Arctic Package (SN 0300065080 through 0300077284)**	E
202	1670998	2	Cover, Switch	
203	3311005	4	Locknut #10-24NC	
204	3931024	2	Capscrew, Socket Head #10-24NC x 1-1/2in	
205	3931030	2	Capscrew, Socket Head #10-24NC x 1-7/8in	
206		Ref	Switch, Limit Options:	
206	4360321	1	Switch, Limit **(SN 0300065080 through 0300074318)**	
206	4360548	1	Switch, Limit - Plunger **(SN 0300074319 through 0300077284)**	
207		Ref	Connector, Strain Relief Options:	
207	4460428	1	Connector, Strain Relief **(SN 0300065080 through 0300074318)**	
207	4460968	1	Connector, Strain Relief **(SN 0300074319 through 0300077284)**	
208	4922714	1	Cable/Limit Switch Harness Assembly	B
208	1060902	8.5 ft /2.6m	Cable, Electrical 18/2 (Not Shown - See ELECTRICAL SECTION)	
208	4460226	2	Socket, Contact (Not Shown)	
208A		Ref	Switch, Limit Options:	
208A	4360321	1	Switch, Limit **(SN 0300065080 through 0300074318)**	
208A	4360548	1	Switch, Limit - Plunger **(SN 0300074319 through 0300077284)**	
208B		Ref	Connector, Strain Relief	
208B	4460428	1	Connector, Strain Relief **(SN 0300065080 through 0300074318)**	
208B	4460968	1	Connector, Strain Relief **(SN 0300074319 through 0300077284)**	
209	4922770	37 ft /11.3m	Cable, Electrical 18/2 (Not Shown - See ELECTRICAL SECTION)	
	0272497	Ref	**450A/AJ Series II without Arctic Package (SN 0300077285 through 0300123999)**	E
	0275126	Ref	**450A/AJ Series II with Arctic Package (Arctic Package)**	C
301	0100011	AR	Compound, Locking	
302	0641406	2	Capscrew, 1/4in-20NC x 3/4in	
303		Ref	Cover, Switch Options:	
303	1670998	1	Cover, Limit Switch **(SN 0300077285 through 0300116244)**	
303	1001096617	1	Shield, Limit Switch **(SN 0300116245 through 0300123999)**	
304	1671086	1	Cover, Switch	
305	3311005	4	Locknut #10-24NC	

ITEM	PART NUMBER	QTY	DESCRIPTION	REV
306	3931024	2	Capscrew, Socket Head #10-24NC x 1-1/2in	
307	3931030	2	Capscrew, Socket Head #10-24NC x 1-7/8in	
308	4360548	1	Switch, Limit	
309	4751400	2	Flatwasher, 1/4in Regular	
310		Ref	Cable/Limit Switch Harness Assembly Options (See ELECTRICAL SECTION for Breakdown):	
310	4922714	1	Without Arctic Package	B
310	4923467	1	With Arctic Package	A
310A	4360548	1	Switch, Limit	
310B	4460968	1	Connector, Strain Relief	
311	4060803	8.5 in /217mm	Shield, Flex Trim (Not Shown)	
312	4460968	1	Connector, Strain Relief	

FIGURE 3-2. TOWER/MID BOOMS AND CYLINDERS INSTALLATION (BELGIUM BUILT MACHINES) - 450AJ SERIES II

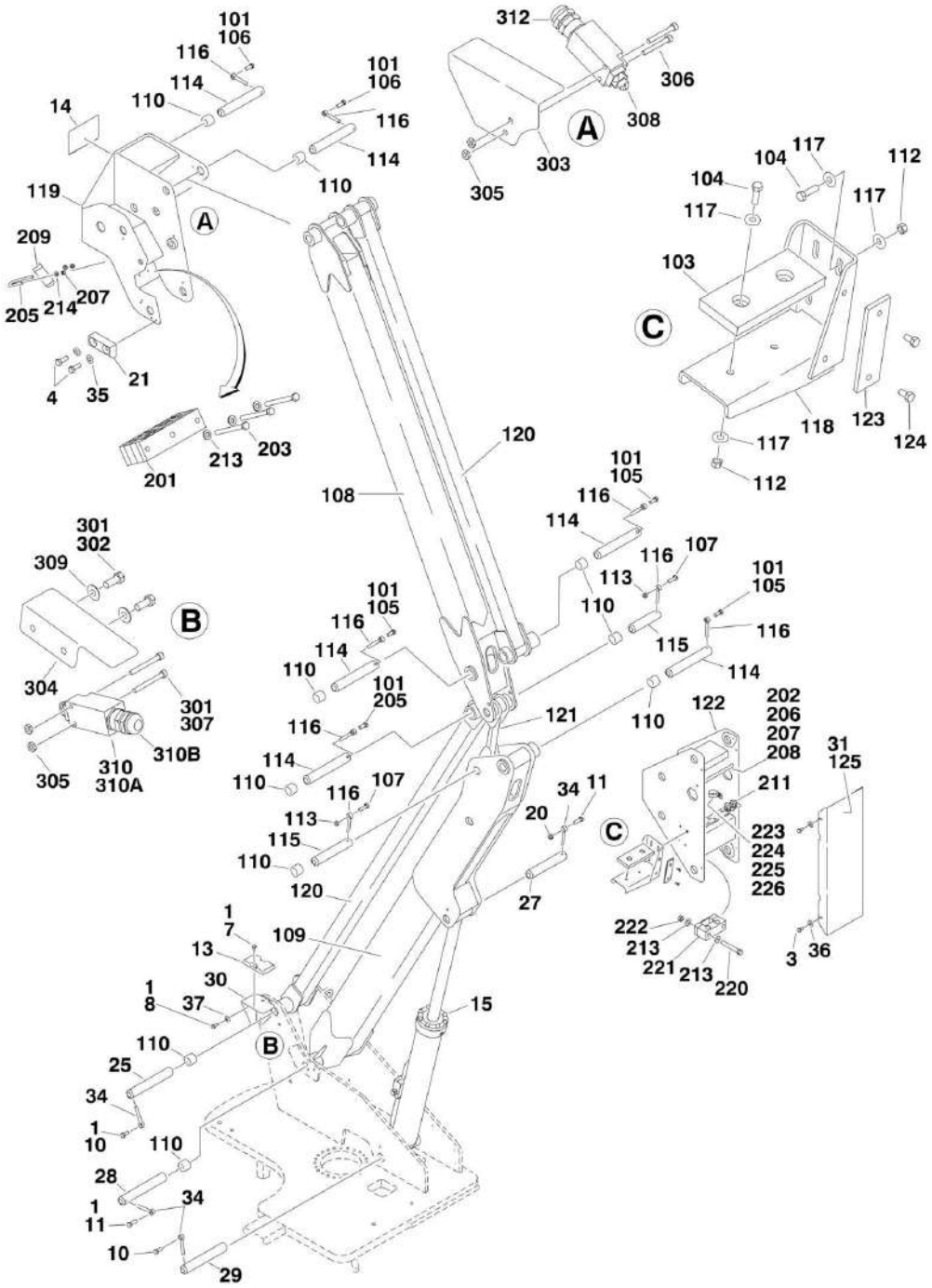

FIGURE 3-2. TOWER/MID BOOMS AND CYLINDERS INSTALLATION (BELGIUM BUILT MACHINES) - 450AJ SERIES II

ITEM	PART NUMBER	QTY	DESCRIPTION	REV
		Ref	**USA Built Machines use SNs 03xxxxxxxx.**	
		Ref	**Belgium Built Machines use SNs 13xxxxxxxx.**	
		Ref	**TOWER BOOMS AND CYLINDERS INSTALLATION**	
	0272664	Ref	**450AJ Series II Booms and Cylinders Installation**	F
	1001098640	Ref	**450AJ Series II Boom Assemblies**	A
	0275438	Ref	**450AJ Series II with SkyPower**	A
1	0100011	AR	Compound, Locking	
3	0641505	4	Bolt 5/16in-18NC x 5/8in	
4	0641507	2	Bolt 5/16in-18NC x 7/8in	
7	0641806	2	Bolt 1/2in-13NC x 3/4in	
8	0641810	3	Bolt 1/2in-13NC x 1-1/4in	
10	0642012	2	Bolt 5/8in-11NC x 1-1/2in	
11	0642016	2	Bolt 5/8in-11NC x 2in	
13	0940048	1	Bumper	
14	1671013	1	Cover **(Prior to SN 1300000407)**	
15	1684239	1	Lower Lift Cylinder Assembly (See CYLINDER SECTION for Breakdown)	
20	3312005	1	Locknut 5/8in-11NC	
21	3340914	1	Pad	
25	3422664	1	Pin	
27	3422912	1	Pin	
28	3422913	1	Pin	
29		Ref	Pin Options:	
29	3423015	1	Pin **(Prior to SN 1300000097)**	
29	3422664	1	Pin **(SN 1300000097 through 1300006000)**	
30	3572691	1	Bracket, Boom Rest	
31	3574066	1	Cover (Prior to 1300001679)	
34	3841258	4	Keeper, Pin	
35	4711500	2	Flatwasher 5/16in Thin	
36	4751500	4	Flatwasher 5/16in Regular	
37	4751800	3	Flatwasher 1/2in Regular	
		Ref	**TOWER BOOM ASSEMBLY**	
	0272340	Ref	**450AJ Series II**	G
	0801592	Ref	**450AJ Series II with SkyPower**	E
101	0100011	AR	Compound, Locking	
103	0561076	1	Block, Boom Rest	
104	0641610	6	Bolt 3/8in-16NC x 1-1/4in	
105	0642012	4	Bolt 5/8in-11NC x 1-1/2in	
106	0642014	2	Bolt 5/8in-11NC x 1- 3/4in	
107	0642016	2	Bolt 5/8in-11NC x 2in	
108	0801356	1	Boom, Mid	
109	0801357	1	Boom, Tower	
110	0961950	20	Bearing, Garmax	
112	3311605	6	Locknut 3/8in-16NC	
113	3312005	2	Locknut 5/8in-11NC	
114	3422568	6	Pin	
115	3422912	2	Pin	
116	3841258	8	Keeper, Pin	
117	4751600	14	Flatwasher 3/8in Regular	

ITEM	PART NUMBER	QTY	DESCRIPTION	REV
118		Ref	Rest, Boom Options:	
118	4846428	NLA	Rest, Boom (Use p/n 4846905) **(Prior to SN 1300000414)**	
118	4846905	1	Weldment, Boom Rest **(SN 1300000414 through 1300006000)**	
119	4846697	1	Upright (Upper)	
120		Ref	Link Options:	
120	4846700	NLA	Link (Use p/n 3010140) **(Prior to SN 1300000905)**	
120	3010140	2	Weldment, Tower Link **(SN 1300000905 through 1300006000)**	
121	4846701	1	Link, Timing	
122	4846703	1	Upright (Lower)	
123	3340608	1	Pad, Wear	
124	0641605	2	Bolt, 3/8in-16NC x 3/8in	
125	3574066	1	Cover **(SN 1300001679 through 1300006000)**	
		Ref	**BOOM CABLES AND CLAMPS INSTALLATIONS**	
	0272594	Ref	**450AJ Series II**	D
	0275436	Ref	**450AJ Series II with SkyPower**	D
		Ref	**Note: For Additional Components See ELECTRICAL SECTION**	
201	0561460	1	Block, Clamp	
202	0630498	1	Bolt	
203	0641528	3	Bolt 5/16in-18NC x 3-1/2in	
204		Ref	Cable, Electrical Options (Not Shown - See ELECTRICAL SECTION):	
204	1060991	1	Without SkyPower (12/3 AC Power Cable)	
204	4922929	NLA	With SkyPower (Use p/n 4922857) **(Prior to SN 1300002739)**	
204	4922857	1	With SkyPower **(SN 1300002739 through 1300006000)**	
205	1320300	1	Clamp, Hose	
206	3300420	1	Nut, Acorn 1/4in-20NC	
207	3311605	3	Locknut 3/8in-16NC	
208	3860096	1	Roller	
209	4061032	2	Shield, Cable	
210	4240018	7	Tie-Strap (Not Shown)	
211		Ref	Connector, Strain Relief	
211	4460425	1	Without SkyPower	
211	4460425	2	With SkyPower **(Prior to SN 1300002739)**	
211	1321692	1	With SkyPower **(SN 1300002739 through 1300006000)**	
213	4711500	AR	Flatwasher 5/16in Thin	
214	4711600	2	Flatwasher 3/8in Thin	
215	4922530	1	Harness, Tower Boom (Not Shown - See ELECTRICAL SECTION)	
216	4922770	1	Cable, Electrical (18/2 Limit Switch) (Not Shown - See ELECTRICAL SECTION)	
220	0641524	AR	Bolt 5/16in-18NC x 3in	
221	1321738	1	Clamp, Block (Machines with SkyPower Only) **(SN 1300002739 through 1300006000)**	
222	3311505	AR	Nut 5/16in-18NC	
223	0641408	1	Bolt 1/4in-20NC x 1in	
224	1320061	1	Clamp, Hose (Machines with SkyPower Only) **(SN 1300002739 through 1300006000)**	
225	3311405	1	Locknut 1/4in-20NC	
226	4751400	2	Flatwasher 1/4in Regular	
227	1320177	1	Clamp, Hose (Not Shown - Used on Airline) (Machines with SkyPower Only) **(SN 1300002739 through 1300006000)**	
228	2220829	1	Fitting, Plug (Not Shown - Used on Airline) (Machines with	

ITEM	PART NUMBER	QTY	DESCRIPTION	REV
			SkyPower Only) **(SN 1300002739 through 1300006000)**	
229	2221037	1	Fitting, Barbed (Not Shown - Used on Airline) (Machines with SkyPower Only) **(SN 1300002739 through 1300006000)**	
230	2720646	1	Hose, Airline (Not Shown) (Machines with SkyPower Only) **(SN 1300002739 through 1300006000)**	
	0272497	Ref	**LIMIT SWITCHES INSTALLATION**	D
301	0100011	AR	Compound, Locking	
302	0641406	2	Capscrew, 1/4in-20NC x 3/4in	
303		Ref	Cover, Switch Options:	
303	1670998	1	Cover, Limit Switch **(Prior to SN 1300004416)**	
303	1001096617	1	Shield, Limit Switch **(SN 1300004416 through 1300006000)**	
304	1671086	1	Cover, Switch	
305	3311005	4	Locknut #10-24NC	
306	3931024	2	Capscrew, Socket Head #10-24NC x 1-1/2in	
307	3931030	2	Capscrew, Socket Head #10-24NC x 1-7/8in	
308		Ref	Switch, Limit Options:	
308	4360321	1	Switch, Limit **(Prior to SN 1300000175)**	
308	4360548	1	Switch, Limit - Plunger **(SN 1300000175 through 1300006000)**	
309	4751400	2	Flatwasher, 1/4in Regular	
310	4922714	1	Cable/Limit Switch Harness Assembly	
310	1060902	8.5 ft /2.6m	Cable, Electrical 18/2 (Not Shown - See ELECTRICAL SECTION)	
310	4460226	2	Socket, Contact (Not Shown)	
310A		Ref	Switch, Limit Options:	
310A	4360321	1	Switch, Limit **(Prior to SN 1300000133)**	
310A	4360548	1	Switch, Limit - Plunger **(SN 1300000133 through 1300006000)**	
310B		Ref	Connector, Strain Relief	
310B	4460428	1	Connector, Strain Relief **(Prior to SN 1300000133)**	
310B	4460968	1	Connector, Strain Relief **(SN 1300000133 through 1300006000)**	
311	4060803	8.5 in /217mm	Shield, Flex Trim (Not Shown)	
312		Ref	Connector, Strain Relief Options:	
312	4460428	1	Connector, Strain Relief **(Prior to SN 1300000175)**	
312	4460968	1	Connector, Strain Relief **(SN 1300000175 through 1300006000)**	

FIGURE 3-3. MAIN BOOM INSTALLATION - 450A SERIES II

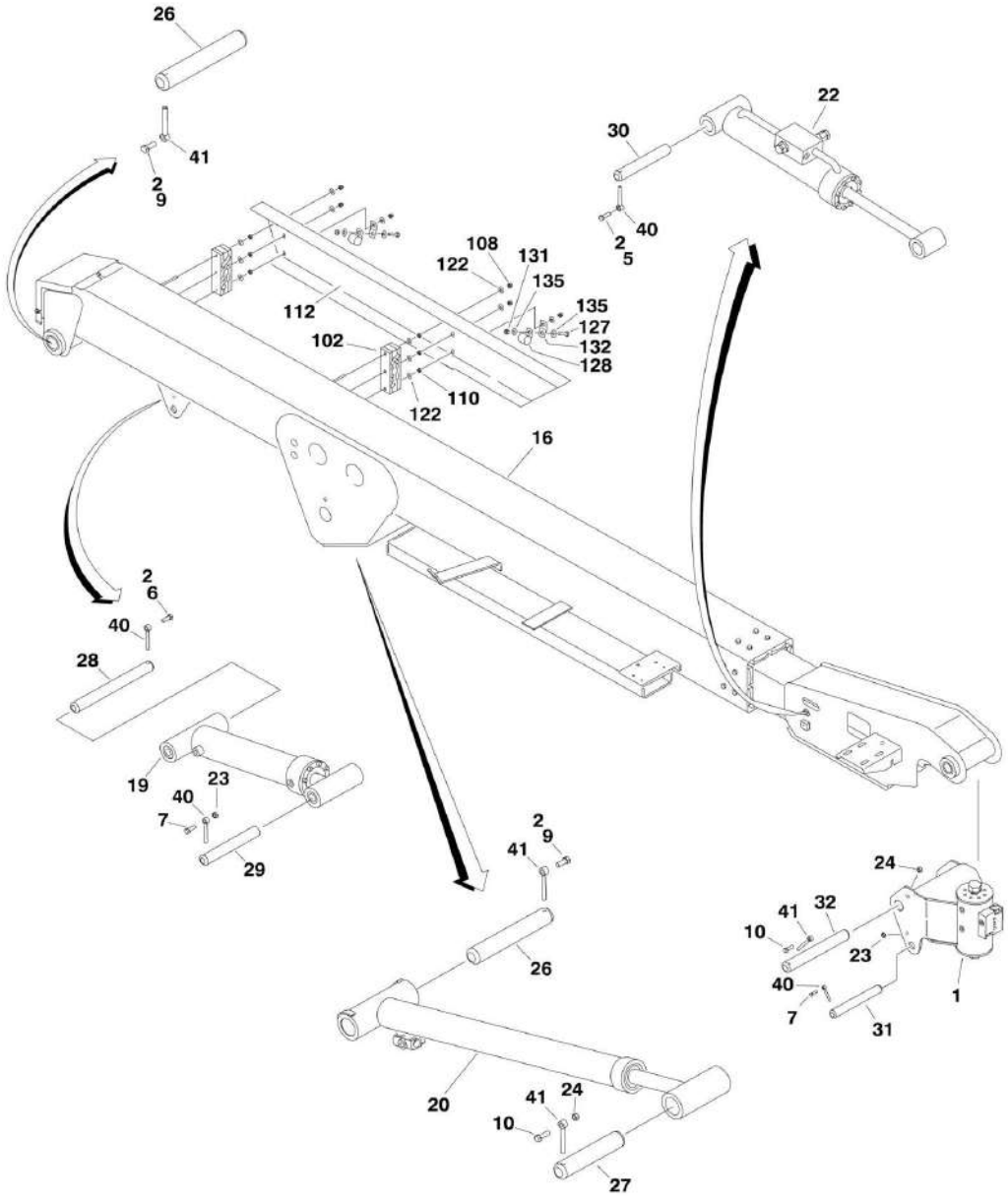

FIGURE 3-3. MAIN BOOM INSTALLATION - 450A SERIES II

ITEM	PART NUMBER	QTY	DESCRIPTION	REV
		Ref	**BOOM AND CYLINDERS INSTALLATION**	
	0271216	Ref	**Without Arctic Package**	I
	1001097501	Ref	**With Arctic Package**	A
1	0060062	1	Rotator Assembly (See ROTATOR ASSEMBLIES for Breakdown)	
2	0100011	AR	Compound, Locking	
5	0641607	1	Bolt 3/8in-16NC x 7/8in	
6	0641608	1	Bolt 3/8in-16NC x 1in	
7	0641610	2	Bolt 3/8in-16NC x 1-1/4in	
9	0641810	1	Bolt 1/2in-13NC x 1-1/4in	
10	0641812	2	Bolt 1/2in-13NC x 1-1/2in	
16	0801288	1	Main Boom Assembly (See MAIN BOOM ASSEMBLY for Breakdown)	
19	1684170	NLA	Master Cylinder Assembly (Use p/n 1001140276) (See CYLINDER SECTION for Breakdown)	
20	1684155	1	Main Lift Cylinder Assembly (See CYLINDER SECTION for Breakdown)	
22	1684165	NLA	Level (Platform Slave) Cylinder Assembly (Use p/n 1001140274) (See CYLINDER SECTION for Breakdown)	
23	3311605	2	Locknut 3/8in-16NC	
24	3311805	2	Locknut 1/2in-13NC	
26	3422177	2	Pin	
27	3422178	1	Pin	
28	3422179	1	Pin	
29	3422180	1	Pin	
30	3422454	NLA	Pin (Use p/n 3422578)	
31	3422558	1	Pin	
32	3422793	1	Pin	
40	3841143	4	Keeper, Pin	
41	3841203	4	Keeper, Pin	
		Ref	**BOOM CABLES AND CLAMPS INSTALLATIONS**	
	0271311	Ref	**450A Series II (ANSI/ANSI Export/CSA Specs)**	J
	0271310	Ref	**450A Series II (Australian/CE Specs)**	J
	0273279	Ref	**450A Series II (All Specs with SkyPower)**	C
	1001097502	Ref	**450A Series II (All Specs with Arctic Package)**	A
	1001097503	Ref	**450A Series II (All Specs with Arctic Package and SkyPower)**	B
		Ref	**Note: For Additional Components See ELECTRICAL SECTION**	
102		Ref	Block, Clamp Options:	
102	0561459	2	Without Arctic Package	
102	0561696	2	With Arctic Package	
108	3300151	6	Nut, Acorn 1/4in-20NC	
110	3311401	6	Nut 1/4in-20NC	
112	3570535	1	Shield	
122	4751400	12	Flatwasher 1/4in Regular	
124		Ref	Harness, Main Boom Options (Not Shown - See ELECTRICAL SECTION):	
124	4922531	1	Without Arctic Package	
124	1001097504	1	With Arctic Package	
125		Ref	Cable, Electrical (Not Shown - See ELECTRICAL SECTION)	
125		Ref	Machines without Arctic Package or SkyPower (12/3 AC Power Cable):	

ITEM	PART NUMBER	QTY	DESCRIPTION	REV
125	1060988	1	ANSI/ANSI Export/CSA Specs	
125	1060990	1	Australian/CE Specs	
125		Ref	Machines with Arctic Package or SkyPower:	
125	4922857	1	With SkyPower Only (8/5 AC Power Cable)	
125	4923461	1	With Arctic Package Only (12/3 AC Power Cable)	
125	4923615	NLA	With Both Arctic Package and Sky Power (8/5 AC Power Cable) (USA Built Machines) (Use p/n 4922857) **(SN 0300065080 through 0300121048)**	
125	4923615	NLA	With Both Arctic Package and Sky Power (8/5 AC Power Cable) (Belgium Built Machines) (Use p/n 4922857) **(Prior to SN 1300005225)**	
125	4922857	1	With Both Arctic Package and Sky Power (8/5 AC Power Cable) (USA Built Machines) **(SN 0300121049 through 0300123999)**	
125	4922857	1	With Both Arctic Package and Sky Power (8/5 AC Power Cable) (Belgium Built Machines) **(SN 1300005225 through 1300006000)**	
127	0641506	2	Bolt 5/16in-18NC x 3/4in (With SkyPower Only)	
128	1320202	2	Clamp (With SkyPower Only)	
131	3311505	2	Locknut 5/16in-18NC (With SkyPower Only)	
132	3574532	2	Plate, Clamp Mounting (With SkyPower Only)	
135	4751500	4	Flatwasher 5/16in Regular (With SkyPower Only)	

FIGURE 3-4. MAIN BOOM INSTALLATION - 450AJ SERIES II (USA BUILT MACHINES)

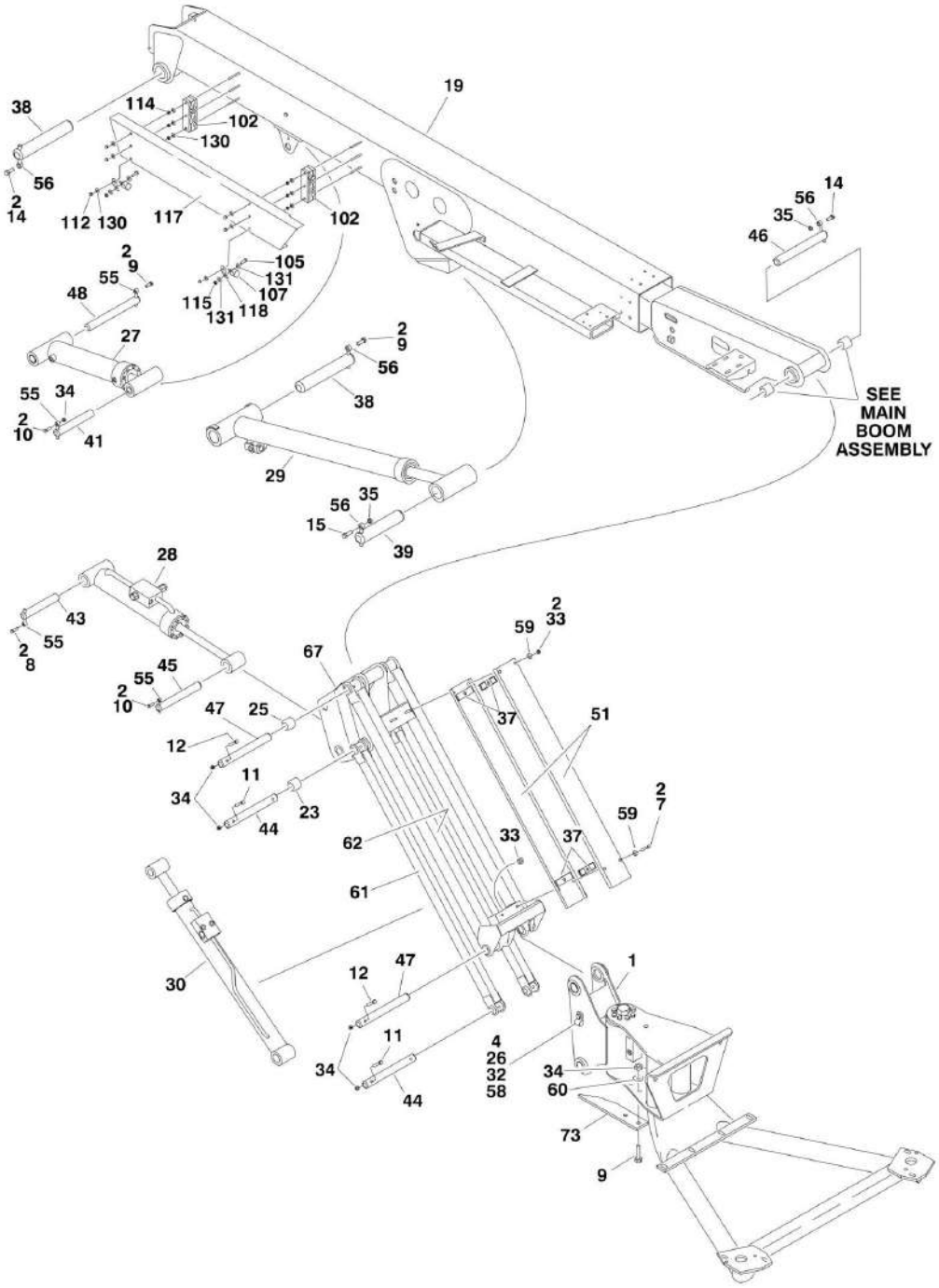

FIGURE 3-4. MAIN BOOM INSTALLATION - 450AJ SERIES II (USA BUILT MACHINES)

ITEM	PART NUMBER	QTY	DESCRIPTION	REV
		Ref	**USA Built Machines use SNs 03xxxxxxxx.**	
		Ref	**Belgium Built Machines use SNs 13xxxxxxxx.**	
		Ref	**BOOM AND CYLINDERS INSTALLATION**	
	0270839	Ref	**450AJ Series II**	K
	0275125	Ref	**450AJ Series II (Arctic Package)**	B
1		Ref	Rotator Assembly Options (See ROTATOR ASSEMBLIES for Breakdown):	
1	0060050	1	Without Arctic Package	
1	0060050	1	With Arctic Package **(SN 0300065080 through 0300100070)**	
1	0060096	1	With Arctic Package **(SN 0300100071 through 0300123999)**	
2	0100011	AR	Compound, Locking	
4	0641406	2	Bolt 1/4in-20NC x 3/4in Only **(SN 0300065080 through 0300075079)**	
7	0641518	2	Bolt 516in-18NC x 2-1/4in	
8	0641607	1	Bolt 3/8in-16NC x 7/8in	
9	0641608	3	Bolt 3/8in-16NC x 1in	
10	0641610	2	Bolt 3/8in-16NC x 1-1/4inin	
11	0641616	4	Bolt 3/8in-16NC x 2in	
12	0641618	2	Bolt 3/8in-16NC x 2-1/4in	
14	0641810	AR	Bolt 1/2in-13NC x 1-1/4in	
15	0641812	1	Bolt 1/2in-13NC x 1-1/2in	
19	0801312	1	Main Boom Assembly (See MAIN BOOM ASSEMBLY for Breakdown)	
23	0961947	2	Bushing	
25	0961951	2	Bushing	
26	1320070	2	Clamp Only **(SN 0300065080 through 0300075079)**	
27	1683773	1	Master Cylinder Assembly (See CYLINDER SECTION for Breakdown)	
28	1683760	1	Level (Platform Slave) Cylinder Assembly (See CYLINDER SECTION for Breakdown)	
29	1684154	1	Main Lift Cylinder Assembly (See CYLINDER SECTION for Breakdown)	
30	1683959	NLA	Jib Lift Cylinder Assembly (Use p/n 1001140282) (See CYLINDER SECTION for Breakdown)	
32	3311405	2	Locknut 1/4in-20NC Only **(SN 0300065080 through 0300075079)**	
33	3311501	4	Locknut 5/16in-18NC	
34	3311605	9	Locknut 3/8in-16NC	
35	3311805	2	Locknut 1/2in-13NC	
37	3340860	4	Pad, Rubber	
38	3422177	2	Pin	
39	3422178	1	Pin	
41	3422582	1	Pin	
43	3422669	1	Pin	
44	3422791	2	Pin	
45	3422792	1	Pin	
46	3422793	1	Pin	
47	3422794	2	Pin	
48	3422806	1	Pin	
51	3572551	2	Channel, Hose Carrier	
55	3841143	4	Keeper, Pin	

ITEM	PART NUMBER	QTY	DESCRIPTION	REV
56	3841203	4	Keeper, Pin	
58	4711400	2	Flatwasher 1/4in Thin Only **(SN 0300065080 through 0300075079)**	
59	4751500	6	Flatwasher 5/16in Regular	
60	4751600	2	Flatwasher 3/8in Regular	
61	4845927	2	Link, Jib (Lower)	
62	4846278	1	Link, Jib (Upper)	
67	4846356	1	Pivot, Jib	
73	4220244	1	Stop	
74		Ref	Cable, Electrical 18/2 Options (Not Shown):	
74	4922770	1	Without Arctic Package	
74	4923469	1	With Arctic Package	
		Ref	**BOOM CABLES AND CLAMPS INSTALLATIONS**	
	0271122	Ref	**ANSI/ANSI Export/CSA Specs**	J
	0271206	Ref	**Australian/CE Specs**	J
	0273280	Ref	**All Specs with SkyPower**	C
	0275116	Ref	**All Specs with Arctic Package**	C
	0275786	Ref	**All Specs with Arctic Package and SkyPower**	C
		Ref	**Note: For Additional Components See ELECTRICAL SECTION**	
102		Ref	Block, Clamp Options:	
102	0561459	2	Without Arctic Package	
102	1321696	2	With Arctic Package	
105	0641506	2	Bolt 5/16in-18NC x 3/4in (With SkyPower Only)	
107	1320202	2	Clamp (With SkyPower Only)	
112	3300151	6	Nut, Acorn 1/4in-20NC	
114	3311401	6	Nut 1/4in-20NC	
115	3311505	2	Locknut 5/16in-18NC (With SkyPower Only)	
117	3571462	1	Shield	
118	3574532	2	Plate, Clamp Mounting (With SkyPower Only)	
130	4751400	12	Flatwasher 1/4in Regular	
131	4751500	4	Flatwasher 5/16in Regular (With SkyPower Only)	
134		Ref	Harness, Main Boom Options (Not Shown - See ELECTRICAL SECTION):	
134	4922532	1	Without Arctic Package	
134	4923459	1	With Arctic Package	
135		Ref	Cable, Electrical (Not Shown - See ELECTRICAL SECTION)	
135	1060988	1	Without SkyPower (12/3 AC Power Cable)	
135	4923481	1	With Arctic Package (12/3 AC Power Cable)	
135	4922857	1	With SkyPower (8/5 AC Power Cable)	
135	4923616	NLA	With Arctic Package with SkyPower (8/5 AC Power Cable) (Use p/n 4922929) **(SN 0300065080 through 0300121048)**	
135	4922929	1	With Arctic Package with SkyPower (8/5 AC Power Cable) **(SN 0300121049 through 0300123999)**	

FIGURE 3-5. MAIN BOOM INSTALLATION - 450AJ SERIES II (BELGIUM BUILT MACHINES)

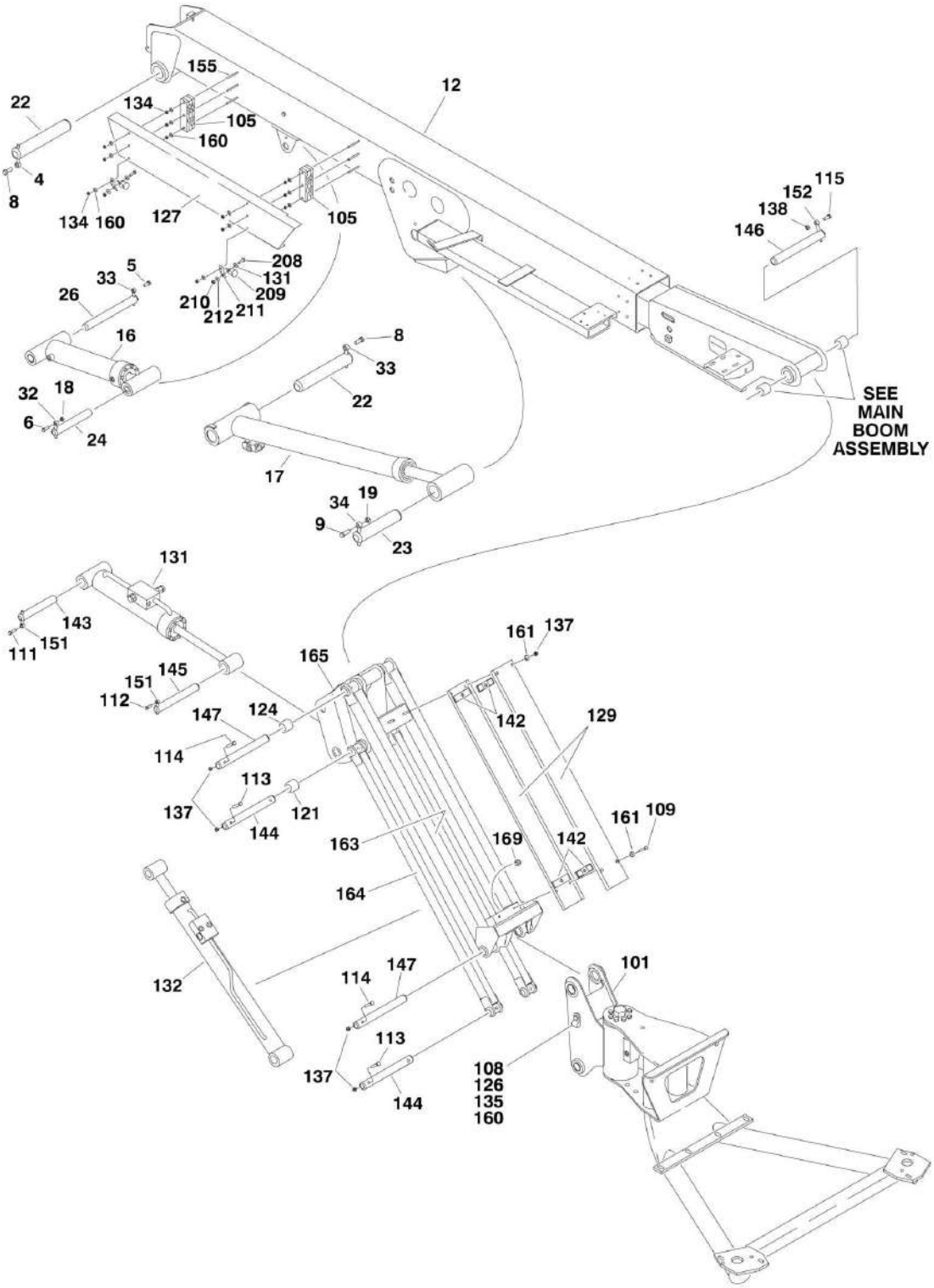

FIGURE 3-5. MAIN BOOM INSTALLATION - 450AJ SERIES II (BELGIUM BUILT MACHINES)

ITEM	PART NUMBER	QTY	DESCRIPTION	REV
		Ref	**USA Built Machines use SNs 03xxxxxxxx.**	
		Ref	**Belgium Built Machines use SNs 13xxxxxxxx.**	
		Ref	**MAIN BOOM AND CYLINDERS INSTALLATION**	
	0272664	Ref	**450AJ Series II Booms and Cylinders Installation**	F
	1001098640	Ref	**450AJ Series II Boom Assemblies**	A
	0275438	Ref	**450AJ Series II with SkyPower**	A
1	0100011	AR	Compound, Locking	
5	0641608	1	Bolt 3/8in-16NC x 1in	
6	0641610	1	Bolt 3/8in-16NC x 1-1/4in	
8	0641810	2	Bolt 1/2in-13NC x 1-1/4in	
9	0641812	1	Bolt 1/2in-13NC x 1-1/2in	
12		Ref	Main Boom Assembly Options (See MAIN BOOM ASSEMBLY and Items 101-165 for Breakdown):	
12	0801361	1	Without SkyPower	
12	0801593	1	With SkyPower	
16	1684241	1	Master Cylinder Assembly (See CYLINDER SECTION for Breakdown)	
17	1684244	1	Upper Lift Cylinder Assembly (See CYLINDER SECTION for Breakdown)	
18	3311605	1	Locknut 3/8in-16NC	
19	3311805	1	Locknut 1/2in-13NC	
22	3422177	2	Pin	
23	3422178	1	Pin	
24	3422582	1	Pin	
26	3422806	1	Pin	
32	3841143	2	Keeper, Pin	
33	3841203	3	Keeper, Pin	
34	3841258	4	Keeper, Pin	
		Ref	**JIB INSTALLATION**	
	0801361	Ref	**Without SkyPower**	G
	0801593	Ref	**With SkyPower**	F
101	0060050	1	Rotator Assembly (See ROTATOR ASSEMBLIES for Breakdown)	
102	0100011	AR	Compound, Locking	
105	0561515	2	Clamp, Block	
108	0641406	2	Bolt 1/4in-20NC x 3/4in Only **(Prior to SN 1300000144)**	
109	0641518	2	Bolt 5/16in-18NC x 2-1/4in	
111	0641607	1	Bolt 3/8in-16NC x 7/8in	
112	0641610	1	Bolt 3/8in-16NC x 1-1/4in	
113	0641616	4	Bolt 3/8in-16NC x 2in	
114	0641618	2	Bolt 3/8in-16NC x 2-1/4in	
115	0641810	1	Bolt 1/2in-13NC x 1-1/4in	
121	0961947	2	Bushing	
124	0961951	2	Bushing	
126	1320070	2	Clamp **(Prior to SN 1300000144)**	
127	3571462	1	Shield	
129	1671083	2	Cover, Jib Hose	
131		Ref	Level (Platform Slave) Cylinder Assembly Options (See CYLINDER SECTION for Breakdown):	
131	1684240	NLA	Cylinder, Level (Use p/n 1001094789) **(Prior to SN 1300004150)**	
131	1001094789	1	Cylinder, Level **(SN 1300004150 through 1300006000)**	

SECTION 3 - BOOM

ITEM	PART NUMBER	QTY	DESCRIPTION	REV
132	1684242	1	Jib Lift Cylinder Assembly (See CYLINDER SECTION for Breakdown)	
134	3311402	12	Nut, Jam 1/4in-20NC	
135	3311405	2	Locknut 1/4in-20NC Only **(Prior to SN 1300000144)**	
137	3311605	12	Locknut 3/8in-16NC	
138	3311805	1	Locknut 1/2in-13NC	
142	3340943	4	Pad, Rubber	
143	3422669	1	Pin	
144	3422791	2	Pin	
145	3422792	1	Pin	
146	3422793	1	Pin	
147	3422794	2	Pin	
151	3841143	2	Keeper, Pin	
152	3841203	1	Keeper, Pin	
155	3951420	6	Setscrew 1/4in-20NC x 2-1/2in	
160	4751400	12	Flatwasher 1/4in Regular	
161	4751500	6	Flatwasher 5/16in Regular	
163	4846688	1	Link, Jib (Upper)	
164	4846689	2	Link, Jib (Lower)	
165	4846693	1	Pivot, Jib	
169	3311501	4	Nut 5/16in-18NC	
		Ref	**BOOM CABLES AND CLAMPS INSTALLATION**	
	0272665	Ref	**Without SkyPower**	C
	0275437	Ref	**With SkyPower**	B
		Ref	**Note: For Additional Components See ELECTRICAL SECTION**	
201	1060996	1	Cable, Electrical (AC Cable) (Not Shown - See ELECTRICAL SECTION)	
203	4922532	1	Harness, Main Boom (Not Shown - See ELECTRICAL SECTION)	
207		Ref	Cable, Electrical (8/5 Generator Cable) Options (With SkyPower Only) (Not Shown - See ELECTRICAL SECTION):	
207	4922857	1	Harness, 8/5 Upper **(Prior to SN 1300002739)**	
207	4922929	1	Harness, 8/5 Generator Cable **(SN 1300002739 through 1300006000)**	
208	0641506	2	Bolt 5/16in-18NC x 3/4in (With SkyPower Only)	
209	1320202	2	Clamp (With SkyPower Only)	
210	3311505	2	Locknut 5/16in-18NC (With SkyPower Only)	
211	3574532	2	Plate, Clamp Mounting (With SkyPower Only)	
212	4751500	4	Flatwasher 5/16in Regular (With SkyPower Only)	
213	2820647	1	Hose, Air Line (With SkyPower Only) (Not Shown)	

FIGURE 3-6. MAIN BOOM ASSEMBLIES

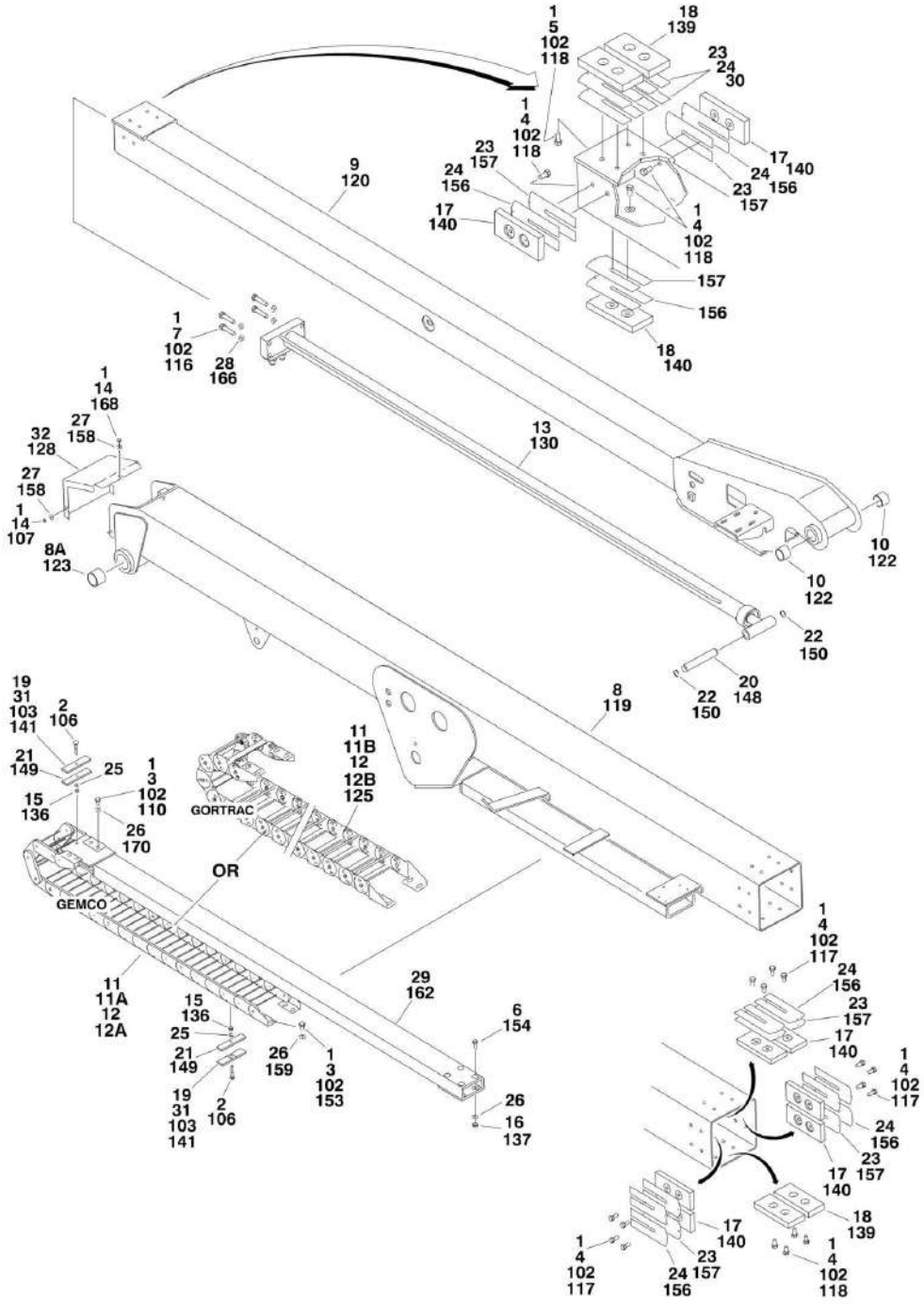

FIGURE 3-6. MAIN BOOM ASSEMBLIES

ITEM	PART NUMBER	QTY	DESCRIPTION	REV
		Ref	**USA Built Machines use SNs 03xxxxxxxx.**	
		Ref	**Belgium Built Machines use SNs 13xxxxxxxx.**	
		Ref	**MAIN BOOM ASSEMBLY OPTIONS (USA BUILT MACHINES)**	
	0801288	Ref	**450A Series II**	C
	0801312	Ref	**450AJ Series II**	4-C
1	0100011	AR	Compound, Locking	
2	0630401	2	Bolt, Carriage 5/16in-18NC x 2in	
3	0641605	8	Bolt 3/8in-16NC x 5/8in	
4	0641606	22	Bolt 3/8in-16NC x 3/4in	
5	0641607	4	Bolt 3/8in-16NC x 7/8in	
6	0641608	4	Bolt 3/8in-16NC x 1in	
7	0641818	4	Bolt 1/2in-13NC x 2-1/4in	
8		Ref	Base Weldment Options:	
8	0801289	1	Base Weldment (450A Series II)	
8	0801260	1	Base Weldment (450AJ Series II)	
8A	0961950	2	Bearing	
9		Ref	Fly Weldment Options:	
9	0801290	1	Fly Weldment (450A Series II)	
9	0801192	1	Fly Weldment (450AJ Series II)	
10	0961948	2	Bearing	
11	1180227	NLA	Power Track for 450A Series II (Original Equipment) (Use p/n 1001225902)	
11	1001099838	NLA	Power Track for 450A Series II (Service Replacement) (Use p/n 1001225902)	
11	1001225902	1	Power Track for 450A Series II (Service Replacement)	
		Ref	**Note: Original Equipment Power Track may have been replaced with a Service Replacement. Visually identify the power track before ordering parts.**	
11A		Ref	Gemco Replacement Parts:	
11A	7006139	AR	Repair Section for p/n 1180227 (was p/n 7006187)	
11A	7006156	1	Rod, Carrier for p/n 1180227	
11A	7006151	2 pr	Feet, Mounting for p/n 1180227	
11A	7006152	AR	Pin Kit for p/n 1180227 (Includes 1 Link Pin, 4 Different Size Washers and 1 Retaining Ring) (was p/n 7006177)	
11B		Ref	Gortrac Replacement Parts:	
11B	70001996	AR	Repair Section for p/n 1001099838 (Includes 1 Pin Assembly for each end)	
11B	70001998	2 pr	Mounting Foot Kit for p/n 1001099838 (Includes Both Pair of Feet)	
11B	70006269	AR	Repair Section for p/n 1001225902 (Includes 1 Pin Assembly for each end)	
11B	70006280	2 pr	Mounting Foot Kit for p/n 1001225902 (Includes Both Pair of Feet)	
12	1180352	NLA	Power Track for 450AJ Series II (Use p/n 1001099833)	
12	1001099833	1	Power Track for 450AJ Series II (Service Replacement)	
		Ref	**Note: Original Equipment Power Track may have been replaced with a Service Replacement. Visually identify the power track before ordering parts.**	
12A		Ref	Gemco Replacement Parts:	
12A	7006139	AR	Repair Section for p/n 1180352	
12A	7006151	2 pr	Feet, Mounting for p/n 1180352	
12A	7006152	AR	Pin Kit for p/n 1180352 (Includes 1 Link Pin, 4 Different Size	

ITEM	PART NUMBER	QTY	DESCRIPTION	REV
			Washers and 1 Retaining Ring)	
12B		Ref	Gortrac Replacement Parts:	
12B	70001996	AR	Repair Section for p/n 1001099833 (Includes 1 Pin Assembly for each end)	
12B	70001998	2 pr	Mounting Foot Kit for p/n 1001099833 (Includes Both Pair of Feet)	
13		Ref	Telescope Cylinder Assembly Options (See CYLINDER SECTION for Breakdown):	
13	1684095	1	Telescope Cylinder Assembly (450A Series II)	
13	1684140	1	Telescope Cylinder Assembly (450AJ Series II)	
14	3311401	2	Nut 1/4in-20NC	
15	3311505	4	Locknut 5/16in-18NC	
16	3311605	4	Locknut 3/8in-16NC	
17	3340881	8	Pad, Wear	
18	3340837	5	Pad, Wear	
19	3340940	2	Pad, Rubber	
20	3422804	1	Pin	
21	3570958	3	Plate, Clamp	
22	3760115	2	Ring, Retaining	
23	4070897	AR	Shim (#18)	
24	4070898	AR	Shim (#11)	
25	4711500	2	Flatwasher 5/16in Thin	
26	4711600	12	Flatwasher 3/8in Thin	
27	4751400	10	Flatwasher 1/4in Regular	
28	4761800	4	Lockwasher 1/2in	
29		Ref	Tube, Carrier	
29	4845767	1	Tube, Carrier (450A Series II)	
29	4846033	1	Tube, Carrier (450AJ Series II)	
30	4070982	AR	Shim (#16)	
31	0100081	AR	Adhesive #454	
32	1670678	NLA	Cover, Boom End (Use p/n 1670679)	
		Ref	**MAIN BOOM ASSEMBLY OPTIONS (BELGIUM BUILT MACHINES)**	
	0801361	Ref	**Main Boom Assembly (450AJ Series II without SkyPower)**	G
	0801593	Ref	**Main Boom Assembly (450AJ Series II with SkyPower)**	F
102	0100011	AR	Compound, Locking	
103	0100081	AR	Adhesive #454	
106	0630401	2	Bolt, Carriage 5/16in-18NC x 2in	
107	0641404	4	Bolt 1/4in-20NC x 1/2in	
110	0641604	4	Bolt 3/8in-16NC x 1/2in	
110	0641605	4	Bolt 3/8in-16NC x 5/8in	
116	0641818	4	Bolt 1/2in-13NC x 2-1/4in	
117	0791606	12	Screw 3/8in-16NC x 3/4in	
118	0791607	16	Screw 3/8in-16NC x 7/8in	
119		Ref	Base Weldment Options:	
119	0801362	1	Boom, Base Weldment **(Prior to SN 1300000012)**	
119	0801379	1	Boom, Base Weldment **(SN 1300000012 through 1300006000)**	
120		Ref	Fly Weldment Options:	
120	0801363	1	Boom, Fly Weldment **(Prior to SN 1300000012)**	
120	0801380	1	Boom, Fly Weldment **(SN 1300000012 through 1300006000)**	
122	0961948	2	Bearing	
123	0961950	2	Bearing	

ITEM	PART NUMBER	QTY	DESCRIPTION	REV
125		Ref	Power Track Options:	
125	1180378	NLA	Power Track (Original Equipment) (Use p/n 1001225900)	
125	1001225900	1	Power Track (Service Replacement)	
125	7026120	AR	Repair Section (Used with 1180378)	
125	7026119	1	Feet, Mounting (Includes 4 Feet and Mounting Hardware) (Used with 1180378)	
125	70006267	AR	Repair Section (Used with 1001225900)	
125	70006275	1	Feet, Mounting (Includes 4 Feet and Mounting Hardware) (Used with 1001225900)	
128		Ref	Cover, Boom End Options:	
128	1671079	1	Cover, Boom End **(Prior to SN 1300000012)**	
128	1671111	1	Cover, Boom End **(SN 1300000012 through 1300006000)**	
130	1684262	1	Telescope Cylinder Assembly (See CYLINDER SECTION for Breakdown)	
136	3311505	2	Locknut 5/16in-18NC	
137	3311605	10	Locknut 3/8in-16NC	
139	3340837	4	Pad, Wear	
140	3340881	10	Pad, Wear	
141	3340940	2	Pad, Rubber	
148	3422996	1	Pin	
149	3572448	2	Plate, Clamp	
150	3760115	2	Ring, Retaining	
153	3900283	4	Screw, Button Head 3/8in-16NC x 3/4in	
154	3900316	4	Screw, Button Head 3/8in-16NC x 1in	
156	4071056	10	Shim (1mm)	
157	4071057	10	Shim (3mm)	
158	4711400	4	Flatwasher 1/4in Thin	
159	4711600	4	Flatwasher 3/8in Thin	
162	4846734	1	Tube, Carrier	
166	4891800	4	Flatwasher 1/2in Hardened	
167	0962257	1	Bushing, Composite (Not Shown)	
168	3941406	1	Screw, Self-Tapping	
170	4891600	4	Flatwasher 3/8in Hardened	

FIGURE 3-7. ROTATOR ASSEMBLIES

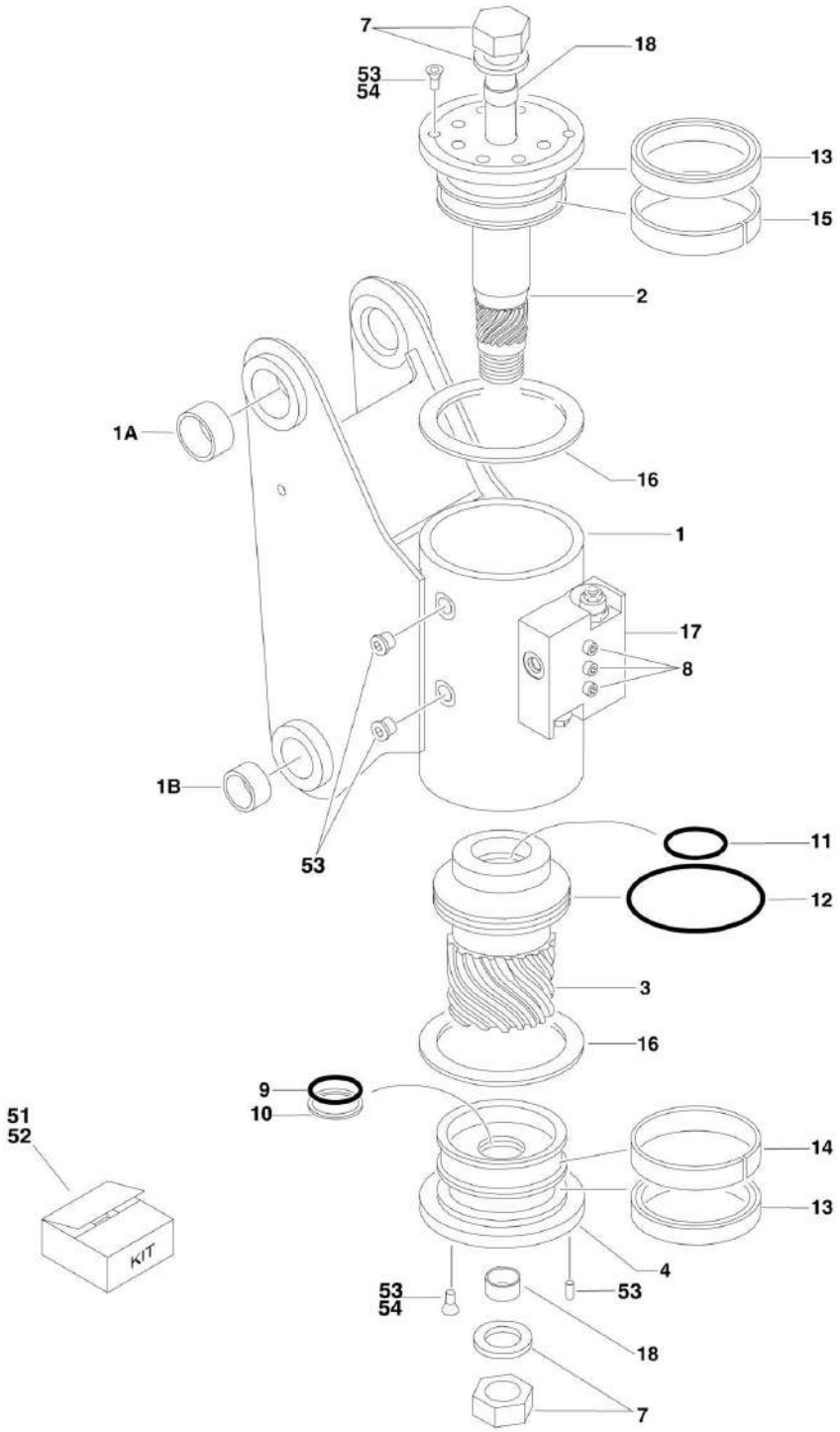

FIGURE 3-7. ROTATOR ASSEMBLIES

ITEM	PART NUMBER	QTY	DESCRIPTION	REV
		Ref	**ROTATOR ASSEMBLIES**	
	0060062	Ref	**Rotator Assembly (450A Series II)**	C
	0060050	Ref	**Rotator Assembly (450AJ Series II without Arctic Package)**	G
	0060050	Ref	**Rotator Assembly (450AJ Series II With Arctic Package) (SN 0300065080 through 0300100070)**	G
	0060096	Ref	**Rotator Assembly (450AJ Series II With Arctic Package) (SN 0300100071 through 0300123999)**	A
1	See Note	1	Case/Bracket Weldment (Note: Not Available - Purchase Complete Assembly)	
1A		Ref	Bushing Options: (Top)	
1A	Not Required	0	Bushing (Top) (0060062 Rotator)	
1A	0962257	2	Bushing (Top) (0060050 & 0060096 Rotators)	
1B		Ref	Bushing Options: (Bottom)	
1B	Not Required	0	Bushing (Bottom) (0060062 Rotator)	
1B	0961947	2	Bushing (Bottom) (0060050 & 0060096 Rotators)	
2		Ref	Shaft Options:	
2	7017162	1	Shaft (0060062 Rotator)	
2	7017140	1	Shaft (0060050 Rotator)	
2	7017162	1	Shaft (0060096 Rotator)	
3		Ref	Sleeve, Piston Options:	
3	7017163	1	Sleeve, Piston (0060062 Rotator)	
3	7017139	1	Sleeve, Piston (0060050 Rotator)	
3	7017163	1	Sleeve, Piston (0060096 Rotator)	
4		Ref	Cap, End Options:	
4	7017164	1	Cap, End (0060062 Rotator)	
4	7017148	1	Cap, End (0060050 Rotator)	
4	7017164	1	Cap, End (0060096 Rotator)	
7		Ref	Tie Rod Assembly Options:	
7	See Note	1	Tie Rod Assembly (0060062 & 0060096 Rotators)	
		Ref	**0060050 Rotator Options:**	
7	7017143	1	USA Built Machines **(SN 0300065080 through 0300068926)**	
7	See Note	1	USA Built Machines **(SN 0300068927 through 0300123999)**	
7	See Note	1	Belgium Built Machines **(SN 1300000001 through 1300006000)**	
		Ref	**Note: See Platform Support Installation for Components.**	
8	See Note	3	Bolt 1/4in-20NC x 1-1/2 (Grade 8) (Note: Not available for purchase)	
9	See Note	1	Seal, Cap (Note: Use Item 51)	
10	See Note	1	Ring, Back-Up Cap (Note: Use Item 51)	
11	See Note	1	Seal, Rod (Note: Use Item 51)	
12	See Note	1	Seal, Piston (Note: Use Item 51)	
13	See Note	2	Packing, Bearing (Note: Use Item 51)	
14	See Note	1	Bearing, Cap (Note: Use Item 52)	
15	See Note	1	Bearing, Shaft (Note: Use Item 52)	
16	See Note	2	Thrustwasher (Note: Use Item 52)	
17	7017172	1	Counterbalance Valve Assembly	
17	7017192	2	Cartridge (No Seal Kit Available)	
18		Ref	Bushing Options:	
18	7017195	2	Bushing (0060062 Rotator)	
18	7017136	2	Bushing (0060050 Rotator)	
18	See Note	2	Bushing (0060096 Rotator) (Note: Not available for purchase)	

ITEM	PART NUMBER	QTY	DESCRIPTION	REV
51		Ref	Seal Kit Options: (Includes Items 9-13)	
51	7017158	1	Seal Kit (0060062 Rotator)	
51	7017137	1	Seal Kit (0060050 Rotator)	
51	70000342	1	Seal Kit (0060096 Rotator)	
52		Ref	Bearing Kit Options: (Includes Items 14-16)	
52	7017159	1	Bearing Kit (0060062 Rotator)	
52	7017138	1	Bearing Kit (0060050 Rotator)	
	7017159	1	Bearing Kit (0060096 Rotator)	
53		Ref	Hardware Kit Options:	
53	See Note	1	Hardware Kit (0060050 Rotator) (Note: Not available for purchase)	
53	7017142	1	Hardware Kit (0060062 & 0060096 Rotator)	
54	70001697	4	Screw, Countersunk 1/4in-20NC x 3/8in (Grade 8)	

FIGURE 3-8. PLATFORM SUPPORT AND CONTROL VALVES INSTALLATIONS (FRONT ENTRY PLATFORM)

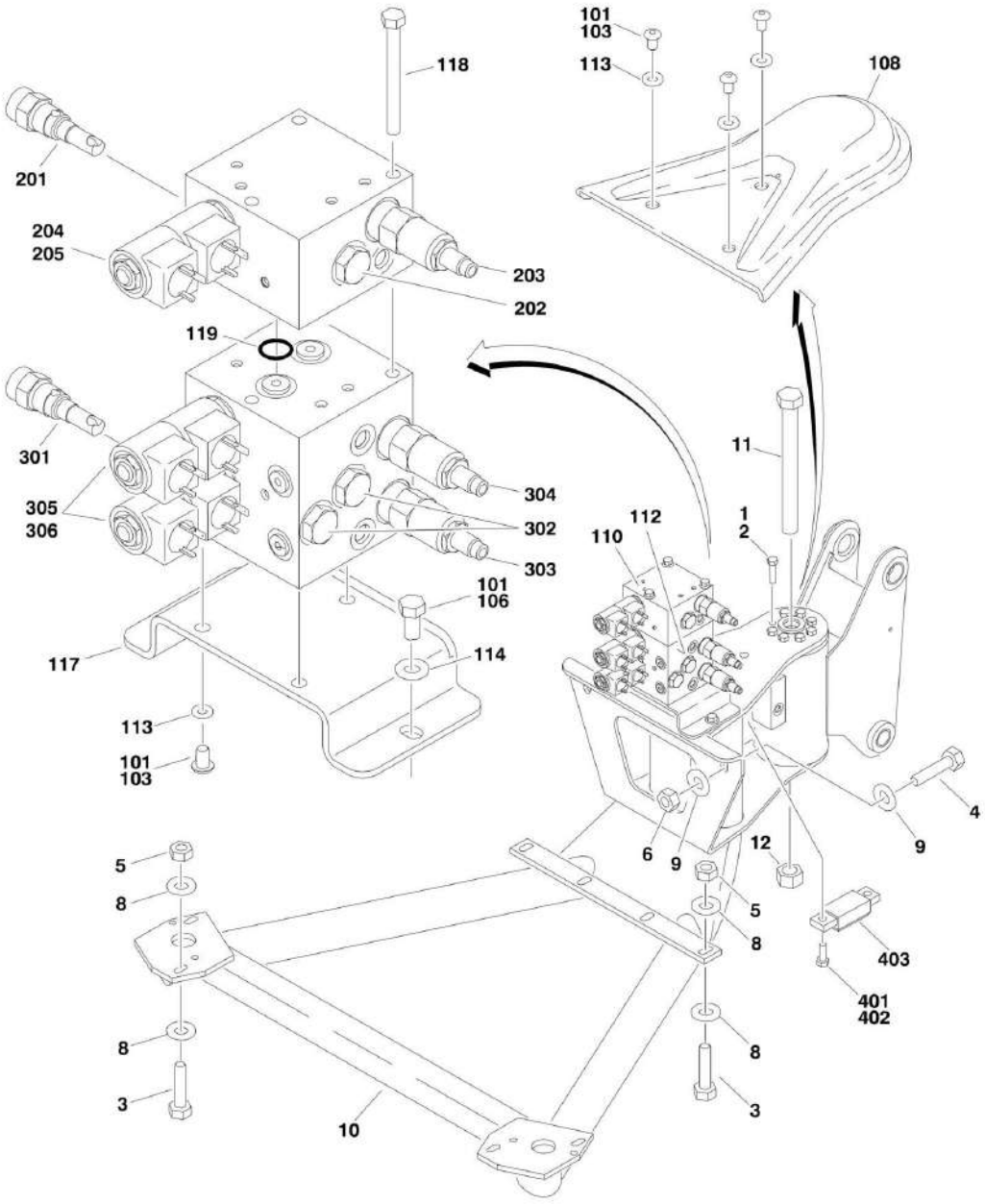

FIGURE 3-8. PLATFORM SUPPORT AND CONTROL VALVES INSTALLATIONS (FRONT ENTRY PLATFORM)

ITEM	PART NUMBER	QTY	DESCRIPTION	REV
		Ref	**PLATFORM SUPPORT INSTALLATION**	
	0270015	Ref	**All Specs Except CE Spec**	C
	0270532	Ref	**CE Spec**	B
1	0100011	AR	Compound, Locking	
2	0641606	8	Bolt 3/8in-16NC x 3/4in	
3	0681610	6	Bolt 3/8in-16NC x 1-1/4in (Grade 8)	
4	0641820	2	Bolt 1/2in-13NC x 2-1/2in	
5	3311605	6	Locknut 3/8in-16NC	
6	3311805	2	Locknut 1/2in-13NC	
8	4751600	12	Flatwasher 3/8in Regular	
9	4751800	4	Flatwasher 1/2in Regular	
10		Ref	Support Weldment Options:	
10	4846158	1	All Specs Except CE Spec	
10	4846298	1	CE Spec	
11	0642684	1	Bolt 1in-8NC x 10-1/2in	
12	3272605	1	Locknut 1in-8NC	
		Ref	**CONTROL VALVE INSTALLATIONS**	
	0271124	Ref	**Control Valve (450A Series II)**	E
	0271197	Ref	**Control Valve (450AJ Series II)**	E
101	0100011	AR	Compound, Locking	
103	0630467	6	Screw, Button Head	
106	0641606	2	Bolt 3/8in-16NC x 3/4in	
108	1670964	1	Cover	
110		Ref	Valve, Jib (See Items 201-205 for Breakdown)	
110	Not Required	0	Valve, Jib (450A Series II)	
110	4641175	1	Valve, Jib (450AJ Series II)	
112	4641177	1	Valve, Level/Rotate (See Items 301-306 for Breakdown)	
113	4711500	9	Flatwasher 5/16in Thin	
114	4711600	2	Flatwasher 3/8in Thin	
117	4846218	1	Plate, Valve Mounting	
118	0641526	3	Bolt 5/16in-18NC x 3-1/4in (450AJ Series II Only)	
119	3780117	2	O-Ring (450AJ Series II Only)	
	4641175	Ref	**JIB Valve Assembly (450AJ Series II Only)**	D
201	7023984	1	Valve, Cartridge	
201	7012953	1	Seal Kit - 7023984 Valve	
202	7010542	1	Valve, Load Shuttle	
202	7010543	1	Seal Kit - 7010542 Valve	
203	7023915	1	Valve, Relief	
203	7012967	1	Seal Kit - 7023915 Valve	
204	7017452	1	Valve, Solenoid	
204	7017402	1	Seal Kit - 7017452 Valve	
205	7012944	2	Coil	
	4641177	Ref	**LEVEL/ROTATE VALVE ASSEMBLY**	C
301	7012989	1	Valve, Cartridge	
301	7012953	1	Seal Kit - 7012965 Valve	
302	7012914	2	Valve, Pressure Control	
302	7012918	2	Seal Kit - 7012914 Valve	
303	7023911	1	Valve, Relief	
303	7012967	1	Seal Kit - 7023911 Valve	

ITEM	PART NUMBER	QTY	DESCRIPTION	REV
304	7023912	1	Valve, Relief	
304	7012967	1	Seal Kit - 7023912 Valve	
305	7017452	2	Valve, Solenoid	
305	7017402	2	Seal Kit - 7017452 Valve	
306	7012944	4	Coil	
	0271313	Ref	**PLATFORM OVERLOAD INSTALLATION**	B
401	0100011	AR	Compound, Locking	
402	0701010	2	Bolt M10 x 20mm	
403	3990108	1	Cell, Load	
404	4240033	4	Tie-Strap (Not Shown)	

FIGURE 3-9. PLATFORM SUPPORT AND CONTROL VALVES INSTALLATIONS (SIDE ENTRY PLATFORM)

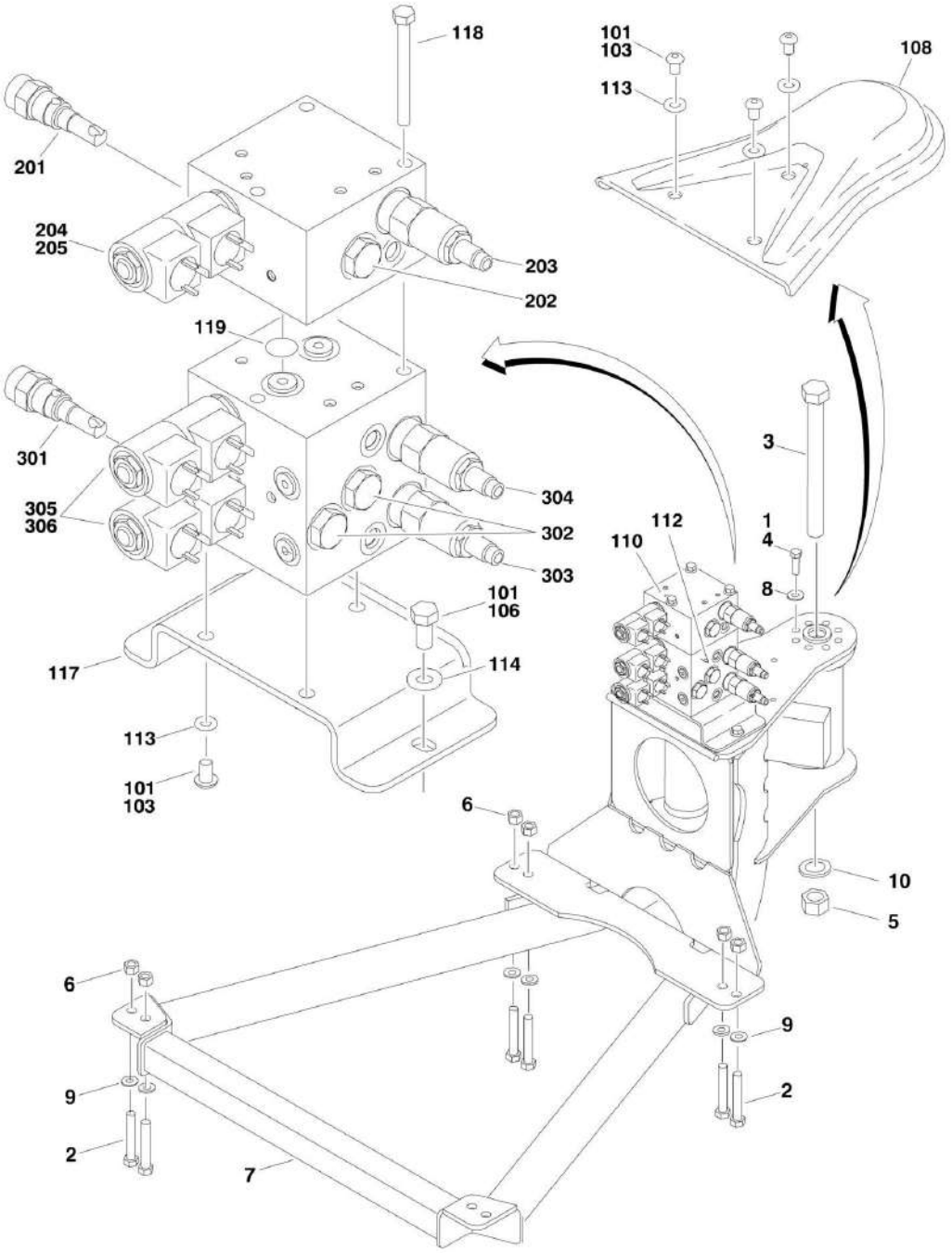

FIGURE 3-9. PLATFORM SUPPORT AND CONTROL VALVES INSTALLATIONS (SIDE ENTRY PLATFORM)

ITEM	PART NUMBER	QTY	DESCRIPTION	REV
	0272070	Ref	**PLATFORM SUPPORT INSTALLATION (ALL SPECS EXCEPT CE SPEC)**	E
		Ref	**Note: For CE Spec Machines Refer to JLG Supplement p/n 3124287 for Components.**	
1	0100011	AR	Compound, Locking	
2	0641812	8	Bolt 1/2in-13NC x 1-1/2in	
3	0642684	1	Bolt 1in-8NC x 10-1/2	
4	0681608	8	Bolt 3/8in-16NC x 1in	
5	3272605	NLA	Locknut 1in-8NC (Use p/n 3300243)	
6	3311805	8	Locknut 1/2in-13NC	
7	4846573	1	Support Weldment	
8	4891600	8	Flatwasher 3/8in Hardened	
9	4891800	8	Flatwasher 1/2in Hardened	
10	4892600	1	Flatwasher 1in Hardened	
		Ref	**CONTROL VALVE INSTALLATIONS**	
	0271124	Ref	**Control Valve (450A Series II)**	E
	0271197	Ref	**Control Valve (450AJ Series II)**	E
101	0100011	AR	Compound, Locking	
103	0630467	6	Screw, Button Head	
106	0641606	2	Bolt 3/8in-16NC x 3/4in	
108	1670964	1	Cover	
110		Ref	Valve, Jib Options (See Items 201-205 for Breakdown):	
110	Not Required	0	Valve, Jib (450A Series II)	
110	4641175	1	Valve, Jib (450AJ Series II)	
112	4641177	1	Valve, Level/Rotate (See Items 301-306 for Breakdown)	
113	4711500	9	Flatwasher 5/16in Thin	
114	4711600	2	Flatwasher 3/8in Thin	
117	4846218	1	Plate, Valve Mounting	
118	0641526	3	Bolt 5/16in-18NC x 3-1/4in	
119	3780117	2	O-Ring	
	4641175	Ref	**JIB VALVE ASSEMBLY**	D
201	7023984	1	Valve, Cartridge	
201	7012953	1	Seal Kit - 7023984 Valve	
202	7010542	1	Valve, Load Shuttle	
202	7010543	1	Seal Kit - 7010542 Valve	
203	7023915	1	Valve, Relief	
203	7012967	1	Seal Kit - 7023915 Valve	
204	7017452	1	Valve, Solenoid	
204	7017402	1	Seal Kit - 7017452 Valve	
205	7012944	2	Coil	
	4641177	Ref	**LEVEL/ROTATE VALVE Assembly**	C
301	7012989	1	Valve, Cartridge	
301	7012953	1	Seal Kit - 7012965 Valve	
302	7012914	2	Valve, Pressure Control	
302	7012918	2	Seal Kit - 7012914 Valve	
303	7023911	1	Valve, Relief	
303	7012967	1	Seal Kit - 7023911 Valve	
304	7023912	1	Valve, Relief	
304	7012967	1	Seal Kit - 7023912 Valve	

ITEM	PART NUMBER	QTY	DESCRIPTION	REV
305	7017452	2	Valve, Solenoid	
305	7017402	2	Seal Kit - 7017452 Valve	
306	7012944	4	Coil	

FIGURE 3-10. PLATFORM SUPPORT INSTALLATION - WITH LSS

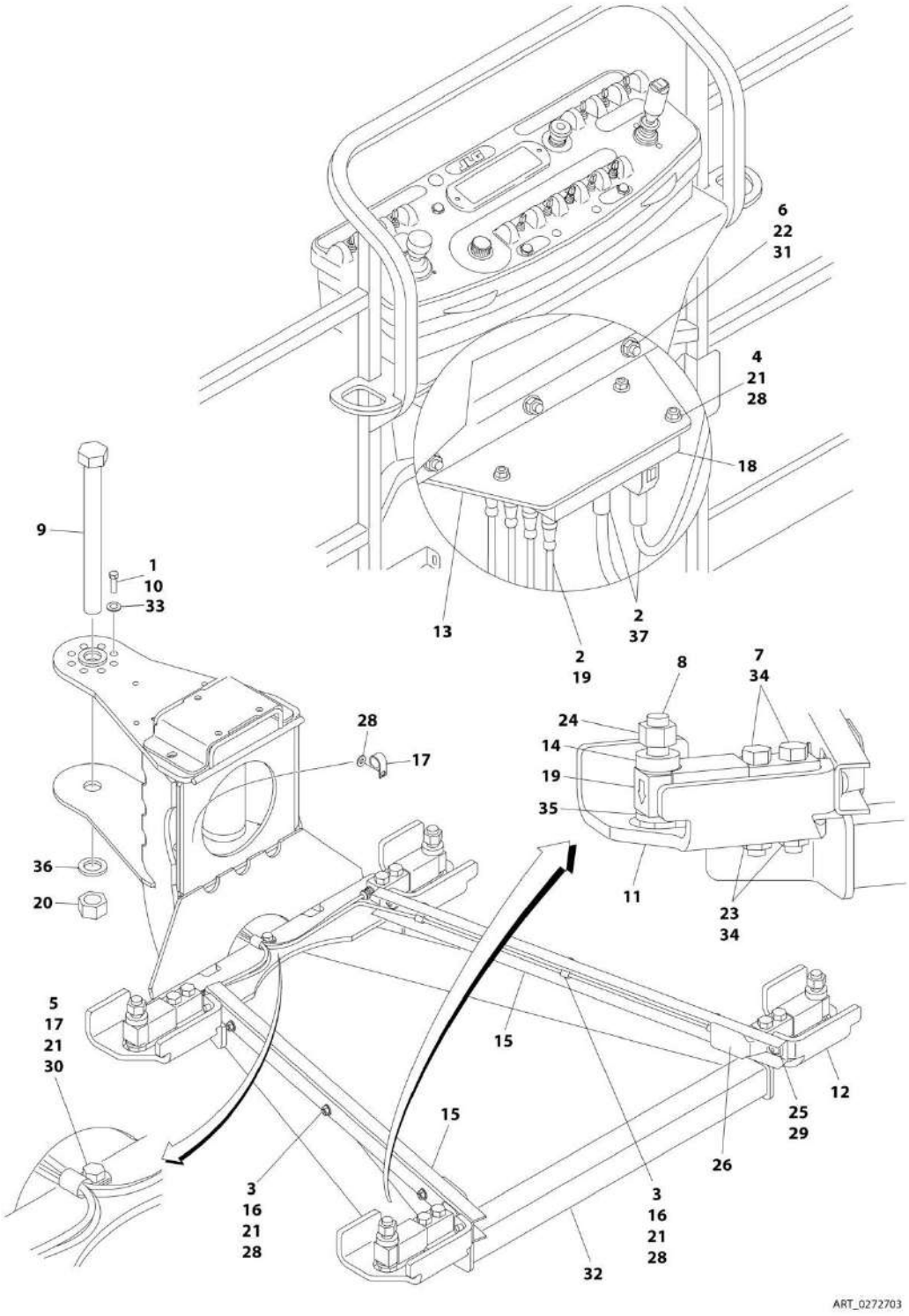

FIGURE 3-10. PLATFORM SUPPORT INSTALLATION - WITH LSS

ITEM	PART NUMBER	QTY	DESCRIPTION	REV
	0272703	Ref	**PLATFORM SUPPORT INSTALLATION - WITH LSS**	K
1	0100011	AR	Compound, Locking	
2	0100048	AR	Grease, Dielectric	
3	0641405	6	Bolt 1/4 x 5/8	
4	0641416	3	Bolt 1/4 x 2	
5	0641407	1	Bolt 1/4 x 7/8	
6	0641516	3	Bolt 5/16 x 2	
7	0641822	8	Bolt 1/2 x 2-3/4	
8	0642024	8	Bolt 5/8 x 3	
9	0642684	1	Bolt 1 x 10-1/2	
10	0681608	8	Bolt 3/8 x 1 Grade 8	
11	0902919	2	Bracket, Cell Guard	
12	0902920	2	Bracket, Cell Guard	
13	0902894	1	Bracket, Module Mount	
14	0962450	4	Bushing, Spacer	
15	1271538	2	Channel	
16	1320136	6	Clamp	
17	1320224	2	Clamp	
18	1600387	1	Module, Control - LSS (Note: Re-calibration Required when Replaced)	
19	2420202	4	Cell, Load (Includes Cable)	
20	3272605	1	Nut 1 Grade 8	
21	3311405	10	Nut 1/4	
22	3311508	3	Nut 5/16	
23	3311805	8	Nut 1/2	
24	3312005	4	Nut 5/8	
25	3900283	4	Screw 3/8 x 3/4	
26	4061054	2	Shield	
27	4240033	AR	Tie-Strap (Not Shown)	
28	4711400	10	Washer 1/4	
27	4711600	4	Washer 3/8	
30	4751400	1	Washer 1/4	
31	4751500	3	Washer 5/16	
32	4846573	1	Support, Platform	
33	4891600	8	Washer 3/8	
34	4891800	8	Washer 1/2	
35	4892000	4	Washer 5/8	
36	4892600	1	Washer 1	
37	4922869	1	LSS Harness	
37	4922705	1	Analyzer Harness (Not Shown)	
37	4460761	1	Receptacle, Female - 4 Position (Not Shown)	
37	4460226	2	Socket, Female	
37	4460836	1	Connector - 12 Position (Black) (J2)	
37	4460465	2	Socket, Female	
37	4460466	10	Plug, Terminal	
37	0840055	1	Boot	
37	4460933	1	Connector - 12 Position (Grey) (J1)	
37	4460465	3	Socket, Female	
37	4460466	9	Plug, Terminal	
37	0840055	1	Boot	

SECTION 4 - PLATFORM

FIGURE 4-1. PLATFORM INSTALLATION (USA BUILT MACHINES) (SN 0300065080 through 0300069154)

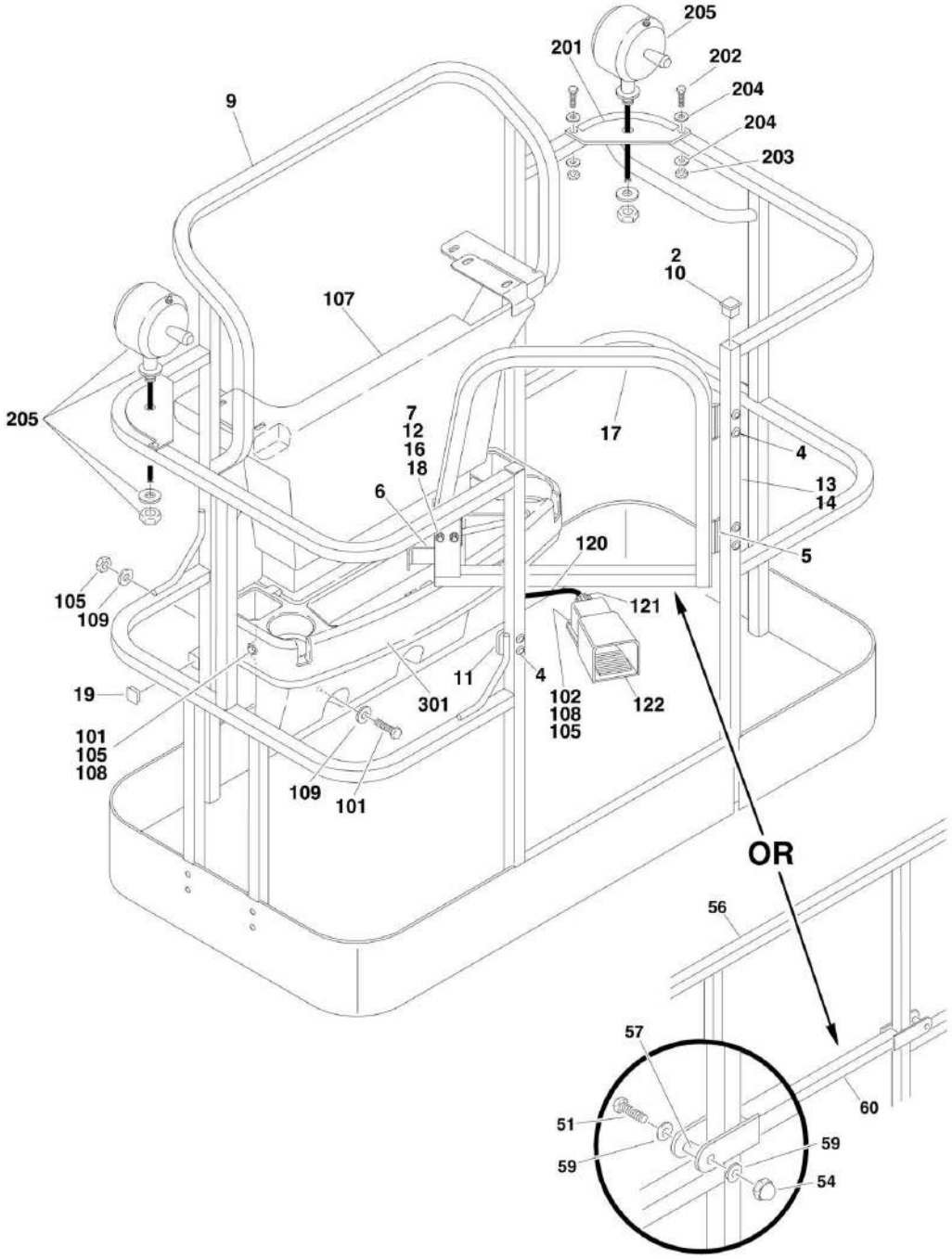

FIGURE 4-1. PLATFORM INSTALLATION (USA BUILT MACHINES) (SN 0300065080 through 0300069154)

ITEM	PART NUMBER	QTY	DESCRIPTION	REV
		Ref	**PLATFORM ASSEMBLIES (WITH GATE)**	
	3510738	Ref	**6ft (1.83m) with Standard Gate/No Mesh**	C
	3510744	Ref	**6ft (1.83m) with Standard Gate/Mesh to Top Rail**	D
	3510742	Ref	**6ft (1.83m) with Self-Closing Gate/No Mesh**	D
	3510754	Ref	**6ft (1.83m) with Self-Closing Gate/Mesh to Top Rail**	E
	3510693	Ref	**5ft (1.52m) with Standard Gate/No Mesh) (SN 0300065080 through 0300065639)**	D
	3510825	Ref	**5ft (1.52m) with Standard Gate/No Mesh) (SN 0300065640 through 0300123999)**	A
	3510779	Ref	**4ft (1.22m) with Standard Gate/No Mesh**	A
	3510780	Ref	**4ft (1.22m) with Self-Closing Gate/No Mesh**	D
		Ref	**Note: Replacement Decals Must be Ordered Separately - See DECAL SECTION.**	
2	0100040	AR	Sealant, RTV Silicone	
4	2080040	13	Fastener, Huck	
5		Ref	Hinge Options:	
5	2600216	2	Standard Gate	
5	2600219	2	Self-Closing Gate	
6	2940074	1	Latch	
7	3311001	4	Nut #10-24NC	
9	See Note	1	Platform Weldment (Note: Not Available Purchase Platform Assembly.)	
10	3520072	3	Cap-Plug	
11	3539685	1	Plate, Latch	
12	3911008	4	Screw #10-24NC x 1in	
13	4060803	6 in/15cm	Trim	
14	4220165	1	Stop, Gate	
16	4751000	8	Flatwasher #10 Regular	
17		Ref	Gate Weldment Options:	
17	4845327	1	No Mesh/Standard Gate	
17	4845951	1	Mesh to Top Rail/Standard Gate	
17	4845426	1	No Mesh/Self-Closing Gate	
18	4761000	4	Lockwasher #10	
19	3520172	2	Plug	
19	0100010	AR	Adhesive	
		Ref	**Platform Assemblies (WITH LIFT BAR)**	
	3510781	Ref	**Platform Assembly - 4ft (1.22m)**	A
	3510716	Ref	**Platform Assembly - 6ft (1.83m)**	1-B
51	0641418	2	Bolt 1/4in-20NC x 2-1/4in	
53	0961845	2	Bushing	
54	3300151	2	Nut, Acorn 1/4-20NC	
56	See Note	1	**Platform Weldment (Note: Not Available Purchase Platform Assembly.)**	
57	4420055	4	Tape	
59	4740411	4	Washer, Nylon	
60	4845288	1	Weldment, Slidebar	
	0271931	Ref	**CONSOLE BOX AND FOOTSWITCH INSTALLATION**	A
101	0641406	AR	Bolt 1/4in-20NC x 3/4in	
102	0641408	3	Bolt 1/4in-20NC x 1in	
105	3311405	AR	Locknut 1/4in-20NC	

SECTION 4 - PLATFORM

ITEM	PART NUMBER	QTY	DESCRIPTION	REV
107	3380434	1	Panel, Molded	
108	4740362	7	Washer, Fender	
109	4751400	4	Flatwasher 1/4in Regular	
120	1060918	8 ft/2.4m	Cable, Electrical - 18/3	
121	4460071	1	Terminal, Strain Relief	
122	4360031	1	Footswitch	
122	7000625	2	Block, Contact	
	0270814	Ref	**WORKLIGHTS INSTALLATION (OPTIONAL)**	3-E
201	3536089	2	Plate, Mounting	
202	0641414	4	Bolt 1/4in-20NC x 1-3/4in	
203	3311405	4	Locknut 1/4in-20NC	
204	4711400	8	Flatwasher 1/4in Thin	
205	2920140	2	Worklight Assembly	
205	7016399	2	Bulb, Replacement (1 per Assembly)	
206	4240099	10	Tie-Strap (Not Shown)	
207	2820035	9 ft/2.75m	Loom, Vinyl (Not Shown)	
		Ref	**TRAY INSTALLATIONS (OPTIONAL)**	
301	1580012	1	Tray, Storage (Center)	
302	1580013	2	Tray, Storage (Rail Mounted - Not Shown)	

FIGURE 4-2. PLATFORM INSTALLATION (USA BUILT MACHINES AND BELGIUM BUILT MACHINES) (SN 0300069155 through 0300123999)

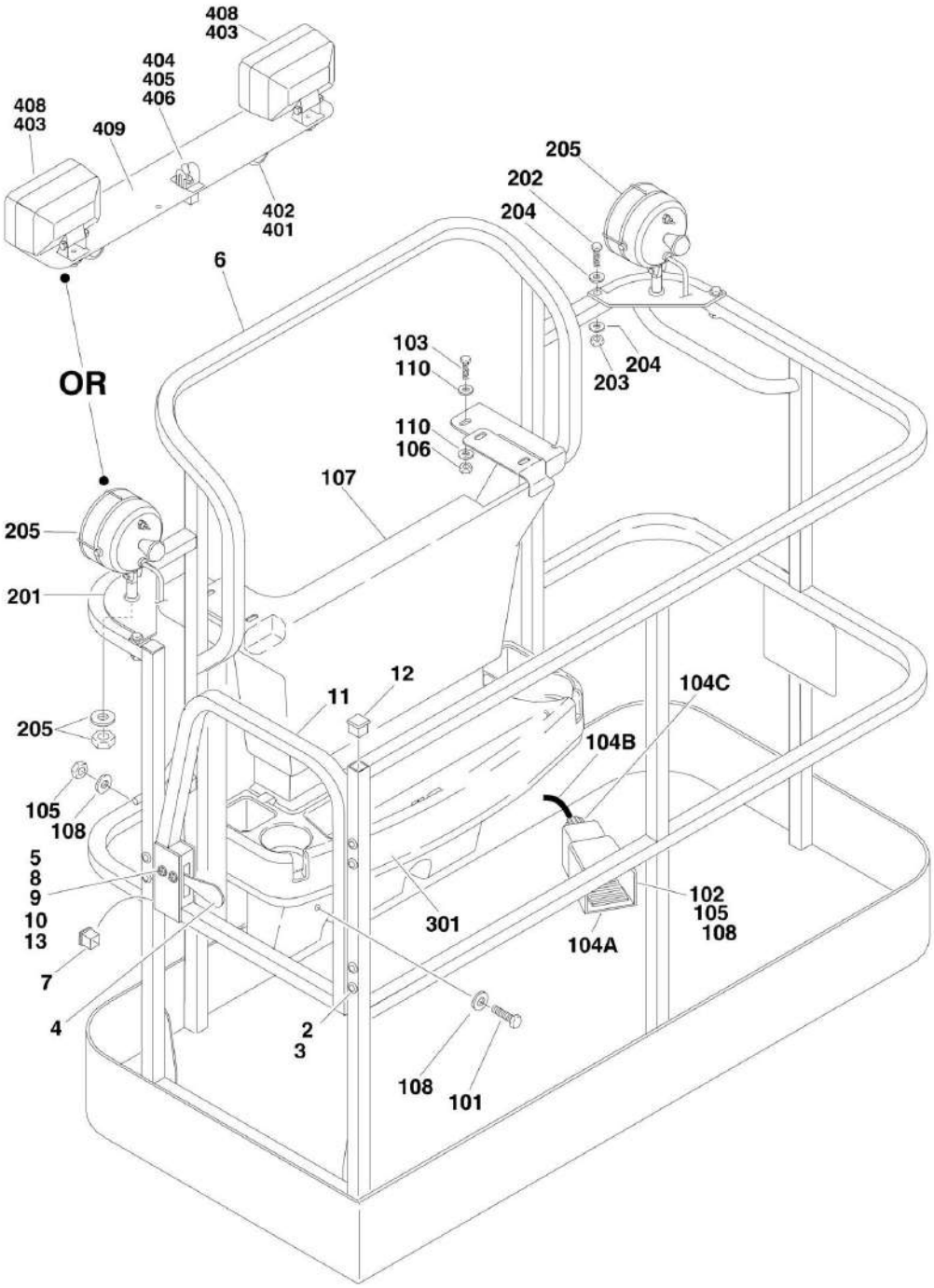

FIGURE 4-2. PLATFORM INSTALLATION (USA BUILT MACHINES AND BELGIUM BUILT MACHINES) (SN 0300069155 through 0300123999)

ITEM	PART NUMBER	QTY	DESCRIPTION	REV
		Ref	**PLATFORM ASSEMBLIES:**	
	3510832	Ref	**6ft (1.83m) with No Mesh (Use p/n 1001144025)**	B-L
	3510831	Ref	**5ft (1.52m) with No Mesh (Use p/n 1001144026)**	B-L
	3510830	Ref	**4ft (1.22m) with No Mesh (Use p/n 1001144027)**	B-M
		Ref	**Note: Original Equipment platform may have been replaced with Service Replacement platform. Identify platform before ordering parts.**	
		Ref	**Note: Platform and Mesh must be ordered separately for Platforms with Mesh. See SPECIAL OPTIONS SECTION for Mesh Installations.**	
		Ref	**Note: Replacement Decals Must be Ordered Separately - See DECAL SECTION.**	
2	2080040	16	Fastener, Huck	
3	2600281	2	Hinge, Self-Closing	
4	2940074	1	Latch	
5	3311001	2	Nut #10-24NC (USA Built Machines) **(SN 0300069155 through 0300077395)**	
5	3311001	2	Nut #10-24NC (Belgium Built Machines) **(Prior to SN 1300000309)**	
6	See Note	1	**Platform Weldment (Note: Not Available Purchase Platform Assembly.)**	
7	3520072	1	Cap-Plug	
8		Ref	Fastener Options:	
8	3900205	4	Screw #10-24NC **(SN 0300069155 through 0300077395, Prior to SN 1300000309)**	
8	3820020	4	Rivet, Pop (USA Built Machines) **(SN 0300077395 through 0300123999)**	
8	3820020	4	Rivet, Pop (Belgium Built Machines) **(SN 1300000309 through 1300006000)**	
9	4751000	2	Flatwasher #10 Regular (USA Built Machines) **(SN 0300069155 through 0300077395)**	
9	4751000	2	Flatwasher #10 Regular (Belgium Built Machines) **(Prior to SN 1300000309)**	
10	4761000	2	Lockwasher #10 (USA Built Machines) **(SN 0300069155 through 0300077395)**	
10	4761000	2	Lockwasher #10 (Belgium Built Machines) **(Prior to SN 1300000309)**	
11		Ref	Gate Weldment Options:	
11	4846452	1	Gate for Original Equipment Platform p/n 3510830, 3510831, 3510832	
11	1001144629	1	Gate for Service Replacement Platform p/ns 1001144025, 1001144026, 1001144027	
12	3520198	2	Plug, Square Tube	
13	0100011	AR	Compound, Locking (USA Built Machines) **(SN 0300069155 through 0300077395)**	
13	0100011	1	Compound, Locking (Belgium Built Machines) **(Prior to SN 1300000309)**	
	0271931	Ref	**CONSOLE BOX AND FOOTSWITCH INSTALLATION**	B
101	0641406	2	Bolt 1/4in-20NC x 3/4in	
102	0641408	2	Bolt 1/4in-20NC x 1in	
103	0641610	2	Bolt 3/8in-16NC x 1-1/4in	
104	0861512	2	Platform Console Assembly (Not Shown) (See PLATFORM CONSOLE ASSEMBLY for Breakdown)	

ITEM	PART NUMBER	QTY	DESCRIPTION	REV
104	0272970	1	Footswitch Assembly	A
		Ref	**Note: Assembly p/n 0272970 may use either p/n 4360031 or p/n 1001117320. If Original Equipment was replaced as an "assembly," p/n 1001117320 may have been used as part of the Service Replacement. Identify component before ordering parts.**	
104		Ref	Footswitch Options:	
104	4360031	1	USA Built Machines	
104	4360031	1	Belgium Built Machines	
104	7000625	2	Block, Contact for 4360031 Footswitch	
104	1001117320	1	USA Built Machines	
104	1001117320	1	Belgium Built Machines	
104	1001117320	1	Romanian Built Machines	
104	70003483	2	Block, Contact for 1001117320 Footswitch	
104B	1060918	AR	Cable, Electrical - 18/3	
104C	4460071	2	Connector, Strain Relief	
104D	4460464	1	Pin, Male (Not Shown)	
104E	4460226	2	Socket, Female (Not Shown)	
105	3311405	5	Locknut 1/4in-20NC	
106	3311605	72 ft/22m	Locknut 3/8in-16NC	
107	3380434	1	Panel, Decal Mount	
108	4740362	1	Washer, Fender 1/4in	
109	4751400	2	Flatwasher 1/4in Regular (USA Built Machines) **(SN 0300069155 through 0300087630)**	
109	4751400	2	Flatwasher 1/4in Regular (Belgium Built Machines) **(Prior to SN 1300001024)**	
110	4751600	8	Flatwasher 3/8in Regular	
		Ref	**WORKLIGHTS INSTALLATIONS (OPTIONAL)**	
	0270814	Ref	**USA Built Machines (SN 0300069155 through 0300074318)**	3-E
	0273495	Ref	**USA Built Machines (SN 0300074319 through 0300123999)**	A
110	0270814	Ref	**Belgium Built Machines (SN 0300069155 through 0300074318)**	3-E
110	0273495	Ref	**Belgium Built Machines (SN 1300000138 through 1300006000)**	B
201	3536089	2	Plate, Mounting	
202		Ref	Fastener Options:	
202	0641414	4	Bolt 1/4in-20NC x 1-3/4in (USA Built Machines) **(SN 0300069155 through 0300112387)**	
204	0641414	4	Bolt 1/4in-20NC x 1-3/4in (Belgium Built Machines) **(Prior to SN 1300004010)**	
202	2080040	4	Fastener, Huck (USA Built Machines) (Not Shown) **(SN 0300112388 through 0300123999)**	
202	2080040	4	Fastener, Huck (Belgium Built Machines) (Not Shown) **(SN 1300004010 through 1300006000)**	
203	3311405	4	Locknut 1/4in-20NC (USA Built Machines) **(SN 0300069155 through 0300112388)**	
203	3311405	4	Locknut 1/4in-20NC (Belgium Built Machines) **(Prior to SN 1300004010)**	
204	4711400	8	Flatwasher 1/4in Thin (USA Built Machines) **(SN 0300069155 through 0300112388)**	
204	4711400	8	Flatwasher 1/4in Thin (Belgium Built Machines) **(Prior to SN 1300004010)**	
205	2920140	2	Worklight	
205	7016399	2	Bulb, Replacement (1 Per Worklight)	
206	4240099	10	Tie-Strap (Not Shown)	
207	2820035	9	Loom, Vinyl (Not Shown)	

ITEM	PART NUMBER	QTY	DESCRIPTION	REV
209		Ref	Connector, Strain Relief Options (Not Shown - Located at Console Box):	
209	4460598	1	USA Built Machines **(SN 0300069155 through 0300074318)**	
209	4460426	1	USA Built Machines **(SN 0300074319 through 0300123999)**	
209	4460598	1	Belgium Built Machines **(Prior to SN 1300000138)**	
209	4460426	1	Belgium Built Machines **(SN 1300000138 through 1300006000)**	
		Ref	**TRAY INSTALLATIONS (OPTIONAL)**	
301	1580012	1	Tray, Storage (Center)	
302	1580013	1	Tray, Storage (Rail Mounted - Not Shown)	
	0272921	Ref	**FLOODLIGHTS INSTALLATION (OPTIONAL)**	A
401	0641518	2	Bolt 5/16in-18NC x 2-1/4in	
402	2560173	2	Handle, Star Knob	
403	2920157	2	Floodlight	
403	7024452	2	Bulb, Replacement (1 Per Light)	
404	3250585	1	Nameplate - Lights On	
405	4060802	1	Guard, Switch	
406	4360336	1	Switch, Toggle	
407	4420037	AR	Tape, Insulation (Not Shown)	
408	4751800	2	Flatwasher 1/2in Regular	
409	4846561	1	Mount, Light	
411	0641406		Bolt 1/4in-20NC x 3/4in (Used with #413 - Not Shown)	
412	1060663	72 ft/22m	Cable, Electrical 12/3 (Not Shown)	
413	1320222	1	J-Clip (Not Shown)	
414	3311405	1	Locknut 1/4in-20NC (Used with #413 - Not Shown)	
415	4711400	2	Flatwasher 1/4in Thin (Used with #413 - Not Shown)	

FIGURE 4-3. FALL ARREST PLATFORM COMPONENTS INSTALLATION (OPTIONAL)

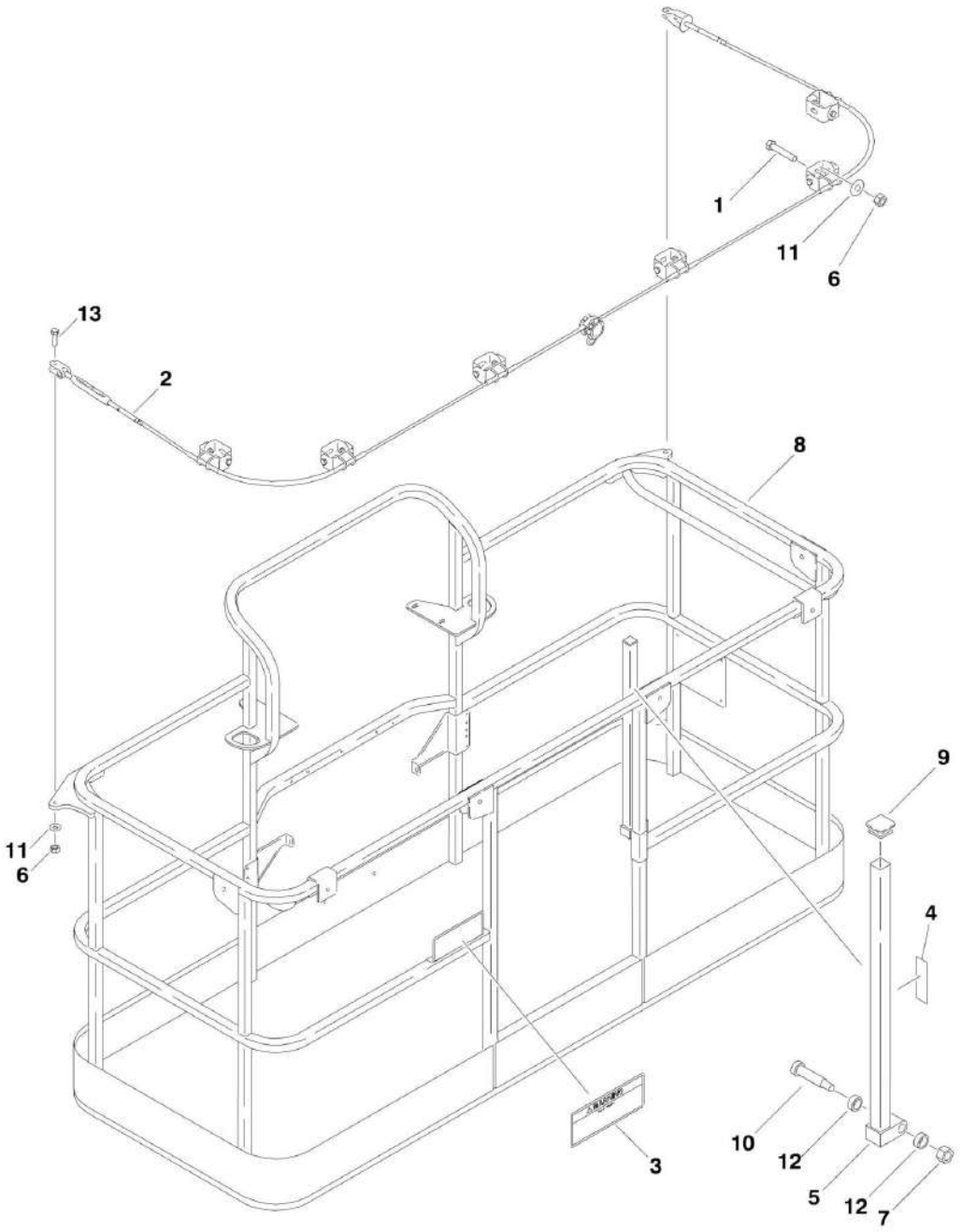

FIGURE 4-3. FALL ARREST PLATFORM COMPONENTS INSTALLATION (OPTIONAL)

ITEM	PART NUMBER	QTY	DESCRIPTION	REV
		Ref	**Note: USA Built Machines Only.**	
		Ref	**Note: Available only on 450A Series II ANSI and CSA Spec Machines.**	
	3510884	Ref	**PLATFORM ASSEMBLY (FALL ARREST)**	B
1	0681822	4	Bolt 1/2in-13NC x 2-3/4in (Grade 8)	
2	1060919	1	Cable, Fall Arrest	
3	1705014	1	Decal - Safety	
4	1706385	1	Decal - Drop Bar	
5	2410014	1	Gate Weldment	
6	3271805	6	Locknut 1/2in-13NC (Grade 8)	
7	3311605	1	Locknut 3/8in-16NC	
8	See Note	1	Platform Weldment (Note: Purchase Platform Assembly.)	
9	3520072	1	Cap-Plug	
10	3900054	1	Bolt 1/2in-13NC x 1-3/4in	
11	4751800	8	Flatwasher 1/2in Regular	
12	0962270	2	Bearing, Oilite	
13	0681814	4	Bolt 1/2in-13NC x 1-3/4in (Grade 8)	

FIGURE 4-4. SOFT TOUCH SYSTEM INSTALLATION (OPTIONAL)

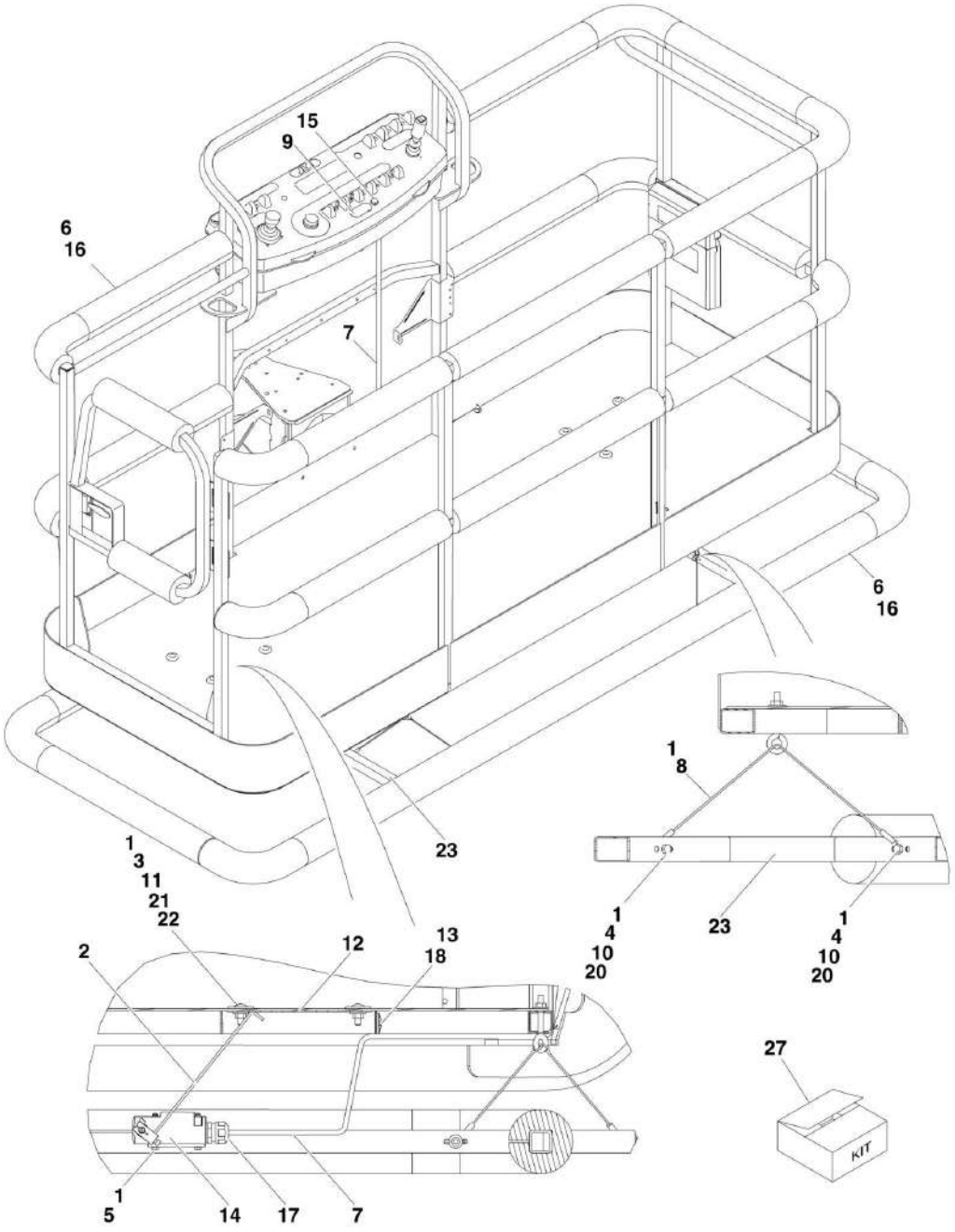

FIGURE 4-4. SOFT TOUCH SYSTEM INSTALLATION (OPTIONAL)

ITEM	PART NUMBER	QTY	DESCRIPTION	REV
		Ref	**Note: USA Built Machines Only.**	
		Ref	**Note: Fall Arrest Platforms available on ANSI & CSA Specs Only.**	
		Ref	**SOFT TOUCH SYSTEM INSTALLATION**	
	0274240	Ref	**2.5ft/.7m x 6ft/8m Platform**	B
	0274927	Ref	**3ft/.9m x 6ft/8m Fall Arrest Platform (Not Shown)**	A
1	0100011	AR	Compound, Locking	
2	0200048	2	Arm, Switch Activator	
3	0630462	8	Bolt, Carriage	
4	0641414	8	Bolt 1/4in-20NC x 1-3/4in	
5	0721005	4	Screw #10-32NF x 5/8in	
6	See Note	1	Bumper Soft Touch (Note: Use Item 27)	
7	1060341	Ref	Cable, Control - 16/2 Options:	
7	1060341	1	Cable, Control , 2.5ft/.7m x 6ft/8m Platform	
7	1060341	1	Cable, Control , 2.5ft/.7m x 6ft/8m Platform	
8	1060903	4	Wire Rope and Eyebolt Assembly	
9	1702938	1	Decal, Soft Touch Override	
10	3311401	8	Nut 1/4in-20NC	
11	3311501	8	Nut 5/16in-18NC	
12		Ref	Plate, Switch Strike Options:	
12	3575705	2	2.5ft/.7m x 6ft/8m Platform	
12	3575359	2	3ft/.9m x 6ft/8m Fall Arrest Platform	
13	4240099	1	Tie, Wire	
14	4360057	2	Switch, Limit	
15	4360387	1	Switch, Yellow Push Button	
16	4420068	1	Tape, Yellow Adhesive	
17	4460049	2	Connector, Strain Relief	
18	4460234	2	Terminal, Mount Cable Tie	
19	4460425	1	Terminal, Strain Relief (Not Shown)	
20	4751400	16	Flatwasher 1/4in Regular	
21	4751500	8	Flatwasher 5/16in Regular	
22	4751800	8	Flatwasher 1/2in Regular	
23		Ref	Weldment, Soft Touch Rail Options:	
23	4846370	1	2.5ft/.7m x 6ft/8m Platform	
23	3641569	1	3ft/.9m x 6ft/8m Fall Arrest Platform	
27		Ref	Bumper Kit Options (Includes Corners and Enough Straight Material for One Platform):	
27	0940167	1	2.5ft/.7m x 6ft/8m Platform	
27	0940177	1	3ft/.9m x 6ft/8m Fall Arrest Platform	

FIGURE 4-5. PLATFORM CONSOLE ASSEMBLY

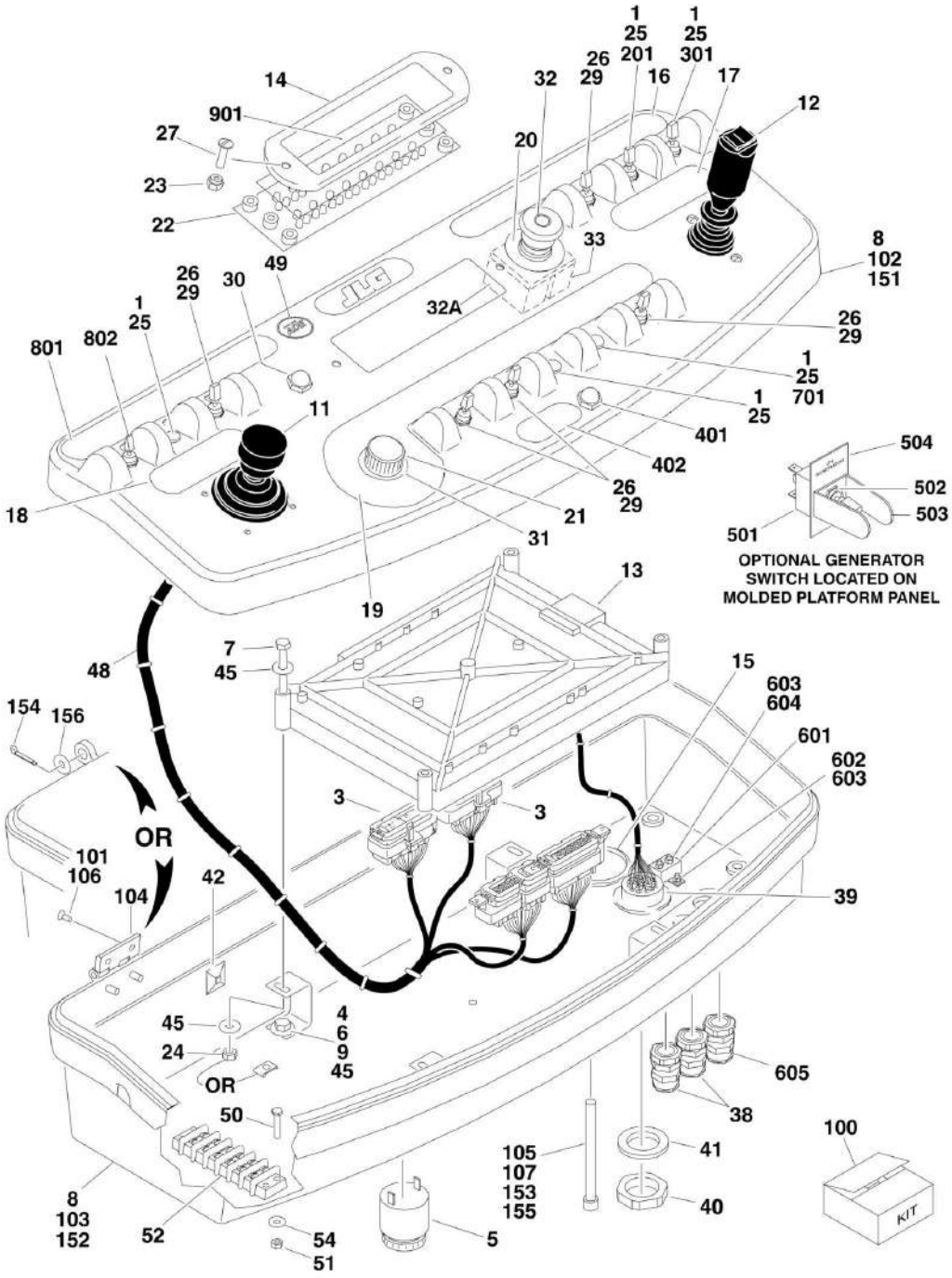

FIGURE 4-5. PLATFORM CONSOLE ASSEMBLY

ITEM	PART NUMBER	QTY	DESCRIPTION	REV
	0861512	Ref	**PLATFORM CONSOLE ASSEMBLY**	
1	0100009	AR	Sealant	
3	0100048	AR	Grease, Dielectric	
4	0100081	AR	Adhesive #454	
5	0140011	1	Alarm	
6	0641406	4	Bolt 1/4in-20NC x 3/4in	
7	0641416	4	Bolt 1/4in-20NC x 2in	
8		Ref	Box, Console Options:	
		Ref	**Note: For USA Built Machines SN 0300067695 to SN 0300068927 either p/n 0861441 or 0861414 Box may have been used. All USA manufactured machines SN 0300068927 to SN 03000123999 and all Belgium Machines use 0861441 Box.**	
8	0861441	1	Standard Box (See Items 151-156 for Breakdown)	
8	0861414	1	Optional Box (Used as a substitute on USA Built Machines) (See Items 101-108 for Breakdown) **(SN 0300067695 through 0300068927)**	
9	0902751	4	Bracket, Support	
11	1600317	NLA	Controller Assembly (Lift and Swing) (See CONTROLLER ASSEMBLY (LIFT AND SWING) for Breakdown) (Use p/n 1001129555)	
11	1001118417	NLA	Controller Assembly (Lift and Swing) (See CONTROLLER ASSEMBLY (LIFT AND SWING) for Breakdown) (Use p/n 1001129555)	
12	1600318	NLA	Controller Assembly (Drive and Steer) (See CONTROLLER ASSEMBLY (DRIVE AND STEER) for Breakdown) (Use p/n 1001212415)	
13		Ref	Controller, Module Options (Re-calibration Required when Replaced):	
13	1600320	NLA	USA Built Machines (Use p/n 1600376) **(SN 0300065080 through 0300078472)**	
13	1600376	1	USA Built Machines **(SN 0300078473 through 0300123999)**	
	1600320	NLA	Belgium Built Machines (Use p/n 1600376) **(Prior to SN 1300000353)**	
13	1600376	1	Belgium Built Machines **(SN 1300000353 through 1300006000)**	C
14	1671176	1	Bezel	
15	1671037	1	Cover	
16	1702564	NLA	Decal (Stop) (Use p/n 1704997)	
17	1702565	1	Decal (Drive and Steer)	
18	1702566	1	Decal (Lift and Swing)	
19	1702567	1	Decal (Function Speed)	
20	1704260	1	Decal - EMS	
21	2560136	1	Handle, Knob	
22	2920154	1	Panel, LED Light	
23	3300408	2	Insert, Nylon	
24		Ref	Nut Options:	
24	3311405	4	Locknut 1/4in-20NC (USA Built Machines) **(SN 0300065080 through 0300065160)**	
24	3300353	4	Nut, Tinnerman (USA Built Machines) **(SN 0300065161 through 0300123999)**	
24	3300353	1	Nut, Tinnerman (Belgium Built Machines)	
25	3520028	5	Plug, Hole 1/2in	
26	3790012	5	O-Ring	

ITEM	PART NUMBER	QTY	DESCRIPTION	REV
27	3911018	2	Screw, Round Head #10	
29	4360328	5	Switch, Toggle	
30	4360387	1	Switch, Pushbutton	
31	4360407	1	Controller, Speed	
31	See Note		Gasket "Top Hat" (Included W/Switch) (Note: Not Available - Purchase Complete Controller.)	
31	70003784	1	Seal	
32	4360475	1	Switch, Emergency Stop	
32	7020175	1	Cap, Red	
32A	7020176	1	Contact Block	
33	4360476	1	Block, Contact	
38	4460428	2	Connector, Strain Relief	
39	4460464	1	Terminal, Deutsch	
40	4460470	1	Nut, Terminal	
41	4460471	1	Lockwasher, Terminal	
42	4460488	1	Base, Mounting	
43	4460708	2	Receptacle - 15 Position (Not Shown)	
44	4460905	5	Seal, Plug (Not Shown)	
45	4751400	8	Flatwasher 1/4in Regular	
46	4922533	1	Harness, Upper Valve (Not Shown - See ELECTRICAL SECTION for Breakdown)	
47	4922666	1	Harness, Analyzer Cable (Not Shown - See ELECTRICAL SECTION for Breakdown)	
48	4922669	1	Harness, Platform Box (See ELECTRICAL SECTION for Breakdown)	
49	1705132	1	Decal - ADE Control (USA Built Machines) **(SN 0300065538 through 0300123999)**	
49	1705132	1	Decal - ADE Control (Belgium Built Machines)	
50	0721006	2	Screw, Machine #10-24NC x 3/4in	
51	3311005	2	Locknut #10-24NC	
52	4460007	1	Bussbar (USA Built Machines) **(SN 0300071527 through 0300123999)**	
52	4460007	1	Bussbar (Belgium Built Machines)	
54	4751000	2	Flatwasher #10 Regular	
100	2915133	1	Decal Kit (Includes Items 16-20, 49, 801 & 901)	
	0861414	Ref	**CONSOLE BOX ASSEMBLY**	C
		Ref	**See Note Under Item 8 for Usage.**	
101	0100011	AR	Compound, Locking	
102	0861414	1	Console Top (Note: Not available for purchase.)	
103	0861414	1	Console Bottom (Note: Not available for purchase.)	
104	2600211	2	Hinge	
105	3311601	1	Nut 3/8in-16NC	
106	3900224	8	Screw Countersunk	
107	3931672	1	Screw 3/8in-16NC x 4-1/2in	
108	3520174	3	Plug, Hole (Not Shown - Locate in Back of Lid)	
	0861441	Ref	**CONSOLE BOX ASSEMBLY**	C
		Ref	**See Note Under Item 8 for Usage.**	
151	0861441	1	Console Top (Note: Not available for purchase.)	
152	0861441	1	Console Bottom (Note: Not available for purchase.)	
153	3311601	1	Nut 3/8in-16NC	
154	3420156	2	Pin, Cotter	
155	0630568	1	Screw 3/8in-16NC x 4-1/2in	
156	4711500	2	Flatwasher 5/16in Thin	

ITEM	PART NUMBER	QTY	DESCRIPTION	REV
	0271019	Ref	**DUAL FUEL SWITCH INSTALLATION (FORD AND GM ENGINE MACHINES ONLY)**	4
	0271021	Ref	**DUAL FUEL SWITCH INSTALLATION (FORD AND GM ENGINE MACHINES ONLY)**	C
201	4360336	1	Switch, Toggle	
201	3790012	1	O-Ring	
	0271072	Ref	**HEAD AND TAIL LIGHTS INSTALLATION (OPTIONAL)**	2
301	4360336	1	Switch, Toggle	
301	3790012	1	O-Ring	
		Ref	**SOFT TOUCH SYSTEM INSTALLATION**	
	0274240	Ref	**2.5ft/.7m x 6ft/8m Platform**	B
	0274927	Ref	**3ft/.9m x 6ft/8m Fall Arrest Platform (Not Shown)**	A
401	4360387	1	Switch, Pushbutton	
402	1702938	1	Decal - Soft Touch Override	
		Ref	**GENERATOR INSTALLATION (OPTIONAL)**	
501	4360336	1	Switch, Toggle	
502	4740397	1	Bushing	
503	4060802	1	Guard, Switch	
504	3251102	1	Decal - Generator ON/OFF	
		Ref	**PLATFORM WORKLIGHT INSTALLATION (OPTIONAL)**	
	0270814	Ref	**USA Built Machines (SN 0300065080 through 0300074318)**	3-E
	0273495	Ref	**USA Built Machines (SN 0300074319 through 0300123999)**	A
	0270814	Ref	**Belgium Built Machines (Prior to SN 1300000138)**	3-E
	0273495	Ref	**Belgium Built Machines (SN 1300000138 through 1300006000)**	B
601	4360232	1	Breaker, Circuit - 15Amp (0270814 Installation Only)	
602	0721003	2	Bolt #10-24NC x 3/8in (0270814 Installation Only)	
603	4761000	4	Lockwasher #10 (0270814 Installation Only)	
604	3311001	2	Nut #10-24NC (0270814 Installation Only)	
605		Ref	Connector, Strain Relief Options:	
605	4460598	1	USA Built Machines **(SN 0300065080 through 0300074318)**	
605	4460426	1	USA Built Machines **(SN 0300074319 through 0300123999)**	
605	4460598	1	Belgium Built Machines **(Prior to SN 1300000138)**	
605	4460426	1	Belgium Built Machines **(SN 1300000138 through 130000600)**	
	0271340	Ref	**JIB SWITCH INSTALLATION (450AJ SERIES II ONLY)**	1-A
701	4360328	1	Switch, Toggle	
701	3790012	1	O-Ring	
		Ref	**DRIVE SWITCH INSTALLATION (FROM WHEEL DRIVE INSTALLATIONS)**	
801		Ref	Decal Options:	
801	1703689	NLA	Decal - 2WD (Use p/n 1702676)	
801	1702676	1	Decal - 4WD	
802		Ref	Switch, Toggle Options:	
802	4360336	1	Switch, Toggle (2WD) **(SN 0300065080 through 0300107511)**	
802	4360336	1	Switch, Toggle (2WD) **(Prior to SN 1300000162)**	
802	4360331	1	Switch, Toggle (2WD) **(SN 0300107512 through 0300123999)**	
802	4360331	1	Switch, Toggle (2WD) **(SN 1300000162 through 1300006000)**	
802	3790012	1	O-Ring	
		Ref	**LIGHT PANEL DECAL INSTALLATIONS**	
	0256632	Ref	**USA Built Machines (SN 0300065080 through 0300065314)**	-
	0272110	Ref	**USA Built Machines (SN 0300065315 through 0300123999)**	A
	0272110	Ref	**Belgium Built Machines**	A
901		Ref	Decal - Display Options:	

SECTION 4 - PLATFORM

ITEM	PART NUMBER	QTY	DESCRIPTION	REV
901	1703084		USA Built Machines **(SN 0300065080 through 0300065214)**	
901	1705212		USA Built Machines **(SN 0300065215 through 0300123999)**	
901	1705212		Belgium Built Machines	

FIGURE 4-6. CONTROLLER ASSEMBLY (SWING AND LIFT) (ORIGINAL EQUIPMENT)

Note: Original Equipment controller may have been replaced with Service Replacement controller. Visually identify controller before ordering parts.

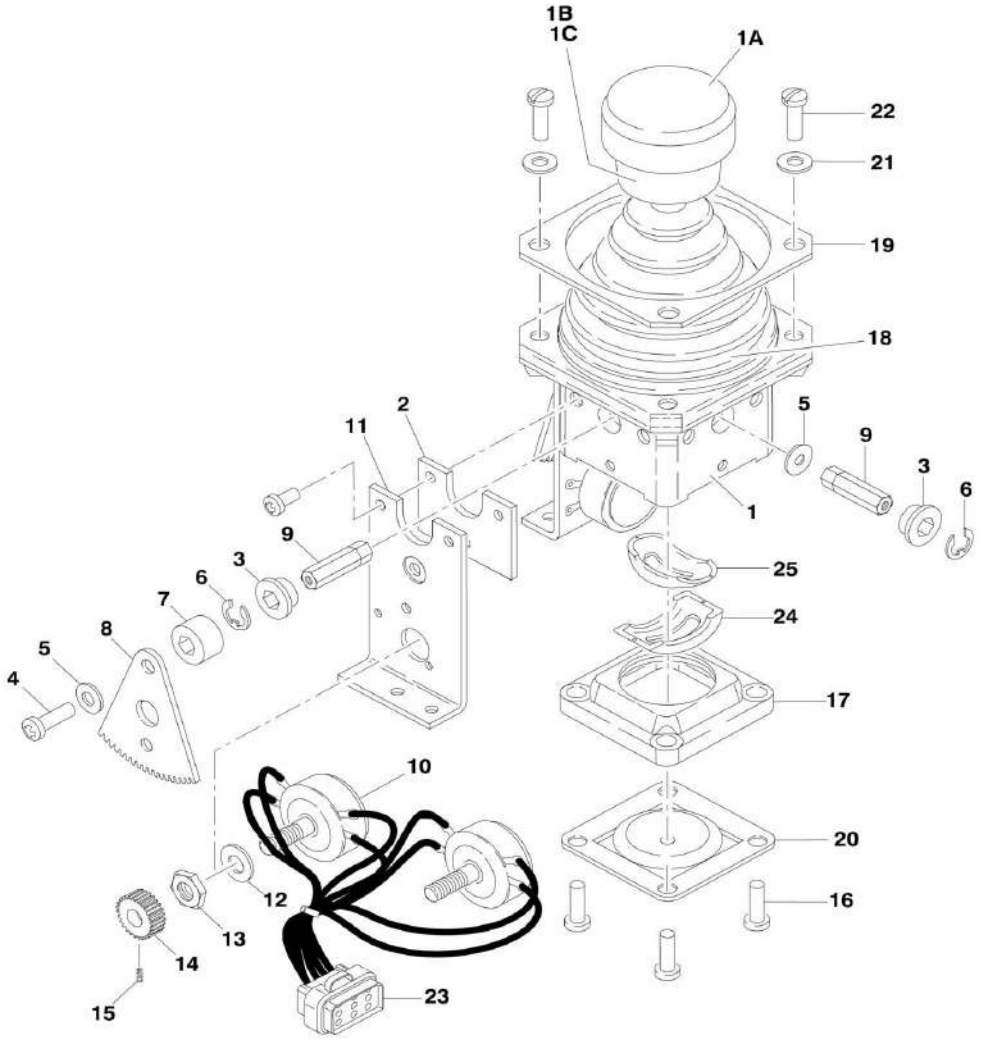

FIGURE 4-6. CONTROLLER ASSEMBLY (SWING AND LIFT) (ORIGINAL EQUIPMENT)

ITEM	PART NUMBER	QTY	DESCRIPTION	REV
		Ref	**Note: Original Equipment controller may have been replaced with Service Replacement controller. Visually identify controller before ordering parts.**	
	1600317	Ref	**CONTROLLER ASSEMBLY (ORIGINAL EQUIPMENT)**	B
		Ref	**Note: Purchase Controller Kit p/n 1001129555 for Complete Controller Replacement.**	
1	7019141	1	Mechanical Assembly (Includes Base, Handle Stem and Items 1A, 1B, 1C & 18)	
1A	7019197	1	Handle Cap and Rod	
1B	7003928	1	Spring	
1C	7022808	1	Cap, Lift	
2	7019171	2	Plate	
3	7019111	4	Bearing, Gear	
4	7019143	2	Screw	
5	7019144	2	Spacer, Cam	
6	7019145	4	E-Clip	
7	7019174	2	Spacer	
8	7003977	2	Gear, Drive	
9		Ref	Shaft Options:	
9	7019147	2	Shaft, Short	
9	7019177	2	Shaft, Long	
10	7022818	2	Potentiometer	
11	7019142	2	Plate	
12	7003992	2	Washer	
13	7003993	2	Nut	
14	7003976	2	Gear, Slave	
15	7019149	2	Setscrew	
16	7022816	4	Screw	
17	7019150	1	Gate	
18	7022814	1	Boot	
19	7022815	1	Bezel	
20	See Note	NSS	Center, Detent (Note: Use p/n 1001129555)	
21	7003953	4	Washer	
22	7022817	4	Screw	
23	7022819	1	Plug, Male 8 Position (Natural)	
23	4460871	8	Socket, Female	
24	7019122	1	Gimble, Outer	
25	7019123	1	Gimble, Inner	

FIGURE 4-7. CONTROLLER ASSEMBLY (LIFT AND SWING) (SERVICE REPLACEMENT)

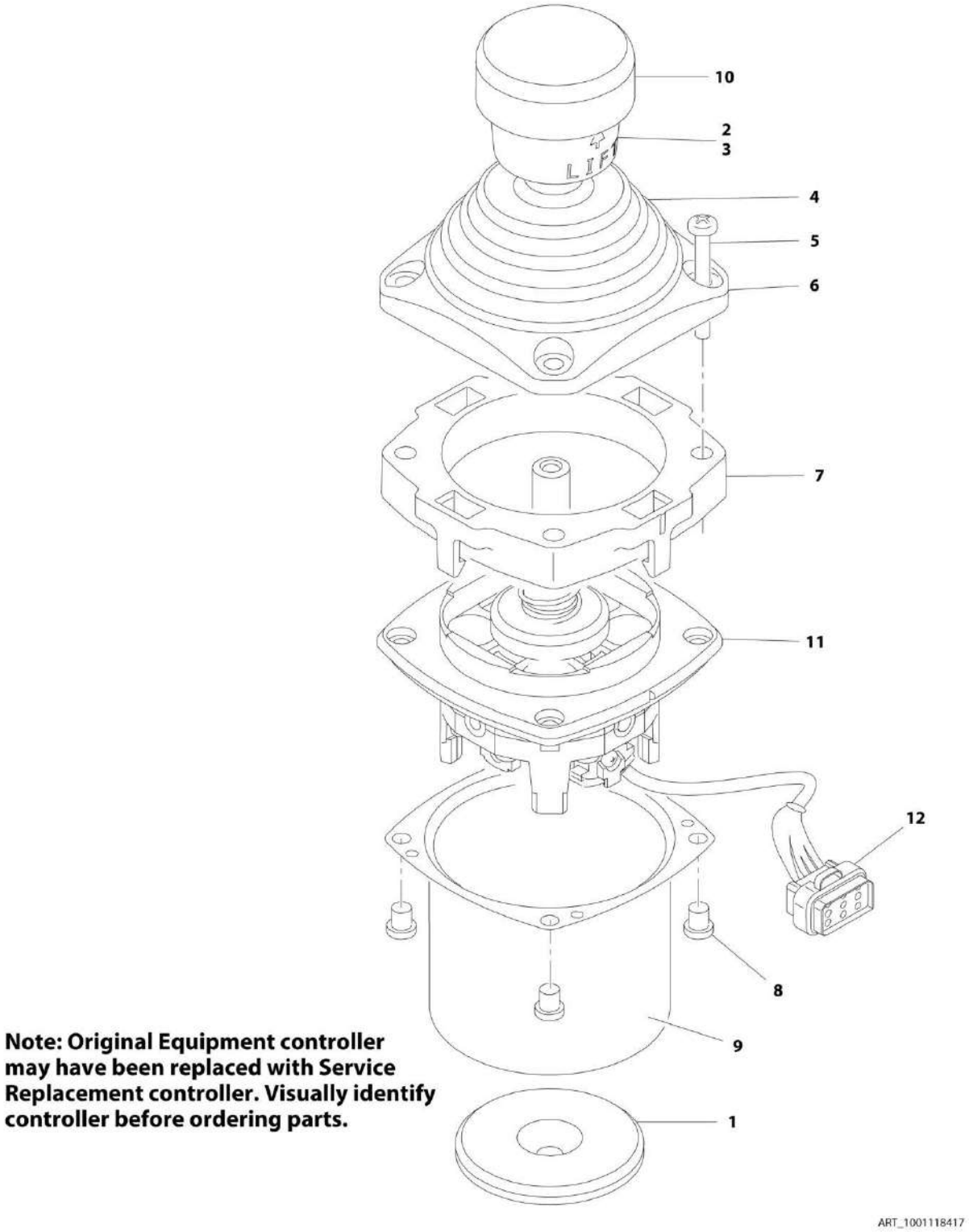

Note: Original Equipment controller may have been replaced with Service Replacement controller. Visually identify controller before ordering parts.

FIGURE 4-7. CONTROLLER ASSEMBLY (LIFT AND SWING) (SERVICE REPLACEMENT)

ITEM	PART NUMBER	QTY	DESCRIPTION	REV
		Ref	**Note: Original Equipment controller may have been replaced with Service Replacement controller. Visually Identify controller before ordering parts.**	
	1001118417	Ref	**CONTROLLER ASSEMBLY (LIFT AND SWING) (SERVICE REPLACEMENT)**	A
		Ref	**Note: Use p/n 1001129555 as Replacement.**	
1	70002730	1	Gasket	
2	7003928	1	Spring	
3	7022808	1	Cap, Lift	
4	70002731	1	Boot	
5	70002732	4	Screw	
6	7022815	1	Bezel	
7	70002733	1	Adapter	
8	70002734	4	Screw	
9	70002735	1	Can, Enclosure	
10	70002906	1	Cap	
11	See Note	NSS	Mechanical Assembly (Note: Use p/n 1001129555)	
12	7022819	1	Connector - 8 Position	
12	4460871	6	Socket, Female	

FIGURE 4-8. CONTROLLER ASSEMBLY (LIFT AND SWING) (SERVICE REPLACEMENT)

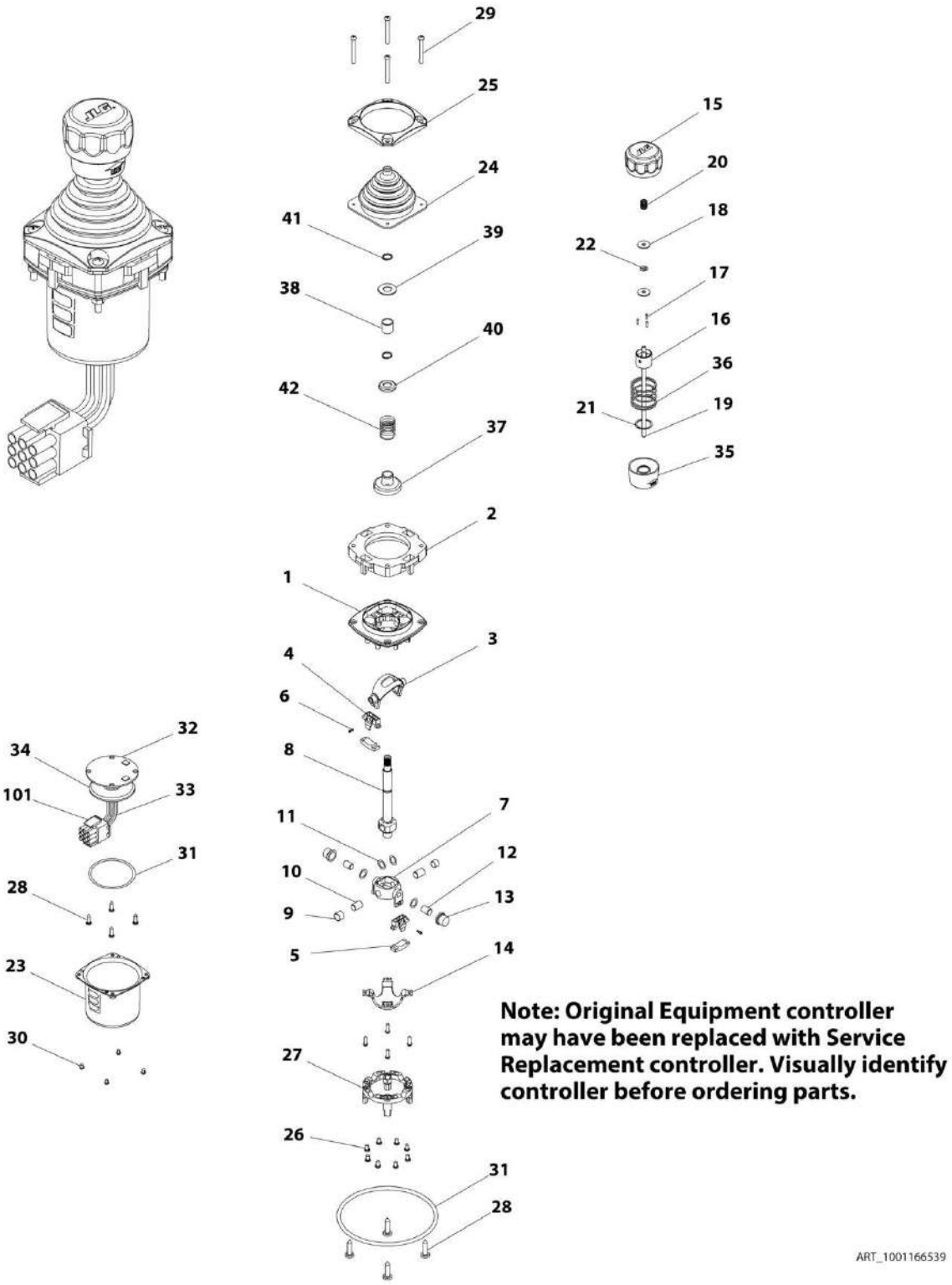

FIGURE 4-8. CONTROLLER ASSEMBLY (LIFT AND SWING) (SERVICE REPLACEMENT)

ITEM	PART NUMBER	QTY	DESCRIPTION	REV
		Ref	**Note: Original Equipment controller may have been replaced with Service Replacement controller. Visually identify controller before ordering parts.**	
	1001166539	Ref	**CONTROLLER ASSEMBLY (LIFT AND SWING) (SERVICE REPLACEMENT)**	A
		Ref	**Note: Use p/n 1001129555 as Replacement.**	
1	See Note	1	Main Cast Body (Note: Not Available - Purchase Complete Assembly)	
2	70004752	1	Adapter	
3	See Note	NSS	Pivot Arm, Plastic (Note: Not Available - Purchase Complete Assembly)	
4	See Note	NSS	Holder, Magnet (Note: Not Available - Purchase Complete Assembly)	
5	See Note	NSS	Arc, Magnet (Note: Not Available - Purchase Complete Assembly)	
6	See Note	NSS	Screw (Note: Not Available for Purchase)	
7	See Note	NSS	Pivot Arm, Cast (Note: Not Available - Purchase Complete Assembly)	
8	See Note	NSS	Shaft, Main (Note: Not Available - Purchase Complete Assembly)	
9	See Note	NSS	Bearing (Note: Not Available - Purchase Complete Assembly)	
10	See Note	NSS	Pin (Note: Not Available - Purchase Complete Assembly)	
11	See Note	NSS	Shim (Note: Not Available - Purchase Complete Assembly)	
12	See Note	NSS	Pin (Note: Not Available - Purchase Complete Assembly)	
13	See Note	NSS	Bearing (Note: Not Available - Purchase Complete Assembly)	
14	See Note	NSS	Dome, Centering (Note: Not Available - Purchase Complete Assembly)	
15	70004753	1	Cap	
16	70004754	1	Insert, Cap	
17	70004755	3	Pin	
18	70004756	2	Washer	
19	70004757	1	Pin, Centering	
20	70004758	1	Spring	
21	70004759	1	Ring, Retaining	
22	70004760	1	E-Ring	
23	70004761	1	Can, Enclosure	
24	70004762	1	Boot	
25	70004763	1	Bezel	
26	See Note	NSS	Screw (Note: Not Available for Purchase)	
27	See Note	NSS	Base Mounting (Note: Not Available - Purchase Complete Assembly)	
28	See Note	NSS	Screw (Note: Not Available for Purchase)	
29	70004764	4	Screw	
30	70004765	4	Screw	
31	70004766	1	O-Ring	
32	See Note	NSS	Plate (Note: Not Available - Purchase Complete Assembly)	
33	See Note	NSS	Harness (Note: Not Available - Purchase Complete Assembly)	
34	70004767	1	Grommet, Rubber	
35	70004768	1	Housing	
36	70004769	1	Spring	
37	70004770	1	Stopper	
38	70004771	1	Spacer	
39	70004772	1	Washer	
40	70004773	1	Disc	

ITEM	PART NUMBER	QTY	DESCRIPTION	REV
41	70004774	2	Ring, Retaining	
42	70004775	1	Spring	
101	4460265	1	Connector - 9 Position	
101	4460226	6	Socket, Female	

FIGURE 4-9. CONTROLLER ASSEMBLY (DRIVE AND STEER) (ORIGINAL EQUIPMENT)

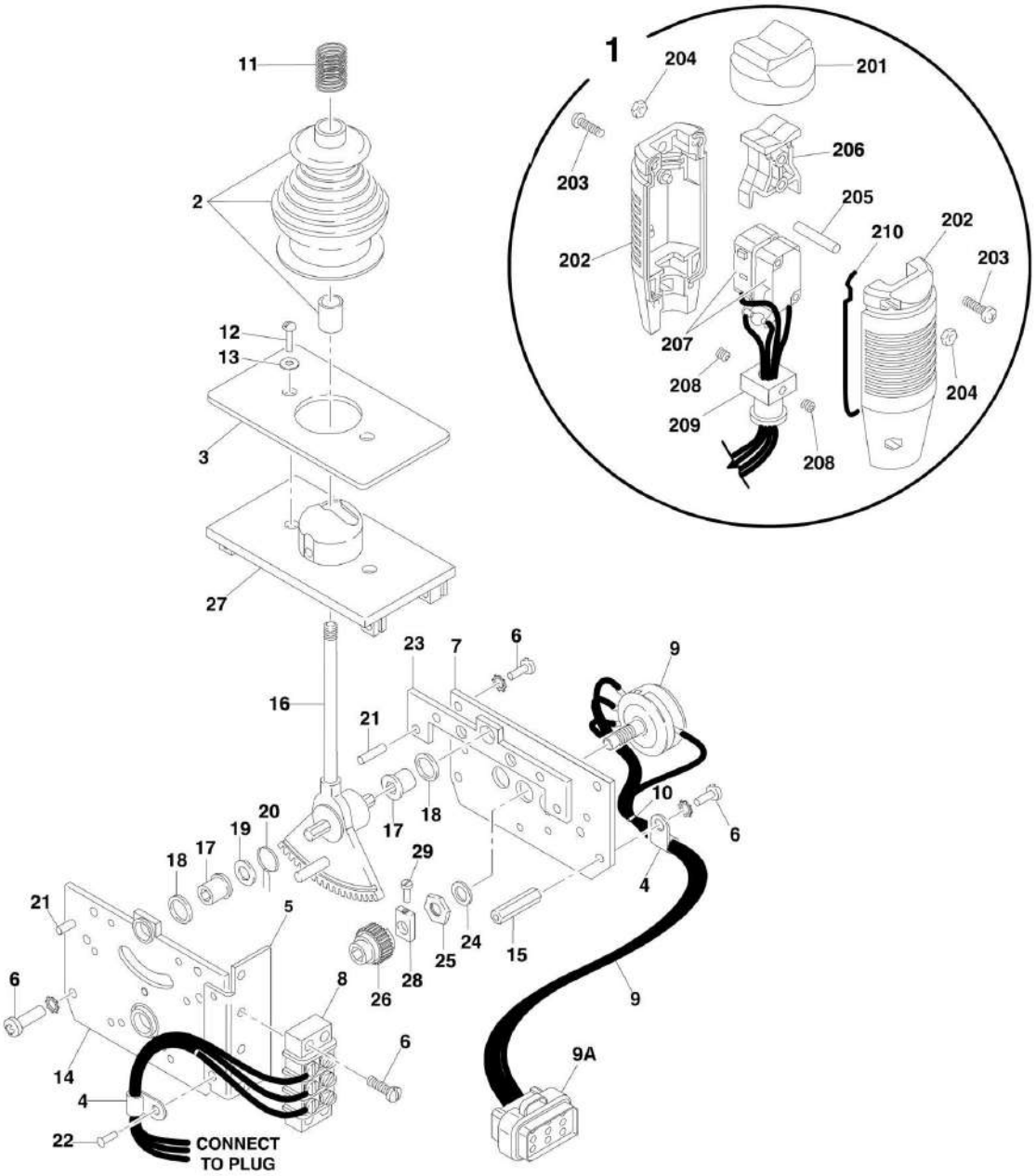

Note: Original Equipment controller may have been replaced with Service Replacement controller. Visually identify controller before ordering parts.

FIGURE 4-9. CONTROLLER ASSEMBLY (DRIVE AND STEER) (ORIGINAL EQUIPMENT)

ITEM	PART NUMBER	QTY	DESCRIPTION	REV
		Ref	**Note: Original Equipment controller may have been replaced with Service Replacement controller. Visually identify controller before ordering parts.**	
	1600318	Ref	**CONTROLLER ASSEMBLY (ORIGINAL EQUIPMENT)**	C
		Ref	**Note: Use p/n 1001212415 as Replacement.**	
1	7022812	1	Handle Assembly (See Items 201-210 for Breakdown)	
2	7019161	1	Boot and Sleeve	
3	7003933	1	Gasket	
4	7019154	2	Clamp, Wire	
5	7022823	1	Bracket, Mounting	
6	7003994	1	Screw	
7	7022822	1	Plate, Pot Mounting	
8	7003986	1	Strip, Terminal - 3 Position	
9	7022824	1	Electric Assembly	
9A	1001113961	1	Plug, Male - 8 Position (Black) (was p/n 7022825)	
9A	4460871	7	Socket, Female	
10	7019151	AR	Tie-Strap	
11	7019162	1	Spring	
12	7003969	2	Screw	
13	7003941	2	Washer	
14	See Note	NSS	Plate, Mounting (Left Side) (Note: Not Available for Purchase)	
15	7019115	2	Stand-Off	
16	7019155	1	Shaft 8mm	
17	7019111	2	Bearing	
18	7019110	2	Spacer, Head Gear	
19	7019112	1	Washer	
20	7003946	1	Spring, Return	
21	7019103	4	Pin	
22	See Note	1	Rivet (Note: Not Available - Purchase Locally)	
23	7019168	1	Plate, Mounting (Right Side)	
24	7003992	1	Washer	
25	7003993	1	Nut	
26	7003935	1	Gear, Slave	
27	7019160	1	Plate, Base	
28	7019114	1	Coupling, Potentiometer	
29	See Note	1	Screw, Cup Point (Note: Not Available - Purchase Locally)	
	7022812	Ref	**HANDLE ASSEMBLY**	
201	7003972	1	Boot, Switch	
202	7003973	2	Half, Handle	
203	7003980	4	Screw	
204	7019167	4	Nut	
205	7019164	1	Axle	
206	7019165	1	Rocker	
207	7019196	1	Wiring Assembly	
207	7019166	2	Switch, Micro	
208	7003983	2	Setscrew	
209	7019194	1	Coupling	
210	7003989	2	Gasket	

FIGURE 4-10. CONTROLLER ASSEMBLY (DRVIE AND STEER) (SERVICE REPLACEMENT)

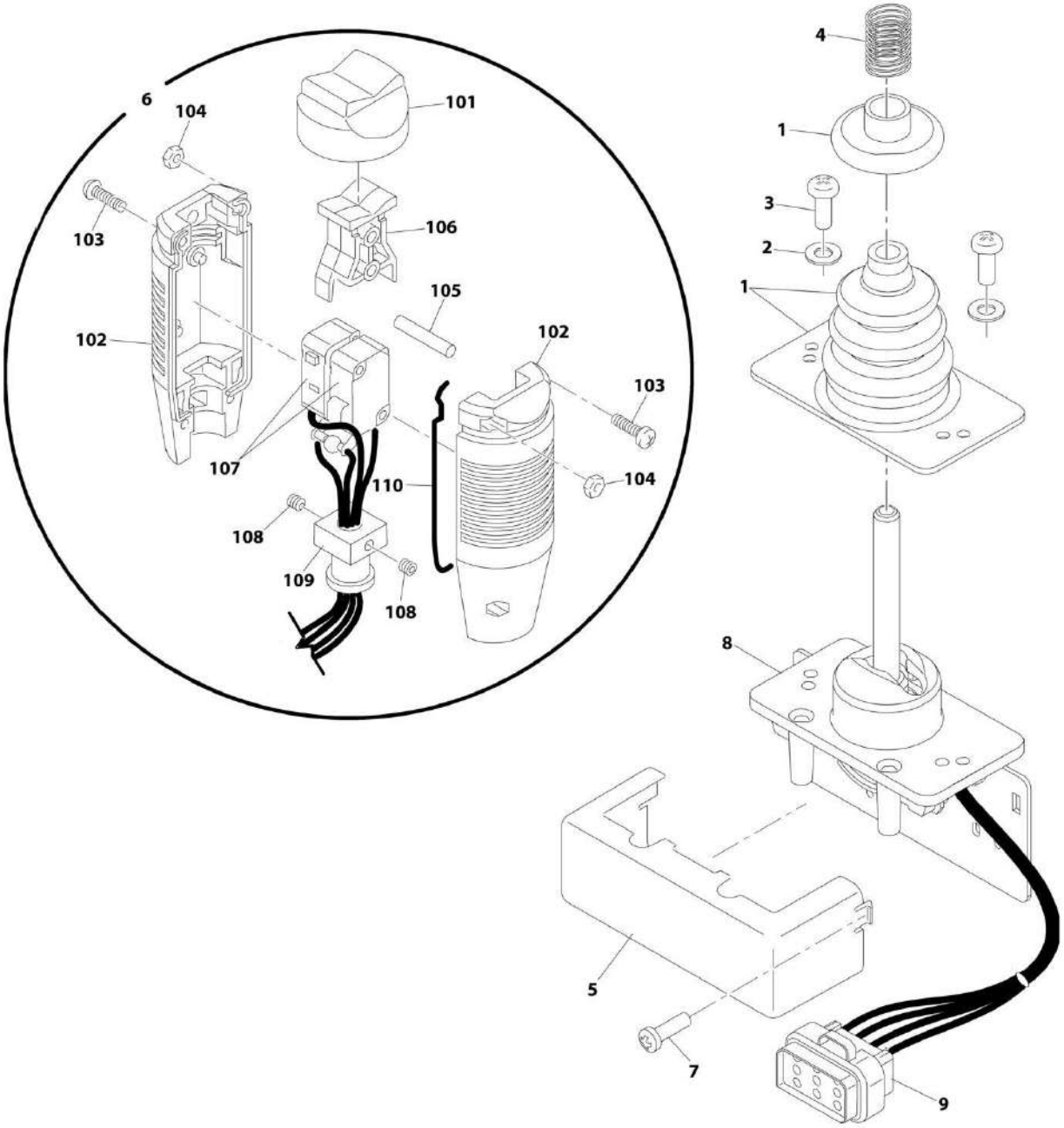

Note: Original Equipment controller may have been replaced with Service Replacement controller. Visually identify controller before ordering parts.

FIGURE 4-10. CONTROLLER ASSEMBLY (DRVIE AND STEER) (SERVICE REPLACEMENT)

ITEM	PART NUMBER	QTY	DESCRIPTION	REV
		Ref	**Note: Original Equipment controller may have been replaced with Service Replacement controller. Visually identify controller before ordering parts.**	
	1001118416	Ref	**CONTROLLER ASSEMBLY (DRIVE AND STEER) (SERVICE REPLACEMENT)**	A
		Ref	**Note: Use p/n 1001212415 as Replacement.**	
1	70002724	1	Boot and Control Lock Assembly	
2	7003941	2	Washer	
3	70002725	2	Screw	
4	7019162	1	Spring	
5	70002726	1	Enclosure	
6	70002727	1	Handle Assembly (See Items 101-110 for Breakdown)	
7	70002728	1	Screw	
8	See Note	NSS	Mechanical Assembly (Note: Not Available for Purchase)	
9	1001113961	1	Plug, Male - 8 Position (Black) (was p/n 7022825)	
9	4460871	7	Socket, Female	
	70002727	Ref	**HANDLE ASSEMBLY**	
101	7003972	1	Boot, Switch	
102	7003973	2	Half, Handle	
103	7003980	4	Screw	
104	7019167	4	Nut	
105	7019164	1	Axle	
106	7019165	1	Rocker	
107	70002729	1	Wiring Assembly	
107	7003982	2	Switch, Micro	
108	7003983	2	Setscrew	
109	7019194	1	Coupling	
110	7003989	2	Gasket	

FIGURE 4-11. CONTROLLER ASSEMBLY (DRIVE AND STEER) (SERVICE REPLACEMENT)

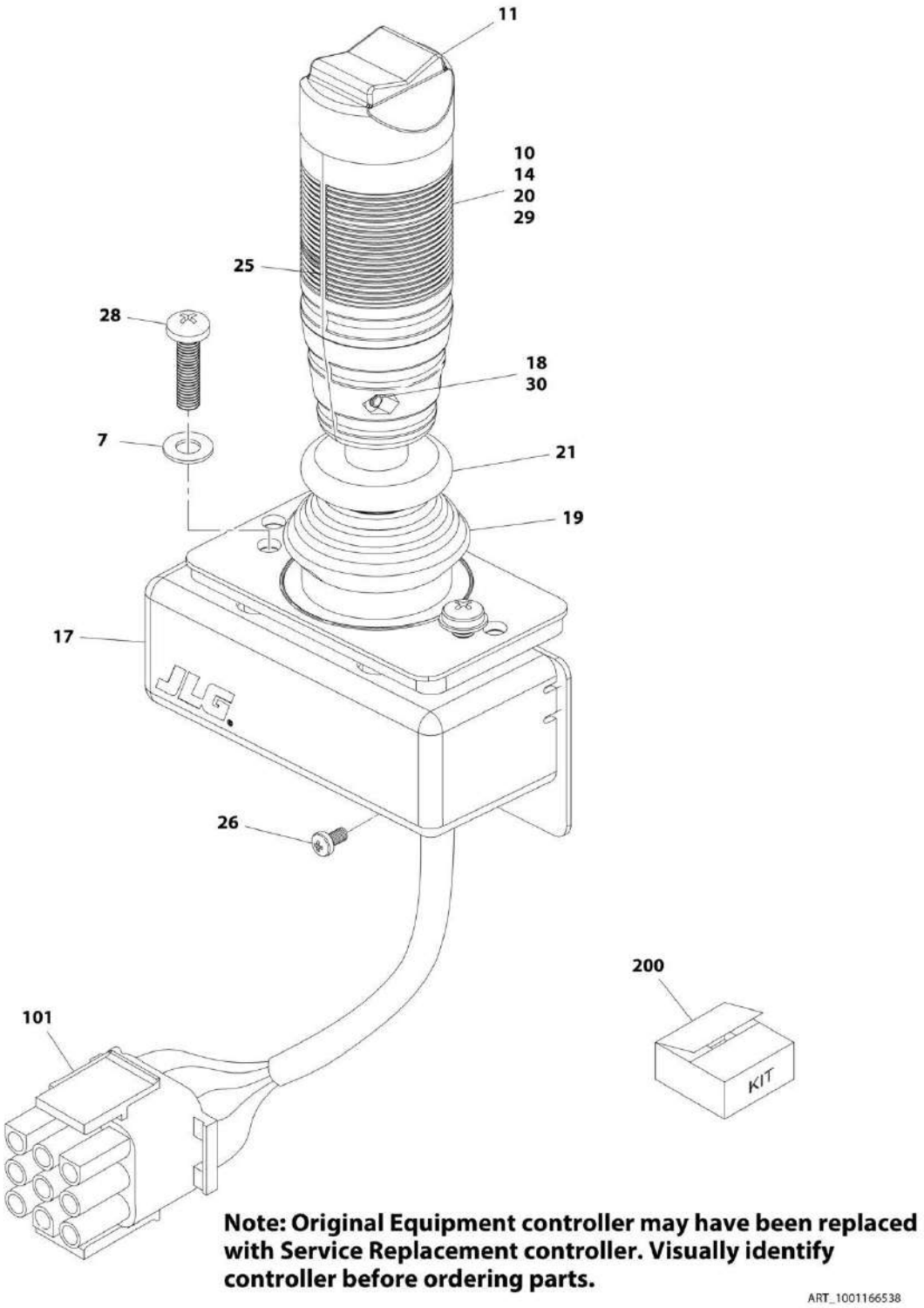

FIGURE 4-11. CONTROLLER ASSEMBLY (DRIVE AND STEER) (SERVICE REPLACEMENT)

ITEM	PART NUMBER	QTY	DESCRIPTION	REV
		Ref	**Note: Original Equipment controller may have been replaced with Service Replacement controller. Visually identify controller before ordering parts.**	
	1001166538	Ref	**CONTROLLER ASSEMBLY (DRIVE AND STEER) (SERVICE REPLACEMENT)**	A
		Ref	**Note: Use p/n 1001212415 as Replacement.**	
7	70004738	2	Washer	
10	70004739	1	Roller	
11	70004740	1	Boot, Switch	
14	70004741	2	Half, Handle	
17	70004742	1	Enclosure	
18	70004743	4	Nut	
19	70004744	NLA	Boot, Controller (Note: Use Item 200)	
20	70004745	NLA	Tube, Locking (Note: Use Item 200)	
21	70004746	NLA	Disc, Locking (Note: Use Item 200)	
25	70004747	2	Seal, Rope	
26	70004748	1	Screw, M3 x 6	
28	70004749	2	Screw, M5 x 20	
29	70004750	1	Pin, Dowel	
30	70004751	4	Screw, M3 x 16	
101	4460265	1	Connector - 9 Position	
101	4460226	7	Socket, Female	
200	70005230	1	Boot Kit (Includes Items 19-21)	

FIGURE 4-12. SKYGLAZIER INSTALLATION - WITHOUT LSS (ANSI, CSA AND AUSTRALIAN SPECS)

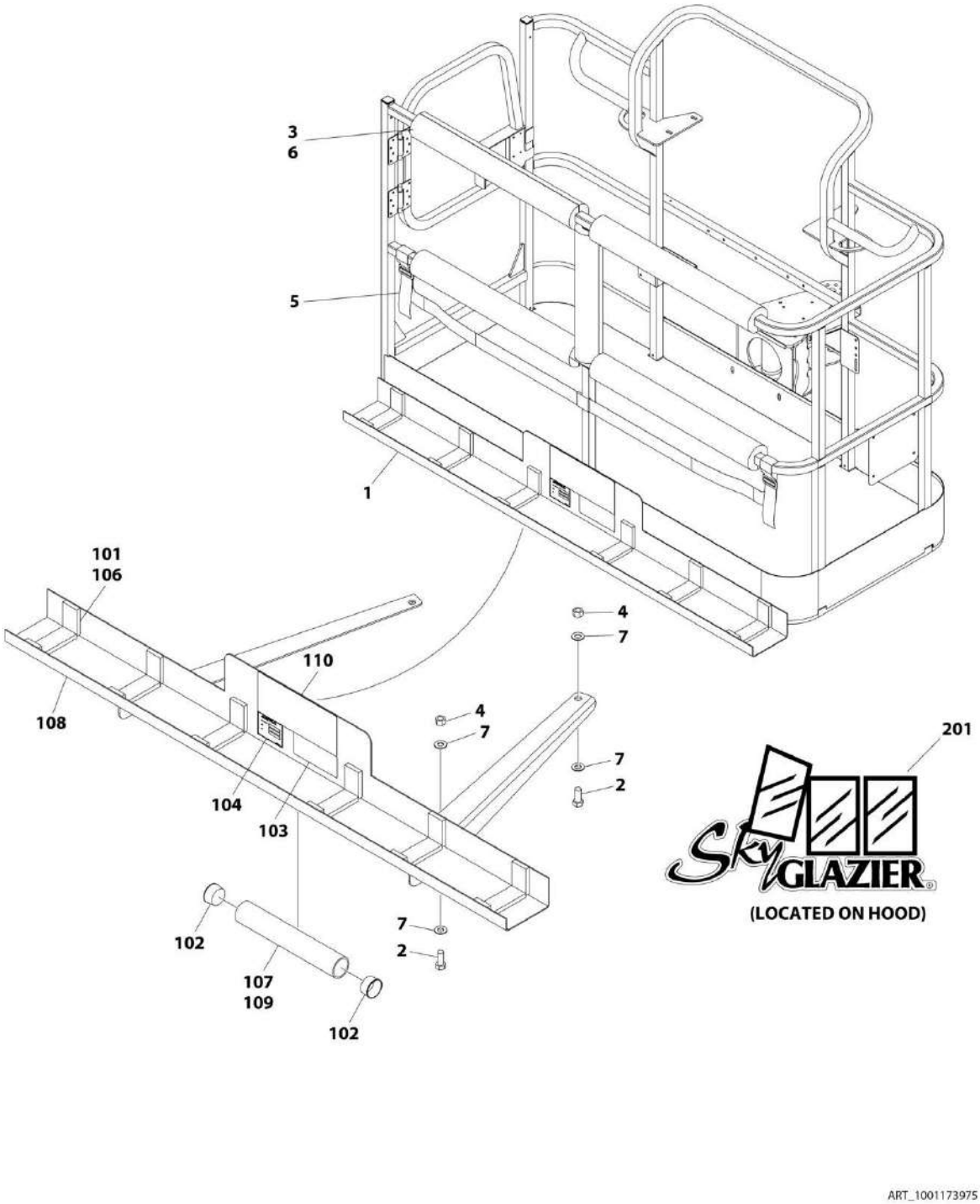

FIGURE 4-12. SKYGLAZIER INSTALLATION - WITHOUT LSS (ANSI, CSA AND AUSTRALIAN SPECS)

ITEM	PART NUMBER	QTY	DESCRIPTION	REV
	1001101423	Ref	**SKYGLAZIER INSTALLATION**	A
1	1001101424	1	Tray Assembly (See Items 101-110 for Breakdown)	
2	0642012	4	Bolt 5/8 x 1-1/2	
3	0940199	1	Bumper Kit	
4	3312005	4	Nut 5/8	
5	4240149	1	Strap Kit	
6	4420014	AR	Tape	
7	4712000	8	Washer 5/8	
	1001101424	Ref	**TRAY ASSEMBLY**	A
101	0100081	AR	Adhesive	
102	1120555	2	Cap, Tube	
103	1701509	1	Decal - Manual	
104	See Note	NSS	Nameplate - Serial Number (Note: Not Available for Purchase)	
106	3340956	1	Pad Kit	
107	3460334	1	Tube	
108	4341415	1	Support	
109	4420066	AR	Tape, Double Sided	
110	1001102446	1	Decal - Glazier Capacity	
201	1705358	2	Decal - SkyGlazier	

FIGURE 4-13. SKYGLAZIER INSTALLATION - WITH LSS (AUSTRALIAN SPECS)

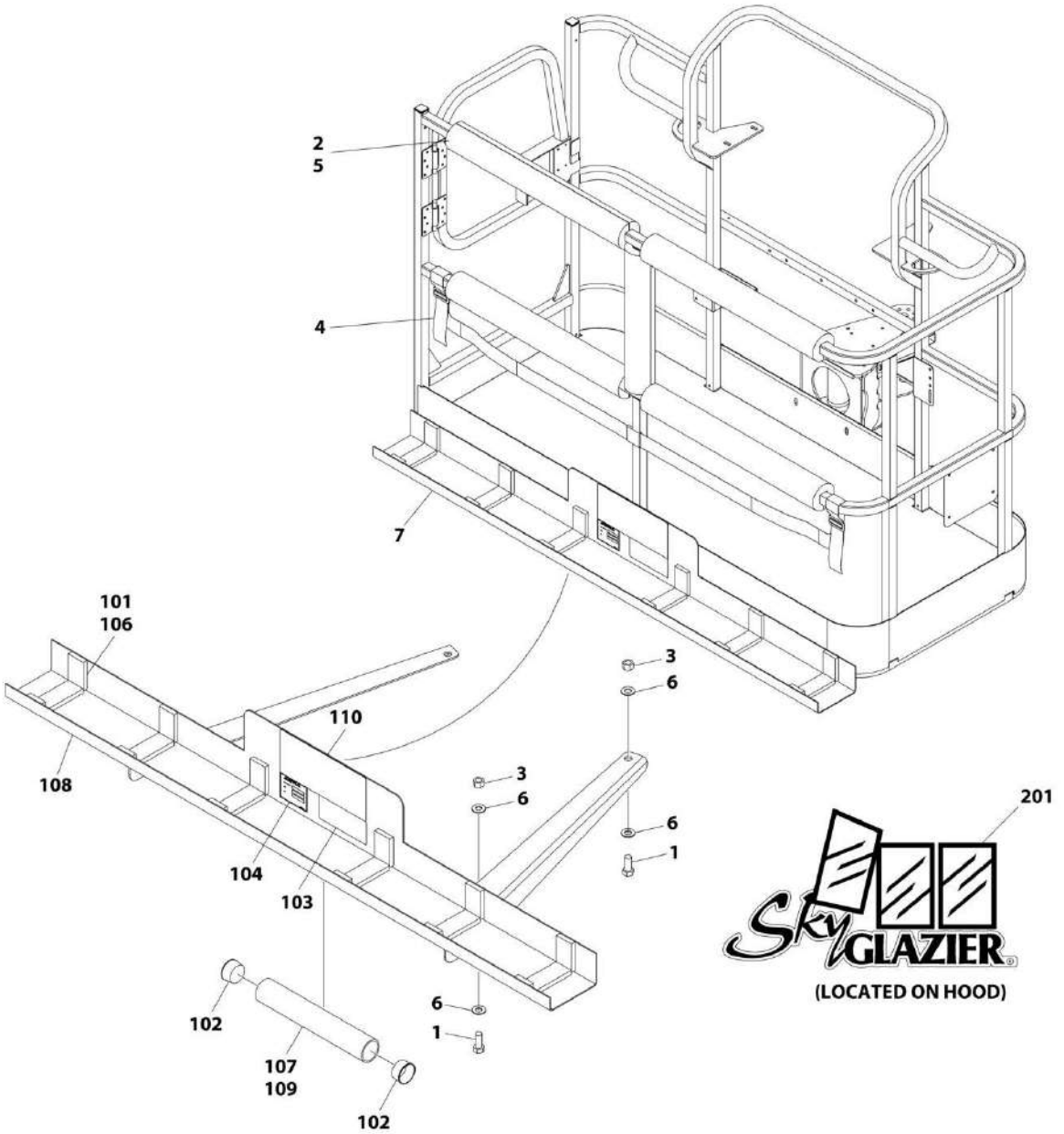

FIGURE 4-13. SKYGLAZIER INSTALLATION - WITH LSS (AUSTRALIAN SPECS)

ITEM	PART NUMBER	QTY	DESCRIPTION	REV
	1001102648	Ref	**SKYGLAZIER INSTALLATION**	A
1	0642026	4	Bolt 5/8 x 3-1/4	
2	0940199	1	Bumper Kit	
3	3312005	4	Nut 5/8	
4	4240149	1	Strap Kit	
5	4420014	AR	Tape	
6	4712000	8	Washer 5/8	
7	1001101424	1	Tray Assembly (See Items 101-110 for Breakdown)	
	1001101424	Ref	**TRAY ASSEMBLY**	A
101	0100081	AR	Adhesive	
102	1120555	2	Cap, Tube	
103	1701509	1	Decal - Manual	
104	See Note	NSS	Nameplate - Serial Number (Note: Not Available for Purchase)	
106	3340956	1	Pad Kit	
107	3460334	1	Tube	
108	4341415	1	Support	
109	4420066	AR	Tape, Double Sided	
110	1001102446	2	Decal - Glazier Capacity	
201	1705358	2	Decal - SkyGlazier	

FIGURE 4-14. SKYWELDER INSTALLATION (50HZ)

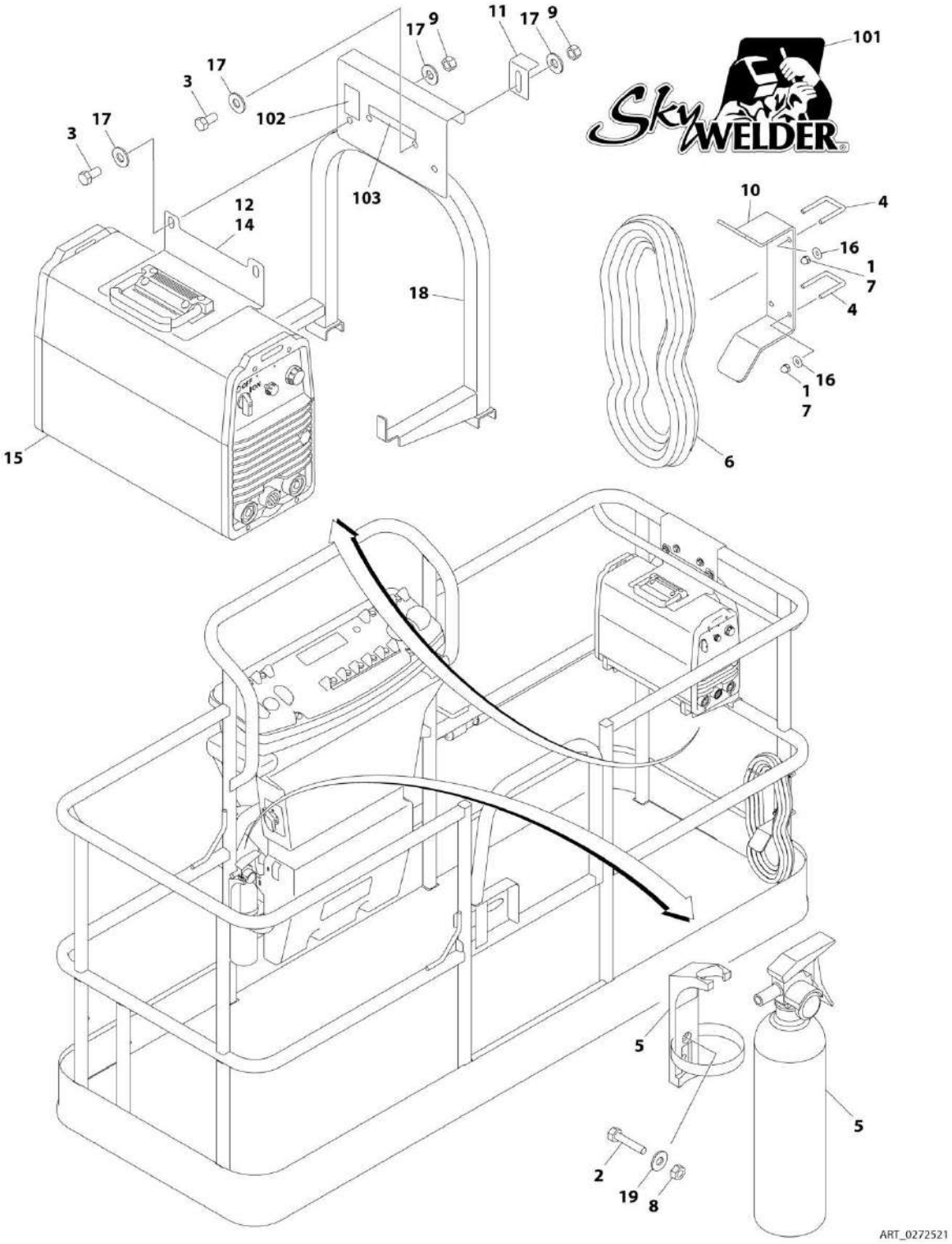

FIGURE 4-14. SKYWELDER INSTALLATION (50HZ)

ITEM	PART NUMBER	QTY	DESCRIPTION	REV
	0272521	Ref	**SKYWELDER INSTALLATION (50HZ)**	F
1	0100011	AR	Compound, Locking	
2	0641406	2	Bolt 1/4 x 3/4	
2	0630518	2	Screw #10 x 3/4	
3	0641606	4	Bolt 3/8 x 3/4	
4	1320302	2	U-Clamp	
5	2030010	1	Extinguisher, Fire	
6	2902217	1	Weld Leads Kit	
7	3300151	4	Nut 1/4	
8	3311405	2	Nut 1/4	
8	3311005	2	Nut #10	
9	3311605	4	Nut 3/8	
10	3573400	1	Bracket	
11	3577121	2	Angle	
12	3573642	1	Plate	
13	4240099	AR	Tie-Strap (Not Shown)	
14	4420037	AR	Tape	
15		Ref	Welder Assembly Options (See WELDER ASSEMBLY for Breakdown):	
15	4530022	1	Miller Model CST250 **(SN 0300065080 through 0300083532)**	
15	4530028	1	Miller Model CST280 **(SN 0300083533 through 0300123999)**	
16	4751400	4	Washer 1/4	
17	4751600	8	Washer 3/8	
18	4846627	1	Support	
19	4751000	2	Washer #10	
	0272588	Ref	**SKYWELDER DECAL INSTALLATION**	A
101	1705355	2	Decal - SkyWelder	
102	1705305	1	Decal - Weld Lead	
103	1705466	1	Decal - Weight	

FIGURE 4-15. SKYWELDER INSTALLATION (60HZ)

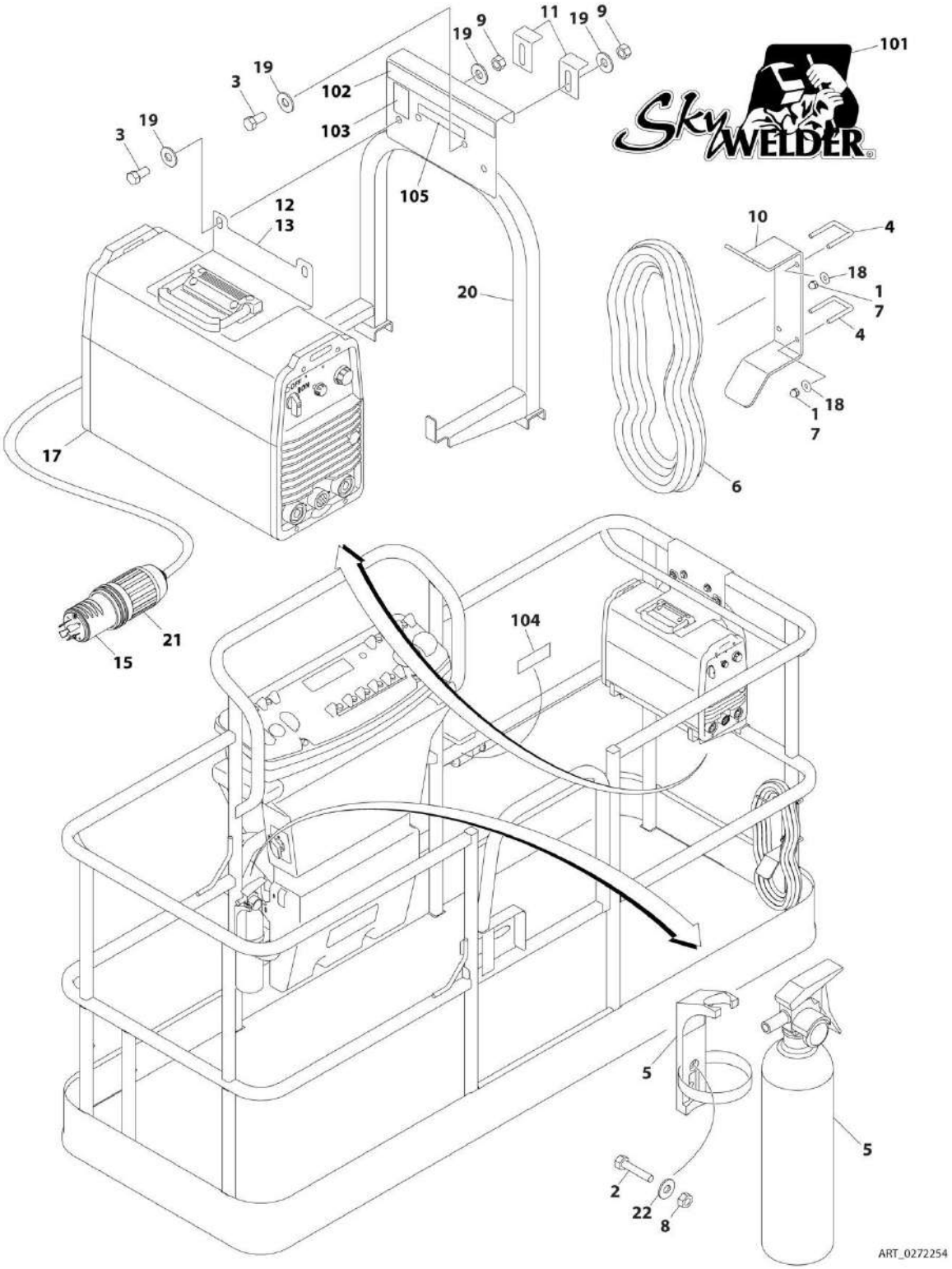

FIGURE 4-15. SKYWELDER INSTALLATION (60HZ)

ITEM	PART NUMBER	QTY	DESCRIPTION	REV
	0272254	Ref	**SKYWELDER INSTALLATION (60HZ)**	H
1	0100011	AR	Compound, Locking	
2	0641406	2	Bolt 1/4 x 3/4	
2	0630518	2	Screw #10 x 3/4	
3	0641606	4	Bolt 3/8 x 3/4	
4	1320302	2	U-Clamp	
5	2030010	1	Extinguisher, Fire	
6	2902217	1	Weld Leads Kit	
7	3300151	4	Nut 1/4	
8	3311405	2	Nut 1/4	
8	3311005	2	Nut #10	
9	3311605	4	Nut 3/8	
10	3573400	1	Bracket	
11	3573641	NLA	Angle (Use p/n 3577121)	
12	3573642	1	Plate	
13	4420037	AR	Tape	
14	4240099	AR	Tie-Strap (Not Shown)	
15	4460962	1	Plug, Male Twistlock	
17		Ref	Welder Assembly Options (See WELDER ASSEMBLY for Breakdown):	
17	4530022	1	Miller Model CST250 **(SN 0300065080 through 0300083532)**	
17	4530028	1	Miller Model CST280 **(SN 0300083533 through 0300123999)**	
18	4751400	4	Washer 1/4	
19	4751600	8	Washer 3/8	
20	4846627	1	Support	
21	1671093	1	Cover, Plug	
22	4751000	2	Washer #10	
	0272448	Ref	**SKYWELDER DECAL INSTALLATION**	A
101	1705355	2	Decal - SkyWelder	
102	1702868	1	Decal - No Hands	
103	1705305	1	Decal - Weld Lead	
104	1705375	1	Decal - 240V - 3 Phase - 60Hz	
105	1705466	1	Decal - Weight	

FIGURE 4-16. WELDER ASSEMBLY

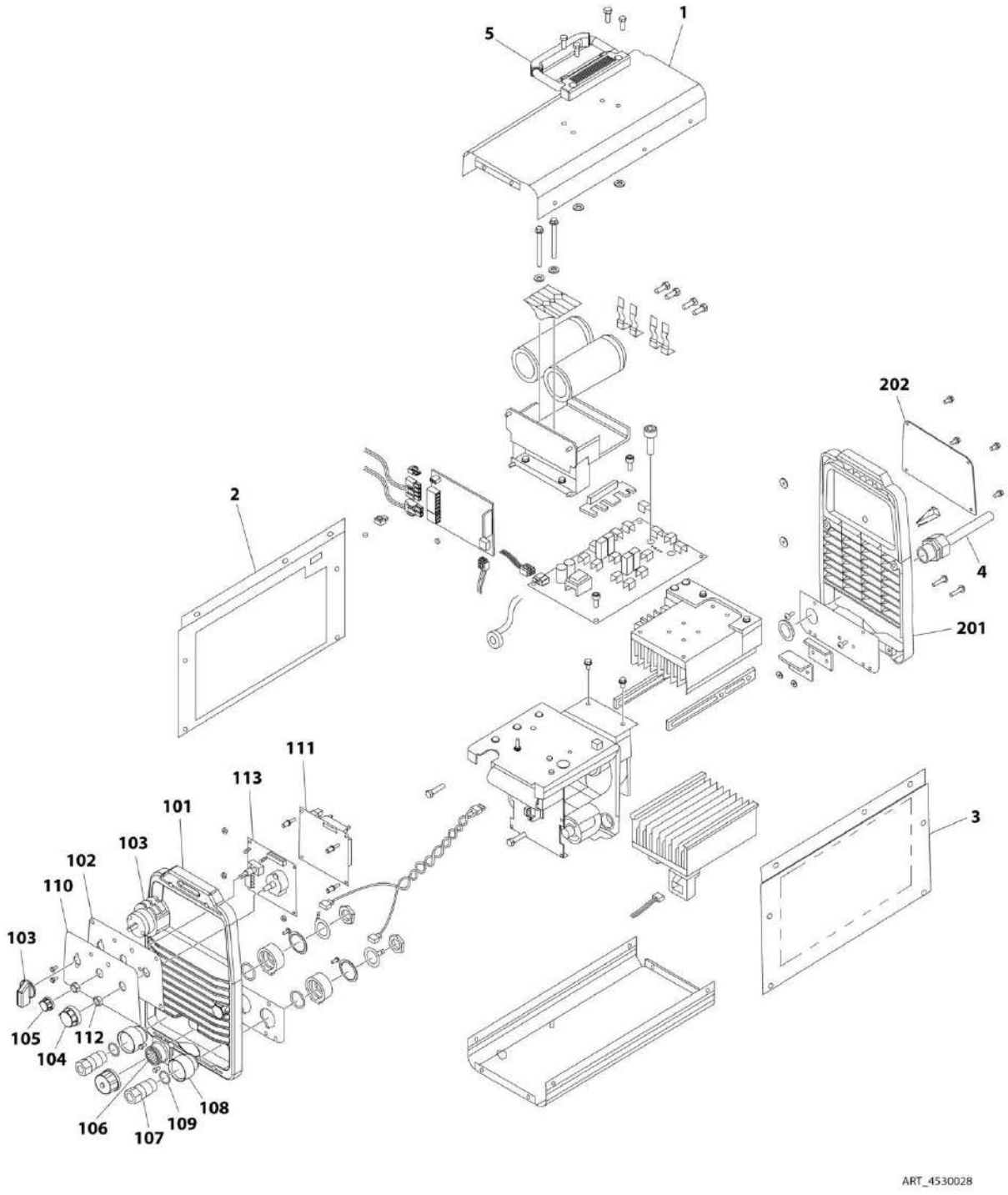

FIGURE 4-16. WELDER ASSEMBLY

ITEM	PART NUMBER	QTY	DESCRIPTION	REV
		Ref	**WELDER ASSEMBLY**	
	4530022	Ref	Miller Model CST 250 **(SN 0300065080 through 0300083532)**	C
	4530028	Ref	**Miller Model CST 280 (SN 0300083533 through 0300123999)**	B
		Ref	**Note: For Other Components, contact your Miller Welder Dealer**	
1		Ref	Cover, Top Options:	
1	7024464	1	Miller Model CST 250 **(SN 0300065080 through 0300083532)**	
1	7027773	1	Miller Model CST 280 **(SN 0300083533 through 0300123999)**	
1	7027774	1	Decal - Static Precautionary Warning	
2		Ref	Panel, LH Side Options:	
2	7024465	1	Miller Model CST 250 **(SN 0300065080 through 0300083532)**	
2	See Note	NSS	Miller Model CST 280 (Note: Part of Item 1. Purchase Item 1) **(SN 0300083533 through 0300123999)**	
3		Ref	Panel, RH Side Options:	
3	7024466	1	Miller Model CST 250 **(SN 0300065080 through 0300083532)**	
3	See Note	NSS	Miller Model CST 280 (Note: Part of Item 1. Purchase Item 1) **(SN 0300083533 through 0300123999)**	
4	7024467	1	Cable, Power	
4	7027775	1	Decal - Electrical Shock Warning (Used on Miller Model CST 280) (Not Shown) **(SN 0300083533 through 0300123999)**	
5		Ref	Handle, Carrying Options:	
5	7024468	1	Miller Model CST 250 **(SN 0300065080 through 0300083532)**	
5	7027776	1	Miller Model CST 280 **(SN 0300083533 through 0300123999)**	
101	7024462	1	Panel, Front	
102	7024463	1	Panel, Console	
103	7024469	1	Switch with Lead	
104	7024470	1	Knob	
105	7024471	1	Knob	
106	7024472	1	Receptacle with Leads and Plugs	
107	7024473	2	Receptacle, Twistlock Female	
108	7024474	2	Insulator	
109	7024475	2	O-Ring	
110		Ref	Nameplate Options:	
110	7024476	1	Miller Model CST 250 **(SN 0300065080 through 0300083532)**	
110	7027777	1	Miller Model CST 280 **(SN 0300083533 through 0300123999)**	
111		Ref	Circuit Card Assembly (Process Control) Options:	
111	7024477	1	Miller Model CST 250 **(SN 0300065080 through 0300083532)**	
111	7027779	1	Miller Model CST 280 **(SN 0300083533 through 0300123999)**	
112	7024478	2	Nut	
113		Ref	Circuit Card Assembly (Operator Interface) Options:	
113	See Note	NSS	Miller Model CST 250 (Note: Not Available for Purchase) **(SN 0300065080 through 0300083532)**	
113	7027778	1	Miller Model CST 280 **(SN 0300083533 through 0300123999)**	
201	7024462	1	Panel, Rear	
202		Ref	Panel, Cover Options:	
202	7024479	1	Miller Model CST 250 **(SN 0300065080 through 0300083532)**	
202	7027780	1	Miller Model CST 280 **(SN 0300083533 through 0300123999)**	

FIGURE 4-17. SKYCUTTER INSTALLATION (SN 0300035080 through 0300119210)

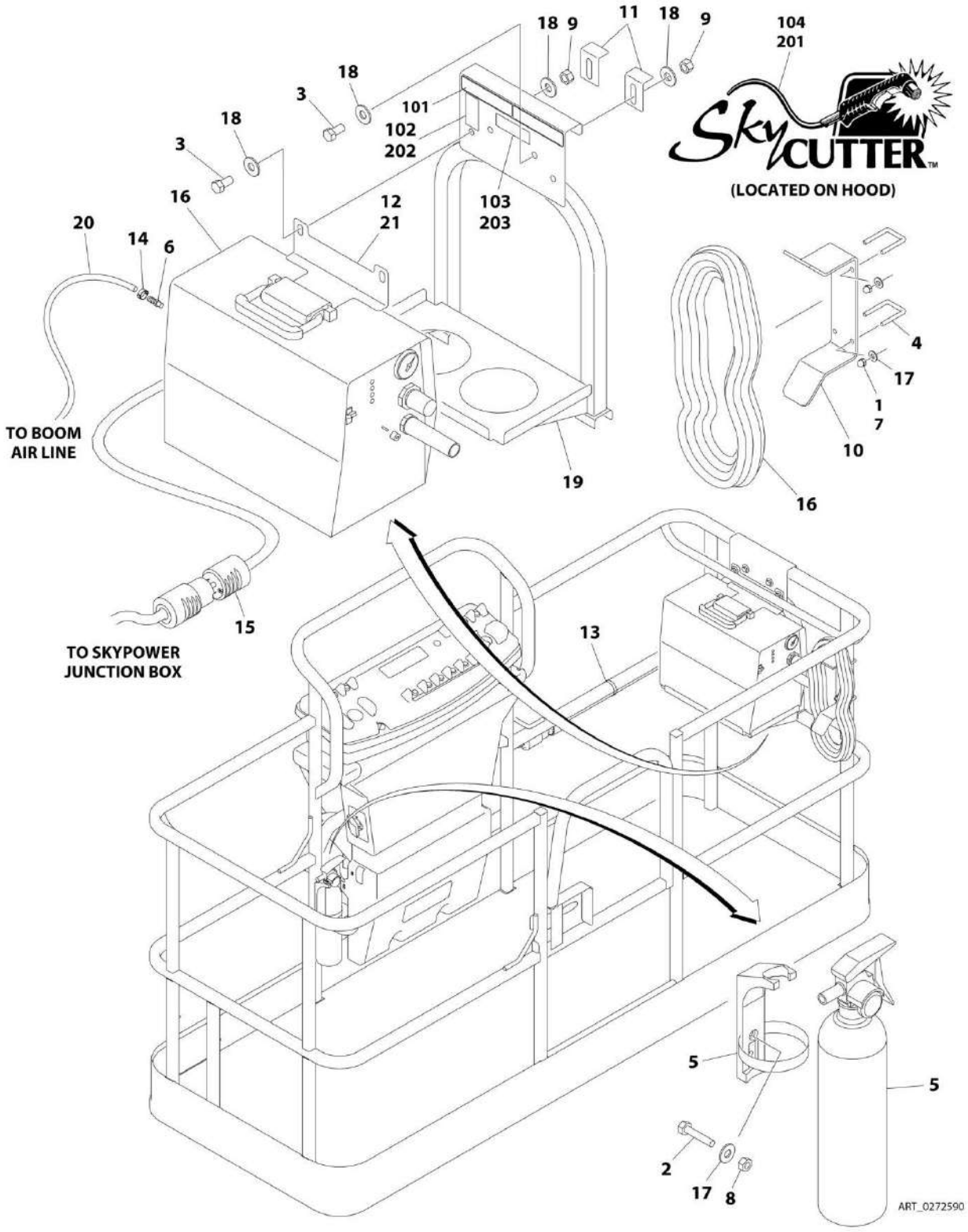

FIGURE 4-17. SKYCUTTER INSTALLATION (SN 0300035080 through 0300119210)

ITEM	PART NUMBER	QTY	DESCRIPTION	REV
		Ref	**SKYCUTTER INSTALLATION (SN 0300035080 through 0300119210)**	
	0272590	Ref	**SkyCutter Installation - 60Hz Power Supply**	D
	0272606	Ref	**SkyCutter Installation - 50Hz Power Supply**	D
		Ref	**Note: When replacing platform on machines with SkyCutter option, new bracket p/n 1001145405 must be purchased to accommodate SkyCutter components**	
1	0100011	AR	Compound, Locking	
2	0641406	2	Bolt 1/4 x 3/4	
3	0641606	4	Bolt 3/8 x 3/4	
4	1320302	2	Clamp	
5	2030010	1	Extinguisher, Fire	
6	2180832	1	Fitting, NPT/Barbed	
7	3300151	4	Nut 1/4	
8	3311405	2	Nut 1/4	
9	3311605	4	Nut 3/8	
10	3573400	1	Bracket, Cable	
11	3573641	2	Plate, Clamp (Use p/n 3577121)	
12	3573643	1	Plate, Top Support	
13	4240099	AR	Tie, Wire	
14	1320177	2	Clamp, Hose	
15	4460971	1	Plug, Twistlock	
16	4530024	1	Plasma Cutter Assembly - 60Hz Power Supply (See PLASMA CUTTER ASSEMBLY for Breakdown)	
16	4530025	1	Plasma Cutter Assembly - 50Hz Power Supply (See PLASMA CUTTER ASSEMBLY for Breakdown)	
17	4751400	6	Washer 1/4	
18	4751600	8	Washer 3/8	
19	4846571	1	Support	
20	2720160	4 ft/1.2m	Hose	
21	4420037	AR	Tape, Insulation	
	0272599	Ref	**SKYCUTTER DECAL INSTALLATION (ANSI, ANSI Export and CSA Specs)**	A
101	1702868	1	Decal - No Hands (60Hz Power Supply Only)	
102	1705305	1	Decal - Weld Lead	
103	1705466	1	Decal - Weight	
104	1705490	2	Decal - SkyCutter	
	0272607	Ref	**SKYCUTTER DECAL INSTALLATION (JAPANESE SPECS)**	A
201	1705490	2	Decal - SkyCutter	
202	1705305	1	Decal - Weld Lead	
203	1705466	1	Decal - Weight	

FIGURE 4-18. SKYCUTTER INSTALLATION (SN 0300119211 through 0300123999)

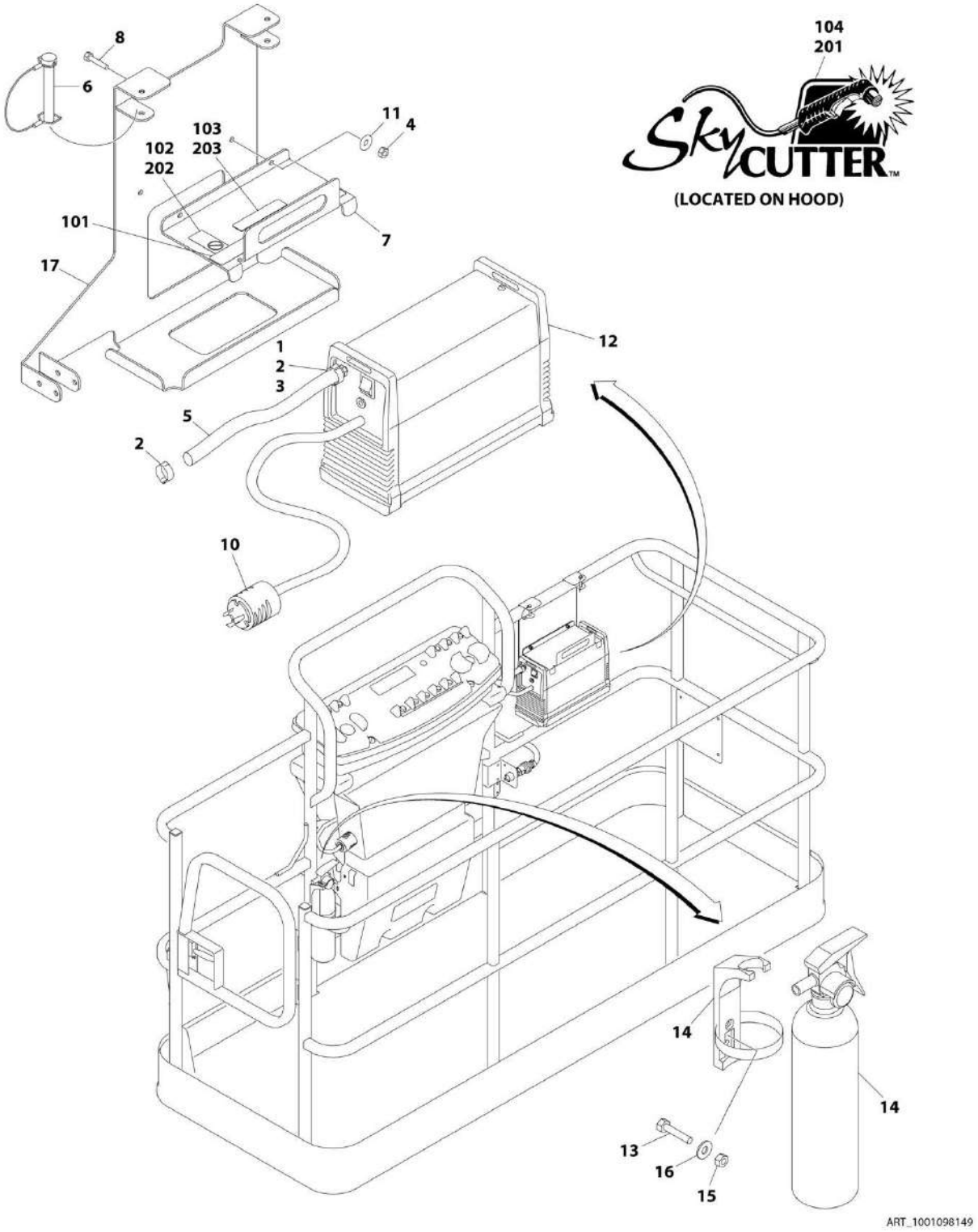

FIGURE 4-18. SKYCUTTER INSTALLATION (SN 0300119211 through 0300123999)

ITEM	PART NUMBER	QTY	DESCRIPTION	REV
	1001098149	Ref	**SKYCUTTER SPEC INSTALLATION (SN 0300119211 through 0300123999)**	D
		Ref	**Note: When replacing platform on machines with SkyCutter option, new bracket p/n 1001145405 must be purchased to accommodate SkyCutter components**	
1	0100020	AR	Sealant	
2	1320177	2	Clamp, Hose	
3	2180832	1	Fitting, NPT/Barbed	
4	3290605	2	Nut M6	
5	2720160	3 ft/0.9m	Hose	
6	3421453	3	Pin	
7	3576799	1	Plate, Hold-Down	
8	4010608	2	Screw M6 x 16	
10	4460971	1	Plug, Twistlock	
11	4811700	2	Washer M6	
12	1001098012	1	Plasma Cutter Assembly (See PLASMA CUTTER ASSEMBLY for Breakdown)	
13	0641406	2	Bolt 1/4 x 3/4	
13	0630518	2	Screw #10 x 3/4	
14	2030010	1	Extinguisher, Fire	
15	3311405	2	Nut 1/4	
15	3311005	2	Nut #10	
16	4751400	2	Washer 1/4	
17	4751000	2	Washer #10	
17	4341301	NLA	Support (Use p/n 1001145405)	
	0272599	Ref	**SKYCUTTER DECAL INSTALLATION (ANSI, ANSI EXPORT AND CSA SPECS)**	A
101	1702868	1	Decal - No Hands	
102	1705305	1	Decal - Weld Lead	
103	1705466	1	Decal - Weight	
104	1705490	2	Decal - SkyCutter	
	0272607	Ref	**SKYCUTTER DECAL INSTALLATION (JAPANESE SPECS)**	A
201	1705490	2	Decal - SkyCutter	
202	1705305	1	Decal - Weld Lead	
203	1705466	1	Decal - Weight	

FIGURE 4-19. PLASMA CUTTER ASSEMBLY

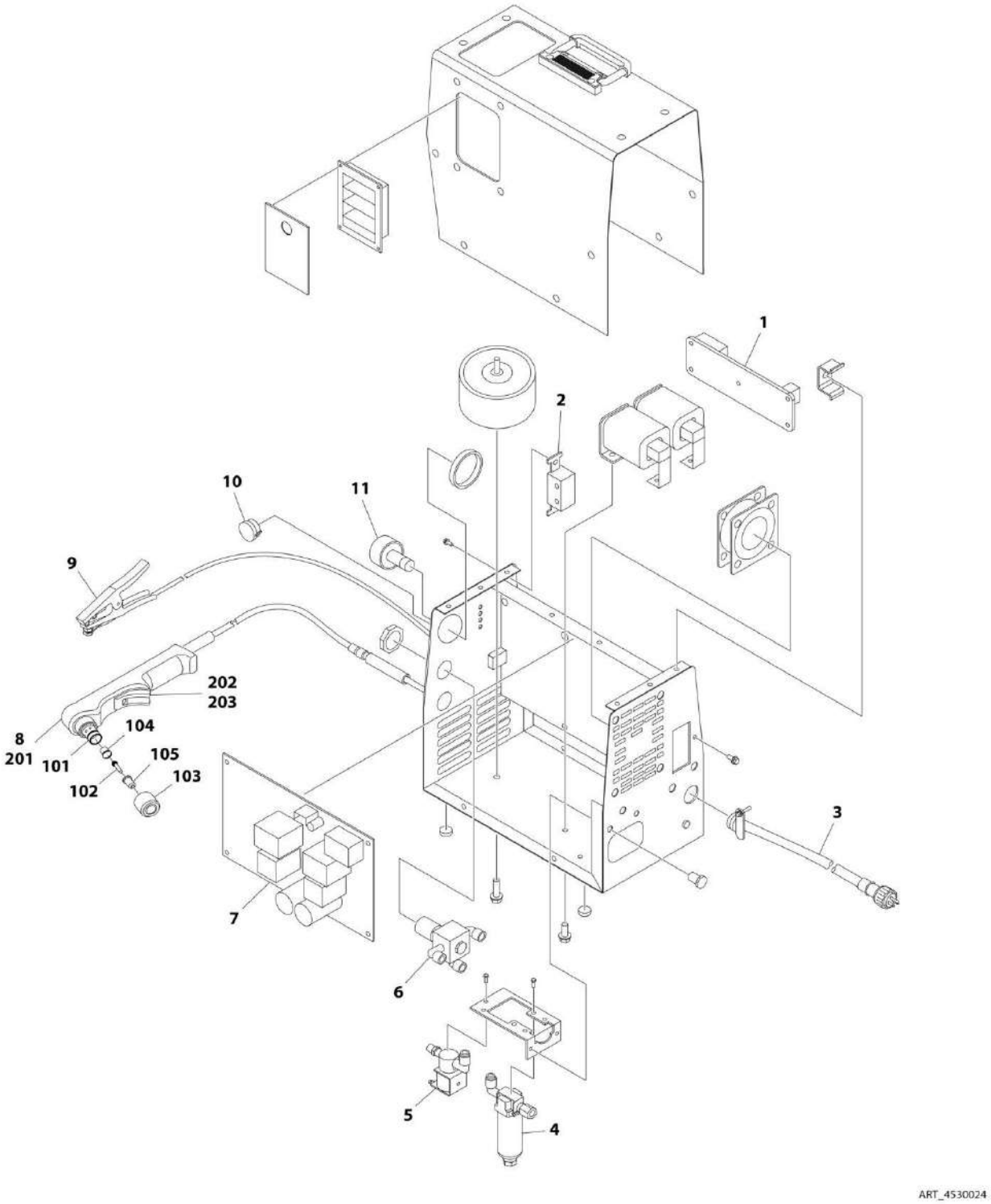

FIGURE 4-19. PLASMA CUTTER ASSEMBLY

ITEM	PART NUMBER	QTY	DESCRIPTION	REV
		Ref	**PLASMA CUTTER ASSEMBLY**	
	4530024	Ref	**Plasma Cutter Assembly - 60Hz Power Supply**	D
	4530025	Ref	**Plasma Cutter Assembly - 50Hz Power Supply**	D
		Ref	Note: For Other Components, contact your Miller Welder Dealer	
1	7024519	1	Circuit Card - 60Hz Power Supply	
1	7024538	1	Circuit Card - 50Hz Power Supply	
2	7024520	1	Switch	
3	7024521	10 ft/3m	Cable, Power - 60Hz Power Supply	
3	7024539	10 ft/3m	Cable, Power - 50Hz Power Supply	
4	7024522	1	Filter, Air	
5	7024523	1	Valve, Air - 60Hz Power Supply	
5	7024540	1	Valve, Air - 50Hz Power Supply	
6	7024524	1	Regulator, Air	
7	7024525	1	Circuit Card - 60Hz Power Supply	
7	7024541	1	Circuit Card - 50Hz Power Supply	
8	7024526	1	Torch Assembly (See Items 101-203 for Breakdown)	
9	7024527	1	Clamp	
10	7024528	1	Knob	
11	7024529	1	Gauge, Air	
	7024526	Ref	**TORCH ASSEMBLY**	
101	7024530	1	O-Ring	
102	7024531	1	Electrode	
103	7024532	1	Cup, Retaining	
104	7024533	1	Swirl Ring	
105	7024534	1	Tip	
201	7024535	1	Handle, Torch	
202	7024536	1	Switch	
203	7024537	1	Trigger	

FIGURE 4-20. PLASMA CUTTER ASSEMBLY

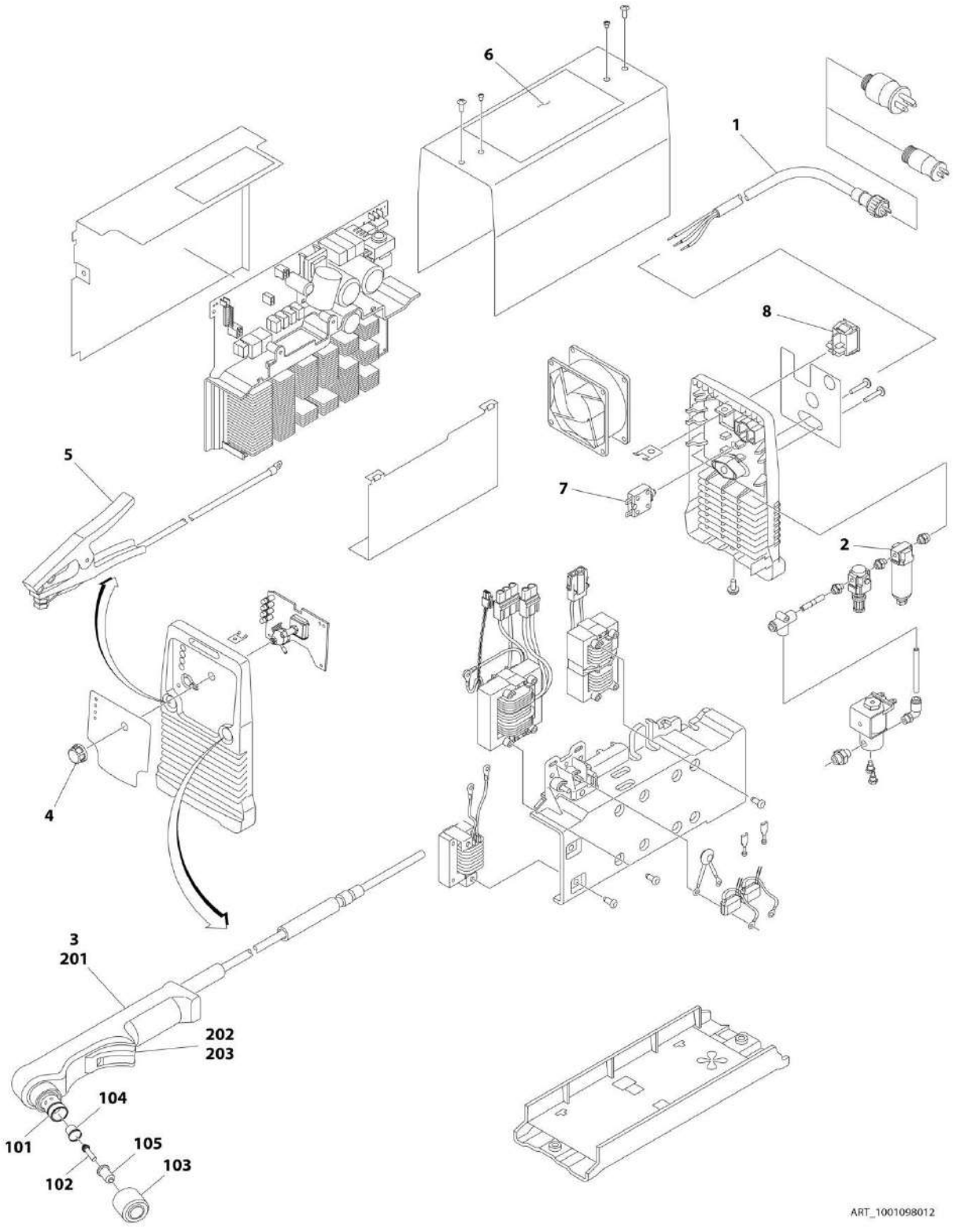

FIGURE 4-20. PLASMA CUTTER ASSEMBLY

ITEM	PART NUMBER	QTY	DESCRIPTION	REV
		Ref	**PLASMA CUTTER ASSEMBLY**	
	1001098012	Ref	**Plasma Cutter Assembly - 50Hz/60Hz Power Supply**	A
		Ref	**Note: For Other Components, contact your Miller Welder Dealer**	
1	70001424	1	Cable, Power	
1	70001425	1	Decal - Voltage Warning	
2	70001427	1	Filter, Regulator	
3	70001428	1	Torch Assembly (See Items 101-203 for Breakdown)	
4	7024471	1	Knob	
5	70001429	1	Clamp with Cable	
6	70001430	1	Decal - Caution	
7	70001431	1	Breaker, Circuit	
8	70001432	1	Switch, Rocker	
	70001428	Ref	**TORCH ASSEMBLY**	
101	7024530	1	O-Ring	
102	7024531	1	Electrode	
103	7024532	1	Cup, Retaining	
104	7024533	1	Swirl Ring	
105	7024534	1	Tip	
201	7024535	1	Handle, Torch	
202	7024536	1	Switch	
203	7024537	1	Trigger	

SECTION 5 - CYLINDER

FIGURE 5-1. USA BUILT MACHINES/AXLE LOCKOUT CYLINDER (SN 0300065080 through 0300107511)

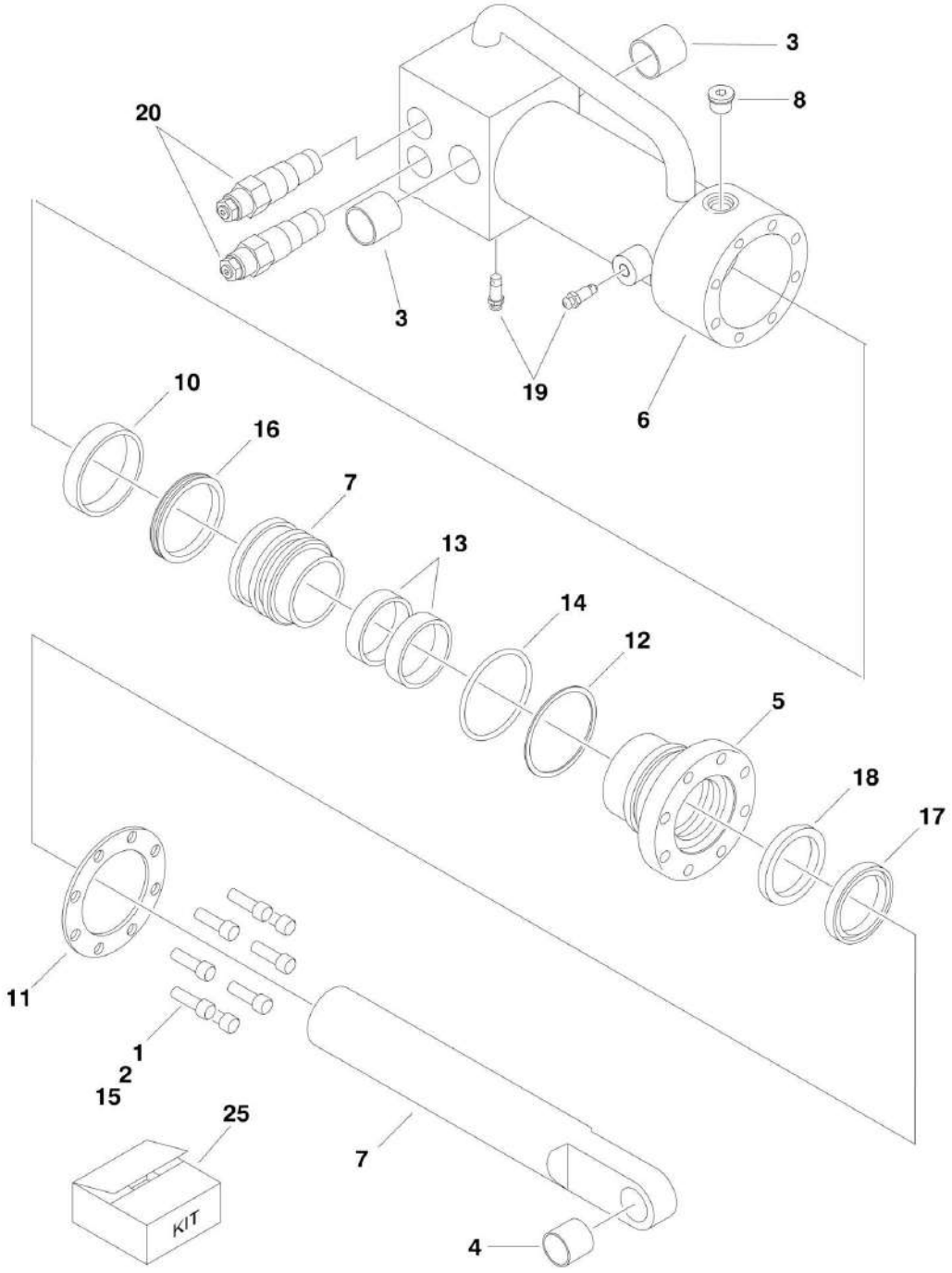

FIGURE 5-1. USA BUILT MACHINES/AXLE LOCKOUT CYLINDER (SN 0300065080 through 0300107511)

ITEM	PART NUMBER	QTY	DESCRIPTION	REV
	1684129	Ref	**AXLE LOCKOUT CYLINDER ASSEMBLY**	C
		Ref	**Manufactured in USA (SN 1st digit is 0)**	
1	0100011	AR	Compound, Locking	
2	0100038	AR	Primer, Locking	
3		Ref	Bushing	
3	0961890	2	Bushing **(SN 0300065080 through 0300069154)**	
3	0962474	2	Bushing **(SN 0300069155 through 0300170511)**	
4		Ref	Bushing	
4	0962395	1	Bushing **(SN 0300065080 through 0300069154)**	
4	0962466	1	Bushing **(SN 0300069155 through 0300123999)**	
5	1683076	1	Head	
6	1683572	1	Barrel Weldment	
7	1684130	1	Rod/Piston	
8	2220885	1	Plug, O-Ring #6	
10	2901548	1	Ring, Wear	
11	3760367	1	Ring, Washer	
12	2901548	1	Ring, Back-up	
13	2901548	2	Ring, Wear	
14	2901548	1	O-Ring	
15	3931516	8	Capscrew, Socket Head 5/16in-18NC x1in	
16	2901548	1	T-Seal	
17	2901548	1	Seal, Wiper	
18	2901548	1	Seal, Rod	
19	4640858	2	Valve, Bleeder	
20	4641162	2	Valve, Counterbalance	
20	2900770	2	Seal Kit - 4641162 Valve (1 Per Assembly)	
25	2901548	1	Seal Kit, Cylinder (Includes Items 10, 12-14 & 16-18)	

FIGURE 5-2. USA BUILT MACHINES/AXLE LOCKOUT CYLINDER (SN 0300107512 through 0300123999)

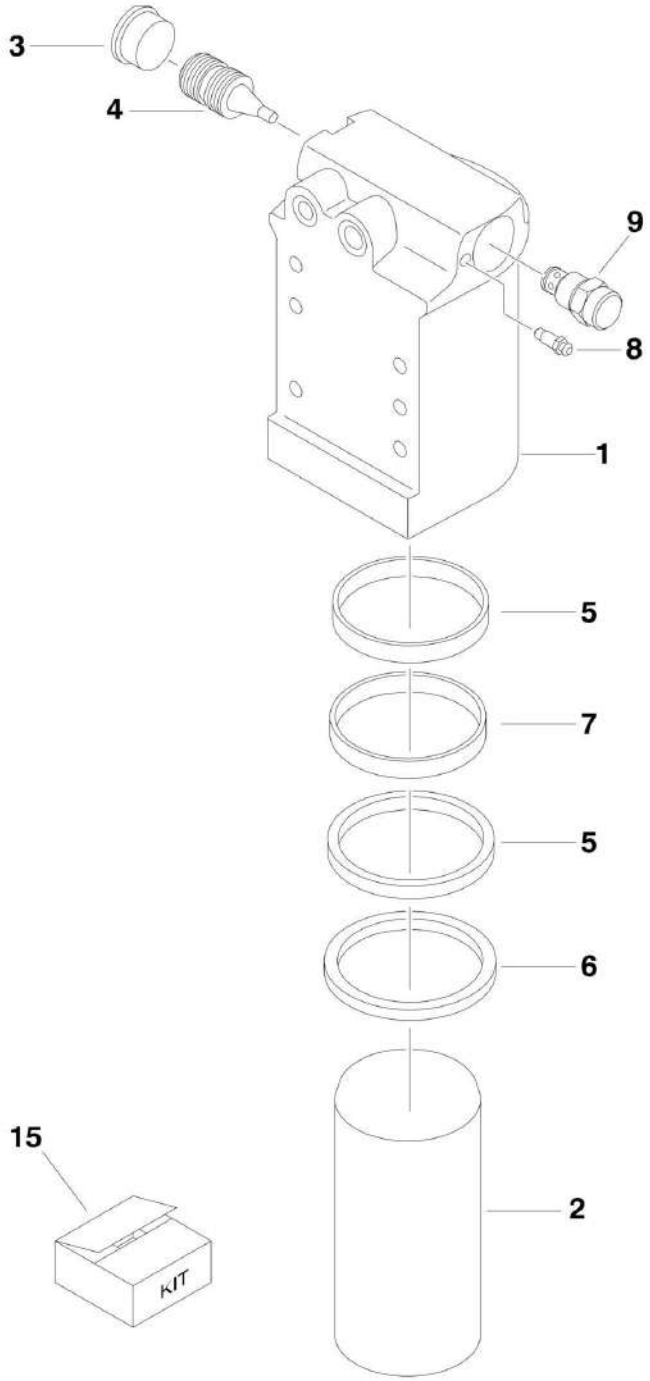

FIGURE 5-2. USA BUILT MACHINES/AXLE LOCKOUT CYLINDER (SN 0300107512 through 0300123999)

ITEM	PART NUMBER	QTY	DESCRIPTION	REV
	1684465	Ref	**AXLE LOCKOUT CYLINDER ASSEMBLY**	B
		Ref	**Manufactured in USA (SN 1st digit is 0)**	
1	0370026	1	Barrel	
2	1684290	1	Rod	
3	2220890	1	Plug	
4	3480288	1	Piston, Pilot	
5	2902266	2	Ring, Wear	
6	2902266	1	Wiper	
7	2902266	1	Seal, Rod	
8	4640858	1	Bleeder	
9	4641390	1	Cartridge, Valve	
9	7017496	1	Seal Kit	
15	2902266	1	Seal Kit, Cylinder (Includes Items 4-6)	

FIGURE 5-3. USA BUILT MACHINES/LEVEL (PLATFORM SLAVE) CYLINDER (450A SERIES II) (ORIGINAL EQUIPMENT) (SN 0300065080 through 0300123999)

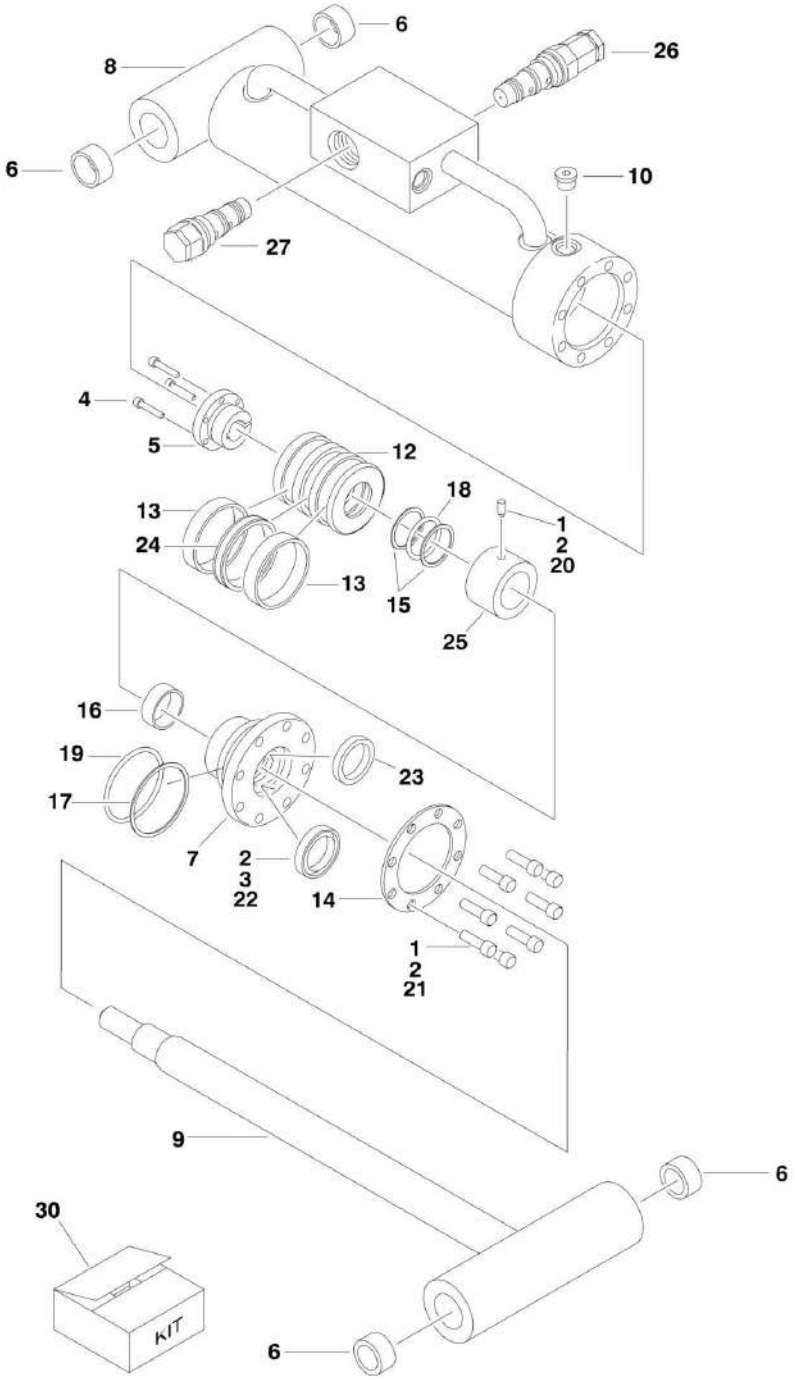

FIGURE 5-3. USA BUILT MACHINES/LEVEL (PLATFORM SLAVE) CYLINDER (450A SERIES II) (ORIGINAL EQUIPMENT) (SN 0300065080 through 0300123999)

ITEM	PART NUMBER	QTY	DESCRIPTION	REV
		Ref	**Note: Original Equipment Cylinder may have been replaced with Service Replacement Cylinder. Identify p/n stamped on cylinder before ordering parts.**	
		Ref	**Manufactured in USA (SN 1st digit is 0)**	
	1684165	Ref	**LEVEL (PLATFORM SLAVE) CYLINDER ASSEMBLY (450A SERIES II) (ORIGINAL EQUIPMENT)**	A
1	0100011	AR	Compound, Locking	
2	0100038	AR	Primer, Locking	
3	0100063	AR	Loctite RC 609	
4	0630534	3	Capscrew #10-24NC x 1in	
5	0962185	1	Bushing, Tapered	
6	0961947	4	Bushing, Garmax	
7	1683050	1	Head	
8	1684166	1	Barrel Weldment	
9	1684167	1	Rod Weldment	
10	2220885	1	Plug, O-Ring	
12	3480232	1	Piston	
13	2901549	2	Ring, Wear	
14	3760367	1	Ring, Washer	
15	2901549	2	Ring, Back-up	
16	2901549	1	Ring, Wear	
17	2901549	1	Ring, Back-up	
18	2901549	1	O-Ring	
19	2901549	1	O-Ring	
20	3900139	1	Setscrew 1/4in-20NC x 1/2in	
21	3931516	8	Capscrew 5/16in-18NC x 1in	
22	2901549	1	Wiper	
23	2901549	1	Seal	
24	2901549	1	T-Seal	
25	4568068	1	Tube, Spacer	
26	4640932	1	Cartridge, Valve (Counterbalance Vented)	
26	7011112	1	Seal Kit - 4640932 Valve	
27	4641086	1	Cartridge, Valve (Counterbalance Non-Vented)	
27	2900792	1	Seal Kit - 4641086 Valve	
30	2901549	1	Seal Kit, Cylinder (Includes Items 13, 15-19 & 22-24)	

FIGURE 5-4. USA BUILT MACHINES/LEVEL (PLATFORM SLAVE) CYLINDER ASSEMBLY (450A SERIES II) (SERVICE REPLACEMENT) (SN 0300065080 through 0300123999)

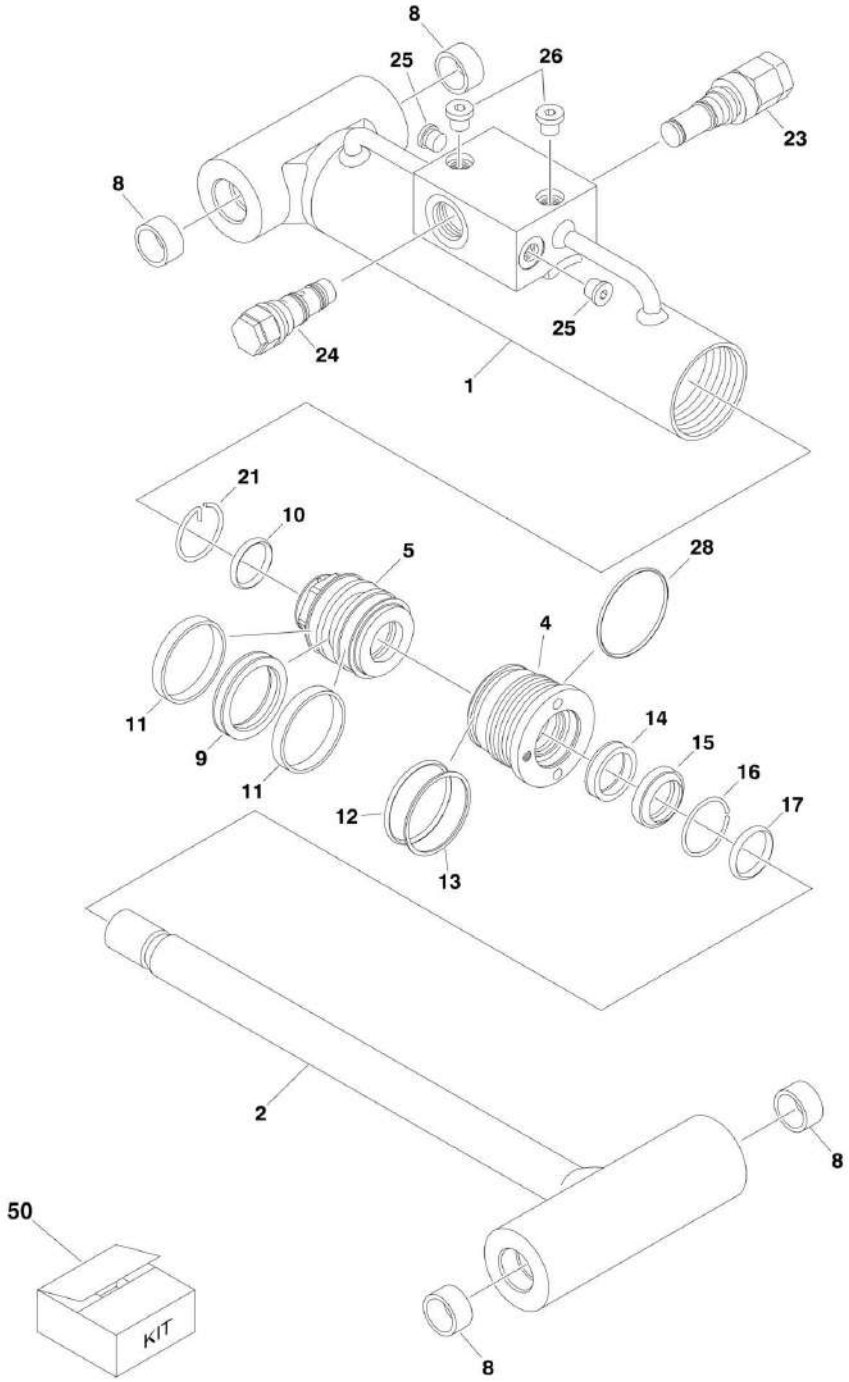

FIGURE 5-4. USA BUILT MACHINES/LEVEL (PLATFORM SLAVE) CYLINDER ASSEMBLY (450A SERIES II) (SERVICE REPLACEMENT) (SN 0300065080 through 0300123999)

ITEM	PART NUMBER	QTY	DESCRIPTION	REV
		Ref	**Note: Original Equipment Cylinder may have been replaced with Service Replacement Cylinder. Identify p/n stamped on cylinder before ordering parts.**	
		Ref	**Manufactured in USA (SN 1st digit is 0)**	
	1001140274	Ref	**LEVEL (PLATFORM SLAVE) CYLINDER ASSEMBLY (450A SERIES II) (SERVICE REPLACEMENT)**	A
1	70003812	1	Barrel	
2	70003813	1	Rod	
4	70003809	1	Head	
5	70003810	1	Piston	
8	0961947	4	Bushing	
9	70003814	1	Seal	
10	70003814	1	O-Ring	
11	70003814	2	Ring, Wear	
12	70003814	1	O-Ring	
13	70003814	1	Ring, Back-up	
14	70003814	1	Seal	
15	70003814	1	Wiper	
16	70002217	1	Ring, Retaining	
17	7026084	1	O-Ring	
21	70002216	1	Retainer	
23	4640932	1	Cartridge, Counterbalance Valve	
23	7011112	1	Seal Kit - 4640932 Valve	
24	4641086	1	Cartridge, Counterbalance Valve	
24	2900792	1	Seal Kit - 4641086 Valve	
25	7024844	2	Plug	
26	See Note	2	Plug (Note: Not available for purchase)	
28	70003814	1	O-Ring	
50	70003814	1	Seal Kit (Includes Items 9-15 & 28)	

FIGURE 5-5. USA BUILT MACHINES/LEVEL (PLATFORM) CYLINDER (450AJ SERIES II) (ORIGINAL EQUIPMENT) (SN 0300065080 through 0300123999)

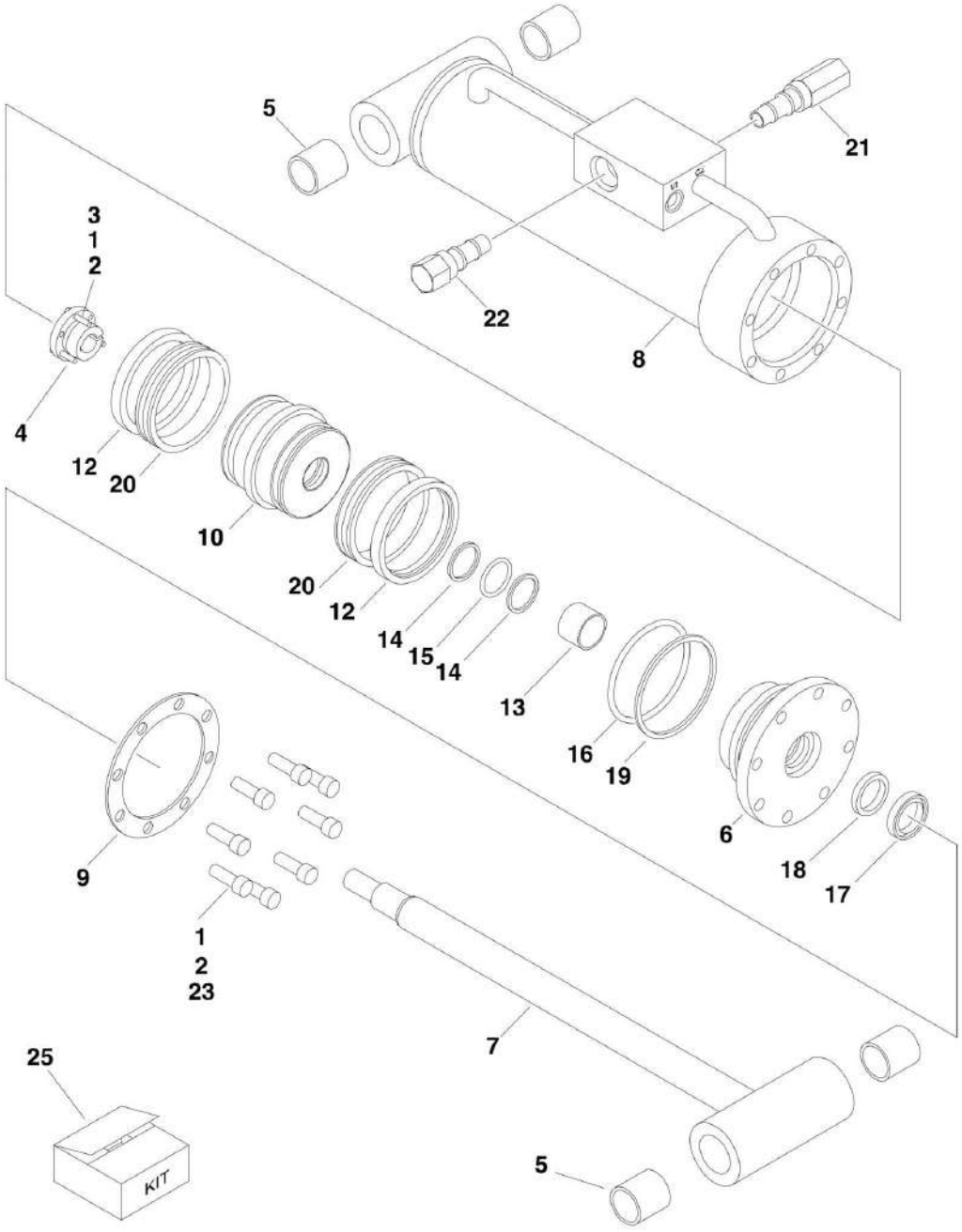

FIGURE 5-5. USA BUILT MACHINES/LEVEL (PLATFORM) CYLINDER (450AJ SERIES II) (ORIGINAL EQUIPMENT) (SN 0300065080 through 0300123999)

ITEM	PART NUMBER	QTY	DESCRIPTION	REV
		Ref	**Note: Original Equipment Cylinder may have been replaced with Service Replacement Cylinder. Identify p/n stamped on cylinder before ordering parts.**	
		Ref	**Manufactured in USA (SN 1st digit is 0)**	
	1683760	Ref	**LEVEL (PLATFORM SLAVE) CYLINDER ASSEMBLY (450AJ SERIES II) (ORIGINAL EQUIPMENT)**	D
1	0100011	AR	Compound, Locking	
2	0100038	AR	Primer, Locking #7471	
3	0630534	3	Bolt, Socket Head #10-24NC x 1in	
4	0962185	1	Tapered Bushing	
5	0961951	4	Bushing, Garmax	
6	1683052	1	Head	
7	1683759	1	Rod	
8	1683761	1	Barrel	
9	3760368	1	Washer, Ring	
10	3480247	1	Piston	
12	2901776	2	Ring, Lock	
13	2901776	1	Ring, Wear	
14	2901776	2	Ring, Back-Up	
15	2901776	1	O-Ring	
16	2901776	1	O-Ring	
17	2901776	1	Wiper	
18	2901776	1	Seal	
19	2901776	1	Ring, Back-Up	
20	2901776	2	Seal	
21	4640932	1	Cartridge, Valve (Counterbalance Vented)	
21	7011112	1	Seal Kit - 4640932 Valve	
22	4641086	1	Cartridge, Valve (Counterbalance Non-Vented)	
22	2900792	1	Seal Kit - 4641086 Valve	
23	3931516	8	Bolt, Socket Head 5/16in-18NC x 1in	
25	2901776	1	Seal Kit, Cylinder (Includes Items 12-20)	

FIGURE 5-6. USA BUILT MACHINES/LEVEL (PLATFORM) CYLINDER (450AJ SERIES II) (SERVICE REPLACEMENT) (SN 0300065080 through 0300123999)

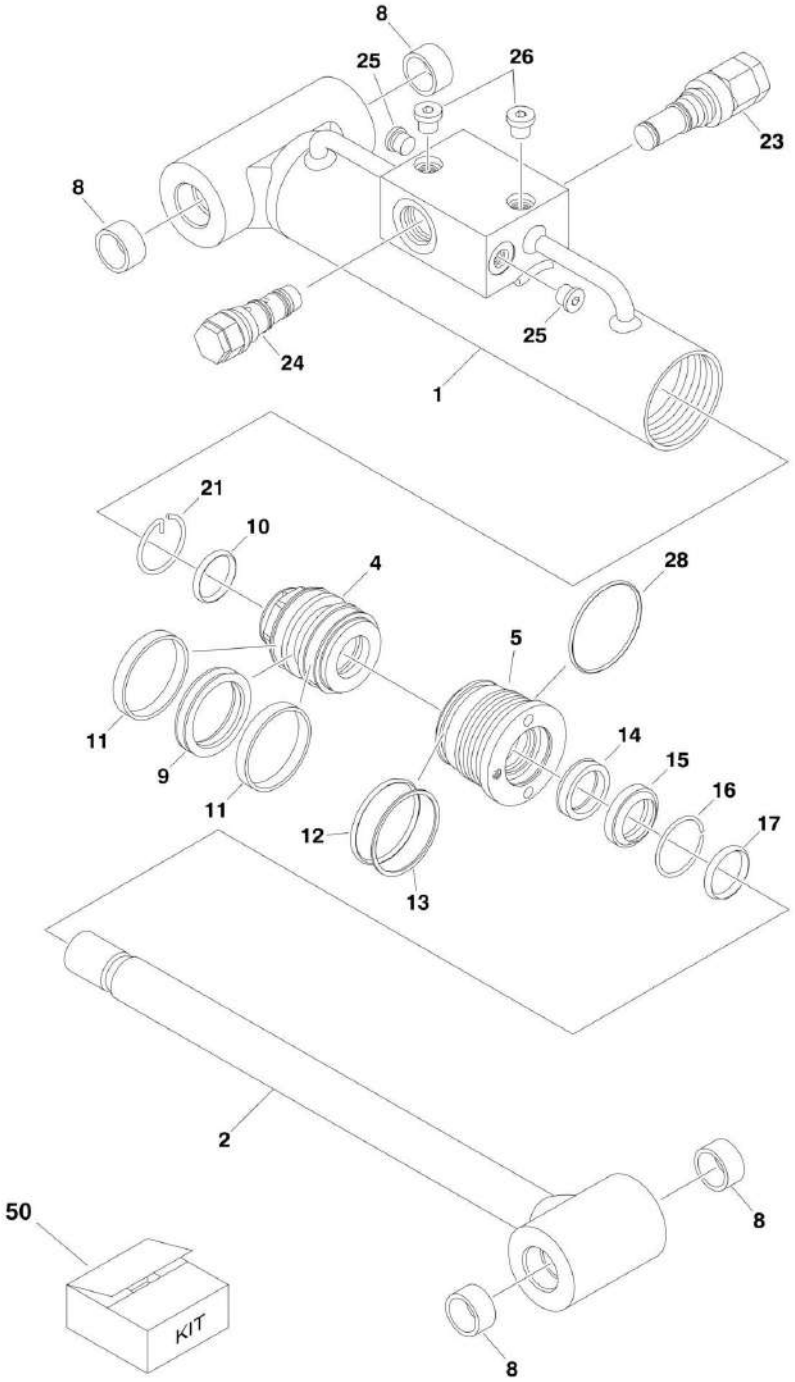

FIGURE 5-6. USA BUILT MACHINES/LEVEL (PLATFORM) CYLINDER (450AJ SERIES II) (SERVICE REPLACEMENT) (SN 0300065080 through 0300123999)

ITEM	PART NUMBER	QTY	DESCRIPTION	REV
		Ref	**Note: Original Equipment component may have been replaced with Service Replacement component. Identify p/n stamped on cylinder before ordering parts.**	
		Ref	**Manufactured in USA (SN 1st digit is 0)**	
	1001140279	Ref	**PLATFORM LEVEL CYLINDER ASSEMBLY (450AJ SERIES II) (SERVICE REPLACEMENT)**	A
1	70003846	1	Barrel	
2	70003847	1	Rod	
4	70003819	1	Piston	
5	7026082	1	Head	
8	0961951	4	Bushing	
9	70003845	1	Seal	
10	70003845	1	O-Ring	
11	70003845	2	Ring, Wear	
12	70003845	1	O-Ring	
13	70003845	1	Ring, Back-up	
14	70003845	1	Seal	
15	70003845	1	Wiper	
16	70002217	1	Ring, Retaining	
17	7026084	1	O-Ring	
21	70002216	1	Retainer	
23	4640932	1	Cartridge, Counterbalance Valve	
23	7011112	1	Seal Kit - 4640932 Valve	
24	4641086	1	Cartridge, Counterbalance Valve	
24	2900792	1	Seal Kit - 4641086 Valve	
25	7024844	2	Plug	
26	See Note	2	Plug (Note: Not available for purchase)	
28	70003845	1	O-Ring	
50	70003845	1	Seal Kit (Includes Items 9-15 & 28)	

FIGURE 5-7. USA BUILT MACHINES/LIFT (JIB) CYLINDER (450AJ SERIES II ONLY) (ORIGINAL EQUIPMENT) (SN 0300065080 through 0300123999)

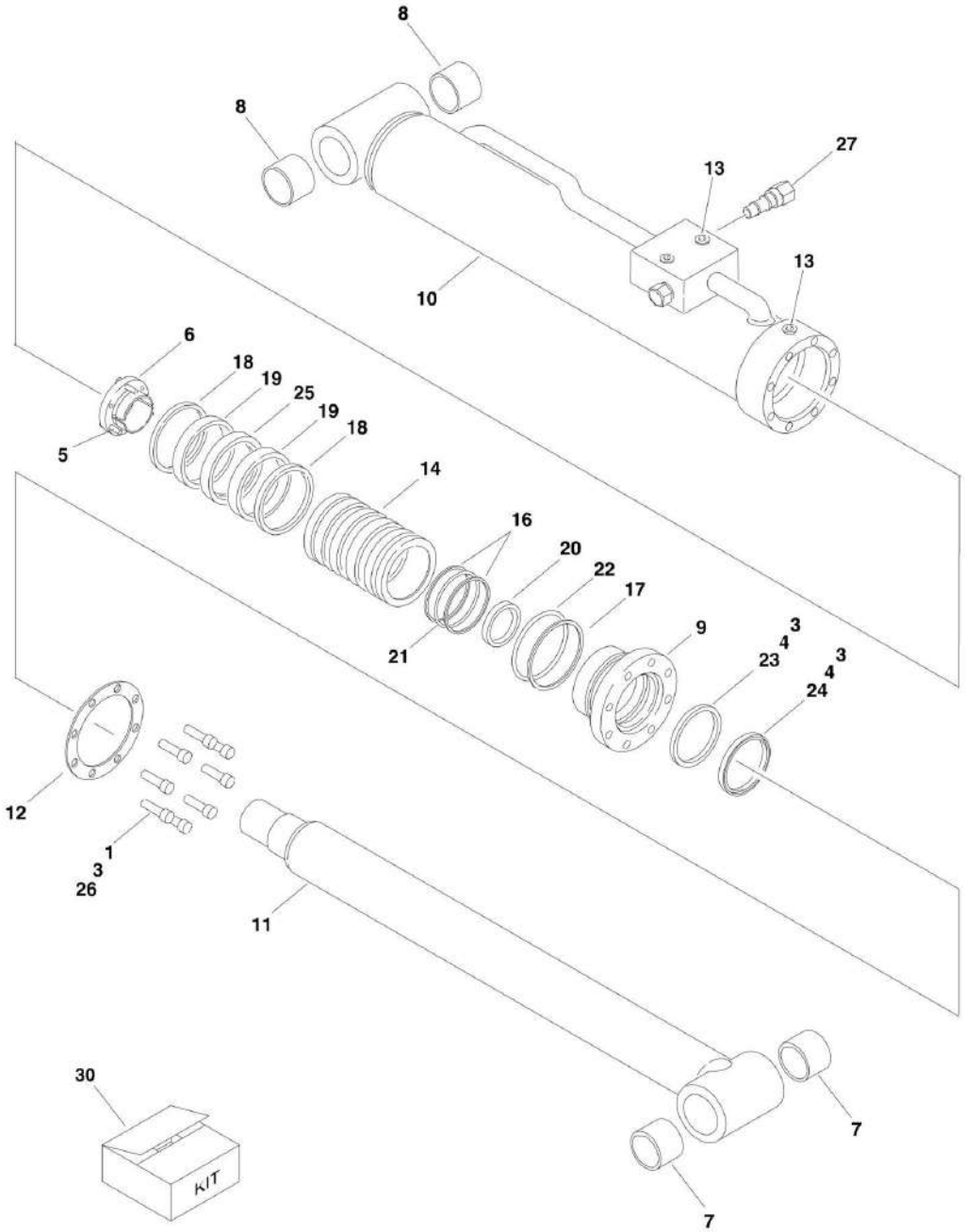

FIGURE 5-7. USA BUILT MACHINES/LIFT (JIB) CYLINDER (450AJ SERIES II ONLY) (ORIGINAL EQUIPMENT) (SN 0300065080 through 0300123999)

ITEM	PART NUMBER	QTY	DESCRIPTION	REV
		Ref	**Note: Original Equipment Cylinder may have been replaced with Service Replacement Cylinder. Identify p/n stamped on cylinder before ordering parts.**	
		Ref	**Manufactured in USA (SN 1st digit is 0)**	
	1683959	Ref	**JIB LIFT CYLINDER ASSEMBLY (450AJ SERIES II ONLY) (ORIGINAL EQUIPMENT)**	B
1	0100011	AR	Compound, Locking	
3	0100038	AR	Primer, Locking	
4	0100063	AR	Loctite #RC609	
5	0630534	3	Bolt #10-24NC x 1in	
6	0961893	1	Bushing, Tapered	
7	0961947	2	Bushing	
8	0961951	2	Bushing	
9	1683051	1	Head	
10	1683960	1	Barrel Weldment	
11	1683961	1	Rod Weldment	
12	3760367	1	Washer, Ring	
13	2220885	3	Plug, O-Ring	
14	3480249	1	Piston	
16	2901810	2	Ring, Back-up	
17	2901810	1	Ring, Back-up	
18	2901810	2	Seal	
19	2901810	2	Ring, Wear	
20	2901810	1	Ring, Wear	
21	2901810	1	O-Ring	
22	2901810	1	O-Ring	
23	2901810	1	Seal	
24	2901810	1	Wiper	
25	2901810	1	T-Seal	
26	3931516	8	Bolt, Socket Head 5/16in-18NC x 2in	
27	4640509	2	Cartridge, Valve (Counterbalance Non-Vented)	
27	2900792	2	Seal Kit - 4640509 Valve	
30	2901810	1	Seal Kit, Cylinder (Includes Items 16-25)	

FIGURE 5-8. USA BUILT MACHINES/LIFT (JIB) CYLINDER (450AJ SERIES II ONLY) (SERVICE REPLACEMENT) (SN 0300065080 through 0300123999)

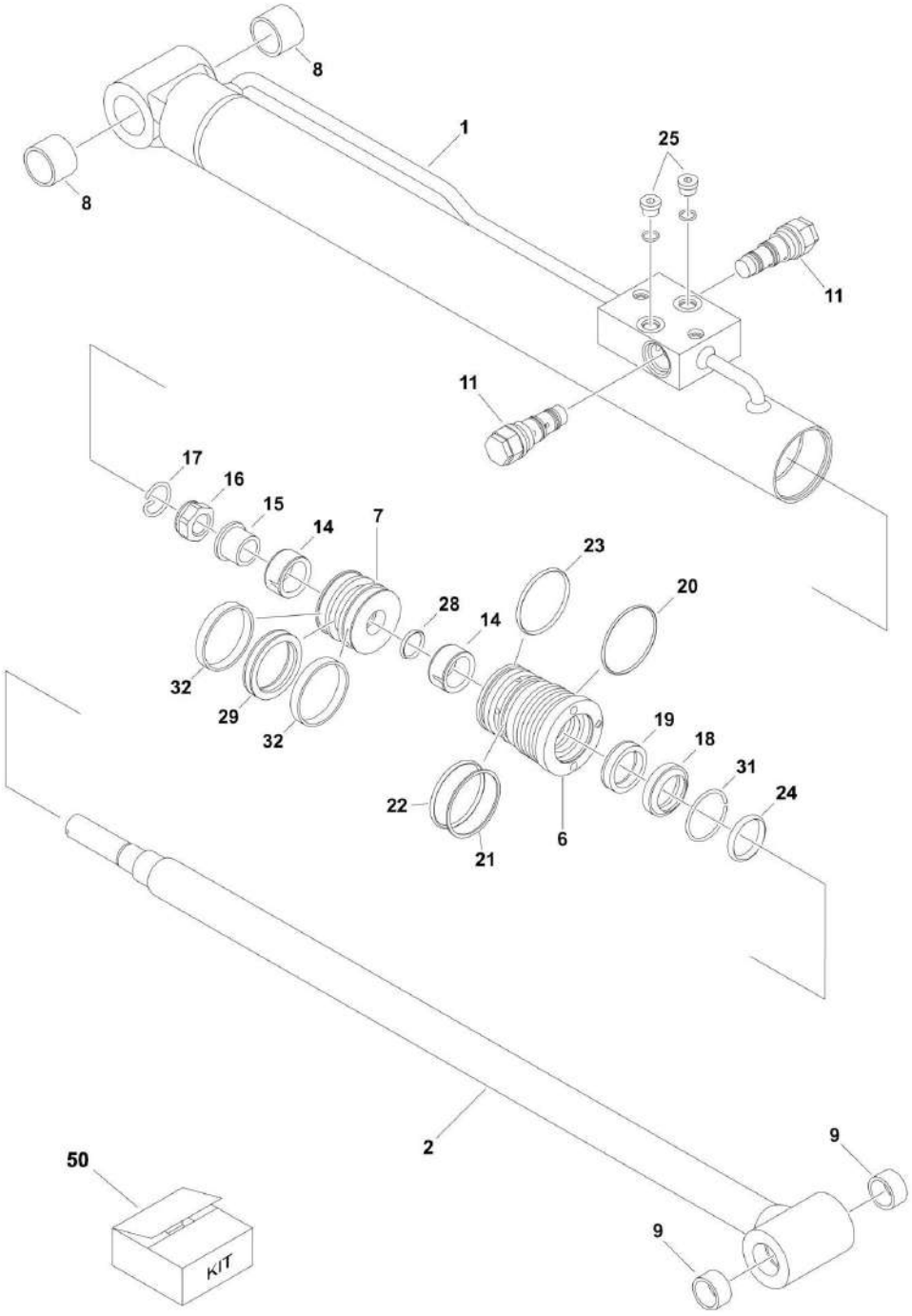

FIGURE 5-8. USA BUILT MACHINES/LIFT (JIB) CYLINDER (450AJ SERIES II ONLY) (SERVICE REPLACEMENT) (SN 0300065080 through 0300123999)

ITEM	PART NUMBER	QTY	DESCRIPTION	REV
		Ref	**Note: Original Equipment Cylinder may have been replaced with Service Replacement Cylinder. Identify p/n stamped on cylinder before ordering parts.**	
		Ref	**Manufactured in USA (SN 1st digit is 0)**	
	1001140282	Ref	**LIFT (JIB) CYLINDER ASSEMBLY (450AJ SERIES II ONLY) (SERVICE REPLACEMENT)**	A
1	70003834	1	Barrel	
2	70003835	1	Rod	
6	7026088	1	Head	
7	70003833	1	Piston	
8	0961951	2	Bushing	
9	0961947	2	Bushing	
11	464509	2	Cartridge, Counterbalance Valve	
11	2900792	2	Seal Kit - 464509 Valve	
14	7026090	2	Bushing	
15	7026091	1	Sleeve	
16	7026092	1	Nut	
17	70002223	1	Retainer	
18	70003836	1	Wiper	
19	70003836	1	Seal	
20	70003836	1	O-Ring	
21	70003836	1	Ring, Backup	
22	70003836	1	O-Ring	
23	70003836	1	O-Ring	
24	7026068	1	O-Ring	
25	7024844	2	Plug	
28	70003836	1	O-Ring	
29	70003836	1	Seal	
31	70002220	1	Ring, Retaining	
32	70003836	2	Ring, Wear	
50	70003836	1	Seal Kit - 1001140282 Cylinder (Includes Items 18-23, 28, 29 & 32)	

FIGURE 5-9. USA BUILT MACHINES/LIFT (MAIN BOOM) CYLINDER (SN 0300065080 through 0300123999)

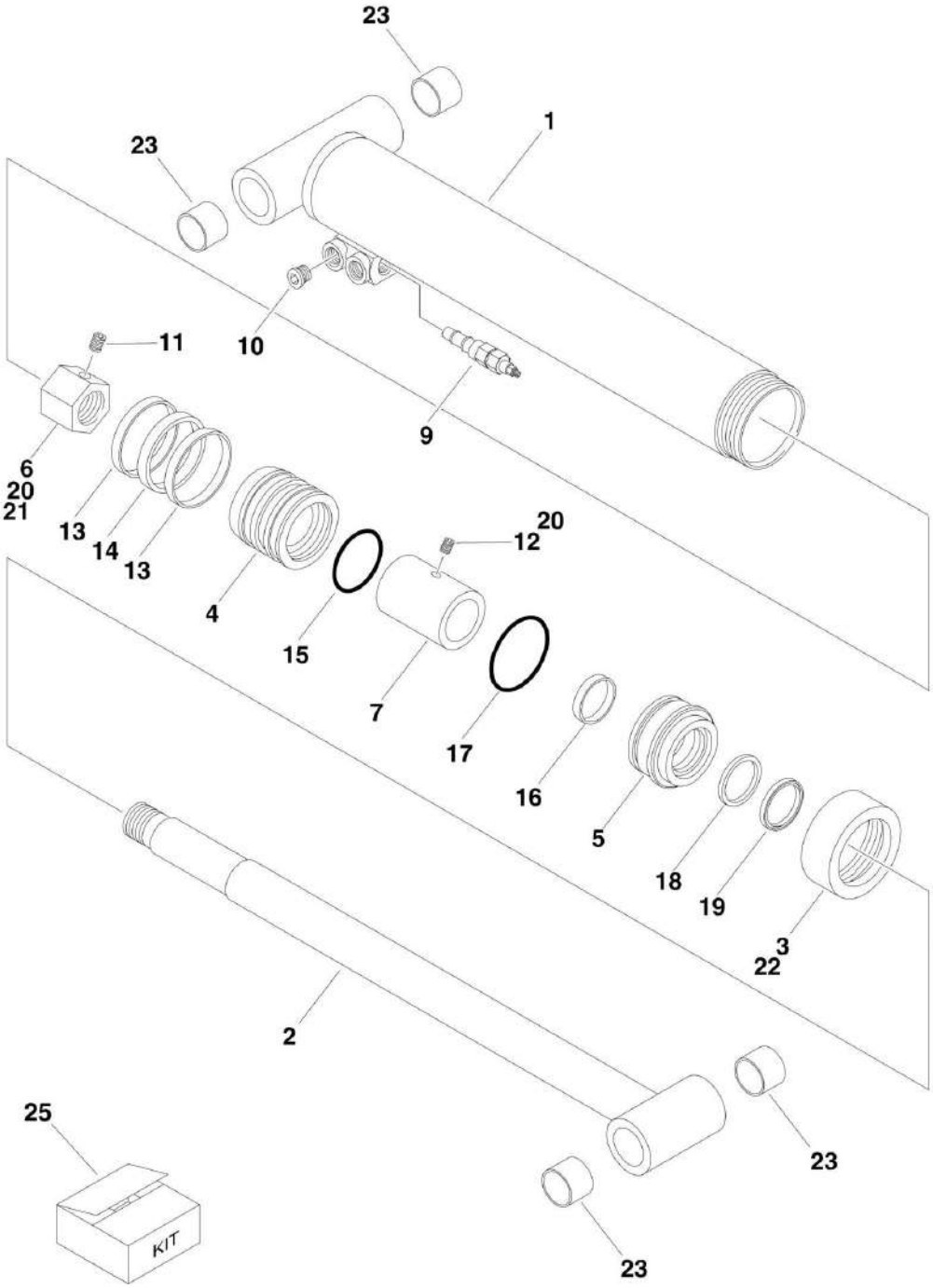

FIGURE 5-9. USA BUILT MACHINES/LIFT (MAIN BOOM) CYLINDER (SN 0300065080 through 0300123999)

ITEM	PART NUMBER	QTY	DESCRIPTION	REV
		Ref	**MAIN LIFT CYLINDER ASSEMBLY**	
	1684155	Ref	**Main Lift Cylinder Assembly (450A Series II Manufactured in USA) (SN 1st digit is 0)**	1-B
	1684154	Ref	**Main Lift Cylinder Assembly (450AJ Series II Manufactured in USA) (SN 1st digit is 0)**	1-B
1		Ref	Barrel Weldment Options:	
1	1684060	1	Barrel Weldment (1684155 Cylinder)	
1	1683946	1	Barrel Weldment (1684154 Cylinder)	
2		Ref	Rod Weldment Options:	
2	1684059	1	Rod Weldment (1684155 Cylinder)	
2	1683947	1	Rod Weldment (1684154 Cylinder)	
3	1120108	1	Cap, End	
4	3480240	1	Piston	
5	1683504	1	Head	
6		Ref	Nut, Hex Options:	
6	3300315	1	Nut, Hex (1684155 Cylinder)	
6	3300279	1	Nut, Hex (1684154 Cylinder)	
7		Ref	Spacer, Tube Options:	
7	4567177	1	Spacer, Tube (1684155 Cylinder)	
7	4567908	1	Spacer, Tube (1684154 Cylinder)	
9	4640936	1	Cartridge, Valve	
9	2900770	1	Seal Kit - 4640936 Valve	
10	2220885	1	Plug, O-Ring	
11	3900170	1	Setscrew	
12		Ref	Setscrew Options:	
12	3951402	1	Setscrew (1684155 Cylinder)	
12	3900142	1	Setscrew (1684154 Cylinder)	
13	2902074	2	Ring, Wear	
14	2902074	1	Seal	
15	2902074	1	O-Ring	
16	2902074	1	Ring, Wear	
17	2902074	1	O-Ring	
18	2902074	1	Seal	
19	2902074	1	Wiper	
20	0100011	AR	Compound, Locking	
21	0100038	AR	Primer, Locking	
22	0100035	AR	Compound, Locking	
23	0961950	4	Bushing	
25	2902074	1	Seal Kit, Cylinder (Includes Items 13-19)	

FIGURE 5-10. USA BUILT MACHINES/LIFT (TOWER BOOM) CYLINDER (SN 0300065080 through 0300123999)

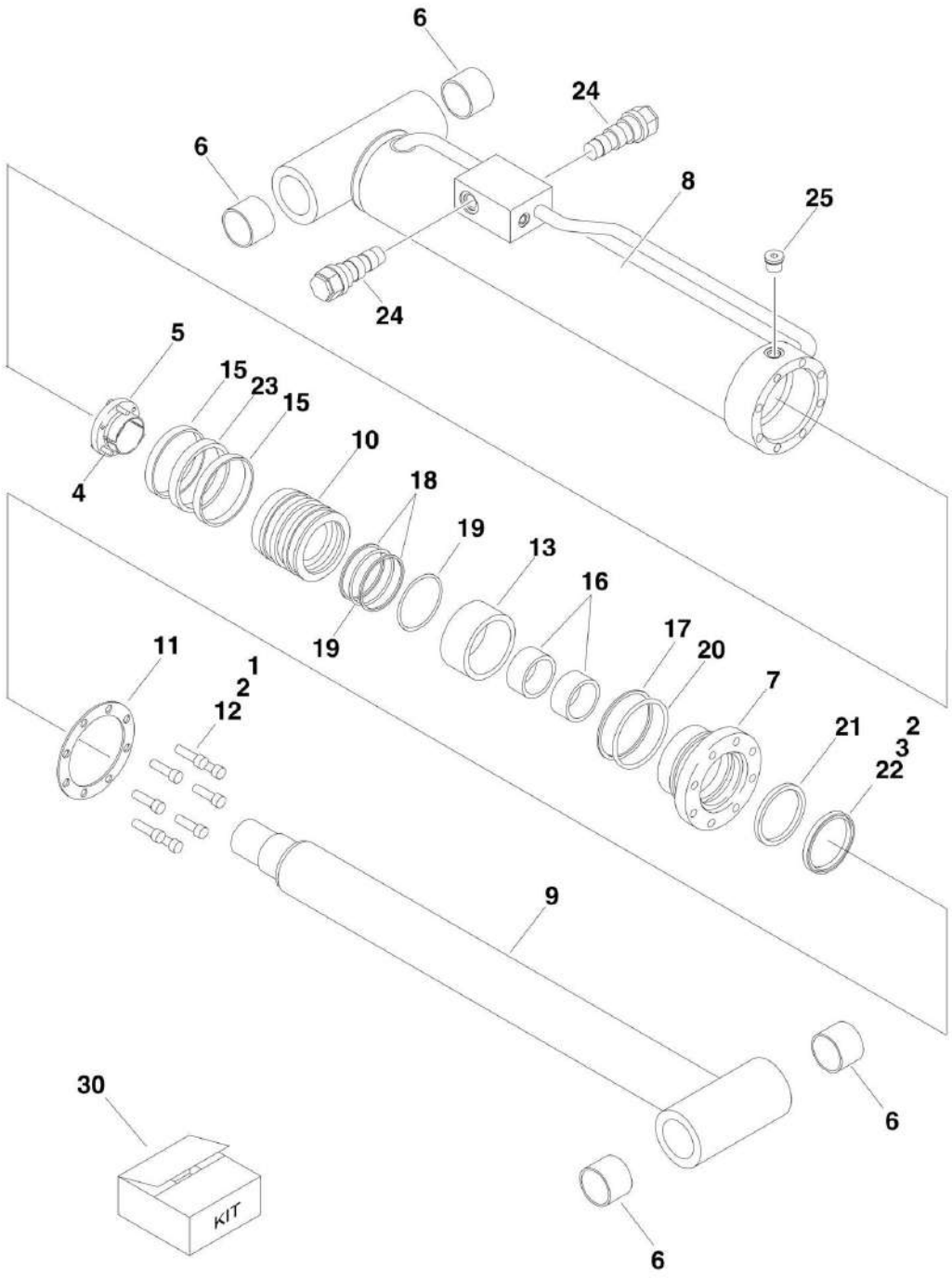

FIGURE 5-10. USA BUILT MACHINES/LIFT (TOWER BOOM) CYLINDER (SN 0300065080 through 0300123999)

ITEM	PART NUMBER	QTY	DESCRIPTION	REV
		Ref	**Manufactured in USA (SN 1st digit is 0)**	
	1684070	Ref	**TOWER LIFT CYLINDER ASSEMBLY**	E
1	0100011	AR	Compound, Locking	
2	0100038	AR	Primer, Locking	
3	0100063	AR	Loctite RC609 **(SN 0300065080 through 0300087393)**	
4	0630535	3	Capscrew 1/4in-20NC x 1-1/8in	
5	0961897	1	Bushing, Tapered	
6	0961950	4	Bushing	
7	1683063	1	Head	
8	1684067	1	Barrel Weldment	
9	1684069	1	Rod Weldment	
10	3480253	1	Piston	
11	3760371	1	Washer, Ring	
12	3931824	8	Bolt, Socket Head 1/2in-13NC x 1-1/2in	
13		Ref	Spacer, Tube Options:	
13	4567949	1	Spacer, Tube **(SN 0300065080 through 0300078894)**	
13	4100099	1	Spacer, Tube **(SN 0300078895 through 0300123999)**	
15	2902044	2	Ring, Wear	
16	2902044	2	Ring, Wear	
17	2902044	1	Ring, Back-up	
18	2902044	2	Ring, Back-up	
19	2902044	Ref	O-Ring Options:	
19	2902044	1	O-Ring **(SN 0300065080 through 0300078894)**	
19	2902044	2	O-Ring **(SN 0300078895 through 0300123999)**	
20	2902044	1	O-Ring	
21	2902044	1	Seal	
22	2902044	1	Wiper	
23	2902044	1	T-Seal	
24	4640509	2	Cartridge, Valve (Counterbalance Non-Vented)	
24	2900792	2	Seal Kit - 4640509 Valve	
25	2220886	1	Plug, O-Ring	
30	2902044	1	Seal Kit, Cylinder (Includes Items 15-23)	

FIGURE 5-11. USA BUILT MACHINES/MASTER CYLINDER (450A SERIES II) (ORIGINAL EQUIPMENT) (SN 0300065080 through 0300123999)

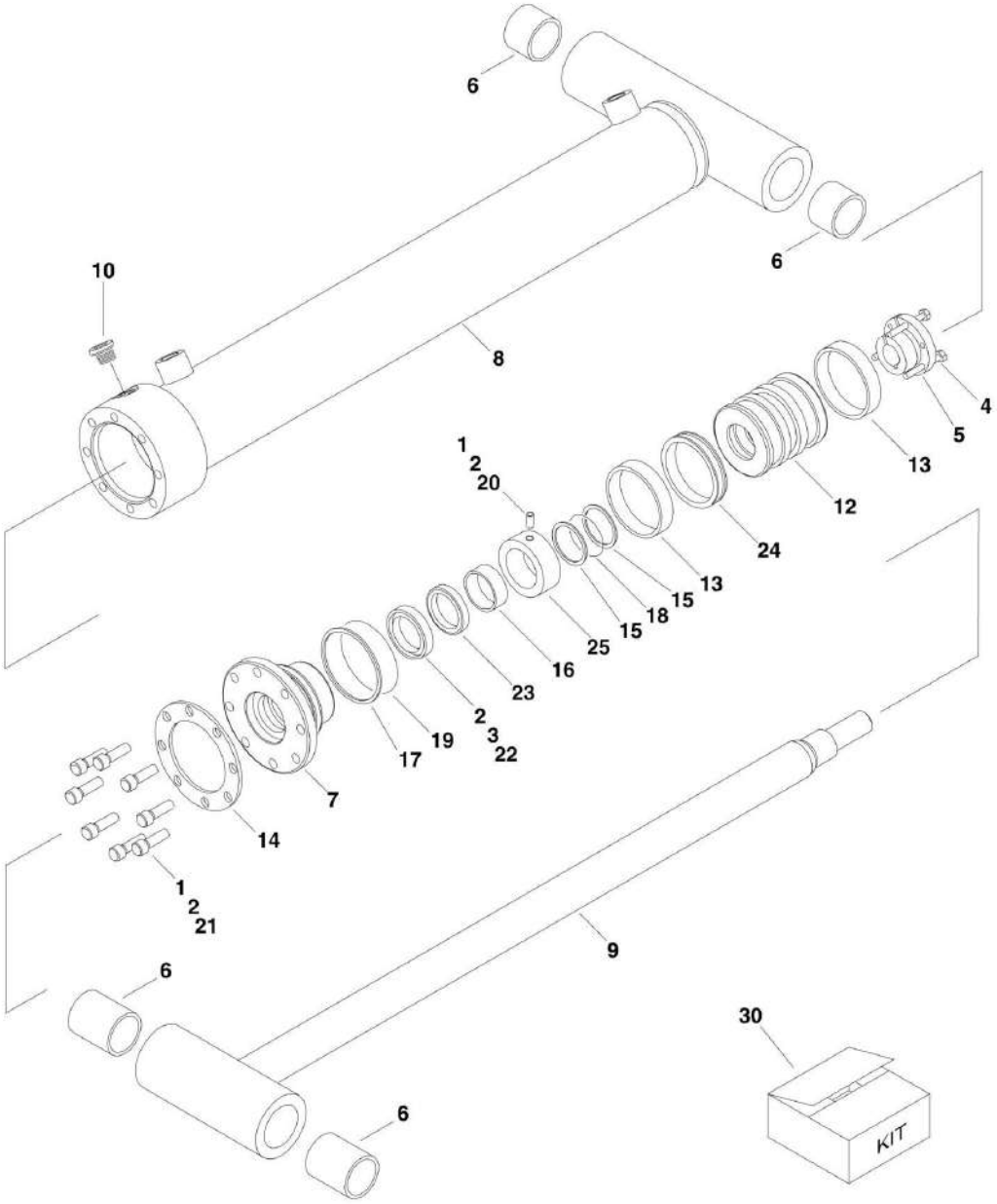

FIGURE 5-11. USA BUILT MACHINES/MASTER CYLINDER (450A SERIES II) (ORIGINAL EQUIPMENT) (SN 0300065080 through 0300123999)

ITEM	PART NUMBER	QTY	DESCRIPTION	REV
		Ref	**Note: Original Equipment Cylinder may have been replaced with Service Replacement Cylinder. Identify p/n stamped on cylinder before ordering parts.**	
		Ref	**Manufactured in USA (SN 1st digit is 0)**	
	1684170	Ref	**MASTER CYLINDER ASSEMBLY (450A SERIES II) (ORIGINAL EQUIPMENT)**	A
1	0100011	AR	Compound, Locking	
2	0100038	AR	Primer, Locking	
3	0100035	AR	Loctite RC 609	
4	0630534	3	Capscrew #10-24NC x 1in	
5	0962185	1	Bushing, Tapered	
6	0961947	4	Bushing, Garmax	
7	1683050	1	Head	
8	1684171	1	Barrel Weldment	
9	1684172	1	Rod Weldment	
10	2220885	1	Plug, O-Ring	
12	3480232	1	Piston	
13	2901549	2	Ring, Wear	
14	3760367	1	Ring, Washer	
15	2901549	2	Ring, Back-up	
16	2901549	1	Ring, Wear	
17	2901549	1	Ring, Back-up	
18	2901549	1	O-Ring	
19	2901549	1	O-Ring	
20	3900139	1	Setscrew 1/4in-20NC x 1/2in	
21	3931516	8	Capscrew 5/16in-18NC x 1in	
22	2901549	1	Wiper	
23	2901549	1	Seal	
24	2901549	1	T-Seal	
25	4568068	1	Tube, Spacer	
30	2901549	1	Seal Kit, Cylinder (Includes Items 13, 15-19 & 22-24)	

FIGURE 5-12. USA BUILT MACHINES/MASTER CYLINDER (450A SERIES II) (SERVICE REPLACEMENT) (SN 0300065080 through 0300123999)

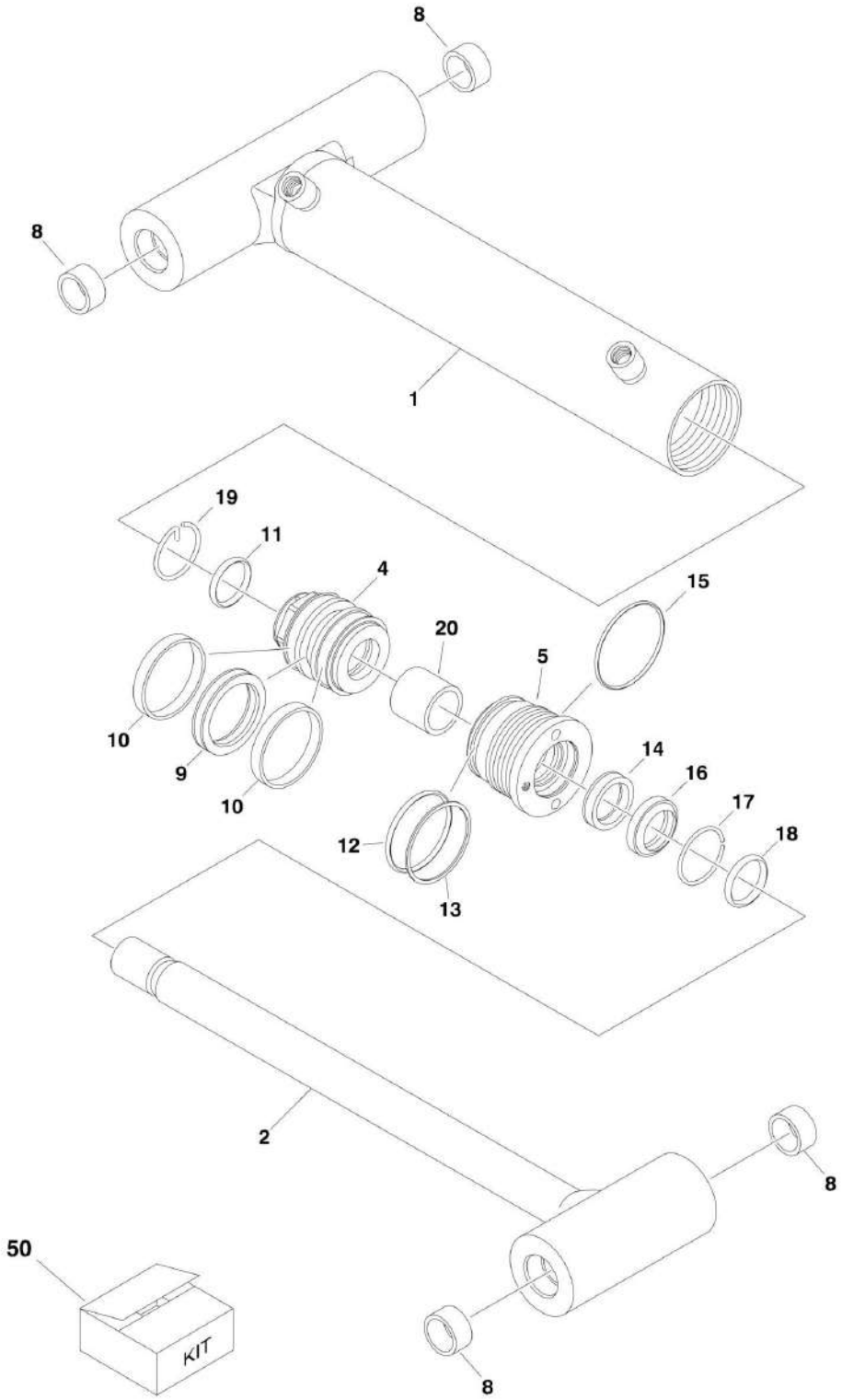

FIGURE 5-12. USA BUILT MACHINES/MASTER CYLINDER (450A SERIES II) (SERVICE REPLACEMENT) (SN 0300065080 through 0300123999)

ITEM	PART NUMBER	QTY	DESCRIPTION	REV
		Ref	**Note: Original Equipment Cylinder may have been replaced with Service Replacement Cylinder. Identify p/n stamped on cylinder before ordering parts.**	
		Ref	**Manufactured in USA (SN 1st digit is 0)**	
	1001140276	Ref	**MASTER CYLINDER ASSEMBLY (450A SERIES II) (SERVICE REPLACEMENT)**	A
1	70003831	1	Barrel	
2	70003832	1	Rod	
4	70003810	1	Piston	
5	70003809	1	Head	
8	0961947	4	Bushing	
9	70003814	1	Seal	
10	70003814	2	Ring, Wear	
11	70003814	1	O-Ring	
12	70003814	1	O-Ring	
13	70003814	1	Ring, Back-up	
14	70003814	1	Seal	
15	70003814	1	O-Ring	
16	70003814	1	Wiper	
17	70002217	1	Ring, Retaining	
18	7026084	1	O-Ring	
19	70002216	1	Retainer	
20	70003830	1	Spacer	
50	70003814	1	Seal Kit (Includes Items 9-16)	

FIGURE 5-13. USA BUILT MACHINES/MASTER CYLINDER (450AJ SERIES II) (ORIGINAL EQUIPMENT) (SN 0300065080 through 0300123999)

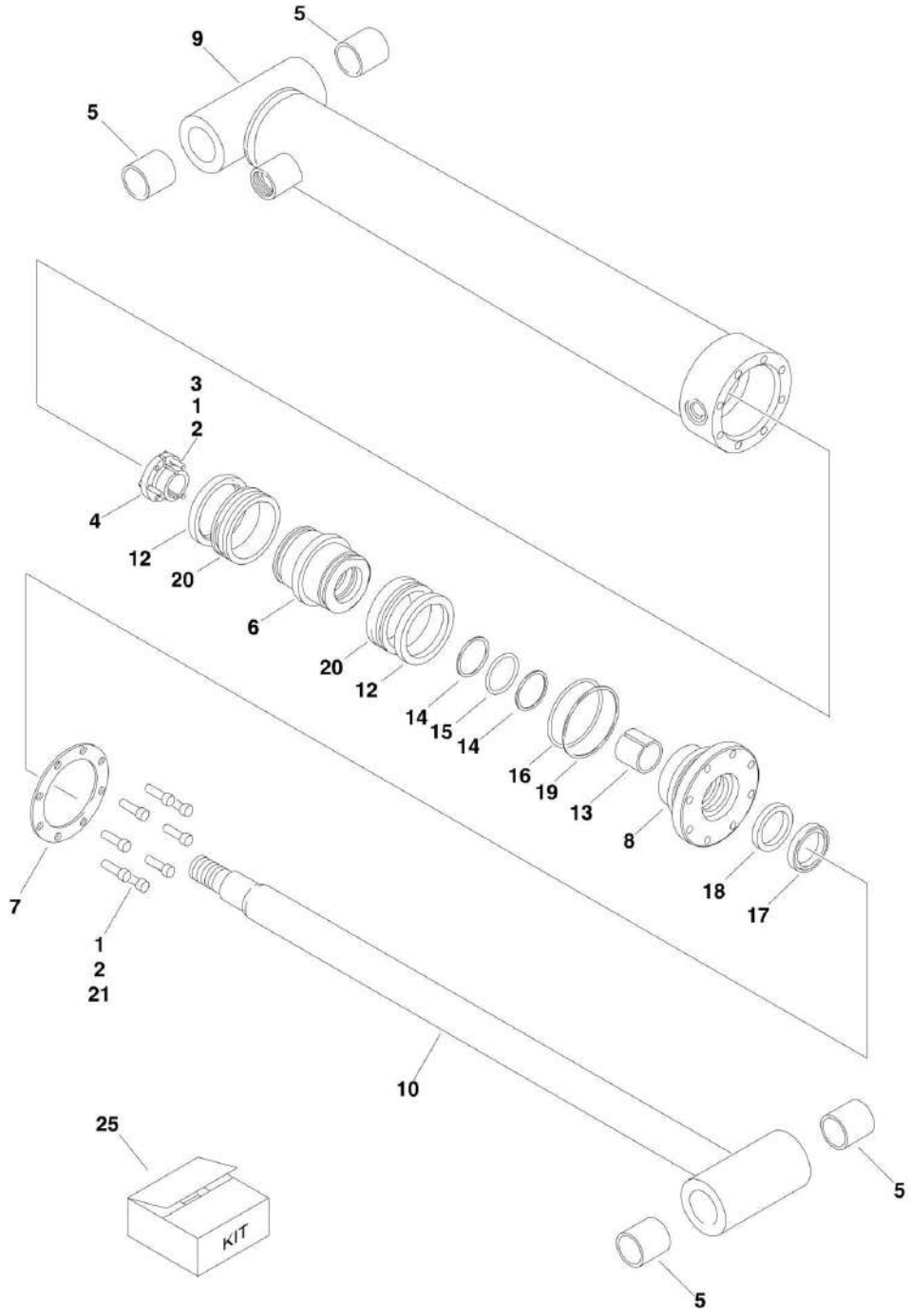

FIGURE 5-13. USA BUILT MACHINES/MASTER CYLINDER (450AJ SERIES II) (ORIGINAL EQUIPMENT) (SN 0300065080 through 0300123999)

ITEM	PART NUMBER	QTY	DESCRIPTION	REV
		Ref	**Note: Original Equipment Cylinder may have been replaced with Service Replacement Cylinder. Identify p/n stamped on cylinder before ordering parts.**	
		Ref	**Manufactured in USA (SN 1st digit is 0)**	
	1683773	Ref	**MASTER CYLINDER ASSEMBLY (450AJ SERIES II) (ORIGINAL EQUIPMENT)**	F
1	0100011	AR	Compound, Locking	
2	0100038	AR	Primer, Locking	
3	3931016	3	Bolt Socket Head #10-24NC x 1in	
4	0962185	1	Bushing, Tapered	
5	0961951	4	Bushing, Garmax	
6	3480247	1	Piston	
7	3760368	1	Washer, Ring	
8	1683052	1	Head	
9	1683756	1	Barrel	
10	1683772	1	Rod	
12	2901776	2	Ring, Lock	
13	2901776	1	Ring, Wear	
14	2901776	2	Ring, Back-Up	
15	2901776	1	O-Ring	
16	2901776	1	O-Ring	
17	2901776	1	Wiper	
18	2901776	1	Seal	
19	2901776	1	Ring, Back-Up	
20	2901776	2	Seal	
21	3931516	8	Bolt Socket Head 5/16in-18NC x 1in	
25	2901776	1	Seal Kit - Cylinder (Includes Items 12-20)	

FIGURE 5-14. USA BUILT MACHINES/MASTER CYLINDER (450AJ SERIES II) (SERVICE REPLACEMENT) (SN 0300065080 through 0300123999)

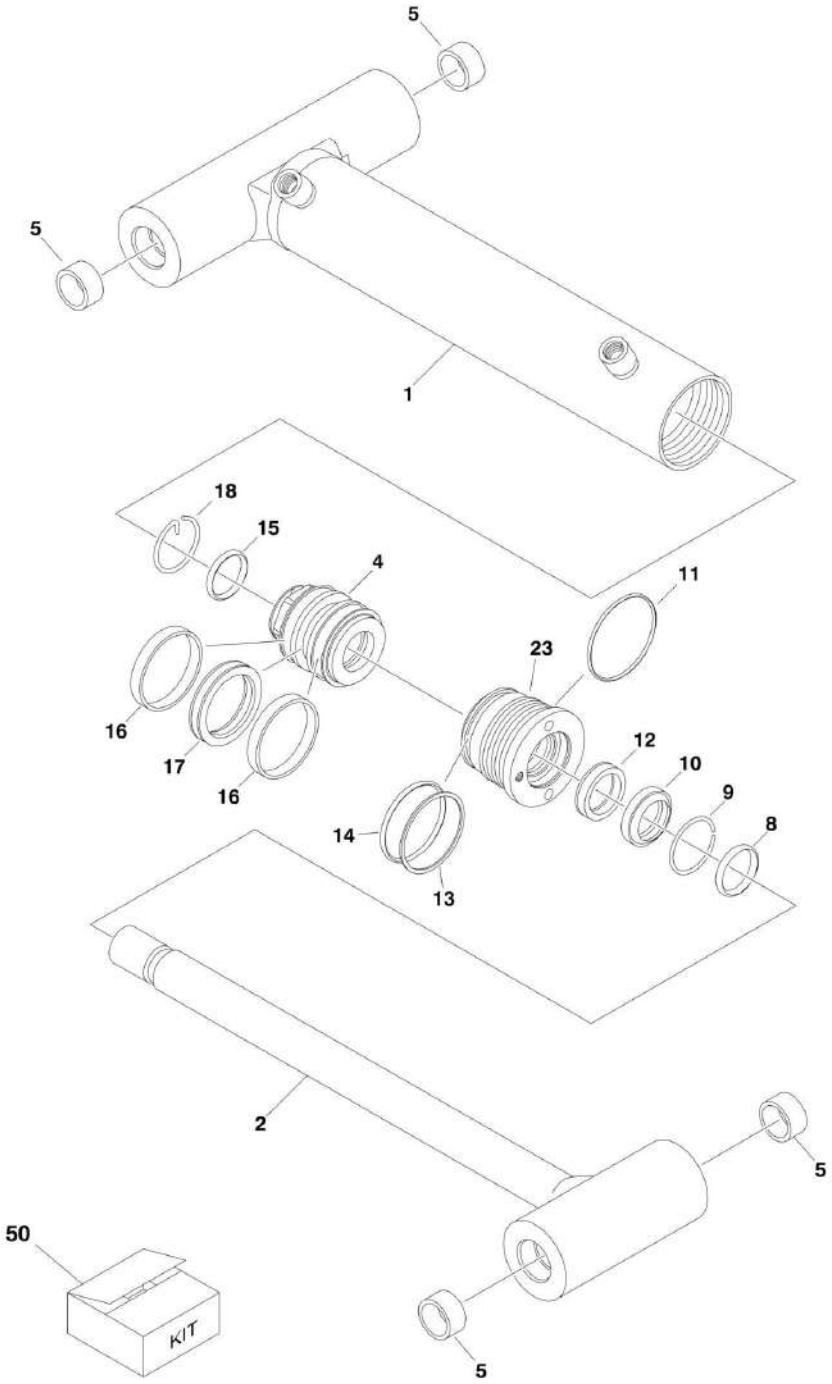

FIGURE 5-14. USA BUILT MACHINES/MASTER CYLINDER (450AJ SERIES II) (SERVICE REPLACEMENT) (SN 0300065080 through 0300123999)

ITEM	PART NUMBER	QTY	DESCRIPTION	REV
		Ref	**Note: Original Equipment component may have been replaced with Service Replacement component. Identify p/n stamped on cylinder before ordering parts.**	
		Ref	**Manufactured in USA (SN 1st digit is 0)**	
	1001140278	Ref	**MASTER CYLINDER ASSEMBLY (450AJ SERIES II) (SERVICE REPLACEMENT)**	A
1	70003843	1	Barrel	
2	70003844	1	Rod	
4	70003819	1	Piston	
5	0961951	4	Bushing	
8	7026084	1	O-Ring	
9	70002217	1	Ring, Retaining	
10	70003845	1	Wiper	
11	70003845	1	O-Ring	
12	70003845	1	Seal	
13	70003845	1	Ring, Back-up	
14	70003845	1	O-Ring	
15	70003845	1	O-Ring	
16	70003845	2	Ring, Wear	
17	70003845	1	Seal	
18	70002216	1	Retainer	
23	7026082	1	Head	
50	70003845	1	Seal Kit (Includes Items 10-17)	

FIGURE 5-15. USA BUILT MACHINES/STEER CYLINDER (SN 0300065080 through 0300087392)

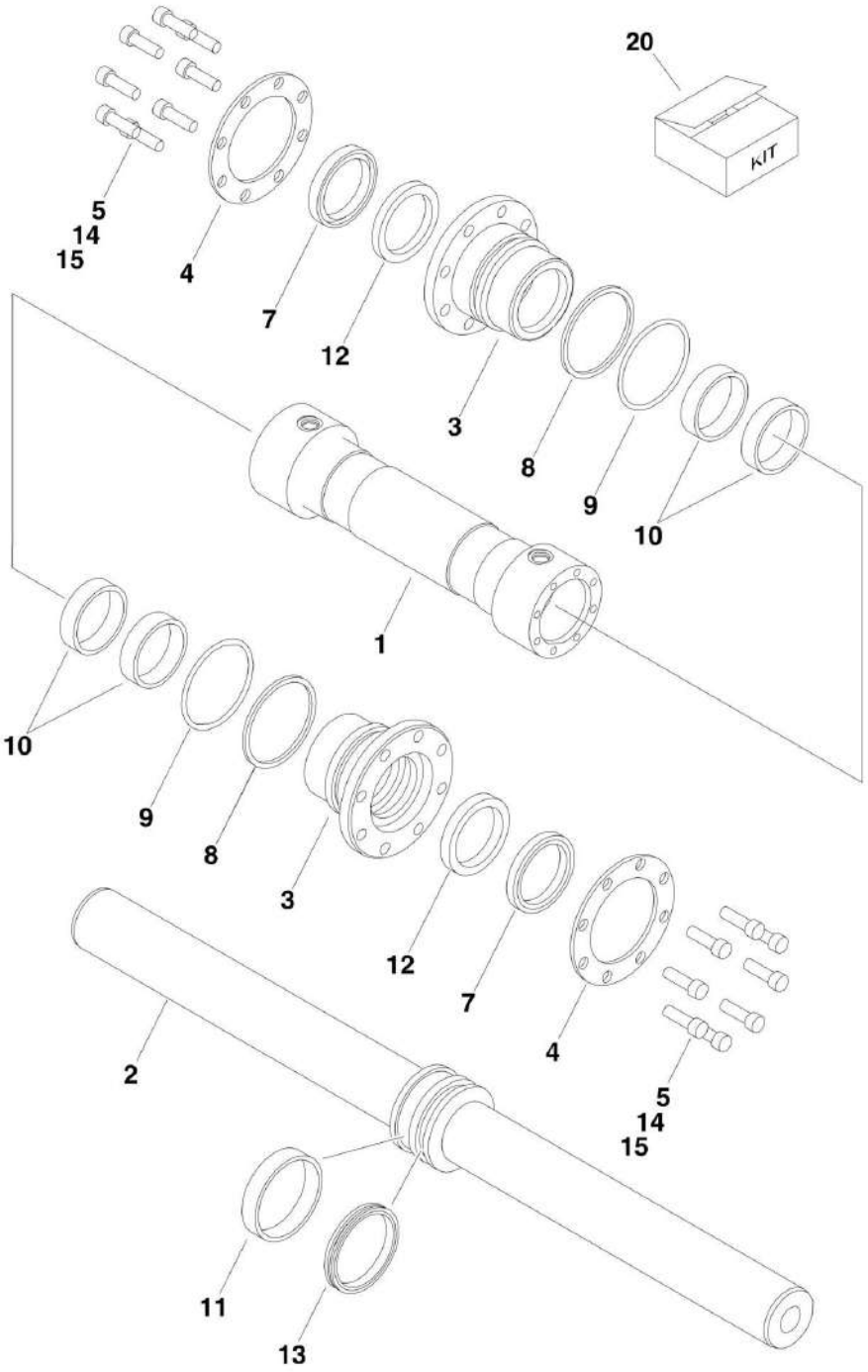

FIGURE 5-15. USA BUILT MACHINES/STEER CYLINDER (SN 0300065080 through 0300087392)

ITEM	PART NUMBER	QTY	DESCRIPTION	REV
		Ref	**Note: Original Equipment Cylinder may have been replaced with Service Replacement Cylinder. Identify p/n stamped on cylinder before ordering parts.**	
		Ref	**Manufactured in USA (SN 1st digit is 0)**	
	1683614	Ref	**STEER CYLINDER ASSEMBLY**	C
1	1683615	1	Barrel Weldment	
2	1683658	1	Rod Weldment	
3	1683076	2	Cap	
4	3760367	2	Washer, Ring	
5	3931516	16	Bolt, Socket Head 5/16in-18NC x 2in	
7	2901547	1	Wiper	
8	2901547	2	Ring, Back-up	
9	2901547	2	O-Ring	
10	2901547	4	Ring, Wear	
11	2901547	1	Ring, Wear	
12	2901547	2	Seal	
13	2901547	1	T-Seal	
14	0100011	AR	Compound, Locking	
15	0100038	AR	Primer, Locking	
20	2901547	1	Seal Kit, Cylinder (Includes Items 7-13)	

FIGURE 5-16. USA BUILT MACHINES/STEER CYLINDER (SN 0300087393 through 0300123999)

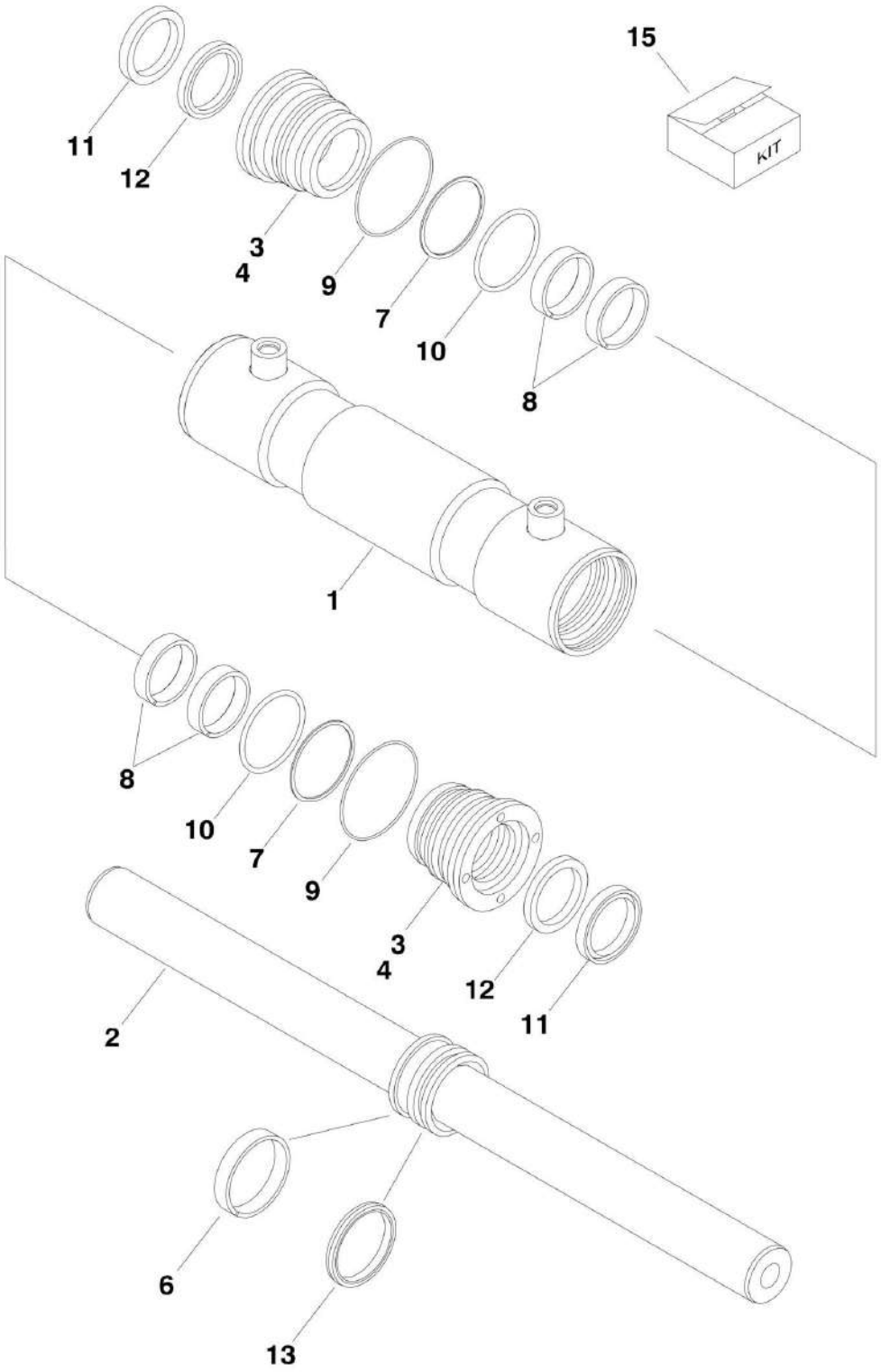

FIGURE 5-16. USA BUILT MACHINES/STEER CYLINDER (SN 0300087393 through 0300123999)

ITEM	PART NUMBER	QTY	DESCRIPTION	REV
	1684412	Ref	**Manufactured in USA (SN 1st digit is 0)**	A
	1684412	Ref	**STEER CYLINDER ASSEMBLY**	A
1	0370024	1	Barrel Weldment	
2	1683658	1	Rod Weldment	
3	2570008	2	Head, Cylinder	
4	3020043	1	Lube, Anti-Seize	
6	2902409	1	Ring, Wear	
7	2902409	2	Ring, Back-up	
8	2902409	4	Ring, Wear	
9	2902409	2	O-Ring	
10	2902409	2	O-Ring	
11	2902409	2	Wiper	
12	2902409	2	Seal	
13	2902409	1	T-Seal	
15	2902409	1	Seal Kit, Cylinder (Includes Items 6-13)	

FIGURE 5-17. USA BUILT MACHINES/TELESCOPE CYLINDER (SN 0300065080 through 0300123999)

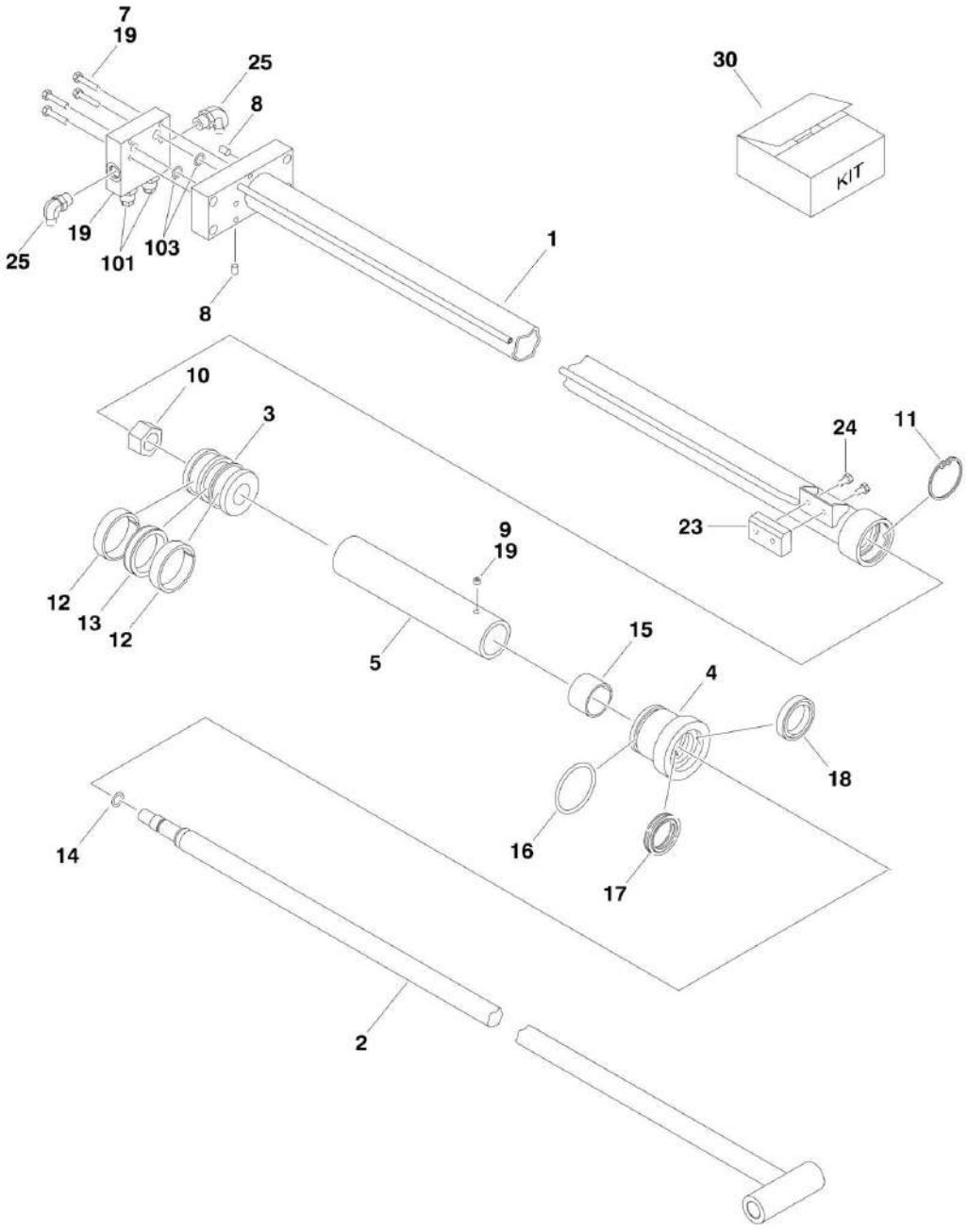

FIGURE 5-17. USA BUILT MACHINES/TELESCOPE CYLINDER (SN 0300065080 through 0300123999)

ITEM	PART NUMBER	QTY	DESCRIPTION	REV
		Ref	**TELESCOPE CYLINDER ASSEMBLY**	
	1684095	Ref	**Telescope Cylinder Assembly (450A Series II) (Manufactured in USA) (SN 1st digit is 0)**	E
	1684140	Ref	**Telescope Cylinder Assembly (450AJ Series II) (Manufactured in USA) (SN 1st digit is 0)**	4-E
1		Ref	Barrel Weldment Options:	
1	1684096	1	Barrel Weldment (450A Series II)	
1	1683800	1	Barrel Weldment (450AJ Series II)	
2		Ref	Rod Weldment Options:	
2	1684098	1	Rod Weldment (450A Series II)	
2	1683802	1	Rod Weldment (450AJ Series II)	
3	3480239	1	Piston	
4	1682892	1	Head	
5		Ref	Spacer, Tube Options:	
5	4568218	1	Spacer, Tube (450A Series II)	
5	4566027	1	Spacer, Tube (450AJ Series II)	
6	4641200	1	Counterbalance Valve Assembly (See Items 101-103 for Breakdown)	
7	0641512	4	Bolt 5/16in-18NC x 1-1/2in	
8	2220883	2	Plug, O-Ring	
9	3951402	1	Setscrew 1/4in-20NC x 1/4in	
10	3322205	1	Locknut	
11	3760318	1	Ring, Retaining	
12	2902073	2	Ring, Wear	
13	2902073	1	Seal, Cap	
14	2902073	1	O-Ring	
15	2902073	1	Ring, Wear	
16	2902073	1	O-Ring	
17	2902073	1	Seal, Rod	
18	2902073	1	Wiper	
19	0100011	AR	Compound, Locking	
23		Ref	Wear Pad Assembly Options:	
23	Not Required	0	Wear Pad Assembly (450A Series II)	
23	3340679	1	Wear Pad Assembly (450AJ Series II) **(SN 0300065080 through 0300065633)**	
24	0641604	2	Bolt 3/8in-16NC x 1/2in **(SN 0300065080 through 0300065633)**	
25	2130608	2	Adapter, Elbow **(SN 0300065161 through 0300123999)**	
30	2902073	1	Seal Kit, Cylinder (Includes Items 12-18)	
	4641200	Ref	**COUNTERBALANCE VALVE ASSEMBLY**	C
101	7011347	2	Cartridge, Counterbalance	
101	2900770	2	Seal Kit - Cartridge (1 Per Cartridge)	
103	3790113	2	O-Ring (Between Valve and Cylinder Block)	

FIGURE 5-18. BELGIUM BUILT MACHINES/AXLE LOCKOUT CYLINDER (Prior to SN 1300003222)

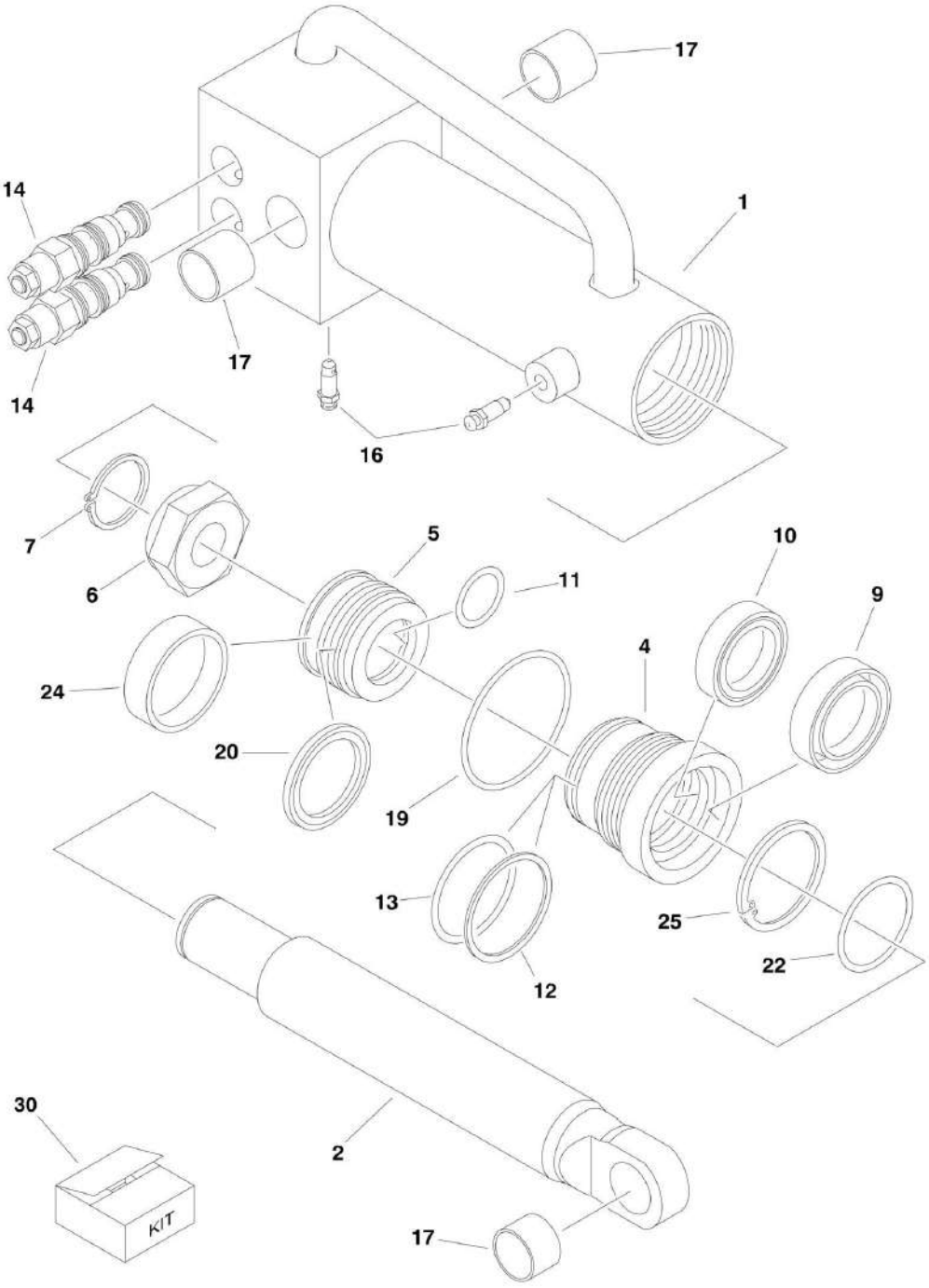

FIGURE 5-18. BELGIUM BUILT MACHINES/AXLE LOCKOUT CYLINDER (Prior to SN 1300003222)

ITEM	PART NUMBER	QTY	DESCRIPTION	REV
		Ref	**Manufactured in Belgium (SN 1st digit is 1)**	
	1684243	Ref	**AXLE LOCKOUT CYLINDER ASSEMBLY**	E
1	7026114	1	Barrel	
2	7026115	1	Rod	
4	7026104	1	Head	
5	7026110	1	Piston	
6	7026111	1	Locknut	
7	70002216	1	Ring, Retaining	
9	7026116	1	Wiper	
10	7026116	1	Seal	
11	7026116	1	O-Ring	
12	7026116	1	Ring, Back-up	
13	7026116	1	O-Ring	
14	4641162	2	Cartridge, Valve	
14	2900770	2	Seal Kit - 4641162 Valve (1 Per Assembly)	
16	4640858	2	Bleeder	
17	0962466	3	Bearing	
19	7026116	1	O-Ring	
20	7026116	1	Seal	
21	7026116	1	O-Ring (Not Shown)	
22	7026116	1	O-Ring	
24	Item 30	1	Ring, Wear	
25	70002219	1	Ring, Retaining	
30	7026116	1	Seal Kit, Cylinder (Includes Items 9-13, 19-22 & 24)	

FIGURE 5-19. BELGIUM BUILT MACHINES/AXLE LOCKOUT CYLINDER (SN 1300003222 through 1300006000)

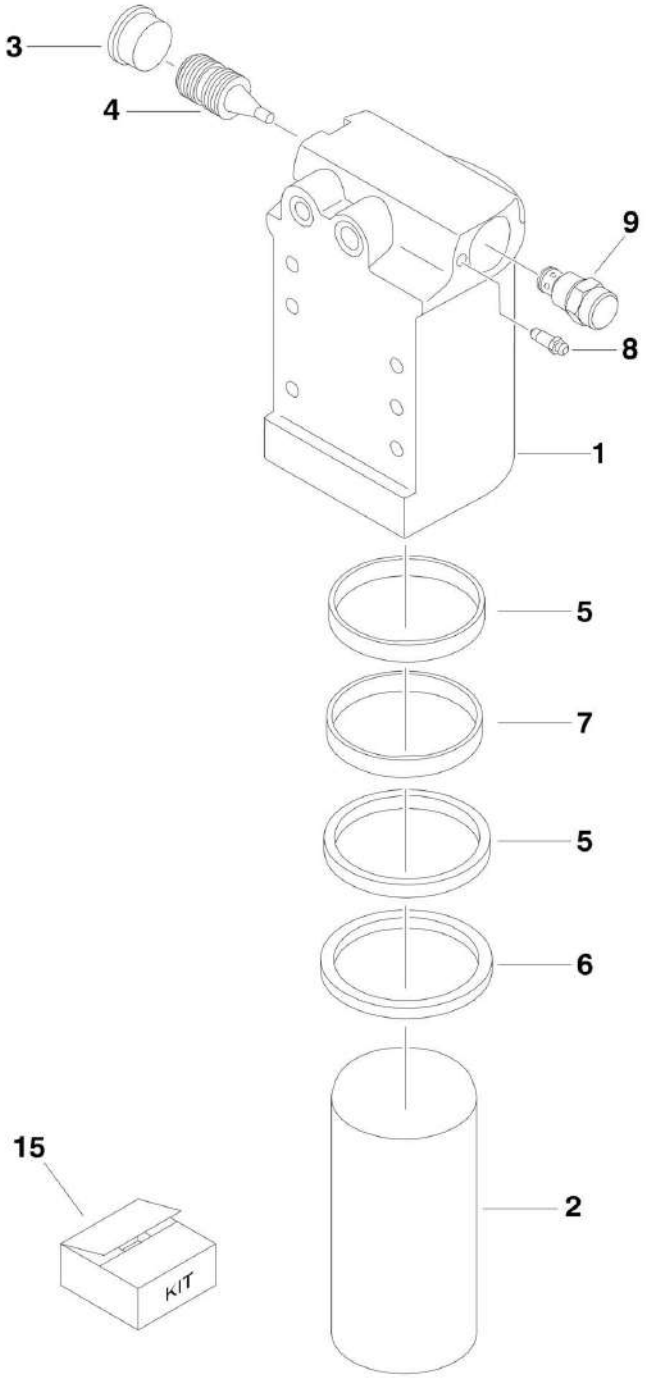

FIGURE 5-19. BELGIUM BUILT MACHINES/AXLE LOCKOUT CYLINDER (SN 1300003222 through 1300006000)

ITEM	PART NUMBER	QTY	DESCRIPTION	REV
		Ref	**Manufactured in Belgium (SN 1st digit is 1)**	
	1684465	Ref	**AXLE LOCKOUT CYLINDER ASSEMBLY**	B
1	0370026	1	Barrel	
2	1684290	1	Rod	
3	2220890	1	Plug	
4	3480288	1	Piston, Pilot	
5	2902266	2	Ring, Wear	
6	2902266	1	Wiper	
7	2902266	1	Seal, Rod	
8	4640858	1	Bleeder	
9	4641390	1	Cartridge, Valve	
9	7017496	1	Seal Kit	
15	2902266	1	Seal Kit, Cylinder (Includes Items 4-6)	

FIGURE 5-20. BELGIUM BUILT MACHINES/LEVEL (PLATFORM) CYLINDER (450AJ SERIES II)

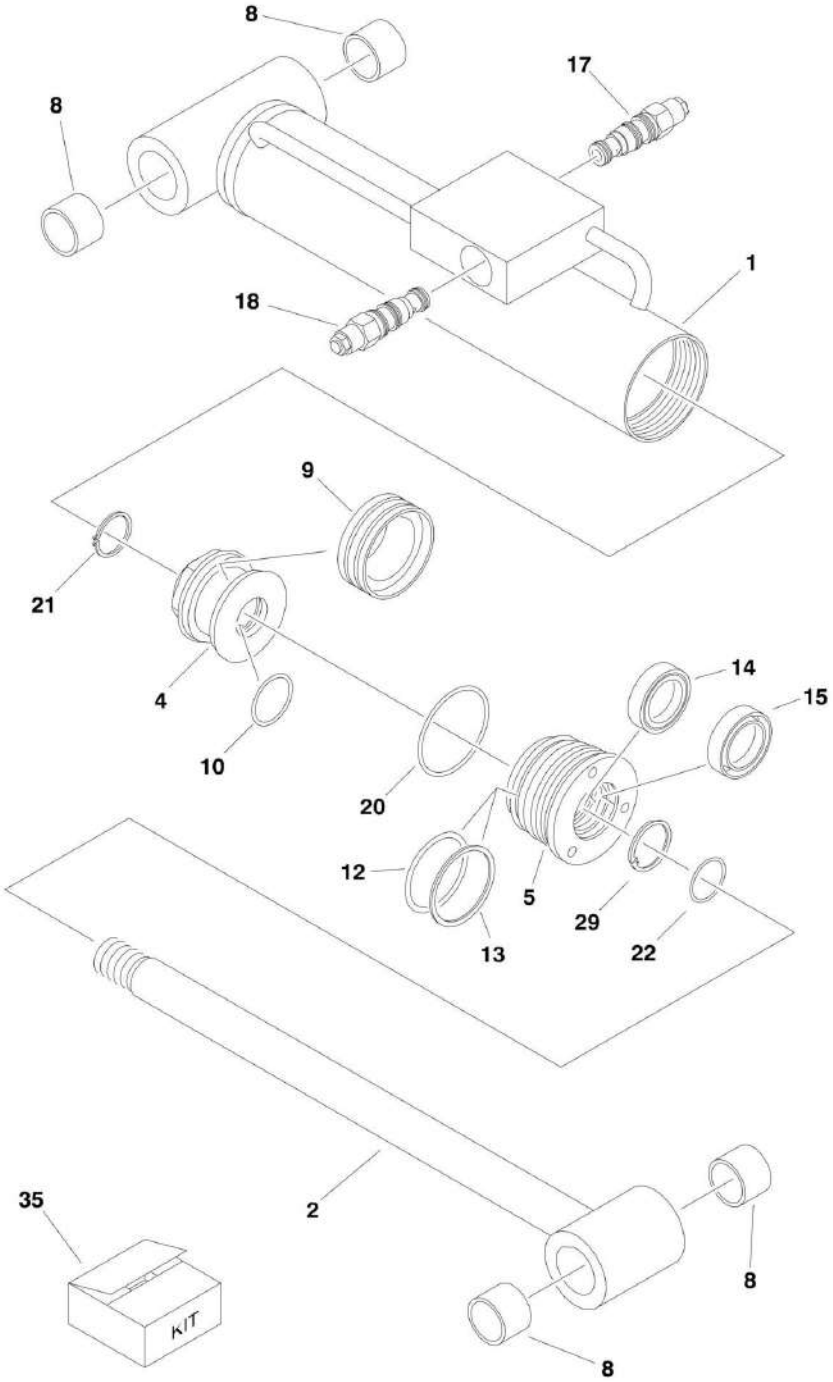

FIGURE 5-20. BELGIUM BUILT MACHINES/LEVEL (PLATFORM) CYLINDER (450AJ SERIES II)

ITEM	PART NUMBER	QTY	DESCRIPTION	REV
		Ref	**Note: Original Equipment Cylinder may have been replaced with Service Replacement Cylinder. Identify p/n stamped on cylinder before ordering parts.**	
		Ref	**Manufactured in Belgium (SN 1st digit is 1)**	
		Ref	**LEVEL CYLINDER ASSEMBLY**	
	1684240	Ref	**Level Cylinder Assembly (Prior to SN 1300004150)**	D
	1001094789	Ref	**Level Cylinder Assembly (SN 1300004150 through 1300006000)**	A
1	7026117	1	Barrel	
2	7026118	1	Rod	
4	7026081	1	Piston	
5	7026082	NLA	Head (1684240 Cylinder) (Use p/n 70005580)	
5	70005580	1	Head (1001094789 Cylinder)	
8	0961951	4	Bearing	
9	7026087	1	Seal	
10	7026087	1	O-Ring	
12	7026087	1	O-Ring	
13	7026087	1	Ring, Back-up	
14	7026087	1	Seal	
15	7026087	1	Wiper	
17		Ref	Cartridge, Valve Options:	
17	7011378	1	Cartridge **(Prior to SN 1300004150)**	
17	70001086	1	Cartridge **(SN 1300004150 through 1300006000)**	
17	2900770	1	Seal Kit - 7011378 & 70001086 Valves	
18	7011377	1	Cartridge, Valve	
18	7011358	1	Seal Kit - 7011377 Valve	
20	7026087	1	O-Ring	
21	70002216	1	Ring, Retaining	
22	7026087	1	O-Ring	
29	70002217	1	Ring, Retaining	
35	7026087	1	Seal Kit - Cylinder (Includes Items 9, 10, 12-15, 20, & 22) (Wear Rings (Not Shown) in Head p/n 70005580 are also included kit)	

FIGURE 5-21. BELGIUM BUILT MACHINES/LIFT (JIB) CYLINDER (450AJ SERIES II ONLY)

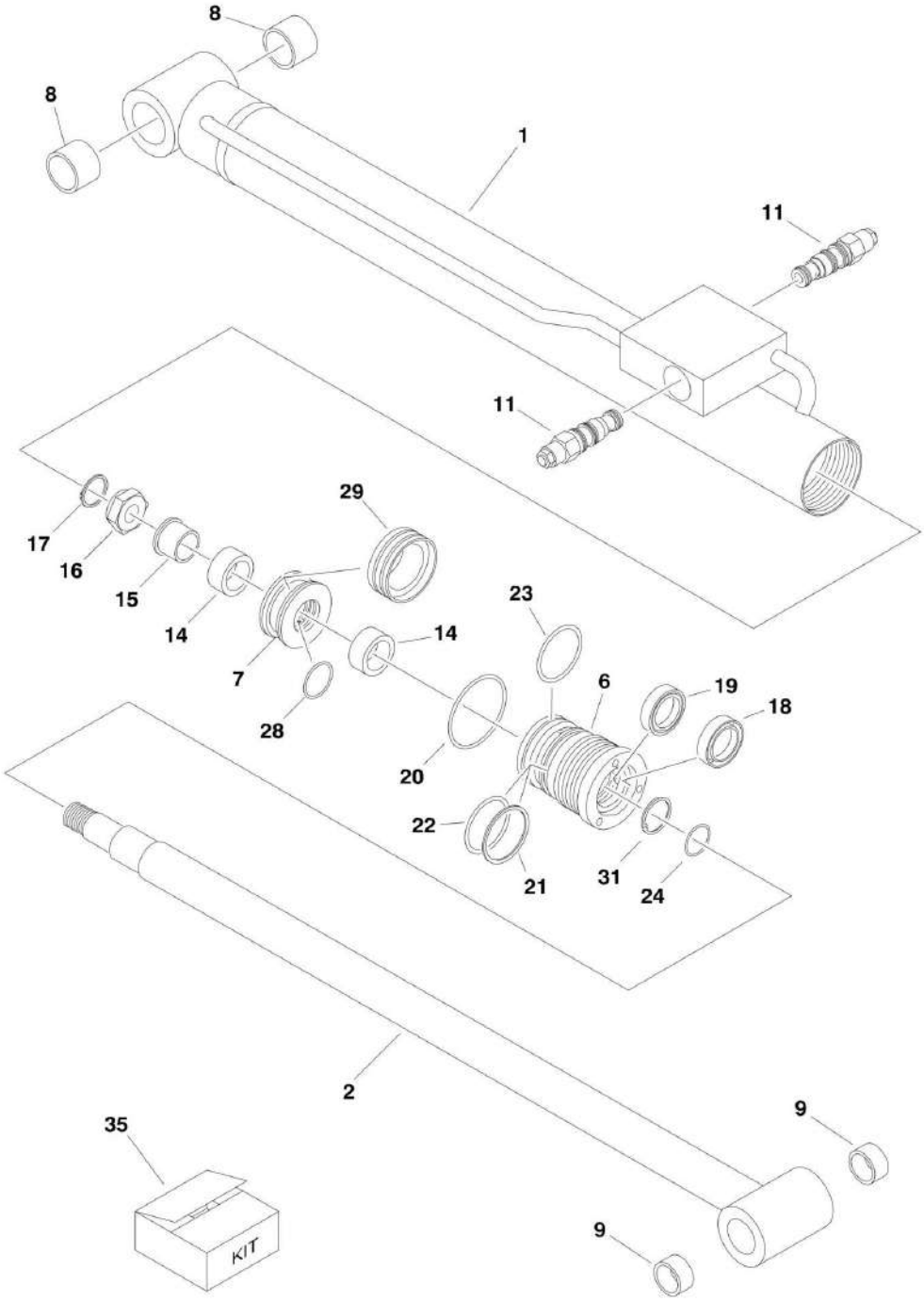

FIGURE 5-21. BELGIUM BUILT MACHINES/LIFT (JIB) CYLINDER (450AJ SERIES II ONLY)

ITEM	PART NUMBER	QTY	DESCRIPTION	REV
		Ref	**Manufactured in Belgium (SN 1st digit is 1)**	
	1684242	Ref	**JIB LIFT CYLINDER ASSEMBLY (450AJ SERIES II ONLY)**	B
1	7026093	1	Barrel	
2	7026094	1	Rod	
6	7026088	NLA	Head (Use p/n 70005581)	
7	7026089	1	Piston	
8	0961951	2	Bearing	
9	0961947	2	Bearing	
11	7026096	2	Cartridge, Valve	
11	2900770	2	Seal Kit - 7026096 Valve (1 Per Cartridge)	
14	7026090	2	Bushing	
15	7026091	1	Sleeve	
16	7026092	1	Nut	
17	70002223	1	Ring, Retaining	
18	7026095	1	Wiper	
19	7026095	1	Seal	
20	7026095	1	O-Ring	
21	7026095	1	Ring, Back-up	
22	7026095	1	O-Ring	
23	7026095	1	O-Ring	
24	7026095	1	O-Ring	
28	7026095	1	O-Ring	
29	7026095	1	Seal	
31	70002220	1	Ring, Retaining	
35	7026095	1	Seal Kit, Cylinder (Includes Items 18-24, 28 & 29)	

FIGURE 5-22. BELGIUM BUILT MACHINES/LIFT (MAIN BOOM) CYLINDER

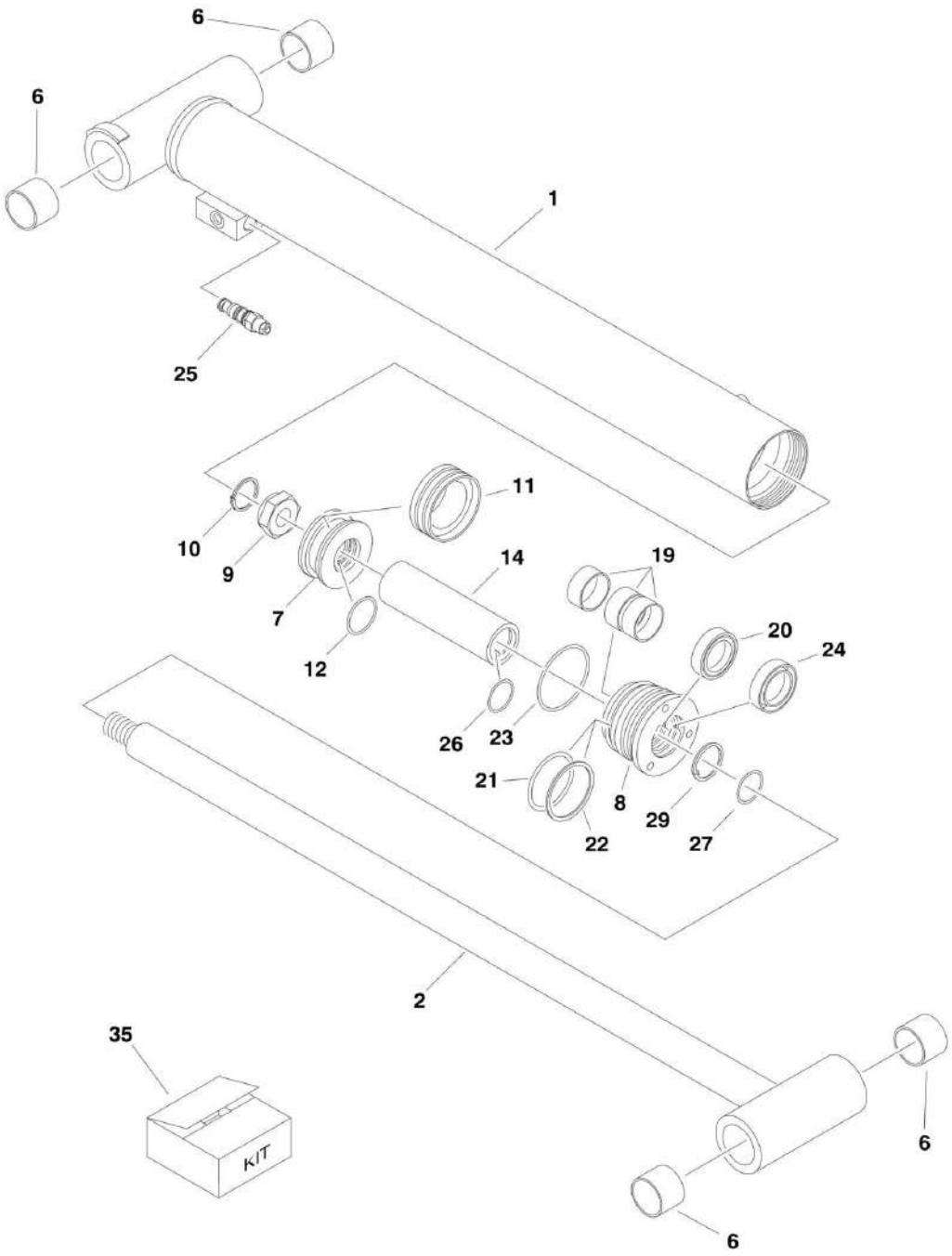

FIGURE 5-22. BELGIUM BUILT MACHINES/LIFT (MAIN BOOM) CYLINDER

ITEM	PART NUMBER	QTY	DESCRIPTION	REV
		Ref	**Manufactured in Belgium (SN 1st digit is 1)**	
	1684244	Ref	**MAIN LIFT CYLINDER ASSEMBLY**	E
1	7026101	1	Barrel	
2	7026102	1	Rod	
6	0961950	4	Bearing	
7	7026097	1	Piston	
8	7026098	1	Head	
9	7026099	1	Nut	
10	70002224	1	Ring, Retaining	
11	70002225	1	Seal	
12	70002225	1	O-Ring	
14	See Note	1	Spacer (Note: Not available for purchase)	
19	70002225	3	Ring, Wear	
20	70002225	1	Seal	
21	70002225	1	O-Ring	
22	70002225	1	Ring, Back-up	
23	70002225	1	O-Ring	
24	70002225	1	Wiper	
25	4640936	1	Cartridge, Valve	
25	2900770	1	Seal Kit - 4640936 Valve	
26	70002225	1	O-Ring	
27	70002225	1	O-Ring	
29	70002219	1	Ring, Retaining	
35	70002225	1	Seal Kit, Cylinder (Includes Items 11, 12, 19-24, 26 & 27)	

FIGURE 5-23. BELGIUM BUILT MACHINES/LIFT (TOWER BOOM) CYLINDER

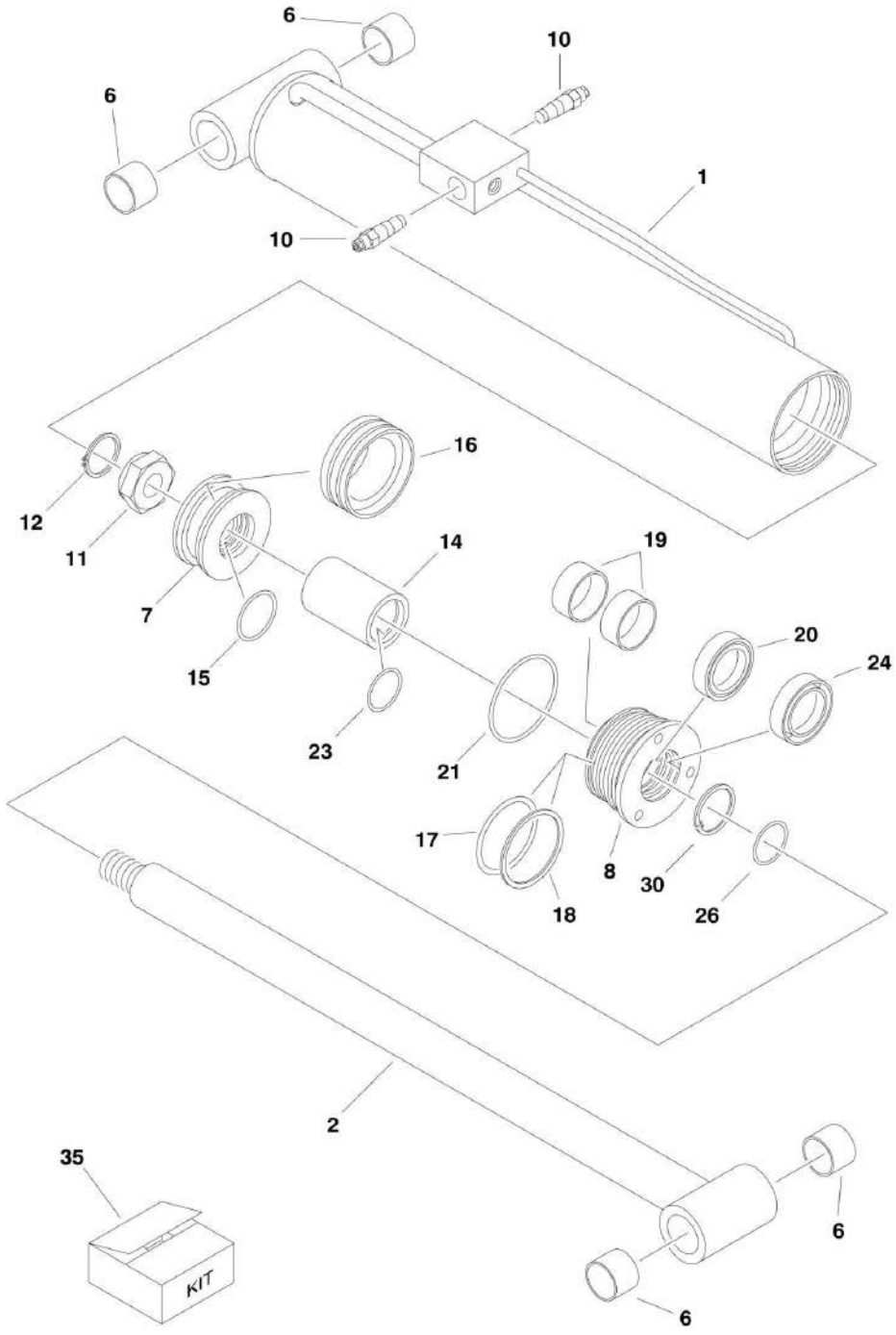

FIGURE 5-23. BELGIUM BUILT MACHINES/LIFT (TOWER BOOM) CYLINDER

ITEM	PART NUMBER	QTY	DESCRIPTION	REV
		Ref	**Manufactured in Belgium (SN 1st digit is 1)**	
	1684239	Ref	**TOWER LIFT CYLINDER ASSEMBLY**	D
1	7026078	1	Barrel	
2	7026079	1	Rod	
6	0961950	4	Bearing	
7	7026073	1	Piston	
8	7026074	1	Head	
10	4641260	2	Cartridge, Valve	
10	2900770	2	Seal Kit - 4641260 Valve (1 Per Assembly)	
11	7026075	1	Nut	
12	70002221	1	Ring, Retaining	
14	7026076	1	Spacer	
15	7026080	1	O-Ring	
16	7026080	1	Seal	
17	7026080	1	O-Ring	
18	7026080	1	Ring, Back-up	
19	7026080	2	Ring, Wear	
20	7026080	1	Seal	
21	7026080	1	O-Ring	
23	7026080	1	O-Ring	
24	7026080	1	Wiper	
26	7026080	1	O-Ring	
30	70002222	1	Ring, Retaining	
35	7026080	1	Seal Kit, Cylinder (Includes Items 15-21, 23, 24 & 26)	

FIGURE 5-24. BELGIUM BUILT MACHINES/MASTER CYLINDER (450AJ SERIES II)

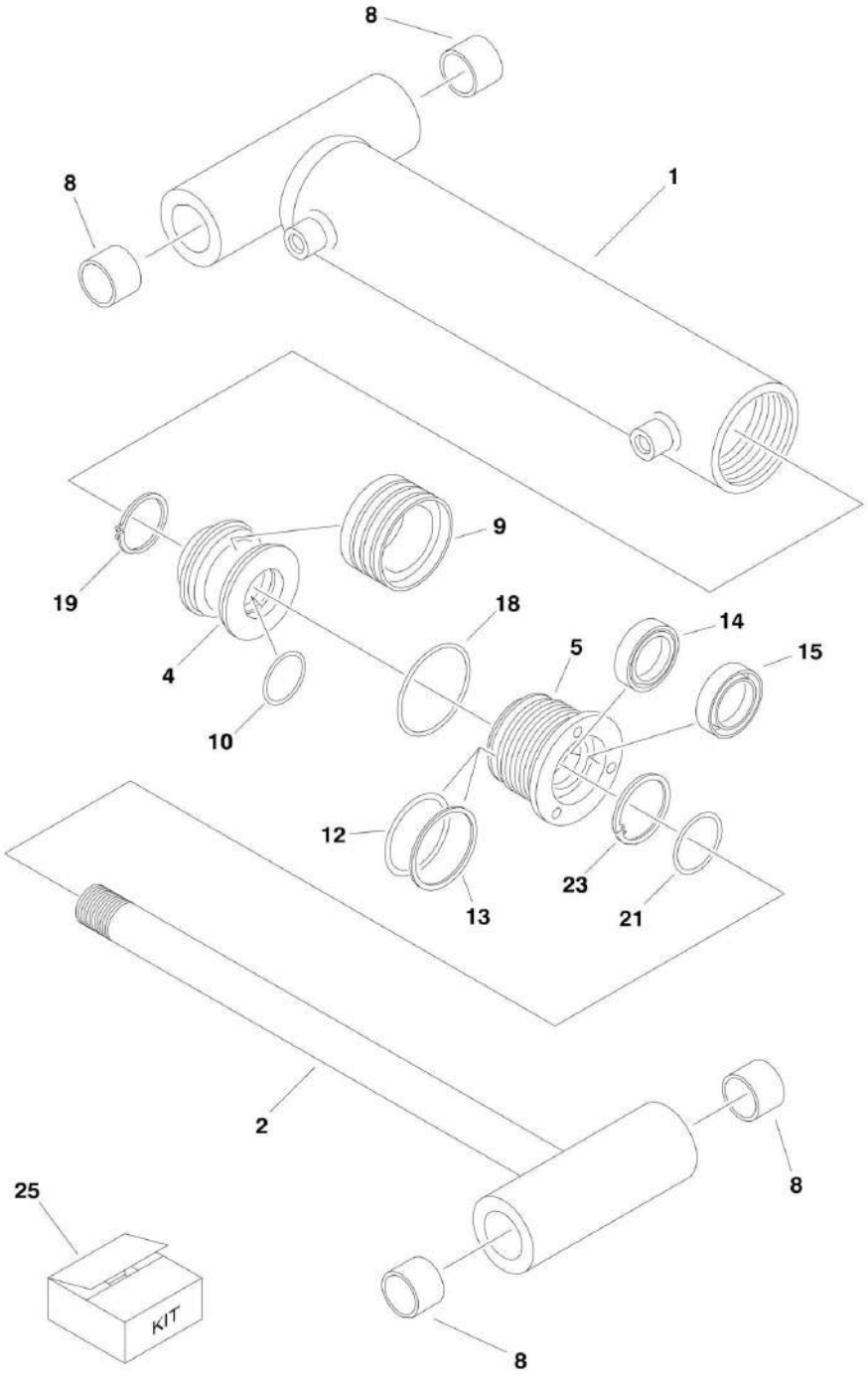

FIGURE 5-24. BELGIUM BUILT MACHINES/MASTER CYLINDER (450AJ SERIES II)

ITEM	PART NUMBER	QTY	DESCRIPTION	REV
		Ref	**Manufactured in Belgium (SN 1st digit is 1)**	
	1684241	Ref	**MASTER CYLINDER ASSEMBLY**	C
1	7026085	1	Barrel	
2	7026086	1	Rod	
4	7026081	1	Piston	
5	7026082	1	Head	
8	0961951	4	Bearing	
9	7026087	1	Seal	
10	7026087	1	O-Ring	
12	7026087	1	O-Ring	
13	7026087	1	Ring, Back-up	
14	7026087	1	Seal	
15	7026087	1	Wiper	
18	7026087	1	O-Ring	
19	70002216	1	Ring, Retaining	
21	7026087	1	O-Ring	
23	70002217	1	Ring, Retaining	
25	7026087	1	Seal Kit, Cylinder (Includes Items 9, 10, 12-15, 18 & 21)	

FIGURE 5-25. BELGIUM BUILT MACHINES/STEER CYLINDER

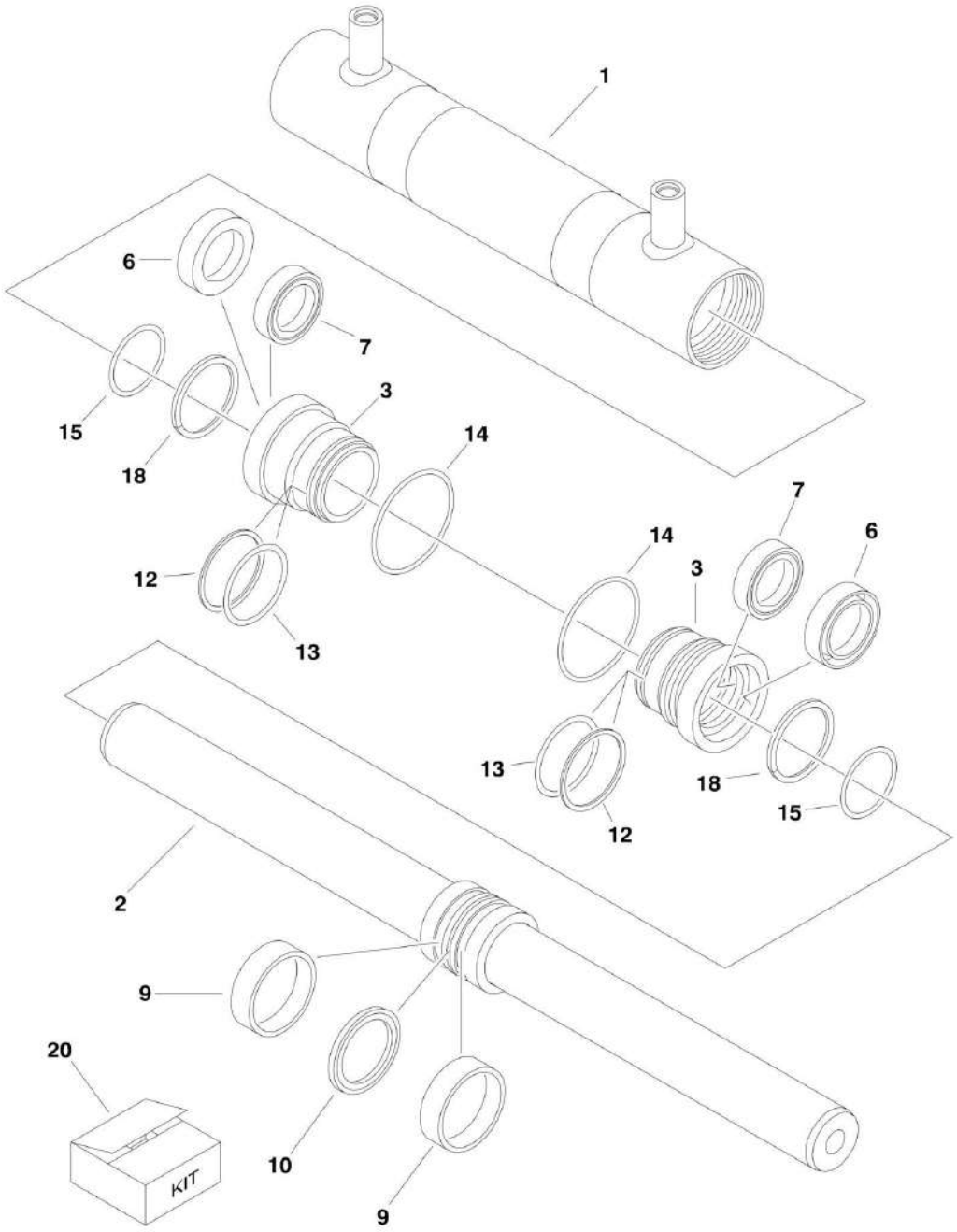

FIGURE 5-25. BELGIUM BUILT MACHINES/STEER CYLINDER

ITEM	PART NUMBER	QTY	DESCRIPTION	REV
		Ref	**Manufactured in Belgium (SN 1st digit is 1)**	
	1684246	Ref	**STEER CYLINDER ASSEMBLY**	B
1	7026105	1	Barrel	
2	7026106	1	Rod	
3	7026104	1	Head	
6	7026107	2	Wiper	
7	7026107	2	Seal	
9	7026107	2	Ring, Wear	
10	7026107	1	Seal	
12	7026107	2	Ring, Back-up	
13	7026107	2	O-Ring	
14	7026107	2	O-Ring	
15	7026100	2	O-Ring	
18	70002219	2	Ring, Retaining	
20	7026107	1	Seal Kit, Cylinder (Includes Items 6-10 & 12-14)	

FIGURE 5-26. BELGIUM BUILT MACHINES/TELESCOPE CYLINDER

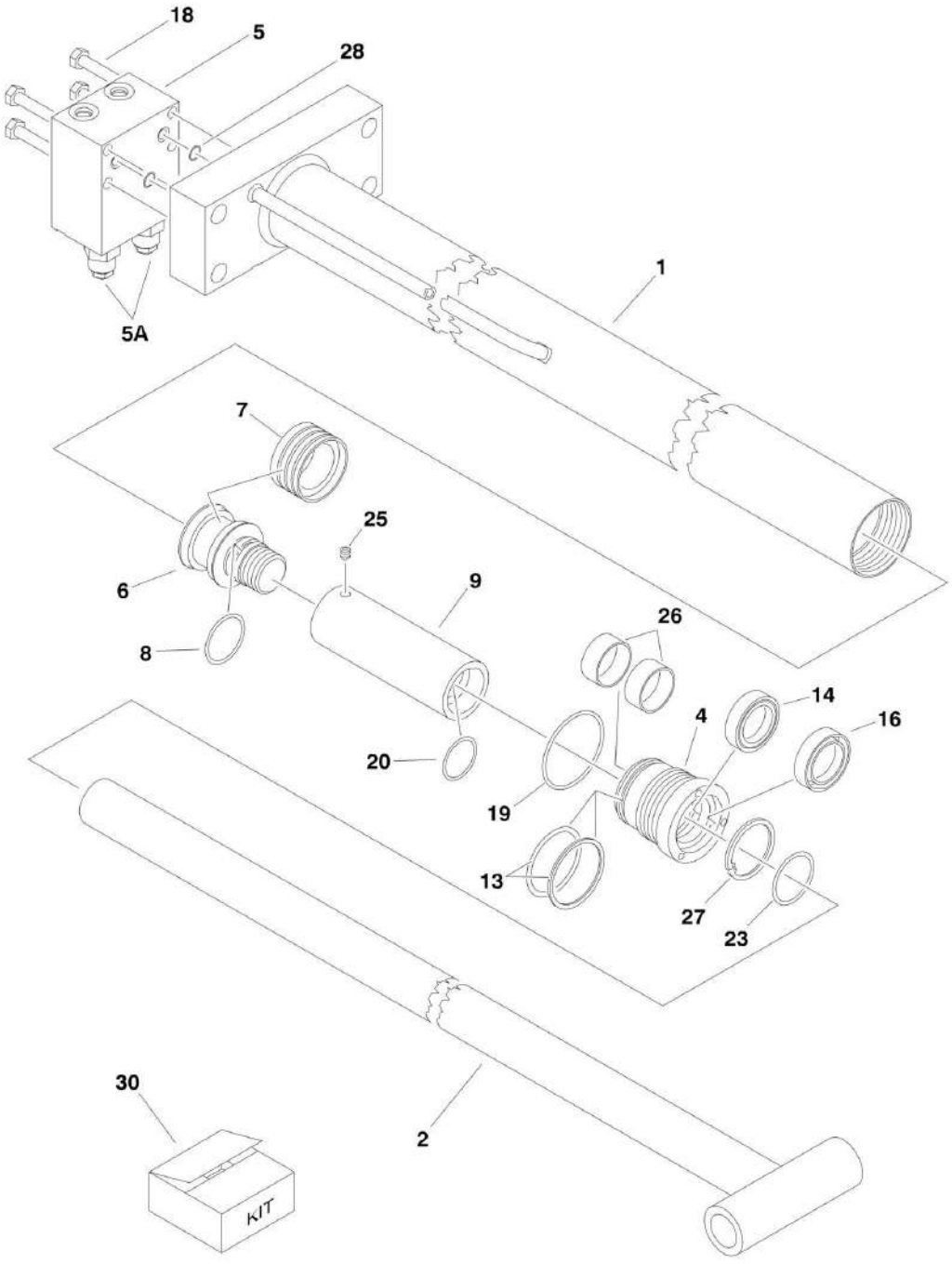

FIGURE 5-26. BELGIUM BUILT MACHINES/TELESCOPE CYLINDER

ITEM	PART NUMBER	QTY	DESCRIPTION	REV
		Ref	**Manufactured in Belgium (SN 1st digit is 1)**	
	1684262	Ref	**TELESCOPE CYLINDER ASSEMBLY**	C
1	7026108	1	Barrel	
2	7026109	1	Rod	
4	7026064	1	Head	
5	70001963	1	Valve Block Assembly w/Cartridges	
5A	7011347	2	Cartridge, Valve	
5A	2900770	2	Seal Kit - 7011347 Valve (1 Per Assembly)	
6	7026065	1	Piston	
7	7026072	1	Seal	
8	7026072	1	O-Ring	
9	7026066	1	Spacer	
13	7026072	1	O-Ring	
13	7026072	1	Ring, Back-up	
14	7026072	1	Seal	
16	7026072	1	Wiper	
18	7026067	4	Bolt	
19	7026072	1	O-Ring	
20	7026072	1	O-Ring	
23	7026072	1	O-Ring	
25	7026069	1	Setscrew	
26	7026072	2	Ring, Wear	
27	70002220	1	Ring, Retaining	
28	70000779	2	O-Ring	
30	7026072	1	Seal Kit, Cylinder (Includes Items 7, 8, 13, 14, 16, 19, 20, 23 & 26)	

SECTION 6 - HYDRAULIC

FIGURE 6-1. AXLE LOCKOUT HYDRAULIC DIAGRAM - 2WD (USA BUILT MACHINES AND BELGIUM BUILT MACHINES) (SN 0300065080 through 0300077284, Prior to SN 1300000353)

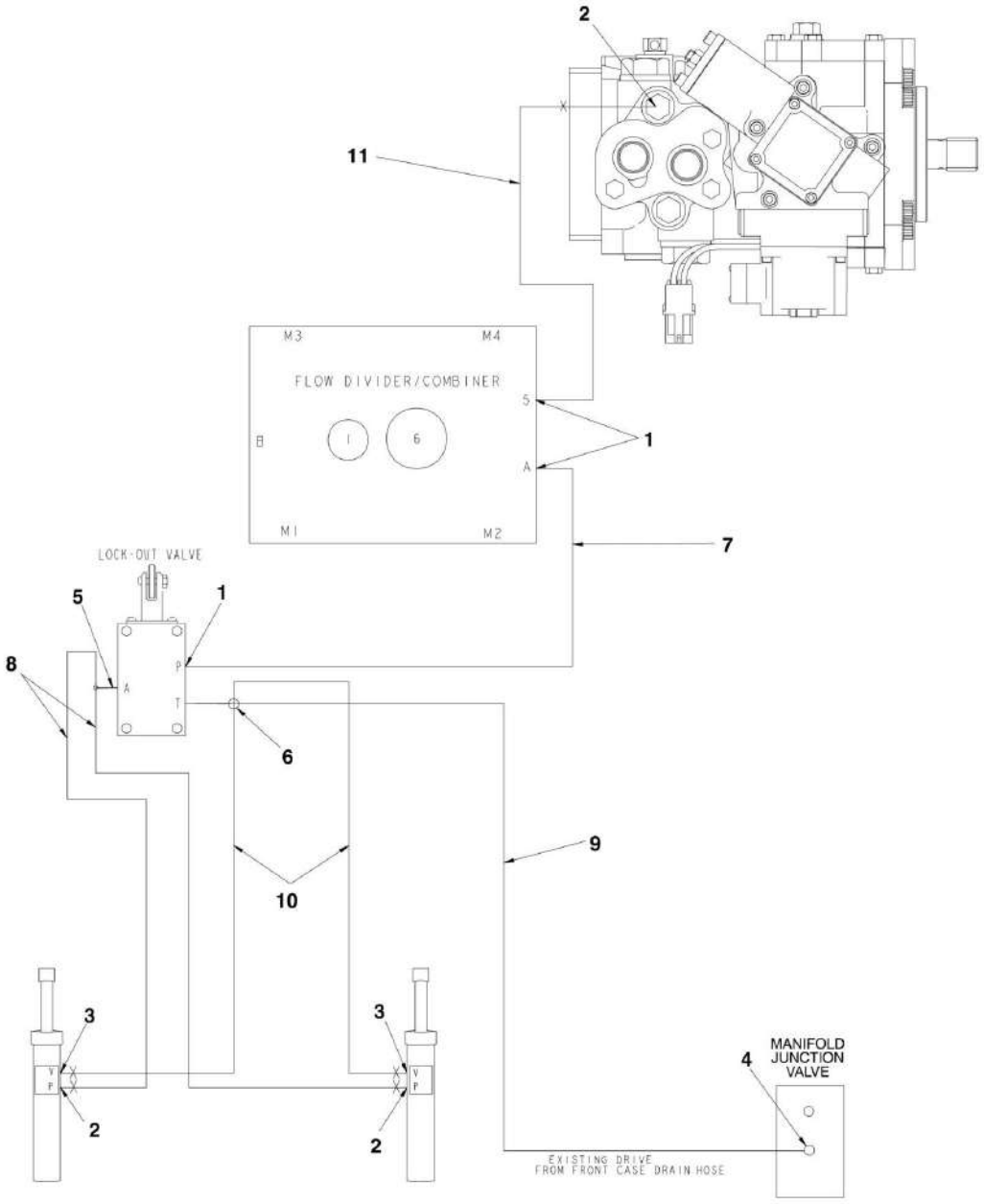

FIGURE 6-1. AXLE LOCKOUT HYDRAULIC DIAGRAM - 2WD (USA BUILT MACHINES AND BELGIUM BUILT MACHINES) (SN 0300065080 through 0300077284, Prior to SN 1300000353)

ITEM	PART NUMBER	QTY	DESCRIPTION	REV
		Ref	**AXLE LOCKOUT HYDRAULIC DIAGRAM**	
	2792472	Ref	**2WD**	1
1	2110404	3	Fitting, Fitting	
2	2110406	3	Fitting, Straight	
3	2110606	2	Fitting, Straight	
4	2130604	1	Fitting, Elbow	
5	2170404	1	Fitting, Tee	
6	2221083	1	Fitting, Cross	
7	2753540	1	Hose	
8	2753543	2	Hose	
9	2753576	1	Hose	
10	2753577	2	Hose	
11	2753544	1	Hose	

FIGURE 6-2. AXLE LOCKOUT HYDRAULIC DIAGRAM - 2WD (USA BUILT MACHINES AND BELGIUM BUILT MACHINES) (SN 0300077285 through 0300107511, SN 1300000353 through 1300003221)

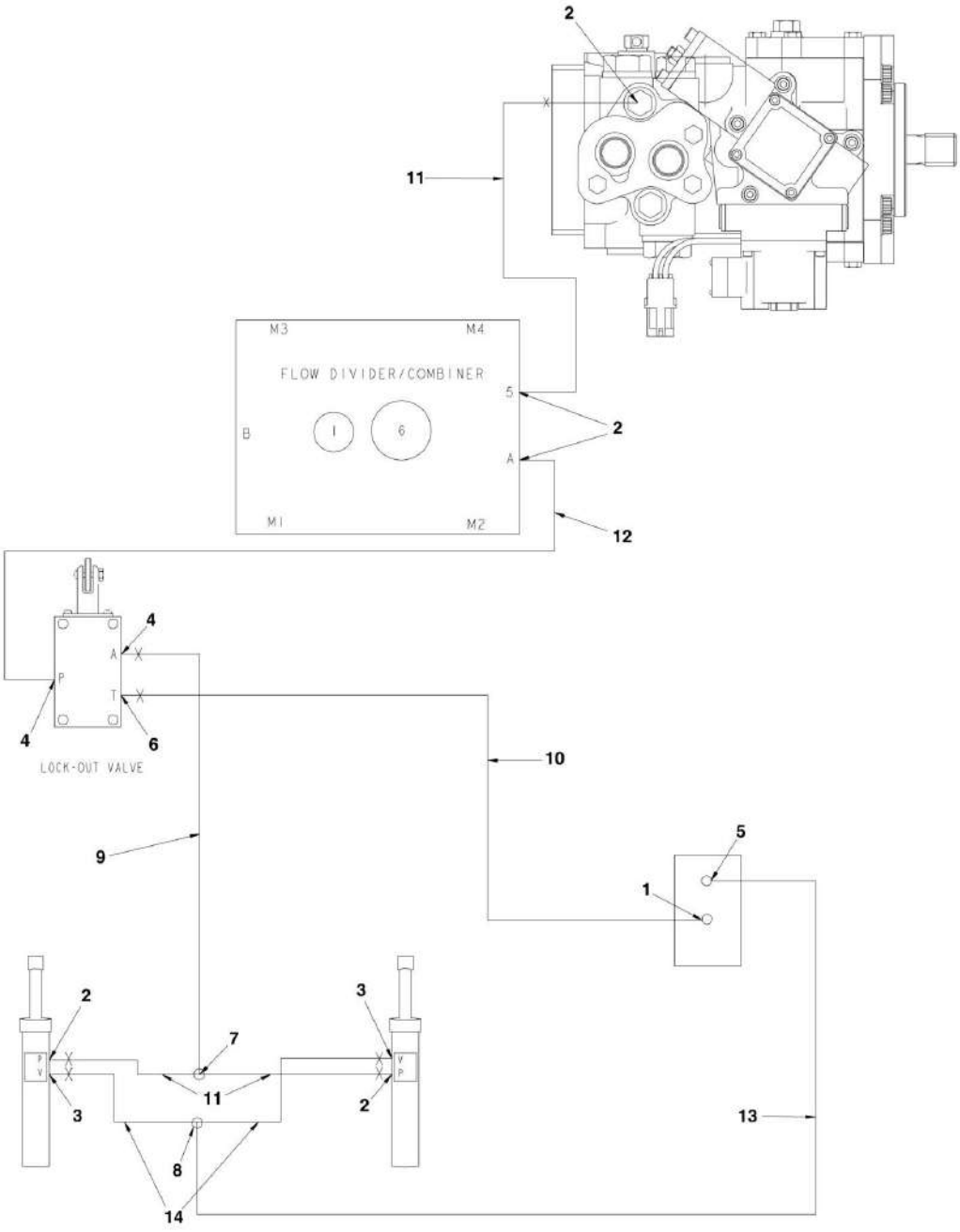

FIGURE 6-2. AXLE LOCKOUT HYDRAULIC DIAGRAM - 2WD (USA BUILT MACHINES AND BELGIUM BUILT MACHINES) (SN 0300077285 through 0300107511, SN 1300000353 through 1300003221)

ITEM	PART NUMBER	QTY	DESCRIPTION	REV
		Ref	**AXLE LOCKOUT HYDRAULIC DIAGRAM**	
	2792619	Ref	**2WD**	3
1	2110404	3	Fitting, Fitting	
2	2110406	3	Fitting, Straight	
3	2110606	2	Fitting, Straight	
4	2130404	2	Fitting, Elbow	
5	2130604	1	Fitting, Elbow	
6	2150404	1	Fitting, Elbow	
7	2170504	1	Fitting, Tee	
8	2170506	1	Fitting, Tee	
9	2753935	1	Hose	
10	2753934	1	Hose	
11	2753936	2	Hose	
12	2753937	1	Hose	
13	2753625	1	Hose	
14	2753577	2	Hose	
15	2753544	1	Hose	

FIGURE 6-3. AXLE LOCKOUT HYDRAULIC DIAGRAM - 2WD (USA BUILT MACHINES AND BELGIUM BUILT MACHINES) (SN 0300107512 through 0300123999, SN 1300003222 through 1300006000)

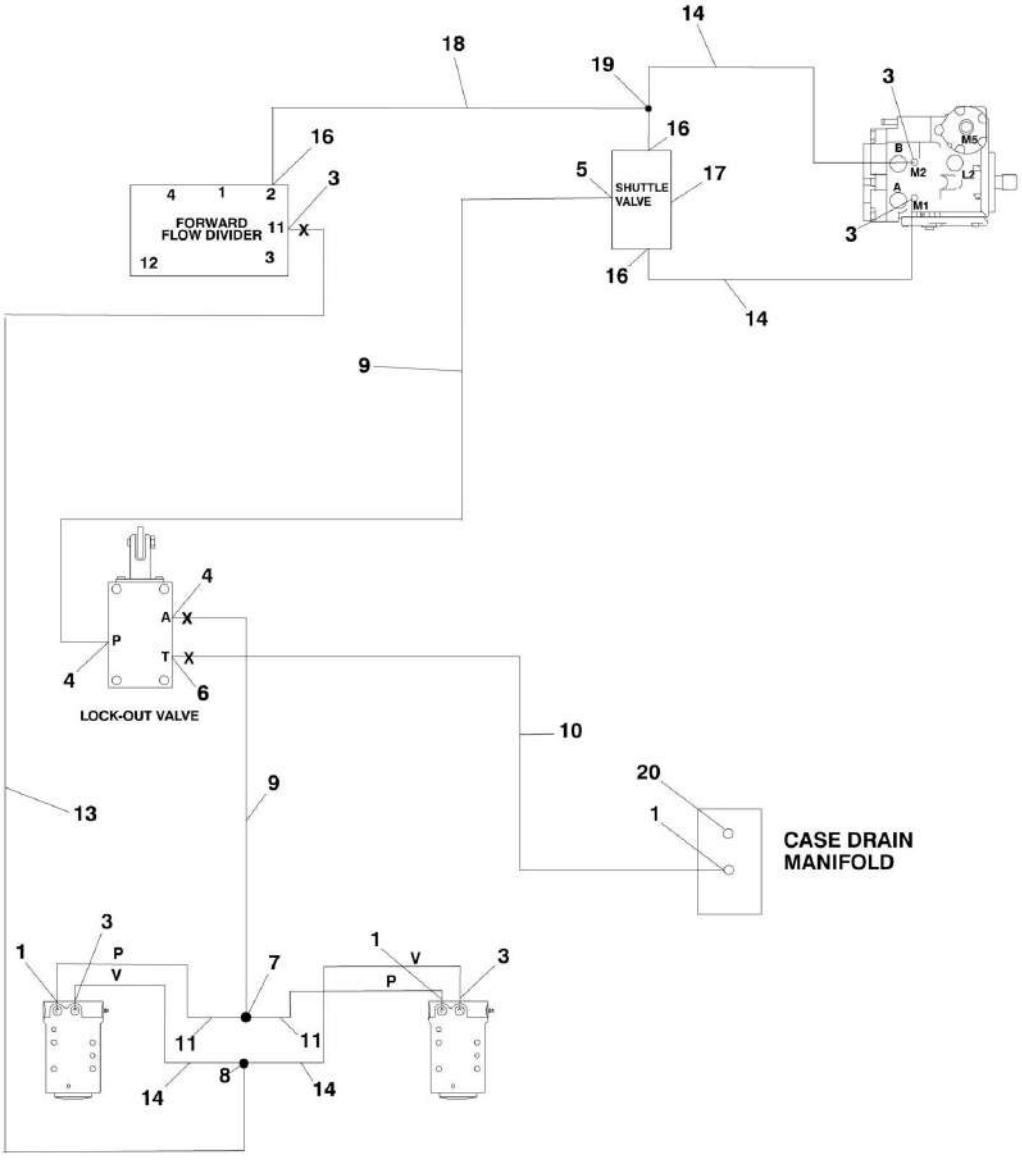

FIGURE 6-3. AXLE LOCKOUT HYDRAULIC DIAGRAM - 2WD (USA BUILT MACHINES AND BELGIUM BUILT MACHINES) (SN 0300107512 through 0300123999, SN 1300003222 through 1300006000)

ITEM	PART NUMBER	QTY	DESCRIPTION	REV
		Ref	**AXLE LOCKOUT HYDRAULIC DIAGRAM**	
	2792777	Ref	**2WD**	4
1	2110404	3	Fitting, Straight	
3	2110606	5	Fitting, Straight	
4	2130404	2	Fitting, Elbow	
5	1001098446	1	Fitting, Straight	
6	2150404	1	Fitting, Elbow	
7	2170504	1	Fitting, Tee	
8	2170506	1	Fitting, Tee	
9	2753782	2	Hose	
10	2753934	1	Hose	
11	2753939	2	Hose	
13	2754471	1	Hose	
14	2753625	4	Hose	
16	2130606	2	Fitting, Elbow	
17	8902175	1	Valve, Shuttle	
18	2753727	1	Hose	
19	2170306	2	Fitting, Tee	
20	2220235	1	Plug #4	

FIGURE 6-4. AXLE LOCKOUT HYDRAULIC DIAGRAM - 4WD (USA BUILT MACHINES AND BELGIUM BUILT MACHINES) (SN 0300065080 through 0300077284, Prior to SN 1300000353)

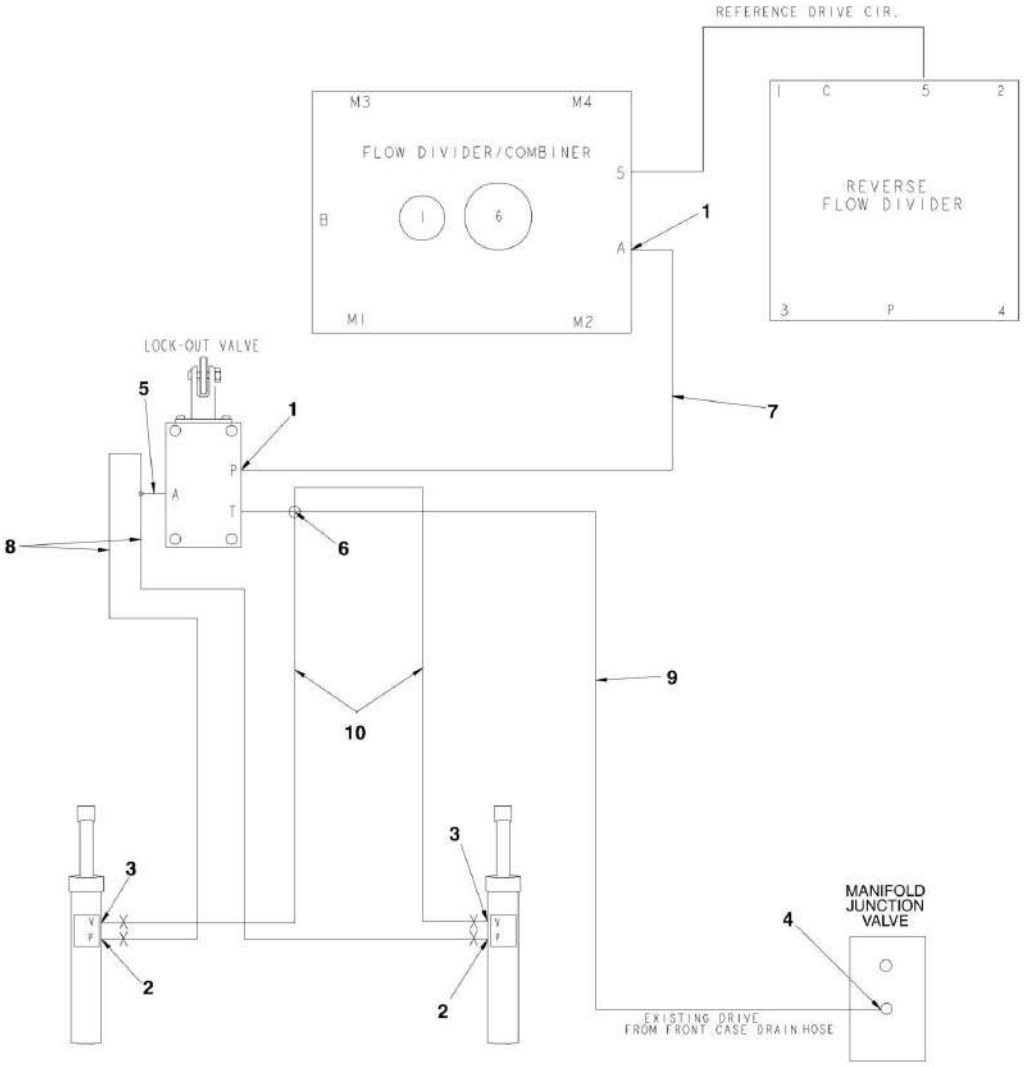

FIGURE 6-4. AXLE LOCKOUT HYDRAULIC DIAGRAM - 4WD (USA BUILT MACHINES AND BELGIUM BUILT MACHINES) (SN 0300065080 through 0300077284, Prior to SN 1300000353)

ITEM	PART NUMBER	QTY	DESCRIPTION	REV
		Ref	**AXLE LOCKOUT HYDRAULIC DIAGRAM**	
	2792474	Ref	**4WD**	1
1	2110404	2	Fitting, Fitting	
2	2110406	2	Fitting, Straight	
3	2110606	2	Fitting, Straight	
4	2130604	1	Fitting, Elbow	
5	2170404	1	Fitting, Tee	
6	2221083	1	Fitting, Cross	
7	2753540	1	Hose	
8	2753543	2	Hose	
9	2753576	1	Hose	
10	2753577	2	Hose	

FIGURE 6-5. AXLE LOCKOUT HYDRAULIC DIAGRAM - 4WD (USA BUILT MACHINES AND BELGIUM BUILT MACHINES) (SN 0300077285 through 0300107511, SN 1300000353 through 1300003221)

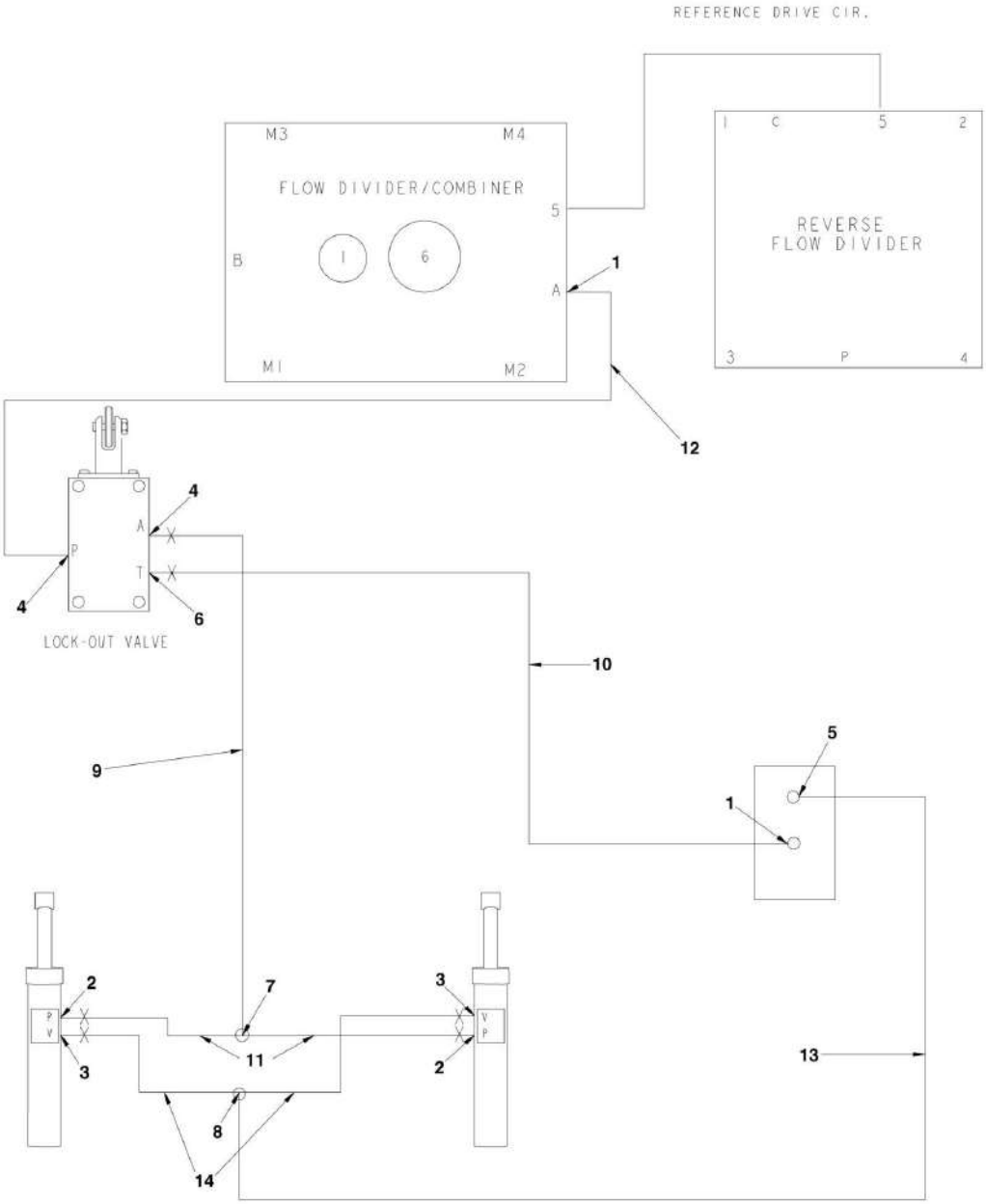

FIGURE 6-5. AXLE LOCKOUT HYDRAULIC DIAGRAM - 4WD (USA BUILT MACHINES AND BELGIUM BUILT MACHINES) (SN 0300077285 through 0300107511, SN 1300000353 through 1300003221)

ITEM	PART NUMBER	QTY	DESCRIPTION	REV
		Ref	**AXLE LOCKOUT HYDRAULIC DIAGRAM**	
	2792620	Ref	**4WD**	3
1	2110404	2	Fitting, Fitting	
2	2110406	2	Fitting, Straight	
3	2110606	2	Fitting, Straight	
4	2130404	2	Fitting, Elbow	
5	2130604	1	Fitting, Elbow	
6	2150404	1	Fitting, Elbow	
7	2170504	1	Fitting, Tee	
8	2170506	1	Fitting, Tee	
9	2753935	1	Hose	
10	2753934	1	Hose	
11	2753936	2	Hose	
12	2753937	1	Hose	
13	2753625	1	Hose	
14	2753577	2	Hose	

FIGURE 6-6. AXLE LOCKOUT HYDRAULIC DIAGRAM - 4WD (USA BUILT MACHINES AND BELGIUM BUILT MACHINES) (SN 0300107512 through 0300123999, SN 1300003222 through 1300006000)

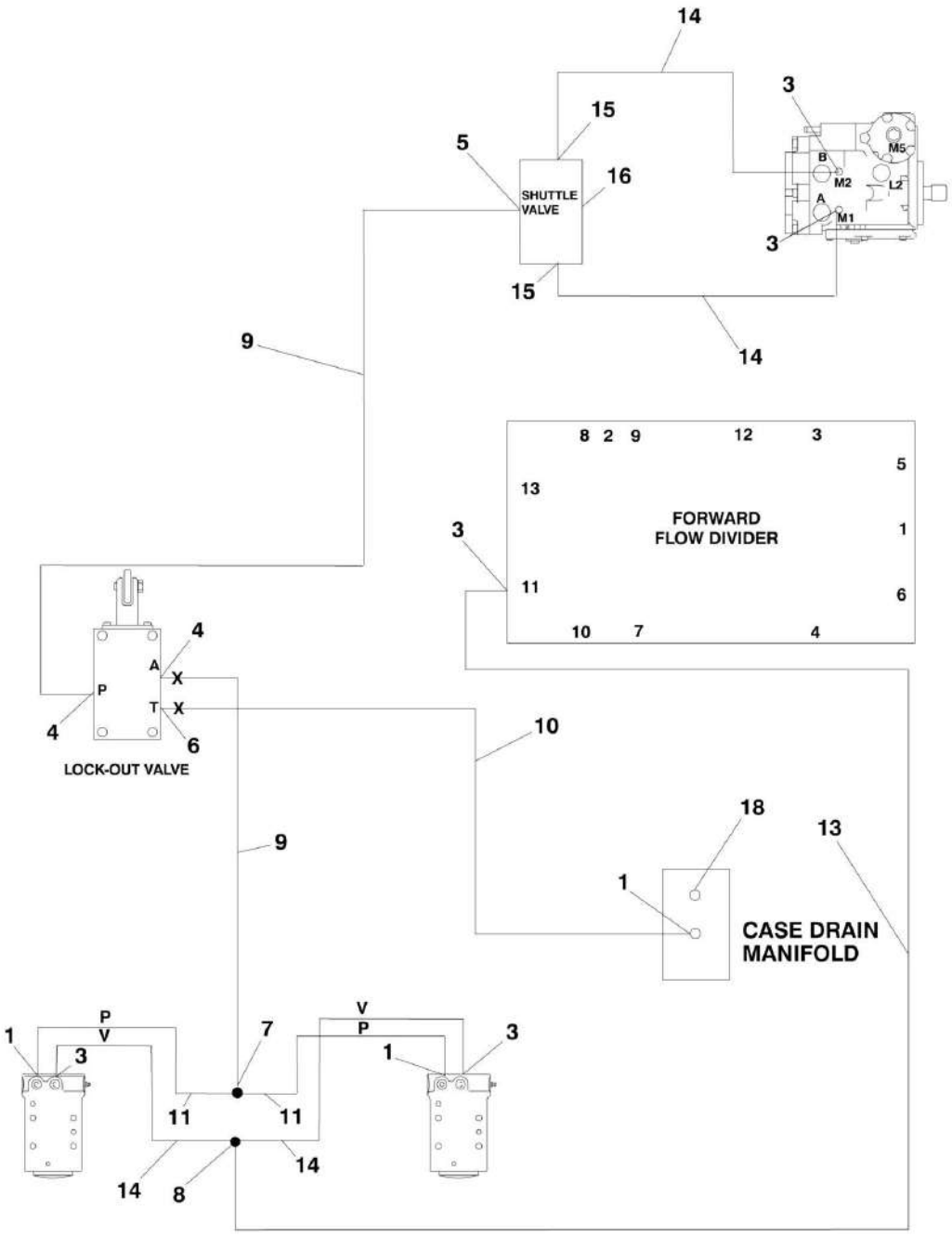

FIGURE 6-6. AXLE LOCKOUT HYDRAULIC DIAGRAM - 4WD (USA BUILT MACHINES AND BELGIUM BUILT MACHINES) (SN 0300107512 through 0300123999, SN 1300003222 through 1300006000)

ITEM	PART NUMBER	QTY	DESCRIPTION	REV
		Ref	**AXLE LOCKOUT HYDRAULIC DIAGRAM**	
	2792778	Ref	**4WD**	4
1	2110404	3	Fitting, Straight	
3	2110606	5	Fitting, Straight	
4	2130404	2	Fitting, Elbow	
5	1001098446	1	Fitting, Straight	
6	2150404	1	Fitting, Elbow	
7	2170504	1	Fitting, Tee	
8	2170506	1	Fitting, Tee	
9	2753782	2	Hose	
10	2753934	1	Hose	
11	2753939	2	Hose	
13	2753851	1	Hose	
14	2753625	4	Hose	
15	2130606	2	Fitting, Elbow	
16	8902175	1	Valve, Shuttle	
18	2220235	1	Plug	

FIGURE 6-7. DRIVE HYDRAULIC DIAGRAM - 2WD

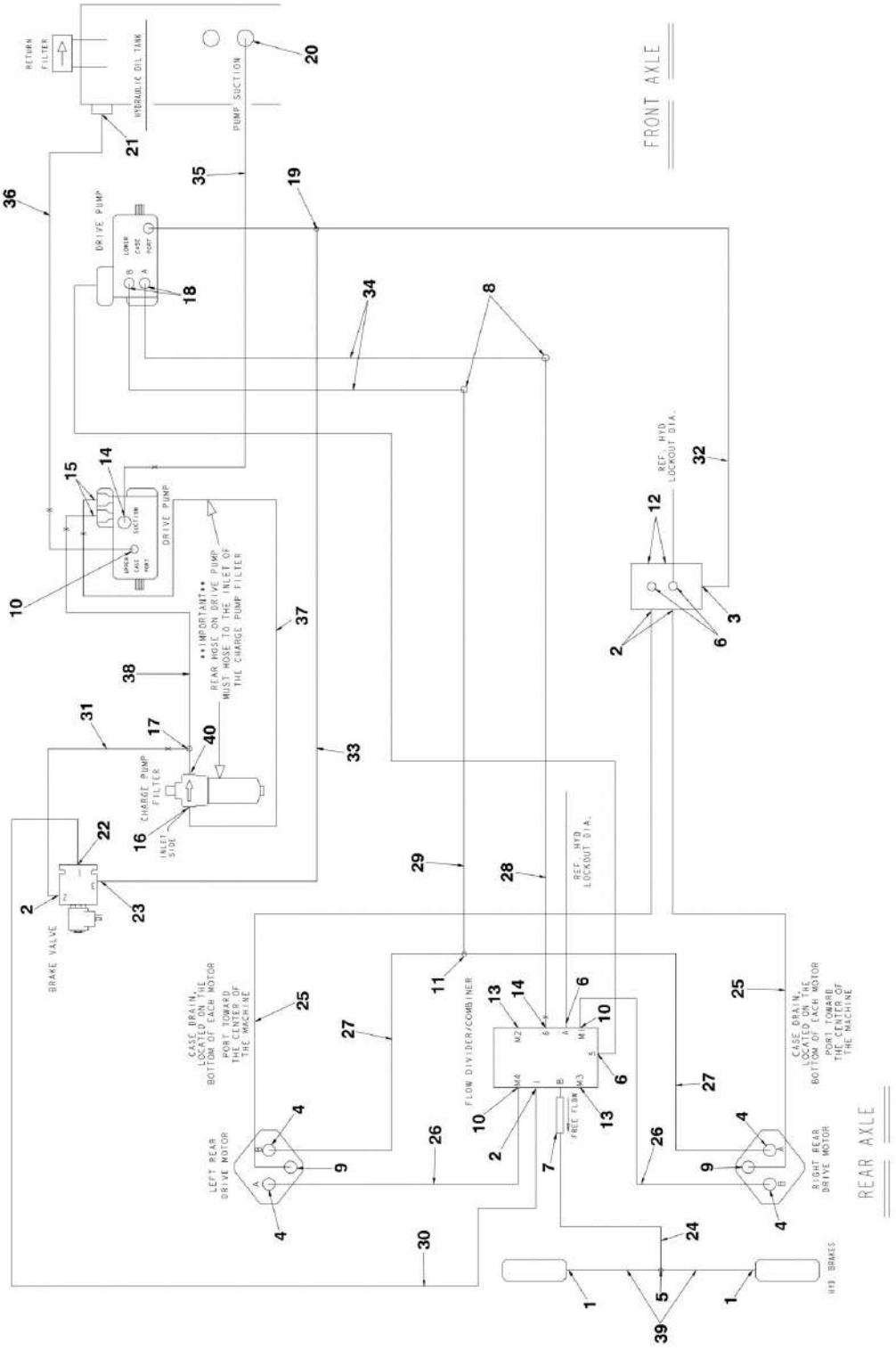

FIGURE 6-7. DRIVE HYDRAULIC DIAGRAM - 2WD

ITEM	PART NUMBER	QTY	DESCRIPTION	REV
		Ref	**DRIVE HYDRAULIC DIAGRAM - 2WD OPTIONS:**	
	2792470	Ref	**USA Built Machines (SN 0300065080 through 0300087630)**	6
	2792706	Ref	**USA Built Machines with Caterpillar/Deutz/Ford/Perkins Engines (SN 0300087631 through 0300100513)**	4
	DRIVE HYDRAULIC DIAGRAM - 2WD	Ref	**USA Built Machines with Caterpillar/Deutz/Ford/Perkins Engines (SN 0300100514 through 0300107512)**	
	DRIVE HYDRAULIC DIAGRAM - 2WD	Ref	**USA Built Machines with GM Engines (SN 0300065080 through 0300107511)**	
	DRIVE HYDRAULIC DIAGRAM - 2WD	Ref	**USA Built Machines with All Engines (SN 0300107512 through 0300123999)**	
	2792470	Ref	**Belgium Built Machines (Prior to SN 1300001158)**	6
	2792706	Ref	**Belgium Built Machines (SN 1300001158 through 1300002283)**	4
	DRIVE HYDRAULIC DIAGRAM - 2WD	Ref	**Belgium Built Machines (SN 1300002284 through 1300003221)**	
	DRIVE HYDRAULIC DIAGRAM - 2WD	Ref	**Belgium Built Machines (SN 1300003222 through 1300006000)**	
1	2130404	2	Fitting, Elbow	
2	2110808	AR	Fitting, Straight	
3	2130812	1	Fitting, Elbow	
4	2111212	4	Fitting, Straight	
5	2170504	1	Fitting, Tee	
6	2220235	4	Plug (USA Built Machines) **(SN 0300065080 through 0300087630)**	
6	2220235	4	Plug (Belgium Built Machines) **(Prior to SN 1300001158)**	
7	4641198	NLA	Valve, Check (Use p/n 4641281)	
8	2221087	2	Fitting, Elbow	
9	2110806	2	Fitting, Straight	
10	2131212	AR	Fitting, Elbow	
11	2170516	1	Fitting, Tee	
12	2220238	2	Plug	
13	2220240	2	Plug	
14	2111616	AR	Fitting, Straight	
15	2111010	AR	Fitting, Straight	
16		Ref	Fitting, Elbow Options:	
16	2131012	1	USA Built Machines **(SN 0300065080 through 0300087630)**	
16	2131012	1	Belgium Built Machines **(Prior to SN 1300001158)**	
16	2131008	1	USA Built Machines **(SN 0300087631 through 0300100514)**	
16	2131008	1	Belgium Built Machines **(SN 1300001158 through 1300002284)**	
17	2221088	1	Fitting, Tee	
18	2151616	AR	Fitting, Elbow	
19	2221084	AR	Fitting, Tee	
20	2111620	1	Fitting, Straight	
21	2131216	1	Fitting, Elbow	
22	2130808	1	Fitting, Elbow	
23	2130608	1	Fitting, Elbow	
24	2753538	1	Hose	

ITEM	PART NUMBER	QTY	DESCRIPTION	REV
25	2753579	2	Hose	
26	2753605	2	Hose	
27	2753909	2	Hose	
28	2753607	1	Hose	
29	2753608	1	Hose	
30	2753588	1	Hose	
31	2753587	1	Hose	
32	2753588	1	Hose	
33	2753575	1	Hose	
34	2753609	2	Hose	
35	2753610	1	Hose	
36	2753596	1	Hose	
37	2753592	1	Hose	
38	2753593	1	Hose	
39	2753940	2	Hose	
40	2221216	1	Fitting, Straight	

FIGURE 6-8. DRIVE HYDRAULIC DIAGRAM - 2WD

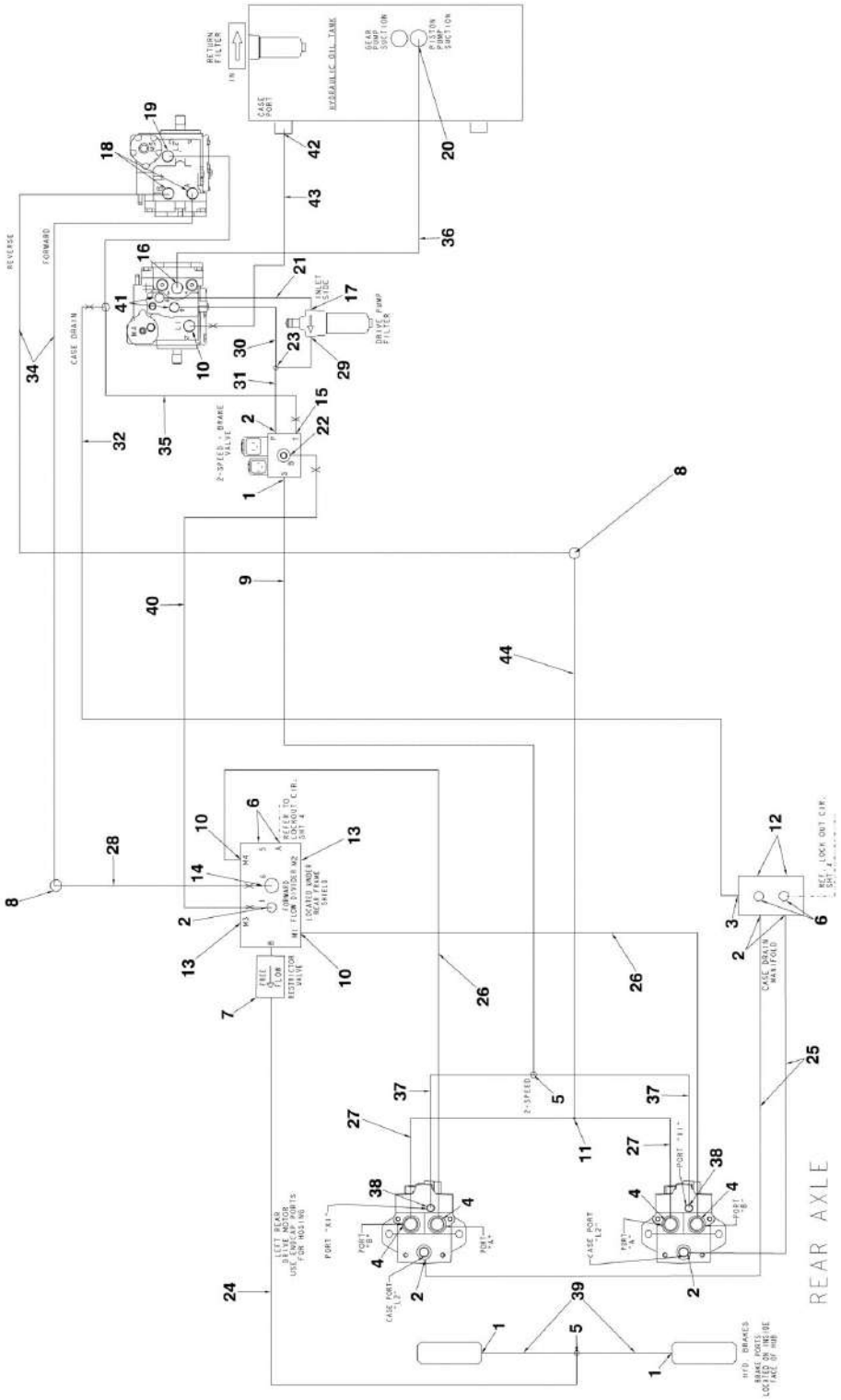

FIGURE 6-8. DRIVE HYDRAULIC DIAGRAM - 2WD

ITEM	PART NUMBER	QTY	DESCRIPTION	REV
		Ref	**DRIVE HYDRAULIC DIAGRAM - 2WD OPTIONS:**	
	DRIVE HYDRAULIC DIAGRAM - 2WD	Ref	**USA Built Machines (SN 0300065080 through 0300087630)**	
	DRIVE HYDRAULIC DIAGRAM - 2WD	Ref	**USA Built Machines with Caterpillar/Deutz/Ford/Perkins Engines (SN 0300087631 through 0300100513)**	
	2792753	Ref	**USA Built Machines with Caterpillar/Deutz/Ford/Perkins Engines (SN 0300100514 through 0300107512)**	5
	2792753	Ref	**USA Built Machines with GM Engines (SN 0300065080 through 0300107511)**	5
	DRIVE HYDRAULIC DIAGRAM - 2WD	Ref	**USA Built Machines with All Engines (SN 0300107512 through 0300123999)**	
	DRIVE HYDRAULIC DIAGRAM - 2WD	Ref	**Belgium Built Machines (Prior to SN 1300001158)**	
	DRIVE HYDRAULIC DIAGRAM - 2WD	Ref	**Belgium Built Machines (SN 1300001158 through 1300002283)**	
	2792753	Ref	**Belgium Built Machines (SN 1300002284 through 1300003221)**	5
	DRIVE HYDRAULIC DIAGRAM - 2WD	Ref	**Belgium Built Machines (SN 1300003222 through 1300006000)**	
1	2130404	3	Fitting, Elbow	
2	2110808	6	Fitting, Straight	
3	2130812	1	Fitting, Elbow	
4	2111212	4	Fitting, Straight	
5	2170504	2	Fitting, Tee	
6	Not Required	0	Plug	
7	4641281	1	Valve, Check	
8	2221087	2	Fitting, Elbow	
9	2753675	1	Hose	
10	2131212	2	Fitting, Elbow	
11	2170516	1	Fitting, Tee	
12	2220238	2	Plug	
13	2220240	2	Plug	
14	2111616	1	Fitting, Straight	
15	2110604	1	Fitting, Straight	
17	2131008	1	Fitting, Elbow	
18	2151612	2	Fitting, Elbow	
20	2111620	1	Fitting, Straight	
21	2753594	1	Hose	
22	2130808	1	Fitting, Elbow	
23	2221088	1	Fitting, Tee	
24	2753538	1	Hose	
25	2753579	2	Hose	
26	2753605	2	Hose	
27	2753909	2	Hose	
28	2753607	1	Hose	
29	2221216	1	Fitting, Straight	
30	2753595	1	Hose	
31	2753752	1	Hose	

ITEM	PART NUMBER	QTY	DESCRIPTION	REV
32	2753588	1	Hose	
34	2753609	2	Hose	
35	2753578	1	Hose	
36	2753610	1	Hose	
37	2753939	2	Hose	
38	2110406	2	Fitting, Straight	
39	2753940	2	Hose	
40	2753585	1	Hose	
42	2131216	1	Fitting, Elbow	
43	2753597	1	Hose	
44	2753608	1	Hose	

FIGURE 6-9. DRIVE HYDRAULIC DIAGRAM - 2WD

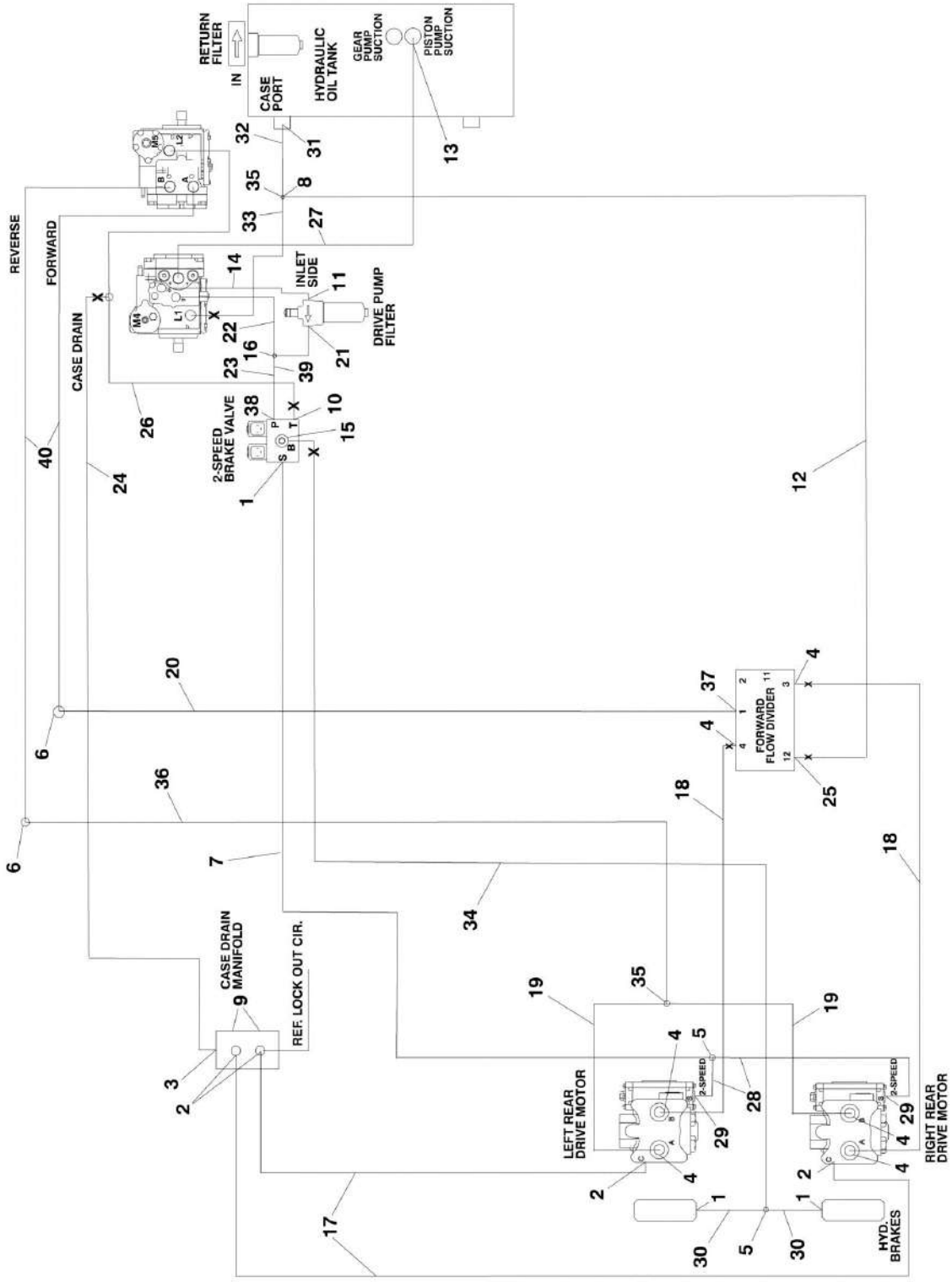

FIGURE 6-9. DRIVE HYDRAULIC DIAGRAM - 2WD

ITEM	PART NUMBER	QTY	DESCRIPTION	REV
		Ref	**DRIVE HYDRAULIC DIAGRAM - 2WD OPTIONS:**	
	DRIVE HYDRAULIC DIAGRAM - 2WD	Ref	**USA Built Machines (SN 0300065080 through 0300087630)**	
	DRIVE HYDRAULIC DIAGRAM - 2WD	Ref	**USA Built Machines with Caterpillar/Deutz/Ford/Perkins Engines (SN 0300087631 through 0300100513)**	
	DRIVE HYDRAULIC DIAGRAM - 2WD	Ref	**USA Built Machines with Caterpillar/Deutz/Ford/Perkins Engines (SN 0300107514 through 0300107512)**	
	DRIVE HYDRAULIC DIAGRAM - 2WD	Ref	**USA Built Machines with GM Engines (SN 0300065080 through 0300107511)**	
	2792785	Ref	**USA Built Machines with All Engines (SN 0300107512 through 0300123999)**	4
	DRIVE HYDRAULIC DIAGRAM - 2WD	Ref	**Belgium Built Machines (Prior to SN 1300001158)**	
	DRIVE HYDRAULIC DIAGRAM - 2WD	Ref	**Belgium Built Machines (SN 1300001158 through 1300002283)**	
	DRIVE HYDRAULIC DIAGRAM - 2WD	Ref	**Belgium Built Machines (SN 1300002284 through 1300003221)**	
	2792785	Ref	**Belgium Built Machines with All Engines (SN 1300003222 through 1300006000)**	4
1	2130404	3	Fitting, Elbow	
2	2110808	5	Fitting, Straight	
3	2130812	1	Fitting, Elbow	
4	2111212	6	Fitting, Straight	
5	2170504	2	Fitting, Tee	
6	2221085	2	Fitting, Elbow	
7	2753675	1	Hose	
8	2221296	1	Fitting, Straight	
9	2220238	2	Plug	
10	2110604	1	Fitting, Straight	
11	2131008	1	Fitting, Elbow	
12	2754471	1	Hose	
13	2111620	1	Fitting, Straight	
14	2753594	1	Hose	
15	4641281	1	Valve, Check	
16	2221088	1	Fitting, Tee	
17	2753579	2	Hose	
18	2753582	2	Hose	
19	2755076	2	Hose	
20	2753605	1	Hose	
21	2221216	1	Fitting, Straight	
22	2753595	1	Hose	
23	2753538	1	Hose	
24	2753588	1	Hose	
25	2110606	2	Fitting, Straight	
26	2753578	1	Hose	
27	2753610	1	Hose	

ITEM	PART NUMBER	QTY	DESCRIPTION	REV
28	2753939	2	Hose	
29	2110406	2	Fitting, Straight	
30	2753940	2	Hose	
31	2131216	1	Fitting, Elbow	
32	2753698	1	Hose	
33	2753843	1	Hose	
34	2753787	1	Hose	
35	2170512	2	Fitting, Tee	
36	2753688	1	Hose	
37	2111216	1	Fitting, Straight	
38	2110404	1	Fitting, Straight	
39	2221183	1	Fitting, Straight	
40	2753604	2	Hose	

FIGURE 6-10. DRIVE HYDRAULIC DIAGRAM - 4WD

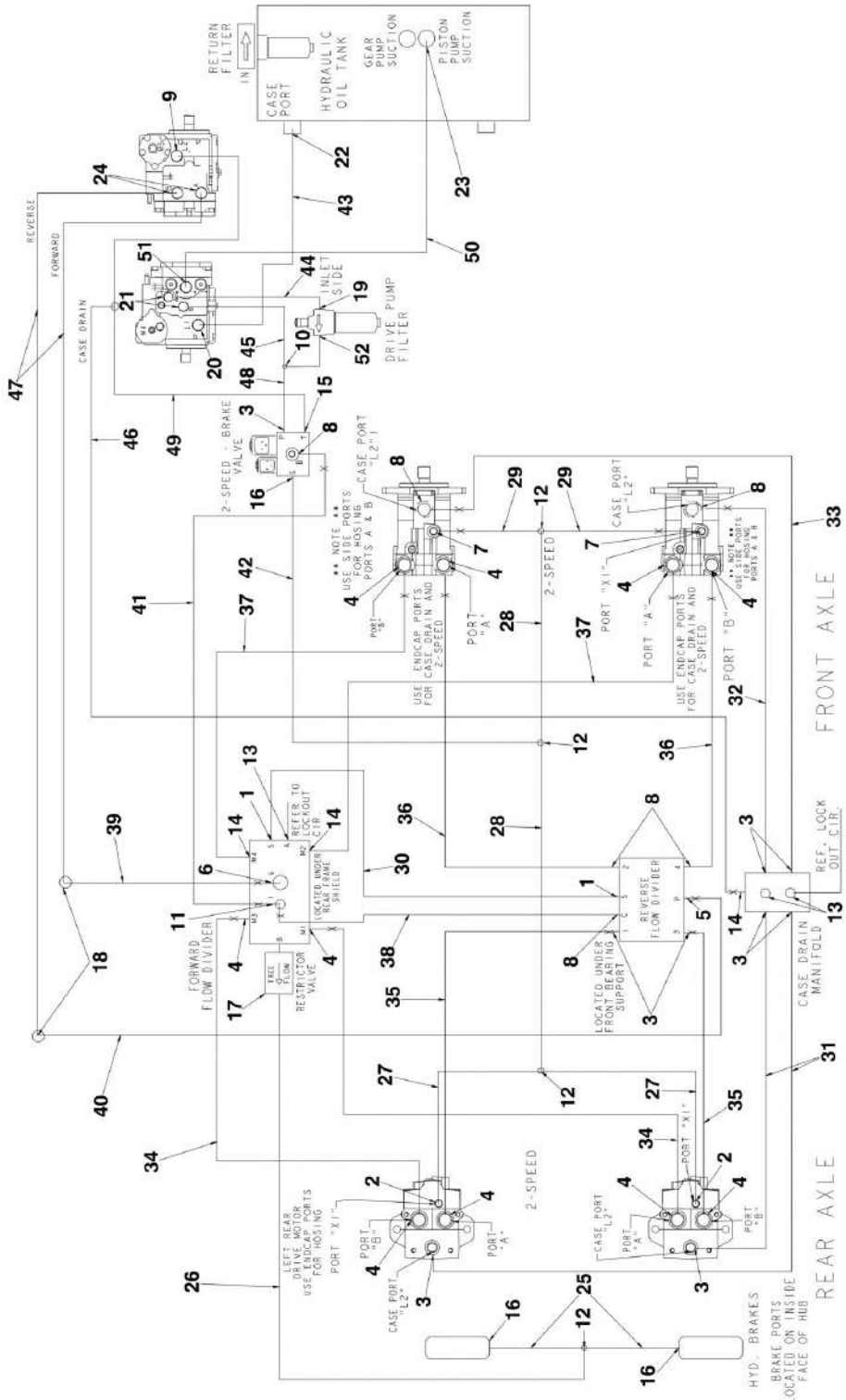

FIGURE 6-10. DRIVE HYDRAULIC DIAGRAM - 4WD

ITEM	PART NUMBER	QTY	DESCRIPTION	REV
		Ref	**DRIVE HYDRAULIC DIAGRAM - 4WD**	
	2792471	Ref	**USA Built Machines (SN 0300065080 through 0300087630)**	6
	2792708	Ref	**USA Built Machines with Caterpillar/Deutz/Ford/Perkins Engines (SN 0300087631 through 0300107511)**	4
	DRIVE HYDRAULIC DIAGRAM - 4WD	Ref	**USA Built Machines with Caterpillar/Deutz/Ford/Perkins Engines (SN 0300087512 through 0300123999)**	
	2792726	Ref	**USA Built Machines with GM Engines (SN 0300065080 through 0300107511)**	3
	DRIVE HYDRAULIC DIAGRAM - 4WD	Ref	**USA Built Machines to with GM Engines (SN 0300107512 through 0300123999)**	
	2792729	Ref	**USA Built Machines with Arctic Package (SN 0300065080 through 0300107511)**	2-B
	DRIVE HYDRAULIC DIAGRAM - 4WD	Ref	**USA Built Machines with Arctic Package (SN 0300107512 through 0300123999)**	
	2792471	Ref	**Belgium Built Machines (Prior to SN 1300001158)**	6
	2792708	Ref	**Belgium Built Machines (SN 1300001158 through 1300003221)**	4
	DRIVE HYDRAULIC DIAGRAM - 4WD	Ref	**Belgium Built Machines (SN 1300003222 through 1300006000)**	
1	2110404	2	Fitting, Straight	
2	2110406	2	Fitting, Straight	
3	2110808	9	Fitting, Straight	
4	2110812	10	Fitting, Straight	
5	2111212	1	Fitting, Straight	
6	2111216	1	Fitting, Straight	
7	2130406	2	Fitting, Elbow	
8	2130808	6	Fitting, Elbow	
9	2221084	AR	Fitting, Tee	
10	2221088	1	Fitting, Tee	
11	2170308	1	Fitting, Tee	
12	2170504	4	Fitting, Tee	
13	2220235	3	Plug (USA Built Machines) **(SN 0300065080 through 0300087630)**	
13	2220235	3	Plug (Belgium Built Machines) **(Prior to SN 1300001158)**	
14	2130812	3	Fitting, Elbow	
15	2110604	1	Fitting, Straight	
16	2130404	3	Fitting, Elbow	
17	4641198	NLA	Valve, Check (Use p/n 4641281)	
18	2221085	2	Fitting, Elbow	
19		Ref	Fitting, Elbow Options:	
19	2131012	1	USA Built Machines **(SN 0300065080 through 0300087630)**	
19	2131012	1	Belgium Built Machines **(Prior to SN 1300001158)**	
19	2131008	1	USA Built Machines **(SN 0300087631 through 0300123999)**	
19	2131008	1	Belgium Built Machines **(SN 1300001158 through 1300006000)**	
20	2131212	AR	Fitting, Elbow	
21	2111010	AR	Fitting, Straight	
22	2131216	2	Fitting, Straight	
23	2111620	1	Fitting, Straight	

ITEM	PART NUMBER	QTY	DESCRIPTION	REV
24	2151212	AR	Fitting, Elbow	
25	2753940	2	Hose	
26	2753538	1	Hose	
27	2753939	2	Hose	
28	2753540	2	Hose	
29		Ref	Hose Options:	
29	2753541	2	Hose (Without Arctic Package)	
29	2754722	2	Hose (With Arctic Package)	
30	2753542	1	Hose	
31	2753579	2	Hose	
32		Ref	Hose Options:	
32	2753580	1	Hose (Without Arctic Package)	
32	2754723	1	Hose (With Arctic Package)	
33		Ref	Hose Options:	
33	2753581	1	Hose (Without Arctic Package)	
33	2754724	1	Hose (With Arctic Package)	
34	2753598	2	Hose	
35	2753599	2	Hose	
36		Ref	Hose Options:	
36	2753600	2	Hose (Without Arctic Package)	
36	2754725	2	Hose (With Arctic Package)	
37		Ref	Hose Options:	
37	2753601	2	Hose (Without Arctic Package)	
37	2754726	2	Hose (With Arctic Package)	
38	2753582	1	Hose	
39	2753602	1	Hose	
40	2753603	1	Hose	
41	2753585	1	Hose	
42	2753555	1	Hose	
43	2753597	1	Hose	
44	2753594	1	Hose	
45		Ref	Hose Options:	
45	2753595	1	Hose (Caterpillar/Deutz/Ford/Perkins Engines)	
45	2753661	1	Hose (GM Engines)	
46	2753588	1	Hose	
47	2753604	2	Hose	
48		Ref	Hose Options:	
48	2753584	1	Hose (Caterpillar/Deutz/Ford/Perkins Engines)	
48	2753752	1	Hose (GM Engines)	
49	2753578	1	Hose	
50	2753610	1	Hose	
51	2111612	1	Fitting, Straight (USA Built Machines) **(SN 0300065080 through 0300092804)**	
51	2111612	1	Fitting, Straight (Belgium Built Machines) **(Prior to SN 1300001787)**	
52	2221216	1	Fitting Straight (USA Built Machines) **(SN 0300087631 through 0300123999)**	
52	2221216	1	Fitting, Straight (Belgium Built Machines) **(SN 1300001158 through 1300006000)**	

FIGURE 6-11. DRIVE HYDRAULIC DIAGRAM - 4WD

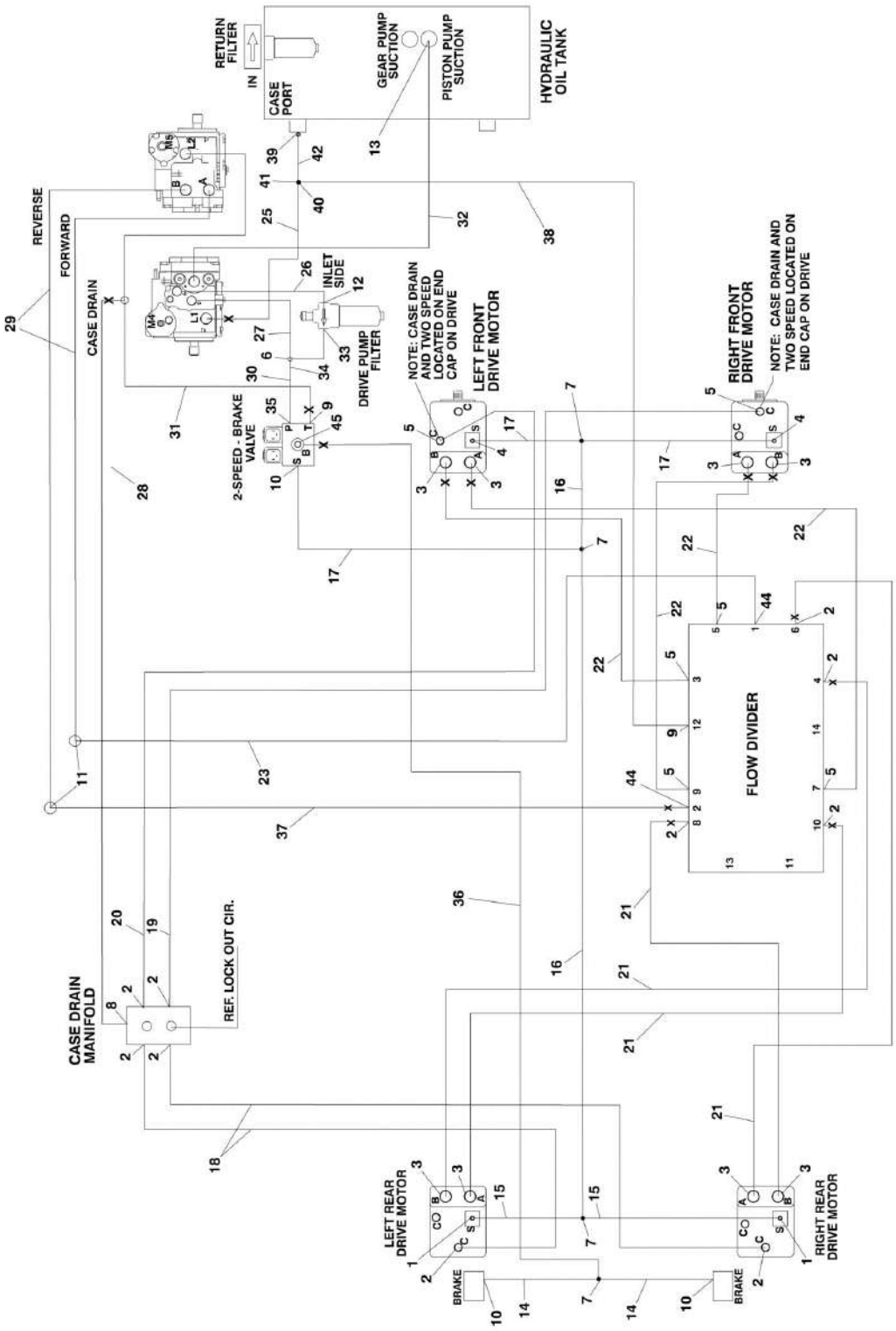

FIGURE 6-11. DRIVE HYDRAULIC DIAGRAM - 4WD

ITEM	PART NUMBER	QTY	DESCRIPTION	REV
		Ref	**DRIVE HYDRAULIC DIAGRAM - 4WD**	
	DRIVE HYDRAULIC DIAGRAM - 4WD	Ref	**USA Built Machines (SN 0300065080 through 0300087630)**	
	DRIVE HYDRAULIC DIAGRAM - 4WD	Ref	**USA Built Machines with Caterpillar/Deutz/Ford/Perkins Engines (SN 0300087631 through 0300107511)**	
	2792782	Ref	**USA Built Machines with Caterpillar/Deutz/Ford/Perkins Engines (SN 0300107512 through 0300123999)**	4
	DRIVE HYDRAULIC DIAGRAM - 4WD	Ref	**USA Built Machines with GM Engines (SN 0300065080 through 0300107511)**	
	2792783	Ref	**USA Built Machines with GM Engines (SN 0300107512 through 0300123999)**	3
	DRIVE HYDRAULIC DIAGRAM - 4WD	Ref	**USA Built Machines with Arctic Package (SN 0300065080 through 0300107511)**	
	1001094337	Ref	**USA Built Machines with Arctic Package (SN 0300107512 through 0300123999)**	A-1
	DRIVE HYDRAULIC DIAGRAM - 4WD	Ref	**Belgium Built Machines (Prior to SN 1300001158)**	
	DRIVE HYDRAULIC DIAGRAM - 4WD	Ref	**Belgium Built Machines (SN 1300001158 through 1300003221)**	
	2792782	Ref	**Belgium Built Machines (SN 1300003222 through 1300006000)**	4
1	2110406	2	Fitting, Straight	
2	2110808	10	Fitting, Straight	
3	2110812	8	Fitting, Straight	
4	2130406	2	Fitting, Elbow	
5	2130808	6	Fitting, Elbow	
6	2221088	1	Fitting, Tee	
7	2170504	4	Fitting, Tee	
8	2130812	1	Fitting, Elbow	
9	2110604	2	Fitting, Straight	
10	2130404	3	Fitting, Elbow	
11	2221085	2	Fitting, Elbow	
12	2131008	1	Fitting, Elbow	
13	2111620	1	Fitting, Straight	
14	2753940	2	Hose	
15	2753939	2	Hose	
16	2753540	2	Hose	
17		Ref	Hose Options:	
17	2753541	3	Hose (Without Arctic Package)	
17	2754722	3	Hose (With Arctic Package)	
18	2753579	2	Hose	
19	2753580	1	Hose	
20	2753581	1	Hose	
21	2754244	4	Hose	
22		Ref	Hose Options:	
22	2753601	4	Hose (Without Arctic Package)	
22	2754726	4	Hose (With Arctic Package)	
23	2753605	1	Hose	

ITEM	PART NUMBER	QTY	DESCRIPTION	REV
25	2753843	1	Hose	
26	2753594	1	Hose	
27		Ref	Hose Options:	
27	2753595	1	Hose (Caterpillar/Deutz/Perkins Engines)	
27	2753661	1	Hose (GM Engines)	
28	2753588	1	Hose	
29	2753604	2	Hose	
30		Ref	Hose Options:	
30	2753538	1	Hose (Caterpillar/Deutz/Perkins Engines)	
30	2753537	1	Hose (GM Engines)	
31	2753578	1	Hose	
32	2753610	1	Hose	
33	2221216	1	Fitting, Straight	
34	2221183	1	Fitting, Straight	
35	2110404	1	Fitting, Straight	
36	2753787	1	Hose	
37	2753602	1	Hose	
38	2754471	1	Hose	
39	2131216	1	Fitting, Elbow	
40	2221296	1	Fitting, Straight	
41	2170512	1	Fitting, Tee	
42	2753698	1	Hose	
44	2111212	2	Fitting, Straight	
45	4641281	1	Valve, Check	

FIGURE 6-12. STANDARD HYDRAULIC DIAGRAM

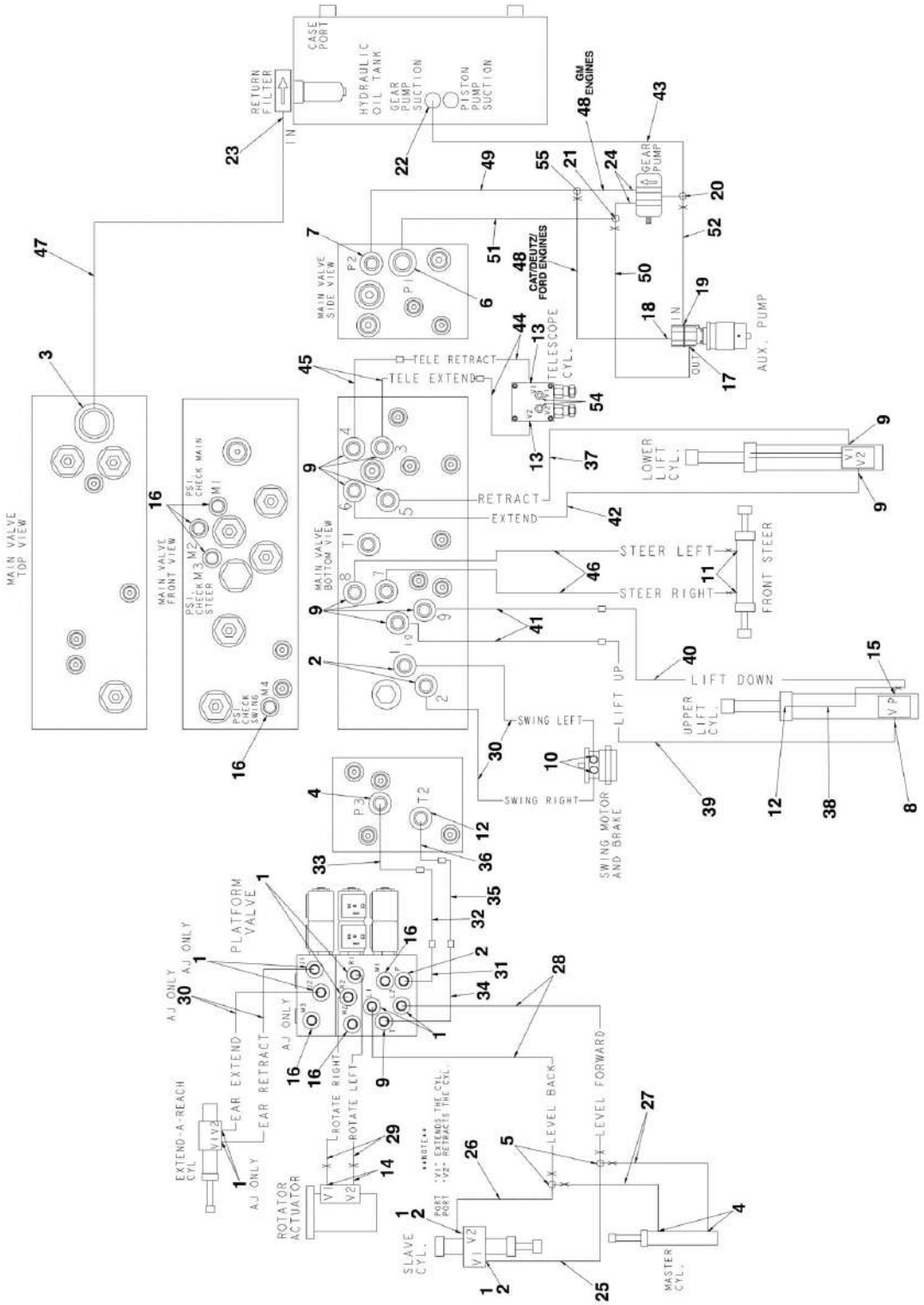

FIGURE 6-12. STANDARD HYDRAULIC DIAGRAM

ITEM	PART NUMBER	QTY	DESCRIPTION	REV
		Ref	**STANDARD HYDRAULIC DIAGRAM**	
	2792468	Ref	**450A Series II (USA Built Machines with Caterpillar/Deutz/Ford/Perkins Engines) (1st SN Digit is 0)**	6
	2792724	Ref	**450A Series II (USA Built Machines with GM Engines) (SN 0300093402 through 0300123999)**	4
	2792469	Ref	**450AJ Series II (USA Built Machines with Caterpillar/Deutz/Ford/Perkins Engines) (1st SN Digit is 0)**	5
	2792725	Ref	**450AJ Series II (USA Built Machines with GM Engines) (SN 0300093402 through 0300123999)**	4
	2792580	Ref	**Turntable Hydraulic Diagram (Belgium Built Machines) (1st SN Digit is 1)**	6
	2792590	Ref	**Main Boom Hydraulic Diagram (Belgium Built Machines) (1st SN Digit is 1)**	2
	2792583	Ref	**Tower Boom Hydraulic Diagram (Belgium Built Machines) (1st SN Digit is 1)**	1
1	2110404	AR	Fitting, Straight	
2	2110406	5	Fitting, Straight	
3	2111212	1	Fitting, Straight	
4	2130406	3	Fitting, Elbow	
5	2170504	2	Fitting, Tee	
6	2150808	1	Fitting, Elbow	
7	2150606	1	Fitting, Elbow	
8	2170206	1	Fitting, Long Elbow	
9	2110606	11	Fitting, Straight	
10	2110410	2	Fitting, Straight	
11	2170106	2	Fitting, Long Straight	
12	2130606	2	Fitting, Elbow	
13	2130608	2	Fitting, Elbow (USA Built Machines Only)	
14	2150404	2	Fitting, Elbow	
15	2170406	1	Fitting, Tee	
16	2221086	AR	Fitting, Pressure, Check	
17		Ref	Fitting Options:	
17	2130604	1	Fitting, Elbow	
17	2110604	1	Fitting, Straight	
18	2110604	1	Fitting, Straight	
19	2131210	1	Fitting, Elbow	
20	2170316	1	Fitting, Tee	
21	2170808	1	Fitting, Tee	
22	2111620	1	Fitting, Straight	
23	2111216	1	Fitting, Straight	
24	4641199	2	Valve, Check	
25		Ref	Hose Options:	
25	2753554	1	Hose (46in - USA Built Machines)	
25	2753545	1	Hose (34in - USA Built Machines)	
25	2753546	1	Hose (Belgium Built Machines)	
26		Ref	Hose Options:	
26	2753542	1	Hose (450A Series II)	
26	2753546	1	Hose (450AJ Series II)	
27		Ref	Hose Options:	
27	2753558	2	Hose (450A Series II)	
27	2753547	2	Hose (450AJ Series II)	

ITEM	PART NUMBER	QTY	DESCRIPTION	REV
28		Ref	Hose Options:	
28	2753549	2	Hose (450A Series II)	
28	2753548	2	Hose (450AJ Series II)	
29	2753557	2	Hose	
30		Ref	Hose Options:	
30	2753550	2	Hose (66in Length)	
30	2753675	2	Hose (84in Length)	
31		Ref	Hose Options:	
31	2753556	1	Hose (450A Series II)	
31	2753551	1	Hose (450AJ Series II)	
32	2753552	1	Hose	
33	2753553	1	Hose	
34		Ref	Hose Options:	
34	2753559	1	Hose (450A Series II)	
34	2753560	1	Hose (450AJ Series II)	
35	2753561	1	Hose	
36	2753562	1	Hose	
37	2753563	1	Hose	
38		Ref	Tube Options:	
38	4568281	1	Tube (450A Series II)	
38	4568280	1	Tube (450AJ Series II)	
39	2753565	1	Hose	
40	2753566	1	Hose	
41	2753567	2	Hose	
42	2753568	1	Hose	
43		Ref	Hose Options:	
43	2753611	1	Hose (111in Length) (Belgium Built Machines)	
43	2753612	1	Hose (98in Length) (USA Built Machines)	
44	2753569	2	Hose	
45	2753570	2	Hose	
46		Ref	Hose Options:	
46	2753571	2	USA Built Machines **(SN 0300065080 through 0300091060)**	
46	2753571	2	Belgium Built Machines **(Prior to SN 1300001242)**	
46	2754702	2	USA Built Machines **(SN 0300091061 through 0300123999)**	
46	2754702	2	Belgium Built Machines **(SN 1300001242 through 1300006000)**	
47	2753613	1	Hose	
48	2753572	1	Hose	
49		Ref	Hose Options:	
49	2753573	1	Hose (77in Length)	
49	2753574	1	Hose (71in Length)	
49	2753563	1	Hose (68in Length)	
50	2753589	1	Hose	
51		Ref	Hose Options:	
51	2753590	1	Hose (77in Length)	
51	2753591	1	Hose (71in Length)	
52	2753614	1	Hose	
53	1705091	1	Decal, Hose Tags (Not Shown)	
54	2130606	2	Fitting, Elbow (Belgium Built Machines Only)	
55		Ref	Fitting, Tee Options:	
55	2170808	1	Caterpillar/Deutz/Ford/Perkins Engines	
55	2170706	1	GM Engines	

FIGURE 6-13. TOW BAR HYDRAULIC DIAGRAM

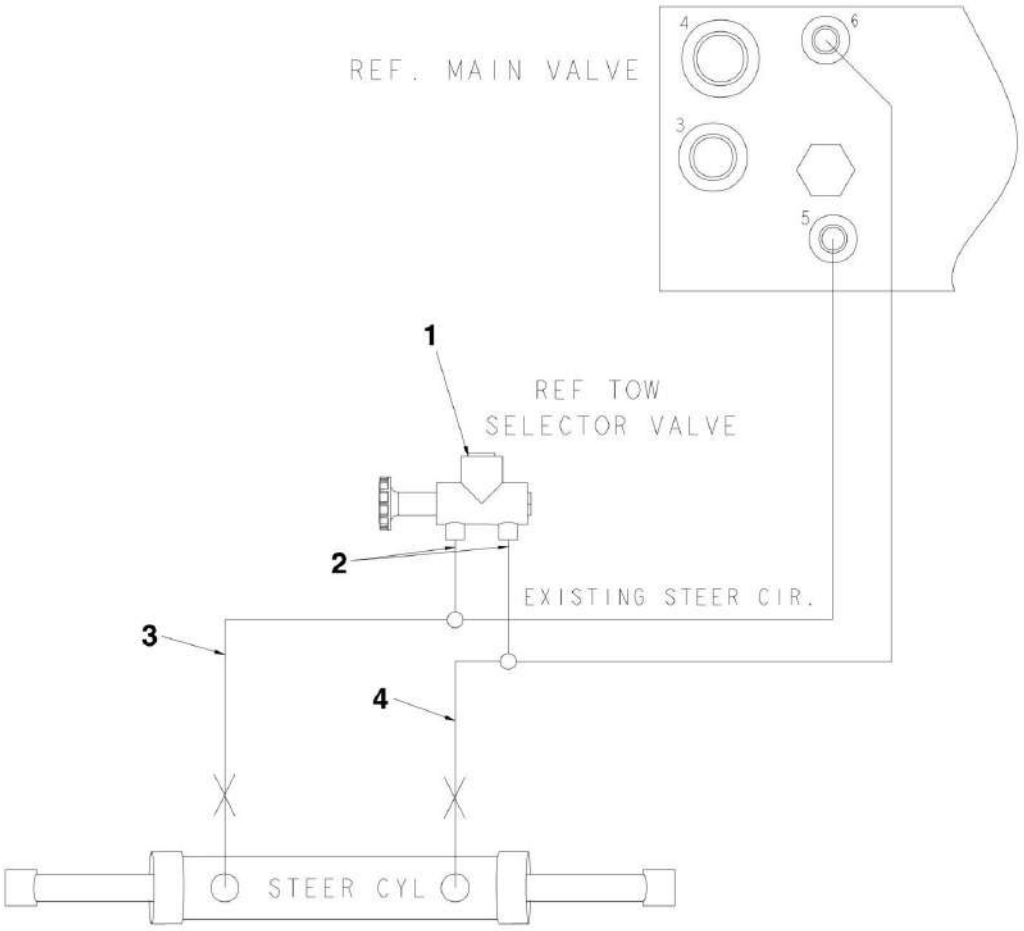

FIGURE 6-13. TOW BAR HYDRAULIC DIAGRAM

ITEM	PART NUMBER	QTY	DESCRIPTION	REV
	2792473	Ref	**TOW BAR HYDRAULIC DIAGRAM**	
1	2220240	1	Plug	
2	2221090	2	Fitting, Tee	
3	2753615	1	Hose	
4	2753616	1	Hose	

FIGURE 6-14. HYDRAULIC DIAGRAM LIST

ITEM	PART NUMBER	QTY	DESCRIPTION	REV
		Ref	**Note: Information on diagrams not shown is available from JLG Customer Service Department.**	Ref
		Ref	**Axle Lockout Hydraulic Diagrams:**	
		Ref	2WD Machines	
		Ref	USA Built Machines	
	2792472	Ref	USA Built Machines **(SN 0300065080 through 0300077284)**	
	1283245	Ref	USA Built Machines **(SN 0300065080 through 0300077284)**	
	2792619	Ref	USA Built Machines **(SN 0300077285 through 0300107511)**	
	1283373	Ref	USA Built Machines **(SN 0300077285 through 0300107511)**	
	2792777	Ref	USA Built Machines **(SN 0300107512 through 0300123999)**	
	1283460	Ref	USA Built Machines **(SN 0300107512 through 0300123999)**	
		Ref	Belgium Built Machines	
	2792472	Ref	Belgium Built Machines **(Prior to SN 1300000353)**	
	1283245	Ref	Belgium Built Machines **(Prior to SN 1300000353)**	
	2792619	Ref	Belgium Built Machines **(SN 1300000353 through 1300003221)**	
	1283373	Ref	Belgium Built Machines **(SN 1300000353 through 1300003221)**	
	2792777	Ref	Belgium Built Machines **(SN 1300003222 through 1300006000)**	
	1283460	Ref	Belgium Built Machines **(SN 1300003222 through 1300006000)**	
		Ref	4WD Machines	
		Ref	USA Built Machines	
	2792474	Ref	USA Built Machines **(SN 0300065080 through 0300077284)**	
	1283245	Ref	USA Built Machines **(SN 0300065080 through 0300077284)**	
	2792620	Ref	USA Built Machines **(SN 0300077285 through 0300107511)**	
	1283373	Ref	USA Built Machines **(SN 0300077285 through 0300107511)**	
	2792778	Ref	USA Built Machines **(SN 0300107512 through 0300123999)**	
	1283460	Ref	USA Built Machines **(SN 0300107512 through 0300123999)**	
		Ref	Belgium Built Machines	
	2792474	Ref	Belgium Built Machines **(Prior to SN 1300000353)**	
	1283245	Ref	Belgium Built Machines **(Prior to SN 1300000353)**	
	2792620	Ref	Belgium Built Machines **(SN 1300000353 through 1300003221)**	
	1283373	Ref	Belgium Built Machines **(SN 1300000353 through 1300003221)**	
	2792778	Ref	Belgium Built Machines **(SN 1300003222 through 1300006000)**	
	1283460	Ref	Belgium Built Machines **(SN 1300003222 through 1300006000)**	
		Ref	**Axle Fixed Hydraulic Diagrams:**	
		Ref	2WD Machines	
		Ref	USA Built Machines	
	Not Required	Ref	USA Built Machines **(SN 0300065080 through 0300107511)**	
	2792779	Ref	USA Built Machines **(SN 0300107512 through 0300123999)**	
	1283460	Ref	USA Built Machines **(SN 0300107512 through 0300123999)**	
		Ref	Belgium Built Machines	
	Not Required	Ref	Belgium Built Machines **(Prior to SN 1300003222)**	
	2792779	Ref	Belgium Built Machines **(SN 1300003222 through 1300006000)**	

ITEM	PART NUMBER	QTY	DESCRIPTION	REV
	1283460	Ref	Belgium Built Machines **(SN 1300003222 through 1300006000)**	
		Ref	4WD Machines	
		Ref	USA Built Machines	
	Not Required	Ref	USA Built Machines **(SN 0300065080 through 0300107511)**	
	2792784	Ref	USA Built Machines **(SN 0300107512 through 0300123999)**	
	1283460	Ref	USA Built Machines **(SN 0300107512 through 0300123999)**	
		Ref	Belgium Built Machines	
	Not Required	Ref	Belgium Built Machines **(Prior to SN 1300003222)**	
	2792784	Ref	Belgium Built Machines **(SN 1300003222 through 1300006000)**	
	1283460	Ref	Belgium Built Machines **(SN 1300003222 through 1300006000)**	
	2792590	Ref	**Boom (Main) Hydraulic Diagram (Belgium Built Machines)**	
	1283373	Ref	**Boom (Main) Hydraulic Diagram (Belgium Built Machines)**	
	2792583	Ref	**Boom (Tower) Hydraulic Diagram (Belgium Built Machines)**	
	1283373	Ref	**Boom (Tower) Hydraulic Diagram (Belgium Built Machines)**	
		Ref	**Drive Hydraulic Diagrams:**	
		Ref	2WD Machines	
	2792470	Ref	USA Built Machines with Caterpillar/Deutz/Ford/Perkins Engines **(SN 0300065080 through 0300087630)**	
	1283245	Ref	USA Built Machines with Caterpillar/Deutz/Ford/Perkins Engines **(SN 0300065080 through 0300087630)**	
	2792706	Ref	USA Built Machines with Caterpillar/Deutz/Ford/Perkins Engines **(SN 0300087631 through 0300100513)**	
	1283373	Ref	USA Built Machines with Caterpillar/Deutz/Ford/Perkins Engines **(SN 0300087631 through 0300100513)**	
	2792753	Ref	USA Built Machines with Caterpillar/Deutz/Ford/Perkins Engines **(SN 0300100514 through 0300107512)**	
	1283373	Ref	USA Built Machines with Caterpillar/Deutz/Ford/Perkins Engines **(SN 0300100514 through 0300107512)**	
	2792753	Ref	USA Built Machines with GM Engines	
	1283373	Ref	USA Built Machines with GM Engines	
	2792785	Ref	USA Built Machines with All Engines **(SN 0300107512 through 0300123999)**	
	1283460	Ref	USA Built Machines with All Engines **(SN 0300107512 through 0300123999)**	
	2792470	Ref	Belgium Built Machines **(Prior to SN 1300001158)**	
	1283245	Ref	Belgium Built Machines **(Prior to SN 1300001158)**	
	2792706	Ref	Belgium Built Machines **(SN 1300001158 through 1300002283)**	
	1283373	Ref	Belgium Built Machines **(SN 1300001158 through 1300002283)**	
	2792753	Ref	Belgium Built Machines **(SN 1300002284 through 1300003221)**	
	1283373	Ref	Belgium Built Machines **(SN 1300002284 through 1300003221)**	
	2792785	Ref	Belgium Built Machines **(SN 1300003222 through 1300006000)**	
	1283460	Ref	Belgium Built Machines **(SN 1300003222 through 1300006000)**	
		Ref	4WD Machines	
	2792471	Ref	USA Built Machines **(SN 0300065080 through 0300087630)**	
	1283245	Ref	USA Built Machines **(SN 0300065080 through 0300087630)**	
	2792708	Ref	USA Built Machines with Caterpillar/Deutz/Ford/Perkins	

ITEM	PART NUMBER	QTY	DESCRIPTION	REV
			Engines **(SN 0300087631 through 0300107511)**	
	1283373	Ref	USA Built Machines with Caterpillar/Deutz/Ford/Perkins Engines **(SN 0300087631 through 0300107511)**	
	2792782	Ref	USA Built Machines to with Caterpillar/Deutz/Ford/Perkins Engines **(SN 0300107512 through 0300123999)**	
	1283460	Ref	USA Built Machines to with Caterpillar/Deutz/Ford/Perkins Engines **(SN 0300107512 through 0300123999)**	
	2792726	Ref	USA Built Machines with GM Engines **(SN 0300065080 through 0300107511)**	
	1283373	Ref	USA Built Machines with GM Engines **(SN 0300065080 through 0300107511)**	
	2792783	Ref	USA Built Machines to with GM Engines **(SN 0300107512 through 0300123999)**	
	1283460	Ref	USA Built Machines to with GM Engines **(SN 0300107512 through 0300123999)**	
	2792729	Ref	USA Built Machines with Arctic Package **(SN 0300065080 through 0300107511)**	
	1283373	Ref	USA Built Machines with Arctic Package **(SN 0300065080 through 0300107511)**	
	1001094337	Ref	USA Built Machines with Arctic Package **(SN 0300107512 through 0300123999)**	
	1283460	Ref	USA Built Machines with Arctic Package **(SN 0300107512 through 0300123999)**	
	2792471	Ref	Belgium Built Machines **(Prior to SN 1300001158)**	
	1283245	Ref	Belgium Built Machines **(Prior to SN 1300001158)**	
	2792708	Ref	Belgium Built Machines **(SN 1300001158 through 1300003221)**	
	1283373	Ref	Belgium Built Machines **(SN 1300001158 through 1300003221)**	
	2792782	Ref	Belgium Built Machines **(SN 1300003222 through 1300006000)**	
	1283460	Ref	Belgium Built Machines **(SN 1300003222 through 1300006000)**	
		Ref	**Standard Hydraulic Diagrams:**	
	2792468	Ref	450A Series II (USA Built Machines with Caterpillar/Deutz/Ford/ Perkins Engines)	
	1283373	Ref	450A Series II (USA Built Machines with Caterpillar/Deutz/Ford/ Perkins Engines)	
	1283460	Ref	450A Series II (USA Built Machines with Caterpillar/Deutz/Ford/ Perkins Engines)	
	2792724	Ref	450A Series II (USA Built Machines with GM Engines)	
	1283373	Ref	450A Series II (USA Built Machines with GM Engines)	
	1283460	Ref	450A Series II (USA Built Machines with GM Engines)	
	2792469	Ref	450AJ Series II (USA Built Machines with Caterpillar/Deutz/Ford/Perkins Engines)	
	1283373	Ref	450AJ Series II (USA Built Machines with Caterpillar/Deutz/Ford/Perkins Engines)	
	1283460	Ref	450AJ Series II (USA Built Machines with Caterpillar/Deutz/Ford/Perkins Engines)	
	2792725	Ref	450AJ Series II (USA Built Machines with GM Engines)	
	1283373	Ref	450AJ Series II (USA Built Machines with GM Engines)	
	1283460	Ref	450AJ Series II (USA Built Machines with GM Engines)	
	2792580	Ref	450AJ Series II (Belgium Built Machines)	
	1283373	Ref	450AJ Series II (Belgium Built Machines)	
	1283460	Ref	450AJ Series II (Belgium Built Machines)	
		Ref	**Standard Hydraulic Schematic**	

ITEM	PART NUMBER	QTY	DESCRIPTION	REV
	2792518	Ref	USA Built Machines **(SN 0300065080 through 0300107511)**	
	2792780	Ref	USA Built Machines **(SN 0300107512 through 0300123999)**	
	2792518	Ref	USA Built Machines **(Prior to SN 1300003222)**	
	2792780	Ref	USA Built Machines **(SN 1300003222 through 1300006000)**	
	2792473	Ref	**Tow Bar Hydraulic Diagram**	
	1283373	Ref	**Tow Bar Hydraulic Diagram**	
	1283460	Ref	**Tow Bar Hydraulic Diagram**	

SECTION 7 - ELECTRICAL

FIGURE 7-1. ELECTRICAL DIAGRAM LIST

ITEM	PART NUMBER	QTY	DESCRIPTION	REV
	0257887	Ref	**ALARM ELECTRICAL DIAGRAM**	
	0258921	Ref	**ETHER START ELECTICAL DIAGRAM**	
	1283002	Ref	**ETHER START ELECTICAL DIAGRAM**	
		Ref	**GENERATOR ELECTRICAL DIAGRAM (2500W)**	
		Ref	**Note: For Diagram for Machines with SkyPower Generator, see JLG Supplement P/N 3124242.**	
		Ref	**110V (Caterpillar)**	
	4933215	Ref	**USA Built Machines (SN 0300065080 through 0300087208)**	
	4933300	Ref	**USA Built Machines (SN 0300087209 through 0300123999)**	
		Ref	**110V (Deutz)**	
	4933215	Ref	**USA Built Machines (110V/60Hz) (SN 0300065080 through 0300077520)**	
	4933250	Ref	**USA Built Machines (110V/50Hz) (SN 0300065080 through 0300077520)**	
	4933238	Ref	**USA Built Machines (SN 0300077521 through 0300082708)**	
	4933300	Ref	**USA Built Machines (SN 0300082709 through 0300123999)**	
	4933215	Ref	**Belgium Built machines (110V/60Hz) (Prior to SN 1300000316)**	
	4933250	Ref	**Belgium Built Machines (110V/50Hz) (Prior to SN 1300000316)**	
	4933238	Ref	**Belgium Built Machines (SN 1300000316 through 1300000730)**	
	4933300	Ref	**Belgium Built Machines (SN 1300000731 through 1300006000)**	
		Ref	**110V (Ford)**	
	4933215	Ref	**USA Built Machines (SN 0300065080 through 0300078472)**	
	4933300	Ref	**USA Built Machines (SN 0300078473 through 0300123999)**	
	4933350	Ref	**110V (GM)**	
	4933300	Ref	**110V (Perkins)**	
		Ref	**220V (Caterpillar) (ANSI Export Only)**	
	4933239	Ref	**USA Built Machines (SN 0300065080 through 0300087208)**	
	4933300	Ref	**USA Built Machines (SN 0300087209 through 0300123999)**	
		Ref	**220V (Deutz)**	
	4933216	Ref	**USA Built Machines (SN 0300065080 through 0300077520)**	
	4933239	Ref	**USA Built Machines (SN 0300077521 through 0300082708)**	
	4933300	Ref	**USA Built Machines (SN 0300082709 through 0300123999)**	
	4933216	Ref	**Belgium Built Machines (Prior to SN 1300000316)**	
	4933239	Ref	**Belgium Built Machines (SN 1300000316 through 1300000730)**	
	4933300	1	**Belgium Built Machines (SN 1300000731 through 1300006000)**	
		Ref	**220V (Ford)**	
	4933216	Ref	**USA Built Machines (SN 0300065080 through 0300078472)**	
	4933300	Ref	**USA Built Machines (SN 0300078473 through 0300123999)**	
	See Note	Ref	**220V (GM) (Note: Not Available)**	
	4933300	Ref	**220V (Perkins)**	
	4933217	Ref	**GLOW PLUG ELECTICAL DIAGRAM (DEUTZ MACHINES)**	
		Ref	**LIGHTS ELECTRICAL DIAGRAMS**	
	4933219	Ref	**Headlights and Taillights**	
	4933231	Ref	**Chassis Floodlights**	

ITEM	PART NUMBER	QTY	DESCRIPTION	REV
	0270814	Ref	**PLATFORM WORKLIGHTS ELECTRICAL DIAGRAM**	
	4933218	Ref	**SOFT TOUCH ELECTRICAL DIAGRAM**	
		Ref	**STANDARD ELECTRICAL DIAGRAMS**	
		Ref	**Caterpillar Engine**	
	4933280	Ref	**USA Built Machines (SN 0300065080 through 0300087630)**	
	4933332	Ref	**USA Built Machines (SN 0300087631 through 0300092619)**	
	4933352	Ref	**USA Built Machines (SN 0300092620 through 0300099084)**	
	4933382	Ref	**USA Built Machines (SN 0300099085 through 0300123999)**	
	4933280	Ref	**Belgium Built Machines (Prior to SN 1300001008)**	
	4933332	Ref	**Belgium Built Machines (SN 1300001008 through 1300001426)**	
	4933352	Ref	**Belgium Built Machines (SN 1300001427 through 1300002603)**	
	4933382	Ref	**Belgium Built Machines (SN 1300002604 through 1300006000)**	
		Ref	**Deutz Engine**	
	4933171	Ref	**USA Built Machines (SN 0300065080 through 0300085628)**	
	4933326	Ref	**USA Built Machines (SN 0300085629 through 0300099084)**	
	4933384	Ref	**USA Built Machines (SN 0300099085 through 0300123999)**	
	4933171	Ref	**Belgium Built Machines (Prior to SN 1300000979)**	
	4933326	Ref	**Belgium Built Machines (SN 1300000979 through 1300002603)**	
	4933384	Ref	**Belgium Built Machines (SN 1300002604 through 1300006000)**	
		Ref	**Ford Engine**	
	4933170	Ref	**USA Built Machines (SN 0300065080 through 0300087630)**	
	4933333	Ref	**USA Built Machines (SN 0300087631 through 0300123999)**	
		Ref	**GM Engine**	
	4933347	Ref	**USA Built Machines (SN 0300065080 through 0300099084)**	
	4933381	Ref	**USA Built Machines (SN 0300099085 through 0300123999)**	
	4933382	Ref	**Perkins Engine (All Machines)**	
		Ref	**STANDARD ELECTRICAL SCHEMATIC**	
		Ref	**Caterpillar Engine Machines:**	
	1870144	Ref	**USA Built (SN 0300065080 through 0300116045)**	
	1870215	Ref	**USA Built (SN 0300116046 through 0300123999)**	
	1870144	Ref	**Belgium Built Machines (Prior to SN 1300004780)**	
	1870215	Ref	**Belgium Built Machines (SN 1300004780 through 1300006000)**	
		Ref	**Deutz Engine Machines:**	
	1870144	Ref	**USA Built Machines (SN 0300065080 through 0300085628)**	
	1870191	Ref	**USA Built Machines (SN 0300085629 through 0300099084)**	
	1870215	Ref	**USA Built Machines (SN 0300099085 through 0300123999)**	
	1870144	Ref	**Belgium Built Machines (Prior to SN 1300000979)**	
	1870191	Ref	**Belgium Built Machines (SN 1300000979 through 1300002603)**	
	1870215	Ref	**Belgium Built Machines (SN 1300002604 through 1300006000)**	
	1870144	Ref	**Ford Engine (All Machines)**	
		Ref	**GM Engine Machines:**	
	1870191	Ref	**USA Built Machines (SN 0300065080 through 0300099084)**	
	1870215	Ref	**USA Built Machines (SN 0300099085 through 0300123999)**	
	1870215	Ref	**Perkins Engine (All Machines)**	

FIGURE 7-2. HARNESS COMPONENTS INSTALLATION

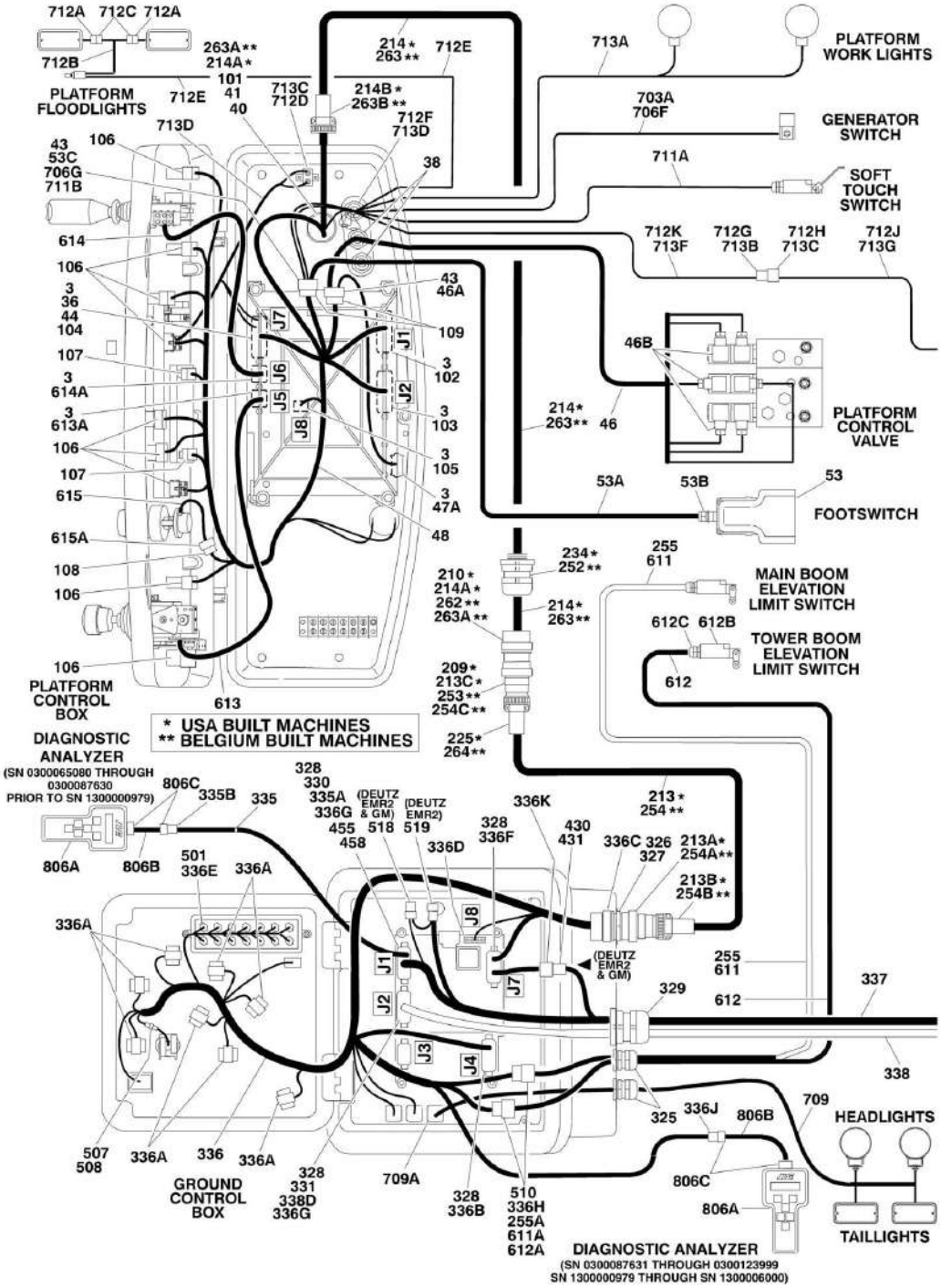

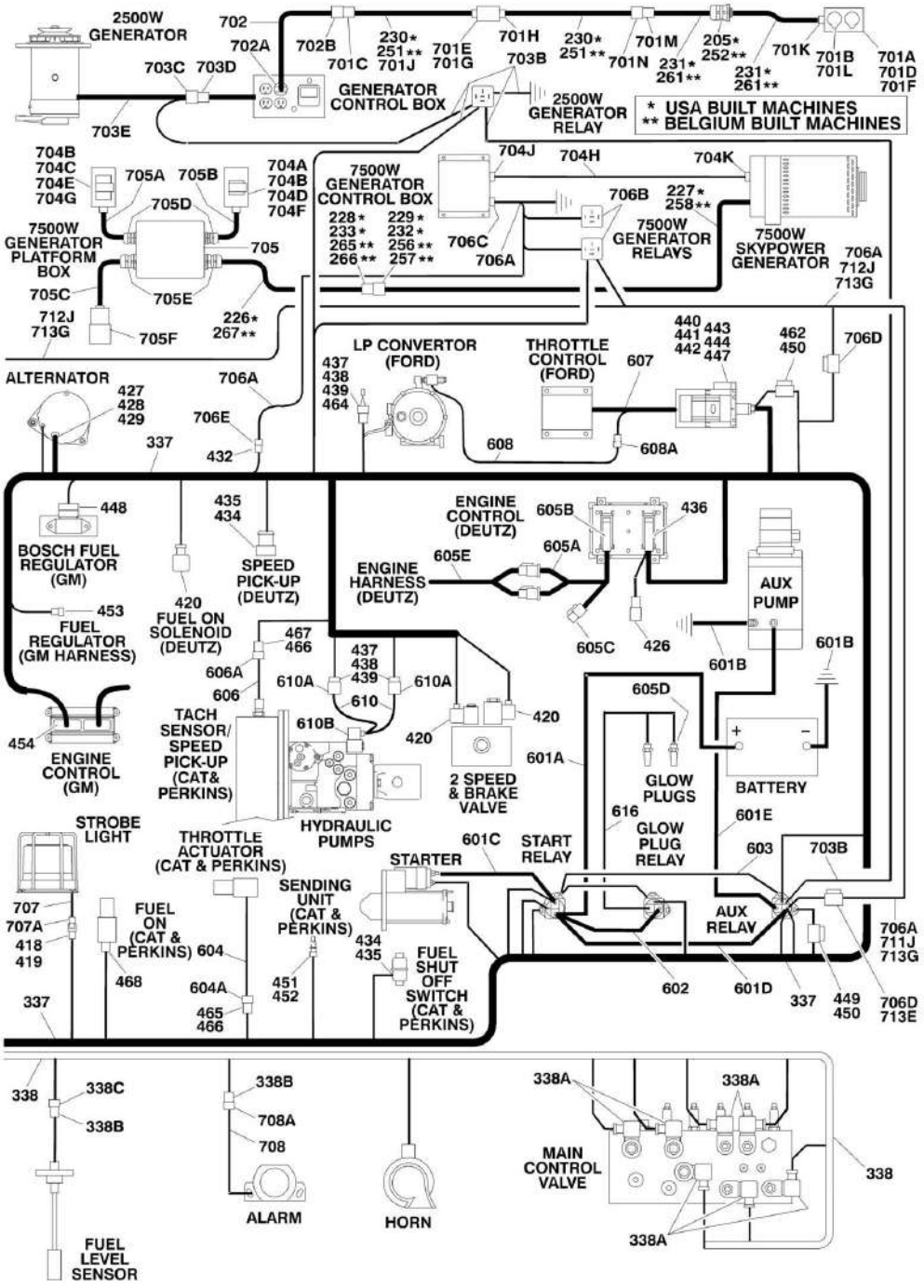
2500W GENERATOR
702
702A
702B
701C
230* 251** 701J
701E 701G
701H
230* 251**
701M
701N
231* 261**
205* 252**
701K
231* 261**
701B 701L
701A 701D 701F
703C 703D
703E
GENERATOR CONTROL BOX
703B
2500W GENERATOR RELAY
* USA BUILT MACHINES
** BELGIUM BUILT MACHINES
704B 704C 704E 704G
705A
705B
704A 704B 704D 704F
705D
7500W GENERATOR PLATFORM BOX
705
705C
705E
712J 713G
705F
226* 267**
7500W GENERATOR CONTROL BOX
704J
704H
704K
706B
227* 258**
228* 233* 265** 266**
229* 232* 256** 257**
706C
706A
7500W GENERATOR RELAYS
7500W SKYPOWER GENERATOR
706A 712J 713G
ALTERNATOR
427 428 429
706A
706E
337
432
LP CONVERTOR (FORD)
437 438 439 464
608
THROTTLE CONTROL (FORD)
607
608A
440 441 442 443 444 447
462 450
706D
448
BOSCH FUEL REGULATOR (GM)
435 434
SPEED PICK-UP (DEUTZ)
420
FUEL ON SOLENOID (DEUTZ)
453
FUEL REGULATOR (GM HARNESS)
454
ENGINE CONTROL (GM)
ENGINE CONTROL (DEUTZ)
605B
436
605A
605E
ENGINE HARNESS (DEUTZ)
605C
426
AUX PUMP
601B
467 466
606A
606
610A
437 438 439
610
610A
610B
TACH SENSOR/ SPEED PICK-UP (CAT& PERKINS)
HYDRAULIC PUMPS
420
420
2 SPEED & BRAKE VALVE
601A
605D
GLOW PLUGS
BATTERY
616
601E
GLOW PLUG RELAY
603
703B
STROBE LIGHT
THROTTLE ACTUATOR (CAT & PERKINS)
601C
START RELAY
STARTER
SENDING UNIT (CAT & PERKINS)
AUX RELAY
707
707A
418 419
FUEL ON (CAT & PERKINS)
604
468
604A
465 466
451 452
434 435
FUEL SHUT OFF SWITCH (CAT & PERKINS)
602
601D
337
449 450
706D 713E
706A 711J 713G
337
338
338C
338B
FUEL LEVEL SENSOR
338B
708A
708
ALARM
HORN
338A
338A
MAIN CONTROL VALVE
338
338A

FIGURE 7-2. HARNESS COMPONENTS INSTALLATION

ITEM	PART NUMBER	QTY	DESCRIPTION	REV
	0861512	Ref	**PLATFORM CONSOLE BOX COMPONENTS**	
3	0100048	AR	Grease, Dielectric	
38	4460428	2	Connector, Strain Relief	
40	4460470	1	Nut, Terminal	
41	4460471	1	Lockwasher, Terminal	
43	4460708	2	Receptacle - 15 Position	
44	4460905	5	Seal, Plug	
46	4922533	1	Harness, Upper Valve	3-C
46A	4460226	7	Socket, Female	
46B	4460880	6	Connector, DIN	
47	4922666	1	Harness, Analyzer Cable	2-B
47	4460226	4	Socket, Female (Not Shown - Located at J2)	
47A	4460761	1	Connector, Female - 4 Position	
47A	4460227	4	Pin, Male	
53	0272970	Ref	Footswitch Components	A
53A	1060918	8 ft/2.4m	Cable, Electrical - 18/3	
53B	4460071	1	Connector, Strain Relief	
53C	4460226	2	Socket, Female	
53C	4460464	1	Pin, Male Deutsch	
54	4922669	1	Harness, Platform Box (See Items 101-109 for Breakdown)	
	4922669	Ref	**PLATFORM BOX HARNESS ASSEMBLY**	2-B
101	4460866	1	Connector - 19 Position	
101	4460464	7	Pin, Male Deutsch 16 Ga	
101	4460508	3	Pin, Male Deutsch 12 Ga	
102	4460874	1	Connector - 35 Position (Natural)	
102	4460871	28	Socket, Female	
103	4460875	1	Connector - 35 Position (Gray)	
103	4460871	23	Socket, Female	
104	4460873	1	Connector - 35 Position (Black)	
104	4460871	25	Socket, Female	
105	4460879	1	Connector, Male 2 Position	
105	4460887	2	Terminal (12 Gauge)	
106	4460418	8	Connector, Female - 6 Position	
106	4460419	24	Socket, Female	
107	4460225	4	Plug, Male - 6 Position	
107	4460226	18	Socket, Female	
108	4460225	1	Plug, Male - 6 Position	
108	4460227	5	Pin, Male	
109	4460434	2	Plug, Male - 15 Position	
109	4460227	25	Pin, Male	
		Ref	**BOOM CABLES INSTALLATION (USA BUILT MACHINES - 1ST SN DIGIT IS 0)**	
	0271311	Ref	**450A Series II without SkyPower (ANSI, ANSI Export and CSA Specs)**	J
	0271310	Ref	**450A Series II without SkyPower (Australian and CE Specs)**	J
	0273279	Ref	**450A Series II with SkyPower**	C
	1001097502	Ref	**450A Series II with Arctic Package**	A
	1001097503	Ref	**450A Series II with Arctic Package with SkyPower**	A
	0271122	Ref	**450AJ Series II without SkyPower (ANSI, ANSI Export and CSA Specs)**	J

ITEM	PART NUMBER	QTY	DESCRIPTION	REV
	0271206	Ref	**450AJ Series II without SkyPower (Australian and CE Specs)**	J
	0273280	Ref	**450AJ Series II with SkyPower**	C
	0275116	Ref	**450AJ Series II with Arctic Package**	C
	0275786	Ref	**450AJ Series II with Arctic Package with SkyPower**	C
205	4460425	1	Connector, Strain Relief (Without SkyPower Only)	
209	4460865	1	Connector - 19 Position	
209	2820031	AR	Heat Shrink	
210	4460866	1	Connector - 19 Position	
210	2820031	AR	Heat Shrink	
213		Ref	Harness Assembly - Tower Boom (12/4 - 18/8) Options:	
213	4922530	1	Harness Assembly (Without Arctic Package)	3-D
213	4923458	1	Harness Assembly (With Arctic Package)	1-A
213		Ref	Cable, Electrical - 12/4 & 18/8 Options:	
213	1060896	34 ft/10.4m	Cable, Electrical (Without Arctic Package)	
213	4923462	34 ft/10.4m	Cable, Electrical (With Arctic Package Only)	
213	2820118	6 in/15cm	Heat Shrink	
213A	4460865	1	Connector - 19 Position	
213A	4460465	11	Socket, Female 18 Gauge	
213A	4460509	4	Socket, Female 12 Gauge	
213A	4460466	4	Seal, Plug	
213B	4460473	1	Clamp, Cable	
213C	4460464	11	Pin, Male 18 Gauge	
213C	4460508	4	Pin, Male 12 Gauge	
214		Ref	Harness Assembly - Main Boom (12/4 - 18/8) Options:	
214		Ref	Cable, Electrical - 12/4 & 18/8 Options:	
214	1060896	29 ft/8.84m	Cable, Electrical (Without Arctic Package)	
214	4923462	28 ft/8.5m	Cable, Electrical (With Arctic Package)	
214	2820118	6 in/15cm	Heat Shrink	
214A	4460865	2	Connector - 19 Position	
214A	4460465	22	Socket, Female 18 Gauge	
214A	4460509	8	Socket, Female 12 Gauge	
214A	4460466	4	Seal, Plug	
214B	4460473	1	Clamp, Cable	
225	4460473	1	Clamp, Cable	
226		Ref	Cable, Electrical 8/5 - SkyPower Main Boom Options:	
226	Not Required	0	Cable, Electrical 8/5 - SkyPower Main Boom (Without SkyPower)	
226	Not Required	0	Cable, Electrical 8/5 - SkyPower Main Boom (With Artic Package)	
226	4922929	1	Cable, Electrical 8/5 - SkyPower Main Boom (With SkyPower)	
226	4923616	NLA	Cable Electrical 8/5 - SkyPower Main Boom (With Artic Package and SkyPower) (Use p/n 4922929)	
227		Ref	Cable, Electrical 8/5 - SkyPower Tower Boom Options:	
227	Not Required	0	Cable, Electrical 8/5 - SkyPower Tower Boom (Without SkyPower)	
227	Not Required	0	Cable, Electrical 8/5 - SkyPower Tower Boom (With Artic Package)	
227	4922857	1	Cable, Electrical 8/5 - SkyPower Tower Boom (With SkyPower)	
227	4923615	NLA	Cable Electrical 8/5-SkyPower Main Boom (With Artic Package and SkyPower) (Use p/n 4922857)	

ITEM	PART NUMBER	QTY	DESCRIPTION	REV
228	1671092	1	Cover, Female Connector (With SkyPower Only)	
229	1671093	1	Cover, Male Plug (With SkyPower Only)	
230		Ref	Cable, Electrical 12/3 Options:	
230		Ref	Machines Without Arctic Package or SkyPower	
230	1060494	NLA	ANSI, ANSI Export and CSA Specs (Use p/n 1060987) **(SN 0300065080 through 0300068439)**	
230	1060987	1	ANSI, ANSI Export and CSA Specs **(SN 0300068440 through 0300123999)**	
230	1060461	NLA	Australian and CE Specs (Use p/n 1060989) **(SN 0300065080 through 0300068439)**	
230	1060989	1	Australian and CE Specs **(SN 0300068440 through 0300123999)**	
230		Ref	Machines With Arctic Package and/or SkyPower	
230	4923460	1	With Arctic Package	
230	Not Required	0	With Arctic Package with SkyPower	
230	Not Required	0	With SkyPower	
231		Ref	Cable, Electrical 12/3 Options:	
231		Ref	Machines Without Arctic Package or SkyPower	
231	1060494	NLA	ANSI, ANSI Export and CSA Specs (Use p/n 1060988) **(SN 0300065080 through 0300068439)**	
231	1060988	1	ANSI, ANSI Export and CSA Specs **(SN 0300068440 through 0300123999)**	
231	1060461	NLA	Australian and CE Specs (Use p/n 1060990) **(SN 0300065080 through 0300068439)**	
231	1060990	1	Australian and CE Specs **(SN 0300068440 through 0300123999)**	
231		Ref	Machines With Arctic Package and/ or SkyPower	
231	4923461	1	With Arctic Package	
231	Not Required	0	With Arctic Package with SkyPower	
231	Not Required	0	With SkyPower	
232	4460960	1	Plug, Female (With SkyPower Only)	
233	4460959	1	Connector, Male (With SkyPower Only)	
234		Ref	Connector, Strain Relief	
234	4460425	1	Without Arctic Package **(SN 0300065080 through 0300104164)**	
234	1321692	1	Without Arctic Package **(SN 0300104165 through 0300123999)**	
234	1321692	1	Terminal, Strain Relief, with SkyPower Only **(SN 0300104165 through 0300123999)**	
234	1321692	1	450AJ Series II With Arctic Package and Arctic Package with SkyPower **(SN 0300104165 through 0300123999)**	
234	1321694	1	450AJ Series II With Arctic Package and Arctic Package with SkyPower **(SN 0300104165 through 0300123999)**	
		Ref	**BOOM CABLES INSTALLATION (BELGIUM BUILT MACHINES - 1ST SN DIGIT IS 1)**	
	0272594	Ref	**Tower Boom Components without SkyPower**	D
	0275436	Ref	**Tower Boom Components with SkyPower**	D
251	1060991	1	Cable, Electrical 12/3 (Without SkyPower Only)	
252		Ref	Connector, Strain Relief Options:	
252	4460425	2	Without SkyPower	
252	4460425	1	With SkyPower **(Prior to SN 1300002739)**	
252	1321692	1	With SkyPower **(SN 1300002739 through 1300006000)**	
253	4460866	1	Connector - 19 Position	
253	2820031	AR	Heat Shrink	

ITEM	PART NUMBER	QTY	DESCRIPTION	REV
254	4922530	1	Harness Assembly - Tower Boom (12/4 - 18/8)	3-D
254	1060896	34 ft/10.4m	Cable, Electrical - 12/4 & 18/8	
254	2820118	6 in/15cm	Heat Shrink	
254A	4460865	1	Connector - 19 Position	
254A	4460465	11	Socket, Female 18 Gauge	
254A	4460509	4	Socket, Female 12 Gauge	
254A	4460466	4	Seal, Plug	
254B	4460473	1	Clamp, Cable	
254C	4460464	11	Pin, Male 18 Gauge	
254C	4460508	4	Pin, Male 12 Gauge	
255	4922770	1	Cable, Electrical 18/2	
255A	4460226	2	Socket, Female	
256	1671093	1	Cover, Male Plug (With SkyPower Only)	
257	4460960	1	Plug, Female (With SkyPower Only)	
258		Ref	Cable, Electrical 8/5 - SkyPower Tower Boom Options:	
258	Not Required	0	Cable, Electrical 8/5 - SkyPower Tower Boom (Without SkyPower)	
258	4922857	1	Cable, Electrical 8/5 - SkyPower Tower Boom (With SkyPower)	
	0272665	Ref	**Main Boom Components without SkyPower**	C
	0275437	Ref	**Main Boom Components with SkyPower**	B
261	1060996	1	Cable, Electrical 12/3	
262	4460865	1	Connector - 19 Position	
263	4922532	1	Harness Assembly - Main Boom (12/4 - 18/8)	B
263	1060896	29 ft/8.84m	Cable, Electrical - 12/4 & 18/8	
263	2820118	6 in/15cm	Heat Shrink	
263A	4460865	2	Connector - 19 Position	
263A	4460465	22	Socket, Female 18 Gauge	
263A	4460509	8	Socket, Female 12 Gauge	
263A	4460466	4	Seal, Plug	
263B	4460473	1	Clamp, Cable	
264	4460473	1	Clamp, Cable	
265	1671092	1	Cover, Female Connector (With SkyPower Only)	
266	4460959	1	Connector, Male (With SkyPower Only)	
267		Ref	Cable, Electrical 8/5 - SkyPower Main Boom Options:	
267	Not Required	0	Cable, Electrical 8/5 - SkyPower Main Boom (Without SkyPower)	
267	4922858	1	Cable, Electrical 8/5 - SkyPower Main Boom (With SkyPower) **(Prior to SN 1300002739)**	
267	4922929	1	Cable, Electrical 8/5 - SkyPower Main Boom (With SkyPower) **(SN 1300002739 through 1300006000)**	
		Ref	**GROUND CONTROL BOX COMPONENTS**	
325	4460426	AR	Connector, Strain Relief	
325	3520035	AR	Plug	
326	4460470	1	Nut, Terminal	
327	4460471	1	Locknut, Terminal	
328	0100048	AR	Grease, Dielectric	
329	4460526	1	Connector, Strain Relief	
330	4460874	1	Connector (Natural)	
330	4460905	4	Seal, Plug	
331	4460875	1	Connector (Gray)	

ITEM	PART NUMBER	QTY	DESCRIPTION	REV
331	4460905	4	Seal, Plug	
335	4922666	1	Cable, Analyzer (USA Built Machines) **(SN 0300065080 through 0300087630)**	2
335	4922666	1	Cable, Analyzer (Belgium Built Machines) **(Prior to SN 1300000979)**	2
335A	4460226	4	Socket, Female (Located at J1)	
335B	4460761	1	Connector, Female - 4 Position	
335B	4460227	4	Pin, Male	
336		Ref	Ground Control Box Harness Assembly	
336		Ref	Caterpillar/Perkins Engines:	
336	4922638	1	USA Built Machines **(SN 0300065080 through 0300087630)**	5-F
336	4923455	1	USA Built Machines **(SN 0300087631 through 0300099084)**	2-B
336	4923575	1	USA Built Machines **(SN 0300099085 through 0300123999)**	C
336	4922638	1	Belgium Built Machines **(Prior to SN 1300001008)**	
336	4923455	1	Belgium Built Machines **(SN 1300001008 through 1300002603)**	
336	4923575	1	Belgium Built Machines **(SN 1300002604 through 1300006000)**	
336		Ref	Deutz Engines:	
336	4922638	1	USA Built Machines **(SN 0300065080 through 0300085628)**	
336	4923223	1	USA Built Machines **(SN 0300085629 through 0300099084)**	G
336	4923575	1	USA Built Machines **(SN 0300099085 through 0300123999)**	C
336	4922638	1	Belgium Built Machines **(Prior to SN 1300000979)**	5-F
336	4923223	1	Belgium Built Machines **(SN 1300000979 through 1300002603)**	G
336	4923575	1	Belgium Built Machines **(SN 1300002604 through 1300006000)**	C
336		Ref	Ford Engines:	
336	4922638	1	USA Built Machines **(SN 0300065080 through 0300087630)**	5-F
336	4923231	1	USA Built Machines **(SN 0300087631 through 0300099084)**	5-E
336	4923575	1	USA Built Machines **(SN 0300099085 through 0300123999)**	C
336		Ref	GM Engines	
336	4923223	1	USA Built Machines **(SN 0300065080 through 0300099084)**	F
336	4923575	1	USA Built Machines **(SN 0300099085 through 0300123999)**	C
336	3990010	2	Diode 6 Amp (Not Shown)	
336A	4460418	9	Connector, Female - 6 Position	
336A	4460419	27	Socket, Female	
336B	4460876	1	Connector - 35 Position (Blue)	
336B	4460871	28	Socket, Female	
336B	4460905	31	Seal, Plug	
336C	4460866	1	Connector - 19 Pin	
336C	4460464	10	Pin, Male Deutsch 16 Ga	
336D	4460878	1	Housing, Terminal - 4 Position	
336D	4460887	3	Terminal (12 Gauge)	
336E	4120035	7	Base, Light	
336E	4460634	8	Terminal (16 Gauge)	
336E	4460635	6	Terminal (12 Gauge)	
336F	4460873	1	Connector - 35 Position (Black)	
336F	4460871	17	Socket, Female	
336F	4460905	2	Seal, Plug	
336G	4460871	3	Socket, Female	
336H	4460434	AR	Plug, Male - 15 Position	
336H	4460227	17	Pin	

ITEM	PART NUMBER	QTY	DESCRIPTION	REV
336J	4460761	1	Connector, Female - 4 Position (USA Built Machines) **(SN 0300087631 through 0300123999)**	
336J	4460761	1	Connector, Female - 4 Position (Belgium Built Machines) **(SN 1300000979 through 1300006000)**	
336J	4460227	4	Pin, Male	
336K	4460536	1	Connector, Female - 3 Position (USA Built Machines) **(SN 0300099085 through 0300123999)**	
336K	4460536	1	Connector, Female - 3 Position (Belgium Built Machines) **(SN 1300002604 through 1300006000)**	
336K	4460943	3	Pin	
337		Ref	Engine Harness Assembly (See Items 401-469 for Breakdown)	
337		Ref	Caterpillar/Perkins Engine Machines	
337	4922881	1	USA Built Machines **(SN 0300065080 through 0300087630)**	
337	4923252	1	USA Built Machines **(SN 0300087631 through 0300092619)**	
337	4923357	1	USA Built Machines **(SN 0300092620 through 0300099084)**	
337	4923581	1	USA Built Machines **(SN 0300099085 through 0300119210)**	
337	1001098840	1	USA Built Machines **(SN 0300119211 through 0300123999)**	
337	4922881	1	Belgium Built Machine **(Prior to SN 1300001008)**	
337	4923252	1	Belgium Built Machines **(SN 1300001008 through 1300001426)**	
337	4923357	1	Belgium Built Machines **(SN 1300001427 through 1300002603)**	
337	4923581	1	Belgium Built Machines **(SN 1300002604 through 1300005189)**	
337	1001098840	1	Belgium Built Machines **(SN 1300005190 through 1300006000)**	
337		Ref	Deutz Engine Machines	
337	4922522	1	USA Built Machines **(SN 0300065080 through 0300085628)**	
337	4923265	1	USA Built Machines **(SN 0300085629 through 0300123999)**	
337	4922522	1	Belgium Built Machines **(Prior to SN 1300000979)**	
337	4923265	1	Belgium Built Machines **(SN 1300000979 through 1300006000)**	
337		Ref	Ford Engine Machines	
337	4922521	1	USA Built Machines **(SN 0300065080 through 0300087630)**	
337	4923251	1	USA Built Machines **(SN 0300087631 through 0300123999)**	
337	4923395	1	GM Engine Machines	
338	4922523	1	Valve Harness Assembly	2-C
338A	4460880	12	DIN Connector	
338B	4460320	2	Connector, Female - 2 Position	
338B	4460267	4	Pin, Male	
338C	4460424	1	Connector, Male - 2 Position	
338C	4460268	2	Pin, Female	
338D	4460871	20	Socket, Female	
339		Ref	Ground Control Box Wiring Diagram (Not Shown - See Items 501 to 519 for Breakdown)	
339		Ref	Caterpillar/Perkins Engine	
339	4933280	Ref	USA Built Machines **(SN 0300065080 through 0300087630)**	
339	4933332	Ref	USA Built Machines **(SN 0300087631 through 0300092619)**	
339	4933352	Ref	USA Built Machines **(SN 0300092620 through 0300099084)**	
339	4933382	Ref	USA Built Machines **(SN 0300099085 through 0300123999)**	
339	4933280	1	Belgium Built Machines **(Prior to SN 1300001008)**	
339	4933332	1	Belgium Built Machines **(SN 1300001008 through 1300001426)**	
339	4933352	1	Belgium Built Machines **(SN 1300001427 through**	

ITEM	PART NUMBER	QTY	DESCRIPTION	REV
			1300002603)	
339	4933382	Ref	Belgium Built Machines **(SN 1300002604 through 1300006000)**	
339		Ref	Deutz Engine	
339	4933171	Ref	USA Built Machines **(SN 0300065080 through 0300087630)**	
339	4933326	Ref	USA Built Machines **(SN 0300087631 through 0300099084)**	
339	4933384	Ref	USA Built Machines **(SN 0300099085 through 0300123999)**	
339	4933171	Ref	Belgium Built Machines **(Prior to SN 1300000979)**	
339	4933326	Ref	Belgium Built Machines **(SN 1300000979 through 1300002603)**	
339	4933384	Ref	Belgium Built Machines **(SN 1300002604 through 1300006000)**	
339		Ref	Ford Engine	
339	4933170	Ref	USA Built Machines **(SN 0300065080 through 0300087630)**	
339	4933333	Ref	USA Built Machines **(SN 0300087631 through 0300123999)**	
339		Ref	GM Engine	
339	4933347	Ref	USA Built Machines **(SN 0300065080 through 0300099084)**	
339	4933381	Ref	USA Built Machines **(SN 0300099085 through 0300123999)**	
		Ref	**ENGINE HARNESS ASSEMBLY**	
		Ref	**Caterpillar/Perkins Engine Machines**	
	4922881	Ref	**USA Built Machines (SN 0300065080 through 0300087630)**	5-E
	4923252	Ref	**USA Built Machines (SN 0300087631 through 0300092619)**	3-C
	4923357	Ref	**USA Built Machines (SN 0300092620 through 0300099084)**	2-C
	4923581	Ref	**USA Built Machines (SN 0300099085 through 0300119210)**	B
	1001098840	Ref	**USA Built Machines (SN 0300119211 through 0300123999)**	A
	4922881	Ref	**Belgium Built Machines (Prior to SN 1300001008)**	5-E
	4923252	Ref	**Belgium Built Machines (SN 1300001008 through 1300001426)**	3-C
	4923357	Ref	**Belgium Built Machines (SN 1300001427 through 1300002603)**	2-C
	4923581	Ref	**Belgium Built Machines (SN 1300002604 through 1300005189)**	B
	1001098840	Ref	**Belgium Built Machines (SN 1300005190 through 1300006000)**	A
		Ref	**Deutz Engine Machines**	
	4922522	Ref	**USA Built Machines (SN 0300065080 through 0300085628)**	8-H
	4923265	Ref	**USA Built Machines (SN 0300085629 through 0300123999)**	E
	4922522	Ref	**Belgium Built Machines (Prior to SN 1300000979)**	8-H
	4923265	Ref	**Belgium Built Machines (SN 1300000979 through 1300006000)**	E
		Ref	**Ford Engine Machines**	
	4922521	Ref	**USA Built Machines (SN 0300065080 through 0300087630)**	7-I
	4923251	Ref	**USA Built Machines (SN 0300087631 through 0300123999)**	3-C
	4923395	Ref	**GM Engine Machines**	D
418	4460424	1	Receptacle, Female - 2 Position	
419	4460268	2	Socket, Female	
420	4460880	AR	DIN Connector without Diode	
426	4461070	6	Receptacle with Resistor (Deutz EMR2 Engine Only)	
426	4460944	1	Terminal, Gold (Deutz EMR2 Engine Only)	
426	4461095	1	Plug, Male - 3 Position (Deutz EMR2 Engine Only)	
427	4460582	3	Terminal (Ford Engine Only)	
427	4460580	1	Lock, Terminal (Ford Engine Only)	
427	4460579	1	Housing - 3 Position (Ford Engine Only)	

ITEM	PART NUMBER	QTY	DESCRIPTION	REV
430	4460539	1	Plug, Male - 3 Position (Deutz EMR2 and GM Engines Only)	
431	4460944	1	Terminal, Gold (Deutz EMR2 and GM Engines Only)	
432	4461157	1	Receptacle, Female - 2 Position (GM Engine Only)	
432	4460979	2	Pin, Male (GM Engine Only)	
432	4460458	2	Seal, Terminal (GM Engine Only)	
434		Ref	Receptacle, Female - 2 Position Options:	
434	4460890	1	Deutz Engine	
434	4460890	Ref	Caterpillar/Perkins Engine USA Built Machines **(SN 0300065080 through 0300119210)**	
434	4460890	Ref	Caterpillar/Perkins Engine Belgium Built Machines **(Prior to SN 1300005190)**	
434	1001098923	1	Caterpillar/Perkins Engine USA Built Machines **(SN 0300119211 through 0300123999)**	
434	1001098923	1	Caterpillar/Perkins Engine Belgium Built Machines **(SN 1300005190 through 1300006000)**	
435		Ref	Terminal Options:	
435	4460889	2	Deutz Engine Only	
435	4460889	Ref	Caterpillar/Perkins Engine USA Built Machines **(SN 0300065080 through 0300119210)**	
435	4460889	Ref	Caterpillar/Perkins Engine Belgium Built Machines **(Prior to SN 1300005190)**	
435	4460465	2	Caterpillar/Perkins Engine USA Built Machines **(SN 0300119211 through 0300123999)**	
435	4460465	2	Caterpillar/Perkins Engine Belgium Built Machines **(SN 1300005190 through 1300006000)**	
436	4461052	1	Plug - 25 Position (Deutz EMR2 Engine Only)	
436	4461005	5	Terminal 18-20 Gauge (Deutz EMR2 Engine Only)	
436	4461060	2	Terminal 14-16 Gauge (Deutz EMR2 Engine Only)	
436	4461006	5	Seal 18-20 Gauge (Deutz EMR2 Engine Only)	
436	4461054	2	Seal 14-16 Gauge (Deutz EMR2 Engine Only)	
436	4461008	18	Plug, Hole (Deutz EMR2 Engine Only)	
436	4461053	1	Cover, Plug (Deutz EMR2 Engine Only)	
437	4460742	AR	Plug, Male - 2 Position	
438	4460457	AR	Terminal, Female	
439	4460458	AR	Seal, Terminal	
440	4460713	1	Connector, Housing 42 Position (Ford Engine Only)	
441	4460725	1	Connector Wedge Lock, Center (Ford Engine Only)	
442	4460726	2	Connector Wedge Lock, Side (Ford Engine Only)	
443	4460800	29	Connector, Plug (Ford Engine Only)	
444	4460799	7	Pin, Male (Ford Engine Only)	
445	4460891	1	Connector, 2 Position Deutsch	
446	4460539	1	Connector, 3 Position Deutsch	
447	4460728	3	Pin, Male (Ford Engine Only)	
448	4461121	1	Plug, Male - 4 Position (GM Engine Only)	
448	4461122	4	Socket, Female (GM Engine Only)	
448	4461123	4	Seal, Terminal (GM Engine Only)	
449	2400061	1	Fuse 10 Amp (Ford Engine Only)	
450	2400060	2	Holder, Fuse (Ford Engine Only)	
451	4460996	1	Receptacle, Female - 3 Position (Caterpillar Engine Only) (USA Built Machines) **(SN 0300065080 through 0300092620)**	
451	4460996	1	Receptacle, Female - 3 Position (Caterpillar Engine Only) (Belgium Built Machines) **(Prior to SN 1300001427)**	
452	4460995	2	Terminal (Caterpillar Engine Only) (USA Built Machines) **(SN 0300065080 through 0300092620)**	

ITEM	PART NUMBER	QTY	DESCRIPTION	REV
452	4460995	2	Terminal (Caterpillar Engine Only) (Belgium Built Machines) **(Prior to SN 1300001427)**	
453	4461124	1	Receptacle, Female - 4 Position (GM Engine Only)	
453	4460693	4	Pin, Male (GM Engine Only)	
453	4460608	4	Seal, Terminal (GM Engine Only)	
453	4461161	1	Lock, Terminal (GM Engine Only)	
454	4461109	1	Plug, Male - 16 Position (GM Engine Only)	
454	4461111	7	Pin, Male (GM Engine Only)	
454	4461113	7	Seal, Terminal (GM Engine Only)	
454	4461222	9	Terminal, Cavity Plug (GM Engine Only)	
455	4460871	AR	Socket, Female	
455	3990001	1	Diode (Caterpillar/Perkins Engine Only)	
459	2400065	1	Fuse (Ford Engine Only)	
462	2400065	1	Fuse 30 Amp (Ford Engine Only)	
464	3730120	1	Resistor Assembly (Ford Engine Only)	
465	4460891	1	Plug, Male - 2 Position (Caterpillar/Perkins Engine Only)	
466	4460465	5	Socket, Female (Caterpillar/Perkins Engine Only)	
467	4460539	1	Plug, Male - 3 Position (Caterpillar/Perkins Engine Only)	
468	4460994	1	Receptacle, Female - 2 Position (Caterpillar/Perkins Engine)	
468	4460993	1	Terminal (Caterpillar/Perkins Engine)	
469	3730125	1	Resistor, 120 OHM (Not Shown - Caterpillar/Perkins Engine) (USA Built Machines) **(SN 0300092620 through 0300123999)**	
469	3730125	1	Resistor, 120 OHM (Not Shown - Caterpillar/Perkins Engine) (Belgium Built Machines) **(SN 1300001427 through 1300006000)**	
		Ref	**GROUND CONTROL BOX WIRING DIAGRAM**	
		Ref	**Caterpillar/Perkins Engine**	
	4933280	Ref	**USA Built Machines (SN 0300065080 through 0300087630)**	3-E
	4933332	Ref	**USA Built Machines (SN 0300087631 through 0300092619)**	3-C
	4933352	Ref	**USA Built Machines (SN 0300092620 through 0300099084)**	2-B
	4933382	Ref	**USA Built Machines (SN 0300099085 through 0300123999)**	B
	4933280	Ref	**Belgium Built Machines (Prior to SN 1300001008)**	3-E
	4933332	Ref	**Belgium Built Machines (SN 1300001008 through 1300001426)**	3-C
	4933352	Ref	**Belgium Built Machines (SN 1300001427 through 1300002603)**	2-B
	4933382	Ref	**Belgium Built Machines (SN 1300002604 through 1300006000)**	B
		Ref	**Deutz Engine**	
	4933171	Ref	**USA Built Machines (SN 0300065080 through 0300085628)**	9-I
	4933326	Ref	**USA Built Machines (SN 0300085629 through 0300099084)**	F
	4933384	Ref	**USA Built Machines (SN 0300099085 through 0300123999)**	A
	4933171	Ref	**Belgium Built Machines (Prior to SN 1300000979)**	9-I
	4933326	Ref	**Belgium Built Machines (SN 1300000979 through 1300002603)**	F
	4933384	Ref	**Belgium Built Machines (SN 1300002604 through 1300006000)**	A
		Ref	**Ford Engine**	
	4933170	Ref	**USA Built Machines (SN 0300065080 through 0300087630)**	8-I
	4933333	Ref	**USA Built Machines (SN 0300087631 through 0300123999)**	2-B
		Ref	**GM Engine**	
	4933347	Ref	**USA Built Machines (SN 0300065080 through 0300099084)**	C
	4933381	Ref	**USA Built Machines (SN 0300099085 through 0300123999)**	A

ITEM	PART NUMBER	QTY	DESCRIPTION	REV
501	2920129	AR	Bulb, Light	
507	2400065	1	Fuse, 30Amp	
508	2400066	1	Fuse, Holder	
510	4460708	AR	Receptacle, Female - 15 Position	
510	4460226	AR	Socket, Female	
510	4922637	1	Harness, Jumper (Not Shown)	
518	4460894	1	Plug, Male - 6 Position (Caterpillar/Perkins Engine Machines USA Built Machines /All Deutz EMR2) **(SN 0300099085 through 0300123999)**	
518	4460894	1	Plug, Male - 6 Position (Caterpillar/Perkins Engine Machines Belgium Built Machines / All GM Engines) **(SN 1300002604 through 1300006000)**	
518	4460892	1	Connector, Bussbar - 6 Position (Caterpillar/Perkins Engine Machines USA Built Machines /All Deutz EMR2) **(SN 0300099085 through 0300123999)**	
518	4460892	1	Connector, Bussbar - 6 Position (Caterpillar/Perkins Engine Machines Belgium Built Machines /All GM Engines) **(SN 1300002604 through 1300006000)**	
519	2902443	1	Receptacle Kit (Deutz EMR2 Only)	
519	4461071	8	Socket, Female	
519	4461072	1	Receptacle	
519	4461073	1	Cap, Dust	
519	4461074	1	Shell, Black	
		Ref	**STANDARD HARNESS COMPONENTS**	
601		Ref	Battery Cable Kit Options:	
601	2902060	1	Caterpillar/Deutz/Perkins Engines	C
601	2902059	1	Ford Engines	A
601	2902510	1	GM Engines	B
601A		Ref	Cable - Battery to Starter Relay Options:	
601A	7016817	1	Caterpillar/Deutz/Perkins Engines	
601A	7016839	1	Ford and GM Engines	
601B		Ref	Cable - Battery and Auxiliary Pump to Ground	
601B	7027041	1	Caterpillar/Deutz/Perkins Engines (was p/n 7016837)	
601B	7016840	1	Ford and GM Engines	
601C		Ref	Cable - Starter Relay to Starter Options:	
601C	7016834	1	Caterpillar/Deutz/Perkins Engines	
601C	7016841	1	Ford and GM Engines	
601D		Ref	Cable - Starter Relay to Auxiliary Relay	
601D	7016838	1	Caterpillar/Deutz/Perkins Engines	
601D	Not Required	0	Ford and GM Engines	
601E		Ref	Cable - Auxiliary Relay to Auxiliary Pump	
601E	7016820	1	Caterpillar/Deutz/Perkins Engines	
601E	7016842	1	Ford Engines	
601E	7027014	1	GM Engines	
602		Ref	Harness Options:	
602	1060904	1	Cable, Jumper (Caterpillar/Perkins Engine Machines)	
602	4922978	1	Harness, Start Assist Solenoid (Deutz Engines USA Built Machines) **(SN 0300077683 through 0300085629)**	
602	4922978	1	Harness, Start Assist Solenoid (Deutz Engines Belgium Built Machines) **(SN 1300000353 through 1300000979)**	
603	4922737	1	Engine Grounding Harness (Caterpillar/Perkins Engine Machines)	
604	1001099927	1	Caterpillar/Perkins Throttle Actuator Harness (Includes Throttle Actuator)	

ITEM	PART NUMBER	QTY	DESCRIPTION	REV
604A	4460897	1	Receptacle, Female -2 Position	
604A	4460464	2	Pin, Male	
604A	2820018	AR	Heat Shrink	
605		Ref	Deutz EMR2 Engine Harness Components	
605A	7027796	1	Deutz Engine Harness	
605B	See Note	1	Receptacle (Note: Not Available - Purchase Item 605A)	
605C	7027793	1	Plug-In, Connector	
605D	70000345	3	Glow Plug (Used on p/n 2000338 Engine Only) (USA Built Machines) **(SN 0300095215 through 0300123999)**	
605D	70000345	3	Glow Plug (Used on p/n 2000338 Engine Only) (Belgium Built Machines) **(SN 1300001787 through 1300006000)**	
605E	7027794	1	Deutz Engine Harness (For other replacement parts refer to Deutz engine dealer)	
606	1001099926	1	Caterpillar/Perkins Speed Sensor Harness (Includes Speed Sensor)	
606A	4460536	1	Receptacle, Female -3 Position (Caterpillar/Perkins Engines Only)	
606A	4460464	3	Pin, Male (Caterpillar/Perkins Engines Only)	
606A	2820018	AR	Heat Shrink	
607		Ref	Ford Control Processor Harness Options (For other replacement parts refer to Ford engine dealer):	
607	7023663	1	Harness, ECM **(SN 0300065080 through 0300078472)**	
607	7027403	1	Harness, ECM **(SN 0300078473 through 0300123999)**	
608	See Note	1	Ford Dual Fuel Shut-Off Filter Harness (Note: Not available for purchase)	
608A	7023679	1	Electrical Connector Kit (Includes [1] 2 Position Connector, 2 Pins & 2 Seals)	
609	7027991	1	GM Engine Harness (Not Shown - For other replacement parts refer to GM industrial engine dealer)	
609	7027989	1	Connector - 10 Position (Not Shown)	
609	See Note	1	Box, Fuse (Note: Part of Harness - Not Available for Purchase)	
609	70002627	1	Cover, Fuse Box	
609	70001950	2	Relay (Power & Fuel Pump)	
609	70001951	1	Relay (Starter)	
609	70001931	1	Fuse - 60 Amp (Alternator)	
609	See Note	1	Fuse - 20 Amp (Note: Not Available - Purchase Locally)	
609	See Note	3	Fuse - 15 Amp (Note: Not Available - Purchase Locally)	
609	See Note	1	Fuse - 10 Amp (Note: Not Available - Purchase Locally)	
609	See Note	1	Fuse - 5 Amp (Note: Not Available - Purchase Locally)	
610		Ref	Pump Harness Options:	
610	See Note	2	2WD (Note: Not available for purchase)	
610	7024830	2	4WD with Series 42 Pump	
610	See Note	1	4WD With Series 42 Pump (Note: Not available for purchase)	
610A	7007498	1	Connector - 4 Position (2WD)	
610A	4460867	2	Connector - 2 Position (4WD)	
610A	4460850	4	Pin, Male (4WD)	
610B	7007497	1	Connector (2WD)	
610B	Not Required	0	4WD	
611		Ref	Limit Switch Harness Options (Does not include Limit Switch) (Part of Boom Installation on USA Built Machines Only):	
611	4922770	1	Limit Switch Harness (Without Arctic Package)	B
611	4923469	1	Limit Switch Harness (With Arctic Package)	A
611A	4460226	2	Socket, Female	

ITEM	PART NUMBER	QTY	DESCRIPTION	REV
612		Ref	Limit Switch Harness Options (Includes Limit Switch):	
612	4922714	1	Limit Switch Harness (Without Arctic Package)	B
612	4923467	1	Limit Switch Harness (With Arctic Package)	A
612		Ref	Cable, Electrical 18/2 Options:	
612	1060902	8.5 ft/2.6m	Cable, Electrical 18/2 (Without Arctic Package)	
612	4923466	8.5 ft/2.6m	Cable, Electrical 18/2 (With Arctic Package)	
612A	4460226	2	Socket, Female	
612B		Ref	Switch, Limit Switch Options:	
612B	4360321	1	USA Built Machines **(SN 0300065080 through 0300074318)**	
612B	4360548	1	USA Built Machines **(SN 0300074319 through 0300123999)**	
612B	4360548	1	USA Built Machines	
612B	4360321	1	Belgium Built Machines **(Prior to SN 1300000133)**	
612B	4360548	1	Belgium Built Machines **(SN 1300000133 through 1300006000)**	
612C		Ref	Switch, Limit Switch Options:	
612C	4460428	1	USA Built Machines **(SN 0300065080 through 0300074318)**	
612C	4460968	1	USA Built Machines **(SN 0300074319 through 0300123999)**	
612C	4460968	1	USA Built Machines with Artic Package	
612C	4460428	1	Belgium Built Machines **(Prior to SN 1300000133)**	
612C	4460968	1	Belgium Built Machines **(SN 1300000133 through 1300006000)**	
613	See Note	1	Controller Harness Assembly (Lift and Swing) (Note: Not available for purchase Complete Controller)	
613A	7022819	1	Plug, Male - 8 Position (Natural)	
613A	4460871	8	Socket, Female	
614	7022824	1	Controller Harness/Circuit Board Assembly (Drive and Steer)	
614A	7022825	1	Plug, Male - 8 Position (Black)	
614A	4460871	7	Socket, Female	
615	See Note	1	Controller Harness Assembly (Speed Control) (Note: Not Available for Purchase Complete Controller)	
615A	4460224	1	Receptacle, Female - 6 Position	
615A	4460226	8	Socket, Female	
616	4923451	1	Harness, Glow Plugs (Used on p/n 2000338 Engine Only) (USA Built Machines) **(SN 0300095215 through 0300123999)**	
616	4923451	1	Harness, Glow Plug (Used on p/n 2000338 Engine Only) (Belgium Built Machines) **(SN 1300001787 through 1300006000)**	
617	7022134	1	Ford Fuel Pump Harness (Not Shown)	
		Ref	**OPTIONAL HARNESS COMPONENTS**	
701		Ref	AC to Platform Receptacle Components	
701	0258303	Ref	110V GFI Receptacle (ANSI and CSA Specs)	5
701	0258305	Ref	220V GFI Receptacle (ANSI and CSA Specs)	4
701	0258304	Ref	110V/220V (Plug and Receptacle Supplied Locally) (ANSI Export and Australian)	3
701		Ref	110V220V CE Spec Only Options:	
701		Ref	Without Generator:	
701	0258304	Ref	110V/220V (plug and Receptacle Supplied Locally)	3
701	0275681	Ref	110V with IEC Yellow Receptacle and Plug and Circuit Breaker	B
701	0275678	Ref	220V with CEE 7 Post Ground Receptacle and Plug and Circuit Breaker (2x4 Box)	B
701	0275679	Ref	220V with CEE 7 Side Ground Receptacle and Plug and	B

ITEM	PART NUMBER	QTY	DESCRIPTION	REV
			Circuit Breaker (2x4 Box)	
701	0275683	Ref	220V with CEE 7 Post Ground Receptacle and Plug and Circuit Breaker (70mm x 70mm Box)	B
701	0275684	Ref	220V with CEE 7 Side Ground Receptacle and Plug and Circuit Breaker (70mm x 70mm Box)	B
701	0275680	Ref	220V with AFSINT 107 Keyed Ground Receptacle and Plug and Circuit Breaker (2x4 Box)	B
701	0275682	Ref	220V with IEC Blue Receptacle and Plug and Circuit Breaker	B
701		Ref	With Generator:	
701	1001101913	Ref	110V with IEC Yellow Receptacle and Plug and Circuit Breaker	B
701	1001101910	Ref	220V with CEE 7 Post Ground Receptacle and Plug and Circuit Breaker (2x4 Box)	B
701	1001101911	Ref	220V with CEE 7 Side Ground Receptacle and Plug and Circuit Breaker (2x4 Box)	B
701	1001101915	Ref	220V with CEE 7 Post Ground Receptacle and Plug and Circuit Breaker (70mm x 70mm Box)	B
701	1001101916	Ref	220V with CEE 7 Side Ground Receptacle and Plug and Circuit Breaker (70mm x 70mm Box)	B
701	1001101912	Ref	220V with AFSINT 107 Keyed Ground Receptacle and Plug and Circuit Breaker (2x4 Box)	B
701	1001101914	Ref	220V with IEC Blue Receptacle and Plug and Circuit Breaker	B
701A		Ref	Box Options:	
701A	0860038	Ref	Box (0258303/0258305 Installations)	
701A	See Note	Ref	Box (0258304 Installation) (Note: Not Available - Purchase Locally)	
701A	0861781	Ref	Box (0275681/ 0275680/ 1001101913/ 1001101914 Installations)	
701A	0861731	Ref	Box (0275678/ 0275679/ 1001101910/ 1001101911/ 1001101912 Installations)	
701A	See Note	1	**Box (0275683/0275684/1001101915/1001101916 Installations) (Note: was p/n 0861782 which is no longer available. use p/n 100110034 CEE 7 Side Ground Service Kit or p/n 1001100343 CEE 7 Post Ground Service Kit. Kit includes Box p/n 1001141967 and Items 701B, 701C, 701L & 701N.)**	
701A	0861781	1	Box (0275682 Installation)	
701B		Ref	Receptacle Options:	
701B	4460346	1	Receptacle (0258303 Installations)	
701B	4460125	1	Receptacle (0258305 Installations)	
701B	See Note	1	Receptacle (0258304 Installation) (Note: Not Available - Purchase Locally)	
701B	4461198	1	Receptacle (02756811001101913 Installations)	
701B	4461244	1	Receptacle (0275678/1001101910 Installations)	
701B	4461245	1	Receptacle (0275679/1001101911 Installations)	
701B	4461204	NLA	Receptacle (0275683/1001101915 Installations) (Use p/n 1001100343)	
701B	1001141971	NLA	Receptacle (0275683/1001101915 Installations) (Use p/n 1001100343)	
701B	4461207	NLA	Receptacle (0275684/1001101916 Installations) (Use p/n 1001100344)	
701B	1001141970	NLA	Receptacle (0275684/1001101916 Installations) (Use p/n 1001100344)	
701B	4461246	1	Receptacle (0275680/1001101912 Installations)	
701B	4461201	1	Receptacle (0275682/1001101914 Installations)	
701B	1001141968	1	Receptacle (1001100343 & 1001141971 Kits)	

ITEM	PART NUMBER	QTY	DESCRIPTION	REV
701B	1001141969	1	Receptacle (1001100344 & 1001141970 Kits)	
701C		Ref	Plug Options:	
701C	4460205	1	Plug (0258303 Installations)	
701C	4460233	1	Plug (0258305 Installations)	
701C	See Note	1	Plug (0258304 Installation) (Note: Not Available - Purchase Locally)	
701C	4461196	1	Plug (0275681 Installation)	
701C	4461202	1	Plug (0275678/0275683 Installations) and 1001100343/1001141971 Kits	
701C	4461205	1	Plug (0275679/0275684 Installations and 1001100344/1001141970 Kits)	
701C	4461249	1	Plug (0275680 Installation)	
701C	4461199	1	Plug (0275682 Installation)	
701C	Not Required	0	Plug (1001101910/ 1001101911/ 1001101912/ 1001101913/ 1001101914/ 1001101915/ 1001101916 Installations)	
701D	0903484	1	Bracket (All Installations except 0258303/0258304/0258305 Installations)	
701E	0903612	1	Bracket (All Installations except 0258303/0258304/0258305 Installations)	
701F		Ref	Decal Options:	
701F	1705325	1	Decal (110V)	
701F	3252507	1	Decal (220V)	
701G		Ref	Circuit Breaker Box Kit Options (All Installations except 0258303/0258304/0258305 Installations):	
701G	2902549	1	Circuit Breaker Box Kit (Without Generator)	D
701G	1001096070	1	Circuit Breaker Box Kit (With Generator)	D
701G	See Note	1	Breaker, Circuit - 16 Amp (was p/n 2400093)	
		Ref	**Note: For service replacement purchase (1) p/n 1001109475 & (1) p/n 1001109482.**	
701G	0861880	1	Box, Breaker	
701G	4460956	1	Barrier, Terminal Block End	
701G	4460957	1	Block, Terminal	
701H		Ref	Connector, Strain Relief Options:	
701H	4460633	2	Connector, Strain Relief (M20 Diameter)	
701H	1001097150	2	Connector, Strain Relief (M25 Diameter)	
701J	1060908	AR	Cable, Electrical 12/3 Options (All Installations except 0258303/0258304/0258305 Installations):	
701J		Ref	Cable, Electrical 12/3 (Without Generator)	
701J		Ref	Cable, Electrical 12/3 (With Generator)	
701K		Ref	Connector, Strain Relief	
701K	4460968	1	Connector, Strain Relief (All Installations except 0258303/0258304/0258305)	
701K	See Note	1	Connector, Strain Relief (0258304 Installation) (Note: Not Available - Purchase Locally)	
701K	4460071	1	Connector, Strain Relief (0258303/0258305 Installations)	
701L		Ref	Shield, Cover	
701L	Part of Item 701A	1	Shield, Cover (All Except 0258303/0258304/0258305 Installations)	
701L	4060700	1	Shield, Cover (0258303 Installation)	
701L	See Note	1	Shield, Cover (0258304 Installation) (Note: Not Available - Purchase Locally)	
701L	4060092	1	Shield, Cover (0258305 Installation)	
701L	3960422	1	Gasket, Cover (0258303/0258305 Installations)	

ITEM	PART NUMBER	QTY	DESCRIPTION	REV
701M		Ref	Plug, Male Options:	
701M	4460709	1	Plug, Male (All Installations Except 0258303 Installation)	
701M	4460205	1	Plug, Male (0258303 Installation)	
701N		Ref	Connector, Female Options:	
701N	4460710	1	Connector, Female (All Installations Except 0258303/0258305 Installations)	
701N	4460134	1	Connector, Female (0258303 Installation)	
701N	4460701	1	Connector, Female (0258305 Installation)	
701N	4461197	1	Connector, Female (1001101913 Installation)	
701N	4461200	1	Connector, Female (1001101914 Installation)	
701N	4461203	1	Connector, Female (1001101910/1001101915 Installations and 1001100343/1001141971 Kits)	
701N	4461206	1	Connector, Female (1001101911/1001101916 Installations and 1001100344/1001141970 Kits)	
701N	4461250	1	Connector, Female (1001101912 Installation)	
		Ref	**Kit, Plug and Socket Options:**	
		Ref	**Without Generator:**	
	See Note	Ref	0258303 & 0258305 Installation (Note: Not Available Purchase Individual Components)	
	See Note	Ref	**0258304 Installation (Note: Not Available - Purchase Locally)**	
	0275216	Ref	110V with IEC Yellow (Includes Items 701A, 701B, 701C & 701L) (0275681 Installation)	A
	0275452	Ref	220V with CEE 7 Post Ground (2 x 4 Box) (Includes Items 701A, 701B, 701C & 701L) (0275678 Installation)	A
	0275453	Ref	220V with CEE 7 Side Ground (2 x 4 Box) (Includes Items 701A, 701B, 701C & 701L) (0275679 Installation)	A
	0275218	Ref	220V with CEE 7 Post Ground (70mm x 70mm Box) (Includes Items 701A-701C, 701L & 701N) (0275683 Installation) (Use p/n 1001100343)	B-2
	0275219	Ref	220V with CEE 7 Side Ground (70mm x 70mm Box) (Includes Items 701A-701C, 701L & 701N) (0275684 Installation) (Use p/n 1001100344)	B-A
	0275454	Ref	220V with AFSINT 107 Keyed Ground (Includes Items 701A, 701B, 701C & 701L) (0275680 Installation) 220V with IEC Blue (Includes Items 701A, 701B, 701C & 701L) (0275682 Installation)	A
701N	0275217	1	220V WITH IEU Blue (include Items 701A, 701B, 701C & 701L) (0275682 Installation)	A
		Ref	**With Generator:**	
	1001100341	Ref	110V with IEC Yellow (Includes Items 701A, 701B & 701L) (1001101913 Installation)	A
	1001100345	Ref	220V with CEE 7 Post Ground (2 x 4 Box) (Includes Items 701A, 701B & 701L) (1001101910 Installation)	A
	1001100347	Ref	220V with CEE 7 Side Ground (2 x 4 Box) (Includes Items 701A, 701B & 701L) (1001101911 Installation)	A
	1001100346	Ref	220V with AFSINT 107 Keyed Ground (Includes Items 701A, 701B & 701L) (1001101912 Installation)	A
	1001100342	Ref	220V with IEC Blue (Includes Items 701A, 701B & 701L) (1001101914 Installation)	A
	1001091971	Ref	220V with CEE 7 Post Ground (70mm x 70mm Box) (Includes Items 701A, 701B & 701L) (1001101915 Installation) (Use p/n 1001100343 Kit)	B
	1001091970	Ref	220V with CEE 7 Side Ground (70mm x 70mm Box) (Includes Items 701A, 701B & 701L) (1001101916 Installation) (Use p/n 1001100344 Kit)	B
702	4921829	1	2500W Generator to Rear of Boom Harness (110V) (ANSI and	2

ITEM	PART NUMBER	QTY	DESCRIPTION	REV
			CSA Specs)	
702	4921954	1	2500W Generator to Rear of Boom Harness (220V) (ANSI and CSA Specs)	2
702	See Note	1	2500W Generator to Rear of Boom Harness (Australian 7 CE Specs)	2
702		Ref	**Note: Harness used to connect AC at platform harness to generator receptacle to power platform receptacle.**	
702	1060494	AR	Cable, Electrical - 12/3 (ANSI and CSA Specs)	
702	1060461	AR	Cable, Electrical - 12/3 (Australian and CE Specs)	
702		Ref	Cable, Electrical - 12/3 (110V)	
702		Ref	Cable, Electrical - 12/3 (220V)	
702A	4460205	1	Plug, Male (110V)	
702A	4460233	1	Plug, Male (220V)	
702B		Ref	Receptacle, Female Options:	
702B	4460134	1	110V (ANSI and CSA Specs)	
702B	4460701	1	220V (ANSI and CSA Specs)	
702B	See Note	1	110V/220V (Machines with Locally Supplied Plug and Receptacle) (ANSI Export, Australian and CE Specs) (Note: Not Available - Purchase Locally)	
702B	4461197	1	110V with IEC Yellow Receptacle and Plug and Circuit Breaker (CE Specs Option)	
702B	4461203	1	220V with CEE 7 Post Ground Receptacle and Plug and Circuit Breaker (2x4 Box) (CE Specs Option)	
702B	4461206	1	220V with CEE 7 Side Ground Receptacle and Plug and Circuit Breaker (2x4 Box) (CE Specs Option)	
702B	4461203	1	220V with CEE 7 Post Ground Receptacle and Plug and Circuit Breaker (70mm X 70mm Box) (CE Specs Option)	
702B	4461250	1	220V with AFSINT 107 Keyed Ground Receptacle and Plug and Circuit Breaker (2x4 Box) (CE Specs Option)	
702B	4461200	1	220V with IEC Blue Receptacle and Plug and Circuit Breaker (CE Specs Option)	
703		Ref	2500W Generator Electrical Components	
703		Ref	110V (Caterpillar)	
703	4933215	AR	USA Built Machines **(SN 0300065080 through 0300087208)**	2-C
703	4933300	AR	USA Built Machines **(SN 0300087209 through 0300123999)**	2-A
703		Ref	110V (Deutz)	
703	4933215	AR	USA Built Machines (ANSI, ANSI Export & CSA Specs) **(SN 0300065080 through 0300077521)**	2-C
703	4933250	AR	USA Built Machines (Australian and CE Specs) **(SN 0300065080 through 0300077521)**	2-C
703		Ref	2500W Generator Electrical Components	
703		Ref	110V (Deutz) (Continued)	
703	4933238	AR	USA Built Machines **(SN 0300077521 through 0300082708)**	1-A
703	4933300	AR	USA Built Machines **(SN 0300082709 through 0300123999)**	2-A
703	4933215	AR	Belgium Built Machines (ANSI, ANSI Export & CE Specs) **(Prior to SN 1300000316)**	2-C
703	4933250	AR	Belgium Built Machines (Australian and CE Specs) **(Prior to SN 1300000316)**	2-C
703	4933238	AR	Belgium Built Machines **(SN 1300000316 through 1300000730)**	1-A
703	4933300	AR	Belgium Built Machines **(SN 1300000731 through 1300006000)**	2-A
703		Ref	110V (Ford)	
703	4933215	AR	USA Built Machines **(SN 0300065080 through 0300078473)**	2-C
703	4933300	AR	USA Built Machines **(SN 0300065080 through 0300078473)**	2-A

ITEM	PART NUMBER	QTY	DESCRIPTION	REV
703	4933350	AR	110V (GM)	A
703	4933300	AR	110V (Perkins)	2/A
703		Ref	220V (Caterpillar) (ANSI Export Only)	
703	4933239	AR	USA Built Machines **(SN 0300065080 through 0300087208)**	1-A
703	4933300	AR	USA Built Machines **(SN 0300087209 through 0300123999)**	2-A
703		Ref	220V (Deutz)	
703	4933216	AR	USA Built Machines **(SN 0300065080 through 0300077520)**	1-B
703	4933239	AR	USA Built Machines **(SN 0300077521 through 0300082708)**	1-A
703	4933300	AR	USA Built Machines **(SN 0300082709 through 0300123999)**	2-A
703	4933216	AR	Belgium Built Machines **(Prior to SN 1300000316)**	1-B
703	4933239	AR	Belgium Built Machines **(SN 1300000316 through 1300000730)**	1-A
703	4933300	AR	Belgium Built Machines **(SN 1300000731 through 1300006000)**	2-A
703		Ref	220V (Ford)	
703	4933216	AR	USA Built Machines **(Including 0300078473)**	1-B
703	4933300	AR	USA Built Machines **(SN 0300078473 through 0300123999)**	2-B
703	See Note	AR	220V (GM) (Note: Not Available for Purchase)	
703	4933300	1	220V (Perkins)	2-A
703	3990010	1	Diode - 6 Amp (Not Shown) (USA Built Machines) **(SN 0300065080 through 0300087209)**	
703	3990010	1	Diode - 6 Amp (Not Shown) (Belgium Built Machines) **(Prior to SN 1300000731)**	
703A	4922641	1	Harness - On/Off Switch	1-A
703A	4460226	2	Socket, Female	
703B		Ref	Powermite Control Box to Relay	
703B	4922482	1	USA Built Machines with Caterpillar/Deutz/Ford/Perkins Engines **(SN 0300065080 through 0300087208)**	
703B	4922970	1	USA Built Machines with Caterpillar/Deutz/Ford/Perkins Engines **(SN 0300087209 through 0300123999)**	
703B	4923445	1	USA Built Machines With GM Engines	
703B	4922482	1	Belgium Built Machines **(Prior to SN 1300000316)**	
703B	4922970	1	Belgium Built Machines **(SN 1300000731 through 1300006000)**	
703C	4460321	1	Connector, Male - 4 Position (USA Built Machines) **(SN 0300087209 through 0300123999)**	
703C	4460321	1	Connector, Male - 4 Position (Belgium Built Machines) **(SN 1300000731 through 1300006000)**	
703C	4460906	4	Socket, Female	
703D	4460961	1	Connector, Female - 4 Position (USA Built Machines) **(SN 0300087209 through 0300123999)**	
703D	4460961	1	Connector, Female - 4 Position (Belgium Built Machines) **(SN 1300000731 through 1300006000)**	
703D	4460705	4	Pin, Male	
703E	7020193	1	Harness, Generator Power	
704		Ref	7500W Generator Electrical Components	
704	0274711	AR	Caterpillar Engines Machines 60Hz	B
704	0273160	AR	Deutz Engines Machines 60Hz	D
704	0273420	AR	Deutz Engines Machines 50Hz	C
704	0274288	AR	Ford Engines Machines 60Hz	A
704	0275035	AR	GM Engines Machines 60Hz	C
704	1001097400	AR	Perkins Engines Machines 60Hz	A
704	1001097401	AR	Perkins Engines Machines 50Hz	A
704A		Ref	Receptacle, Female Twist-Lock Options:	

ITEM	PART NUMBER	QTY	DESCRIPTION	REV
704A	4460958	1	Receptacle, Female Twist-Lock (60Hz Spec)	
704A	See Note	1	Receptacle, Female Twist-Lock (50Hz Spec) (Note: Not Available - Purchase Locally)	
704B		Ref	Gasket Options:	
704B	3960422	2	Gasket (60Hz Spec)	
704B	See Note	2	Gasket (50Hz Spec) (Note: Not Available - Purchase Locally)	
704C		Ref	Cover, Receptacle Options:	
704C	4060700	1	Cover, Receptacle (60Hz Spec)	
704C	See Note	1	Cover, Receptacle (50Hz Spec) (Note: Not Available - Purchase Locally)	
704D		Ref	Cover, Receptacle Options:	
704D	4061043	1	Cover, Receptacle (60Hz Spec)	
704D	See Note	1	Cover, Receptacle (50Hz Spec) (Note: Not Available - Purchase Locally)	
704E		Ref	Receptacle Options:	
704E	4460346	1	Cover, Receptacle (60Hz Spec)	
704E	See Note	1	Cover, Receptacle (50Hz Spec) (Note: Not Available - Purchase Locally)	
704F	4460051	1	Connector, Strain Relief	
704G	4460071	1	Connector, Strain Relief	
704H	4922925	1	Harness, Generator	A
704J	See Note	1	Plug, Male - 6 Position (Note: Not Available for Purchase)	
704J	See Note	6	Socket, Female (Note: Not Available for Purchase)	
704K	4460225	1	Plug, Male - 6 Position	
704K	4460226	6	Socket, Female	
704K	7026626	1	Receptacle, Female - 6 Position (Part of Generator)	
705		Ref	7500W SkyPower Generator Junction Box Components	
705	0861542	Ref	7500W SkyPower Generator Junction Box (60Hz Spec)	C
705	0861567	Ref	7500W SkyPower Generator Junction Box (50Hz Specs)	B
705A		Ref	Cable, Electrical 12/3	
705A	1060494	2 ft/.6m	Cable, Electrical 12/3 (60Hz Spec)	
705A	See Note	2 ft/.6m	Cable, Electrical 12/3 (50Hz Spec) (Note: Not Available - Purchase Locally)	
705B		Ref	Cable, Electrical 10/3	
705B	1060708	2.5 ft/.76m	Cable, Electrical 10/3 (60Hz Spec)	
705B	See Note	2.5 ft/.76m	Cable, Electrical 10/3 (50Hz Spec) (Note: Not Available - Purchase Locally)	
705C	1060343	1.5 ft/.46m	Cable, Electrical 10/4 (60Hz Spec Only)	
705D	4460425	2	Connector, Strain Relief	
705E		Ref	Component Options:	
705E	4460426	2	Connector, Strain Relief (60Hz Spec Only)	
705E	4460426	1	Connector, Strain Relief (50Hz Spec Only)	
705E	3520189	1	Plug (50Hz Spec Only)	
705F	1671092	1	Cover (60Hz Spec Only)	
705F	4460963	1	Connector (60Hz Spec Only)	
706		Ref	7500W Generator Electrical Diagram Components	
706	4933264	Ref	Caterpillar/Deutz/Perkins Engine Machines	C
706	4933316	Ref	Ford Engine Machines	1-A
706	4933349	Ref	GM Engine Machines	B
706A		Ref	Generator Harness Options:	
706A	4922757	1	Caterpillar/Deutz/Perkins Engine Machines	3-C

SECTION 7 - ELECTRICAL

ITEM	PART NUMBER	QTY	DESCRIPTION	REV
706A	4923199	1	Ford Engine Machines	1-A
706A	4923420	1	GM Engine Machines	A
706B	4460374	2	Plug, Sealed Relay	
706B	4460375	7	Terminal	
706C	4460967	1	Plug, Male - 3 Position	
706C	4460465	3	Socket, Female	
706D	2400060	AR	Fuseholder Options:	
706D		Ref	Caterpillar/Deutz/GM/Perkins Engine Machines	
706D		Ref	Ford Engine Machines	
706D	2400064	AR	Fuse - 5 Amp Options:	
706D		Ref	Caterpillar/Deutz/GM/Perkins Engine Machines	
706D		Ref	Ford Engine Machines	
706E	4460742	1	Plug, Male - 2 Position (GM Engine Only)	
706E	4460743	2	Socket, Female (GM Engine Only)	
706F	4922641	1	Switch Harness	
706G	4460226	2	Socket, Female	
707	0255917	1	Strobe Light Harness (Includes Strobe Light)	
707A	4460320	1	Connector, Female - 2 Position	
707A	4460267	2	Pin, Male	
708	0257887	1	Alarm Harness (Includes Alarm)	
708A	4460424	1	Plug, Male - 2 Position	
708A	4460268	2	Socket, Female	
709	See Note	1	Lights Harness (Note: Not Available for Purchase)	
709	1060341	37 ft /11.3m	Cable, Electrical - 16/2	
709A	3740049	1	Relay	
709A		Ref	Harness, Bag Options (Located at Ground Control Box) (Not Shown):	
709A	4922484	1	USA Built Machines **(SN 0300065080 through 0300065194)**	
709A	4922643	1	USA Built Machines **(SN 0300065195 through 0300123999)**	
709A	4922643	1	Belgium Built Machines	
711	See Note	1	Soft-Touch System Harness (Note: Not Available for Purchase)	
711A	1060341	AR	Cable, Electrical - 16/2 Options:	
711A		Ref	Cable, Electrical - 16/2 (2.5ft/.7m x 6ft/8m Platform)	
711A		Ref	Cable, Electrical - 16/2 (3ft/.9m x 6ft/8m Platform)	
711B	4460871	2	Socket, Female	
712	4933308	1	Floodlights Harness Components	1-A
712A	4460320	2	Plug, Male - 2 Position	
712A	4460227	4	Pin, Male	
712B	4922764	1	Floodlight Harness (Lights to Switch)	1-A
712C	4460424	2	Connector, Female - 2 Position	
712C	4460226	4	Socket, Female	
712D	4360232	1	Circuit Breaker - 15 Amp	
712E	1060977	1	Cord, 2 Wire Coiled (Console Box Circuit Breaker to Switch)	
712F	4460425	1	Connector, Strain Relief	
712G	4460459	1	Plug, Male - 3 Position	
712G	4460790	3	Socket, Female	
712G	4460789	3	Seal	
712H	4460476	1	Receptacle, Female	
712H	4460850	3	Pin, Male	
712H	4460790	3	Socket, Female	
712J	1060494	33	Electrical Cable 12/3 (Lower Boom to Aux Relay)	

ITEM	PART NUMBER	QTY	DESCRIPTION	REV
		ft/10.1m		
712K	1060494	47 ft/14.3m	Electrical Cable 12/3 (Upper Boom to Console Box)	
713		Ref	Platform Worklights Components	
713A	2920140	2	Platform Worklights External Harness (Includes Light and Wire Only)	
713B	4460459	1	Plug, Male - 3 Position	
713B	4460790	3	Socket, Female	
713B	4460789	3	Seal	
713C	4460476	1	Receptacle, Female	
713C	4460850	3	Pin, Male	
713C	4460790	3	Socket, Female	
713D	4460426	1	Connector, Strain Relief	
713E	2400070	1	Fuse	
713E	2400066	1	Holder, Fuse	
713F	1060987	1	Worklights Harness (Upper Boom to Worklights)	
713G	1060988	1	Worklights Harness (Lower Boom to Aux. Power Solenoid)	
		Ref	**TOOLS**	
801	7002821	1	Crimper (For Wire to Pin/Socket Connections) (Not Shown)	
802	7002823	1	Extractor (For Removal of Pin/Socket from Connectors) (Not Shown)	
803	4460467	1	Extractor, Pin (Blue 16-18 Gauge) (For Removal of Pin/Socket from Connectors) (Not Shown)	
804	4460510	1	Extractor, Pin (Yellow 12-14 Gauge) (For Removal of Pin/Socket from Connectors) (Not Shown)	
805	7002828	1	Stripper, Wire (Not Shown)	
806	2901443	1	Analyzer Kit (Not Shown)	
806A	1600244	1	Analyzer	
806B	1060633	1	Cable, Analyzer	1-A
806C	4460321	2	Plug, Male	
806C	4460226	8	Socket, Female	
807	1001137005	1	Kit, Software Cable	

SECTION 8 - DECALS

SECTION 8 - DECALS

FIGURE 8-1. DECAL INSTALLATION - ANSI SPEC (USA BUILT MACHINES) (SN 0300065080 through 0300069154)

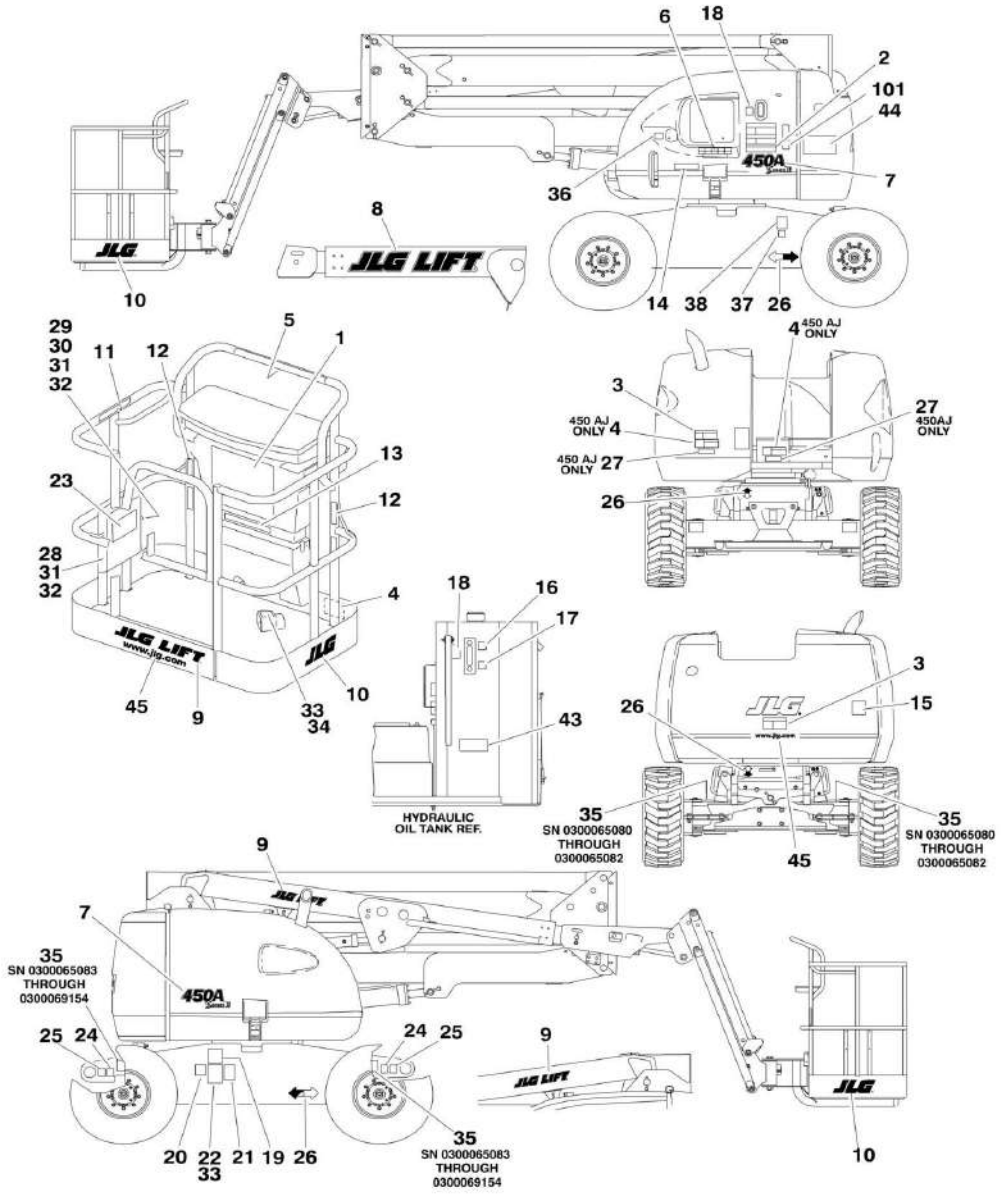

FIGURE 8-1. DECAL INSTALLATION - ANSI SPEC (USA BUILT MACHINES) (SN 0300065080 through 0300069154)

ITEM	PART NUMBER	QTY	DESCRIPTION	REV
		Ref	**STANDARD DECAL INSTALLATION**	
	0271168	Ref	**Standard Decal Installation 450A Series II**	2
	0271169	Ref	**Standard Decal Installation 450AJ Series II**	2
	0271241	Ref	**JLG Logo Decals**	2
1	1703797	1	Decal - Danger/Warning	
2	1703798	1	Decal - Danger/Warning	
3	1703805	2	Decal - Danger/Electrocution	
4	1703804	3	Decal - Warning/Crushing	
5	1702784	1	Decal - Legend	
6	1703808	1	Decal - Legend	
9	1702774	3	Decal - JLG Lift (3 1/2in)	
10	1702773	2	Decal - JLG (5in)	
11	1702868	2	Decal - No Hands	
12	1704277	3	Decal - Attach Lanyard Here	
13	1701645	1	Decal - 500LBS Max Capacity	
14	1702688	1	Decal - 500LBS Max Capacity	
15	3251813	1	Decal - USA	
16	1701502	1	Decal - High Oil Level	
17	1701503	1	Decal - Low Oil Level	
18	1701504	2	Decal - Hydraulic Oil	
19	1702153	1	Decal - Inspection	
20	See Note	1	Decal - Bar Code (Note: Not available for purchase)	
21	1700584	1	Decal - Patent	
22	See Note	1	Nameplate - Serial Number (Note: Not available for purchase)	
23	1701509	1	Decal - Manual	
24	1702300	4	Decal - Tie Down/Lift	
25	1701500	4	Decal - Tie Down/Lift	
26	1701529	4	Decal- Arrow	
27		Ref	Nameplate Options:	
27	3251243	1	Nameplate (120V-60Hz)	
27	3252507	1	Nameplate (220V-/5060Hz)	
28	0860520	1	Box, Manual Storage	
29	1060279	1	Cable, Lanyard	
30	0641408	1	Bolt 1/4in-20NC x 1in	
31	4751400	6	Flatwasher 1/4in Regular	
32	3311405	5	Locknut 1/4in-20NC	
33	3820001	AR	Rivet	
34	3252347	1	Decal - Footswitch (Part of 4360031 Footswitch)	
35	1703486	4	Decal - Max Tire Load	
36		Ref	Decal - Fuel	
36	1701542	1	Gas Engine Machines	
36	1701505	1	Diesel Engine Machines	
37		Ref	Decal - LPG Gas (Dual Fuel Machines Only)	
37	Not Required	1	Non-Dual Fuel Machines	
37	1701543	1	Dual Fuel Machines	
38	1700818	1	Decal - LP (Dual Fuel Machines Only)	
43	1704412	1	Decal - Hydraulic Fluid	
44	3252768	1	Decal - Lift Diagram	
45	1704885	2	Decal - Website	

SECTION 8 - DECALS

ITEM	PART NUMBER	QTY	DESCRIPTION	REV
	0272341	Ref	**TIRE SEALANT DECAL INSTALLATIONS**	1
101	1705363	1	Decal - Tire Sealant	

SECTION 8 - DECALS

FIGURE 8-2. DECAL INSTALLATION - ANSI SPEC (USA BUILT MACHINES AND BELGIUM BUILT MACHINES) (SN 0300069155 through 0300123999, SN 1300000001 through 1300006000)

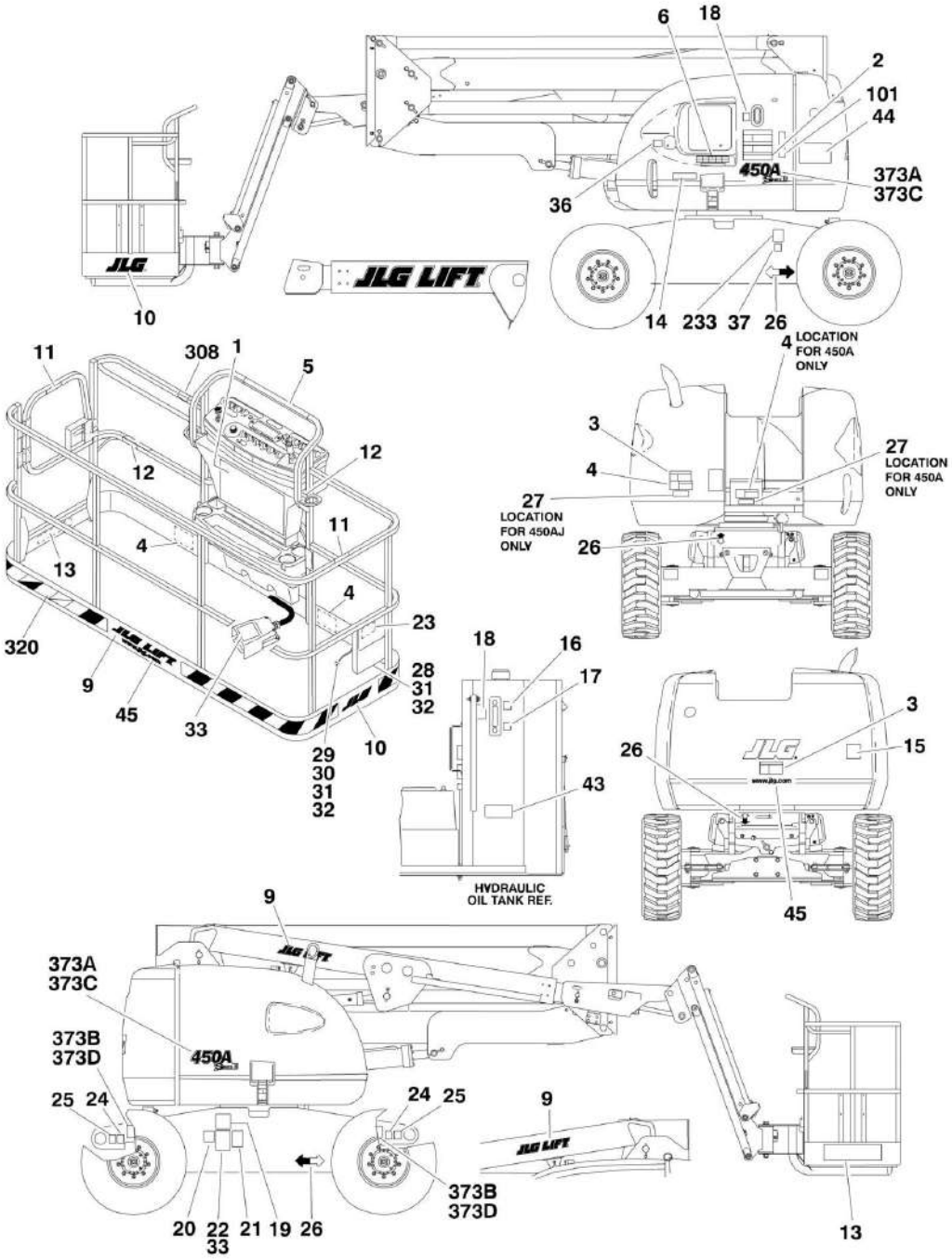

FIGURE 8-2. DECAL INSTALLATION - ANSI SPEC (USA BUILT MACHINES AND BELGIUM BUILT MACHINES) (SN 0300069155 through 0300123999, SN 1300000001 through 1300006000)

ITEM	PART NUMBER	QTY	DESCRIPTION	REV
		Ref	**STANDARD DECAL INSTALLATION**	
	0272573	Ref	**450A/AJ Series II**	7
	0272530	Ref	**JLG Logo Decals**	1
1	1703797	1	Decal - Danger/Warning	
2	1703798	1	Decal - Danger/Warning	
3	1703805	2	Decal - Danger/Electrocution	
4	1703804	3	Decal - Warning/Crushing	
5		Ref	Decal - Legend Options:	
5	1702784	1	USA Built Machines **(SN 0300069155 through 0300099084)**	
5	1706931	1	USA Built Machines **(SN 0300099085 through 0300123999)**	
5	1702784	1	Belgium Built Machines **(SN 1300000001 through 1300002603)**	
5	1706931	1	Belgium Built Machines **(SN 1300002604 through 1300006000)**	
6		Ref	Decal - Legend Options:	
6	1703808	1	USA Built Machines **(SN 0300069155 through 0300099084)**	
6	1706941	1	USA Built Machines **(SN 0300099085 through 0300123999)**	
6	1703808	1	Belgium Built Machines **(SN 1300000001 through 1300002603)**	
6	1706941	1	Belgium Built Machines **(SN 1300002604 through 1300006000)**	
9	1702774	3	Decal - JLG Lift (3 1/2in)	
10	1702773	2	Decal - JLG (5in)	
11	1702868	2	Decal - No Hands	
12	1704277	3	Decal - Attach Lanyard Here	
13	1701645	1	Decal - Max Capacity	
14		Ref	Decal - Max Capacity	
14	1702688	1	USA Built Machines **(SN 0300069155 through 0300100315)**	
14	1707013	1	USA Built Machines **(SN 0300100316 through 0300123999)**	
14	1702688	1	Belgium Built Machines **(SN 1300000001 through 1300002600)**	
14	1707013	1	Belgium Built Machines **(SN 1300002601 through 1300006000)**	
15	3251813	1	Decal - USA	
16	1701502	1	Decal - High Oil Level	
17	1701503	1	Decal - Low Oil Level	
18	1701504	2	Decal - Hydraulic Oil	
19	1702153	1	Decal - Inspection	
20	See Note	1	Decal - Bar Code (Note: Not available for purchase)	
21	1700584	1	Decal - Patent	
22	See Note	1	Nameplate - Serial Number (Note: Not available for purchase)	
23	1701509	1	Decal - Manual	
24	1702300	4	Decal - Tie Down /Lift	
25	1701500	4	Decal - Tie Down /Lift	
26	1701529	4	Decal- Arrow	
27	3251243	1	Nameplate 120V-60Hz	
28	0860520	1	Box, Manual Storage	
29	1060279	1	Cable, Lanyard	
30	0641408	1	Bolt 1/4in-20NC x 1in	
31	4751400	6	Flatwasher 1/4in Regular	

SECTION 8 - DECALS

ITEM	PART NUMBER	QTY	DESCRIPTION	REV
32	3311405	5	Locknut 1/4in-20NC	
33	3820001	AR	Rivet	
36		Ref	Decal - Fuel	
36	1701542	1	Gas Engine Machines	
36	1701505	1	Diesel Engine Machines	
37		Ref	Decal - LPG Gas (Dual Fuel Machines Only)	
37	Not Required	0	Non-Dual Fuel Machines	
37	1701543	1	Dual Fuel Machines	
43	1704412	1	Decal - Hydraulic Fluid	
44	3252768	1	Decal - Lift Diagram	
45	1704885	2	Decal - Website	
46	0641406	4	Bolt, 1/4in-20NC x 3/4in (Not Shown)	
	0272341	Ref	**TIRE SEALANT DECAL INSTALLATIONS**	1
101	1705363	1	Decal - Tire Sealant	
	0010578	Ref	**DECAL OPTIONS**	
233	1700818	1	Decal - LP (Dual Fuel Machines Only)	
308		Ref	Decal - Warning Prop Options:	
308	1702962	1	Diesel Machines	
308	1702961	1	Gas Machines	
320	0272165	Ref	**Warning Stripe Decal Installation**	
320	4420051	21.7 ft /6.61m	Decal - Warning Stripes	
373		Ref	**Model Designation Decal Installation Options**	
373	0272580	Ref	**450A Series II**	2
373B	1703486	4	Decal - Max Tire Load	
373	0272581	Ref	**450AJ Series II**	2
373D	1703486	4	Decal - Max Tire Load	

FIGURE 8-3. DECAL INSTALLATION - ANSI EXPORT SPECS (USA BUILT MACHINES) (SN 0300065080 through 0300069154)

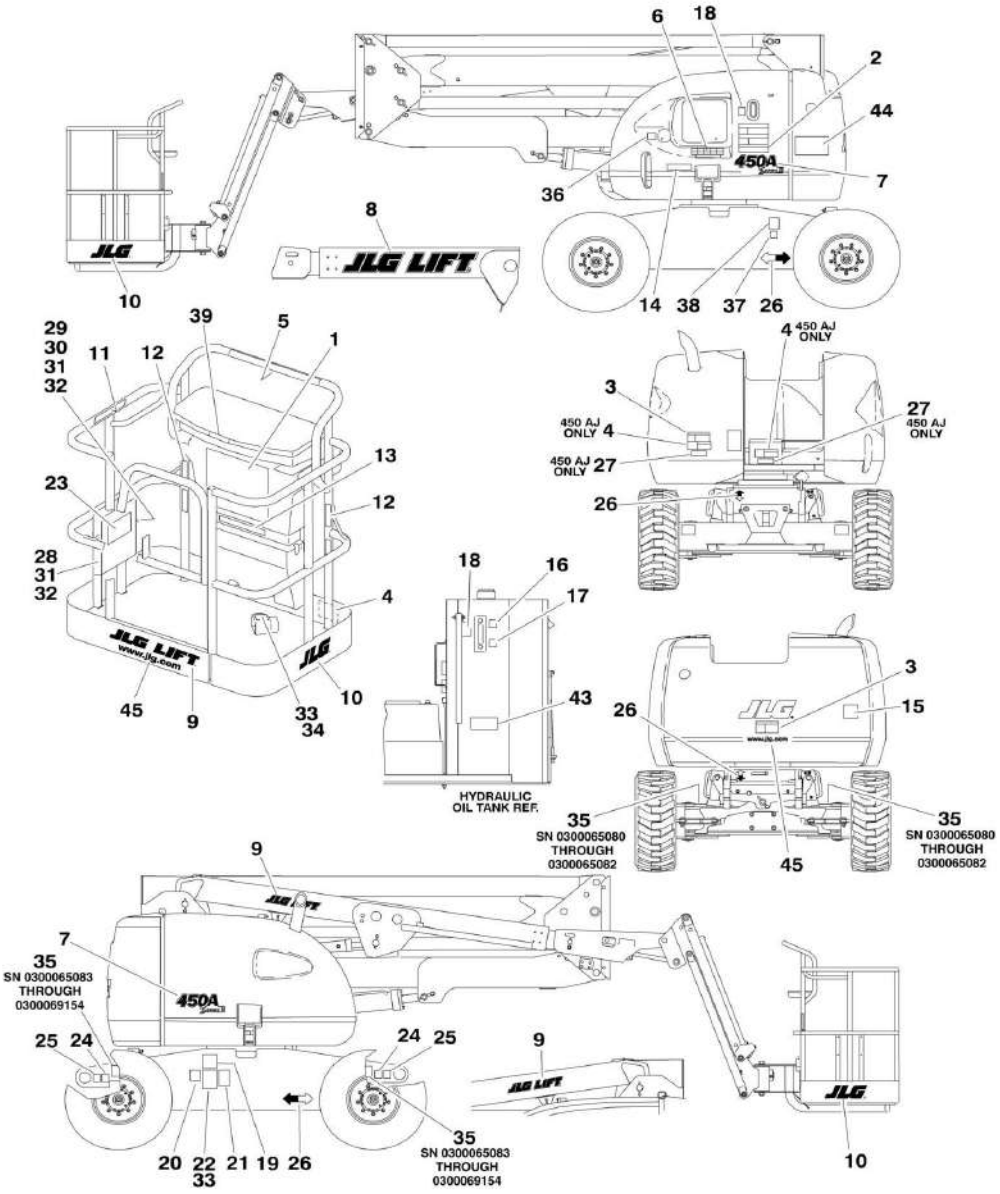

FIGURE 8-3. DECAL INSTALLATION - ANSI EXPORT SPECS (USA BUILT MACHINES) (SN 0300065080 through 0300069154)

ITEM	PART NUMBER	QTY	DESCRIPTION	REV
		Ref	**DECAL INSTALLATIONS**	
	0271194	Ref	**450A Series II Brazil Spec (Spanish/Portuguese)**	1
	0271192	Ref	**450A Series II Chinese Spec (English/Chinese)**	1
	0271190	Ref	**450A Series II CSA Spec (English/French)**	1
	0271184	Ref	**450A Series II Japanese Spec**	1
	0271186	Ref	**450A Series II Korean Spec**	1
	0271188	Ref	**450A Series II Latin America Spec (English/Spanish)**	1
	0271195	Ref	**450AJ Series II Brazil Spec (Spanish/Portuguese)**	1
	0271191	Ref	**450AJ Series II CSA Spec (English/French)**	1
	0271193	Ref	**450AJ Series II Chinese Spec (English/Chinese)**	1
	0271185	Ref	**450AJ Series II Japanese Spec**	1
	0271187	Ref	**450AJ Series II Korean Spec**	1
	0271189	Ref	**450AJ Series II Latin America Spec (English/Spanish)**	1
	0271241	Ref	**JLG Logo Decals**	2
1		Ref	Decal - Danger/Warning Options:	
1	1703928	1	Brazil Spec	
1	1703925	1	Chinese Spec	
1	1703924	1	CSA Spec	
1	1703926	1	Japanese Spec	
1	1703927	1	Korean Spec	
1	1703923	1	Latin American Spec	
2		Ref	Decal - Danger/Warning Options:	
2	1703934	1	Brazil Spec	
2	1703931	1	Chinese Spec	
2	1703930	1	CSA Spec	
2	1703932	1	Japanese Spec	
2	1703933	1	Korean Spec	
2	1703929	1	Latin American Spec	
3		Ref	Decal - Danger Electrocution Options:	
3	1703940	2	Brazil Spec	
3	1703937	2	Chinese Spec	
3	1703936	2	CSA Spec	
3	1703938	2	Japanese Spec	
3	1703939	2	Korean Spec	
3	1703935	2	Latin American Spec	
4		Ref	Decal - Warning/Crushing	
4	1703952	3	Brazil Spec	
4	1703949	3	Chinese Spec	
4	1703948	3	CSA Spec	
4	1703950	3	Japanese Spec	
4	1703951	3	Korean Spec	
4	1703947	3	Latin American Spec	
5		Ref	Decal - Legend Options:	
5	Not Required	0	Brazil/ Chinese/ Japanese/ Korean Spec	
5	1702784	1	CSA/Latin America Spec	
6		Ref	Decal - Legend Options:	
6	Not Required	0	Brazil/ Chinese/ Japanese/ Korean Spec	
6	1703808	AR	CSA/Latin American Spec	
9	1702774	3	Decal - Lift (3 1/2in)	

SECTION 8 - DECALS

ITEM	PART NUMBER	QTY	DESCRIPTION	REV
10	1702773	2	Decal - JLG (5 in)	
11		Ref	Decal - No Hands Options:	
11	1704002	2	Brazil Spec	
11	Not Required	0	Chinese/ Japanese/ Korean Spec	
11	1704000	2	CSA Spec	
11	1704001	2	Latin American Spec	
12	1704277	3	Decal - Attach Lanyard	
13	1703996	1	Decal - 500LBS Max Capacity	
14	1704112	1	Decal - 500LBS Max Capacity	
15		Ref	Decal - USA Options:	
15	3251813	1	Brazil/CSA/Latin American Spec	
15	Not Required	0	Chinese/Japanese/Korean Spec	
16	1701502	1	Decal - High Oil Level	
17	1701503	1	Decal - Low Oil Level	
18	1701504	2	Decal - Hydraulic Oil	
19		Ref	Decal - Inspection Options:	
19	1704008	1	Brazil Spec	
19	1704006	1	CSA Spec	
19	1704007	1	Latin American Spec	
19	Not Required	0	Chinese/ Japanese/ Korean Spec	
20	See Note	1	Decal - Bar Code (Note: Not available for purchase)	
21	1700584	1	Decal - Patent	
22	See Note	1	Nameplate - Serial Number (Note: Not available for purchase)	
23	1701509	1	Decal - Manual	
24	1702300	4	Decal - Tie Down /Lift	
25	1701500	4	Decal - Tie Down /Lift	
26	1701529	4	Decal - Arrow	
27		Ref	Decal Options:	
27	3251243	1	120V-60Hz - Brazil/ CSA/ Latin American Spec	
27	3252507	1	220V-50/60Hz - Brazil/ CSA/ Latin American Spec	
27	Not Required	0	Chinese/ Japanese/ Korean Spec	
28	0860520	1	Box, Manual Storage	
29	1060279	1	Cable, Lanyard	
30	0641408	1	Bolt 1/4in-20NC x 1in	
31	4751400	6	Flatwasher 1/4in Regular	
32	3311405	5	Locknut 1/4in-20NC	
33	3820001	8	Rivet	
34		Ref	Decal - Footswitch Options:	
34	1703985	1	Brazil Spec	
34	1703982	1	Chinese Spec	
34	1703984	1	CSA Spec	
34	1703980	1	Japanese Spec	
34	1703981	1	Korean Spec	
34	1703983	1	Latin American Spec	
35	1703486	4	Decal - Maximum Tire Load	
36		Ref	Decal - Fuel Options:	
36	1701542	1	Gas Engine Machines	
36	1701505	1	Diesel Engine Machines	
37		Ref	Decal - LPG Gas (Dual Fuel Machines Only)	
37	Not Required	0	Non-Dual Fuel Machines	
37	1701543	1	Dual Fuel Machines	

ITEM	PART NUMBER	QTY	DESCRIPTION	REV
38		Ref	Decal - LP Gas Liquid Withdrawal System (Dual Fuel Machines Only)	
38	Not Required	0	Non-Dual Fuel Machines	
38	1700818	1	Dual Fuel Machines (English Language)	
38	1704271	1	Dual Fuel Machines (CSA Spec)	
38	1702720	1	Dual Fuel Machines (Spanish Language)	
39		Ref	Decal - CSA Options:	
39	3252221	1	CSA Spec	
39	Not Required	0	Brazil/ Chinese/ Japanese/ Korean/ Latin American Spec	
43	1704412	1	Decal - Hydraulic Fluid	
44	3252768	1	Decal - Lift Diagram	
45	1704885	2	Decal - Website	

FIGURE 8-4. DECAL INSTALLATION - ANSI EXPORT SPECS (USA BUILT MACHINES AND BELGIUM BUILT MACHINES) (SN 0300069155 through 0300123999, SN 1300000001 through 1300006000)

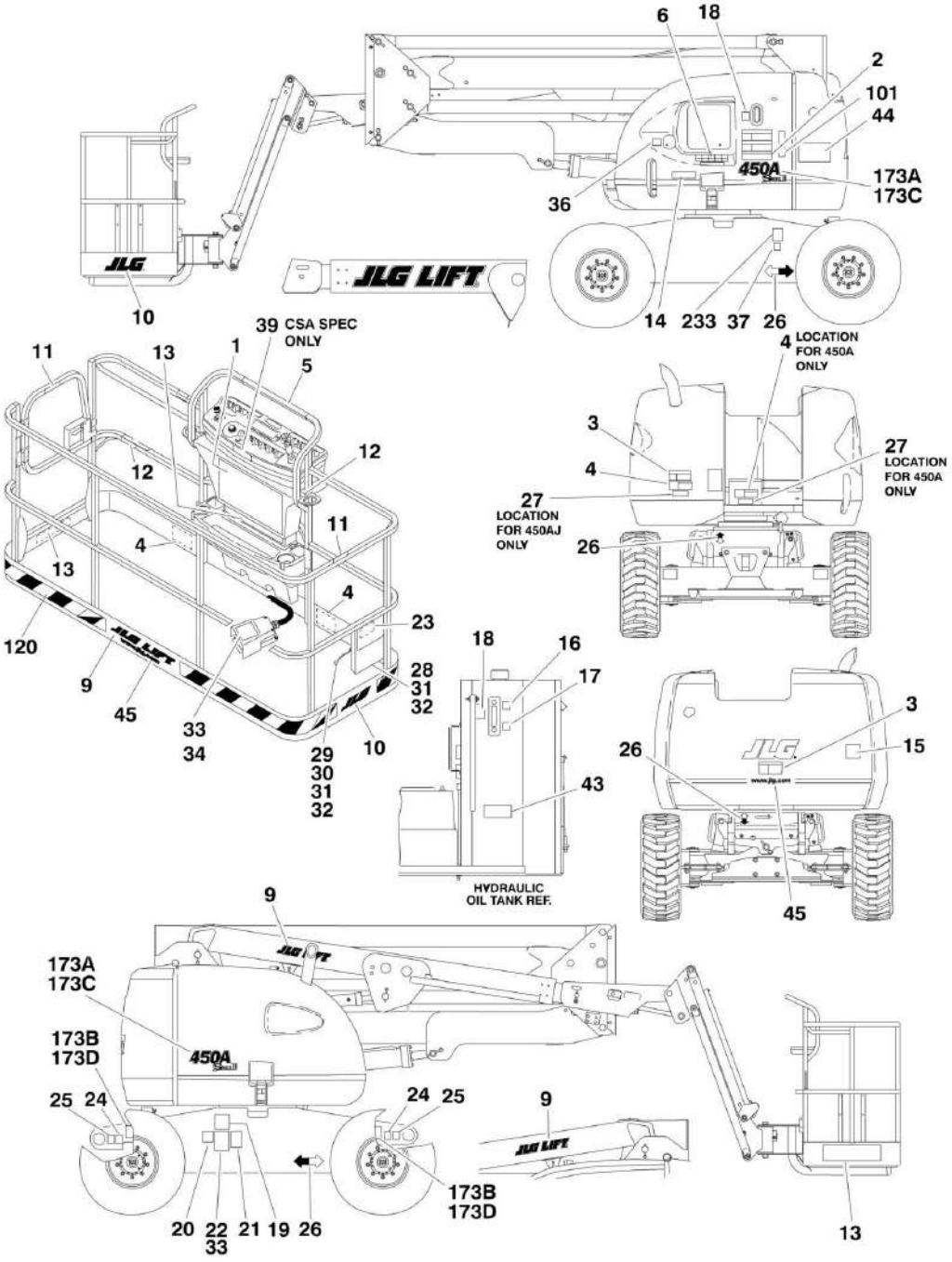

FIGURE 8-4. DECAL INSTALLATION - ANSI EXPORT SPECS (USA BUILT MACHINES AND BELGIUM BUILT MACHINES) (SN 0300069155 through 0300123999, SN 1300000001 through 1300006000)

ITEM	PART NUMBER	QTY	DESCRIPTION	REV
		Ref	**DECAL INSTALLATIONS**	
	0272579	Ref	**450A/AJ Series II Brazil Spec (Spanish/Portuguese)**	8
	0272578	Ref	**450A/AJ Series II Chinese Spec (English/Chinese)**	7
	0272577	Ref	**450A/AJ Series II CSA Spec (English/French)**	8
	0272575	Ref	**450A/AJ Series II Japanese Spec**	7
	0272576	Ref	**450A/AJ Series II Korean Spec**	7
	0271189	Ref	**450A/AJ Series II Latin America Spec (English/Spanish)**	2
	0272530	Ref	**JLG Logo Decals**	2
1		Ref	Decal - Danger/Warning Options:	
1	1703928	1	Brazil Spec	
1	1703925	1	Chinese Spec	
1	1703924	1	CSA Spec	
1	1703926	1	Japanese Spec	
1	1703927	1	Korean Spec	
1	1703923	1	Latin American Spec	
2		Ref	Decal - Danger/Warning Options:	
2	1703934	1	Brazil Spec	
2	1703931	1	Chinese Spec	
2	1703930	1	CSA Spec	
2	1703932	1	Japanese Spec	
2	1703933	1	Korean Spec	
2	1703929	1	Latin American Spec	
3		Ref	Decal - Danger Electrocution Options:	
3	1703940	2	Brazil Spec	
3	1703937	2	Chinese Spec	
3	1703936	2	CSA Spec	
3	1703938	2	Japanese Spec	
3	1703939	2	Korean Spec	
3	1703935	2	Latin American Spec	
4		Ref	Decal - Warning/Crushing	
4	1703952	3	Brazil Spec	
4	1703949	3	Chinese Spec	
4	1703948	3	CSA Spec	
4	1703950	3	Japanese Spec	
4	1703951	3	Korean Spec	
4	1703947	3	Latin American Spec	
5		Ref	Decal - Legend Options:	
5	Not Required	0	Brazil/ Chinese/ Japanese/ Korean Spec	
5	1702784	1	CSA/Latin America Spec **(Prior to SN 1300002605)**	
5	1706931	1	CSA/Latin America Spec **(SN 1300002605 through 1300006000)**	
6		Ref	Decal - Legend Options:	
6	Not Required	0	Brazil/ Chinese/ Japanese/ Korean Spec	
6	1703808	AR	CSA/Latin American Spec **(Prior to SN 1300002605)**	
6	1706941	AR	CSA/Latin America Spec **(SN 1300002605 through 1300006000)**	
9	1702774	3	Decal - Lift (3 1/2in)	
10	1702773	2	Decal - JLG (5 in)	
11		Ref	Decal - No Hands Options:	

SECTION 8 - DECALS

ITEM	PART NUMBER	QTY	DESCRIPTION	REV
11	1704002	2	Brazil Spec	
11	Not Required	0	Chinese/Japanese Spec	
11	1704000	2	CSA Spec	
11	1705969	2	Korean Spec	
11	1704001	2	Latin American Spec	
12	1704277	3	Decal - Attach Lanyard	
13		Ref	Decal - Max Capacity	
13	1703996	2	Brazil Spec USA Built Machines **(SN 0300069155 through 0300100315)**	
13	1703996	2	Brazil Spec Belgium Built Machines **(Prior to SN 1300002601)**	
13	1707134	2	Brazil Spec USA Built Machines **(SN 0300100316 through 0300123999)**	
13	1707134	2	Brazil Spec Belgium Built Machines **(SN 1300002601 through 1300006000)**	
13	1703996	2	Chinese Spec USA Built Machine **(SN 0300069155 through 0300100315)**	
13	1703996	2	Chinese Spec Belgium Built Machines **(Prior to SN 1300002601)**	
13	1707060	2	Chinese Spec USA Built Machines **(SN 0300100316 through 0300123999)**	
13	1707060	2	Chinese Spec Belgium Built Machines **(SN 1300002601 through 1300006000)**	
13	1703996	2	CSA Spec USA Built Machines **(SN 0300069155 through 0300100315)**	
13	1703996	2	CSA Spec Belgium Built Machines **(Prior to SN 1300002601)**	
13	1707055	2	CSA Spec USA Built Machines **(SN 0300100316 through 0300123999)**	
13	1707055	2	CSA Spec Belgium Built Machines **(SN 1300002601 through 1300006000)**	
13	1703996	2	Japanese Spec USA Built Machines **(SN 0300069155 through 0300100315)**	
13	1703996	2	Japanese Spec Belgium Built Machines **(Prior to SN 1300002601)**	
13	1707059	2	Japanese Spec USA Built Machines **(SN 0300100316 through 0300123999)**	
13	1707059	2	Japanese Spec Belgium Built Machines **(SN 1300002601 through 1300006000)**	
13	1703996	2	Korean Spec USA Built Machines **(SN 0300069155 through 0300100315)**	
13	1703996	2	Korean Spec Belgium Built Machines **(Prior to SN 1300002601)**	
13	1707058	2	Korean Spec USA Built Machines **(SN 0300100316 through 0300123999)**	
13	1707058	2	Korean Spec Belgium Built Machines **(SN 1300002601 through 1300006000)**	
13	1703996	2	Latin American Spec USA Built Machines **(SN 0300069155 through 0300102727)**	
13	1703996	2	Latin American Spec Belgium Built Machines **(Prior to SN 1300002775)**	
13	1707056	2	Latin American Spec USA Built Machines **(SN 0300102728 through 0300123999)**	
13	1707056	2	Latin American Spec Belgium Built Machines **(SN 1300002775 through 1300006000)**	
14		Ref	Decal - Max Capacity Options:	
14	1704112	1	Brazil Spec USA Built Machines **(SN 0300069155 through 0300100554)**	

ITEM	PART NUMBER	QTY	DESCRIPTION	REV
14	1704112	1	Brazil Spec Belgium Built Machines **(Prior to SN 1300002385)**	
14	1707133	1	Brazil Spec USA Built Machines **(SN 0300100555 through 0300123999)**	
14	1707133	1	Brazil Spec Belgium Built Machines **(SN 1300002385 through 1300006000)**	
14	Not Required	0	Chinese Spec USA Built Machines **(SN 0300069155 through 0300100315)**	
14	Not Required	0	Chinese Spec Belgium Built Machines **(Prior to SN 1300002601)**	
14	1707044	1	Chinese Spec USA Built Machines **(SN 0300100316 through 0300123999)**	
14	1707044	1	Chinese Spec Belgium Built Machines **(SN 1300002601 through 1300006000)**	
14	1704112	1	CSA Spec USA Built Machines **(SN 030009155 through 0300100315)**	
14	1704112	1	CSA Spec Belgium Built Machines **(Prior to SN 1300002601)**	
14	1707047	1	CSA Spec USA Built Machines **(SN 0300100316 through 0300123999)**	
14	1707047	1	CSA Spec Belgium Built Machines **(SN 1300002601 through 1300006000)**	
14	Not Required	0	Japanese Spec USA Built Machines **(SN 0300069155 through 1300002385)**	
14	1707054	1	Japanese Spec USA Built Machines **(SN 0300100555 through 0300123999)**	
14	1707054	1	Japanese Spec Belgium Built Machines **(SN 1300002385 through 1300006000)**	
14	Not Required	0	Korean Spec USA Built Machines **(SN 0300069155 through 0300100315)**	
14	Not Required	0	Korean Spec Belgium Built Machines **(Prior to SN 1300002601)**	
14	1705042	1	Korean Spec USA Built Machines **(SN 0300100316 through 0300123999)**	
14	1705042	1	Korean Spec Belgium Built Machines **(SN 1300002601 through 1300006000)**	
14	1704112	1	Latin American Spec USA Built Machines **(SN 0300069155 through 0300102727)**	
14	1704112	1	Latin American Spec Belgium Built Machines **(Prior to SN 1300002775)**	
14	1707049	1	Latin American Spec USA Built Machines **(SN 0300102728 through 0300123999)**	
14	1707049	1	Latin American Spec Belgium Built Machines **(SN 1300002775 through 1300006000)**	
15		Ref	Decal - USA Options:	
15	3251813	1	Brazil/ CSA/ Latin American Spec	
15	Not Required	0	Chinese/ Japanese/ Korean Spec	
16	1701502	1	Decal - High Oil Level	
17	1701503	1	Decal - Low Oil Level	
18	1701504	2	Decal - Hydraulic Oil	
19		Ref	Decal - Inspection Options:	
19	1704008	1	Brazil Spec	
19	1704006	1	CSA Spec	
19	1704007	1	Latin American Spec	
19	Not Required	0	Chinese/Japanese/Korean Spec	
20	See Note	1	Decal - Bar Code (Note: Not available for purchase)	
21	1700584	1	Decal - Patent	
22	See Note	1	Nameplate - Serial Number (Note: Not available for purchase)	

SECTION 8 - DECALS

ITEM	PART NUMBER	QTY	DESCRIPTION	REV
23	1701509	1	Decal - Manual	
24	1702300	4	Decal - Tie Down /Lift	
25	1701500	4	Decal - Tie Down /Lift	
26	1701529	4	Decal - Arrow	
27		Ref	Decal Options:	
27	3251243	1	120V-60Hz - Brazil/ CSA/ Latin American Spec	
27	Not Required	0	Chinese/ Japanese/ Korean Spec	
28	0860520	1	Box, Manual Storage	
29	1060279	1	Cable, Lanyard	
30	0641408	1	Bolt 1/4in-20NC x 1in	
31	4751400	6	Flatwasher 1/4in Regular	
32	3311405	5	Locknut 1/4in-20NC	
33	3820001	AR	Rivet	
34		Ref	Decal - Footswitch Options:	
34	1703985	1	Brazil Spec	
34	1703982	1	Chinese Spec	
34	1703984	1	CSA Spec	
34	1703980	1	Japanese Spec	
34	1703981	1	Korean Spec	
34	1703983	1	Latin American Spec	
36		Ref	Decal - Fuel Options:	
36	1701542	1	Gas Engine Machines	
36	1701505	1	Diesel Engine Machines	
37		Ref	Decal - LPG Gas (Dual Fuel Machines Only)	
37	Not Required	0	Non-Dual Fuel Machines	
37	1701543	1	Dual Fuel Machines	
38		Ref	Decal - LP Gas Liquid Withdrawal System (Dual Fuel Machines Only)	
38	Not Required	0	Non-Dual Fuel Machines	
38	1700818	1	Dual Fuel Machines (English Language)	
38	1704271	1	Dual Fuel Machines (CSA Spec)	
38	1702720	1	Dual Fuel Machines (Spanish Language)	
39		Ref	Decal - CSA Options:	
39	1705514	1	CSA Spec	
39	Not Required	0	Brazil/ Chinese/ Japanese/ Korean/ Latin American Spec	
43	1704412	1	Decal - Hydraulic Fluid	
44	3252768	1	Decal - Lift Diagram	
45	1704885	2	Decal - Website	
46	0641406	4	Bolt, 1/4in-20NC x 3/4in (Not Shown)	
	0010578	Ref	**DECAL OPTIONS**	
120	0272165	Ref	**Warning Stripe Decal Installation**	
120	4420051	21.7 ft /6.61m	Decal - Warning Stripes	
173		Ref	**Model Designation Decal Installation Options**	
173	0272580	Ref	**450A Series II**	2
173B	1703486	4	Decal - Max Tire Load	
173	0272581	Ref	**450AJ Series II**	2
173D	1703486	4	Decal - Max Tire Load	

FIGURE 8-5. DECAL INSTALLATION - CE AND AUSTRALIAN SPECS (USA BUILT MACHINES) (SN 0300065080 through 0300069154)

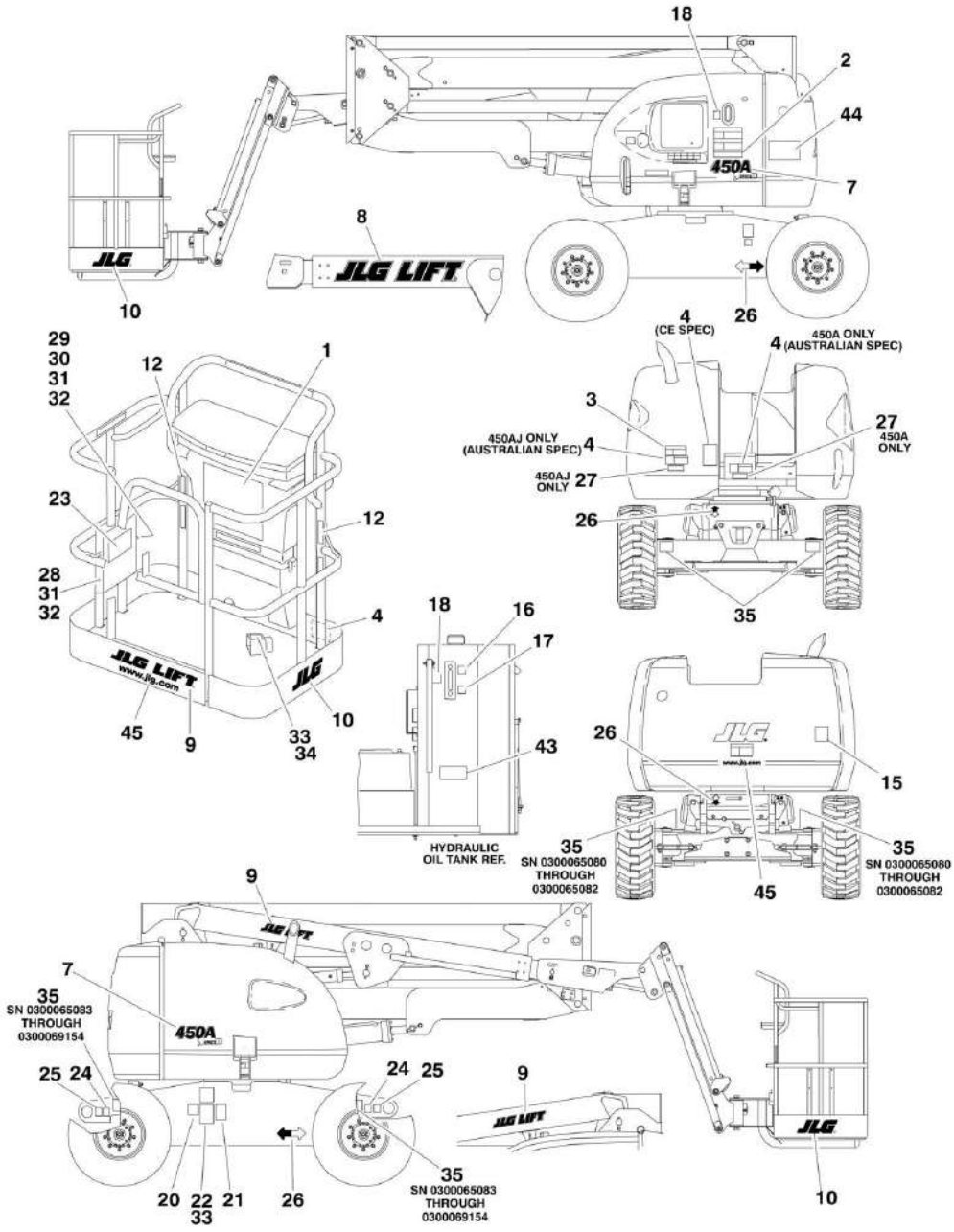

FIGURE 8-5. DECAL INSTALLATION - CE AND AUSTRALIAN SPECS (USA BUILT MACHINES) (SN 0300065080 through 0300069154)

ITEM	PART NUMBER	QTY	DESCRIPTION	REV
		Ref	**DECAL INSTALLATIONS**	
	0271170	Ref	**450A Series II Australian Spec**	1
	0271176	Ref	**450A Series II Dutch Spec**	2
	0271180	Ref	**450A Series II French Spec**	2
	0271174	Ref	**450A Series II German Spec**	2
	0271178	Ref	**450A Series II Italian Spec**	2
	0271182	Ref	**450A Series II Spanish Spec**	2
	0271172	Ref	**450A Series II UK Spec**	2
	0271171	Ref	**450AJ Series II Australian Spec**	1
	0271177	Ref	**450AJ Series II Dutch Spec**	2
	0271181	Ref	**450AJ Series II French Spec**	2
	0271175	Ref	**450AJ Series II German Spec**	2
	0271179	Ref	**450AJ Series II Italian Spec**	2
	0271183	Ref	**450AJ Series II Spanish Spec**	2
	0271173	Ref	**450AJ Series II UK Spec**	2
	0271241	Ref	**JLG Logo Decals**	2
1		Ref	Decal - Danger/Warning Options:	
1	1703992	1	Australian Spec	
1	1704809	1	Dutch Spec	
1	1704811	1	French Spec	
1	1704767	1	German Spec	
1	1704810	1	Italian Spec	
1	1704812	1	Spanish Spec	
1	1704808	1	UK Spec	
2		Ref	Decal - Danger/Warning Options:	
2	1704819	1	Australian Spec	
2	1704821	1	Dutch Spec	
2	1704823	1	French Spec	
2	1704820	1	German Spec	
2	1704822	1	Italian Spec	
2	1704824	1	Spanish Spec	
2	1704819	1	UK Spec	
4	1701518	3	Decal - Warning/Crushing	
7		Ref	Decal - Model Options:	
7	1704951	2	Decal (450A Series II)	
7	1704957	2	Decal (450AJ Series II)	
9	1702774	3	Decal - Lift (3 1/2in)	
10	1702773	2	Decal - JLG (5 in)	
12	1704277	3	Decal - Attach Lanyard	
15	1705084	1	Decal - Sound Power Level (Not Required - Australian Spec)	
16	1701502	1	Decal - High Oil Level	
17	1701503	1	Decal - Low Oil Level	
18	1701504	2	Decal - Hydraulic Oil	
20	See Note	1	Decal - Bar Code (Note: Not Available for Purchase)	
21	1700584	1	Decal - Patent	
22	See Note	1	Nameplate - Serial Number (Note: Not Available for Purchase)	
23	1701509	1	Decal - Manual	
24	1702300	4	Decal - Tie Down /Lift	
25	1701500	4	Decal - Tie Down /Lift	

SECTION 8 - DECALS

ITEM	PART NUMBER	QTY	DESCRIPTION	REV
26	1701529	4	Decal - Arrow	
27		Ref	Decal Options:	
27	3251242	1	Decal (240V-50Hz - Australian Spec)	
27	Not Required	0	All Other Specs	
28	0860520	1	Box, Manual Storage	
29	1060279	1	Cable, Lanyard	
30	0641408	1	Bolt 1/4in-20NC x 1in	
31	4751400	6	Flatwasher 1/4in Regular	
32	3311405	5	Locknut 1/4in-20NC	
33	3820001	8	Rivet	
34		Ref	Decal - Footswitch Options:	
34	3252347	1	Australian Spec	
34	1703518	1	Dutch Spec	
34	1693292	1	French Spec	
34	1693294	1	German Spec	
34	1701600	1	Italian Spec	
34	1701791	1	Spanish Spec	
34	3252347	1	UK Spec	
35	1703486	4	Decal - Maximum Tire Load	
36	1701505	1	Decal - Fuel	
43	1704412	1	Decal - Hydraulic Fluid	
44	3252768	1	Decal - Lift Diagram	
45	1704885	2	Decal - Website	

SECTION 8 - DECALS

FIGURE 8-6. DECALS INSTALLATION - AUSTRALIAN AND CE SPECS (USA BUILT MACHINES AND BELGIUM BUILT MACHINES) (SN 0300069155 through 0300074818, SN 1300000001 through 1300000180)

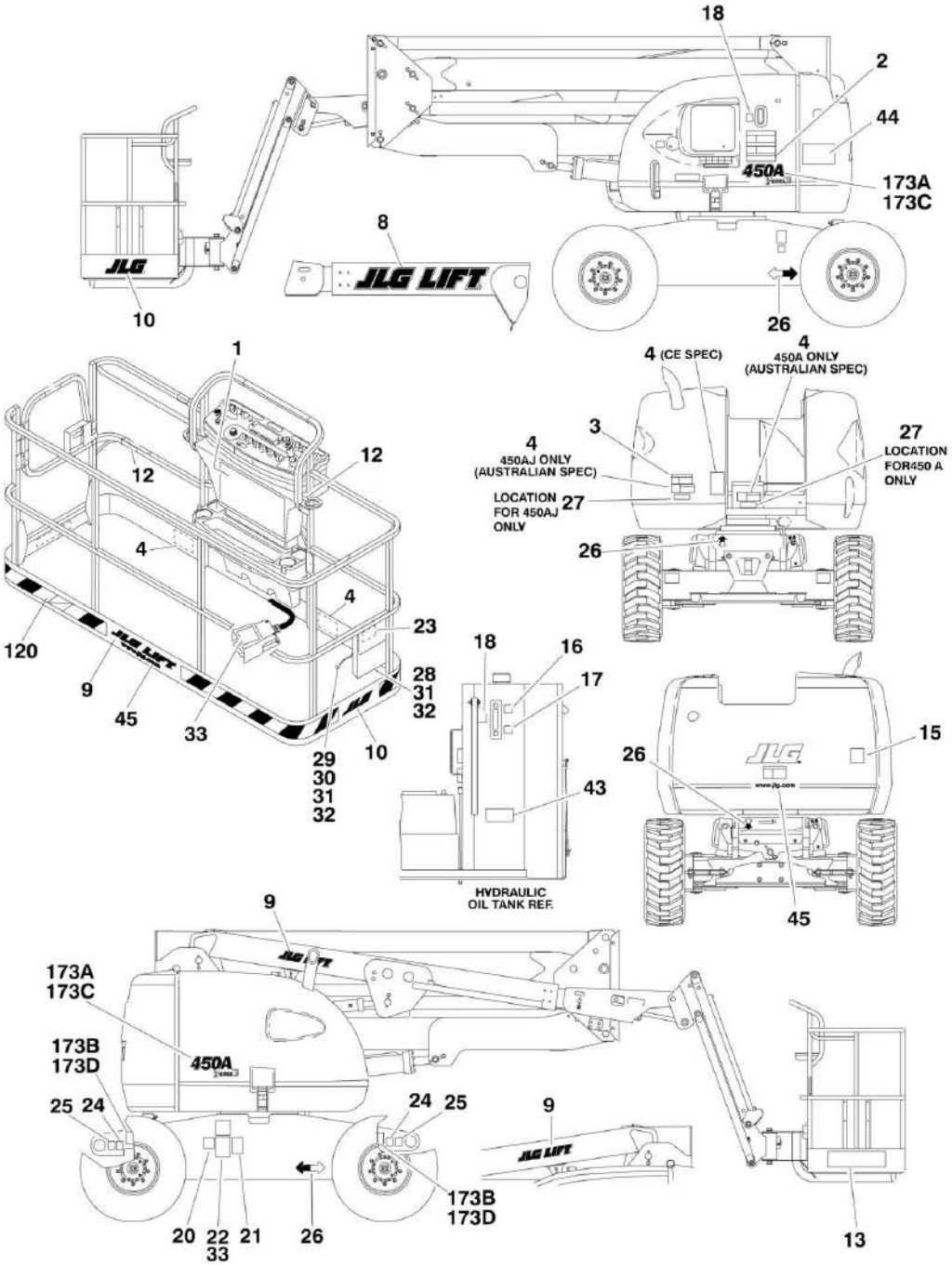

FIGURE 8-6. DECALS INSTALLATION - AUSTRALIAN AND CE SPECS (USA BUILT MACHINES AND BELGIUM BUILT MACHINES) (SN 0300069155 through 0300074818, SN 1300000001 through 1300000180)

ITEM	PART NUMBER	QTY	DESCRIPTION	REV
		Ref	**DECAL INSTALLATIONS**	
	0272574	Ref	**450A/AJ Series II Australian Spec**	4
	0272500	Ref	**Dutch Spec**	5
	0272502	Ref	**French Spec**	5
	0272499	Ref	**German Spec**	5
	0272501	Ref	**Italian Spec**	5
	0273184	Ref	**Norwegian Spec**	3
	0272503	Ref	**Spanish Spec**	5
	0272498	Ref	**UK Spec**	5
	0272530	Ref	**JLG Logo Decals**	1
1		Ref	Decal - Danger/Warning Options:	
1	1703992	1	Australian Spec	
1	1704809	1	Dutch Spec	
1	1704811	1	French Spec	
1	1704767	1	German Spec	
1	1704810	1	Italian Spec	
1	1705270	1	Norwegian Spec	
1	1704812	1	Spanish Spec	
1	1704808	1	UK Spec	
2		Ref	Decal - Danger/Warning Options:	
2	1705332	1	Australian Spec	
2	1705410	1	Dutch Spec	
2	1705412	1	French Spec	
2	1705409	1	German Spec	
2	1705411	1	Italian Spec	
2	1705272	1	Norwegian Spec	
2	1705413	1	Spanish Spec	
2	1705408	1	UK Spec	
4	1701518	3	Decal - Warning/Crushing	
9	1702774	3	Decal - Lift (3 1/2in)	
10	1702773	2	Decal - JLG (5 in)	
12	1704277	3	Decal - Attach Lanyard	
15	1705084	1	Decal - Sound Power Level (Not Required - Australian Spec)	
16	1701502	1	Decal - High Oil Level	
17	1701503	1	Decal - Low Oil Level	
18	1701504	2	Decal - Hydraulic Oil	
20	See Note	1	Decal - Bar Code (Note: Not available for purchase)	
21	1700584	1	Decal - Patent	
22	See Note	1	Nameplate - Serial Number (Note: Not available for purchase)	
23	1701509	1	Decal - Manual	
24	1702300	4	Decal - Tie Down /Lift	
25	1701500	4	Decal - Tie Down /Lift	
26	1701529	4	Decal - Arrow	
27		Ref	Decal Options:	
27	3251242	1	Decal (240V-50Hz - Australian Spec)	
27	Not Required	0	All Other Specs	
28	0860520	1	Box, Manual Storage	
29	1060279	1	Cable, Lanyard	

SECTION 8 - DECALS

ITEM	PART NUMBER	QTY	DESCRIPTION	REV
30	0641408	1	Bolt 1/4in-20NC x 1in	
31	4751400	6	Flatwasher 1/4in Regular	
32	3311405	5	Locknut 1/4in-20NC	
33		Ref	Fastener Options:	
33	2080057	2	Amtak	
33	3820001	4	Rivet (Norwegian Spec Only)	
34		Ref	Decal - Footswitch Options:	
34	Not Required	0	Australian Spec	
34	1703518	1	Dutch Spec	
34	1693292	1	French Spec	
34	1693294	1	German Spec	
34	1701600	1	Italian Spec	
34	1705275	1	Norwegian Spec	
34	1701791	1	Spanish Spec	
34	Not Required	0	UK Spec	
36	1701505	1	Decal - Fuel	
43	1704412	1	Decal - Hydraulic Fluid	
44	3252768	1	Decal - Lift Diagram	
45	1704885	2	Decal - Website	
46	0641406	4	Bolt, 1/4in-20NC x 3/4in (Not Shown)	
47	1705821	1	Decal, Tipping/Elect (PLF) (Not Shown)	
48	1705822	1	Decal, Elect/Safety Manual (MTB) (Not Shown)	
	0010578	Ref	**DECAL OPTIONS**	
120	0272165	Ref	**Warning Stripe Decal Installation**	
120	4420051	21.7 ft /6.61m	Decal - Warning Stripes	
173		Ref	**Model Designation Decal Installation Options**	
173	0272580	Ref	**450A Series II**	2
173B	1703486	4	Decal - Max Tire Load	
173	0272581	Ref	**450AJ Series II**	2
173D	1703486	4	Decal - Max Tire Load	

SECTION 8 - DECALS

FIGURE 8-7. DECALS INSTALLATION - AUSTRALIAN AND CE SPECS (USA BUILT MACHINES AND BELGIUM BUILT MACHINES) (SN 0300074819 through 0300123999, SN 1300000180 through 1300006000)

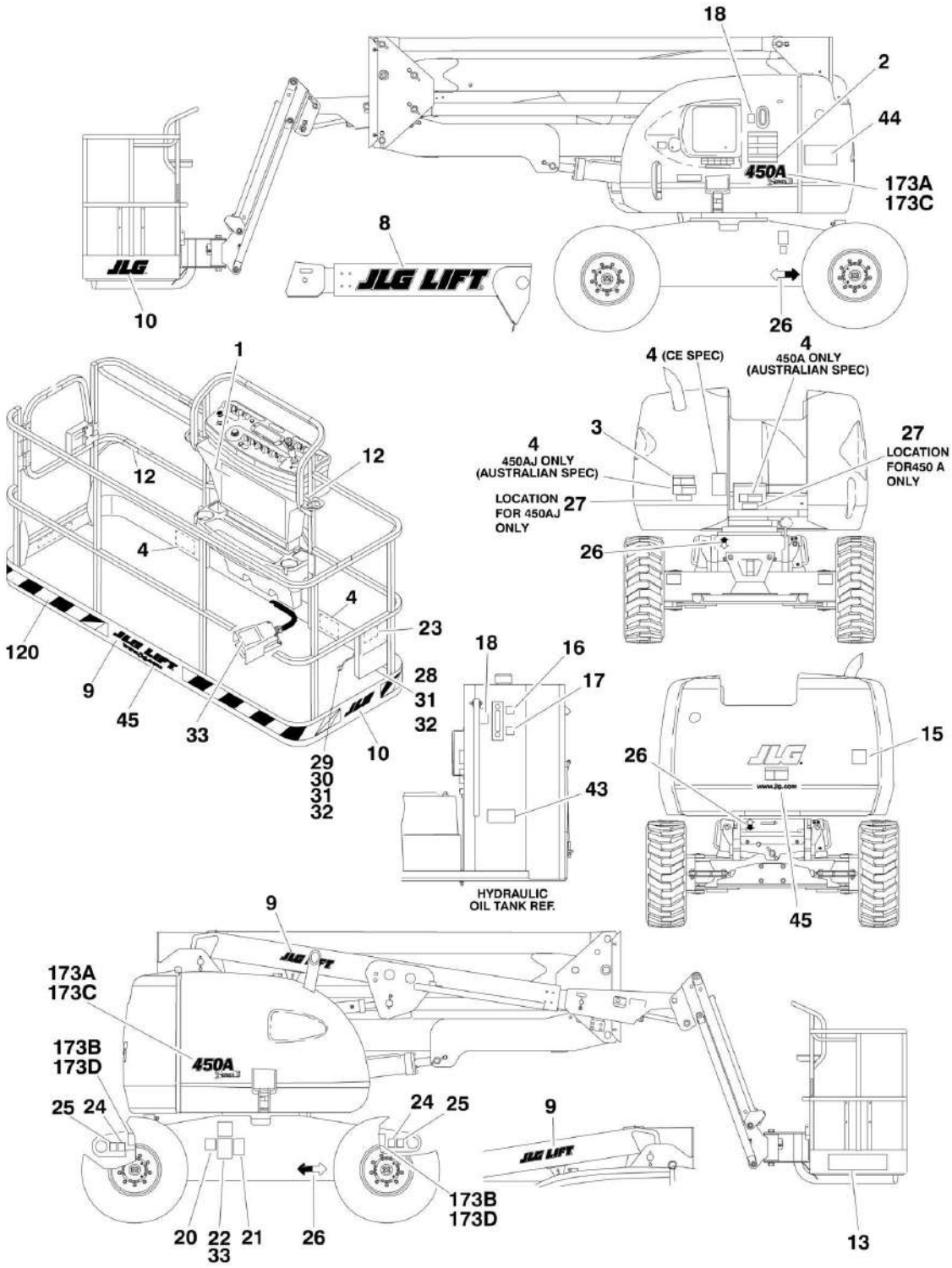

FIGURE 8-7. DECALS INSTALLATION - AUSTRALIAN AND CE SPECS (USA BUILT MACHINES AND BELGIUM BUILT MACHINES) (SN 0300074819 through 0300123999, SN 1300000180 through 1300006000)

ITEM	PART NUMBER	QTY	DESCRIPTION	REV
		Ref	**DECAL INSTALLATIONS**	
	0272574	Ref	**Australian Spec**	4
	0273452	Ref	**CE Spec**	3
	0272530	Ref	**JLG Logo Decals**	1
1		Ref	Decal - Danger/Warning Options:	
1	1703992	1	Australian Spec	
1	1705821	1	CE Spec	
2		Ref	Decal - Danger/Warning Options:	
2	1705332	1	Australian Spec	
2	1705822	1	CE Spec	
4	1701518	3	Decal - Warning/Crushing	
9	1702774	3	Decal - Lift (3 1/2in)	
10	1702773	2	Decal - JLG (5 in)	
12	1704277	3	Decal - Attach Lanyard	
15	1705084	1	Decal - Sound Power Level (Not Required - Australian Spec)	
16	1701502	1	Decal - High Oil Level	
17	1701503	1	Decal - Low Oil Level	
18	1701504	2	Decal - Hydraulic Oil	
20	See Note	1	Decal - Bar Code (Note: Not available for purchase)	
21	1700584	1	Decal - Patent	
22	See Note	1	Nameplate - Serial Number (Note: Not available for purchase)	
23	1701509	1	Decal - Manual	
24	1702300	4	Decal - Tie Down /Lift	
25	1701500	4	Decal - Tie Down /Lift	
26	1701529	4	Decal - Arrow	
27		Ref	Decal Options:	
27	3251242	1	Decal (240V-50Hz - Australian Spec)	
27	Not Required	0	CE Spec	
28	0860520	1	Box, Manual Storage	
29	1060279	1	Cable, Lanyard	
30	0641408	1	Bolt 1/4in-20NC x 1in	
31	4751400	6	Flatwasher 1/4in Regular	
32	3311405	5	Locknut 1/4in-20NC	
33	2080057	2	Fastener	
34		Ref	Decal - Footswitch Options:	
34	Not Required	0	Australian Spec	
34	1705828	1	CE Spec	
36	1701505	1	Decal - Fuel	
43	1704412	1	Decal - Hydraulic Fluid	
44	3252768	1	Decal - Lift Diagram	
45	1704885	2	Decal - Website	
46	0641406	4	Bolt, 1/4in-20NC x 3/4in (Not Shown)	
47	1705821	1	Decal, Tipping/Elect (PLF) (Not Shown)	
48	1705822	1	Decal, Elect/Safety Manual (MTB) (Not Shown)	
	0010578	Ref	**DECAL OPTIONS**	
120	0272165	Ref	**Warning Stripe Decal Installation**	
120	4420051	21.7 ft /6.61m	Decal - Warning Stripes	

SECTION 8 - DECALS

ITEM	PART NUMBER	QTY	DESCRIPTION	REV
173		Ref	**Model Designation Decal Installation Options**	
173	0272580	Ref	**450A Series II**	2
173B	1703486	4	Decal - Max Tire Load	
173	0272581	Ref	**Decal (450AJ Series II)**	2
173D	1703486	4	Decal - Max Tire Load	

SECTION 9 - RECOMMENDED SERVICE PARTS STOCK

SECTION 9 - RECOMMENDED SERVICE PARTS STOCK

FIGURE 9-1. MODEL 450A / 450AJ SERIES II STANDARD PARTS

ITEM	PART NUMBER	QTY	DESCRIPTION	REV
	Note	Ref	**Note: The following list will service fleets of machines (built to current production per date on the front cover) with emergency repair parts which can be installed in the field. Parts from the list should be replaced when inventory is depleted to keep service parts stock supplied. For further information, contact your JLG dealer or the JLG Industries Parts Department.**	
		Ref	**STANDARD PARTS**	
	2120210	1	Element, Filter	
	7012944	1	Coil	
	7012943	1	Coil	
	7017451	1	Coil	
	7012664	1	Element, Air Cleaner	
	3740067	1	Relay	
	7024444	1	Breather, Hydraulic Tank	
	7023205	1	Element, Return Filter	
	3740049	1	Relay	
	4360328	1	Switch, Toggle	
	2860030	1	Key, Replacement	
	4360475	1	Switch, Mushroom	
	4360476	1	Contact, Switch Block	
	2940074	1	Latch	
	4360387	1	Switch, Push Button	
	4360407	1	Control, Speed	
	4360331	1	Switch, Toggle	
	1001129555	1	Controller (Lift and Swing)	
	1001212415	1	Controller (Drive and Steer)	
	3990010	2	Diode 6 Amp	
	2400065	2	Fuse	

FIGURE 9-2. MODEL 450A / 450AJ SERIES II VARIABLE PARTS

ITEM	PART NUMBER	QTY	DESCRIPTION	REV
	Note	Ref	**Note: The following list will service fleets of machines (built to current production per date on the front cover) with emergency repair parts which can be installed in the field. Parts from the list should be replaced when inventory is depleted to keep service parts stock supplied. For further information, contact your JLG dealer or the JLG Industries Parts Department.**	
		Ref	**VARIABLE PARTS**	
	70001403	1	Filter, Oil Element, (Caterpillar Engine Machines)	
	7026871	1	Filter, Fuel (Caterpillar Engine Machines)	
	70001990	1	Solenoid, Shutdown (Caterpillar Engine Machines)	
	7016331	1	Filter, Oil Element, (Deutz Engine Machines)	
	7020023	1	Filter, Fuel (Deutz Engine Machines)	
	7027795	1	Module, Control (Deutz Engine Machines)	
	7027965	1	Filter, Oil (GM Engine Machines)	
	7027972	1	Filter, Fuel (GM Engine Machines)	
	7027994	1	Module, ECU Engine Control (GM Engine Machines)	
	70001403	1	Filter Oil Element, (Perkins Engine Machines)	
	70001409	1	Filter, Fuel (Perkins Engine Machines)	
	3740080	1	Relay (Machines with Generator Option)	
	4360336	1	Switch, Toggle (Machines with Generator Option)	
	4360336	1	Switch, Toggle (GM Engine Machines)	
	2915239	1	Module, Ground Control (Caterpillar/Perkins Engines)	
	1600411	1	Module, Ground Control (GM Engines)	
	4360469	1	Switch, Key (ANSI and ANSI Export Specs)	
	4360470	1	Switch, Key (CE and Australian Specs)	
	4360548	1	Switch, Limit	
	4360057	1	Switch, Limit (Soft-Touch Option)	
	1600376	1	Module, Platform Control	
	3990001	2	Diode (Caterpillar/Perkins Engine Machines)	
	2400093	1	Breaker, Circuit (CE Machines with AC Platform Receptacle)	
	4360232	1	Breaker, Circuit (Floodlights Option)	
	2400070	2	Fuse (Platform Worklights Option)	

SECTION 10 - SPECIAL OPTIONS

SECTION 10 - SPECIAL OPTIONS

FIGURE 10-1. SPECIAL OPTIONS

ITEM	PART NUMBER	QTY	DESCRIPTION	REV
		Ref	**MISCELLANEOUS SPECIAL OPTIONS**	
	Note	Ref	**Note: This list is to accommodate machines ordered with special equipment. Options may not be applicable to all models. For more specific parts information contact JLG Parts Department.**	
	1340061	Ref	**Air Cleaner with Dust Evacuator Valve**	
		Ref	**Air Line at Platform Installations**	
	0271527	Ref	**450A & 450AJ with 60Hz SkyPower (ANSI, ANSI Export and CSA Specs)**	
	0275910	Ref	**450A & 450AJ with 50Hz SkyPower (ANSI Export, Australian and CE Specs)**	
	0275438	Ref	**Special Boom with Airline to Platform plus SkyPower (CE Spec)**	
	0275437	Ref	**Main Boom Cables and Airlines Components**	
	0275438	Ref	**Tower Boom Cables and Airlines Components**	
		Ref	**Axle Stop Block Installations (Australian and CE Specs)**	
	01001093802	Ref	**2WD**	
	01001093752	Ref	**4WD - USA Machines Built (SN 0300107512 through 0300123999)**	
	01001093752	Ref	**4WD - Belgium Built Machines (SN 1300003222 through 1300006000)**	
	0270723	Ref	**Beacon Installation Mounted Under Platform**	
		Ref	**Bellows Installations**	
	0271399	Ref	**450A with Oscillating Axle (Belgium Built Machines) (Prior to SN 1300003222)**	
	0275855	Ref	**450A with Oscillating Axle (Belgium Built Machines) (SN 1300003222 through 1300006000)**	
	0273764	Ref	**450AJ with Oscillating Axle (Belgium Built Machines) (Prior to SN 1300003222)**	
	0275857	Ref	**450AJ with Oscillating Axle (Belgium Built Machines) (SN 1300003222 through 1300006000)**	
	0271315	Ref	**Boom Wiper Installation**	
	0256789	Ref	**Camera Mount Assembly**	
		Ref	**ClearSky (Telematics) Installations**	
	1001107008	Ref	**ANSI Spec**	
	1001107009	Ref	**ANSI Export/CE/Japanese Specs**	
	1001139127	Ref	**Australian Spec**	
	1001107010	Ref	**CSA Spec**	
		Ref	**Note: Refer to ClearSky (Telematics) Manual p/n 3128499 for Serviceable Parts.**	
		Ref	**Clear Sky (Telematic) Kit (Includes Installation, Decals, User Guide and Manual 3128499)**	
	1001117254	Ref	**ANSI Spec**	
	1001121610	Ref	**ANSI Export and Japanese Specs**	
	1001139127	Ref	**Australian Specs**	
	1001117261	Ref	**CSA Spec**	
		Ref	**Cold Weather Start Kits**	
	0273064	Ref	**Caterpillar/Perkins Engine Machines**	
	0258921	Ref	**Deutz Engine Machines (Ether)**	
	0271912	Ref	**Deutz Engine Machines (Glow Plugs)**	
	0258923	Ref	**Ford Engine Machines**	

ITEM	PART NUMBER	QTY	DESCRIPTION	REV
	0275054	Ref	**GM Engine Machines**	
		Ref	**DECAL INSTALLATIONS**	
	0257195	Ref	Decal - Government Warranty Installation (ANSI Specs)	
	1704150	Ref	Decal - Glow Plug Warning	
	0274530	Ref	Decal - Head and Enquist Equipment	
	0272942	Ref	Decal - Hertz	
	1703175	Ref	Decal - Lanyard Attach (GM K-1 Spec)	
	0270464	Ref	Decal - Nations Rent	
	0274245	Ref	Decal - National Equipment Services	
	1702962	Ref	Decal - Prop 65 Warning (Diesel Machines) (California Spec)	
	1702961	Ref	Decal - Prop 65 Warning (Gasoline Machines) (California Spec)	
	1001095408	Ref	Decal - RSC Equipment Rental	
		Ref	Decal - Sunbelt Options:	
	0271111	Ref	USA Built Machines **(SN 0300065080 through 0300070958)**	
	0271111	Ref	Belgium Built Machines **(Prior to SN 1300000005)**	
	1283029	Ref	USA Built Machines **(SN 0300065080 through 0300070958)**	
	1283029	Ref	Belgium Built Machines **(Prior to SN 1300000005)**	
	0271628	Ref	USA Built Machines **(SN 0300070959 through 0300123999)**	
	0271628	Ref	Belgium Built Machines **(SN 1300000005 through 1300006000)**	
	1283346	Ref	USA Built Machines **(SN 0300070959 through 0300123999)**	
	1283346	Ref	Belgium Built Machines **(SN 1300000005 through 1300006000)**	
	0271627	Ref	Decal - United Rentals	
		Ref	Decal Installation - Warning Stripes	
	0257733	Ref	Decal **(SN 0300065080 through 0300065907)**	
	0272165	Ref	Decal **(SN 0300065908 through 0300123999)**	
		Ref	**Electrical Connector Kits**	
	1001148902	Ref	Amp/Tyco Electrical Connector Kit	
	1001148903	Ref	Deutsch DT Electrical Connector Kit	
	1001148904	Ref	Deutsch HD Electrical Connector Kit	
	1001148905	Ref	Packard Electrical Connector Kit	
	1001148906	Ref	Various Electrical Connectors Kit	
		Ref	**Engine Block Heater Installation**	
	0258922	Ref	**Ford Engines**	
	0275055	Ref	**GM Engines**	
		Ref	**Engine Replacement Kits**	
	1001145838	Ref	Engine Kit - Replace Perkins Tier II with Deutz D2011L03 Tier II	
	1001139760	Ref	Engine Kit - Replace Perkins Tier II with Perkins Tier IVi	
	0258919	Ref	**Ether Start Installation (Deutz Engine Machines)**	
	1001130758	Ref	**Engine Fan Kit (Perkins Engine Machines) (Kit converts Electric Cooling Fan to Engine Driven Cooling Fan)**	
		Ref	**Filter Kits**	
		Ref	**Boom Hydraulic Air Filter Kit Options:**	
		Ref	**Caterpillar Engines**	
	1001114121	Ref	Caterpillar Engines (Use p/n 1001109698) **(SN 0300065080 through 0300123999)**	
		Ref	**Deutz Engines**	
	1001114061	Ref	Duetz Engines (Use p/n 1001109698) **(SN 0300065080 through 0300123999)**	
	1001114121	Ref	Duetz Engines (Use p/n 1001109698) **(SN 0300065080 through 0300123999)**	
		Ref	**Ford LRG-425 Engines**	

ITEM	PART NUMBER	QTY	DESCRIPTION	REV
	2910947	Ref	Ford LRG-425 Engines (Use p/n 2910455) **(SN 0300065080 through 0300087630)**	
		Ref	**GM Engines**	
	1001114059	Ref	GM Engines (Use p/n 1001114131) **(SN 0300087631 through 0300123999)**	
		Ref	**Perkins Engines**	
	1001114060	Ref	Perkins Engines (Use p/n 1001109694) **(SN 0300065080 through 0300087630)**	
	1001114120	Ref	Perkins Engines (Use p/n 1001109694) **(SN 0300065080 through 0300087630)**	
	1001114061	Ref	Perkins Engines (Use p/n 1001109698) **(SN 0300087631 through 0300123999)**	
	1001114121	Ref	Perkins Engines (Use p/n 1001109698) **(SN 0300087631 through 0300123999)**	
		Ref	**Combined Filter Kit Options:**	
		Ref	**Caterpillar Engines**	
	1001114035	Ref	USA Built Machines (Use p/n 1001110998) **(SN 0300065080 through 0300087630)**	
	1001114034	Ref	USA Built Machines with Electric Cooling Fan w/o UGM (Use p/n 1001111000) **(SN 0300087631 through 0300123999)**	
	1001151644	Ref	USA Built Machines with Mechanical Cooling Fan w/o UGM **(SN 0300087631 through 0300123999)**	
	2910495	Ref	USA Built Machines (Use p/n 1001110997) **(SN 0300065080 through 0300087630)**	
	1001114129	Ref	USA Built Machines (Use p/n 1001110997) **(SN 0300065080 through 0300087630)**	
	2910495	Ref	Belgium Built Machines (Use p/n 1001110997) **(Prior to SN 1300001242)**	
	1001114129	Ref	Belgium Built Machines (Use p/n 1001110997) **(Prior to SN 1300001242)**	
	1001114128	Ref	USA Built Machines (Use p/n 1001110999) **(SN 0300087631 through 0300160835)**	
	1001114128	Ref	Belgium Built Machines (Use p/n 1001110999) **(SN 1300001242 through 1300006000)**	
		Ref	**Ford LRG-425 Engines**	
	2910496	Ref	Ford LRG-425 Engines (Use p/n 2910949) **(SN 0300065080 through 0300087630)**	
	1001114126	Ref	Ford LRG-425 Engines (Use p/n 2910949) **(SN 0300065080 through 0300087630)**	
	1001114119	Ref	Ford LRG-425 Engines (Use p/n 1001114125) **(SN 0300087631 through 0300123999)**	
	1001114137	Ref	Ford LRG-425 Engines (Use p/n 1001114125) **(SN 0300087631 through 0300123999)**	
	1001114059	Ref	**GM Engines (Use p/n 1001114131)**	
		Ref	**Perkins Engines**	
	1001114063	Ref	Machines with Electric Cooling Fan w/o UGM (Use p/n 1001111001) **(SN 0300087631 through 0300123999)**	
	1001151645	Ref	Machines with Mechanical Cooling Fan w/o UGM	
		Ref	**Engine Fuel/Oil Filter Kit Options:**	
	1001110138	Ref	Deutz Engines	
	1001110143	Ref	Perkins Engines	
	1001139099	Ref	**Fire Extinguisher Installation**	
		Ref	**Fluids**	
	2300014	Ref	Brake Fluid (4WD Drive Brake)	
	2300040	Ref	Conditioner , Diesel Fuel	
		Ref	Coolant, Antifreeze (Caterpillar, GM and Perkins Engines)	

ITEM	PART NUMBER	QTY	DESCRIPTION	REV
	2300004	Ref	Machines without Arctic Package	
	2300041	Ref	Machines with Arctic Package	
	2300016	Ref	Hydraulic Fluid (Drive Hubs/System)	
	3020021	Ref	Engine Coupling Grease	
		Ref	Engine Oil	
	3020016	Ref	Motor Oil Mobil Delvac MX 15W-40 (Machines Without Arctic Package)	
	3020044	Ref	Motor Oil Mobil 0W-40 (Machines With Arctic Package)	
	2300014	Ref	Mobil 424	
	2300027	Ref	Mobil 224H Bio	
	2300029	Ref	Mobil EAL ISO 46 Bio	
	2300016	Ref	Mobil DTE 13M	
	2300019	Ref	Quaker State Quintolubric 888-46 Fire Resistant	
	2300039	Ref	Exxon Univis Hvl 26 (Machines with Arctic Package)	
		Ref	**Footswitch Shield Installation**	
	4060959	Ref	USA Built Machines **(SN 0300065080 through 0300081557)**	
	4060959	Ref	Belgium Built Machines **(Prior to SN 1300000603)**	
	3380652	Ref	USA Built Machines **(SN 0300081558 through 0300123999)**	
	3380652	Ref	Belgium Built Machines **(SN 1300000603 through 1300006000)**	
		Ref	**Generator Add-on Kit Optionss:**	
	1001227348	Ref	7500W Generator Add-on Kit (Deutz Engines) **(SN 0300075503 through 0300124000)**	
	1001227349	Ref	7500W Generator Add-on Kit (GM Engines)	
	0271548	Ref	**Glow Plug Installation (Deutz Engine Machines)**	
	1001094475	Ref	**Hourmeter for Generator Installation**	
	1001148971	Ref	**Lanyard (Bolt-On) Kit Installation**	
		Ref	**Oil Cooler Installation (Deutz and GM Engines)**	
	0275004	Ref	Oil Cooler Installation **(SN 0300065080 through 0300113121)**	
	1001096182	Ref	Oil Cooler Installation **(SN 0300113122 through 0300123999)**	
	0271528	Ref	**Oxy/Acetylene Lines to Platform Installation**	
	0258703	Ref	**Platform Console Cover Installation**	
	1001205175	Ref	**Platform Console Cover Kit**	
		Ref	**Platform Entry Kit**	
	1001142504	Ref	**Replace Swing Gate with Drop Bar Kit**	
	1001142505	Ref	**Replace Drop Bar with Swing Gate Kit**	
		Ref	**Platform Mesh Installations (Side Entry Platforms) (ANSI Specs)**	
	0273148	Ref	**30in X 6ft (76cm x 1.83m) (Mesh to Top Rail)**	
	1001140315	Ref	**30in X 5ft (76cm x 1.52m) (Mesh to Mid Rail)**	
	0273146	Ref	**30in X 5ft (76cm x 1.22m) (Mesh to Top Rail)**	
	1001140318	Ref	**30in X 4ft (76cm x 1.52m) (Mesh to Mid Rail)**	
	0273147	Ref	**30in X 4ft (76cm x 1.22m) (Mesh to Top Rail)**	
	0274095	Ref	**Platform Top Rail Extension**	
	1001149560	Ref	**SkyGuard Complete Installation Kit (ADE/Non-UGM Equipped Machines)**	
	1001143256	Ref	**SkyGuard Optional Blue Beacon Light Installation Kit**	
	1001228964	Ref	**Telematic Retrofit Harness Kit (Machines with UGM)**	
		Ref	**Tools for Service**	
	2901443	Ref	Analyzer Kit	
	8896941	Ref	Wire Stripper	
	7002821	Ref	Wire Crimper (To install wire ends to wires)	
	7002823	Ref	Pin/Socket Extractor - Universal (To Remove Pins/Sockets from	

ITEM	PART NUMBER	QTY	DESCRIPTION	REV
			Connectors)	
	4460467	Ref	Extractor - 16-18 Gauge (For Removal of Pin/Sockets from Deutsch Connectors)	
	4460510	Ref	Extractor - 12-14 Gauge (For Removal of Pin/Sockets from Deutsch Connectors)	
	7002822	Ref	Screwdriver, Potentiometer (To Adjust Drive Controllers)	
	7016654	Ref	Screwdriver, Magnetic	
	7004275	Ref	Seal Installation Tool - 1in	
	7004276	Ref	Seal Installation Tool - 1 1/2in	
	7002826	Ref	Seal Installation Tool - 2in	
	7016655	Ref	Wire Rope Sheave Gauge	
	7002840	Ref	Anti-Rotation Pin Removal Tool (Use to Disassemble Lockout Valve)	
	1001137005	Ref	Kit, Software Cable	
	0274884	Ref	**Transformer (Cold Weather Package) Installation (ANSI Export Spec Only)**	
	0257728	Ref	**Tube Rack Installation**	
		Ref	**Turntable Bearing Kit Options:**	
	1001219625	Ref	**Turntable Bearing Kit (replaces 2915081) (SN 0300065080 through 0300069336)**	
	1001231278	Ref	**Turntable Bearing Kit (replaces 2915082 & 1001160532) (SN 0300069337 through 0300123999, SN 1300000001 through 1300006000)**	
	0271529	Ref	**Weld Leads at Platform Installation**	

PART NUMBER INDEX

PART NUMBER INDEX

0010578....514, 524, 532, 535
0020005.....79
0060050.....305, 309, 317
0060062.....301, 317
0060096.....305, 317
0080163....123, 131, 173, 179
0080181.....110, 162, 184
0080201....110, 137, 145, 158, 162, 184
0080214.....137, 145
0080231....121, 128, 170, 177
0100009.....345
0100010.....333
0100011....13, 14, 17, 18, 21, 22, 24, 29, 30, 35, 75, 79, 83, 110, 112, 114, 121, 126, 128, 136, 137, 144, 145, 151, 156, 157, 158, 162, 164, 165, 169, 170, 176, 177, 184, 186, 207, 213, 219, 220, 223, 227, 233, 238, 241, 245, 249, 253, 257, 263, 269, 273, 279, 285, 291, 292, 293, 297, 299, 301, 305, 309, 313, 314, 321, 322, 325, 329, 337, 343, 346, 369, 371, 375, 385, 389, 393, 397, 401, 403, 405, 409, 413, 417
0100019....13, 17, 22, 29, 30, 87, 241, 253, 257, 263, 269, 273, 279, 285
0100020....110, 112, 121, 126, 128, 137, 144, 147, 156, 158, 162, 164, 169, 170, 176, 177, 186, 207, 208, 377
0100035.....401, 405
0100038..13, 17, 22, 385, 389, 393, 397, 401, 403, 405, 409, 413
0100040.....333
0100048....139, 144, 156, 216, 219, 220, 329, 345, 486, 489
0100062.....257, 263
0100063.....389, 397, 403
0100079....113, 165, 187, 207
0100081....314, 345, 365, 367
01001093752.....542
01001093802.....542
0140001.....83
0140011.....345
0140032.....220
0181727....110, 121, 126, 136, 144, 156, 162, 169
0181949.....151
0200048..... 343
0200632..... 238
0200741..... 233
0200742.... 227, 233, 249
0240049..... 80
0240050..... 80
0240152..... 80
0255917..... 504
0256632..... 347
0256789..... 542
0256847... 123, 131, 173, 179
0257195..... 543
0257728..... 546
0257733..... 543
0257740..... 32
0257746..... 32
0257755..... 32
0257756..... 32
0257887.... 220, 482, 504
0258009..... 32
0258010..... 32
0258011..... 32
0258012..... 32
0258028..... 31
0258029..... 31
0258030..... 31
0258031..... 32
0258033..... 151
0258252..... 140
0258253..... 140
0258303..... 497
0258304..... 497
0258305..... 497
0258400..... 88
0258430..... 225
0258703..... 545
0258830..... 32
0258831..... 32
0258919..... 543
0258921..... 482, 542
0258922..... 543
0258923..... 542
0259128..... 32
0259129..... 32
0259845..... 75
0259853..... 75
0270015..... 321
0270029..... 79
0270086..... 79, 80
0270115..... 75
0270116..... 75
0270119..... 75
0270180..... 80
0270186..... 80
0270464..... 543
0270532..... 321
0270671..... 31
0270672..... 32
0270673..... 32
0270674..... 31
0270675..... 32
0270676..... 32
0270723..... 542
0270814... 334, 338, 347, 483
0270839..... 291, 305
0270870..... 29, 71
0270871..... 30, 72
0270943..... 136
0270944..... 135
0270945..... 136
0270946..... 135
0270968..... 21
0270969..... 21
0270970..... 13
0270971..... 13
0271011..... 24
0271012..... 14
0271019..... 136, 347
0271020..... 135
0271021..... 136, 347
0271022..... 135
0271027..... 120
0271029..... 120
0271072..... 219, 347
0271073..... 219
0271074..... 207
0271111..... 543
0271122.... 292, 306, 486
0271124..... 83, 321, 325
0271168..... 509
0271169..... 509
0271170..... 527
0271171..... 527
0271172..... 527
0271173..... 527
0271174..... 527
0271175..... 527
0271176..... 527
0271177..... 527
0271178..... 527
0271179..... 527
0271180..... 527
0271181..... 527
0271182..... 527
0271183..... 527
0271184..... 517
0271185..... 517
0271186..... 517
0271187..... 517
0271188..... 517
0271189..... 517, 521
0271190..... 517
0271191..... 517
0271192..... 517
0271193..... 517
0271194..... 517
0271195..... 517
0271197..... 83, 321, 325
0271199..... 293
0271206.... 292, 306, 487
0271209..... 223
0271210..... 223
0271216..... 291, 301
0271217..... 220
0271224..... 237
0271226..... 237
0271241.... 509, 517, 527
0271310.... 292, 301, 486
0271311.... 292, 301, 486
0271313..... 322
0271315.....542
0271340.....347
0271379.....79
0271380.....79
0271384.....79
0271385.....79
0271391.....151
0271399.....542
0271506.....87
0271527.....542
0271528.....545
0271529.....546
0271548.....545
0271593.....231
0271594.....231
0271627.....543
0271628.....543
0271653.....18
0271656.....17
0271912.....542
0271931.....333, 337
0272057.....219
0272070.....325
0272110.....347
0272162.....231
0272165....514, 524, 532, 535, 543
0272167.....87
0272254.....371
0272299.....31
0272300.....32
0272320.....30, 72
0272340.....297
0272341.....510, 514
0272356.....32
0272357.....32
0272360.....32
0272361.....32
0272448.....371
0272489.....170
0272490.....169
0272491.....207
0272497.....293, 299
0272498.....531
0272499.....531
0272500.....531
0272501.....531
0272502.....531
0272503.....531
0272521.....369
0272529.....219
0272530....513, 521, 531, 535
0272573.....513
0272574.....531, 535
0272575.....521
0272576.....521
0272577.....521
0272578.....521
0272579.....521
0272580....514, 524, 532, 536
0272581....514, 524, 532, 536
0272588.....369

0272589 ... 259, 265, 281, 287
0272590 375
0272594 ..... 298, 488
0272599 ..... 375, 377
0272606 375
0272607 ..... 375, 377
0272614 231
0272615 231
0272616 231
0272639 21
0272652 24
0272660 35
0272664 ..... 297, 309
0272665 ..... 310, 489
0272669 207
0272703 329
0272891 135
0272892 136
0272893 135
0272894 136
0272895 ..... 30, 72
0272907 ..... 29, 71
0272921 339
0272922 110
0272942 543
0272970 ..... 338, 486
0272987 112
0272988 112
0272996 114
0272997 114
0273050 227
0273051 227
0273064 542
0273077 18
0273146 545
0273147 545
0273148 545
0273160 ..... 257, 502
0273184 531
0273279 .... 292, 301, 486
0273280 .... 292, 306, 487
0273358 87
0273380 ... 255, 259, 265, 271, 275, 281
0273420 .... 257, 263, 502
0273452 535
0273487 13
0273488 21
0273489 17
0273495 ..... 338, 347
0273498 21
0273500 35
0273507 241
0273511 241
0273754 169
0273764 542
0273796 126
0273797 126
0274013 144
0274014 144
0274020 223
0274079 231
0274084 227
0274085 231
0274088 227
0274089 231
0274095 545
0274240 ..... 343, 347
0274245 543
0274288 ..... 269, 502
0274332 126
0274333 126
0274335 176
0274530 543
0274610 144
0274611 144
0274612 112
0274613 112
0274615 83
0274616 83
0274685 13
0274688 35
0274690 13
0274702 21
0274703 21
0274705 17
0274706 18
0274711 ..... 253, 502
0274742 21
0274884 546
0274927 ..... 343, 347
0275004 545
0275015 156
0275033 223
0275035 ..... 273, 502
0275039 245
0275054 543
0275055 543
0275106 126
0275116 .... 292, 306, 487
0275125 ..... 291, 305
0275126 293
0275216 500
0275217 500
0275218 500
0275219 500
0275436 ..... 298, 488
0275437 .... 310, 489, 542
0275438 .... 297, 309, 542
0275452 500
0275453 500
0275454 500
0275470 ..... 29, 71
0275479 112
0275661 263
0275678 497
0275679 497
0275680 498
0275681 497
0275682 498
0275683 498
0275684 498
0275786 .... 292, 306, 487
0275815 186
0275853 ..... 29, 71
0275854 ..... 30, 72
0275855 542
0275857 542
0275866 223
0275868 223
0275869 126
0275870 156
0275871 176
0275872 112
0275873 126
0275874 112
0275910 542
0280199 ..... 21, 23
0280200 ..... 13, 14
0280201 ..... 17, 18
0280202 23
0340041 .... 110, 121, 129, 137, 145, 158, 162, 170, 177, 184
0340046 .... 110, 140, 146, 162, 184
0362519 151
0362763 ..... 13, 18, 21
0362764 ..... 13, 18, 21
0362910 75
0363012 ..... 71, 72
0363082 241
0363097 ..... 241, 269
0363201 269
0363202 269
0370024 415
0370026 ..... 387, 421
0400075 .... 110, 121, 126, 136, 144, 156, 162, 169
0440161 24
0440162 ..... 14, 18
0440203 ..... 87, 97
0440255 ..... 87, 97
0440271 24
0440272 ..... 87, 97
0440274 25
0440291 25
0440339 101
0480050 238
0480111 238
0480118 233
0480120 ..... 227, 233, 249
0480121 ..... 227, 249
0480122 ..... 227, 233
0480126 ..... 279, 285
0480128 ..... 257, 263
0480129 .... 253, 257, 263, 279
0480131 269
0480135 241
0480142 ..... 245, 273
0561076 ..... 291, 297
0561300 .... 13, 14, 17, 18, 21, 23
0561459 ..... 301, 306
0561460 ..... 292, 298
0561511 23
0561515 309
0561696 301
0630401 ..... 313, 314
0630462 343
0630467 ..... 321, 325
0630498 .... 110, 121, 126, 136, 144, 156, 162, 170, 292, 298
0630518 .... 213, 369, 371, 377
0630534 .... 389, 393, 397, 405
0630535 403
0630544 18
0630548 213
0630568 346
0630569 .... 110, 162, 184
0641403 ... 253, 257, 263, 279, 285
0641404 ...37, 45, 83, 314
0641405 ... 130, 207, 241, 245, 254, 269, 273, 329
0641406 ... 110, 112, 120, 129, 137, 146, 158, 162, 164, 169, 170, 177, 184, 186, 293, 299, 305, 309, 333, 337, 339, 345, 369, 371, 375, 377, 514, 524, 532, 535
0641407 ... 138, 156, 220, 329
0641408 ..... 79, 110, 136, 162, 184, 223, 253, 257, 263, 269, 273, 279, 285, 293, 298, 333, 337, 509, 513, 518, 524, 528, 532, 535
0641409 129
0641410 ... 110, 122, 126, 138, 146, 158, 162, 170, 176, 177
0641414 ... 137, 146, 334, 338, 343
0641416 . 13, 17, 22, 207, 329, 345
0641418 ... 112, 122, 126, 139, 144, 156, 164, 169, 176, 186, 333
0641420 ..... 71, 72, 156
0641422 144
0641505 ..... 75, 253, 257, 263, 269, 291, 297
0641506 ... 110, 138, 146, 158, 162, 184, 213, 302, 306, 310
0641507 ... 110, 129, 140, 146, 162, 184, 291, 297
0641508 ..... 18, 156, 227, 234, 238, 241, 249, 279, 285
0641510 ... 101, 103, 121, 129, 170, 177, 245
0641512 ... 170, 176, 186, 417
0641514 245
0641516 ... 253, 257, 263, 269, 273, 279, 285, 329
0641518 .... 305, 309, 339
0641520 ..... 97, 105
0641524 298
0641526 ..... 321, 325
0641528 ..... 292, 298
0641530 ..... 71, 72
0641538 72
0641542 71
0641560 72
0641604 ... 138, 146, 158, 314, 417
0641605 .... 298, 313, 314

PART NUMBER INDEX

0641606..14, 18, 24, 223, 313, 321, 325, 369, 371, 375
0641607....13, 17, 21, 22, 29, 30, 35, 83, 151, 301, 305, 309, 313
0641608....114, 120, 128, 137, 170, 177, 193, 207, 223, 269, 291, 301, 305, 309, 313
0641609.....88, 110, 120, 129, 137, 146, 158, 162, 184
0641610....110, 112, 114, 120, 126, 129, 136, 144, 146, 156, 158, 162, 164, 165, 169, 170, 176, 177, 184, 186, 223, 227, 234, 257, 263, 269, 273, 280, 286, 291, 297, 301, 305, 309, 337
0641611....111, 129, 162, 185, 241, 269
0641612....112, 136, 146, 158, 164, 186, 241, 269
0641614....223, 253, 257, 263, 269, 273, 279, 285
0641616.....21, 305, 309
0641618 71, 72, 254, 257, 263, 280, 286, 305, 309
0641620.....21
0641626.....13, 18
0641708.....269
0641710.....245
0641718.....241
0641772....227, 233, 238, 249
0641806.....291, 297
0641808 79, 97, 105, 253, 257, 263, 273, 279, 285
0641810.....97, 105, 241, 269, 291, 297, 301, 305, 309
0641812.....22, 101, 103, 114, 120, 128, 135, 145, 157, 165, 170, 177, 184, 301, 305, 309, 325
0641814.....13, 17, 24
0641818.....87, 313, 314
0641820....110, 120, 129, 136, 146, 158, 162, 170, 177, 184, 321
0641822.....329
0641826.....24
0641832.....274
0642010.....22, 112, 121, 126, 137, 144, 156, 164, 169, 176, 186
0642012....13, 17, 18, 21, 22, 291, 297, 365
0642014.....291, 297
0642016.....291, 297
0642024.....329
0642026.....367
0642612.....219
0642684.... 321, 325, 329
0651405..... 83
0681608..... 325, 329
0681610..... 97, 105, 321
0681612..... 238
0681810..... 29, 30
0681814..... 87, 341
0681822..... 341
0681824..... 18
0681826..... 14
0681832..... 79
0681856..... 79
0682014..... 29, 30
0682016..... 75
0682038..... 87
0682040..... 87
0682048..... 87
0682248..... 13, 17, 22
0682648..... 18
0700808.... 110, 167, 188
0700810... 123, 131, 135, 158, 173, 179
0700816... 121, 129, 170, 177
0700819.... 137, 146, 158
0700820..... 245, 273
0701010..... 322
0701012... 120, 129, 138, 146, 170, 177
0701014... 129, 135, 146, 177
0701015... 120, 238, 241, 269
0701016.... 245, 269, 273
0701022..... 135, 146
0701217... 227, 249, 253, 279, 285
0711014..... 177
0711414... 120, 129, 170, 177
0721003..... 347
0721004..... 75, 110, 162, 184, 223, 257, 263, 269, 273, 280, 286
0721005..... 139, 343
0721006... 110, 135, 162, 184, 223, 225, 234, 238, 346
0721008... 225, 227, 234, 238
0721010..... 135
0741606..... 241, 269
0741607..... 75
0741610... 110, 121, 129, 138, 146, 158, 162, 170, 177, 184
0741808..... 241, 269
0760606..... 146
0760612..... 163, 186
0760810..... 163, 186
0771012..... 177
0771415..... 259, 265
0791506..... 14, 18, 24
0791606..... 314
0791607..... 314
0801192..... 313
0801260..... 313
0801272..... 291
0801273..... 291
0801288..... 301, 313
0801289..... 313
0801290..... 313
0801312..... 305, 313
0801356..... 297
0801357..... 297
0801361..... 309, 314
0801362..... 314
0801363..... 314
0801379..... 314
0801380..... 314
0801592..... 297
0801593..... 309, 314
0811608..... 274
0840055..... 329
0860038... 253, 257, 263, 269, 273, 279, 286, 498
0860520... 509, 513, 518, 524, 528, 531, 535
0861414..... 345, 346
0861419..... 213
0861420..... 212
0861421..... 212
0861422..... 212
0861423..... 212
0861427..... 212
0861428..... 212
0861441..... 345, 346
0861512.... 337, 345, 486
0861538... 253, 257, 263, 269, 273, 279
0861541... 254, 259, 265, 270, 274, 281, 286
0861542... 253, 254, 257, 259, 263, 265, 269, 270, 273, 274, 279, 281, 503
0861567... 257, 259, 263, 265, 279, 281, 285, 286, 503
0861572... 257, 263, 279, 285
0861595..... 211
0861596..... 211
0861597..... 211
0861598..... 211
0861726..... 212
0861727..... 212
0861728..... 211
0861729..... 211
0861731..... 498
0861740..... 212
0861741..... 212
0861742..... 212
0861743..... 212
0861769..... 213
0861770..... 213
0861781..... 498
0861880..... 499
0902109..... 88
0902206..... 219
0902443... 112, 122, 126, 138, 144, 156, 164, 169, 176, 186
0902444....112, 122, 126, 138, 144, 156, 164, 169, 176, 186
0902457.....140, 146
0902504.....223
0902520.....88
0902535.....207
0902539.....136, 148
0902724.....139
0902740....122, 129, 170, 177
0902751.....345
0902756.....238
0902888....253, 258, 269, 273, 279, 285
0902894.....329
0902919.....329
0902920.....329
0902952.....241
0903010.....148
0903063.....129
0903484.....499
0903612.....499
0940048.....291, 297
0940071.....223
0940083.....223
0940167.....343
0940177.....343
0940199.....365, 367
0961845.....333
0961890.....385
0961893.....397
0961897.....403
0961947....305, 309, 317, 389, 391, 397, 399, 405, 407, 425
0961948.....79, 313, 314
0961950....13, 17, 18, 21, 22, 291, 297, 313, 314, 401, 403, 427, 429
0961951..15, 19, 25, 305, 309, 393, 395, 397, 399, 409, 411, 423, 425, 431
0962140.....15, 19, 25
0962172....110, 121, 129, 137, 146, 158, 162, 170, 177, 184
0962185....389, 393, 405, 409
0962257.....315, 317
0962270.....341
0962293.....79
0962395.....385
0962450.....329
0962466.....385, 419
0962474.....385
0962520....253, 257, 263, 269, 273, 279, 285
1001091079.....223
1001091093.....225
1001091094.....225
1001091124.....225
1001091125.....225
1001091179.....129, 178
1001091560.....207
1001091567.....207

1001091583 158
1001091587 157
1001091600 158
1001091601 157
1001091602 156
1001091794 159
1001091970 500
1001091971 500
1001092723 ..... 129, 131, 177, 179
1001094337 ..... 467, 478
1001094475 545
1001094789 ..... 309, 423
1001095205 ..... 163, 166, 184, 187
1001095208 164
1001095210 165
1001095213 162
1001095217 164
1001095219 165
1001095221 162
1001095408 543
1001096070 499
1001096182 545
1001096617 ..... 293, 299
1001096954 213
1001096956 213
1001097150 499
1001097324 249
1001097325 249
1001097339 249
1001097400 ..... 279, 502
1001097401 ..... 279, 285, 502
1001097501 ..... 291, 301
1001097502 ..... 292, 301, 486
1001097503 ..... 292, 301, 486
1001097504 301
1001097551 ..... 163, 186
1001097552 ..... 164, 186
1001097553 ..... 164, 186
1001097554 ..... 116, 164, 186
1001097555 ..... 164, 186
1001097583 285
1001097588 ..... 164, 186
1001097893 ..... 164, 186
1001097968 225
1001098012 ..... 377, 381
1001098149 377
1001098446 ..... 443, 449
1001098567 224
1001098568 224
1001098640 ..... 297, 309
1001098840 ..... 216, 491, 492
1001098923 493
1001099833 313
1001099838 313
1001099926 ..... 164, 186, 496
1001099927 ..... 163, 186, 495
1001100321 ..... 227, 232, 237, 241, 249
1001100341 500
1001100342 500
1001100345 500
1001100346 500
1001100347 500
1001101160 225
1001101423 365
1001101424 ..... 365, 367
1001101910 498
1001101911 498
1001101912 498
1001101913 498
1001101914 498
1001101915 498
1001101916 498
1001102354 79
1001102446 ..... 365, 367
1001102648 367
1001105455 95
1001107008 542
1001107009 542
1001107010 542
1001110138 544
1001110143 544
1001110872 ..... 254, 258, 264, 280, 286
1001110873 ..... 254, 258, 264, 274, 280, 286
1001113961 ..... 359, 361
1001114034 544
1001114035 544
1001114059 544
1001114060 544
1001114061 ..... 543, 544
1001114063 544
1001114119 544
1001114120 544
1001114121 ..... 543, 544
1001114126 544
1001114128 544
1001114129 544
1001114137 544
1001114872 274
1001117254 542
1001117261 542
1001117320 338
1001118416 361
1001118417 ..... 345, 353
1001121340 ..... 255, 259, 265, 266, 275, 281
1001121610 542
1001129555 538
1001130758 543
1001137005 ..... 505, 546
1001138135 ..... 120, 130, 171, 179
1001139099 544
1001139127 542
1001139760 543
1001140274 391
1001140276 407
1001140278 411
1001140279 395
1001140282 399
1001140315 545
1001140318 545
1001141181 274
1001141968 498
1001141969 499
1001141970 498
1001141971 498
1001142504 545
1001142505 545
1001143256 545
1001144629 337
1001145838 543
1001148902 543
1001148903 543
1001148904 543
1001148905 543
1001148906 543
1001148971 545
1001149560 545
1001151644 544
1001151645 544
1001153016 105
1001153017 103
1001166538 363
1001166539 355
1001205175 545
1001212415 538
1001219625 546
1001225900 315
1001225902 313
1001227348 545
1001227349 545
1001228964 545
1001231277 107
1001231278 546
1060279 ..... 509, 513, 518, 524, 528, 531, 535
1060341 ..... 343, 504
1060343 ..... 254, 259, 265, 271, 274, 281, 503
1060461 ..... 488, 501
1060494 ..... 254, 259, 265, 271, 274, 281, 292, 488, 501, 503, 504, 505
1060584 75
1060625 ..... 114, 127, 165
1060626 ..... 114, 127, 165
1060633 505
1060663 339
1060708 ..... 254, 259, 265, 271, 274, 281, 503
1060896 ..... 487, 489
1060902 ..... 293, 299, 497
1060903 343
1060904 ..... 110, 129, 162, 179, 184, 495
1060908 499
1060918 ..... 334, 338, 486
1060919 341
1060977 504
1060987 ..... 292, 488, 505
1060988 ..... 302, 306, 488, 505
1060989 488
1060990 ..... 302, 488
1060991 ..... 292, 298, 488
1060996 ..... 310, 489
1100107 22
1100127 ..... 13, 17
1100133 ..... 13, 17, 22
1100134 22
1120108 401
1120484 208
1120487 208
1120532 207
1120552 32
1120555 ..... 365, 367
1180227 313
1180352 313
1180378 315
1271538 329
1283002 482
1283029 543
1283245 ..... 476, 477, 478
1283346 543
1283373 ..... 476, 477, 478, 479
1283460 ..... 476, 477, 478, 479
1320012 ..... 110, 137, 146, 158, 162, 184
1320016 ..... 110, 121, 129, 137, 146, 158, 162, 170, 177, 184
1320019 136
1320022 ..... 110, 112, 121, 126, 128, 129, 135, 137, 144, 146, 156, 158, 162, 164, 169, 170, 176, 177, 184, 186
1320023 151
1320032 139
1320033 146
1320060 ..... 136, 146, 216
1320061 ..... 293, 298
1320070 ..... 305, 309
1320136 329
1320176 ..... 122, 130, 173, 178
1320177 ..... 298, 375, 377
1320202 ..... 302, 306, 310
1320218 151
1320220 151
1320222 ..... 122, 129, 139, 177, 339
1320223 ..... 112, 127, 129, 139, 146, 158, 164, 169, 170, 186
1320224 329
1320300 ..... 292, 298
1320302 ..... 369, 371, 375
1320323 156
1321138 146
1321692 ..... 293, 298, 488
1321694 ..... 293, 488
1321695 292
1321696 306
1321738 298
1340060 ..... 110, 121, 129, 137, 146, 158, 162, 170, 177, 184
1340061 542
1580011 ..... 110, 137, 148, 158, 162, 184
1580012 ..... 334, 339
1580013 ..... 334, 339
1580049 185

PART NUMBER INDEX

1600244.....505
1600314.....136
1600317.....345, 351
1600318.....345, 359
1600320.....345
1600327.....213
1600363.....140
1600364.....213
1600374.....148
1600376.....345, 540
1600387.....329
1600411.....213, 540
1641422.....136
1660234....123, 131, 173, 179
1660250.....139, 147
1660255.....110, 162, 184
1670678.....314
1670829.....213
1670964.....321, 325
1670998.....293, 299
1671013.....291, 297
1671037.....345
1671079.....315
1671083.....309
1671086.....293, 299
1671092....254, 259, 265, 271, 275, 281, 488, 489, 503
1671093.....371, 488, 489
1671111.....315
1671176.....345
1682892.....417
1683050.....389, 405
1683051.....397
1683052.....393, 409
1683063.....403
1683076.....385, 413
1683504.....401
1683572.....385
1683614...14, 18, 25, 413
1683615.....413
1683658.....413, 415
1683756.....409
1683759.....393
1683760.....305, 393
1683761.....393
1683772.....409
1683773.....305, 409
1683800.....417
1683802.....417
1683946.....401
1683947.....401
1683959.....305, 397
1683960.....397
1683961.....397
1684059.....401
1684060.....401
1684067.....403
1684069.....403
1684070.....291, 403
1684095.....314, 417
1684096.....417
1684098.....417
1684129...14, 17, 22, 385
1684130.....385
1684140.....314, 417
1684154..... 305, 401
1684155..... 301, 401
1684165..... 301, 389
1684166..... 389
1684167..... 389
1684170..... 301, 405
1684171..... 405
1684172..... 405
1684239..... 297, 429
1684240..... 309, 423
1684241..... 309, 431
1684242..... 310, 425
1684243..... 22, 419
1684244..... 309, 427
1684246..... 25, 433
1684262..... 315, 435
1684290..... 387, 421
1684412...14, 18, 25, 415
1684465. 14, 17, 22, 387, 421
1693292..... 528, 532
1693294..... 528, 532
1700584... 509, 513, 518, 523, 527, 531, 535
1700818... 509, 514, 519, 524
1701500... 509, 513, 518, 524, 527, 531, 535
1701502... 509, 513, 518, 523, 527, 531, 535
1701503... 509, 513, 518, 523, 527, 531, 535
1701504... 509, 513, 518, 523, 527, 531, 535
1701505... 112, 122, 126, 164, 170, 176, 186, 509, 514, 518, 524, 528, 532, 535
1701509... 365, 367, 509, 513, 518, 524, 527, 531, 535
1701518..... 75, 527, 531, 535
1701529... 509, 513, 518, 524, 528, 531, 535
1701542... 138, 144, 156, 509, 514, 518, 524
1701543... 144, 156, 509, 514, 518, 524
1701600..... 528, 532
1701645..... 509, 513
1701791..... 528, 532
1702153..... 509, 513
1702300... 509, 513, 518, 524, 527, 531, 535
1702564..... 345
1702565..... 345
1702566..... 345
1702567..... 345
1702590..... 242
1702610..... 214
1702676..... 347
1702688..... 509, 513
1702720..... 519, 524
1702740..... 32
1702773... 509, 513, 518, 521, 527, 531, 535
1702774... 509, 513, 517, 521, 527, 531, 535
1702784... 509, 513, 517, 521
1702868... 371, 375, 377, 509, 513
1702938..... 343, 347
1702941.... 112, 127, 164
1702942.... 112, 127, 164
1702943.... 114, 127, 165
1702944.... 114, 127, 165
1702961..... 514, 543
1702962..... 514, 543
1703067..... 32
1703084..... 348
1703162... 112, 122, 129, 138, 146, 158, 162, 170, 177, 185
1703175..... 543
1703450..... 75
1703486... 509, 514, 518, 524, 528, 532, 536
1703518..... 528, 532
1703689..... 347
1703690..... 214
1703691..... 214
1703797..... 509, 513
1703798..... 509, 513
1703804..... 509, 513
1703805..... 509, 513
1703808... 509, 513, 517, 521
1703876... 111, 122, 126, 138, 144, 156, 162
1703923..... 517, 521
1703924..... 517, 521
1703925..... 517, 521
1703926..... 517, 521
1703927..... 517, 521
1703928..... 517, 521
1703929..... 517, 521
1703930..... 517, 521
1703931..... 517, 521
1703932..... 517, 521
1703933..... 517, 521
1703934..... 517, 521
1703935..... 517, 521
1703936..... 517, 521
1703937..... 517, 521
1703938..... 517, 521
1703939..... 517, 521
1703940..... 517, 521
1703947..... 517, 521
1703948..... 517, 521
1703949..... 517, 521
1703950..... 517, 521
1703951..... 517, 521
1703952..... 517, 521
1703980..... 518, 524
1703981..... 518, 524
1703982..... 518, 524
1703983..... 518, 524
1703984..... 518, 524
1703985..... 518, 524
1703992.... 527, 531, 535
1703996..... 518, 522
1704000..... 518, 522
1704001.....518, 522
1704002.....518, 522
1704006.....518, 523
1704007.....518, 523
1704008.....518, 523
1704112.....518, 522, 523
1704150.....543
1704260.....216, 345
1704271.....519, 524
1704277....509, 513, 518, 522, 527, 531, 535
1704412....509, 514, 519, 524, 528, 532, 535
1704455.....75
1704456.....76
1704457.....75
1704482.....75
1704576.....75
1704577.....75
1704578.....75
1704586.....79
1704767.....527, 531
1704808.....527, 531
1704809.....527, 531
1704810.....527, 531
1704811.....527, 531
1704812.....527, 531
1704819.....527
1704820.....527
1704821.....527
1704822.....527
1704823.....527
1704824.....527
1704885....509, 514, 519, 524, 528, 532, 535
1704951.....527
1704957.....527
1704972....113, 127, 157, 165
1705014.....341
1705042.....523
1705084.....527, 531, 535
1705091.....472
1705132.....216, 346
1705212.....348
1705270.....531
1705272.....531
1705275.....532
1705305....369, 371, 375, 377
1705325.....499
1705332.....531, 535
1705355.....369, 371
1705358.....365, 367
1705363.....510, 514
1705364.....32
1705375....255, 259, 265, 271, 275, 281, 371
1705376....254, 259, 265, 271, 274, 281, 286
1705387....255, 259, 265, 271, 275, 281
1705408.....531
1705409.....531
1705410.....531
1705411.....531
1705412.....531

1705413 531
1705460 ... 255, 259, 265, 271, 275, 281, 287
1705461 ... 259, 265, 281, 287
1705466 ... 369, 371, 375, 377
1705489 ... 259, 265, 281, 287
1705490 ..... 375, 377
1705514 524
1705752 214
1705753 214
1705821 ..... 532, 535
1705822 ..... 532, 535
1705828 535
1705969 522
1706059 ... 113, 127, 157, 165
1706060 ... 113, 127, 157, 165
1706061 ... 114, 128, 157, 165
1706062 ... 113, 127, 157, 165
1706063 ... 114, 128, 157, 165
1706064 ... 113, 127, 157, 165
1706098 .... 113, 177, 187
1706385 341
1706712 214
1706920 214
1706921 214
1706931 ..... 513, 521
1706941 ..... 513, 521
1707013 513
1707044 523
1707047 523
1707049 523
1707054 523
1707055 522
1707056 522
1707058 522
1707059 522
1707060 522
1707133 523
1707134 522
1787217 .... 170, 176, 186
1810118 213
1810119 212
1810120 212
1810121 ..... 211, 213
1810122 213
1810123 212
1810124 212
1810125 ..... 211, 213
1870144 483
1870191 483
1870215 483
2000172 ..... 135, 139
2000174 .... 135, 139, 151
2000175 ..... 120, 122
2000188 .... 135, 139, 151
2000190 ... 120, 122, 170, 171
2000195 ..... 110, 115
2000197 .... 135, 139, 151
2000207 ..... 146, 147
2000212 145
2000217 ... 129, 131, 170, 171
2000228 170
2000240 128
2000243 128
2000244 128
2000254 145
2000255 145
2000273 ... 129, 131, 177, 179
2000288 128
2000289 128
2000290 128
2000291 177
2000314 145
2000315 110
2000316 145
2000317 145
2000318 114
2000319 114
2000338 ... 129, 131, 177, 179
2000345 128
2000354 158
2000355 158
2000357 157
2000363 128
2000364 128
2000388 110
2000389 114
2000396 184
2030004 145
2030010 ... 369, 371, 375, 377
2060025 ... 121, 129, 137, 146, 158, 170, 177
2060032 .... 110, 162, 184
2080040 .... 333, 337, 338
2080057 ..... 532, 535
2110404 ... 439, 441, 443, 445, 447, 449, 460, 463, 468, 471
2110406 ... 193, 439, 441, 445, 447, 456, 460, 463, 467, 471
2110410 471
2110604 ... 114, 166, 455, 459, 463, 467, 471
2110606 ... 439, 441, 443, 445, 447, 449, 459, 471
2110806 451
2110808 ... 451, 455, 459, 463, 467
2110812 ..... 463, 467
2111010 ... 114, 166, 179, 184, 193, 198, 451, 463
2111212 ... 451, 455, 459, 463, 468, 471
2111216 .... 460, 463, 471
2111612 ... 114, 166, 179, 184, 198, 464
2111616 ... 114, 193, 451, 455
2111620 .... 451, 455, 459, 463, 467, 471
2120150 83
2120163 83
2120209 83
2120210 ..... 83, 538
2130404 .... 441, 443, 447, 449, 451, 455, 459, 463, 467
2130406 ..... 463, 467, 471
2130604 .... 114, 166, 439, 441, 445, 447, 471
2130606 .... 443, 449, 471, 472
2130608 ..... 417, 451, 471
2130808 .... 451, 455, 463, 467
2130812 .... 451, 455, 459, 463, 467
2131008 .... 451, 455, 459, 463, 467
2131012 ..... 451, 463
2131210 ..... 114, 166, 471
2131212 .... 114, 166, 179, 184, 193, 198, 451, 455, 463
2131216 .... 451, 456, 460, 463, 468
2150404 .... 441, 443, 447, 449, 471
2150606 471
2150808 471
2151212 .... 114, 166, 179, 184, 464
2151612 455
2151616 .... 114, 193, 198, 451
2160001 ..... 18, 87
2160002 ..... 18, 88
2160003 ..... 101, 103
2170106 471
2170206 471
2170306 443
2170308 463
2170316 .... 114, 166, 179, 185, 201, 471
2170404 ..... 439, 445
2170406 471
2170504 .... 441, 443, 447, 449, 451, 455, 459, 463, 467, 471
2170506 .... 441, 443, 447, 449
2170512 ..... 460, 468
2170516 ..... 451, 455
2170706 472
2170808 .... 114, 166, 179, 185, 201, 471, 472
2180344 88
2180348 .... 126, 144, 156, 164, 170, 176
2180387 151
2180389 151
2180467 ..... 137, 146
2180482 ..... 110, 162, 184
2180504 151
2180536 ... 112, 122, 169, 186
2180798 ... 110, 121, 129, 137, 146, 170
2180822 88
2180832 ..... 375, 377
2180877 159
2200221 ..... 129, 178
2200222 ... 113, 122, 126, 138, 144, 157, 165, 170, 176, 187, 208
2200261 88
2220001 88
2220124 88
2220235 . 13, 18, 21, 443, 449, 451, 463
2220238 .... 451, 455, 459
2220240 .... 451, 455, 475
2220250 ... 112, 121, 138, 164, 169, 186
2220273 ... 113, 121, 137, 165, 170, 187
2220290 151
2220313 ... 112, 121, 126, 138, 144, 157, 164, 169, 176, 186
2220409 120
2220451 ... 120, 129, 170, 178
2220459 ... 112, 122, 164, 169, 186
2220794 ... 112, 121, 137, 164, 169, 187
2220805 138
2220829 298
2220883 ..... 59, 67, 417
2220885 ... 385, 389, 397, 401, 405
2220886 ..... 59, 67, 403
2220888 67
2220890 ..... 387, 421
2221037 299
2221083 ..... 439, 445
2221084 ... 114, 166, 179, 185, 193, 198, 451, 463
2221085 .... 459, 463, 467
2221086 471
2221087 ..... 451, 455
2221088 ... 451, 455, 459, 463, 467
2221090 475
2221176 ... 126, 144, 156, 170, 176
2221183 ..... 460, 468
2221216 ... 452, 455, 459, 464, 468
2221296 ..... 459, 468
2300004 ... 113, 157, 165, 187, 545
2300014 ..... 544, 545
2300016 ..... 31, 545
2300019 545
2300027 545
2300029 545
2300039 545
2300040 544
2300041 ..... 165, 545

PART NUMBER INDEX

2400060....255, 259, 265, 271, 275, 281, 287, 493, 504
2400061.....493
2400064....255, 259, 266, 271, 275, 281, 287, 504
2400065.....494, 495, 538
2400066.....495, 505
2400070.....505, 540
2400093.....540
2410014.....341
2420115.....207
2420172.....215
2420187.....139, 147
2420202.....329
2420203....228, 233, 237, 242, 245, 249
2460011.....237
2460013....227, 231, 232, 237
2460032.....227, 231, 237
2460034.....231, 237
2460039.....231, 232
2460044.....237
2460048....253, 257, 263, 269, 273, 279, 285
2460049.....232, 249
2460051.....241, 245
2460052.....241
2460055....227, 231, 232, 249
2460056....227, 231, 232, 249
2460057.....231, 232, 249
2560136.....345
2560173.....339
2570008.....415
2580024....112, 127, 164, 165
2580050.....114, 127, 165
2580054.....112, 164
2580062.....131
2600210.....225
2600211.....346
2600216.....333
2600219.....333
2600246.....225
2600281.....337
2720058....110, 112, 121, 128, 137, 144, 157, 158, 162, 164, 169, 176, 184, 187
2720149.....151
2720160.....375, 377
2720271....112, 122, 165, 169, 187
2720351.....121
2720434....121, 129, 170, 178
2720435.....138, 146
2720436.....137, 146
2720449....121, 129, 170, 178
2720467....120, 129, 170, 178
2720468.....152
2720496.....138, 144
2720507.... 110, 162, 184
2720508.... 110, 162, 184
2720514..... 146, 158
2720563..... 158
2720564..... 158
2720565..... 156
2720566..... 156
2720567..... 156
2720646..... 299
2750529..... 88
2750532... 110, 112, 121, 126, 129, 135, 137, 144, 147, 157, 158, 162, 165, 169, 170, 176, 178, 184, 187
2750807..... 88
2753537..... 468
2753538... 451, 455, 459, 464, 468
2753540... 439, 445, 464, 467
2753541..... 464, 467
2753542..... 464, 471
2753543..... 439, 445
2753544..... 439, 441
2753545..... 471
2753546..... 471
2753547..... 471
2753548..... 472
2753549..... 472
2753550..... 472
2753551..... 472
2753552..... 472
2753553..... 472
2753554..... 471
2753555..... 464
2753556..... 472
2753557..... 472
2753558..... 471
2753559..... 472
2753560..... 472
2753561..... 472
2753562..... 472
2753563..... 472
2753565..... 472
2753566..... 472
2753567..... 472
2753568..... 472
2753569..... 472
2753570..... 472
2753571..... 472
2753572..... 472
2753573..... 472
2753574..... 472
2753575..... 452
2753576..... 439, 445
2753577... 439, 441, 445, 447
2753578... 456, 459, 464, 468
2753579... 452, 455, 459, 464, 467
2753580..... 464, 467
2753581..... 464, 467
2753582..... 459, 464
2753584..... 464
2753585..... 456, 464
2753587..... 452
2753588... 452, 456, 459, 464, 468
2753589..... 472
2753590..... 472
2753591..... 472
2753592..... 452
2753593..... 452
2753594... 455, 459, 464, 468
2753595... 455, 459, 464, 468
2753596..... 452
2753597..... 456, 464
2753598..... 464
2753599..... 464
2753600..... 464
2753601..... 464, 467
2753602..... 464, 468
2753603..... 464
2753604.... 460, 464, 468
2753605... 452, 455, 459, 467
2753607..... 452, 455
2753608..... 452, 456
2753609..... 452, 456
2753610... 452, 456, 459, 464, 468
2753611..... 472
2753612..... 472
2753613..... 472
2753614..... 472
2753615..... 475
2753616..... 475
2753625... 441, 443, 447, 449
2753661..... 464, 468
2753675.... 455, 459, 472
2753688..... 460
2753698..... 460, 468
2753727..... 443
2753752..... 455, 464
2753782..... 443, 449
2753787..... 460, 468
2753843..... 460, 468
2753851..... 449
2753909..... 452, 455
2753934... 441, 443, 447, 449
2753935..... 441, 447
2753936..... 441, 447
2753937..... 441, 447
2753939... 443, 449, 456, 460, 464, 467
2753940... 452, 456, 460, 464, 467
2754244..... 467
2754471.... 443, 459, 468
2754702..... 472
2754722..... 464, 467
2754723..... 464
2754724..... 464
2754725..... 464
2754726..... 464, 467
2755076..... 459
2760105..... 215
2760112..... 148
2780221.....79
2780230.....14, 15, 18, 19
2780256.....29, 30, 37
2780257.....30, 31, 45
2780267.....29, 30, 41
2780268.....31, 49
2792468.....471, 478
2792469.....471, 478
2792470.....451, 477
2792471.....463, 477, 478
2792472.....439, 476
2792473.....475, 479
2792474.....445, 476
2792518.....479
2792580.....471, 478
2792583.....471, 477
2792590.....471, 477
2792619.....441, 476
2792620.....447, 476
2792706.....451, 477
2792708.....463, 477, 478
2792724.....471, 478
2792725.....471, 478
2792726.....463, 478
2792729.....463, 478
2792753.....455, 477
2792777.....443, 476
2792778.....449, 476
2792779.....476
2792780.....479
2792782.....467, 478
2792783.....467, 478
2792784.....477
2792785.....459, 477
2820018.....164, 186, 496
2820031....228, 234, 238, 242, 245, 250, 258, 264, 280, 285, 487, 488
2820035....207, 219, 220, 334, 338
2820099.....225
2820100.....225
2820118.....487, 489
2820130.....224
2820172.....146
2820173.....146
2820174.....147
2820175.....224
2820176.....224
2820177.....224
2820647.....310
2860012.....234, 238
2860030.....215, 538
2900714.....53
2900752.....191, 192, 193
2900770....385, 401, 417, 419, 423, 425, 427, 429, 435
2900792....389, 391, 393, 395, 397, 399, 403
2900804.....80
2900826.....193
2901443.....505, 545
2901547.....413
2901548.....385
2901549.....389, 405
2901776.....393, 409

2901810 397
2902044 403
2902059 .... 138, 144, 495
2902060 ... 110, 121, 128, 162, 171, 178, 184, 495
2902073 417
2902074 401
2902217 ..... 369, 371
2902266 ..... 387, 421
2902400 26
2902409 415
2902443 495
2902510 ..... 157, 495
2902549 499
2910495 544
2910496 544
2910947 544
2915014 213
2915133 346
2915239 540
2920110 219
2920113 219
2920129 495
2920140 .... 334, 338, 505
2920146 219
2920154 345
2920157 ..... 219, 339
2920162 .... 228, 233, 237
2940074 .... 333, 337, 538
2940109 225
3010140 298
3020008 31
3020016 ... 129, 166, 178, 187, 545
3020021 ... 123, 131, 173, 179, 545
3020029 ..... 26, 87
3020043 415
3020044 .... 130, 166, 545
3124114 ..... 136, 140
3160158 ..... 29, 53
3160260 ..... 31, 63
3160266 ..... 31, 63
3160278 ..... 87, 91
3160287 ..... 87, 88, 91
3160298 ..... 29, 55
3160348 ..... 31, 67
3160351 ..... 29, 59
3160352 67
3200378 ... 111, 120, 136, 162, 171, 184
3200406 ... 130, 146, 158, 171, 178
3220110 ... 122, 130, 173, 178
3220112 ..... 122, 173
3220113 ... 111, 140, 163, 184
3220114 140
3220134 148
3220154 .... 111, 163, 184
3250585 339
3250872 76
3251102 ... 228, 234, 238, 245, 250, 347
3251242 .... 528, 531, 535
3251243 ... 238, 242, 245, 509, 513, 518, 524
3251813 ... 509, 513, 518, 523
3252221 519
3252347 ..... 509, 528
3252507 .... 499, 509, 518
3252692 76
3252693 76
3252764 ... 242, 258, 264, 270, 274, 280, 286
3252768 ... 509, 514, 519, 524, 528, 532, 535
3271805 ..... 79, 341
3272005 75
3272201 ..... 14, 17, 22
3272605 ..... 18, 321, 325, 329
3290405 156
3290501 .... 113, 165, 187
3290505 156
3290601 .... 113, 165, 187
3290605 .... 164, 186, 377
3290801 ..... 164, 186
3300106 ..... 29, 31
3300151 ... 301, 306, 333, 369, 371, 375
3300205 215
3300220 .... 111, 163, 185
3300255 79
3300279 401
3300315 401
3300353 345
3300396 ... 254, 259, 265, 271, 274, 281, 286
3300408 ..... 215, 345
3300420 ..... 292, 298
3310601 ... 254, 259, 265, 271, 274, 281, 286
3310805 152
3311001 ... 219, 333, 337, 347
3311005 ... 111, 135, 139, 163, 185, 219, 224, 225, 228, 234, 238, 242, 245, 250, 258, 264, 270, 274, 280, 286, 293, 299, 346, 369, 371, 377
3311401 ... 171, 178, 215, 223, 301, 306, 314, 343
3311402 310
3311405 . 14, 17, 24, 111, 112, 120, 126, 130, 136, 137, 144, 146, 156, 158, 163, 165, 169, 171, 176, 178, 185, 187, 207, 223, 242, 245, 254, 258, 264, 270, 274, 280, 286, 293, 298, 305, 310, 329, 333, 334, 338, 339, 345, 369, 371, 375, 377, 509, 514, 518, 524, 528, 532, 535
3311501 .... 305, 310, 343
3311505 71, 72, 111, 121, 130, 138, 140, 146, 156, 159, 163, 170, 171, 176, 178, 185, 187, 223, 245, 254, 258, 264, 270, 274, 280, 286, 298, 302, 306, 310, 314, 315
3311508 329
3311601 ..... 207, 223, 346
3311605 72, 88, 111, 120, 126, 130, 136, 144, 146, 156, 159, 163, 170, 171, 178, 185, 223, 225, 228, 234, 238, 254, 258, 264, 270, 274, 280, 286, 291, 292, 297, 298, 301, 305, 309, 310, 314, 315, 321, 338, 341, 369, 371, 375
3311705 .... 228, 234, 238, 250
3311801 . 29, 30, 258, 264
3311805 .... 111, 120, 130, 136, 146, 159, 163, 171, 178, 185, 274, 301, 305, 309, 310, 321, 325, 329
3312005 .... 112, 121, 126, 137, 144, 156, 165, 169, 176, 187, 291, 297, 329, 365, 367
3312008 ..... 14, 18, 25
3322201 ..... 14, 18, 25
3322205 417
3323003 ..... 14, 18
3340399 .... 111, 112, 121, 126, 130, 136, 144, 146, 156, 159, 163, 165, 176, 178, 185, 187
3340608 298
3340679 417
3340837 ..... 314, 315
3340860 305
3340881 ..... 314, 315
3340911 72
3340914 ..... 291, 297
3340940 ..... 314, 315
3340943 310
3340956 ..... 365, 367
3340958 ..... 169, 171, 176
3380434 ..... 334, 338
3380445 223
3380505 35
3380610 35
3380652 545
3380694 156
3420156 346
3420372 75
3420447 75
3421453 377
3421565 75
3422177 ..... 301, 305, 309
3422178 ..... 301, 305, 309
3422179 301
3422180 301
3422454 301
3422520 ..... 14, 17, 22
3422558 301
3422568 ..... 291, 297
3422582 ..... 305, 309
3422592 ... 13, 14, 17, 18, 21, 22
3422664 ..... 291, 297
3422669 ..... 305, 310
3422692 ..... 14, 18
3422716 25
3422786 79
3422791 ..... 305, 310
3422792 ..... 305, 310
3422793 .... 301, 305, 310
3422794 ..... 305, 310
3422804 314
3422806 ..... 305, 309
3422841 75
3422847 75
3422848 18
3422912 ..... 291, 297
3422913 ..... 291, 297
3422996 315
3423015 297
3423081 25
3450608 ..... 15, 19
3450808 15
3450812 19
3460334 ..... 365, 367
3460373 224
3480232 ..... 389, 405
3480239 417
3480240 401
3480247 ..... 393, 409
3480249 397
3480253 403
3480288 ..... 387, 421
3510693 333
3510716 333
3510738 333
3510742 333
3510744 333
3510754 333
3510779 333
3510780 333
3510781 333
3510825 333
3510830 337
3510831 337
3510832 337
3510884 341
3520028 ... 228, 233, 234, 237, 238, 241, 245, 249, 345
3520035 ..... 216, 489
3520072 .... 333, 337, 341
3520172 333
3520174 346
3520189 ... 259, 265, 281, 286, 503
3520192 ..... 265, 286
3520198 337
3536089 ..... 334, 338
3539219 215
3539685 333
3539972 135

PART NUMBER INDEX

3570535.....301
3570571....111, 120, 130, 136, 147, 159, 163
3570607....120, 130, 136, 146
3570801.....120, 171, 178
3570901.....13, 18, 21
3570958.....314
3571008....111, 138, 147, 159, 163
3571009....111, 138, 147, 159, 163
3571019....111, 138, 146, 159, 163
3571462.....306, 309
3571498.....135
3571502.....136, 146
3571818.....79
3571833.....79
3571860.....79
3571975.....19
3572009.....75
3572010.....75
3572011.....75
3572012.....75
3572102.....75
3572448.....315
3572551.....305
3572600.....136
3572691.....291, 297
3572750.....291
3572826.....291
3573024.....223
3573400.....369, 371, 375
3573641.....371, 375
3573642.....369, 371
3573643.....375
3573667....111, 130, 146, 159, 163
3573668.....264
3573895.....171, 178
3573937.....171, 178, 185
3574066.....297, 298
3574162.....137
3574163....254, 258, 264, 270, 274, 280, 286
3574224.....270
3574225.....242, 270
3574253.....111, 163
3574259.....111, 163
3574264.....111, 163
3574282.....163, 186
3574496.....137, 146
3574523....254, 258, 264, 270, 274, 280, 286
3574532.....302, 306, 310
3575359.....343
3575705.....343
3576799.....377
3576939.....80
3576972.....130
3577121.....369
3577130.....185
3577131.....185
3577132.....185
3577133.....185
3577134.....185
3577135..... 185
3577139..... 185
3580134... 228, 233, 237, 250
3580158..... 231
3580250..... 237
3580276... 228, 233, 237, 250
3580307..... 237
3580312... 242, 245, 270, 274
3580313..... 242, 270
3580314..... 270, 274
3580315..... 228, 250
3580316.... 254, 280, 286
3580317... 254, 258, 264, 280, 286
3580318... 254, 258, 264, 280
3580319... 258, 264, 280, 286
3580320..... 258, 264
3580324..... 242, 245
3580325..... 242
3580348..... 245, 274
3600279... 114, 120, 130, 138, 146, 159, 171, 178, 203
3600296... 115, 120, 135, 171, 195
3600316... 115, 120, 135, 191
3600318... 115, 120, 135, 166, 171, 178, 185, 201
3600377..... 139, 147
3600385... 115, 120, 135, 166, 171, 178, 185, 195
3600406.... 128, 145, 191
3600407... 128, 145, 158, 195
3600408.... 128, 145, 201
3600423... 114, 130, 159, 166, 178, 185, 203
3600441..... 158, 201
3620033... 120, 130, 171, 178
3620040.... 136, 147, 159
3620046.... 111, 163, 185
3640986... 255, 260, 271, 276, 282, 286
3641533... 255, 260, 266, 271, 276, 282, 287
3641569..... 343
3730120..... 494
3730125..... 494
3740049.... 215, 504, 538
3740067... 111, 121, 130, 137, 147, 159, 163, 178, 185, 538
3740080... 111, 163, 185, 228, 234, 238, 242, 245, 250, 254, 258, 264, 270, 274, 280, 286, 540
3740140..... 171, 178
3760115..... 314, 315
3760170..... 75
3760318..... 417
3760367... 385, 389, 397, 405, 413
3760368..... 393, 409
3760371..... 403
3780117..... 321, 325
3780182..... 26
3790012... 144, 156, 219, 345, 347
3790045..... 29, 31
3790113..... 417
3790152... 115, 121, 128, 135, 145, 158, 166, 171, 178, 185
3820001..... 76, 509, 514, 518, 524, 528, 532
3820020..... 337
3841143..... 19, 301, 305, 309, 310
3841203..... 79, 301, 306, 309, 310
3841220..... 14
3841258... 13, 14, 17, 18, 21, 22, 291, 297, 309
3841329..... 75
3841367..... 25
3841377..... 15
3841458..... 19
3841517..... 15, 19, 25
3841520..... 17, 22, 23
3860096..... 292, 298
3900054..... 341
3900109..... 15, 19, 25
3900139..... 389, 405
3900142..... 401
3900170..... 401
3900205..... 337
3900224..... 346
3900232..... 223, 225
3900254... 113, 121, 126, 137, 144, 156, 165, 169, 176, 187
3900268..... 215
3900283..... 315, 329
3900316..... 315
3900322..... 242
3910606... 254, 258, 264, 270, 274, 280, 286
3910610... 254, 259, 265, 271, 275, 281, 287
3910804..... 215
3910808..... 152
3911008..... 333
3911014..... 219
3911018..... 346
3911040..... 219
3931016..... 409
3931024.... 293, 294, 299
3931030.... 293, 294, 299
3931516... 385, 389, 393, 397, 405, 409, 413
3931620... 114, 128, 135, 145, 158, 166, 185
3931672..... 346
3931824..... 403
3941406..... 315
3951402..... 401, 417
3951420.....310
3960407....121, 130, 171, 178
3960422....254, 258, 264, 270, 274, 280, 286, 499, 503
3960438....111, 138, 144, 158, 163, 185
3960461.....219
3960462.....223
3960464.....223
3960526.....31
3960591.....147
3980007.....112, 127, 164
3990001.....494, 540
3990010.....490, 502, 538
3990108.....322
4010608.....377
4032015.....258, 264
4060092.....499
4060700....254, 258, 264, 270, 274, 280, 286, 499, 503
4060802....228, 234, 238, 242, 245, 250, 254, 258, 264, 270, 274, 280, 286, 339, 347
4060803.....294, 299, 333
4060805.....224
4060865.....219
4060906.....215
4060950.....15, 25
4060959.....545
4061010.....224
4061020....13, 14, 17, 21, 23, 35
4061021.....29, 31, 35
4061032.....292, 298
4061043....254, 258, 264, 270, 274, 280, 286, 503
4061054.....329
4070410.....207
4070497....111, 121, 130, 136, 147, 159, 163, 185
4070498....111, 121, 130, 136, 147, 159, 163, 185
4070897.....314
4070898.....314
4070972.....13, 18
4070973.....13, 18, 21
4070974.....13, 18, 21
4070982.....314
4070991.....215
4071056.....315
4071057.....315
4100025.....140
4100099.....403
4120035.....490
4130363.....25
4130364.....25
4130391.....25
4130392.....26
4130405.....25
4130406.....25
4130407.....26
4160170.....223
4220162.....219

4220165 333
4220244 306
4220267 21
4240018 ... 242, 245, 292, 298
4240032 219
4240033 ..... 322, 329
4240099 ... 122, 126, 138, 144, 156, 170, 176, 292, 334, 338, 343, 369, 371, 375
4240136 207
4240145 207
4240149 ..... 365, 367
4280295 207
4300157 ..... 258, 264
4340738 ..... 242, 270
4340745 .... 130, 147, 159
4341177 224
4341301 377
4341389 224
4341390 224
4341415 ..... 365, 367
4360031 ..... 334, 338
4360057 ..... 343, 540
4360070 ... 254, 259, 265, 271, 275, 281, 287
4360188 151
4360232 .... 347, 504, 540
4360294 234
4360321 .... 293, 299, 497
4360328 ... 215, 346, 347, 538
4360331 ..... 347, 538
4360336 ... 144, 156, 219, 228, 234, 238, 242, 245, 250, 254, 258, 264, 270, 274, 280, 286, 339, 347, 540
4360387 ... 343, 346, 347, 538
4360392 ... 111, 121, 129, 137, 147, 171
4360407 ..... 346, 538
4360436 207
4360469 ..... 215, 540
4360470 ..... 215, 540
4360475 .... 215, 346, 538
4360476 .... 215, 346, 538
4360542 ... 228, 232, 233, 237, 241, 245, 249
4360548 ... 293, 294, 299, 497, 540
4400275 151
4400408 207
4400420 151
4400435 207
4400451 ..... 207, 208
4420014 ..... 365, 367
4420037 ... 339, 369, 371, 375
4420051 ..... 76, 514, 524, 532, 535
4420055 333
4420066 ..... 365, 367
4420068 343
4460007 346
4460023 .... 228, 234, 238
4460027 ... 228, 233, 241, 245, 249
4460049 343
4460051 ... 258, 264, 280, 286, 503
4460071 ... 254, 258, 264, 280, 286, 334, 338, 486, 499, 503
4460125 498
4460134 ..... 500, 501
4460190 ... 228, 233, 237, 241, 245, 249
4460205 .... 499, 500, 501
4460224 497
4460225 ... 254, 258, 265, 270, 274, 280, 286, 486, 503
4460226 ... 293, 299, 329, 338, 356, 363, 486, 489, 490, 495, 496, 497, 502, 503, 504, 505
4460227 ... 486, 490, 491, 504
4460233 ..... 499, 501
4460234 ..... 219, 343
4460265 ..... 356, 363
4460267 .... 219, 491, 504
4460268 ... 220, 491, 492, 504
4460320 .... 219, 491, 504
4460321 ..... 502, 505
4460346 ... 254, 258, 264, 270, 274, 280, 286, 498, 503
4460374 ... 255, 259, 265, 271, 275, 281, 287, 504
4460375 ... 255, 259, 265, 271, 275, 281, 287, 504
4460411 ... 255, 260, 266, 271, 275, 281, 287
4460412 ... 255, 260, 266, 271, 275, 281, 287
4460413 ... 255, 260, 266, 271, 275, 282, 287
4460414 ... 255, 260, 266, 271, 275, 282, 287
4460415 ... 255, 260, 266, 271, 275, 282, 287
4460418 ..... 486, 490
4460419 ..... 486, 490
4460424 ... 220, 491, 492, 504
4460425 ... 254, 259, 265, 271, 275, 281, 287, 292, 293, 298, 343, 487, 488, 503, 504
4460426 ... 215, 254, 259, 265, 271, 275, 281, 287, 339, 347, 489, 503, 505
4460428 ... 293, 299, 346, 486, 497
4460434 ..... 486, 490
4460457 493
4460458 ..... 275, 493
4460459 ..... 504, 505
4460464 .... 164, 186, 338, 346, 486, 487, 489, 490, 496
4460465 .... 255, 259, 265, 271, 275, 281, 287, 329, 487, 489, 493, 494, 504
4460466 ..... 329, 487, 489
4460467 ..... 505, 546
4460470 .... 215, 346, 486, 489
4460471 .... 215, 346, 486, 489
4460473 ..... 487, 489
4460476 ..... 504, 505
4460488 .... 114, 165, 215, 346
4460508 ..... 486, 487, 489
4460509 ..... 487, 489
4460510 ..... 505, 546
4460526 ..... 215, 489
4460536 .... 164, 186, 491, 496
4460539 ..... 493, 494
4460579 492
4460580 492
4460582 492
4460598 ..... 339, 347
4460607 .... 255, 260, 266, 271, 275, 282, 287
4460608 494
4460633 499
4460634 490
4460635 490
4460693 494
4460701 ..... 500, 501
4460705 502
4460708 ..... 346, 486, 495
4460709 500
4460710 500
4460713 493
4460725 493
4460726 493
4460728 493
4460742 ..... 275, 493, 504
4460743 ..... 275, 504
4460761 .... 329, 486, 490, 491
4460789 ..... 504, 505
4460790 ..... 504, 505
4460799 493
4460800 493
4460836 329
4460850 ..... 496, 504, 505
4460865 ..... 487, 489
4460866 .... 486, 487, 488, 490
4460867 496
4460871 .... 351, 353, 359, 361, 486, 490, 491, 494, 497, 504
4460873 ..... 486, 490
4460874 ..... 215, 486, 489
4460875 ..... 215, 486, 489
4460876 490
4460878 490
4460879 486
4460880 .... 486, 491, 492
4460887 ..... 486, 490
4460889 493
4460890 493
4460891 ..... 493, 494
4460892 495
4460894 495
4460897 .... 164, 186, 496
4460905 ... 216, 346, 486, 489, 490
4460906 ..... 245, 502
4460933 329
4460943 491
4460944 ..... 492, 493
4460956 ... 255, 260, 266, 271, 275, 282, 287, 499
4460957 ... 255, 260, 266, 271, 276, 282, 287, 499
4460958 ... 254, 258, 264, 270, 274, 280, 286, 503
4460959 ..... 488, 489
4460960 ..... 488, 489
4460961 502
4460962 371
4460963 ... 255, 259, 265, 271, 275, 281, 503
4460967 ... 255, 259, 265, 271, 275, 281, 287, 504
4460968 ... 293, 294, 299, 497, 499
4460971 ..... 375, 377
4460979 493
4460993 494
4460994 494
4460995 ..... 493, 494
4460996 493
4461001 ... 255, 260, 266, 271, 276, 282, 287
4461005 493
4461006 493
4461008 493
4461052 493
4461053 493
4461054 493
4461060 493
4461070 492
4461071 495
4461072 495
4461073 495
4461074 495
4461095 492
4461109 494
4461111 494
4461113 494
4461121 493
4461122 493
4461123 493
4461124 494
4461157 493
4461161 494
4461196 499
4461197 ..... 500, 501
4461198 498
4461199 499
4461200 ..... 500, 501
4461201 498
4461202 499

PART NUMBER INDEX

4461203.....500, 501
4461204.....498
4461205.....499
4461206.....500, 501
4461207.....498
4461222.....494
4461244.....498
4461245.....498
4461246.....498
4461249.....499
4461250.....500, 501
4520212.....32
4520216.....32
4520217.....32
4520224.....79
4520240.....32
4530022.....369, 371, 373
4530024.....375, 379
4530025.....375, 379
4530028.....369, 371, 373
4558765.....111
4564281.....139
4564417.....238
4566027.....417
4566605.....135, 147
4567073.....140
4567177.....401
4567462.....14, 17, 23
4567495.....121, 130, 171, 178
4567627.....207
4567878.....138, 147
4567908.....401
4567949.....403
4568033.....75
4568068.....389, 405
4568114.....145, 156
4568158.....136
4568218.....417
4568280.....472
4568281.....472
4568734.....242, 270
4568735.....242, 245, 270, 274
4568743.....111, 163, 185
4568951.....147
4568955.....147
4569083.....147
4569173.....147
4569176.....111, 163, 186
4569342.....159
4569345.....159
4640113.....32, 79
4640261.....75
4640509.....397, 403
4640751.....122, 130, 171, 178
4640858.....385, 387, 419, 421
4640871.....14, 17, 23
4640932.....389, 391, 393, 395
4640936.....401, 427
4640952.....159
4640989.....135, 147
4641061.....113, 122, 126, 138, 145
4641086.....389, 391, 393, 395
4641108.....113, 122, 126, 138, 145, 156, 169, 176
4641155.....71, 73
4641162.....385, 419
4641175.....321, 325
4641176.....83, 85
4641177.....321, 325
4641198.....451, 463
4641199.....115, 166, 179, 186, 201, 471
4641200.....417
4641206.....71
4641207.....71, 72
4641208.....72
4641260.....429
4641265.....14, 17, 23
4641272.....111, 163, 185
4641281.....455, 459, 468
4641317.....113, 127, 156, 165, 176, 187
4641390.....387, 421
4641509.....71
4641510.....72
464509.....399
4711400.....14, 17, 23, 71, 73, 79, 83, 112, 127, 130, 137, 147, 157, 159, 163, 177, 185, 220, 242, 245, 254, 258, 264, 270, 274, 280, 286, 306, 315, 329, 334, 338, 339
4711500.....75, 111, 139, 140, 157, 163, 185, 254, 258, 264, 270, 274, 280, 286, 291, 292, 297, 298, 314, 321, 325, 346
4711600.....83, 111, 145, 159, 163, 185, 254, 258, 265, 270, 274, 280, 286, 292, 298, 314, 315, 321, 325, 329
4711700.....242, 246, 270
4711800.....254, 258, 265, 270, 274, 280, 286
4712000.....365, 367
4712600.....19
4713000.....15, 19
4740036.....75
4740086.....15, 19, 26
4740155.....19
4740158.....13, 14, 17, 18, 21, 23
4740274.....111, 120, 130, 136, 147, 159, 163, 171, 178, 185
4740362.....219, 223, 334, 338
4740397.....234, 238, 242, 246, 347
4740411.....333
4740444.....215
4740491.....19
4740500.....224
4740537.....24
4740538.....24
4740539.....24
4740540.....24
4750600.....254, 259, 265, 271, 275, 281, 287
4750800.....139, 152, 223
4751000.....75, 111, 135, 163, 185, 219, 224, 225, 228, 234, 238, 242, 246, 250, 258, 265, 270, 274, 280, 286, 333, 337, 346, 369, 371, 377
4751400.....83, 111, 113, 120, 127, 130, 136, 137, 145, 147, 157, 159, 163, 165, 169, 171, 177, 178, 185, 187, 207, 215, 223, 264, 292, 294, 298, 299, 301, 306, 310, 314, 329, 334, 338, 343, 346, 369, 371, 375, 377, 509, 513, 518, 524, 528, 532, 535
4751500.....71, 73, 111, 122, 130, 135, 138, 147, 159, 163, 170, 177, 185, 187, 223, 228, 234, 238, 246, 250, 291, 297, 302, 306, 310, 329, 343
4751600.....13, 18, 21, 29, 31, 35, 72, 73, 88, 111, 113, 115, 120, 127, 130, 136, 145, 147, 152, 157, 159, 163, 165, 166, 169, 171, 177, 178, 185, 187, 207, 223, 225, 228, 233, 238, 242, 270, 291, 297, 306, 321, 338, 369, 371, 375
4751700.....250
4751800.....14, 15, 17, 19, 23, 26, 111, 122, 130, 138, 147, 159, 163, 185, 219, 242, 270, 291, 297, 321, 339, 341, 343
4751900.....122, 171, 178
4752000.....23, 113, 121, 127, 137, 145, 157, 165, 169, 177, 187
4752200.....113, 121, 127, 137, 145, 157, 164, 169, 177, 187
4760600.....254, 259, 265, 271, 275, 281, 287
4761000.....333, 337, 347
4761400.....215
4761500.....136, 254, 258, 265, 270, 274, 280, 286
4761600.....75, 207
4761800.....314
4791400.....83, 122, 130, 137, 147, 159, 164, 186, 254, 258, 265, 270, 280, 286
4791600.....138
4811700.....377
4811900.....246, 274
4812000.....147, 238
4812200.....130, 179
4831900.....123, 131, 137, 147, 159, 164, 173, 179, 186
4832000.....123, 131, 138, 147, 173
4845194.....224
4845288.....333
4845327.....333
4845395.....121, 130, 171, 179
4845426.....333
4845613.....120, 136
4845665.....224
4845711.....26
4845767.....314
4845927.....306
4845951.....333
4846011.....137
4846033.....314
4846037.....224
4846046.....137
4846114.....79
4846126.....79
4846158.....321
4846162.....19
4846168.....75
4846169.....75
4846218.....321, 325
4846259.....151
4846278.....306
4846298.....321
4846335.....291
4846336.....291
4846343.....291
4846346.....291
4846352.....13, 14
4846353.....21, 23
4846356.....306
4846366.....291
4846370.....343
4846375.....207
4846418.....79
4846419.....79
4846424.....224
4846426.....17, 18
4846428.....291, 298
4846452.....337
4846478.....120
4846561.....339
4846567.....120, 130, 171, 179
4846571.....375
4846573.....325, 329
4846627.....369, 371
4846665.....207
4846683.....171, 179
4846688.....310
4846689.....310

4846693 310
4846697 298
4846698 219
4846700 298
4846701 298
4846703 298
4846725 23
4846733 26
4846734 315
4846806 147
4846820 ..... 111, 163
4846821 .... 111, 163, 185
4846905 298
4860178 32
4860179 32
4860193 32
4860218 79
4891500 ..... 97, 101, 103, 105, 242
4891600 ... 112, 115, 121, 128, 136, 145, 158, 164, 166, 171, 179, 186, 242, 246, 270, 274, 315, 325, 329
4891800 ... 14, 18, 24, 29, 31, 79, 88, 315, 325, 329
4892000 . 29, 31, 88, 242, 329
4892200 .... 14, 18, 23, 24
4892600 ..... 325, 329
4920385 ..... 140, 159
4921829 500
4921954 501
4922482 502
4922484 504
4922521 .... 216, 491, 492
4922522 .... 216, 491, 492
4922523 ..... 216, 491
4922530 ... 292, 298, 487, 489
4922531 301
4922532 .... 306, 310, 489
4922533 ..... 346, 486
4922637 495
4922638 .... 215, 216, 490
4922641 ... 255, 259, 266, 271, 275, 281, 287, 502, 504
4922642 131
4922643 504
4922666 ... 215, 346, 486, 490
4922669 ..... 346, 486
4922705 329
4922714 ... 293, 294, 299, 497
4922737 ... 112, 163, 185, 495
4922757 ... 255, 259, 265, 281, 287, 503
4922764 504
4922770 ... 292, 293, 298, 306, 489, 496
4922857 ... 293, 298, 302, 306, 310, 487, 489
4922858 489
4922869 329
4922881 .... 216, 491, 492
4922925 ... 254, 258, 265, 270, 274, 280, 286, 503
4922929 ... 292, 298, 306, 310, 487, 489
4922970 502
4922978 .... 127, 170, 495
4923199 ..... 271, 504
4923223 .... 215, 216, 490
4923231 ..... 216, 490
4923251 .... 216, 491, 492
4923252 .... 216, 491, 492
4923265 .... 216, 491, 492
4923357 .... 216, 491, 492
4923395 .... 216, 491, 492
4923420 ..... 275, 504
4923445 502
4923451 .... 130, 179, 497
4923455 ..... 215, 490
4923458 ..... 292, 487
4923459 306
4923460 ..... 292, 488
4923461 ..... 302, 488
4923462 487
4923466 497
4923467 ..... 294, 497
4923469 .... 292, 306, 496
4923481 306
4923575 .... 215, 216, 490
4923581 .... 216, 491, 492
4923615 .... 292, 302, 487
4923616 ..... 306, 487
4933170 .... 483, 492, 494
4933171 .... 483, 492, 494
4933215 ..... 482, 501
4933216 ..... 482, 502
4933217 482
4933218 483
4933219 482
4933231 482
4933238 ..... 482, 501
4933239 ..... 482, 502
4933250 ..... 482, 501
4933264 ... 255, 259, 265, 281, 287, 503
4933280 .... 483, 491, 494
4933300 .... 482, 501, 502
4933308 504
4933316 ..... 271, 503
4933326 .... 483, 492, 494
4933332 .... 483, 491, 494
4933333 .... 483, 492, 494
4933347 .... 483, 492, 494
4933349 ..... 275, 503
4933350 ..... 482, 502
4933352 .... 483, 491, 494
4933381 .... 483, 492, 494
4933382 ... 483, 491, 492, 494
4933384 .... 483, 492, 494
5240600 ..... 164, 186
5240800 ..... 164, 186
70000042 98
70000088 95
70000089 95
70000122 ..... 232, 249
70000123 .. 227, 232, 237, 241, 249
70000124 .. 228, 233, 237, 241, 249
70000125 .. 228, 233, 237, 241, 249
70000126 .. 228, 233, 237, 241, 249
70000127 .. 228, 232, 241, 249
70000264 123
70000342 318
70000345 496
70000544 115
70000619 .. 253, 257, 263, 269, 273, 279, 285
70000681 ..... 98, 105, 107
70000779 435
70000781 ..... 71, 73
70000797 ..... 59, 67
70000863 .. 253, 257, 263, 269, 273, 279, 285
70000865 ... 101, 103, 107
70000868 101
70000916 ... 131, 172, 179
70000934 83
70000969 203
70000970 203
70000971 203
70000972 203
70000973 203
70000975 204
70000976 203
70000977 204
70000978 ..... 203, 204
70001002 ..... 131, 172
70001017 .. 111, 140, 163, 184
70001086 423
70001100 .. 253, 257, 263, 269, 273, 279, 285
70001103 208
70001180 115
70001181 ..... 132, 180
70001257 116
70001349 ..... 41, 49
70001384 .. 253, 257, 263, 269, 273, 279, 285
70001386 ..... 166, 187
70001387 ..... 166, 187
70001388 ..... 166, 187
70001389 ..... 166, 187
70001390 ..... 166, 187
70001391 ..... 166, 187
70001392 ..... 166, 187
70001393 ..... 166, 187
70001394 ..... 166, 187
70001395 ..... 166, 187
70001396 ..... 166, 187
70001397 ..... 166, 187
70001398 ..... 166, 187
70001399 ..... 166, 187
70001400 ..... 166, 187
70001401 ..... 166, 187
70001402 ..... 166, 187
70001403 .. 115, 166, 187, 540
70001404 ..... 166, 187
70001405 ..... 166, 187
70001406 ..... 166, 187
70001407 ..... 166, 187
70001408 ..... 166, 188
70001409 .. 166, 188, 540
70001410 ..... 166, 188
70001411 ..... 167, 188
70001412 ..... 167, 188
70001413 ..... 167, 188
70001414 ..... 167, 188
70001415 ..... 167, 188
70001416 ..... 167, 188
70001417 ..... 167, 188
70001418 ..... 167, 188
70001419 ..... 167, 188
70001423 .. 131, 172, 179
70001424 381
70001425 381
70001427 381
70001428 381
70001429 381
70001430 381
70001431 381
70001432 381
70001435 ..... 131, 179
70001695 115
70001696 . 253, 258, 264, 270, 273, 280, 285
70001697 318
70001792 ..... 167, 188
70001793 ..... 167, 188
70001794 ..... 167, 188
70001796 ..... 167, 188
70001931 496
70001950 496
70001951 496
70001953 . 253, 257, 263, 269, 273, 279, 285
70001963 435
70001966 . 253, 257, 263, 269, 273, 279, 285
70001973 . 253, 258, 264, 270, 273, 280, 286
70001974 . 253, 258, 264, 270, 273, 280, 285
70001990 ..... 115, 540
70001996 ..... 313, 314
70001998 ..... 313, 314
7000206 ..... 41, 49
70002088 . 253, 257, 263, 269, 273, 279, 285
70002098 ..... 167, 188
70002099 ..... 167, 188
70002100 ..... 167, 188
70002101 ..... 167, 188
70002102 ..... 167, 188
70002103 ..... 167, 188
70002104 ..... 167, 188
70002105 ..... 167, 188
70002106 ..... 167, 188
70002107 ..... 167, 188
70002108 ..... 167, 188
70002109 ..... 167, 188
70002206 95
70002207 95

PART NUMBER INDEX

70002216..391, 395, 407, 411, 419, 423, 431
70002217..391, 395, 407, 411, 423, 431
70002219...419, 427, 433
70002220...399, 425, 435
70002221.....429
70002222.....429
70002223.....399, 425
70002224.....427
70002225.....427
70002234...122, 131, 172
70002235...228, 232, 237
70002239.....232
70002240.....232
70002257.....197
7000229.....41, 49
70002297..253, 257, 263, 269, 273, 279, 285
7000230.....41, 49
70002307.....139, 148
7000232.....41, 49
70002390.....71
70002437.....167, 188
7000246.....41, 49
70002460..253, 258, 264, 270, 273, 279, 285
7000248.....41, 49
7000253.....41, 49
70002567.....140
7000257.....41, 49
7000258.....41, 49
7000261.....41, 49
7000262.....41, 49
70002627.....496
7000263.....41, 49
70002647.....107
70002648.....107
70002649.....107
70002651.....107
70002705...111, 163, 185
70002706...111, 163, 185
70002724.....361
70002725.....361
70002726.....361
70002727.....361
70002728.....361
70002729.....361
70002730.....353
70002731.....353
70002732.....353
70002733.....353
70002734.....353
70002735.....353
70002768.....208
70002818..255, 260, 266, 275, 281
70002819..255, 260, 266, 275, 282
70002820..255, 260, 266, 275, 282
70002821..255, 260, 266, 275, 282
70002822..255, 260, 266, 275, 282
70002823..255, 260, 266, 275, 282
70002824 . 255, 260, 266, 276, 282
70002825 . 255, 260, 266, 276, 282
70002826 . 255, 260, 266, 276, 282
70002906 353
70002962 73
70003033 167
70003034 167
70003138 107
70003479 132
70003480 132
70003481 132
70003483 338
70003631 . 253, 257, 263, 269, 273, 279, 285
70003649 85
70003708 . 253, 257, 263, 269, 273, 279, 285
70003709 . 253, 257, 263, 269, 273, 279, 285
70003784 346
70003791 115
70003809 ..... 391, 407
70003810 ..... 391, 407
70003812 391
70003813 391
70003814 ..... 391, 407
70003819 ..... 395, 411
70003830 407
70003831 407
70003832 407
70003833 399
70003834 399
70003835 399
70003836 399
70003843 411
70003844 411
70003845 ..... 395, 411
70003846 395
70003847 395
70003932 . 123, 132, 172, 180
70004158 105
70004159 103
70004169 . 253, 257, 258, 263, 264, 269, 270, 273, 274, 279, 280, 285
70004171 . 253, 257, 263, 269, 273, 279, 285
70004254 107
70004257 107
70004258 107
70004259 107
70004260 107
70004261 107
70004262 107
70004738 363
70004739 363
70004740 363
70004741 363
70004742 363
70004743 363
70004744 363
70004745 363
70004746 363
70004747 363
70004748 363
70004749 363
70004750 363
70004751 363
70004752 355
70004753 355
70004754 355
70004755 355
70004756 355
70004757 355
70004758 355
70004759 355
70004760 355
70004761 355
70004762 355
70004763 355
70004764 355
70004765 355
70004766 355
70004767 355
70004768 355
70004769 355
70004770 355
70004771 355
70004772 355
70004773 355
70004774 356
70004775 356
70005230 363
70005483 42
70005580 423
70005704 188
70005705 188
7000625 ..... 334, 338
70006267 315
70006269 313
70006275 315
70006280 313
70006428 ..... 42, 50
70006429 ..... 42, 50
7000663 ... 122, 131, 172, 180
70006739 107
70006740 107
70006741 107
70006742 107
7000731 42
7000897 139
7000974 203
7001481 197
7001485 196
7001498 193
7001913 ..... 37, 45
7001998 ..... 41, 49
7002821 ..... 505, 545
7002822 546
7002823 ..... 505, 545
7002826 546
7002828 505
7002840 .. 14, 17, 23, 546
7003657 .... 227, 232, 237
7003928 ..... 351, 353
7003933 359
7003935 359
7003941 ..... 359, 361
7003946 359
7003953.....351
7003969.....359
7003972.....359, 361
7003973.....359, 361
7003976.....351
7003977.....351
7003980.....359, 361
7003982.....361
7003983.....359, 361
7003986.....359
7003989.....359, 361
7003992.....351, 359
7003993.....351, 359
7003994.....359
7004035.....95
7004036.....95
7004043.....95
7004044.....95
7004045.....95
7004047.....95
7004049.....95
7004275.....546
7004276.....546
7004906.....53
7004907.....53
7004908.....53
7004910.....53
7004917.....53
7005843.....92
7005881.....91, 92
7005882.....91, 92
7005887.....92
7005889.....91
7005891.....91
7006139.....313
7006151.....313
7006152.....313
7006156.....313
7007006.....37, 45
7007208.....192
7007289.....198
7007412.....193, 197
7007413.....191
7007414.....191
7007416.....192
7007417.....192
7007419.....63, 192, 196
7007423.....192
7007425.....192
7007435.....192
7007437....55, 60, 64, 68, 192
7007438....55, 59, 63, 67, 192
7007439....55, 59, 63, 67, 192
7007441.....192
7007442.....192
7007444.....192
7007446....55, 59, 63, 67, 192
7007452.....192
7007454.....192
7007457.....192
7007463.....192
7007464.....192
7007465.....192

7007466 192
7007470 ... 192, 196, 197, 198
7007472 193
7007475 193
7007476 193
7007478 193
7007484 193
7007485 193
7007487 193
7007488 193
7007494 192
7007496 193
7007497 ..... 193, 496
7007498 ..... 193, 496
7007601 ..... 41, 49
7007640 ..... 41, 49
7007874 53
7007875 53
7007876 53
7007878 53
7007879 53
7007880 53
7010116 192
7010429 ..... 41, 49
7010542 . 71, 72, 85, 321, 325
7010543 . 71, 72, 85, 113, 122, 127, 138, 145, 157, 165, 169, 176, 177, 187, 321, 325
7011016 203
7011044 203
7011067 203
7011112 ... 389, 391, 393, 395
7011347 ..... 417, 435
7011358 423
7011377 423
7011378 423
7012513 ... 227, 232, 237, 241, 245, 249
7012514 ... 227, 232, 237, 241, 245, 249
7012518 ..... 85, 113, 122, 127, 138, 145, 157, 169, 177
7012519 79
7012520 79
7012521 79
7012522 79
7012523 79
7012540 85
7012558 ... 227, 232, 237, 241, 245, 249
7012596 97
7012597 97
7012654 97
7012655 97
7012664 ... 110, 121, 129, 137, 146, 158, 162, 170, 177, 184, 538
7012679 147
7012693 ..... 14, 17, 23
7012903 85
7012914 ..... 321, 325
7012918 ..... 321, 325
7012941 ... 113, 122, 127, 138, 145, 157, 165, 169, 176, 177, 187
7012943 ..... 85, 113, 122, 127, 138, 139, 145, 157, 169, 177, 538
7012944 ..... 85, 113, 122, 127, 138, 145, 157, 165, 169, 176, 177, 187, 321, 322, 325, 326, 538
7012953 ..... 85, 321, 325
7012967 ..... 85, 321, 322, 325
7012974 ... 113, 122, 127, 138, 145, 156, 169, 176
7012975 85
7012989 ..... 321, 325
7012995 ... 113, 122, 127, 138, 145, 157, 169, 176
7012998 85
7013701 203
7013711 203
7013757 203
7013766 203
7013771 203
7014801 208
7014802 208
7014811 208
7014812 207
7014816 208
7016180 ..... 121, 136
7016314 208
7016319 219
7016331 ... 122, 131, 172, 179, 540
7016360 80
7016372 219
7016399 ..... 334, 338
7016422 91
7016423 91
7016424 91
7016428 91
7016429 91
7016430 91
7016431 92
7016432 91
7016433 91
7016434 92
7016435 92
7016628 219
7016654 546
7016655 546
7016676 97
7016744 203
7016745 203
7016746 203
7016768 203
7016769 203
7016817 ... 110, 121, 128, 162, 171, 178, 184, 495
7016820 ... 111, 121, 128, 162, 171, 178, 184, 495
7016834 ... 111, 121, 128, 162, 171, 178, 184, 495
7016838 ... 111, 121, 162, 171, 184, 495
7016839 .... 138, 144, 157, 495
7016840 .... 138, 144, 157, 495
7016841 .... 138, 144, 157, 495
7016842 ..... 138, 144, 495
7017059 ..... 41, 49
7017067 ..... 41, 49
7017070 ..... 41, 49
7017080 ..... 41, 49
7017082 ..... 38, 46
7017092 ..... 37, 45
7017093 ..... 37, 45
7017094 ..... 38, 41, 45, 49
7017095 ..... 37, 45
7017097 ..... 38, 45
7017136 317
7017137 318
7017138 318
7017139 317
7017140 317
7017142 318
7017143 317
7017148 317
7017158 318
7017159 318
7017162 317
7017163 317
7017164 317
7017172 317
7017192 317
7017195 317
7017402 ..... 85, 321, 322, 325, 326
7017410 85
7017421 85
7017422 85
7017428 85
7017433 85
7017440 85
7017441 85
7017451 ..... 85, 538
7017452 .... 321, 322, 325, 326
7017454 85
7017479 .... 113, 122, 127, 138, 145
7017482 85
7017496 . 71, 73, 387, 421
7019103 359
7019110 359
7019111 ..... 351, 359
7019112 359
7019114 359
7019115 359
7019122 351
7019123 351
7019141 351
7019142 351
7019143 351
7019144 351
7019145 351
7019147 351
7019149 351
7019150 351
7019151 359
7019154 359
7019155 359
7019160 359
7019161 359
7019162 ..... 359, 361
7019164 ..... 359, 361
7019165 ..... 359, 361
7019166 359
7019167 ..... 359, 361
7019168 359
7019171 351
7019174 351
7019177 351
7019194 ..... 359, 361
7019196 359
7019197 351
7019656 .... 111, 163, 185
7019680 ... 227, 232, 241, 245, 249
7019925 ..... 140, 148
7019930 140
7019932 140
7019933 140
7019976 ..... 140, 147
7019977 ..... 139, 147
7019978 148
7019986 139
7019993 ..... 139, 148
7019994 ..... 139, 148
7019996 ..... 139, 147
7020020 83
7020023 ... 123, 131, 172, 179, 540
7020026 ... 123, 131, 172, 179
7020027 123
7020033 ..... 15, 19
7020034 ..... 15, 19
7020035 ..... 15, 19
7020036 ..... 15, 19
7020037 ..... 15, 19
7020038 ..... 15, 19
7020039 ..... 15, 19
7020040 ..... 15, 19
7020041 ..... 15, 19
7020042 ..... 15, 19
7020054 ..... 15, 19
7020055 ..... 15, 19
7020056 207
7020108 ... 227, 232, 237, 241, 245, 249
7020109 ... 227, 232, 237, 241, 245, 249
7020110 ... 227, 232, 237, 241, 245, 249
7020111 ... 227, 232, 237, 241, 245, 249
7020168 ..... 123, 172
7020175 ..... 215, 346
7020176 ..... 215, 346
7020190 ... 227, 232, 237, 241, 245, 249
7020191 .... 228, 233, 237
7020192 ... 228, 233, 237, 242, 249
7020193 ... 227, 232, 237, 241, 245, 249, 502

PART NUMBER INDEX

7020226.....208
7020246.....213
7020279.....80
7020280.....80
7020281.....80
7020282.....80
7020283.....80
7020284.....80
7020285.....80
7020286.....80
7020403.....131, 172
7020408....123, 131, 172, 179
7020411....123, 131, 172, 179
7020447.....131, 172, 179
7020449....123, 131, 172, 179
7020458.....123, 132, 172
7020459.....132, 173, 180
7020460.....132, 173, 180
7020461.....122, 132, 172
7020463.....123, 172
7020464....122, 131, 172, 180
7020465....123, 131, 172, 179
7020467.....123, 172
7020468....123, 131, 172, 179
7020471.....131, 172, 179
7020477.....123
7020479....122, 131, 172, 180
7020480.....123, 172
7020482.....123, 172
7020488.....123, 172
7020495.....131, 172, 179
7021202.....192
7021203.....192
7021206.....193
7021207.....192
7021209.....193
7021212.....192
7021214.....192
7021218.....192
7021219.....192
7021220.....192
7021221.....193
7021222.....193
7021223.....193
7021226.....193
7021237.....196
7021238.....196
7021239.....196
7021240.....196
7021242.....196
7021243.....196
7021248.....196
7021249....55, 59, 63, 67, 196
7021250.....196
7021251.....196
7021254.....196
7021255.....196, 197
7021256.....198
7021257.....196
7021258..... 196
7021259..... 196
7021260..... 196
7021263..... 193, 197
7021264..... 192, 197
7021265..... 197
7021268..... 197
7021269..... 197
7021270..... 197
7021271..... 197
7021272..... 197
7021273..... 197
7021274..... 197
7021275... 55, 59, 63, 67, 197
7021276... 55, 59, 63, 67, 197
7021277... 55, 59, 63, 67, 197
7021278..... 197
7021279..... 197
7021280.... 196, 197, 198
7021281..... 197
7021283..... 196
7021284..... 196
7021288..... 197
7021290..... 197
7021291..... 197
7021292..... 197
7021294..... 197
7021296..... 198
7021297..... 198
7021298..... 193, 198
7021299..... 198
7021611..... 85
7021625..... 71, 72
7021639..... 71, 73
7021655..... 72, 73
7021868..... 139
7021869..... 147
7022134.... 139, 148, 497
7022139..... 139, 147
7022142..... 148
7022143..... 139, 148
7022144..... 140
7022149..... 140
7022150..... 140, 147
7022151..... 140
7022153..... 140, 148
7022154..... 140
7022155..... 140, 148
7022156..... 140, 148
7022157..... 140
7022158..... 139
7022159..... 139
7022160..... 139
7022161..... 139
7022162..... 139
7022165..... 151
7022166..... 151
7022167..... 151
7022168..... 151
7022170..... 151
7022171..... 151
7022178..... 140, 148
7022179..... 140
7022180..... 140, 148
7022302.... 55, 59, 63, 67
7022305.... 55, 59, 63, 67
7022310.... 55, 59, 63, 67
7022311.... 55, 59, 63, 67
7022312.... 55, 59, 63, 67
7022314.... 55, 59, 63, 67
7022318..... 55, 63, 192
7022321..... 55, 63
7022323..... 63, 68
7022326.... 55, 60, 64, 68
7022328... 55, 56, 59, 60, 63, 64, 67, 68
7022329..... 63, 67
7022341..... 196
7022342..... 196
7022346..... 197
7022347..... 197
7022367..... 63
7022368.... 55, 59, 63, 67
7022370..... 55, 63
7022371.... 56, 60, 64, 68
7022372..... 63, 67
7022373..... 196
7022374..... 196
7022375..... 196
7022376..... 196
7022377..... 196
7022378..... 196
7022379..... 196
7022380..... 196
7022381..... 196
7022382..... 197
7022383..... 197
7022384..... 197
7022385..... 197
7022386..... 197
7022387..... 197
7022397..... 71, 72, 73
7022399..... 71, 72, 73
7022808..... 351, 353
7022812..... 359
7022814..... 351
7022815..... 351, 353
7022816..... 351
7022817..... 351
7022818..... 351
7022819.... 351, 353, 497
7022822..... 359
7022823..... 359
7022824..... 359, 497
7022825..... 497
7023205..... 208, 538
7023206..... 83
7023207..... 83
7023318..... 95
7023484..... 97
7023603..... 151
7023613..... 139
7023637..... 139, 148
7023652..... 139
7023653..... 139
7023654..... 139
7023655..... 139
7023656..... 139
7023657..... 140
7023658..... 139
7023659..... 151
7023660.....151
7023662.....139
7023663.....139, 496
7023665.....151
7023679.....496
7023680.....148, 151
7023681.....139, 147
7023682.....147
7023683.....139, 147
7023698.....148
7023699.....148
7023907....55, 56, 59, 63, 67
7023908.....55, 59, 63, 67
7023910.....55, 59, 63, 67
7023911.....321, 325
7023912.....322, 325
7023913.....85
7023914.....85
7023915.....321, 325
7023917.....71, 72
7023922.....85
7023929....115, 120, 135, 171, 178, 201
7023933.....71
7023934.....72
7023935.....72
7023936.....72
7023970.....85
7023978.....192
7023979.....192
7023980.....193
7023984.....321, 325
7024105.....37, 45
7024106.....37
7024107.....37, 45
7024108.....38, 45
7024109.....37, 45
7024110.....37, 45
7024111.....37, 45
7024112.....37, 45
7024113.....37, 45
7024114.....38, 46
7024115.....38, 45
7024116.....37, 45
7024117.....37, 45
7024118.....37, 45
7024119.....37, 45
7024120.....37, 45
7024121.....37, 45
7024122.....37, 45
7024123.....37, 45
7024124.....37, 45
7024125.....37, 45
7024126.....37, 45
7024127.....37, 45
7024128.....37, 45
7024129.....37, 45
7024130.....37, 45
7024131.....38, 45
7024132.....37, 45
7024133.....38, 45
7024134.....37, 45
7024182.....42
7024189.....42
7024190.....42
7024191.....42

7024192 42
7024193 42
7024194 42
7024196 42
7024197 42
7024198 ..... 38, 46
7024318 ..... 123, 172
7024379 95
7024380 95
7024381 95
7024389 95
7024390 95
7024439 208
7024440 208
7024441 208
7024442 208
7024443 208
7024444 ..... 208, 538
7024445 208
7024446 208
7024452 339
7024453 95
7024462 373
7024463 373
7024464 373
7024465 373
7024466 373
7024467 373
7024468 373
7024469 373
7024470 373
7024471 ..... 373, 381
7024472 373
7024473 373
7024474 373
7024475 373
7024476 373
7024477 373
7024478 373
7024479 373
7024485 ... 253, 258, 264, 270, 273, 279, 285
7024488 ... 253, 257, 263, 269, 273, 279, 285
7024489 ... 253, 257, 263, 269, 273, 279, 285
7024519 379
7024520 379
7024521 379
7024522 379
7024523 379
7024524 379
7024525 379
7024526 379
7024527 379
7024528 379
7024529 379
7024530 ..... 379, 381
7024531 ..... 379, 381
7024532 ..... 379, 381
7024533 ..... 379, 381
7024534 ..... 379, 381
7024535 ..... 379, 381
7024536 ..... 379, 381
7024537 ..... 379, 381
7024538 379
7024539 379
7024540 379
7024541 379
7024565 ... 123, 132, 172, 180
7024579 ... 123, 132, 173, 180
7024705 42
7024709 37
7024710 37
7024711 37
7024712 ..... 41, 49
7024713 ..... 41, 49
7024714 ..... 41, 49
7024715 ..... 41, 49
7024716 ..... 41, 49
7024717 42
7024718 42
7024719 37
7024800 197
7024804 197
7024830 496
7024844 .... 391, 395, 399
7024852 55
7024853 ..... 55, 59
7024854 ..... 55, 60, 68
7024855 196
7024856 196
7024857 196
7024858 196
7024868 .... 55, 59, 63, 67
7024881 ..... 71, 73
7025124 140
7025134 ..... 140, 148
7026041 107
7026042 ..... 97, 101, 103, 105, 107
7026043 ..... 97, 101, 103, 105, 107
7026044 ..... 97, 105, 107
7026045 ..... 97, 105, 107
7026046 ..... 97, 105, 107
7026047 ..... 97, 105, 107
7026048 ..... 97, 105, 107
7026049 ..... 97, 105, 107
7026050 ..... 97, 105, 107
7026051 ..... 97, 105, 107
7026052 ..... 97, 105, 107
7026053 ..... 97, 105, 107
7026054 98
7026055 ..... 98, 105, 107
7026056 98
7026057 ..... 98, 105, 107
7026058 98
7026059 ..... 97, 98, 105
7026060 ..... 97, 98, 105
7026064 435
7026065 435
7026066 435
7026067 435
7026068 399
7026069 435
7026072 435
7026073 429
7026074 429
7026075 429
7026076 429
7026078 429
7026079 429
7026080 429
7026081 ..... 423, 431
7026082 .... 395, 411, 423, 431
7026084 .... 391, 395, 407, 411
7026085 431
7026086 431
7026087 ..... 423, 431
7026088 ..... 399, 425
7026089 425
7026090 ..... 399, 425
7026091 ..... 399, 425
7026092 ..... 399, 425
7026093 425
7026094 425
7026095 425
7026096 425
7026097 427
7026098 427
7026099 427
7026100 433
7026101 427
7026102 427
7026104 ..... 419, 433
7026105 433
7026106 433
7026107 433
7026108 435
7026109 435
7026110 419
7026111 419
7026114 419
7026115 419
7026116 419
7026117 423
7026118 423
7026119 315
7026120 315
7026188 .... 253, 258, 264, 270, 273, 280, 285
7026199 .... 227, 232, 237, 241, 245, 249
7026597 .... 253, 258, 264, 270, 273, 280, 285
7026608 ..... 131, 172, 180
7026626 .... 253, 258, 264, 270, 273, 280, 285, 503
7026835 116
7026836 116
7026840 116
7026843 ..... 116, 163, 186
7026846 115
7026847 ..... 115, 164, 186
7026848 115
7026849 115
7026850 115
7026851 116
7026852 115
7026853 115
7026854 116
7026856 115
7026857 115
7026858 115
7026859 116
7026860 115
7026861 116
7026862 116
7026863 115
7026864 115
7026865 115
7026866 115
7026867 115
7026868 115
7026869 115
7026870 115
7026871 540
7026872 115
7026873 115
7026874 115
7026875 115
7026878 115
7026879 116
7026880 116
7026881 .... 116, 164, 186
7026882 116
7026883 116
7026884 116
7026885 .... 116, 164, 186
7026886 .... 116, 164, 186
7027014 ..... 157, 495
7027041 ... 110, 121, 128, 162, 171, 178, 184, 495
7027236 ... 122, 131, 172, 179
7027239 .... 132, 173, 180
7027241 ..... 131, 172
7027242 172
7027245 .... 132, 173, 180
7027246 .... 131, 172, 179
7027276 ... 123, 132, 172, 180
7027350 .... 101, 103, 107
7027351 .... 101, 103, 107
7027352 .... 101, 103, 107
7027353 ..... 101, 103
7027354 ..... 98, 101, 103, 105, 107
7027356 ..... 98, 101, 103, 105, 107
7027358 ..... 97, 101, 103, 105
7027359 ..... 101, 103
7027360 .... 101, 103, 107
7027361 ..... 101, 103
7027363 ..... 101, 103
7027400 147
7027402 .... 139, 140, 148
7027403 496
7027404 147
7027405 148
7027410 148
7027411 ..... 140, 148
7027413 148
7027419 ..... 55, 59
7027608 .... 131, 172, 179
7027609 .... 131, 172, 179
7027610 .... 131, 172, 179
7027730 97
7027769 .... 132, 173, 180
7027773 373
7027774 373
7027775 373

PART NUMBER INDEX

7027776.....373
7027777.....373
7027778.....373
7027779.....373
7027780.....373
7027790.....132, 180
7027791.....131, 180
7027792.....132, 180
7027793.....496
7027794..... 496
7027795.... 132, 180, 540
7027796..... 496
7027799... 253, 257, 264, 269, 273, 279, 285
7027887... 228, 233, 238, 242, 245, 250
7027965..... 158, 540
7027972..... 158, 540
7027989 496
7027991 496
7027994 ..... 158, 540
7027996 158
8008750 .... 169, 177, 187
8180311 .... 136, 147, 159
8786514 32
8896941 545
8902175 ..... 443, 449
91083218.....139, 147
DRIVE HYDRAULIC DIAGRAM - 2WD ..451, 455, 459
DRIVE HYDRAULIC DIAGRAM - 4WD ..463, 467
NPN.....275

3121243

JLG®

An Oshkosh Corporation Company

Corporate Office
JLG Industries, Inc.
1 JLG Drive
McConnellsburg, PA 17233-9533 USA
(717) 485-5161 (Corporate)
(877) 554-5438 (Customer Support)
(717) 485-6417

Visit our website for JLG Worldwide Locations.
www.jlg.com