Illustrated Parts Manual

Model R2632

PVC 2110

P/N 31219123

October 1, 2021 - Rev A

ANSI

CE

UK CA

AS/NZS

An Oshkosh Corporation Company

REVISION LOG

October 1, 2021 - A - Original Issue of Manual (1001370000 Rev W &1001246082 Rev B)

GENERAL INFORMATION

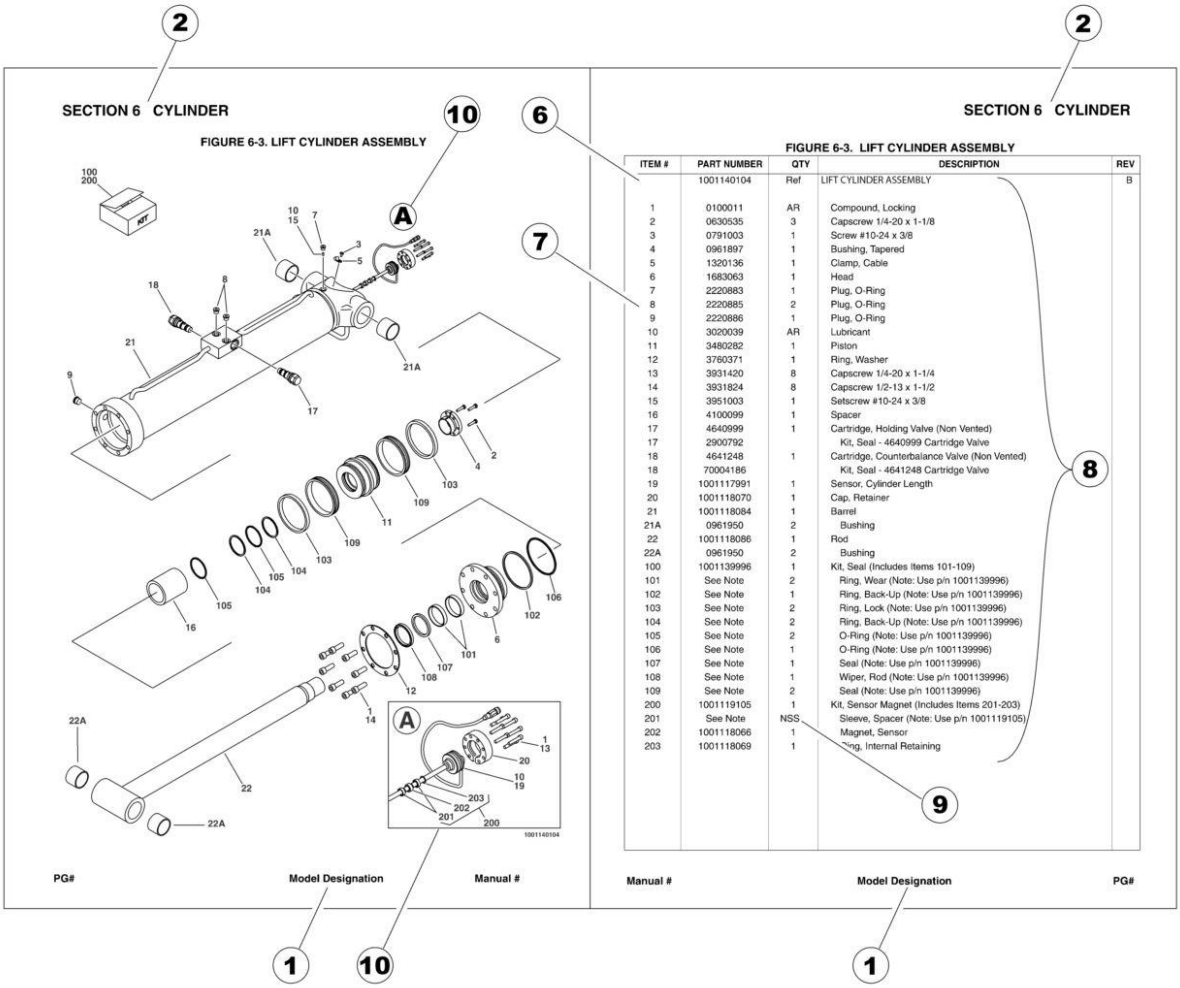

ITEM #	PART NUMBER	QTY	DESCRIPTION	REV
	1001140104	Ref	LIFT CYLINDER ASSEMBLY	B
1	0100011	AR	Compound, Locking	
2	0630535	3	Capscrew 1/4-20 x 1-1/8	
3	0791003	1	Screw #10-24 x 3/8	
4	0961897	1	Bushing, Tapered	
5	1320136	1	Clamp, Cable	
6	1683063	1	Head	
7	2220883	1	Plug, O-Ring	
8	2220885	2	Plug, O-Ring	
9	2220886	1	Plug, O-Ring	
10	3020039	AR	Lubricant	
11	3480282	1	Piston	
12	3760371	1	Ring, Washer	
13	3931420	8	Capscrew 1/4-20 x 1-1/4	
14	3931824	8	Capscrew 1/2-13 x 1-1/2	
15	3951003	1	Setscrew #10-24 x 3/8	
16	4100099	1	Spacer	
17	4640999	1	Cartridge, Holding Valve (Non Vented)	
17	2900792		Kit, Seal - 4640999 Cartridge Valve	
18	4641248	1	Cartridge, Counterbalance Valve (Non Vented)	
18	70004186		Kit, Seal - 4641248 Cartridge Valve	
19	1001117991	1	Sensor, Cylinder Length	
20	1001118070	1	Cap, Retainer	
21	1001118084	1	Barrel	
21A	0961950	2	Bushing	
22	1001118086	1	Rod	
22A	0961950	2	Bushing	
100	1001139996	1	Kit, Seal (Includes Items 101-109)	
101	See Note	2	Ring, Wear (Note: Use p/n 1001139996)	
102	See Note	1	Ring, Back-Up (Note: Use p/n 1001139996)	
103	See Note	2	Ring, Lock (Note: Use p/n 1001139996)	
104	See Note	2	Ring, Back-Up (Note: Use p/n 1001139996)	
105	See Note	2	O-Ring (Note: Use p/n 1001139996)	
106	See Note	1	O-Ring (Note: Use p/n 1001139996)	
107	See Note	1	Seal (Note: Use p/n 1001139996)	
108	See Note	1	Wiper, Rod (Note: Use p/n 1001139996)	
109	See Note	2	Seal (Note: Use p/n 1001139996)	
200	1001119105	1	Kit, Sensor Magnet (Includes Items 201-203)	
201	See Note	NSS	Sleeve, Spacer (Note: Use p/n 1001119105)	
202	1001118066	1	Magnet, Sensor	
203	1001118069	1	Ring, Internal Retaining	

1) MACHINE IDENTIFICATION
Machines are identified by model and in some cases a combination of models, serial number (SN) or regional standard (i.e ANSI, CE,CSA). Components may also be identified by SN or manufacturer. Common components that may be identified by these characteristics are engines and hydraulic components.

2) PARTS MANUAL ORGANIZATION
Product information in this manual is organized under section titles. Frame, Cylinder, Hydraulic and Electrical are a few examples. Each section is organized by figure and page number. The information within the Figure is then organized by item number, part number, description and corresponding illustration (s).

3) TABLE OF CONTENTS (NOT SHOWN)
A table of contents is found toward the beginning of the manual. Figure number, description and page number are provided for quick reference to the page containing the related information.

4) RECOMMENDED SPARE PARTS (NOT SHOWN)
The Recommended Spare Parts List, located near the end of the manual, reference most frequently used maintenance parts.

5) PART NUMBER INDEX (NOT SHOWN)
A numerical index listing all part numbers and the corresponding page number(s) appears at the back of the manual.

GENERAL INFORMATION

6) NON-SERVICED PARTS
In some instances, it is necessary to display non-serviced parts, assemblies or installations. In the case of assemblies and installations there will be a Ref in the Qty. column. In case of parts that are not available for service within assemblies or components, there will be a NSS (Not Sold Separately) or NLA (No Longer Available) listed in the Qty. column of the manual.

7) PARTS LIST ITEM NUMBERS
Numbers shown in the item# column correspond to numbers used in the associated illustration (s). Item numbers which are missing from the sequence in the parts list are not used on that page.

8) INDENTED PARTS DESCRIPTION
An indented part description is included in the item under which it is indented.

9) ABBREVIATION AND SYMBOLS

AC..... Alternating Current
ADE.....Advanced Design Electronics
AG.....Agricultural
ANSI.....American National Standards Institute
AR.....As Required
ASSY..... Assembly
AUS.....Australia
AUX.....Auxiliary
AWG.....American Wire Gauge
B/M.....Bill of Material
CAC.....Charge Air Cooler
CE.....European Conformity
CCW.....Counter Clockwise
CM.....Centimeter
CW.....Clockwise
CSA.....Canadian Standards Association
CYL.....Cylinder
DIA.....Diameter
DC.....Direct Current
DEF.....Diesel Exhaust Fliud
EMS..... Emergency Stop
ENG.....Engine
FT(ft) .....Feet
GA(Ga).....Gauge
HRC.....High Rated Countries
HVAC.....Heating, Ventilating, and Air Conditioning
HYD.....Hydraulic
Hz.....Hertz
ID.....Inside Diameter
IN.....inches
ISO.....International Organization for Standards
JIC.....Joint Industry Council
KG.....Kilogram
L.....Liter
LB(LBS).....Pounds
LCD..... Liquid Crystal Display
LED..... .Light Emitting Diodes
LH.....Left Hand
LRC.....Low Rated Countries
LSS.....Load Sensing System
M(m).....Metric/Meter
MM(mm).....Milimeter
mA.....Miliamps
NLA.....No Longer Available
NPT..... National Pipe Threads
NSS.....Not Sold Separately
OD.....Outside Diameter
ORB..... O-Ring Boss
ORFS.....O-Ring Face Seal
OZ (oz).....Ounces
PG.....Page
PN.....Part Number
QT(qt.). .....Quarts
QTY.....Quantity
REF.....Reference
REV.....Revision Level
RH.....Right Hand
SAE.....Society of Automotive Engineers
SN..... ..Serial Number
SPEC(S).....Specifications
T/T.....Turntable
UGM.....Universal Ground Module
V.....Volts
W.....Watts
#.....Number

10) ILLUSTRATION REFERANCE LETTERS
When necessary, illustrations may contain reference letters that are intended to track information (i. e. hoses, harnesses) from one point to another or to track visual enlargement of components to show details that may be located in another area on the illustration.

Note: Due to continuous product improvements, JLG Industries, Inc. reserves the right to make specification changes without prior notification. Contact JLG Industries, Inc. for updated information.

TABLE OF CONTENTS

SECTION 1 - FRAME 11

FIGURE 1-1. STEER INSTALLATION 12
FIGURE 1-2. DRIVE/BRAKE INSTALLATION 14
FIGURE 1-3. DRIVE MOTOR ASSEMBLY 16
FIGURE 1-4. TIRE/WHEEL INSTALLATION 18
FIGURE 1-5. POTHOLE PROTECTION SYSTEM INSTALLATION 20
FIGURE 1-6. TILT SENSOR INSTALLATION 22
FIGURE 1-7. BATTERY CHARGER INSTALLATION - DELTA-Q (WITHOUT CAN) 24
FIGURE 1-8. BATTERY CHARGER INSTALLATION - DELTA-Q (WITH CAN) 26
FIGURE 1-9. BATTERY CHARGER INSTALLATION - EAGLE PERFORMANCE 28
FIGURE 1-10. BATTERY CHARGER INSTALLATION - GREEN POWER 30
FIGURE 1-11. STROBE LIGHT INSTALLATION - SINGLE (AMBER) (WITH GUARD) 32
FIGURE 1-12. STROBE LIGHT INSTALLATION - DUAL (AMBER) (WITH GUARD) 34
FIGURE 1-13. ALARM INSTALLATION (AMBIENT/WHITE NOISE) 36
FIGURE 1-14. LADDER INSTALLATION 38
FIGURE 1-15. FRAME COVERS INSTALLATION 40

SECTION 2 - GROUND CONTROLS 43

FIGURE 2-1. HYDRAULIC COMPONENTS INSTALLATION 44
FIGURE 2-2. MAIN VALVE ASSEMBLY 46
FIGURE 2-3. ELECTRICAL COMPONENTS INSTALLATION (MACHINES WITH SN STARTING WITH 12, B2, G2 & M2) 48
FIGURE 2-4. ELECTRICAL COMPONENTS INSTALLATION - #1 (MACHINES WITH SN STARTING WITH 12, B2 & G2) 50
FIGURE 2-5. ELECTRICAL COMPONENTS INSTALLATION - #2 (MACHINES WITH SN STARTING WITH 12, B2 & G2) 52
FIGURE 2-6. ACCESS CONTROL KEYPAD INSTALLATION 54
FIGURE 2-7. MOBILE CONTROL INSTALLATION 56
FIGURE 2-8. MDI INSTALLATION 58
FIGURE 2-9. BATTERIES INSTALLATION - STANDARD 6V-250AH 60
FIGURE 2-10. BATTERIES INSTALLATION - STANDARD 6V-220AH 62
FIGURE 2-11. BATTERIES INSTALLATION - AGM 6V-220AH 64
FIGURE 2-12. BATTERIES INSTALLATION - AGM EVCG 6V-220AH 66
FIGURE 2-13. BATTERIES INSTALLATION - 6V-220AH (TROJAN) 68
FIGURE 2-14. INVERTER INSTALLATION (OPTIONAL) 70
FIGURE 2-15. DOORS INSTALLATION 72

SECTION 3 - SCISSORS ARMS 75

FIGURE 3-1. SCISSORS ARMS INSTALLATION 76
FIGURE 3-2. ARM GUARDS INSTALLATION 80

SECTION 4 - PLATFORM 83

FIGURE 4-1. PLATFORM INSTALLATION 84
FIGURE 4-2. PLATFORM EXTENSION INSTALLATION 86
FIGURE 4-3. RAILS INSTALLATION (SIDE BY SIDE) 88
FIGURE 4-4. RAILS INSTALLATION (TUBE IN TUBE) 90
FIGURE 4-5. EXTENSION HANDLES INSTALLATION (OPTIONAL) 92
FIGURE 4-6. GATE LATCH INSTALLATION - OPTIONAL 94
FIGURE 4-7. PLATFORM CONSOLE INSTALLATION (ALL SPECS) 96
FIGURE 4-8. DRIVE/STEER CONTROLLER ASSEMBLY 98
FIGURE 4-9. PIPE RACKS INSTALLATION (OPTIONAL) 100
FIGURE 4-10. OVERHEAD PROTECTION INSTALLATION (KOREAN SPECS) 102
FIGURE 4-11. WOKSTATION INSTALLATION (OPTIONAL) 104
FIGURE 4-12. ELECTRICIAN TREE INSTALLATION (OPTIONAL) 106
FIGURE 4-13. WORKLIGHTS INSTALLATION (OPTIONAL) 108
FIGURE 4-14. PANEL CARRIER INSTALLATION (OPTIONAL) 110
FIGURE 4-15. PLATFORM CONTROL PLUG INSTALLATION 112
FIGURE 4-16. USB/PHONE CRADLE INSTALLATION 114

SECTION 5 - CYLINDER 117

FIGURE 5-1. LIFT CYLINDER ASSEMBLY 118
FIGURE 5-2. STEER CYLINDER ASSEMBLY 120

SECTION 6 - HYDRAULIC 123

TABLE OF CONTENTS

FIGURE 6-1. HYDRAULIC COMPONENTS INSTALLATION 124

SECTION 7 - ELECTRICAL 127

FIGURE 7-1. AC BOX AT PLATFORM INSTALLATION - 110V GFI (ALL SPECS EXCEPT AUSTRALIAN, CE & UK CA SPECS) 128
FIGURE 7-2. AC BOX AT PLATFORM INSTALLATION - 110V IEC YELLOW (CE & UK CA SPECS) 130
FIGURE 7-3. AC BOX AT PLATFORM INSTALLATION - 220V IEC BLUE (CE & UK CA SPECS) 132
FIGURE 7-4. AC BOX AT PLATFORM INSTALLATION - 220V CEE7 POST GROUND (CE & UK CA SPECS) 134
FIGURE 7-5. AC BOX AT PLATFORM INSTALLATION - 220V CEE7 SIDE GROUND (CE & UK CA SPECS) 136
FIGURE 7-6. AC BOX AT PLATFORM INSTALLATION - 220V AFSINT 107 (CE & UK CA SPECS) 138
FIGURE 7-7. AC BOX AT PLATFORM INSTALLATION - 220V LOCALLY SUPPLIED 140
FIGURE 7-8. AC BOX AT PLATFORM INSTALLATION - 220V (AUSTRALIAN SPECS) 142
FIGURE 7-9. AC BOX AT PLATFORM INSTALLATION - 220V CHINA PLUG (CHINA SPECS) 144
FIGURE 7-10. BREAKER BOX KIT (AUSTRALIAN SPEC) 146
FIGURE 7-11. BREAKER BOX KIT WITH 1 DOUBLE BREAKER (CE & UK CA SPECS) 148
FIGURE 7-12. BREAKER BOX KIT WITH 3 BREAKERS (CE & UK CA SPECS) 150
FIGURE 7-13. CAN SPLICE HARNESS (CHARGER WITH COMMUNICATION PORT) 152
FIGURE 7-14. CHARGER HARNESS (CHARGER WITH COMMUNICATION PORT) 154
FIGURE 7-15. CHARGER HARNESS (CHARGER WITH COMMUNICATION PORT) 156
FIGURE 7-16. CHARGER PLUG INSTALLATION (NO PLUG) 158
FIGURE 7-17. CHARGER PLUG INSTALLATION (110V PLUG) 160
FIGURE 7-18. CHARGER PLUG INSTALLATION (KOREAN PLUG) 162
FIGURE 7-19. CHARGER PLUG INSTALLATION (CEE7 PLUG) 164
FIGURE 7-20. CHARGER PLUG INSTALLATION (AFSINT 107 PLUG) 166
FIGURE 7-21. CHARGER PLUG INSTALLATION (IEC YELLOW PLUG) 168
FIGURE 7-22. CHARGER PLUG INSTALLATION (IEC BLUE PLUG) 170
FIGURE 7-23. CHARGER PLUG INSTALLATION (CHINA PLUG) 172
FIGURE 7-24. CHARGER PLUG INSTALLATION (AUSTRALIAN PLUG) 174
FIGURE 7-25. CHASSIS HARNESS 176
FIGURE 7-26. GROUND TO PLATFORM CABLE INSTALLATION - WITHOUT PLATFORM COIL CABLE (MACHINES WITH SN STARTING WITH 12, B2 & G2) 180
FIGURE 7-27. GROUND TO PLATFORM CABLE INSTALLATION - WITHOUT PLATFORM COIL CABLE & WITH FOOTSWITCH (MACHINES WITH SN STARTING WITH 12, B2 & G2) 182
FIGURE 7-28. GROUND TO PLATFORM CABLE INSTALLATION - WITH PLATFORM COIL CABLE (MACHINES WITH SN STARTING WITH 12, B2 & G2) 184
FIGURE 7-29. GROUND TO PLATFORM CABLE INSTALLATION - WITH PLATFORM COIL CABLE & FOOTSWITCH (MACHINES WITH SN STARTING WITH 12, B2 & G2) 186
FIGURE 7-30. GROUND TO PLATFORM CABLE INSTALLATION - PLATFORM STRAIGHT CABLE ONLY (MACHINES WITH SN STARTING WITH 12, B2, G2 & M2) 188
FIGURE 7-31. GROUND TO PLATFORM CABLE INSTALLATION - PLATFORM COIL CABLE ONLY (MACHINES WITH SN STARTING WITH 12, B2, G2 & M2) 190
FIGURE 7-32. GROUND TO PLATFORM CABLE INSTALLATION - SCISSORS ARMS CABLE ONLY (MACHINES WITH SN STARTING WITH 12, B2, G2 & M2) 192
FIGURE 7-33. LIFT DOWN HARNESS 194
FIGURE 7-34. PLATFORM CONTROL BOX HARNESS 196
FIGURE 7-35. RECEPTACLE BOX KIT - 110V GFI 198
FIGURE 7-36. RECEPTACLE BOX KIT - 110V IEC YELLOW (CE & UK CA SPEC) 200
FIGURE 7-37. RECEPTACLE BOX KIT - 220V IEC BLUE (CE & UK CA SPEC) 202
FIGURE 7-38. RECEPTACLE BOX KIT - 220V CEE7 POST GROUND (CE & UK CA SPEC) 204
FIGURE 7-39. RECEPTACLE BOX KIT - 220V CEE7 SIDE GROUND (CE & UK CA SPEC) 206
FIGURE 7-40. RECEPTACLE BOX KIT - 220V AFSINT 107 (CE & UK CA SPEC) 208

SECTION 8 - DECALS 211

FIGURE 8-1. DECAL INSTALLATION (ANSI SPECS) 212
FIGURE 8-2. DECAL INSTALLATION (AUSTRALIAN SPECS) 214
FIGURE 8-3. DECAL INSTALLATION (BRAZIL SPECS) 216
FIGURE 8-4. DECAL INSTALLATION (CE & UK CA SPECS) 218
FIGURE 8-5. DECAL INSTALLATION (CHINA SPECS) 220
FIGURE 8-6. DECAL INSTALLATION (CSA SPECS) 222
FIGURE 8-7. DECAL INSTALLATION (KOREAN SPECS) 224
FIGURE 8-8. DECAL INSTALLATION (LATIN AMERICAN SPECS) 226
FIGURE 8-9. DECAL INSTALLATIONS - OPTIONS 228

SECTION 9 - RECOMMENDED SERVICE PARTS STOCK 231

FIGURE 9-1. RECOMMENDED SERVICE PARTS STOCK 232

SECTION 10 - SPECIAL OPTIONS 233

FIGURE 10-1. SPECIAL OPTIONS 234

PART NUMBER INDEX 237

SECTION 1 - FRAME

FIGURE 1-1. STEER INSTALLATION

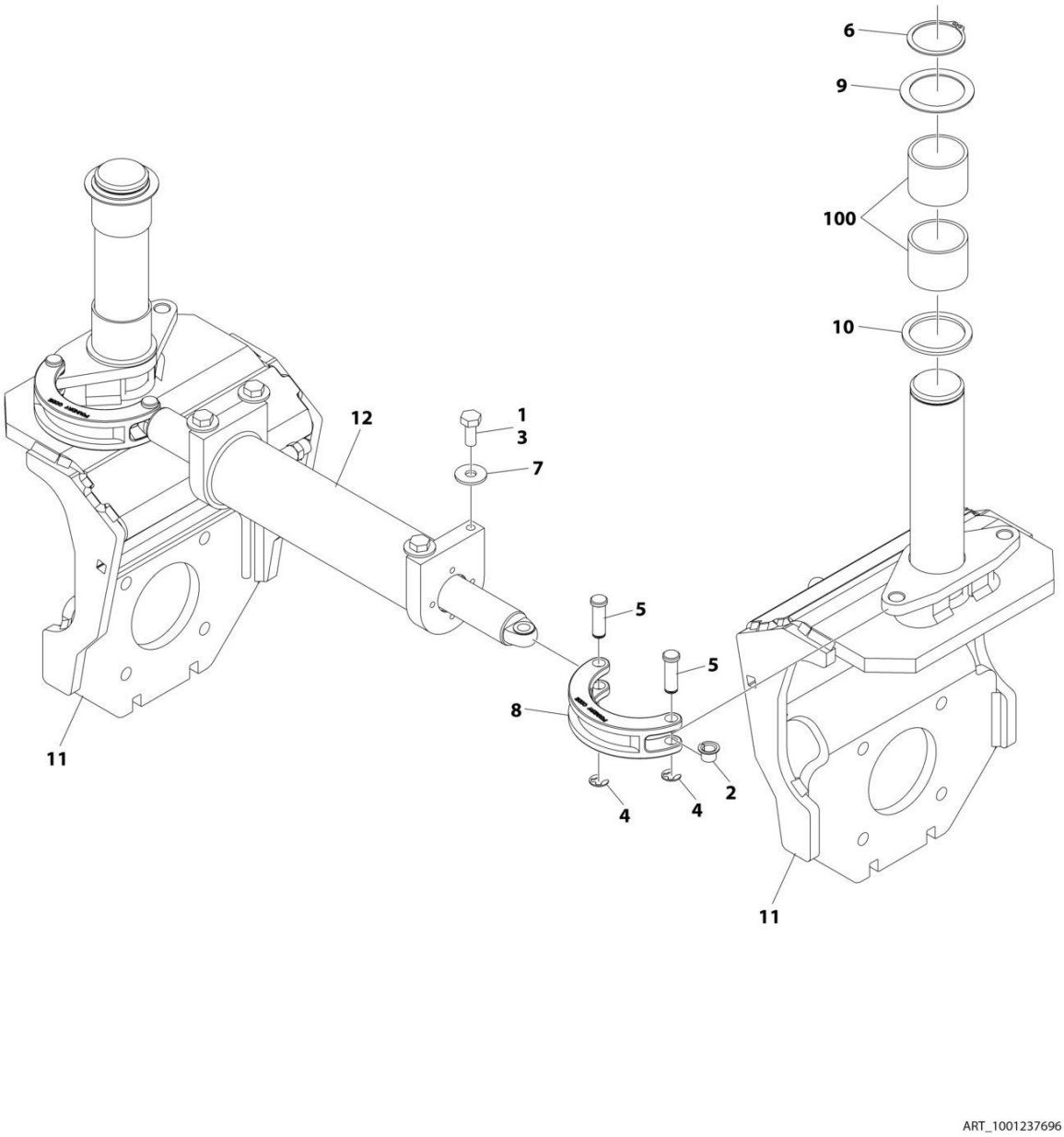

FIGURE 1-1. STEER INSTALLATION

ITEM	PART NUMBER	QTY	DESCRIPTION	REV
	1001237696	Ref	STEER INSTALLATION	A
1	0100011	AR	Compound, Locking	
2	0440259	2	Bearing	
3	0761012	4	Bolt M10 x 25	
4	1380153	4	Clip	
5	3423037	4	Pin	
6	3760217	2	Ring, Retaining	
7	4812000	4	Washer M10	
8	4846757	2	Lug, Steering	
9	1001197396	2	Washer	
10	1001205751	2	Washer	
11	1001234838	2	Spindle	
12	1001179447	1	Steer Cylinder Assembly (See Separate Breakdown in CYLINDER SECTION)	
100	1001153785	4	Bearing (Part of Frame)	

FIGURE 1-2. DRIVE/BRAKE INSTALLATION

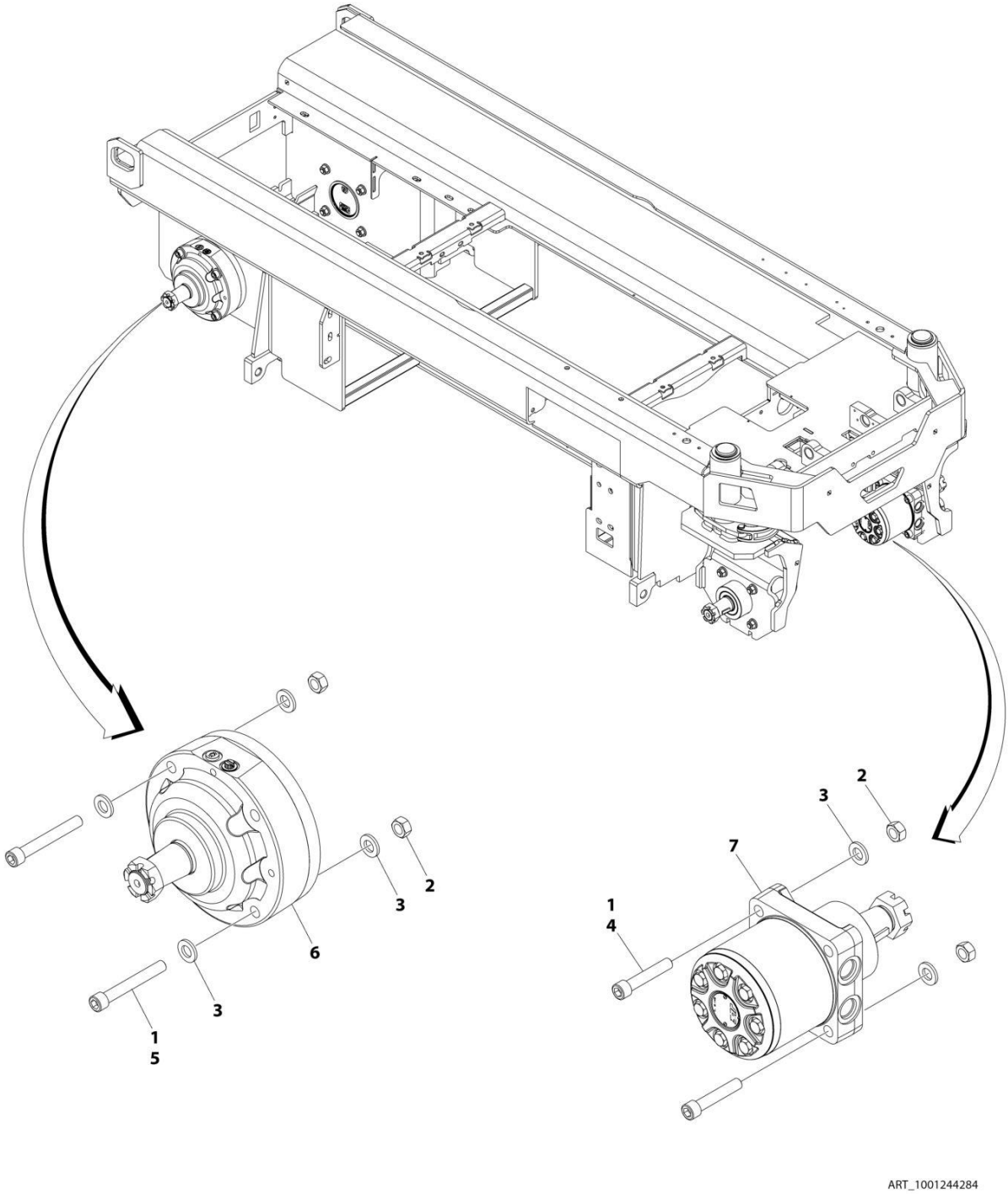

FIGURE 1-2. DRIVE/BRAKE INSTALLATION

ITEM	PART NUMBER	QTY	DESCRIPTION	REV
	1001244284	Ref	DRIVE/BRAKE INSTALLATION	A
1	0100011	AR	Compound, Locking	
2	3331211	16	Nut M12	
3	5241200	24	Washer M12	
4	5272117	8	Capscrew M12 x 65	
5	5272122	8	Capscrew M12 x 90	
6	1001202773	2	Drive Brake Assembly (Note: No Internal Service Parts Available.)	
6	70005918	1	Key, Shaft	
6	70005919	1	Nut 1-1/8	
7	1001213264	2	Drive Motor Assembly (See Separate Breakdown in this Section)	

FIGURE 1-3. DRIVE MOTOR ASSEMBLY

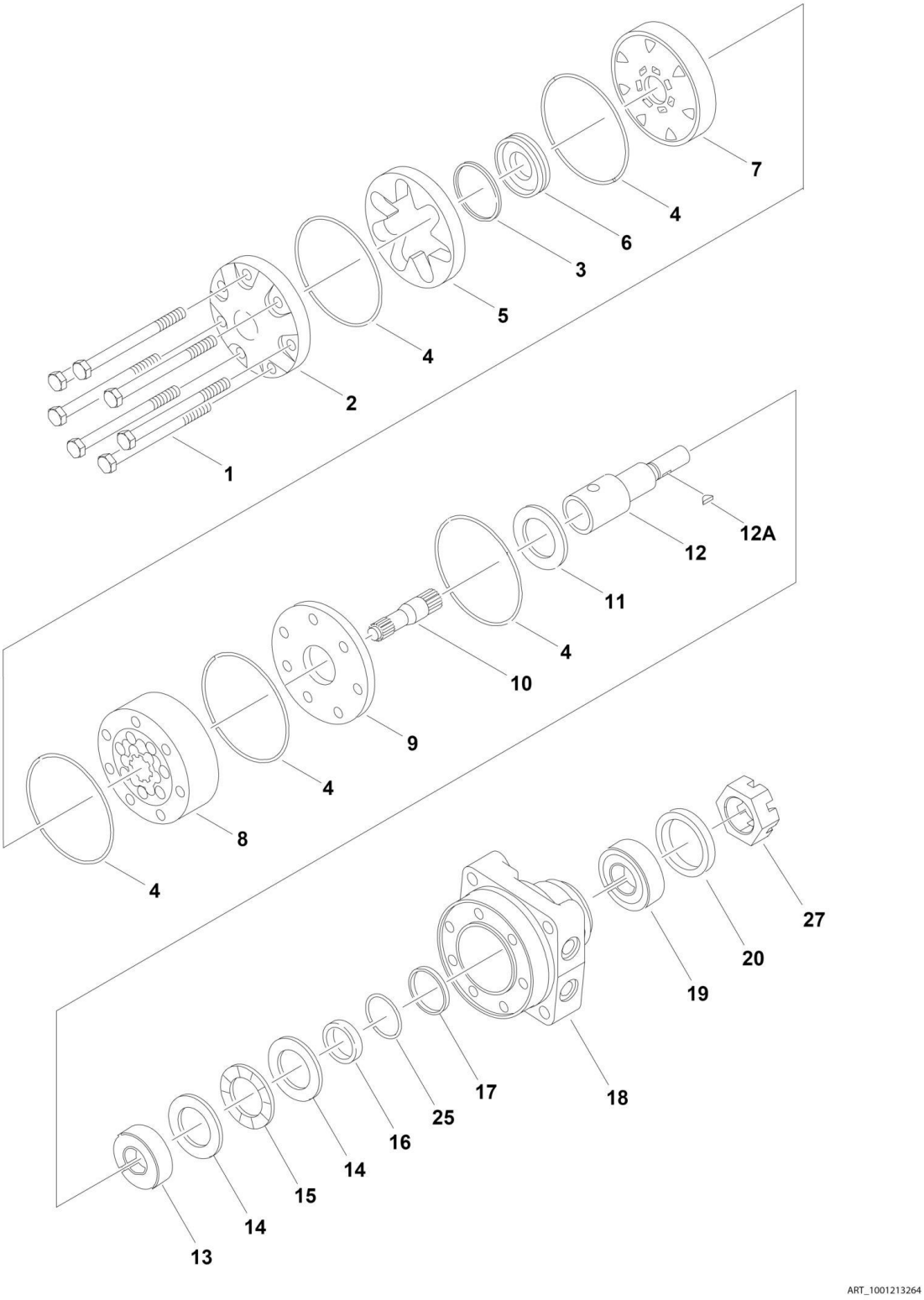

FIGURE 1-3. DRIVE MOTOR ASSEMBLY

ITEM	PART NUMBER	QTY	DESCRIPTION	REV
	1001213264	Ref	DRIVE MOTOR ASSEMBLY	B
1	7023329	7	Bolt	
2	7023328	1	Cover	
3	7023318	1	Seal, Commutator	
4	7023310	5	Ring, Seal	
5	7023315	1	Commutator (Includes Item 6)	
6	See Note	NSS	Ring, Commutator (Use p/n 7023315)	
7	70005812	1	Manifold	
8	70006245	1	Rotor Set	
9	7023311	1	Plate, Wear	
10	70006244	1	Link, Drive	
11	7023308	1	Bearing, Thrust	
12	70005813	1	Shaft	
12A	7023324	1	Key, Shaft (Supplied with Shaft)	
12A	7026179	1	Key, Shaft (Supplied Individually)	
13	7026174	1	Bearing, Inner	
14	70006724	2	Thrustwasher	
15	7023407	1	Bearing, Thrust	
16	70006725	1	Seal	
17	7023321	1	Washer, Backup	
18	See Note	NSS	Housing (Note: Use p/n 1001213264)	
19	7023408	1	Bearing, Outer	
20	70007513	1	Seal, Dirt and Water	
25	7023322	1	Washer, Backup	
27	70005807	1	Nut	

FIGURE 1-4. TIRE/WHEEL INSTALLATION

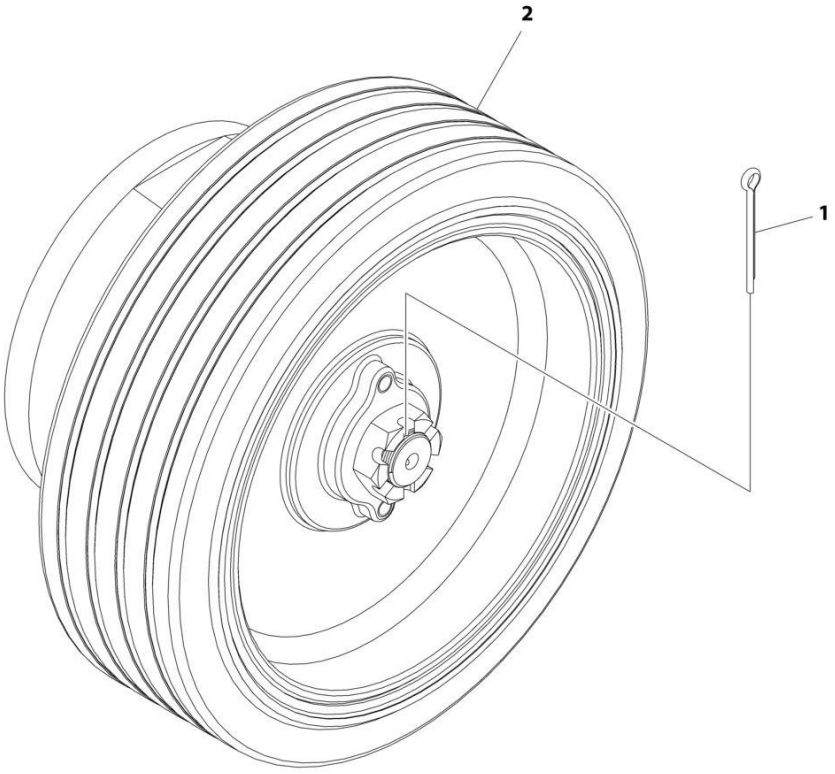

FIGURE 1-4. TIRE/WHEEL INSTALLATION

ITEM	PART NUMBER	QTY	DESCRIPTION	REV
	1001213928	Ref	TIRE AND WHEEL INSTALLATION	A
		Ref	Note: Must Replace Tire and Wheel Assemblies in pairs per axle.	
1	3450508	4	Pin, Cotter 5/32 x 2	
2	1001212187	4	Tire and Wheel	

FIGURE 1-5. POTHOLE PROTECTION SYSTEM INSTALLATION

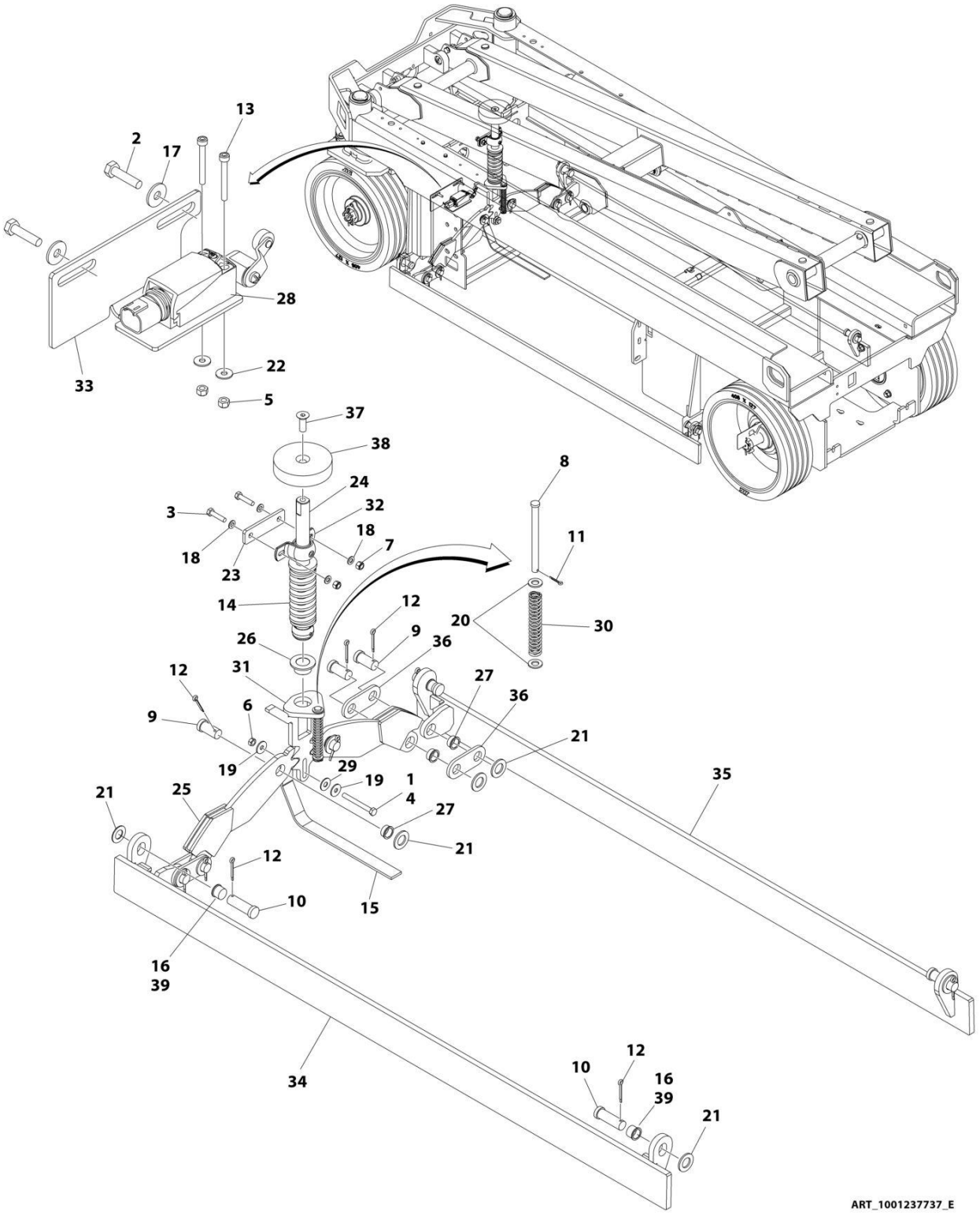

FIGURE 1-5. POTHOLE PROTECTION SYSTEM INSTALLATION

ITEM	PART NUMBER	QTY	DESCRIPTION	REV
	1001237737	Ref	POTHOLE PROTECTION SYSTEM INSTALLATION	E
1	0100011	AR	Compound, Locking	
2	0700612	2	Bolt M6 x 25	
3	0700815	2	Bolt M8 x 35	
4	0700823	1	Bolt M8 x 75	
5	3290405	2	Nut M4	
6	3290801	1	Nut M8	
7	3290805	2	Nut M8	
8	3430636	1	Pin	
9	3431212	6	Pin	
10	3431218	4	Pin	
11	3450302	1	Pin, Cotter 7/8 x 1/2	
12	3450505	10	Pin, Cotter 5/32 x 1/2	
13	4031511	2	Capscrew M4 x 35	
14	4160202	1	Spring	
15	4240147	1	Strap, Anti-Static	
16	4740086	NLA	Washer (Use Item 39)	
17	4811702	2	Washer M6	
18	4811900	4	Washer M8	
19	4811902	2	Washer M8	
20	4812000	2	Washer M10	
21	4812500	10	Washer M20	
22	1001091102	2	Washer M4	
23	1001202987	1	Plate, Mounting	
24	1001214528	1	Actuator (Upper)	
25	1001243781	2	Plate, Pinion	
26	1001203869	1	Bearing	
27	1001203870	6	Bearing	
28	1001203871	1	Switch, Limit	
29	1001203872	1	Washer 3/8	
30	1001227855	1	Spring	
31	1001214526	1	Actuator (Lower)	
32	1001215953	1	Bearing	
33	1001218307	1	Plate, Sensor Mounting	
34	1001234797	1	Bar (LH)	
35	1001234798	1	Bar (RH)	
36	1001236849	4	Link	
37	1001110302	1	Bolt M12 x 35	
38	1001214534	1	Pad, Actuator	
39	0440263	4	Bushing, Flange	

FIGURE 1-6. TILT SENSOR INSTALLATION

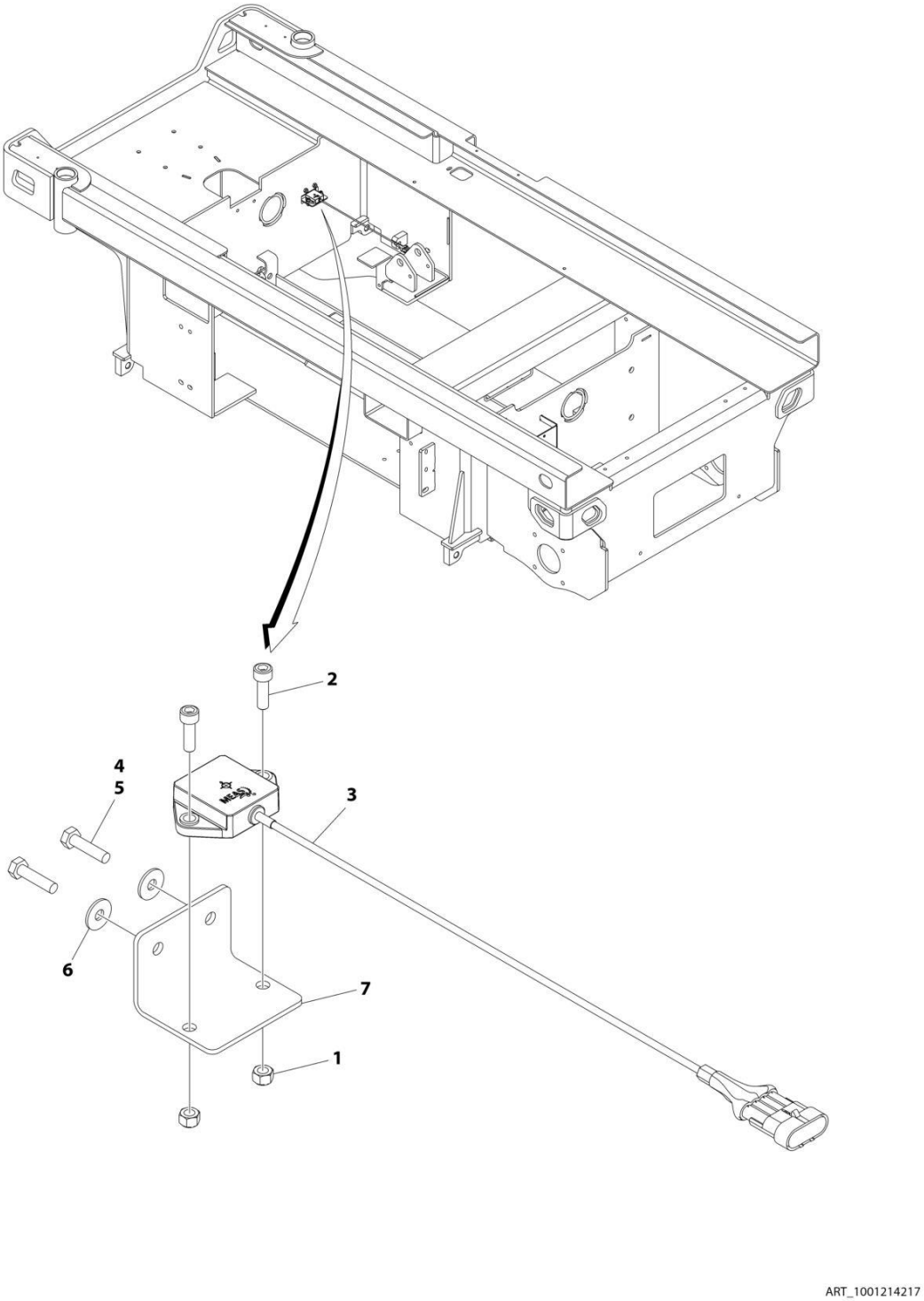

FIGURE 1-6. TILT SENSOR INSTALLATION

ITEM	PART NUMBER	QTY	DESCRIPTION	REV
	1001214217	Ref	TILT SENSOR INSTALLATION	D
1	3290601	2	Nut M6	
2	4031708	2	Capscrew M6 x 20	
3	1001186466	1	Sensor, Tilt	
4	0100011	AR	Compound, Locking	
5	0700612	2	Bolt M6 x 25	
6	4811702	2	Washer M6	
7	1001217059	1	Plate, Mounting	

FIGURE 1-7. BATTERY CHARGER INSTALLATION - DELTA-Q (WITHOUT CAN)

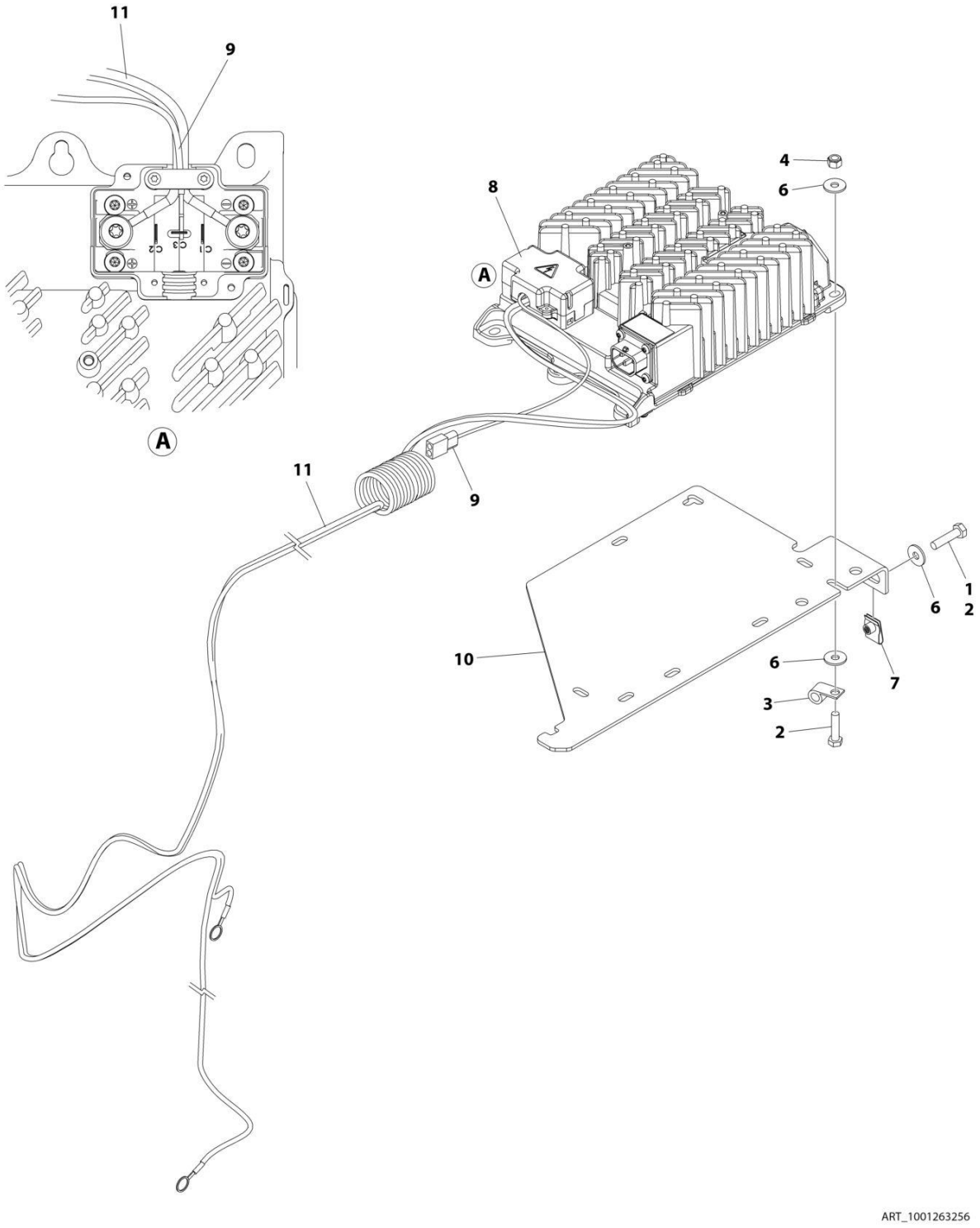

FIGURE 1-7. BATTERY CHARGER INSTALLATION - DELTA-Q (WITHOUT CAN)

ITEM	PART NUMBER	QTY	DESCRIPTION	REV
	1001263256	Ref	BATTERY CHARGER INSTALLATION - DELTA-Q	A
1	0100011	AR	Compound, Locking	
2	0760612	5	Bolt M6 x 25	
3	1321293	1	Clamp	
4	3290605	3	Nut M6	
5	4240017	AR	Tie-Strap (Not Shown)	
6	4811702	8	Washer M6	
7	1001130220	2	Nut, Tinnerman M6	
8	1001200561	1	Charger, Battery - Delta-Q	
9	1001207009	1	Charger Interlock Harness	
9	4460424	1	Receptacle, Female - 2 Position	
9	4460227	2	Pin, Male	
10	1001236139	1	Bracket	
11	1001256642	1	Charger DC Connection Harness	

FIGURE 1-8. BATTERY CHARGER INSTALLATION - DELTA-Q (WITH CAN)

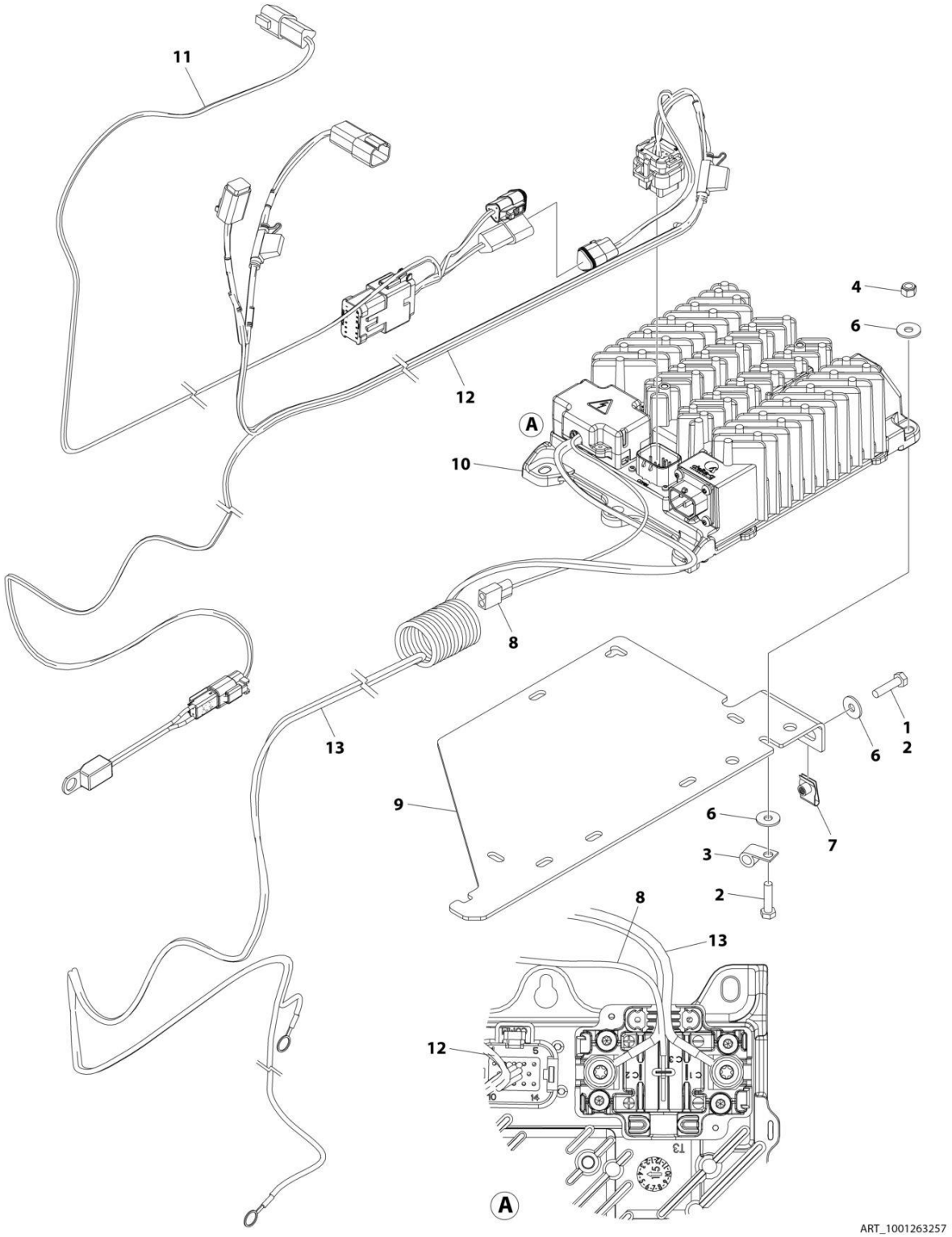

FIGURE 1-8. BATTERY CHARGER INSTALLATION - DELTA-Q (WITH CAN)

ITEM	PART NUMBER	QTY	DESCRIPTION	REV
	1001263257	Ref	BATTERY CHARGER INSTALLATION - DELTA-Q	A
1	0100011	AR	Compound, Locking	
2	0760612	5	Bolt M6 x 25	
3	1321293	1	Clamp	
4	3290605	3	Nut M6	
5	4240017	AR	Tie-Strap (Not Shown)	
6	4811702	8	Washer M6	
7	1001130220	2	Nut, Tinnerman M6	
8	1001207009	1	Charger Interlock Harness	
8	4460424	1	Receptacle, Female - 2 Position	
8	4460227	2	Pin, Male	
9	1001236139	1	Bracket	
10	1001253952	1	Charger, Battery - Delta-Q	
11	1001254027	1	Can Splice Harness (See Separate Breakdown in ELECTRICAL Section)	
12	1001254028	1	Charger To Battery Harness (See Separate Breakdown in ELECTRICAL Section)	
13	1001256642	1	Battery Charger to DC Connection Cable	

FIGURE 1-9. BATTERY CHARGER INSTALLATION - EAGLE PERFORMANCE

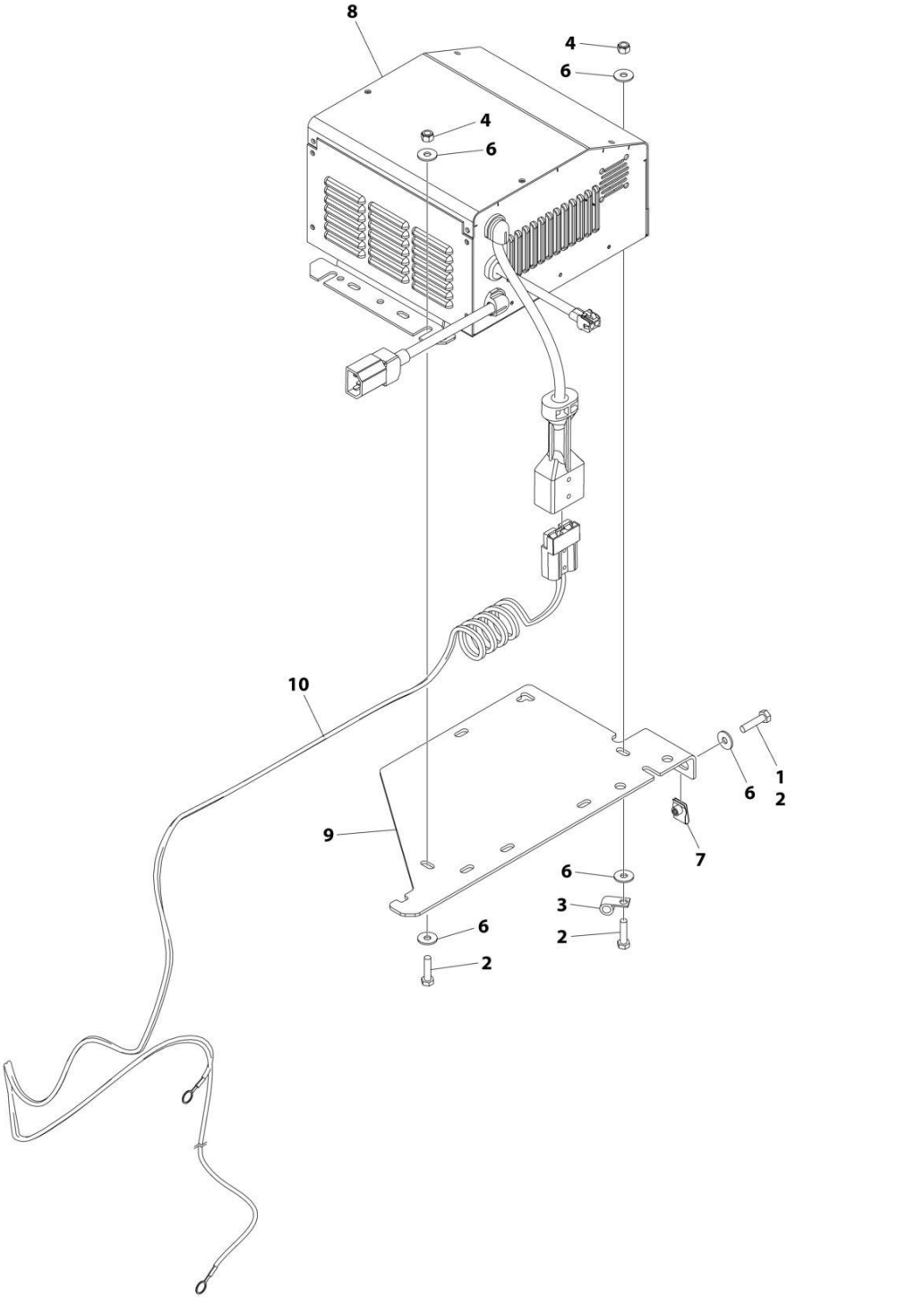

FIGURE 1-9. BATTERY CHARGER INSTALLATION - EAGLE PERFORMANCE

ITEM	PART NUMBER	QTY	DESCRIPTION	REV
	1001263258	Ref	BATTERY CHARGER INSTALLATION - EAGLE PERFORMANCE	A
1	0100011	AR	Compound, Locking	
2	0760612	5	Bolt M6 x 20	
3	1321293	1	Clamp	
4	3290605	3	Nut M6	
5	4240017	AR	Tie-Strap (Not Shown)	
6	4811702	8	Washer M6	
7	1001130220	2	Nut, Tinnerman M6	
8	1001206995	1	Charger, Battery - Eagle Performance	
9	1001236139	1	Bracket	
10	1001256643	1	Charger DC Connection Harness	

FIGURE 1-10. BATTERY CHARGER INSTALLATION - GREEN POWER

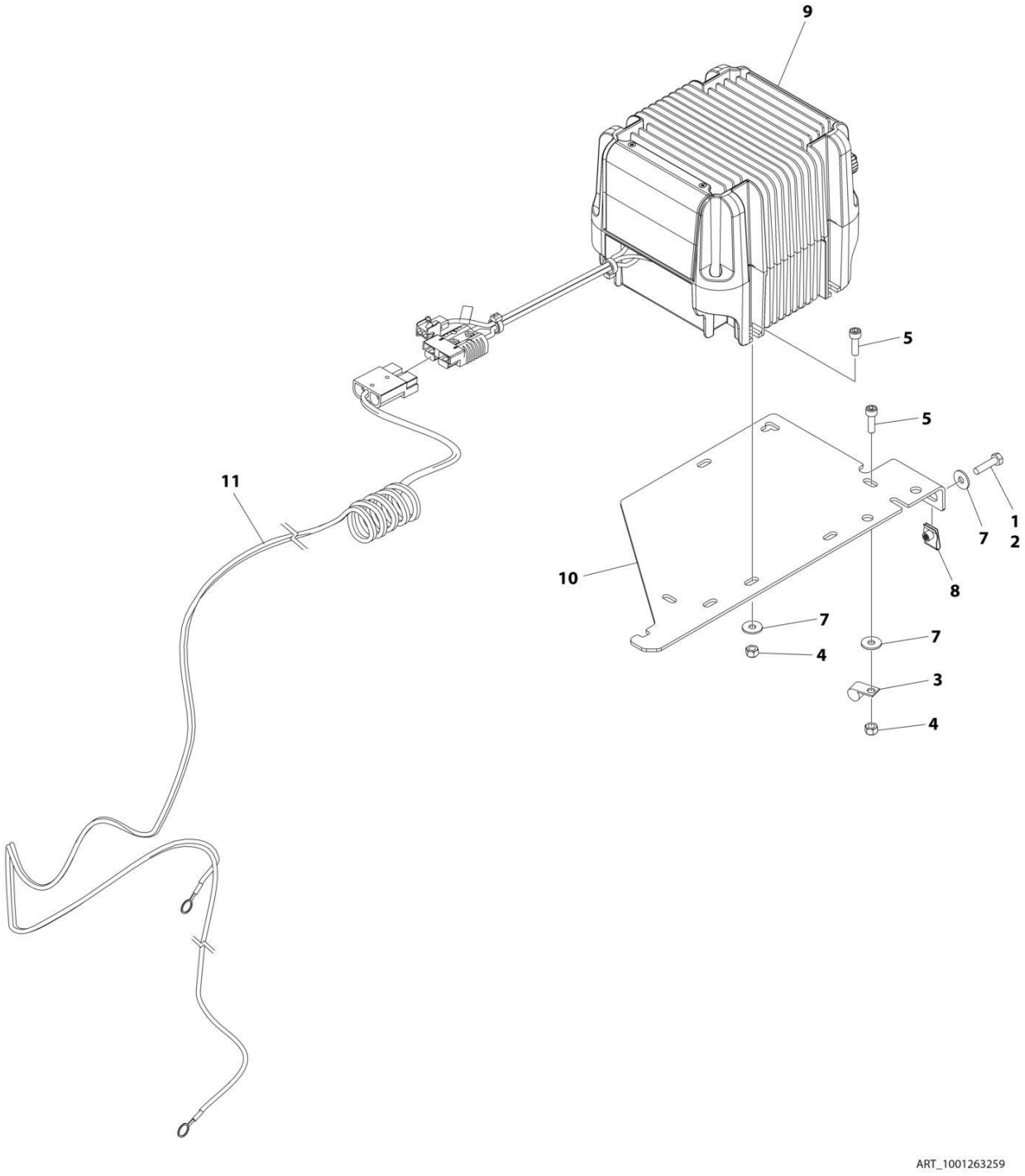

FIGURE 1-10. BATTERY CHARGER INSTALLATION - GREEN POWER

ITEM	PART NUMBER	QTY	DESCRIPTION	REV
	1001263259	Ref	BATTERY CHARGER INSTALLATION - GREEN POWER	A
1	0100011	AR	Compound, Locking	
2	0700612	2	Bolt M6 x 25	
3	1321293	1	Clamp, Cable	
4	3290605	4	Nut M6	
5	4031708	4	Capscrew M6 x 20	
6	4240017	AR	Tie-Strap (Not Shown)	
7	4811702	6	Washer M6	
8	1001130220	2	Nut, Tinnerman M6	
9	1001205598	1	Charger, Battery Green Power	
10	1001236139	1	Bracket	
11	1001256643	1	Charger DC Connection Harness	

FIGURE 1-11. STROBE LIGHT INSTALLATION - SINGLE (AMBER) (WITH GUARD)

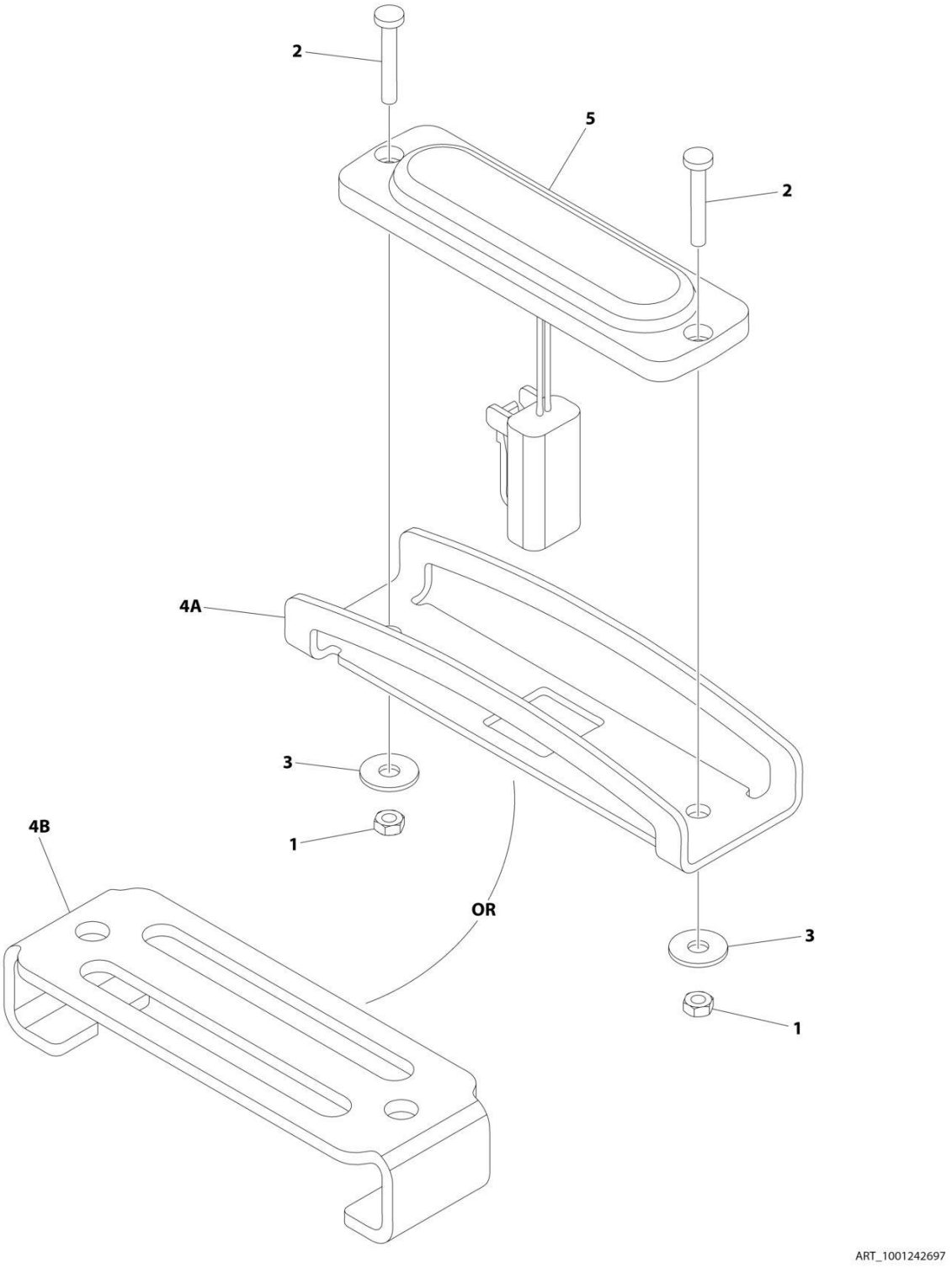

FIGURE 1-11. STROBE LIGHT INSTALLATION - SINGLE (AMBER) (WITH GUARD)

ITEM	PART NUMBER	QTY	DESCRIPTION	REV
	1001242697	Ref	STROBE LIGHT INSTALLATION - SINGLE (AMBER) (WITH GUARD)	D
1	3290305	2	Nut M3	
2	4010310	2	Screw M3 x 20	
3	1001091102	2	Washer M4	
4A	1001242539	1	Guard	
4B	1001239661	1	Cover	
5	1001239224	1	Light, Strobe	
5	4460891	1	Plug, Male - 2 Position	
5	4460465	2	Socket, Female	

FIGURE 1-12. STROBE LIGHT INSTALLATION - DUAL (AMBER) (WITH GUARD)

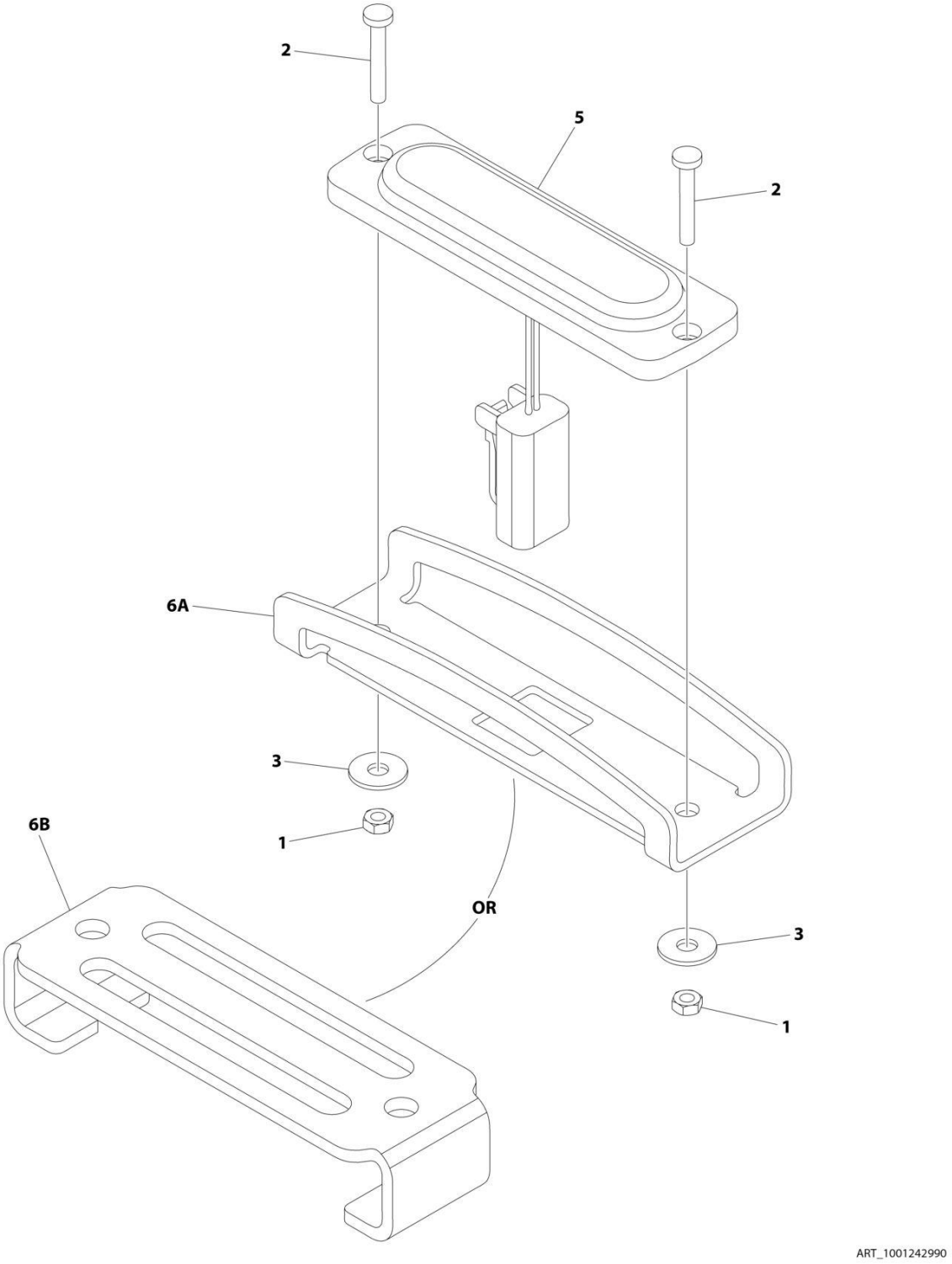

FIGURE 1-12. STROBE LIGHT INSTALLATION - DUAL (AMBER) (WITH GUARD)

ITEM	PART NUMBER	QTY	DESCRIPTION	REV
	1001242990	Ref	STROBE LIGHT INSTALLATION - DUAL (AMBER) (WITH GUARD)	D
1	3290305	4	Nut M3	
2	4010310	4	Screw M3 x 20	
3	1001091102	4	Washer M4	
4	1001215216	1	Strobe Light Jumper Harness (Not Shown)	
4	4460897	2	Receptacle, Female - 2 Position	
4	4460464	4	Pin, Male	
4	4460891	1	Plug, Male - 2 Position	
4	4460465	2	Socket, Female	
5	1001239224	2	Light, Strobe	
5	4460891	1	Plug, Male - 2 Position	
5	4460465	2	Socket, Female	
6A	1001242539	2	Guard	
6B	1001239661	2	Cover	
7	4240018	AR	Tie-Strap (Not Shown)	

FIGURE 1-13. ALARM INSTALLATION (AMBIENT/WHITE NOISE)

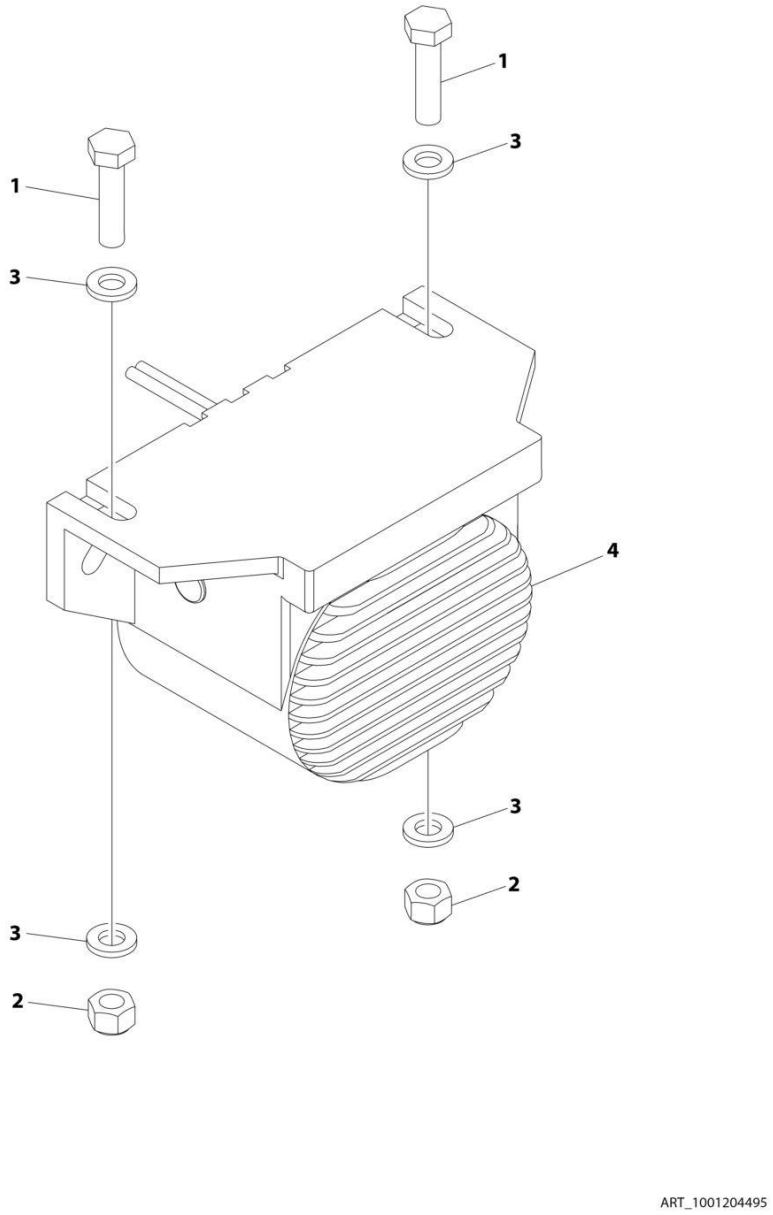

FIGURE 1-13. ALARM INSTALLATION (AMBIENT/WHITE NOISE)

ITEM	PART NUMBER	QTY	DESCRIPTION	REV
	1001204495	Ref	ALARM INSTALLATION (AMBIENT/WHITE NOISE)	B
1	0760612	2	Bolt M6 x 25	
2	3290605	2	Nut M6	
3	4811700	4	Washer M6	
4	1001182806	1	Alarm	
4	4460897	1	Receptacle, Female - 2 Position	
4	4460464	2	Pin, Male	

FIGURE 1-14. LADDER INSTALLATION

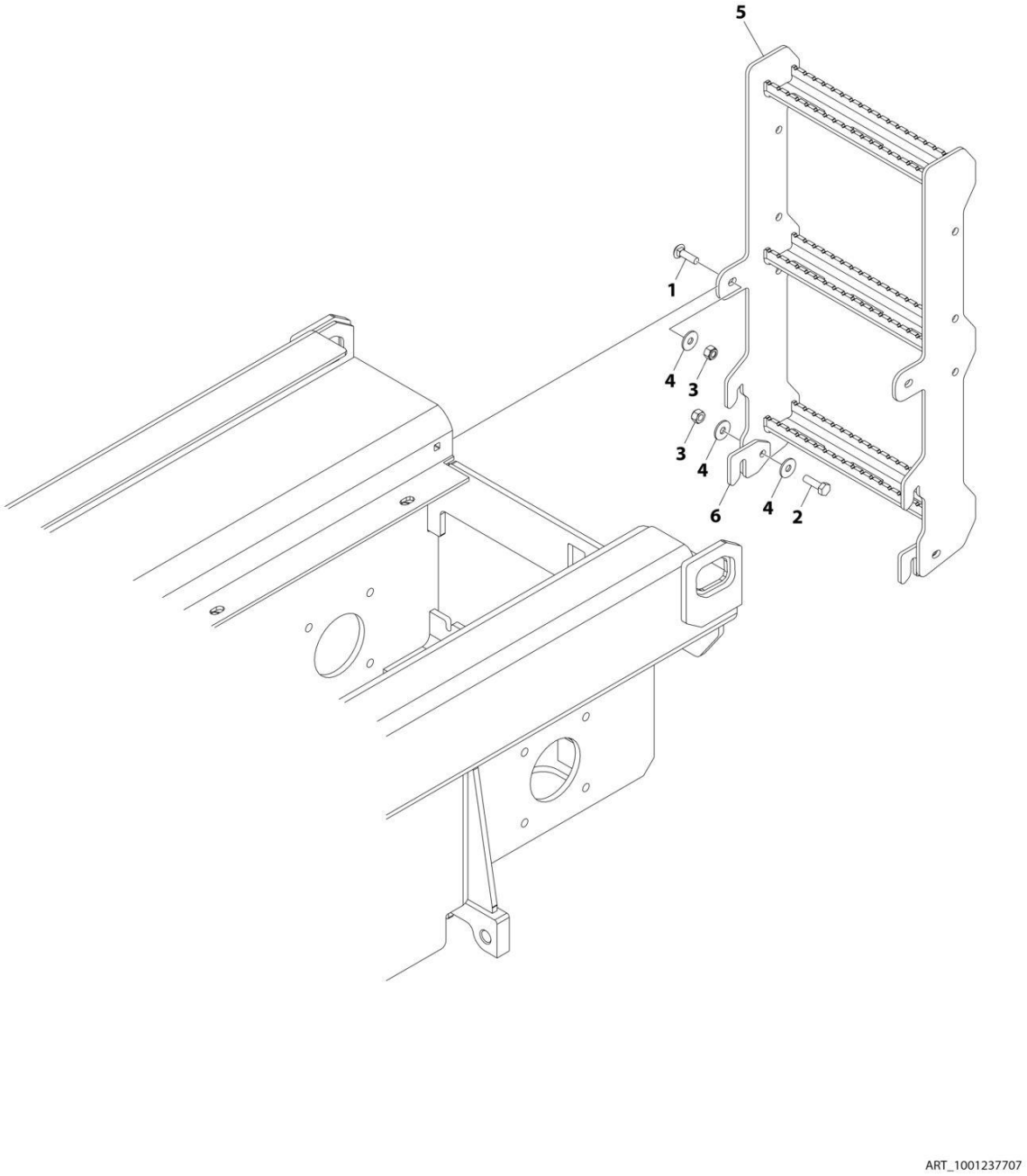

FIGURE 1-14. LADDER INSTALLATION

ITEM	PART NUMBER	QTY	DESCRIPTION	REV
	1001237707	Ref	LADDER INSTALLATION	B
1	1001228406	2	Bolt M10 x 35	
2	0761015	2	Bolt M10 x 35	
3	3291005	4	Nut M10	
4	4812002	6	Washer M10	
5	1001234842	1	Ladder	
6	1001235955	2	Bracket	
6	1001237708	2	Bracket	

FIGURE 1-15. FRAME COVERS INSTALLATION

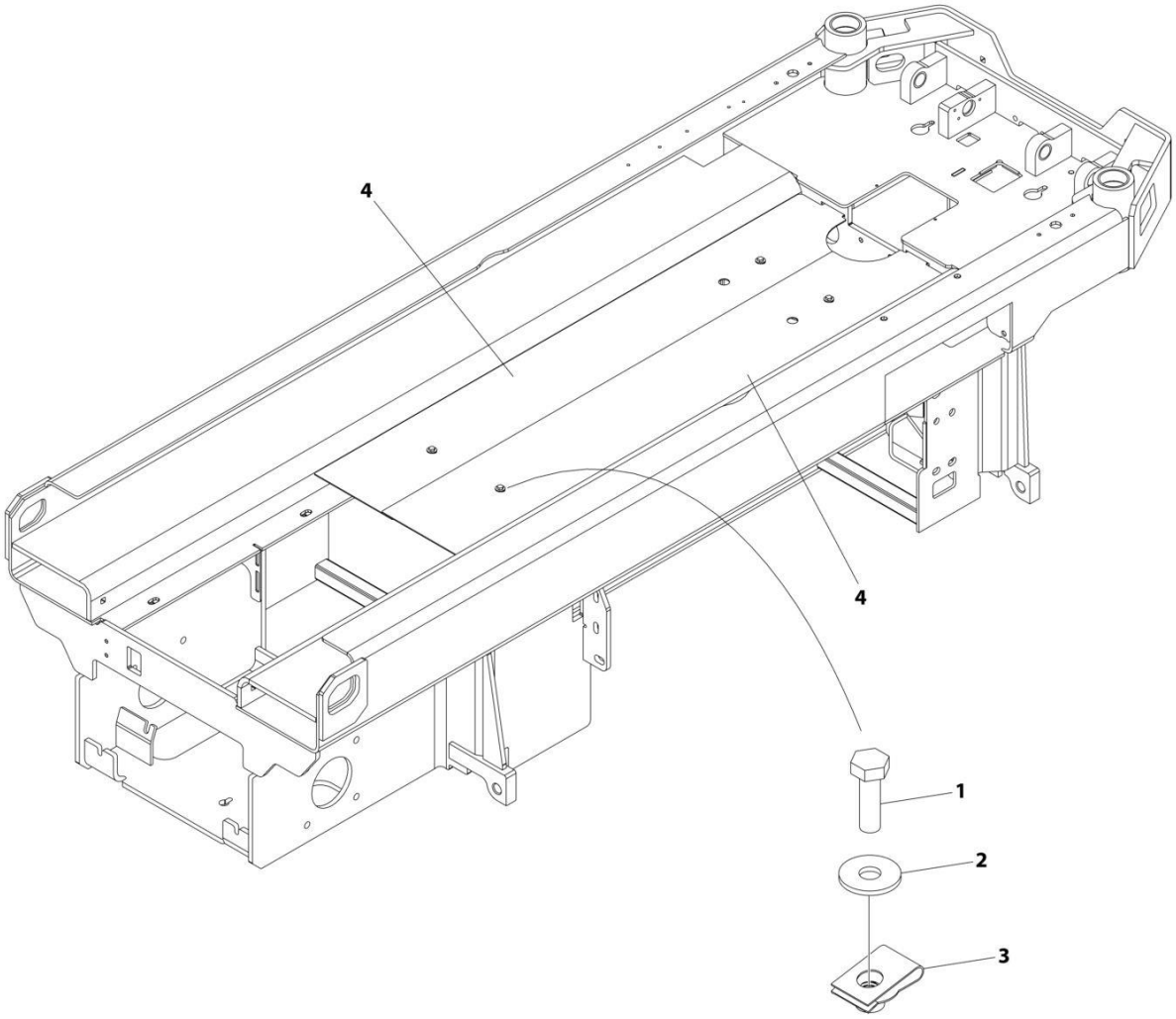

ART_1001237855

FIGURE 1-15. FRAME COVERS INSTALLATION

ITEM	PART NUMBER	QTY	DESCRIPTION	REV
	1001237855	Ref	FRAME COVERS INSTALLATION	A
1	0760610	4	Bolt M6 x 20	
2	4811702	4	Washer M6	
3	1001130220	4	Nut, Tinnerman M6	
4	1001237856	2	Cover	

SECTION 2 - GROUND CONTROLS

FIGURE 2-1. HYDRAULIC COMPONENTS INSTALLATION

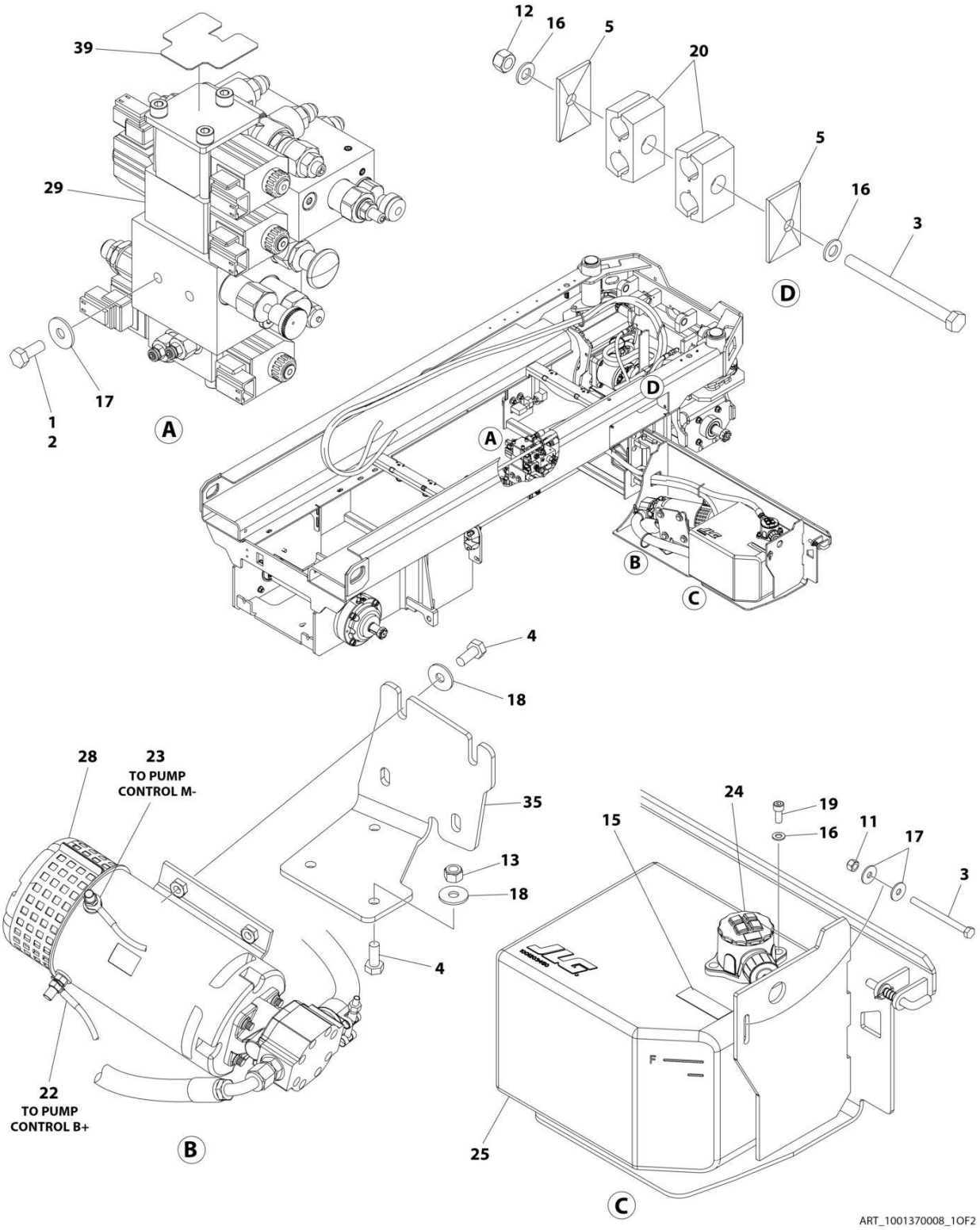

FIGURE 2-1. HYDRAULIC COMPONENTS INSTALLATION

ITEM	PART NUMBER	QTY	DESCRIPTION	REV
	1001370008	Ref	HYDRAULIC COMPONENTS INSTALLATION	D
1	0100011	AR	Compound, Locking	
2	0760810	2	Bolt M8 x 20	
3	0760827	2	Bolt M8 x 100	
4	0761012	7	Bolt M8 x 25	
5	1321752	2	Plate, Clamp	
11	3290801	1	Nut M8	
12	3290805	1	Nut M8	
13	3291005	3	Nut M10	
14	4240017	12	Tie-Strap (Not Shown)	
15	4420062	75 mm	Tape	
16	4811900	4	Washer M8	
17	4811902	4	Washer M8	
18	4812002	7	Washer M10	
19	5271808	2	Capscrew M8 x 20	
20	8750014	2	Clamp	
22	1001201705	1	Cable, Pump (+)	
23	1001201706	1	Cable, Pump (-)	
24	1001202851	1	Filter, Hydraulic	
24	70005423	1	Filter Element Kit (Includes Element, Cap O-Ring and Bowl O-Ring)	
24	70007946	1	O-Ring, Bowl	
25	1001203450	1	Tank, Hydraulic	
28	1001213875	1	Motor/Pump Assembly	
28	70006351	1	Replacement Motor	
28	70006352	1	Replacement Pump	
28	70005816	1	Seal and Mounting Kit (Includes Shaft Seal, Retaining Ring, Gasket and Pump Mounting Hardware)	
29	1001248679	1	Main Valve Assembly (See Separate Breakdown in this Section)	
35	1001241894	1	Bracket	
39	1001212294	1	Decal - Manifold	

FIGURE 2-2. MAIN VALVE ASSEMBLY

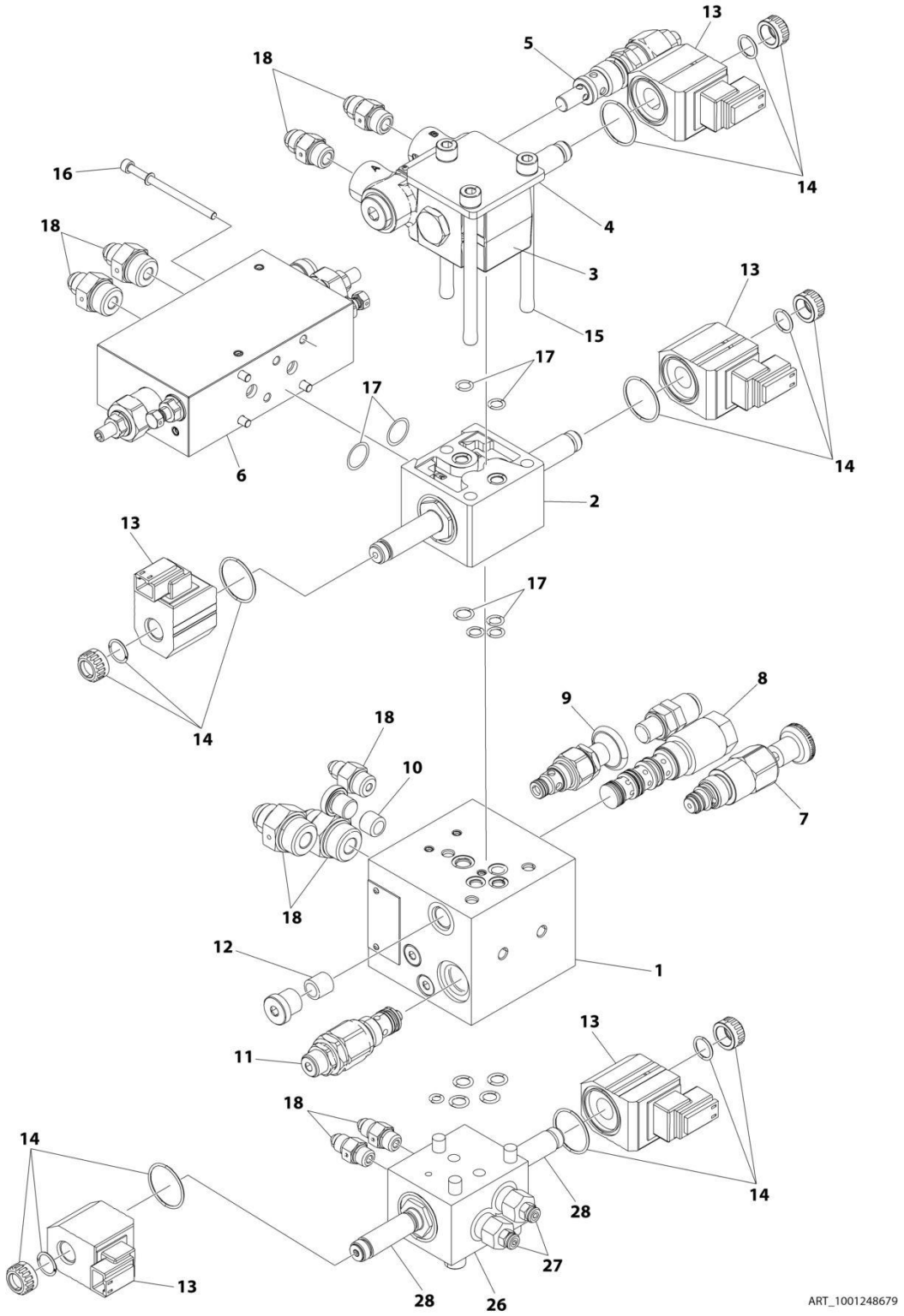

FIGURE 2-2. MAIN VALVE ASSEMBLY

ITEM	PART NUMBER	QTY	DESCRIPTION	REV
	1001248679	Ref	MAIN VALVE ASSEMBLY	D
1	70007595	1	Valve Assembly (Includes Items 7-9)	
2	70005903	1	Valve Assembly - Lower Drive	
3	70007594	1	Valve Assembly - Lift	
4	70005911	1	Plate	
5	70005909	1	Valve, Cartridge	
6	70007593	1	Valve Assembly - Upperr Drive	
7	70005900	1	Valve, Cartridge	
8	70005898	1	Valve, Cartridge	
9	70005899	1	Valve, Cartridge	
10	70007598	1	Restrictor, Flow	
11	70007596	1	Cartridge, Valve	
12	70007597	1	Orifice	
13	70005893	5	Coil	
14	70021209	5	Coil Nut Kit	
15	70007599	1	Bolt Kit	
16	70007600	1	Bolt Kit	
17	70007601	1	Seal Kit	
18	70007602	1	Fitting Kit	
26	NPN	1	Valve Assembly - Steer	
27	70006301	2	Valve, Cartridge - Relief	
28	NPN	2	Valve, Solenoid Cartridge	

FIGURE 2-3. ELECTRICAL COMPONENTS INSTALLATION (MACHINES WITH SN STARTING WITH 12, B2, G2 & M2)

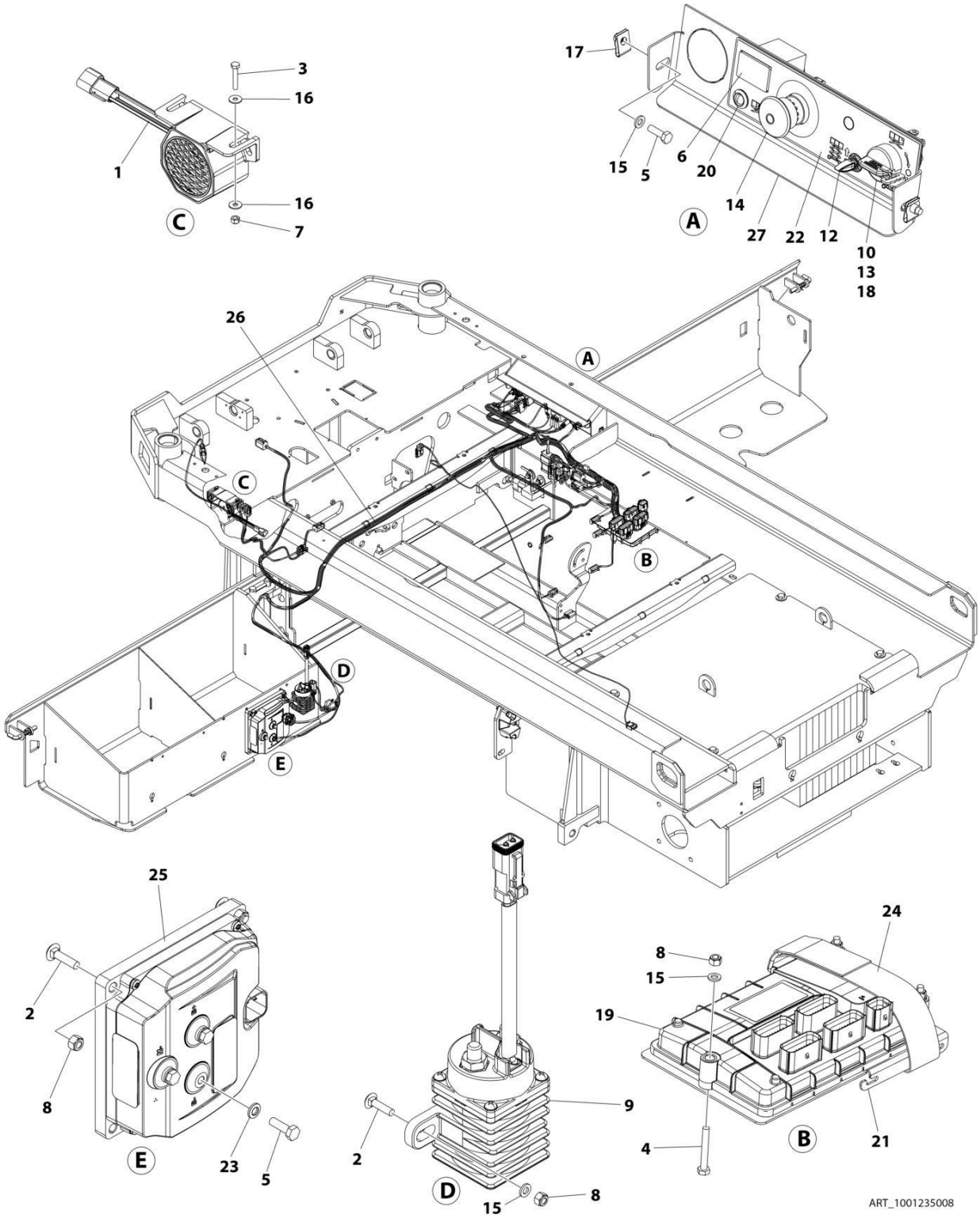

FIGURE 2-3. ELECTRICAL COMPONENTS INSTALLATION (MACHINES WITH SN STARTING WITH 12, B2, G2 & M2)

ITEM	PART NUMBER	QTY	DESCRIPTION	REV
	1001235008	Ref	ELECTRICAL COMPONENTS INSTALLATION	C
1	0140043	1	Alarm	
2	0630587	4	Bolt M6 x 25	
3	0700412	2	Bolt M4 x 25	
4	0700617	3	Bolt M6 x 45	
5	0760610	5	Bolt M6 x 20	
6	2420172	1	Hourmeter	
7	3290405	2	Nut M4	
8	3290605	7	Nut M6	
9	3740150	1	Relay	
10	3910804	3	Screw #8 x 1/4	
11	4240017	AR	Tie-Strap (Not Shown)	
12	4360328	1	Switch, Toggle	
13	4360469	1	Switch, Key	
13	2860030	1 Set	Key, Replacement	
14	4360475	1	Switch, Emergency Stop (Metal)	
14	7020175	1	Cap	
14	7020176	1	Block, Contact	
14	1001274559	1	Switch, Emergency Stop (Plastic)	
15	4811700	7	Washer M6	
16	1001091102	4	Washer M4	
17	1001130220	2	Nut Tinnerman M6	
18	1001130590	1	Plate	
19	1001200629	1	Module, Control (Note: Recalibration Required when Replaced)	
20	1001200631	1	Light, Indicator (Red)	
21	1001207494	1	Bracket	
22	1001209682	1	Decal - Ground Control	
23	1001210966	3	Washer	
24	1001215762	1	Strap, Clinch	
25	1001216062	1	Module, Power (Note: Recalibration Required when Replaced)	
26	1001234479	1	Chassis Harness (See Separate Breakdown in ELECTRICAL SECTION)	
27	1001235559	1	Support	

FIGURE 2-4. ELECTRICAL COMPONENTS INSTALLATION - #1 (MACHINES WITH SN STARTING WITH 12, B2 & G2)

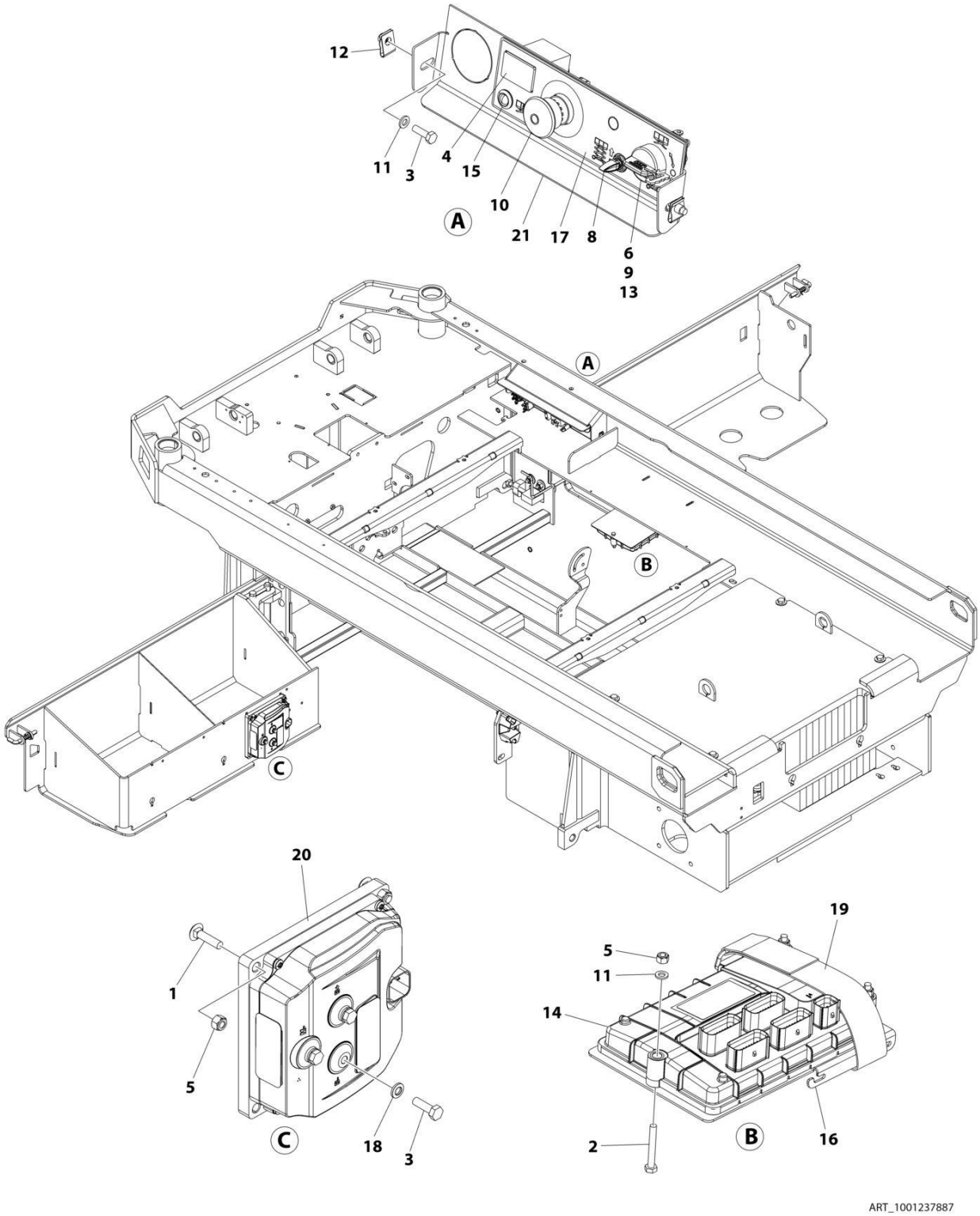

FIGURE 2-4. ELECTRICAL COMPONENTS INSTALLATION - #1 (MACHINES WITH SN STARTING WITH 12, B2 & G2)

ITEM	PART NUMBER	QTY	DESCRIPTION	REV
	1001237887	Ref	ELECTRICAL COMPONENTS INSTALLATION	B
1	0630587	2	Bolt M6 x 25	
2	0700617	3	Bolt M6 x 45	
3	0760610	5	Bolt M6 x 20	
4	2420172	1	Hourmeter	
5	3290605	5	Nut M6	
6	3910804	3	Screw #8 x 1/4	
7	4240017	AR	Tie-Strap (Not Shown)	
8	4360328	1	Switch, Toggle	
9	4360469	1	Switch, Key	
9	2860030	1 Set	Key, Replacement	
10	4360475	1	Switch, Emergency Stop (Metal)	
10	7020175	1	Cap	
10	7020176	1	Block, Contact	
10	1001274559	1	Switch, Emergency Stop (Plastic)	
11	4811700	5	Washer M6	
12	1001130220	2	Nut Tinnerman M6	
13	1001130590	1	Plate	
14	1001200629	1	Module, Control (Note: Recalibration Required when Replaced)	
15	1001200631	1	Light, Indicator (Red)	
16	1001207494	1	Bracket	
17	1001209682	1	Decal - Ground Control	
18	1001210966	3	Washer	
19	1001215762	1	Strap, Clinch	
20	1001216062	1	Module, Power (Note: Recalibration Required when Replaced)	
21	1001235559	1	Support	

FIGURE 2-5. ELECTRICAL COMPONENTS INSTALLATION - #2 (MACHINES WITH SN STARTING WITH 12, B2 & G2)

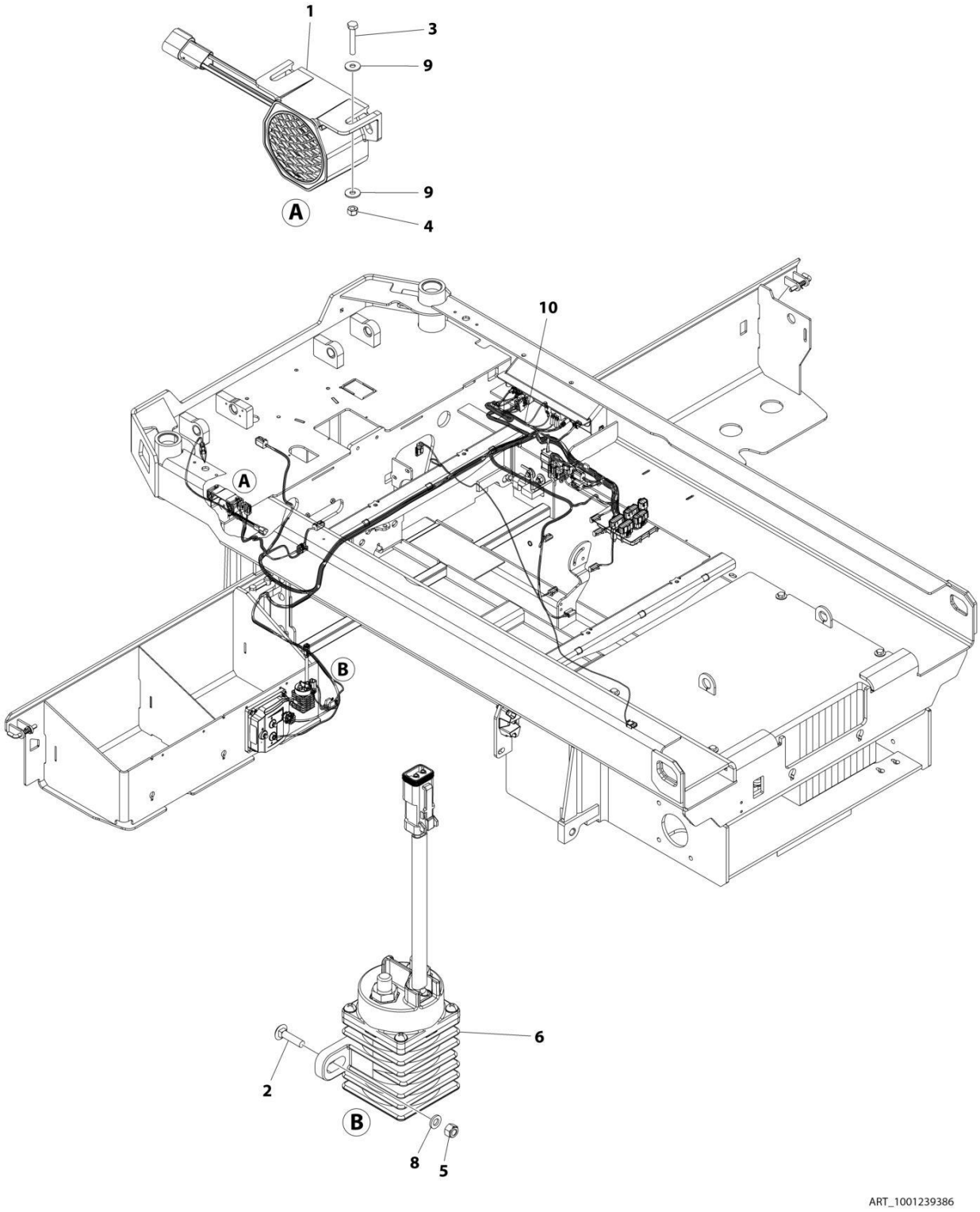

FIGURE 2-5. ELECTRICAL COMPONENTS INSTALLATION - #2 (MACHINES WITH SN STARTING WITH 12, B2 & G2)

ITEM	PART NUMBER	QTY	DESCRIPTION	REV
	1001239386	Ref	ELECTRICAL COMPONENTS INSTALLATION	B
1	0140043	1	Alarm	
2	0630587	2	Bolt M6 x 25	
3	0700412	2	Bolt M4 x 25	
4	3290405	2	Nut M4	
5	3290605	2	Nut M6	
6	3740150	1	Relay	
7	4240017	AR	Tie-Strap (Not Shown)	
8	4811700	2	Washer M6	
9	1001091102	4	Washer M4	
10	1001283410	1	Chassis Harness with ClearSky (See Separate Breakdown in ELECTRICAL SECTION)	

FIGURE 2-6. ACCESS CONTROL KEYPAD INSTALLATION

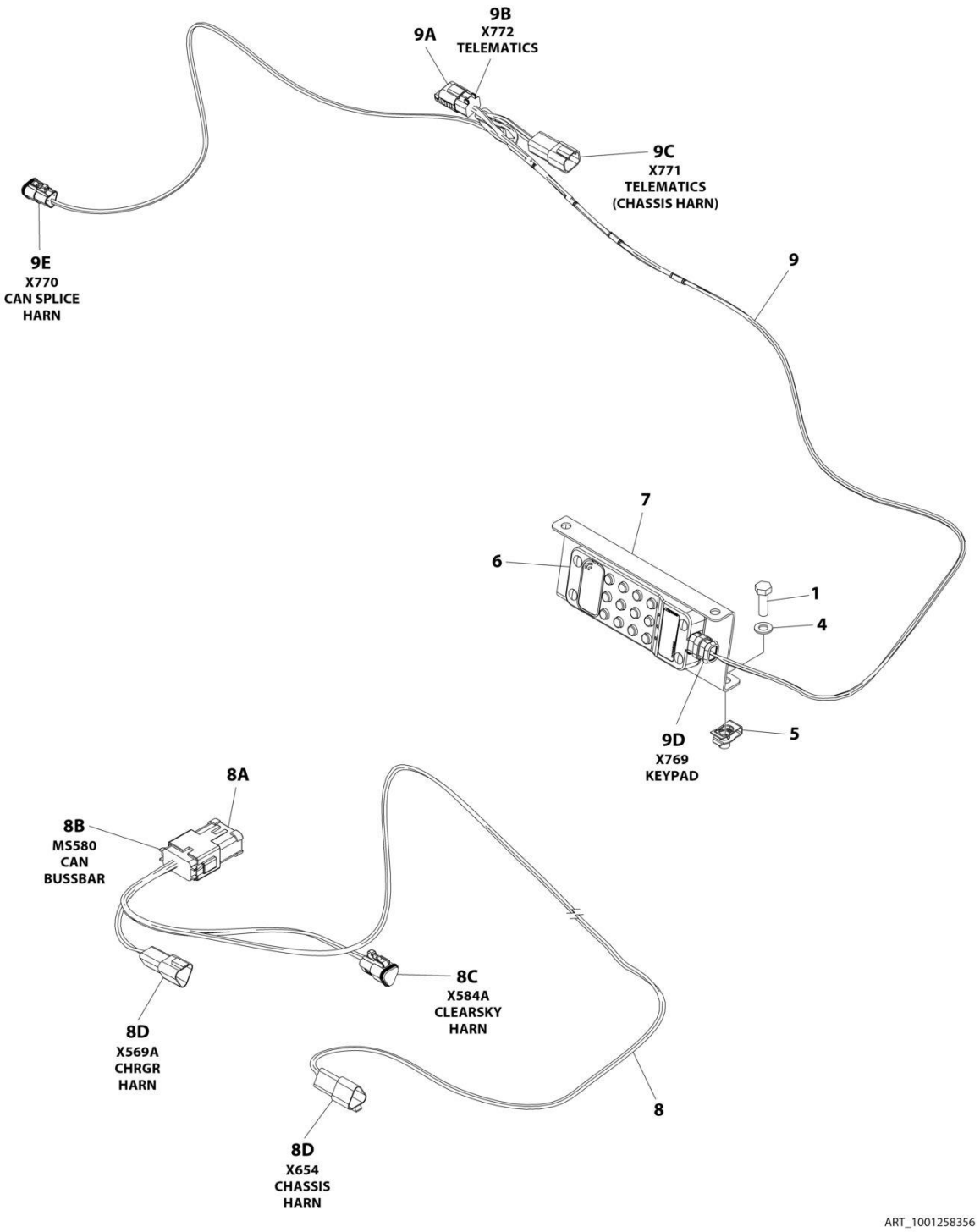

FIGURE 2-6. ACCESS CONTROL KEYPAD INSTALLATION

ITEM	PART NUMBER	QTY	DESCRIPTION	REV
	1001258356	Ref	ACCESS CONTROL KEYPAD INSTALLATION	A
1	0760812	2	Bolt, M8 x 25	
2	1062255	AR	Tie-Strap (Not Shown)	
3	4240032	AR	Tie-Strap (Not Shown)	
4	4811900	2	Washer M8	
5	1001118274	2	Nut, Tinnerman	
6	1001238392	1	Keypad	
7	1001248773	1	Bracket	
8	1001254027	1	Access Control Keypad Can Splice Harness	
8A	1001125677	AR	Connector, Bus Bar - 12 Position	
8B	4460933	1	Plug, Male - 12 Position	
8B	4460944	6	Socket, Female	
8B	4460466	6	Plug, Terminal	
8C	1001118812	1	Plug, Male - 3 Position	
8C	4460944	2	Socket, Female	
8C	4460466	1	Plug, Terminal	
8D	1001144147	2	Receptacle, Female - 3 Position	
8D	4460943	4	Pin, Male	
8D	4460466	2	Plug, Terminal	
9	1001258691	1	Access Control Keypad Harness	
9A	1001192401	1	Dustcap	
9B	4460884	1	Plug, Male - 4 Position	
9B	4460465	4	Socket, Female	
9C	4460932	1	Receptacle, Female - 4 Position	
9C	4460464	4	Pin, Male	
9D	1001210079	1	Plug, Male - 4 Position	
9D	4460465	2	Socket, Female	
9D	4460944	2	Socket, Female	
9E	1001116812	1	Plug, Male - 3 Position	
9E	4460944	2	Socket, Female	
9E	4460466	1	Plug, Terminal	

FIGURE 2-7. MOBILE CONTROL INSTALLATION

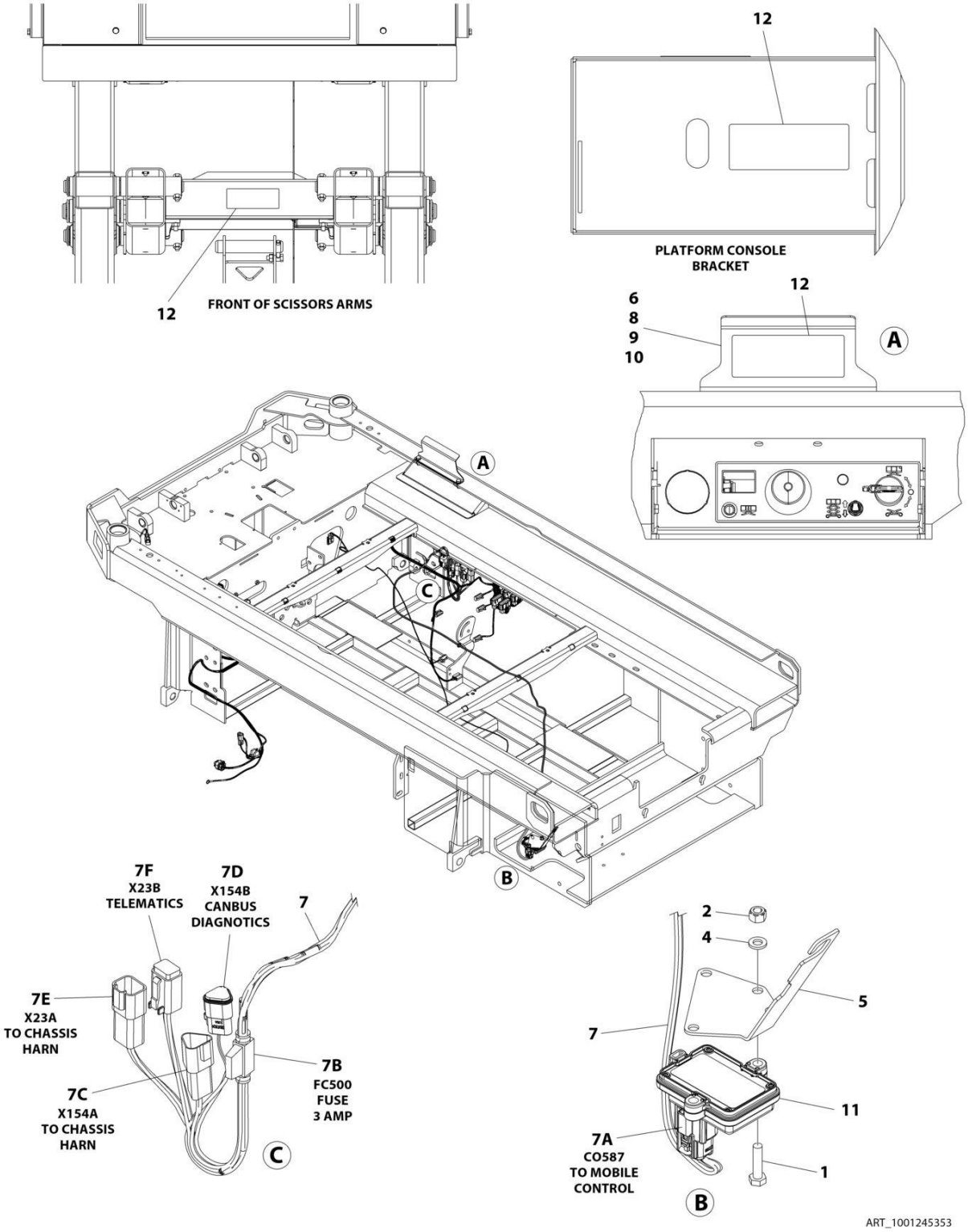

FIGURE 2-7. MOBILE CONTROL INSTALLATION

ITEM	PART NUMBER	QTY	DESCRIPTION	REV
	1001245353	Ref	MOBILE CONTROL INSTALLATION	C
1	0700612	2	Bolt M6 x 25	
2	3290605	2	Nut M6	
3	4240017	AR	Tie-Strap (Not Shown)	
4	4811700	2	Washer M6	
5	1001244394	1	Bracket, Module	
6	1001244885	1	Plate, Decal	
7	1001245299	1	Mobile Control Harness	
7A	1001205409	1	Connector - 8 Position	
7A	1001162887	4	Terminal	
7A	1001163340	4	Plug, Terminal	
7B	2400060	1	Fuseholder with Cap	
7B	1001196635	1	Fuse 3 Amp	
7C	1001144147	1	Receptacle, Female - 3 Position	
7C	4460943	2	Pin, Male	
7C	4460466	1	Plug, Terminal	
7D	1001116812	1	Plug, Male - 3 Position	
7D	4460944	2	Socket, Female	
7D	4460466	1	Plug, Terminal	
7E	4460932	1	Receptacle, Female - 4 Position	
7E	4460464	4	Pin, Terminal	
7F	4460884	1	Pin, Male	
7F	4460465	4	Socket, Female	
8	0760810	2	Bolt M8 x 20	
9	4811900	2	Washer M8	
10	1001118274	2	Nut Tinnerman M8	
11	1001245293	1	Control, Mobile	
12	1001248768	3	Decal, Mobile Control	
13	3121792	1	Manual, Mobile Control (Not Shown)	

FIGURE 2-8. MDI INSTALLATION

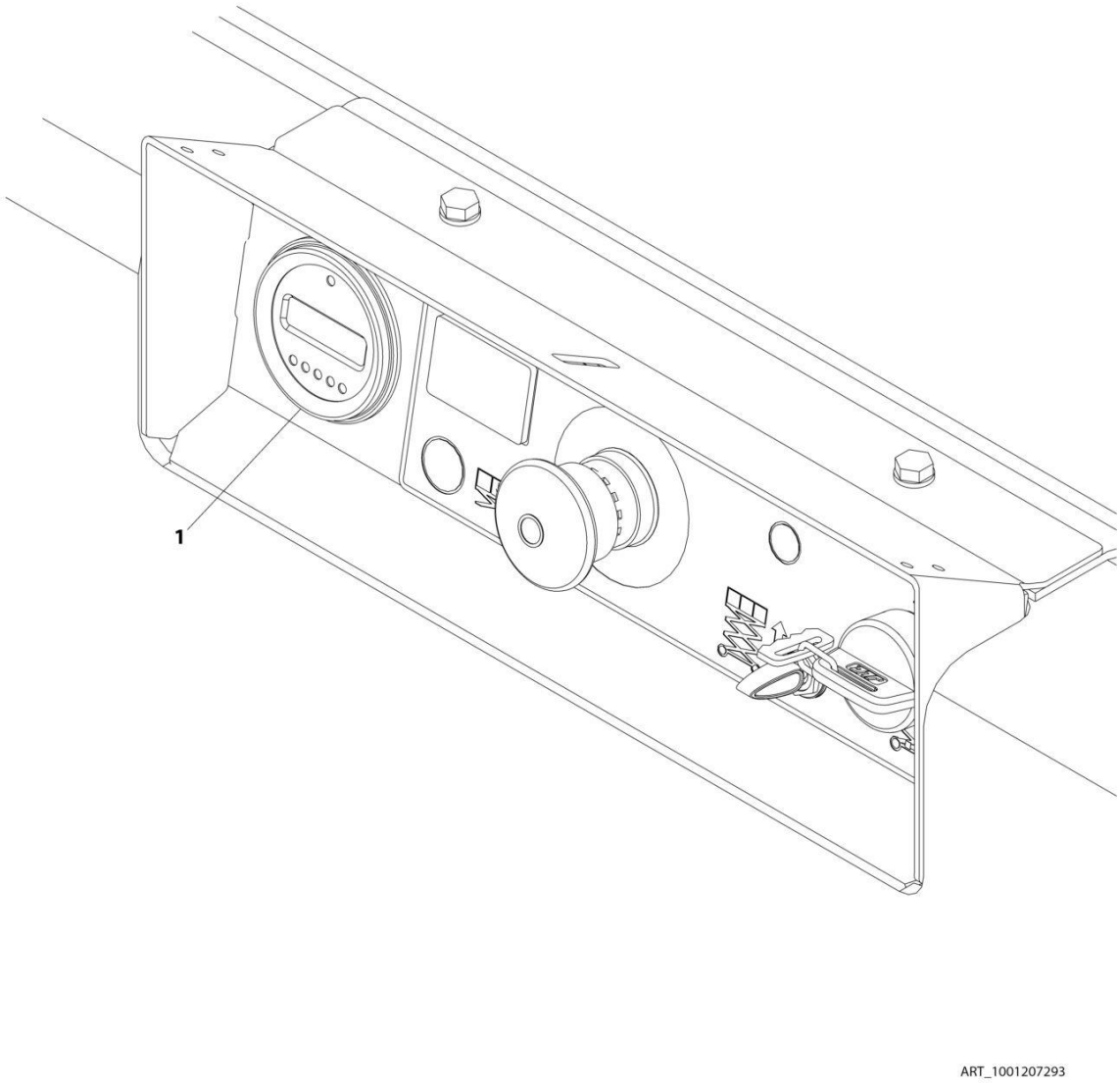

FIGURE 2-8. MDI INSTALLATION

ITEM	PART NUMBER	QTY	DESCRIPTION	REV
	1001207293	Ref	MDI INSTALLATION	B
1	1001200632	1	Gauge, MDI	

FIGURE 2-9. BATTERIES INSTALLATION - STANDARD 6V-250AH

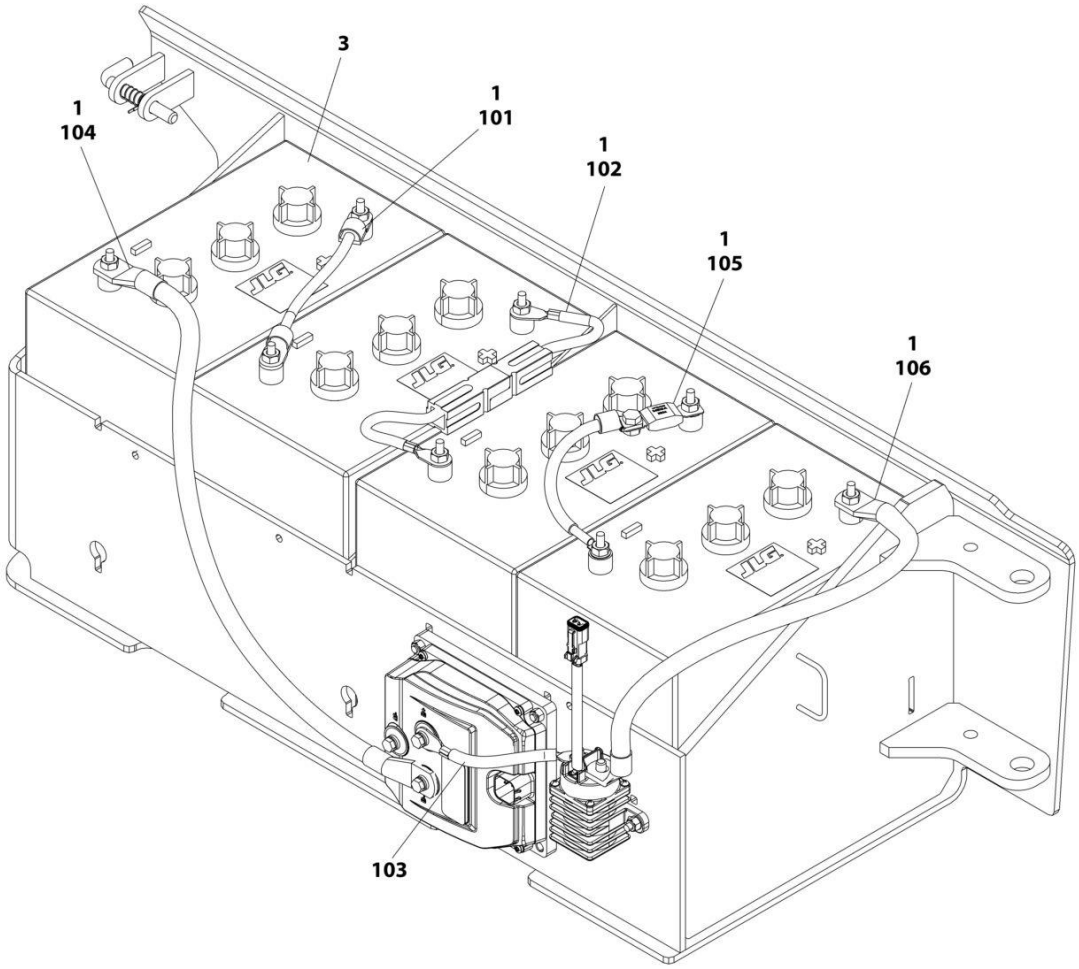

FIGURE 2-9. BATTERIES INSTALLATION - STANDARD 6V-250AH

ITEM	PART NUMBER	QTY	DESCRIPTION	REV
	1001235834	Ref	BATTERIES INSTALLATION	A
1	0100051	AR	Grease, Terminal	
2	4240017	AR	Tie-Strap (Not Shown)	
3	1001235106	4	Battery	
100	1001228123	1	Battery Cable Kit (Not Shown)	
101	1060998	1	Cable, Positive to Negative	
102	4923328	1	Cable, Positive to Negative	
103	1001201708	1	Cable, Contactor to Pump Control B+	
104	1001201711	1	Cable, Battery Negative to Pump Control B-	
105	1001210401	1	Cable, Battery Fuse	
106	1001229110	1	Cable, Battery Positive to Contactor	

FIGURE 2-10. BATTERIES INSTALLATION - STANDARD 6V-220AH

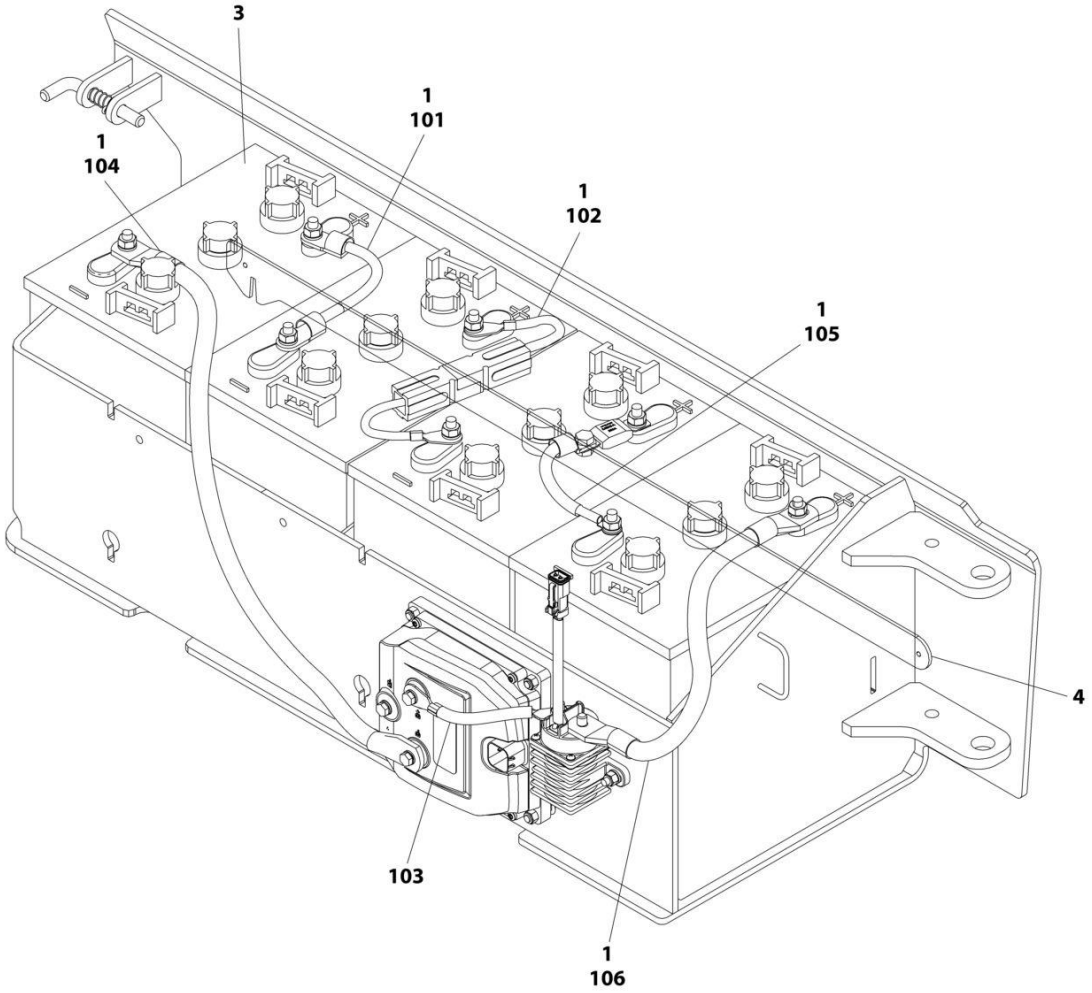

ART_1001236632

FIGURE 2-10. BATTERIES INSTALLATION - STANDARD 6V-220AH

ITEM	PART NUMBER	QTY	DESCRIPTION	REV
	1001236632	Ref	BATTERIES INSTALLATION	B
1	0100051	AR	Grease, Terminal	
2	4240017	AR	Tie-Strap (Not Shown)	
3	1001216180	4	Battery	
4	1001239269	1	Bar	
100	1001228123	1	Battery Cable Kit (Not Shown)	
101	1060998	1	Cable, Positive to Negative	
102	4923328	1	Cable, Positive to Negative	
103	1001201708	1	Cable, Contactor to Pump Control B+	
104	1001201711	1	Cable, Battery Negative to Pump Control B-	
105	1001210401	1	Cable, Battery Fuse	
106	1001229110	1	Cable, Battery Positive to Contactor	

FIGURE 2-11. BATTERIES INSTALLATION - AGM 6V-220AH

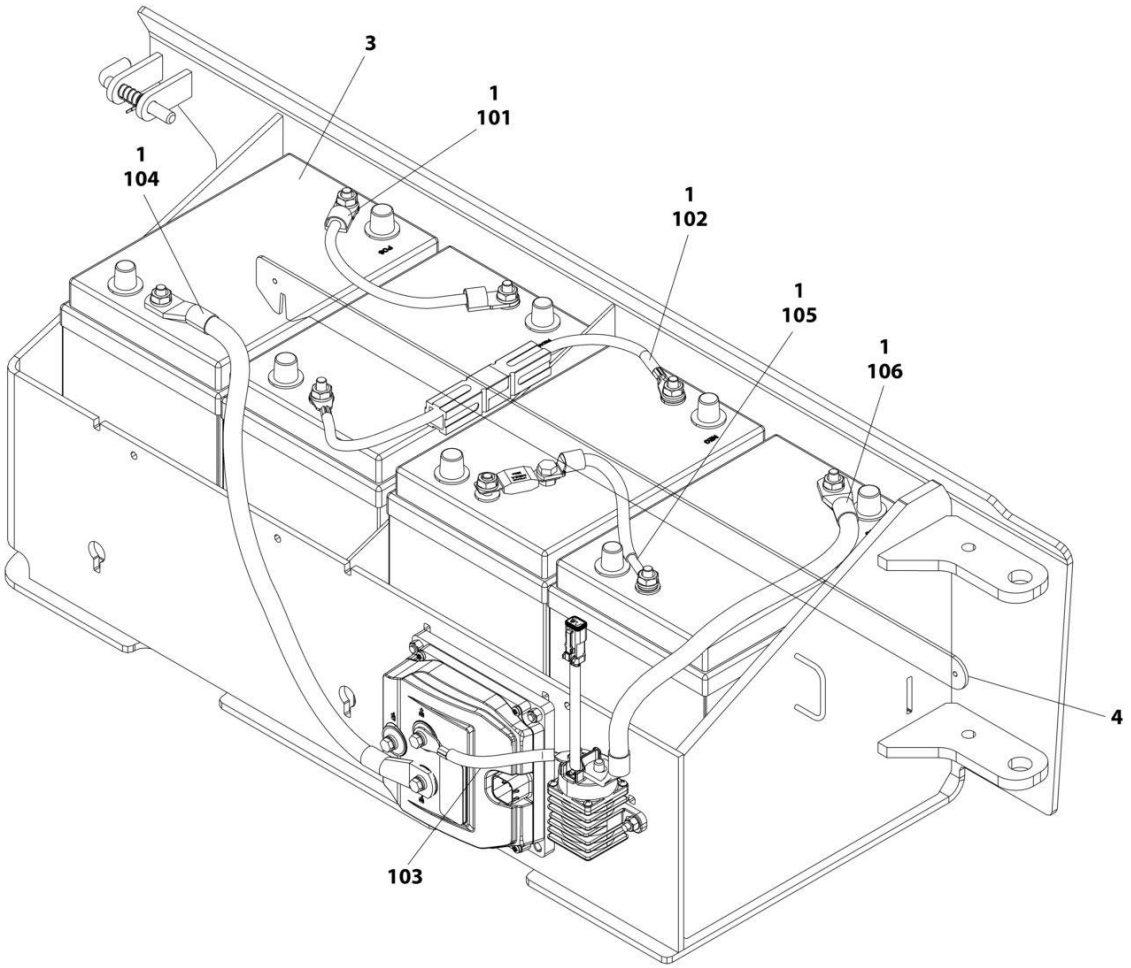

FIGURE 2-11. BATTERIES INSTALLATION - AGM 6V-220AH

ITEM	PART NUMBER	QTY	DESCRIPTION	REV
	1001237989	Ref	BATTERIES INSTALLATION	B
1	0100051	AR	Grease, Terminal	
2	4240017	AR	Tie-Strap (Not Shown)	
3	1001112112	4	Battery	
4	1001239269	1	Bar	
100	1001228123	1	Battery Cable Kit (Not Shown)	
101	1060998	1	Cable, Positive to Negative	
102	4923328	1	Cable, Positive to Negative	
103	1001201708	1	Cable, Contactor to Pump Control B+	
104	1001201711	1	Cable, Battery Negative to Pump Control B-	
105	1001210401	1	Cable, Battery Fuse	
106	1001229110	1	Cable, Battery Positive to Contactor	

FIGURE 2-12. BATTERIES INSTALLATION - AGM EVCG 6V-220AH

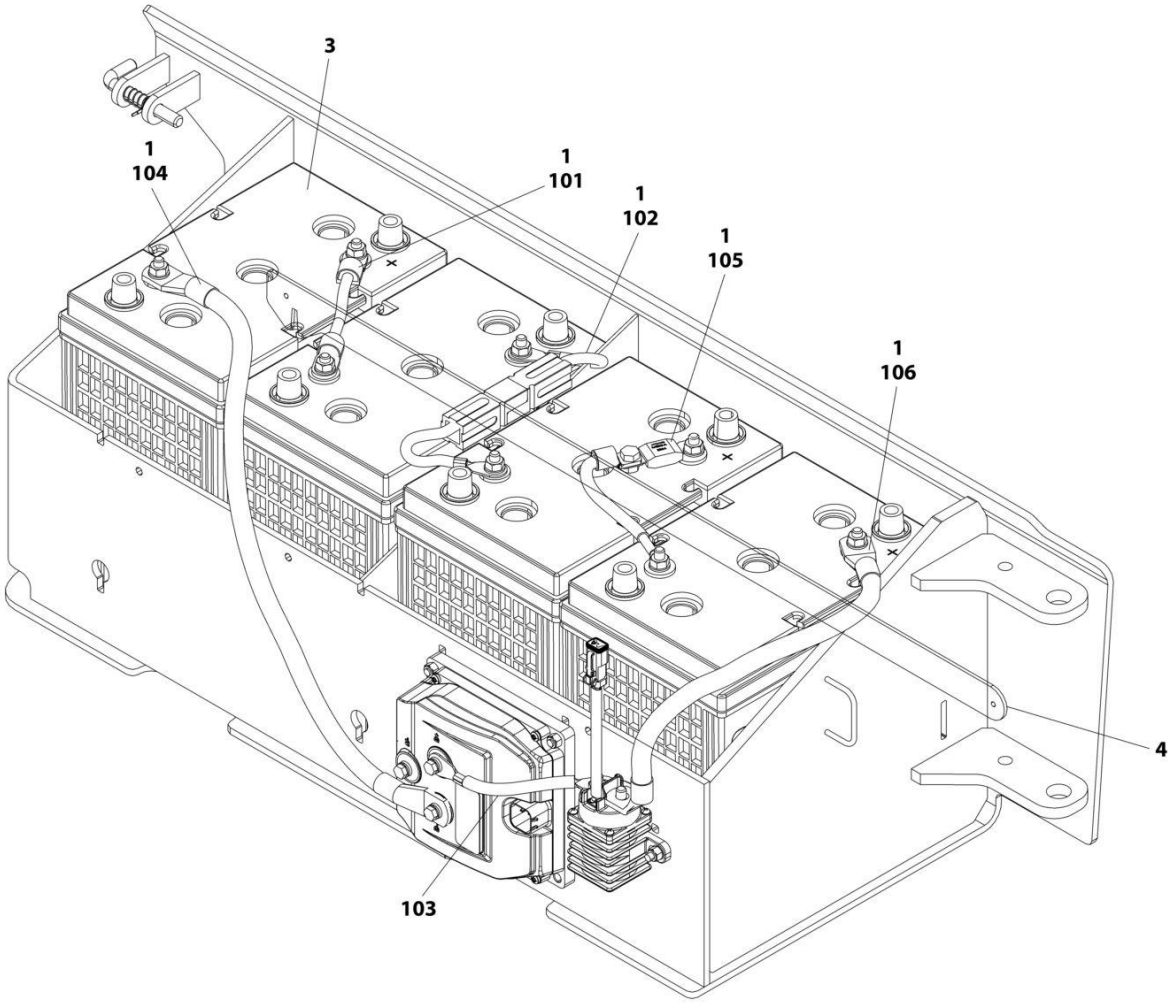

ART_1001237991

FIGURE 2-12. BATTERIES INSTALLATION - AGM EVCG 6V-220AH

ITEM	PART NUMBER	QTY	DESCRIPTION	REV
	1001237991	Ref	BATTERIES INSTALLATION	B
1	0100051	AR	Grease, Terminal	
2	4240017	AR	Tie-Strap (Not Shown)	
3	1001214347	4	Battery	
4	1001239269	1	Bar	
100	1001228123	1	Battery Cable Kit (Not Shown)	
101	1060998	1	Cable, Positive to Negative	
102	4923328	1	Cable, Positive to Negative	
103	1001201708	1	Cable, Contactor to Pump Control B+	
104	1001201711	1	Cable, Battery Negative to Pump Control B-	
105	1001210401	1	Cable, Battery Fuse	
106	1001229110	1	Cable, Battery Positive to Contactor	

FIGURE 2-13. BATTERIES INSTALLATION - 6V-220AH (TROJAN)

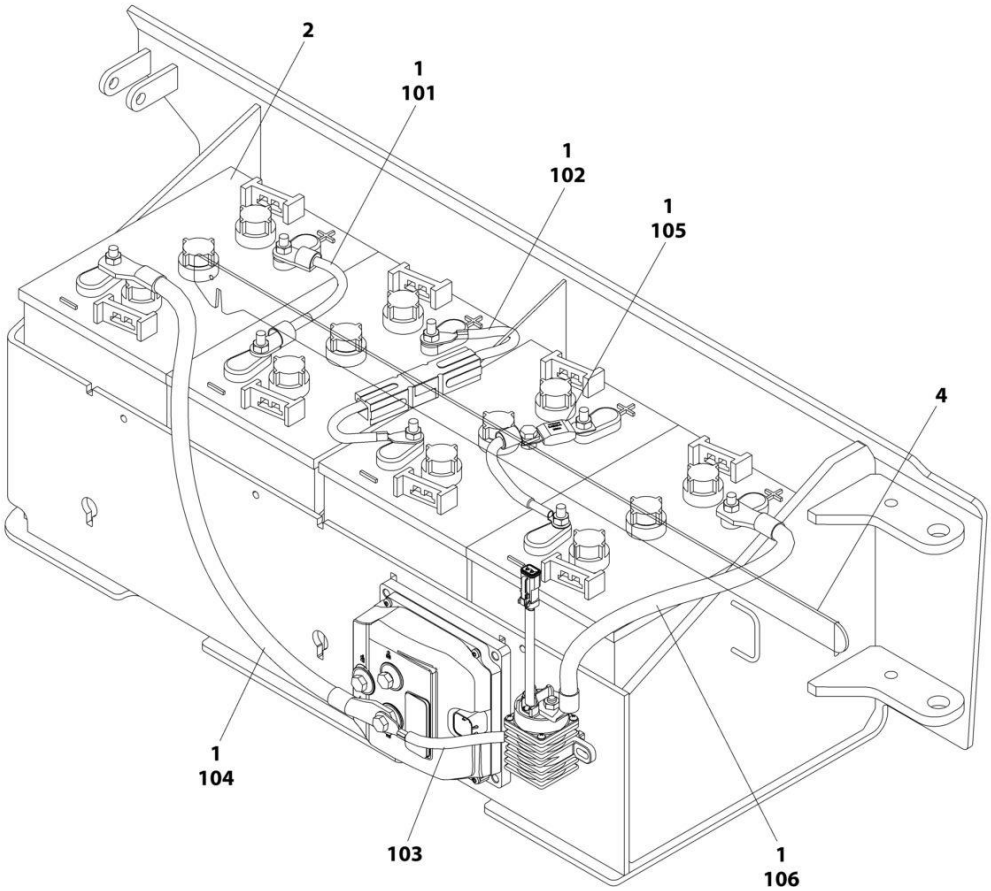

ART_1001249054

FIGURE 2-13. BATTERIES INSTALLATION - 6V-220AH (TROJAN)

ITEM	PART NUMBER	QTY	DESCRIPTION	REV
	1001249054	Ref	BATTERIES INSTALLATION	B
1	0100051	AR	Grease, Terminal	
2	1001258498	4	Battery	
3	4240017	AR	Tie-Strap (Not Shown)	
4	1001239269	1	Bar	
100	1001228123	1	Battery Cable Kit (Not Shown)	
101	1060998	1	Cable, Positive to Negative	
102	4923328	1	Cable, Positive to Negative	
103	1001201708	1	Cable, Contactor to Pump Control B+	
104	1001201711	1	Cable, Battery Negative to Pump Control B-	
105	1001210401	1	Cable, Battery Fuse	
106	1001229110	1	Cable, Battery Positive to Contactor	

FIGURE 2-14. INVERTER INSTALLATION (OPTIONAL)

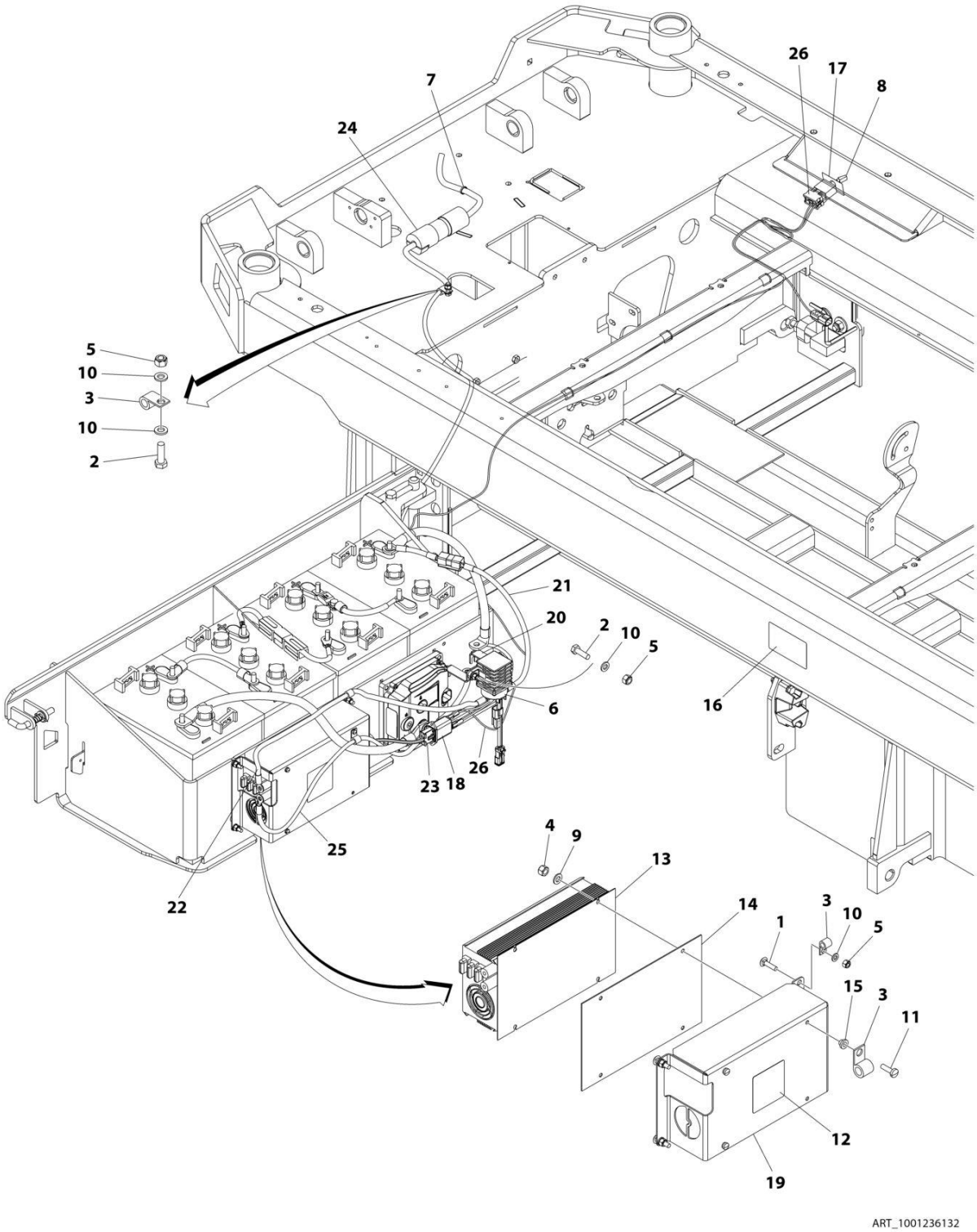

FIGURE 2-14. INVERTER INSTALLATION (OPTIONAL)

ITEM	PART NUMBER	QTY	DESCRIPTION	REV
	1001236132	Ref	INVERTER INSTALLATION (OPTIONAL)	B
1	0630587	4	Bolt M6 x 25	
2	0760610	3	Bolt M6 x 20	
3	1321293	3	Clamp	
4	3290405	3	Nut M4	
5	3290605	7	Nut M6	
6	3740150	1	Relay	
7	4240017	AR	Tie-Strap	
8	4360336	1	Switch, Toggle	
9	4811400	3	Washer M4	
10	4811700	8	Washer M6	
11	1001101540	3	Screw M4 x 14	
12	1001125483	1	Decal - Pressure Wash	
13	1001136757	1	Inverter	
14	1001142173	1	Insulate	
15	1001142174	3	Washer 1/8	
16	1001143009	1	Decal - Inverter	
17	1001143010	1	Decal - On/Off Inverter	
18	1001157547	1	Filter, AC	
19	1001210440	1	Support	
20	1001210605	1	Support	
21	1001210878	1	Cable, Battery + to Inverter Contactor	
22	1001210879	1	Cable, Inverter Contactor to Inverter +	
23	1001210881	1	Cable, Inverter to AC Filter	
24	1001210882	1	Cable, AC Filter to AC Plug	
25	1001210967	1	Cable, Pump Control B- to Inverter	
26	1001235954	1	Inverter Harness	
26	4460897	2	Receptacle, Female - 2 Position	
26	4460464	3	Pin, Male	
26	4460466	1	Plug, Terminal	
26	4460418	1	Plug, Male - 6 Position	
26	4460419	2	Terminal	

FIGURE 2-15. DOORS INSTALLATION

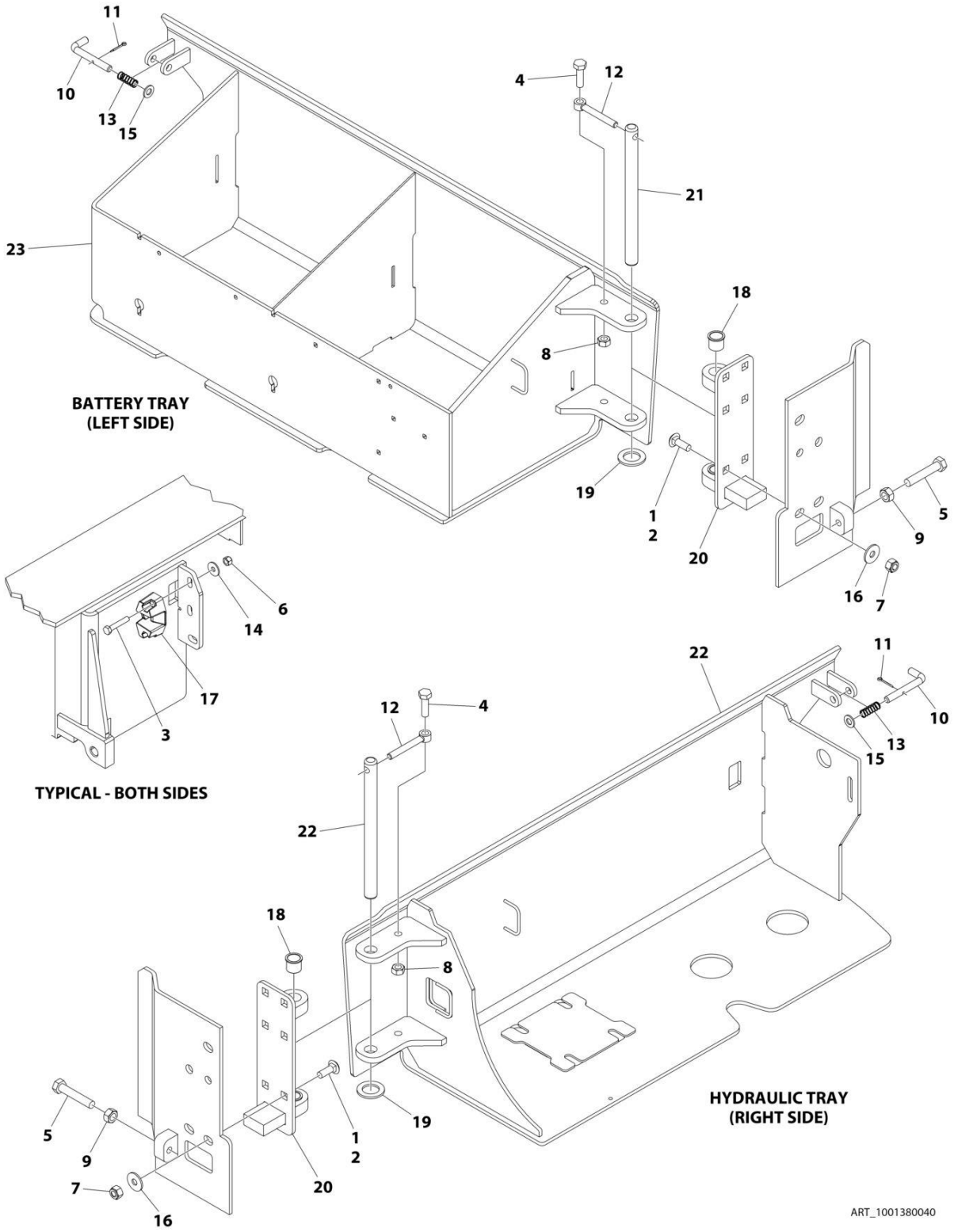

FIGURE 2-15. DOORS INSTALLATION

ITEM	PART NUMBER	QTY	DESCRIPTION	REV
	1001380040	Ref	DOORS INSTALLATION	B
1	0100011	AR	Compound, Locking	
2	0630613	10	Bolt M10 x 30	
3	0700817	4	Bolt M8 x 45	
4	0701015	2	Bolt M10 x 35	
5	0761221	2	Bolt M12 x 65	
6	3290805	4	Nut M8	
7	3291005	10	Nut M10	
8	3291007	2	Nut M10	
9	3291201	2	Nut M12	
10	3423243	2	Pin	
11	3450303	2	Pin, Cotter 3/32 x 3/4	
12	3841143	2	Keeper, Pin	
13	4160214	2	Spring	
14	4811902	4	Washer M8	
15	4812000	AR	Washer M10	
16	4812002	10	Washer M10	
17	1001214810	2	Support	
18	1001218573	4	Bearing	
19	1001229792	2	Washer	
20	1001234858	2	Hinge	
21	1001234862	2	Pin	
22	1001380041	1	Tray, Hydraulic	
23	1001380042	1	Tray, Battery	

SECTION 3 - SCISSORS ARMS

FIGURE 3-1. SCISSORS ARMS INSTALLATION

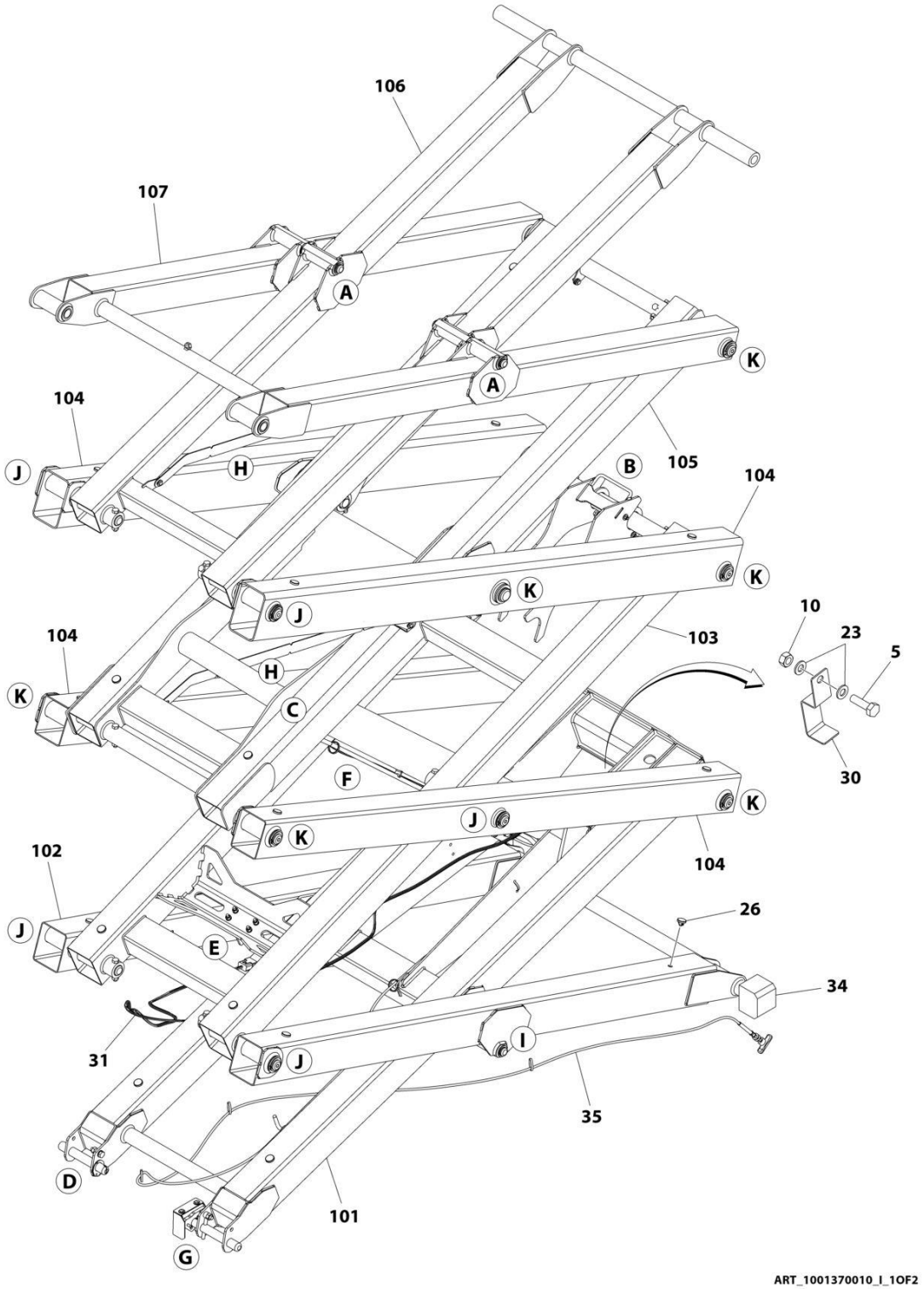

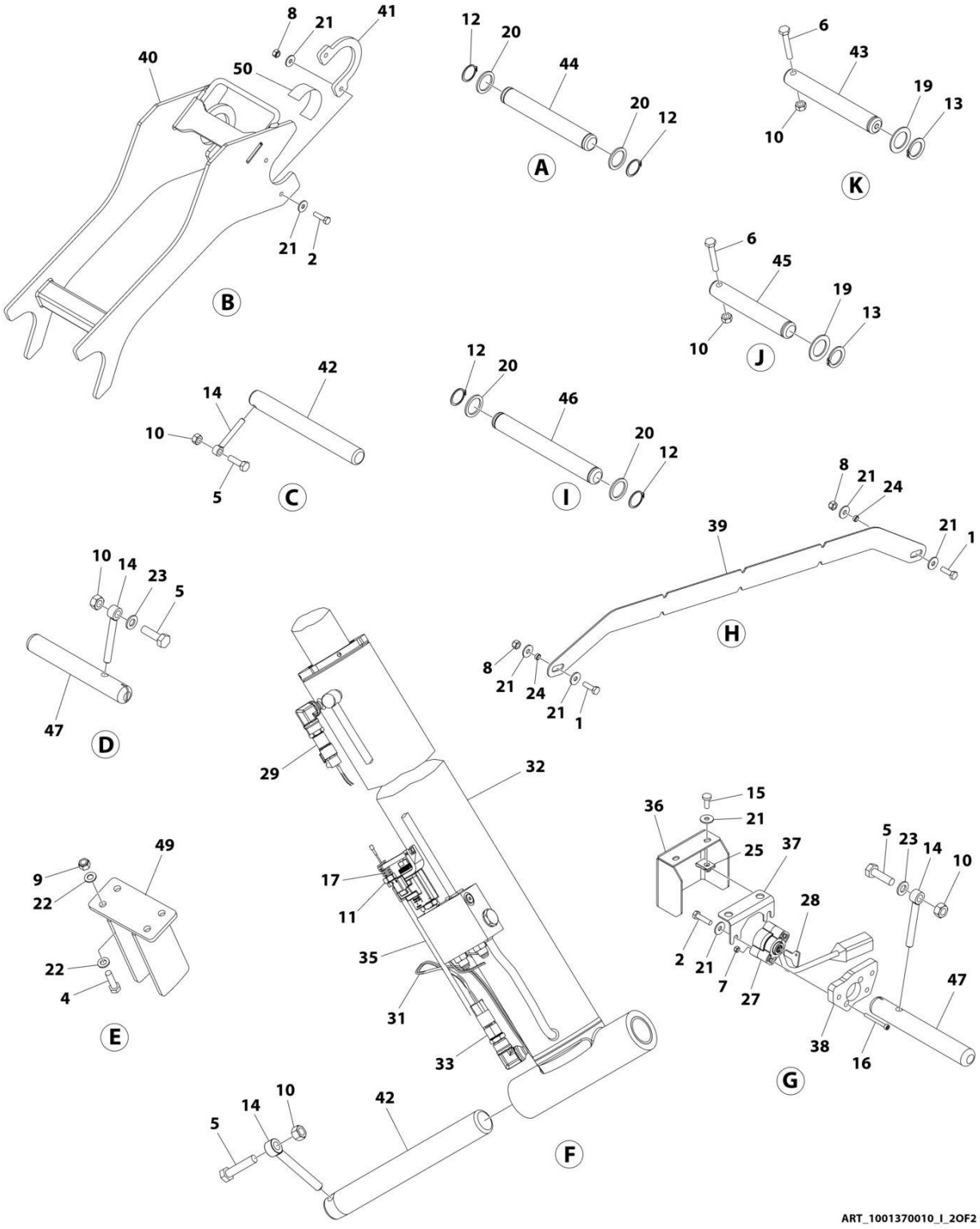
8
21
41
40
50
21
2
B
12
20
44
20
12
A
6
43
19
13
10
K
6
45
19
13
10
J
12
20
46
20
12
I
42
14
10
5
C
8
21
24
39
21
1
H
10
14
23
5
47
D
8
21
24
21
1
29
32
15
36
21
25
37
5
23
14
10
49
9
22
17
11
28
22
4
35
2
21
7
27
47
E
31
33
38
16
G
10
14
5
42
F
ART_1001370010_I_2OF2

FIGURE 3-1. SCISSORS ARMS INSTALLATION

ITEM	PART NUMBER	QTY	DESCRIPTION	REV
	1001370010	Ref	SCISSORS ARMS INSTALLATION	I
1	0700610	4	Bolt M6 x 20	
2	0700612	7	Bolt M6 x 25	
4	0700814	4	Bolt M8 x 30	
5	0701015	5	Bolt M10 x 35	
6	0701021	16	Bolt M10 x 65	
7	3290405	2	Nut M4	
8	3290605	8	Nut M6	
9	3290805	4	Nut M8	
10	3291007	21	Nut M10	
11	3321402	1	Nut 1/4	
12	3760115	8	Ring, Retaining	
13	3760387	16	Ring, Retaining	
14	3841143	4	Keeper, Pin	
15	4010608	2	Screw M6 x 16	
16	4031512	2	Capscrew M4 x 40	
17	4160078	1	Spring	
18	4240017	AR	Tie-Strap (Not Shown)	
19	4740438	16	Washer	
20	4740531	8	Washer	
21	4811702	21	Washer M6	
22	4811900	8	Washer M8	
23	4812000	4	Washer M10	
24	1001128888	4	Washer	
25	1001130220	2	Nut Tinnerman M6	
26	1001137675	24	Bumper	
27	1001146963	1	Sensor, Angle	
28	1001205345	1	Key (Steel)	
28	1001234204	1	Key (Aluminun)	
29	1001225164	1	Sensor, Pressure Transducer	
30	1001226791	1	Bracket, Cable	
31	1001233795	1	Lift Down Harness (See Separate Breakdown in ELECTRICAL Section)	
32	1001244416	1	Lift Cylinder Assembly (See Separate Breakdown in CYLINDER Section)	
33	1001235104	1	Sensor, Pressure Transducer	
34	1001247707	2	Block, Side	
35	1001236269	1	Cable, Manual Descent	
36	1001236486	1	Cover	
37	1001236487	1	Plate	
38	1001236488	1	Plate	
39	1001237824	2	Plate	
40	1001238684	1	Arm, Prop	
41	1001239479	2	Plate	
42	1001239925	2	Pin	
43	1001239927	10	Pin	
44	1001239928	2	Pin	
45	1001239929	6	Pin	
46	1001239930	2	Pin	
47	1001239931	2	Pin	

ITEM	PART NUMBER	QTY	DESCRIPTION	REV
49	1001246674	1	Adapter	
50	4420062	15 in/ 37cm	Tape	
100	1001241744	1	Arm Kit	
101	1001241737	1	Arm - Inner 1	
101	0440264	4	Bearing (Not Shown)	
102	1001241738	1	Arm - Outer 2	
102	0440264	4	Bearing - 1 ID (Not Shown)	
102	0440265	4	Bearing - 1-1/4 ID (Not Shown)	
103	1001241739	1	Arm - Inner 2	
104	1001241740	2	Arm - Outer 2 and Outer 3	
104	0440265	6	Bearing (Not Shown)	
105	1001241741	1	Arm - Inner 3	
106	1001241742	1	Arm - Inner 4	
106	0440264	4	Bearing (Not Shown)	
107	1001241743	1	Arm - Outer 4	
107	0440264	8	Bearing - 1 ID (Not Shown)	
107	0440265	4	Bearing - 1-1/4 ID (Not Shown)	
201	0440264	4	Bearing (Part of Frame) (Not Shown)	

FIGURE 3-2. ARM GUARDS INSTALLATION

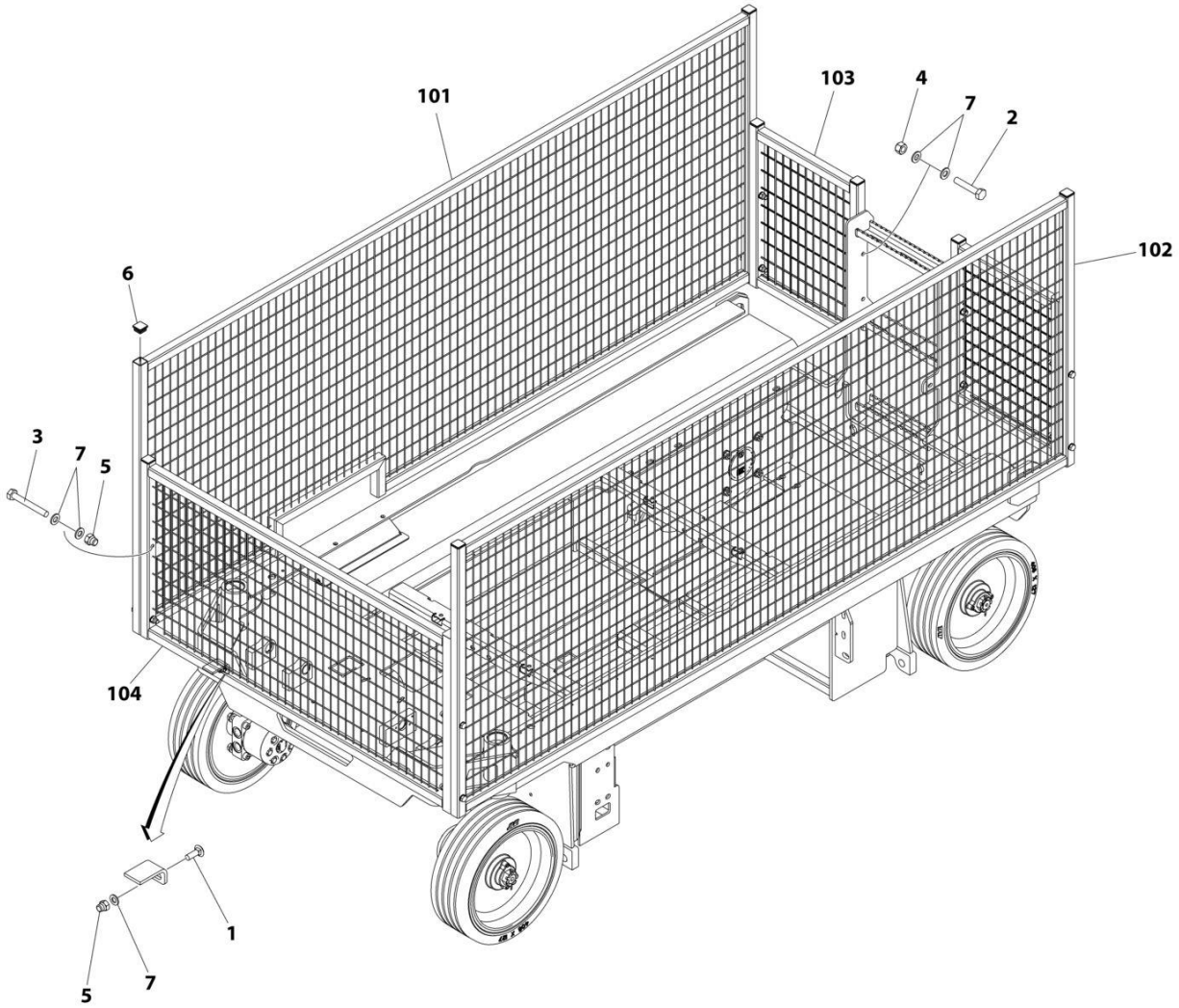

FIGURE 3-2. ARM GUARDS INSTALLATION

ITEM	PART NUMBER	QTY	DESCRIPTION	REV
	1001239674	Ref	ARM GUARD INSTALLATION	A
1	0630613	2	Bolt M10 x 30	
2	0701019	4	Bolt M10 x 55	
3	0701024	8	Bolt M10 x 80	
4	3291005	4	Nut M10	
5	3291006	10	Nut M10	
6	3520072	10	Plug	
7	4812000	26	Washer M10	
100	1001241352	1	Arm Guard Kit (Not Shown)	
101	1001239892	1	Guard, Arm (RH)	
102	1001239894	1	Guard, Arm (LH)	
103	1001241353	2	Guard, Arm (Rear)	
104	1001241358	1	Guard, Arm (Front)	

SECTION 4 - PLATFORM

FIGURE 4-1. PLATFORM INSTALLATION

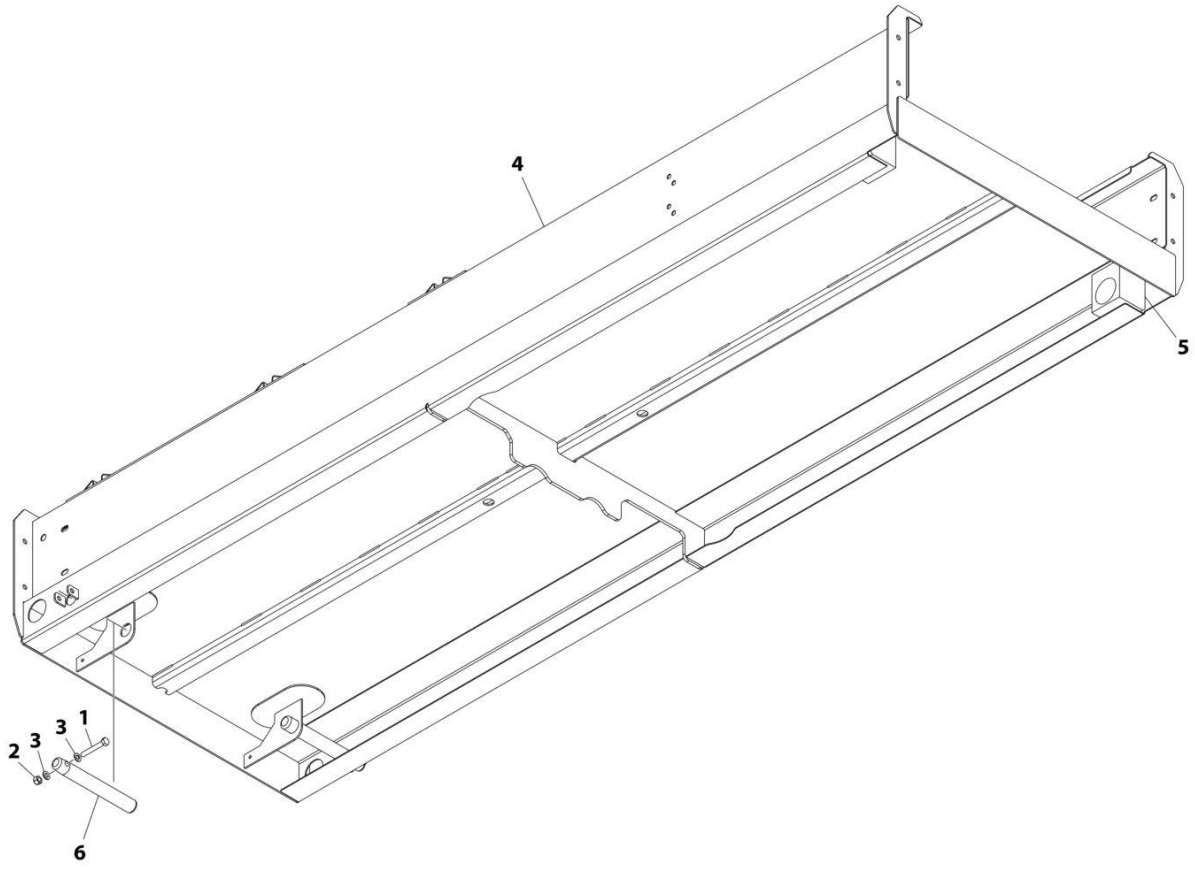

ART_1001234384_B

FIGURE 4-1. PLATFORM INSTALLATION

ITEM	PART NUMBER	QTY	DESCRIPTION	REV
	1001234384	Ref	PLATFORM INSTALLATION	B
1	0700819	2	Bolt M8 x 55	
2	3290805	2	Nut M8	
3	4811900	4	Washer M8	
4	1001235555	1	Platform	
5	1001247706	2	Block, Slide	
6	1001239926	2	Pin	

FIGURE 4-2. PLATFORM EXTENSION INSTALLATION

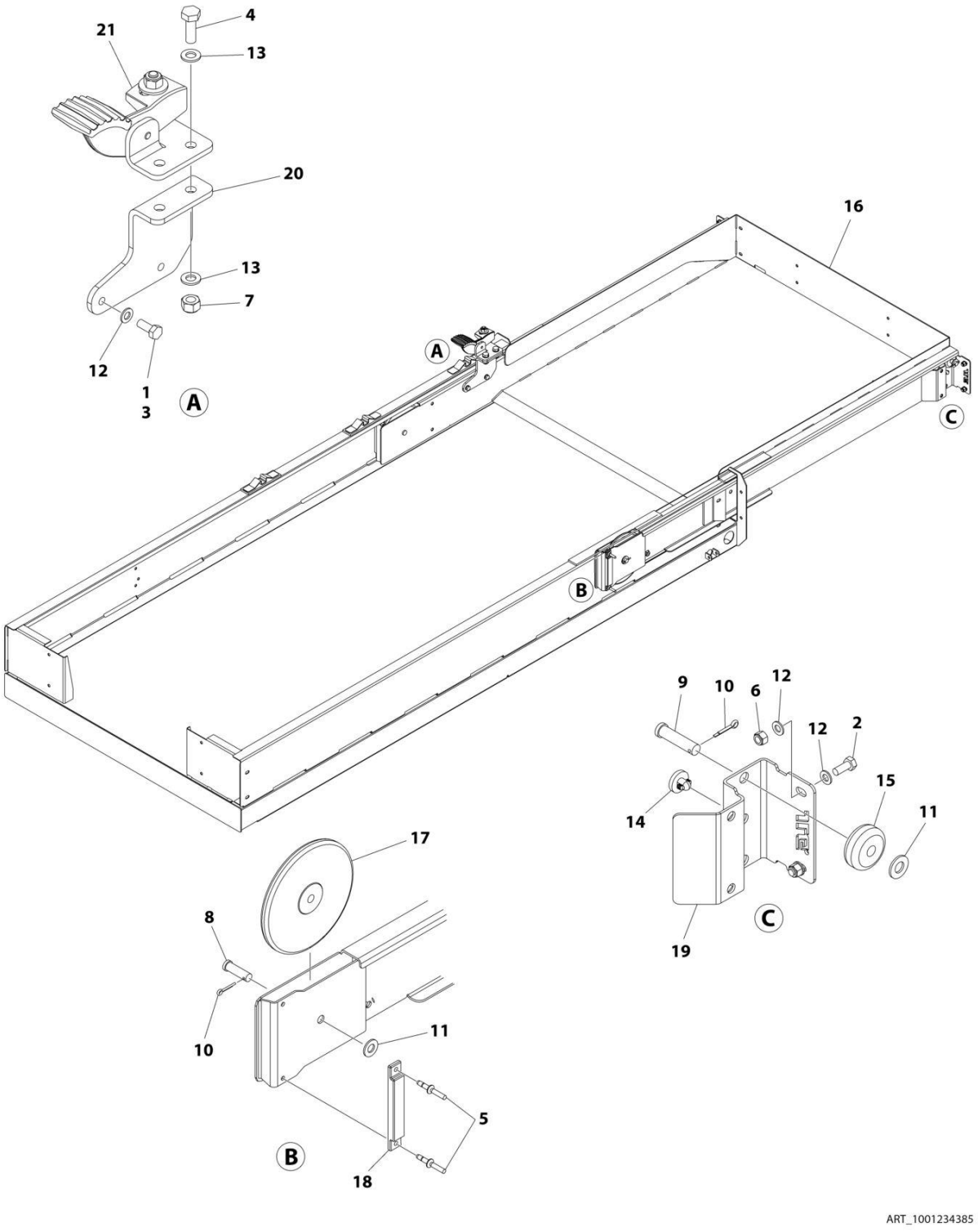

FIGURE 4-2. PLATFORM EXTENSION INSTALLATION

ITEM	PART NUMBER	QTY	DESCRIPTION	REV
	1001234385	Ref	PLATFORM EXTENSION INSTALLATION	A
1	0100011	AR	Compound, Locking	
2	0760810	4	Bolt M8 x 20	
3	0760812	2	Bolt, M8 x 25	
4	0761014	2	Bolt M10 x 30	
5	2080040	4	Fastener	
6	3290805	4	Nut M8	
7	3291005	2	Nut M10	
8	3430814	2	Pin	
9	3430816	2	Pin	
10	3450403	4	Pin, Cotter	
11	4711800	4	Washer 1/2	
12	4811900	10	Washer M8	
13	4812000	4	Washer M10	
14	1001137675	2	Bumper	
15	1001205422	2	Roller (Front)	
16	1001205424	1	Extension, Platform	
17	1001205430	2	Roller (Rear)	
18	1001208852	2	Pad	
19	1001210064	2	Support	
20	1001213838	1	Bracket	
21	1001234407	1	Latch Assembly	

FIGURE 4-3. RAILS INSTALLATION (SIDE BY SIDE)

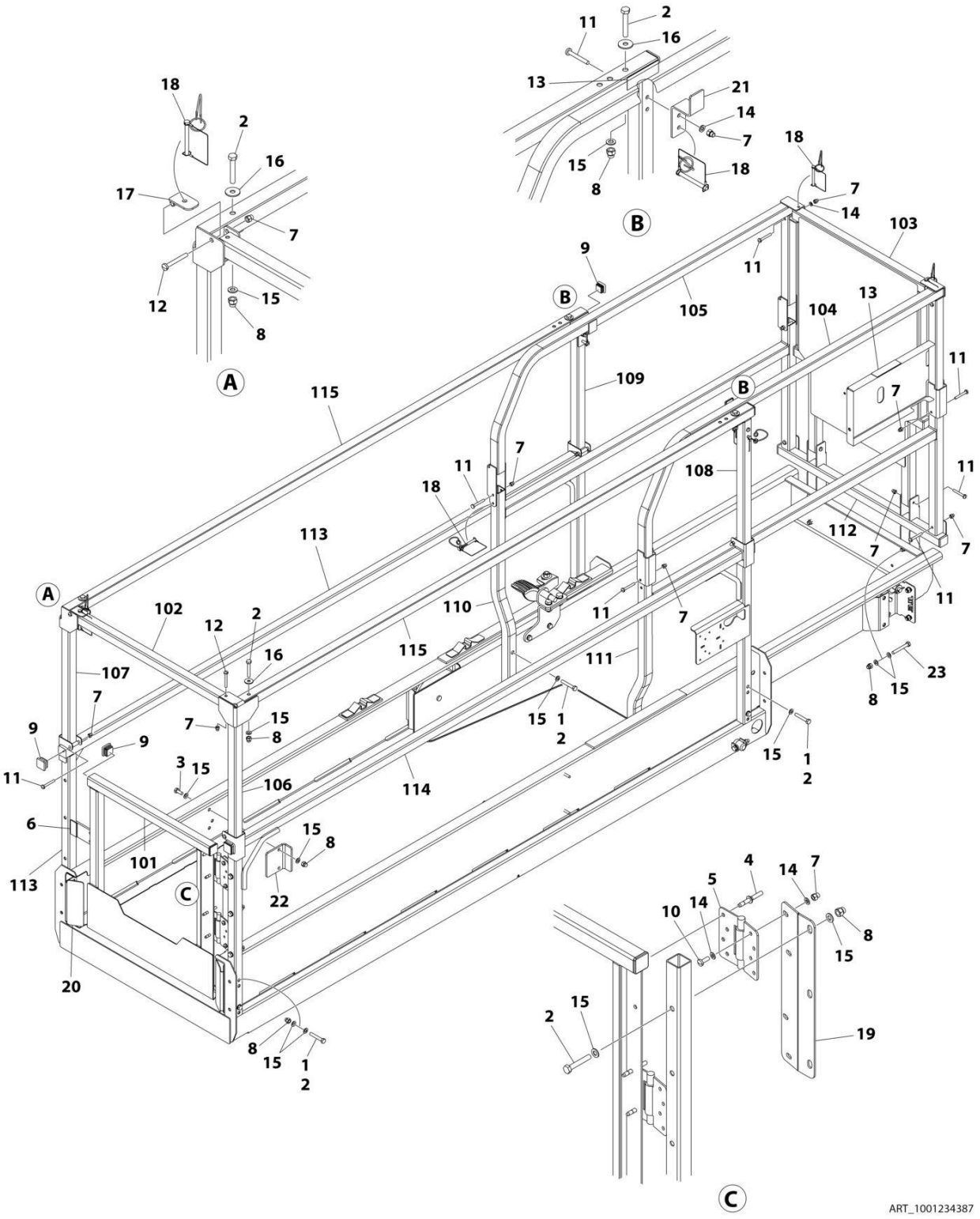

FIGURE 4-3. RAILS INSTALLATION (SIDE BY SIDE)

ITEM	PART NUMBER	QTY	DESCRIPTION	REV
	1001234387	Ref	RAILS INSTALLATION (SIDE BY SIDE)	F
1	0100011	AR	Compound, Locking	
2	0700818	19	Bolt M8 x 50	
3	0760810	2	Bolt M8 x 20	
4	2080040	4	Fastener	
5	2600281	2	Hinge	
6	3080007	1	Magnet, Gate	
7	3290606	22	Nut M6	
8	3290806	17	Nut M8	
9	3520072	12	Plug	
10	4010608	4	Screw M6 x 16	
11	4010617	16	Screw M6 x 45	
12	4010618	2	Screw M6 x 50	
13	4420062	15 in/ 37cm	Tape	
14	4811700	12	Washer M6	
15	4811900	42	Washer M8	
16	4811902	4	Washer M8	
17	1001154378	1	Bracket	
18	1001187587	6	Pin, Snap with Lanyard	
19	1001210586	1	Support	
20	1001210963	2	Cover	
21	1001232257	2	Brace	
22	1001232622	1	Bracket	
23	0700820	4	Bolt M8 x 60	
24	1001156186	4	Plug, Hole	
100	1001236624	1	Rail Kit (Not Shown)	
101	1001210302	1	Gate	
102	1001210458	1	Tube, Rear Top	
103	1001229732	1	Rail, Extension Front (Upper)	
104	1001229733	1	Rail, Extension Side (RH)	
105	1001229734	1	Rail, Extension Side (LH)	
106	1001229739	1	Rail Rear (Upper RH)	
107	1001229740	1	Rail Rear (Upper LH)	
108	1001229741	1	Rail Front (Upper RH)	
109	1001229742	1	Rail Front (Upper LH)	
110	1001230248	1	Tube, Rail (Lower LH)	
111	1001230249	1	Tube, Rail (Lower RH)	
112	1001231405	1	Tube, Extension (Lower)	
113	1001234006	1	Rail Rear (Lower LH)	
114	1001234007	1	Rail Rear (Lower RH)	
115	1001235286	2	Rail, Side Top	

FIGURE 4-4. RAILS INSTALLATION (TUBE IN TUBE)

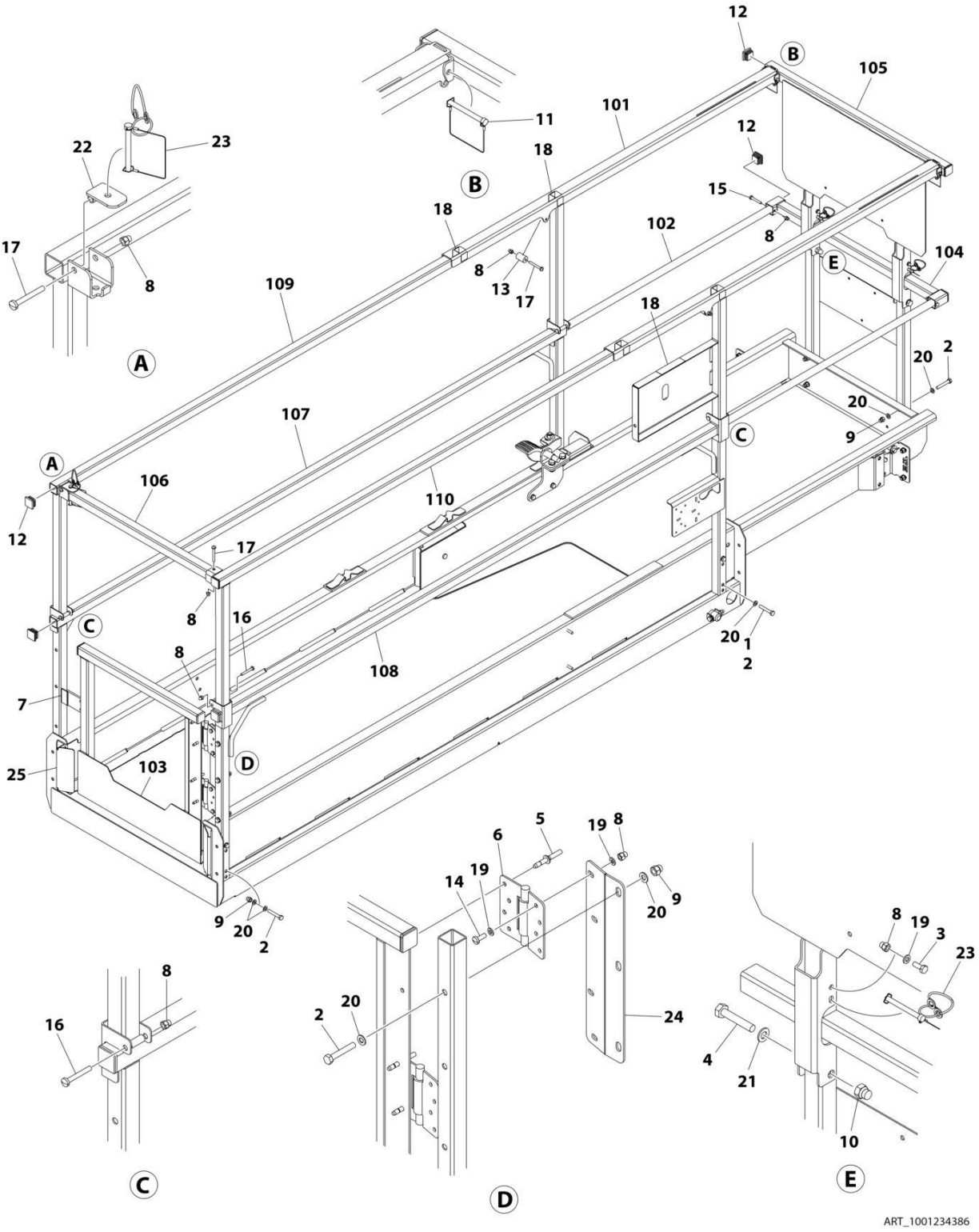

FIGURE 4-4. RAILS INSTALLATION (TUBE IN TUBE)

ITEM	PART NUMBER	QTY	DESCRIPTION	REV
	1001234386	Ref	RAILS INSTALLATION (TUBE IN TUBE)	D
1	0100011	AR	Compound, Locking	
2	0700818	15	Bolt M8 x 50	
3	0760608	2	Bolt M6 x 16	
4	0761019	2	Bolt M10 x 55	
5	2080040	4	Fastener	
6	2600281	2	Hinge	
7	3080007	1	Magnet, Gate	
8	3290606	16	Nut M6	
9	3290806	11	Nut M8	
10	3291006	2	Nut M10	
11	3422219	2	Pin, Snap	
12	3520072	10	Plug	
13	3860111	2	Roller	
14	4010608	4	Screw M6 x 16	
15	4010616	2	Screw M6 x 40	
16	4010617	4	Screw M6 x 45	
17	4010618	4	Screw M6 x 50	
18	4420062	16 in/ 40cm	Tape	
19	4811700	10	Washer M6	
20	4811900	30	Washer M8	
21	4812000	2	Washer M10	
22	1001154378	1	Bracket	
23	1001187587	3	Pin, Snap with Lanyard	
24	1001210586	1	Support	
25	1001210963	2	Cover	
100	1001236623	1	Rail Kit (Not Shown)	
101	1001206225	1	Rail, Extension Top	
102	1001206226	1	Rail, Extension MID	
103	1001210302	1	Gate	
104	1001210446	1	Rail, Extension MID Front	
105	1001210447	1	Rail, Extension Top Front	
106	1001210458	1	Tube, Rear Top	
107	1001234006	1	Rail, Side MID (LH)	
108	1001234007	1	Rail, Side MID (RH)	
109	1001234141	1	Rail, Side Top (LH)	
110	1001234142	1	Rail, Side Top (RH)	

FIGURE 4-5. EXTENSION HANDLES INSTALLATION (OPTIONAL)

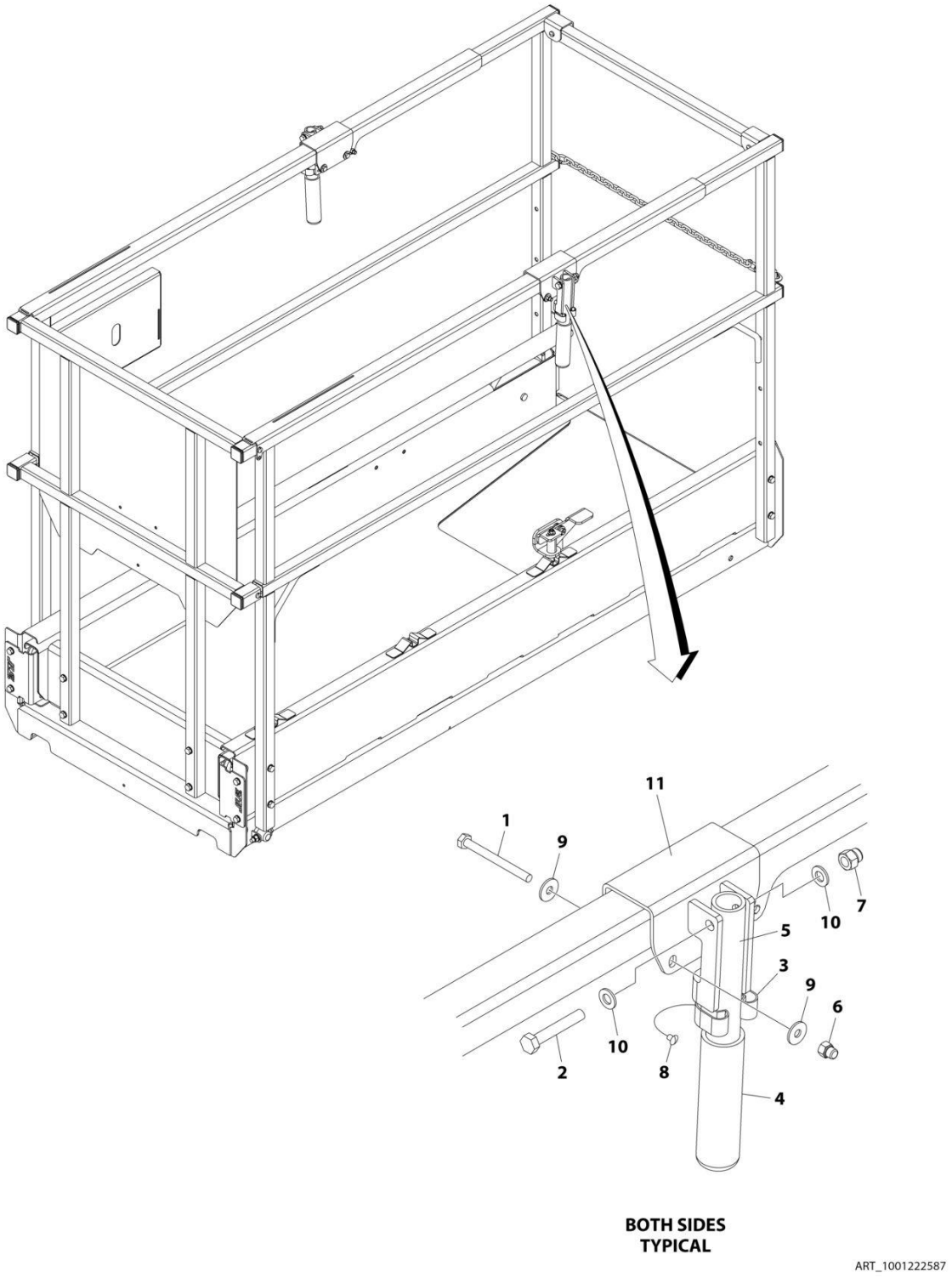

FIGURE 4-5. EXTENSION HANDLES INSTALLATION (OPTIONAL)

ITEM	PART NUMBER	QTY	DESCRIPTION	REV
	1001222587	Ref	HANDLE EXTENSION INSTALLATION (OPTIONAL)	B
1	0700621	4	Bolt M6 x 65	
2	0700818	2	Bolt M8 x 50	
3	1380132	2	Clip	
4	2560088	2	Grip, Handle	
5	2560190	2	Handle	
6	3290606	2	Nut M6	
7	3290806	2	Nut M8	
8	3820019	2	Rivet	
9	4811702	8	Washer M6	
10	4811900	4	Washer M8	
11	1001216823	2	Bracket	

FIGURE 4-6. GATE LATCH INSTALLATION - OPTIONAL

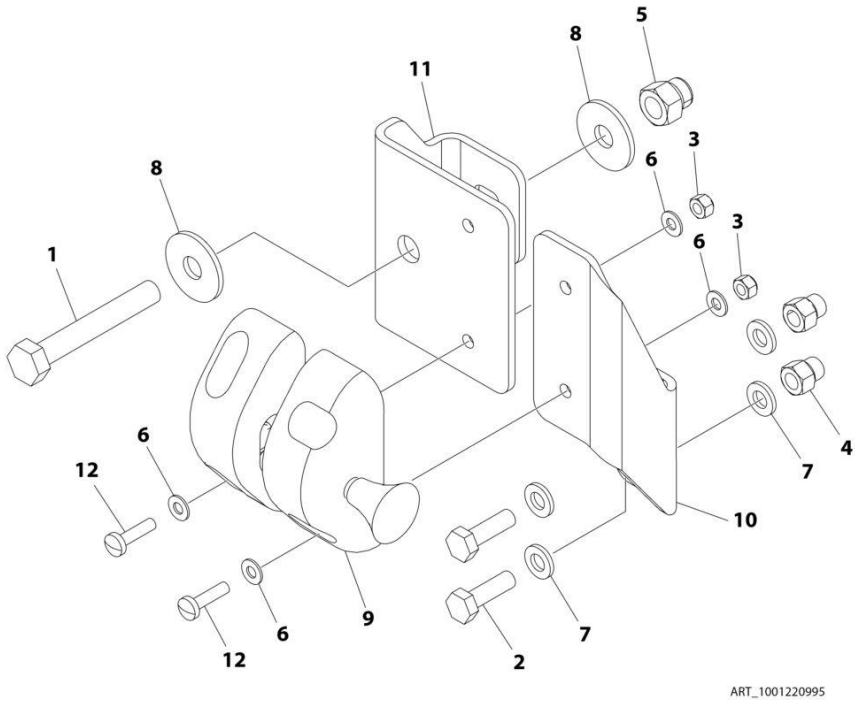

FIGURE 4-6. GATE LATCH INSTALLATION - OPTIONAL

ITEM	PART NUMBER	QTY	DESCRIPTION	REV
	1001220995	Ref	GATE LATCH INSTALLATION	B
1	0700819	1	Bolt M8 x 55	
2	0760610	2	Bolt M6 x 20	
3	3290405	4	Nut M4	
4	3290606	2	Nut M6	
5	3290806	1	Nut M8	
6	4811400	8	Washer M4	
7	4811700	4	Washer M6	
8	4811902	2	Washer M8	
9	1001134821	1	Latch	
10	1001220409	1	Mount	
11	1001220410	1	Plate	
12	4010408	4	Screw M4 x 16	

FIGURE 4-7. PLATFORM CONSOLE INSTALLATION (ALL SPECS)

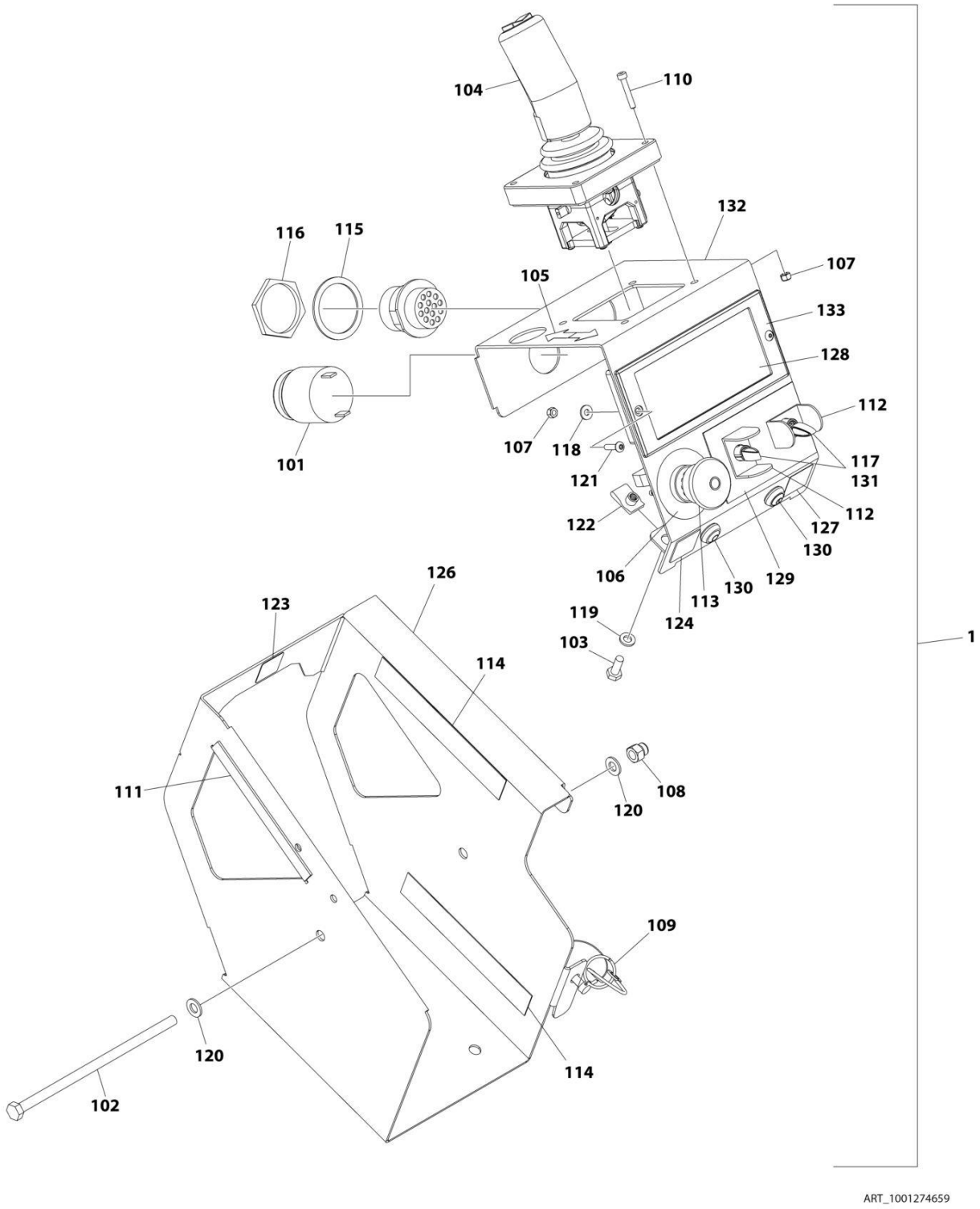

FIGURE 4-7. PLATFORM CONSOLE INSTALLATION (ALL SPECS)

ITEM	PART NUMBER	QTY	DESCRIPTION	REV
	1001274659	Ref	PLATFORM CONTROL INSTALLATION (LED)	A
1	1001274604	1	Platform Control Box	B
101	0140030	1	Alarm	
102	0700835	1	Bolt M8 x 180	
103	0760610	2	Bolt M6 x 20	
104	1600402	1	Controller Assembly (See Separate Breakdown in this Section)	
105	1703819	1	Decal - Arrow	
106	1704260	1	Decal - Emergency Stop	
107	3290405	6	Nut M4	
108	3290806	1	Nut M8	
109	3423278	1	Pin, Snap with Lanyard	
110	4031509	4	Capscrew M4 x 25	
111	4060803	6 in/ 14cm	Flex-Trim	
112	4060906	2	Guard, Switch	
113	4360475	1	Switch, Emergency Stop	
113	7020175	1	Cap	
113	7020176	1	Block, Contact	
114	4420062	12 in/ 30cm	Tape	
115	4460496	1	Washer, Terminal	
116	4460497	1	Nut, Terminal	
117	4711700	2	Washer 7/16	
118	4811400	2	Washer M4	
119	4811700	2	Washer M6	
120	4811900	2	Washer M8	
121	1001047064	2	Screw M4 x 15	
122	1001130220	2	Nut, Tinnerman M6	
123	1001132358	1	Decal - Steer	
124	1001132361	1	Decal - Horn	
125	1001200819	1	Platform Control Box Harness (Not Shown) (See Separate Breakdown in ELECTRICAL Section)	
126	1001209596	1	Plate, Box (Outside)	
127	1001213886	1	Decal - Indoor/Outdoor	
128	1001218285	1	Decal - Platform Control	
129	1001220893	1	Decal - Lift/Drive Function	
130	1001226749	2	Switch, Push Button	
131	1001258446	2	Switch, Toggle	
132	1001262655	1	Plate, Box (Inside)	
133	1001274605	1	Module, Platform Control	

FIGURE 4-8. DRIVE/STEER CONTROLLER ASSEMBLY

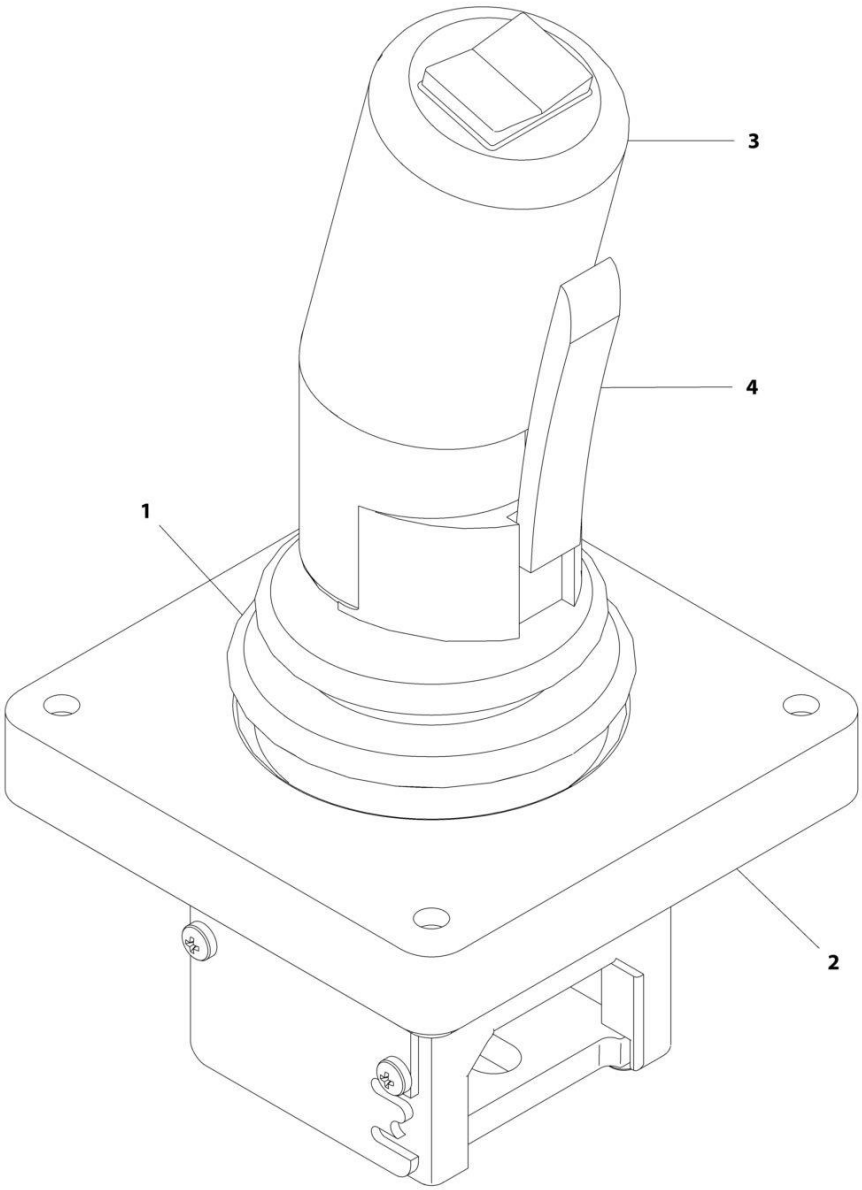

ART_1600402

FIGURE 4-8. DRIVE/STEER CONTROLLER ASSEMBLY

ITEM	PART NUMBER	QTY	DESCRIPTION	REV
	1600402	Ref	DRIVE/STEER CONTROLLER ASSEMBLY	A
1	70001250	1	Boot, Panel	
2	70001252	1	Gasket, Mounting	
2	70001251	1	Bezel, Mounting	
3	70003650	1	Handle Repair Kit (Includes handle gasket, item#4 push button and item #4 lever installed in front handle half, back handle half, top actuator, boot and hardware.)	
3	70000084	1	Cap, Rubber	
3	70000082	1	Microswitch	
3	7027766	1	Ring, Retaining	
3	7027365	1	Actuator, Handle	
3	70001253	1	Gasket, Handle	
3	70000683	4	Washer, Neoprene	
3	70000685	2	Spacer, Plastic	
3	70000686	2	Screw (Top)	
3	70000684	2	Screw (Bottom)	
4	7027367	1	Switch, Push Button	
4	7027765	1	Lever, Enable	

FIGURE 4-9. PIPE RACKS INSTALLATION (OPTIONAL)

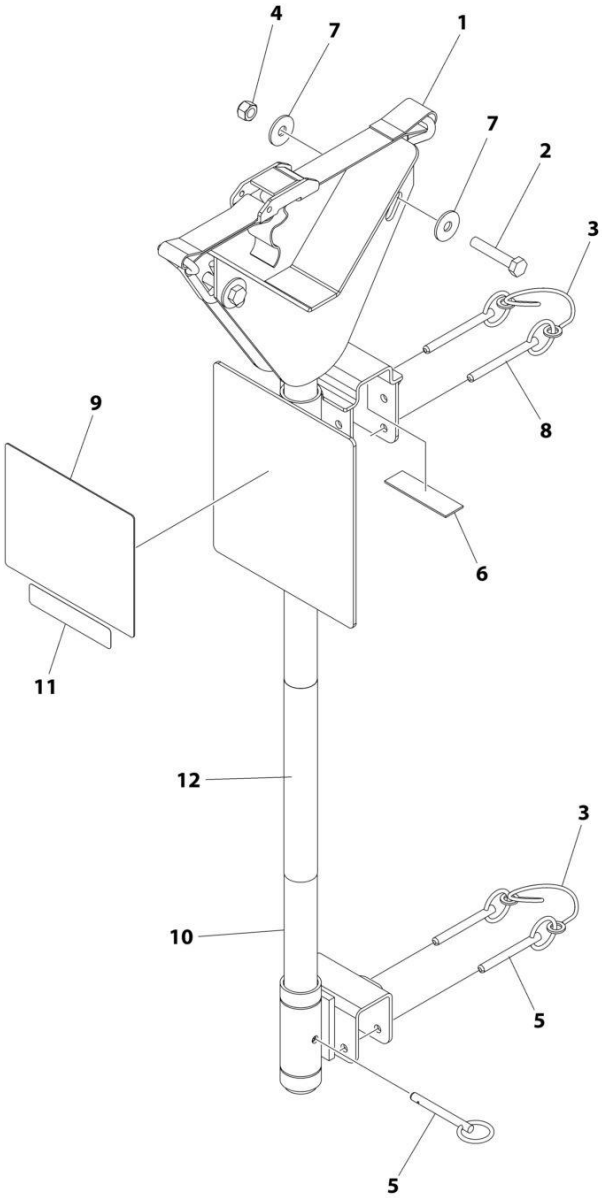

ART_1001270855

FIGURE 4-9. PIPE RACKS INSTALLATION (OPTIONAL)

ITEM	PART NUMBER	QTY	DESCRIPTION	REV
	1001270855	Ref	PIPE RACK INSTALLATION	C
1	0480100	2	Tie-Strap	
2	0700817	4	Bolt M8 x 45	
3	1060379	4	Lanyard	
4	3290805	4	Nut M8	
5	3422661	6	Pin	
6	4420062	AR	Tape	
7	4811902	8	Washer M8	
8	1001235941	4	Pin	
9	1001287711	2	Decal - Pipe Rack Capacity	
10	1001270533	2	Rack Pipe	
11	1001270631	2	Decal - ACCY Weight	
12	1001271412	2	Decal - JLG	

FIGURE 4-10. OVERHEAD PROTECTION INSTALLATION (KOREAN SPECS)

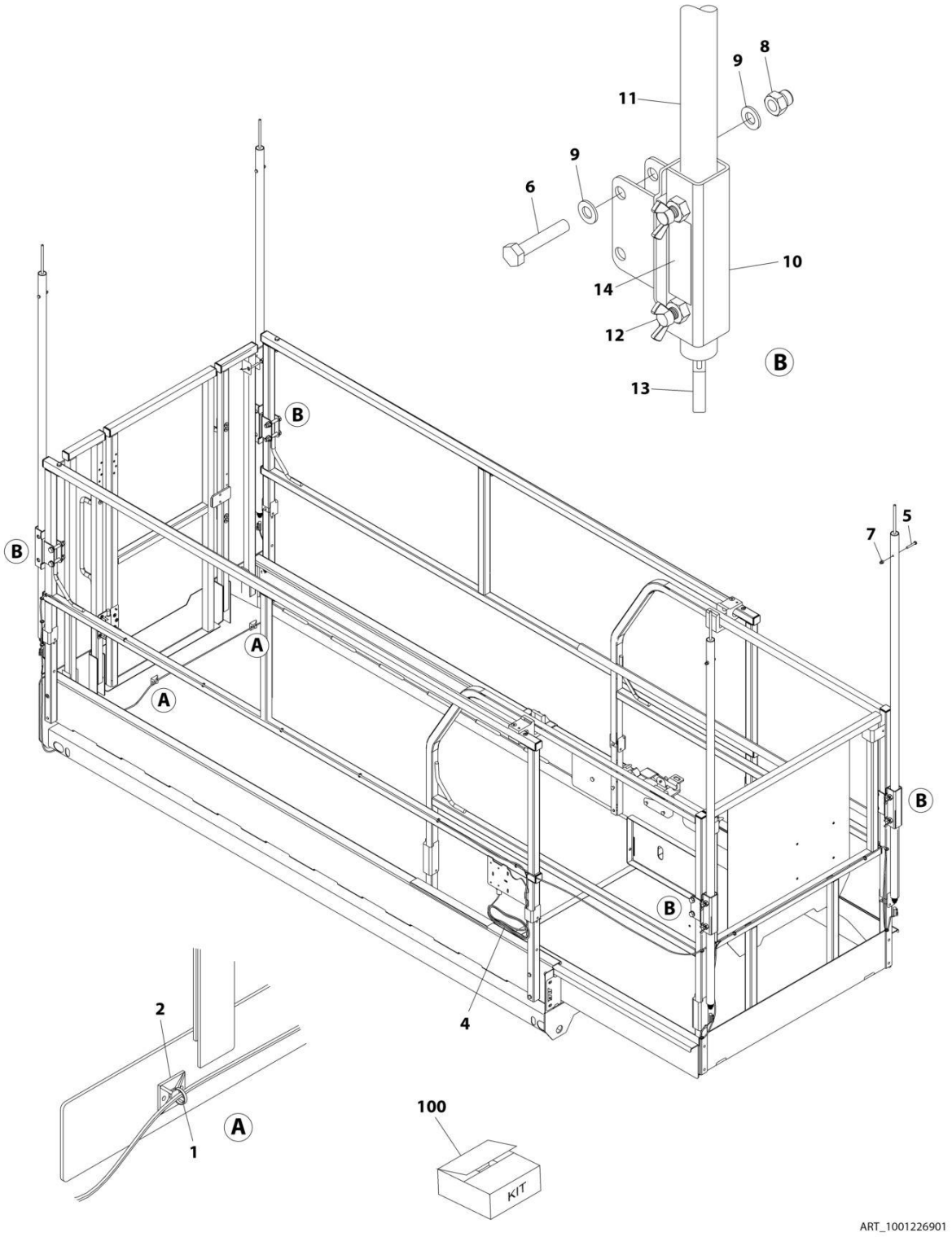

FIGURE 4-10. OVERHEAD PROTECTION INSTALLATION (KOREAN SPECS)

ITEM	PART NUMBER	QTY	DESCRIPTION	REV
	1001226901	Ref	OVERHEAD PROTECTION INSTALLATION (KOREAN SPECS)	A
1	4240017	AR	Tie-Strap	
2	4460234	2	Mount, Tie-Strap	
4	1001227728	1	Overhead Protection Harness	A
4	4460891	4	Plug, Male - 2 Position (X503-X506)	
4	4460465	8	Socket, Female	
4	4460536	1	Receptacle, Female - 3 Position (X507)	
4	4460464	2	Pin, Male	
4	4460466	1	Plug, Terminal	
5	0700616	4	Bolt M6 x 40	
6	0701019	8	Bolt M10 x 55	
7	3290606	4	Nut M6	
8	3291006	8	Nut M10	
9	4812000	16	Washer M10	
10	1001221275	4	Bracket	
11	1001221276	4	Tube	
12	1001222914	8	Thumb Screw	
13	1001226277	4	Switch, Overhead Protection	
14	1001228184	1	Decal - Overhaed Protection Weight	
100	1001221244	1	Overhead Protection Kit (Includes Items 5-14)	

FIGURE 4-11. WOKSTATION INSTALLATION (OPTIONAL)

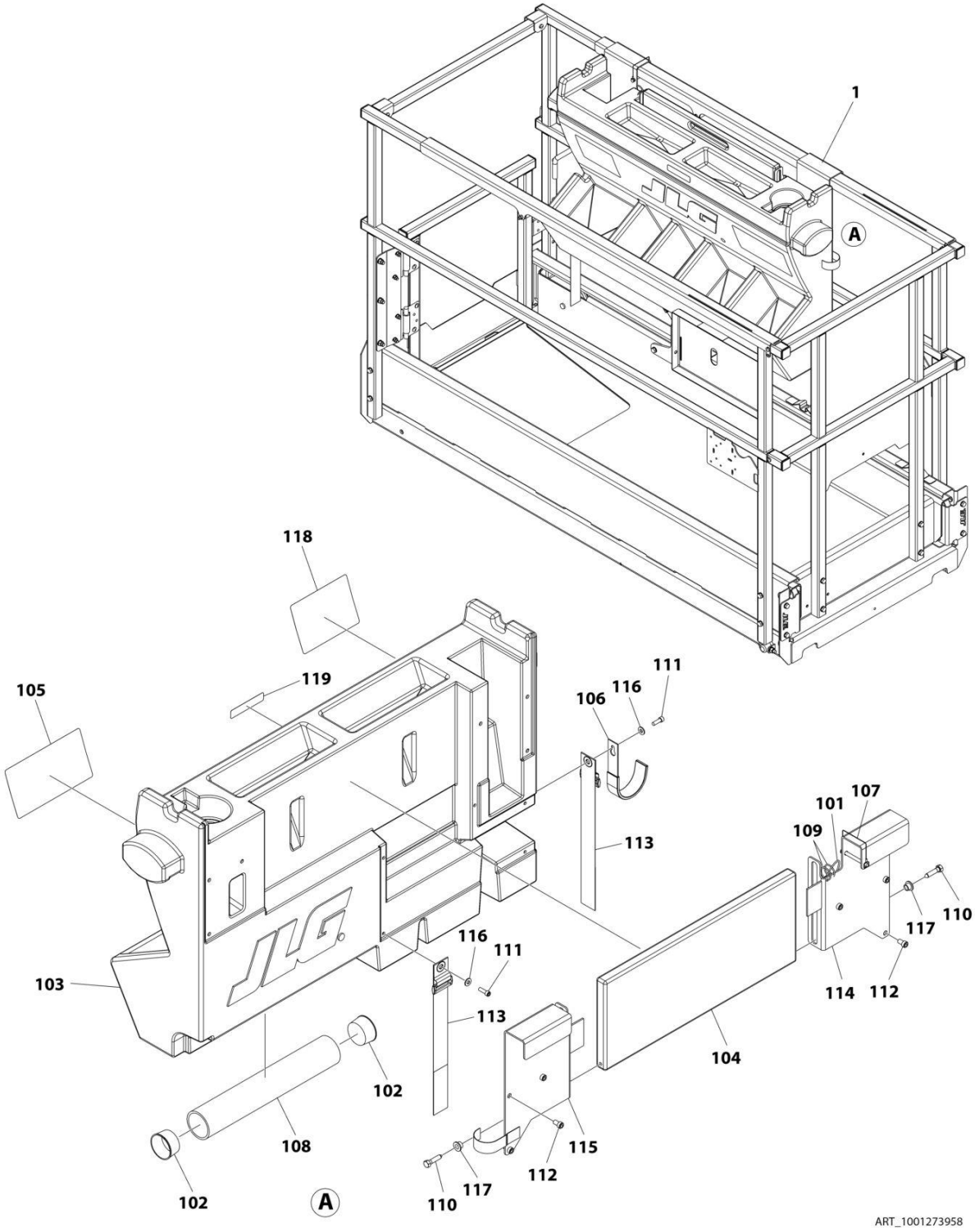

FIGURE 4-11. WOKSTATION INSTALLATION (OPTIONAL)

ITEM	PART NUMBER	QTY	DESCRIPTION	REV
	1001273958	Ref	WORKSTATION INSTALLATION	A
1	1001273957	1	Workstation Accessory	A
101	1060379	1	Lanyard	
102	1120555	2	Cap	
103	1580023	1	Container, Work Bench	
104	1580024	1	Tray, Work Surface	
105	1705997	1	Decal - Workstation	
106	2700100	1	Hook, Hanger	
107	3422219	1	Pin	
108	3460334	1	Pipe	
109	3760170	2	Ring	
110	3900355	2	Screw	
111	3931412	2	Bolt 1/4 x 3/4	
112	3931508	6	Bolt 5/16 x 1/2	
113	4240003	2	Strap	
114	4340853	1	Mount, Channel (RH)	
115	4340854	1	Mount, Channel (LH)	
116	4711400	2	Washer 1/4	
117	4740480	2	Washer, Plastic Insert	
118	1001274837	1	Decal - Workstation Capacity	
119	1001275631	1	Decal - ACCY Weight	

FIGURE 4-12. ELECTRICIAN TREE INSTALLATION (OPTIONAL)

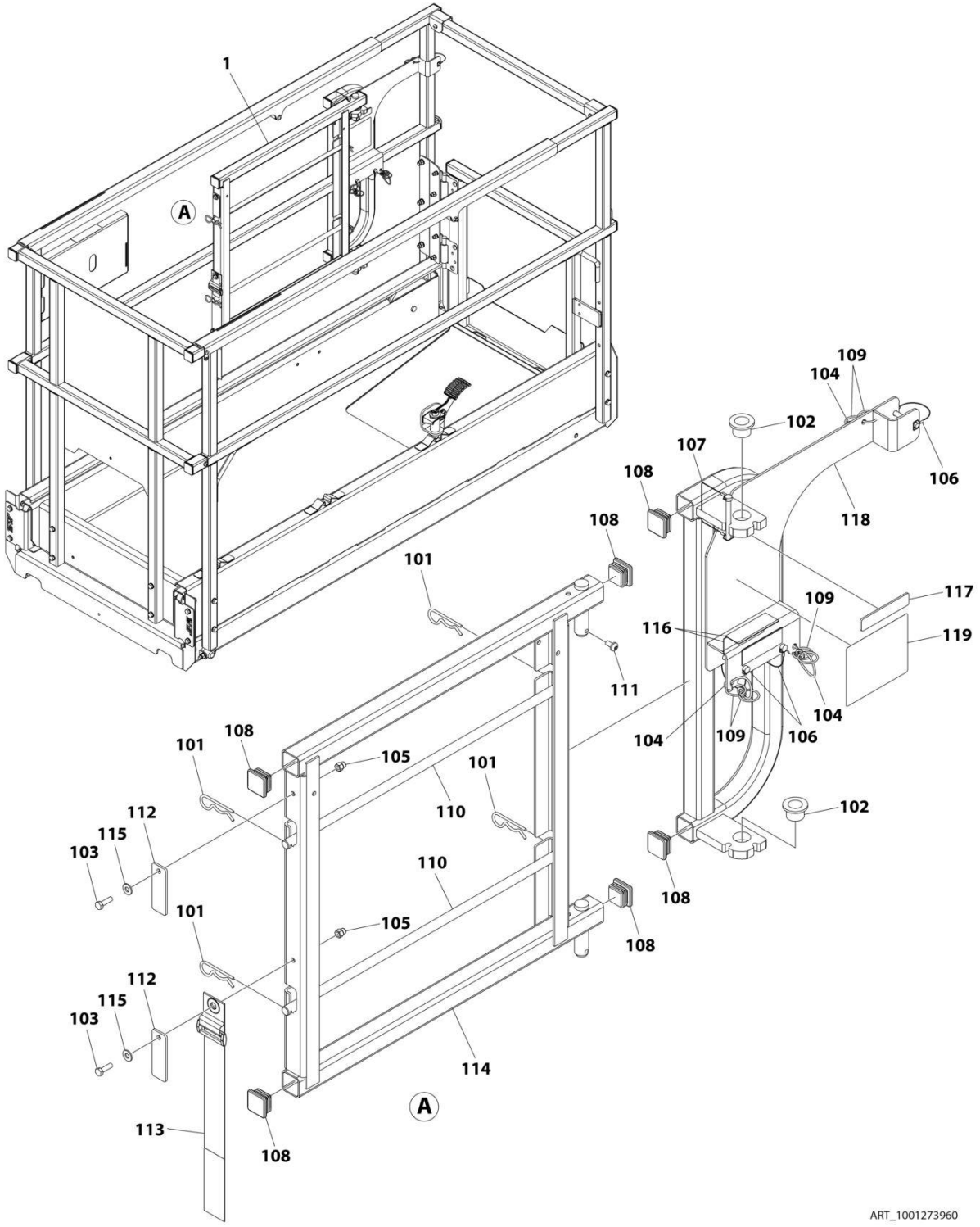

FIGURE 4-12. ELECTRICIAN TREE INSTALLATION (OPTIONAL)

ITEM	PART NUMBER	QTY	DESCRIPTION	REV
	1001273960	Ref	ELECTRICIAN TREE INSTALLATION	A
1	1001273907	1	Electrician Tree Accessory	A
101	80325	4	Hairpin, Cotter	
102	0440223	2	Bushing	
103	0700610	2	Bolt M6 x 20	
104	1060379	4	Lanyard	
105	3290606	2	Cap, Nut M6 x 1	
106	3421453	3	Pin	
107	3422219	1	Pin	
108	3520072	6	Plug, Cap	
109	3760170	8	Ring	
110	3841675	2	Rod	
111	4191706	1	Screw M6 x 12	
112	4220227	2	Stop, Spool Rod	
113	4240003	1	Strap	
114	4340947	1	Mount, Spool Rack	
115	4711400	2	Washer 1/4	
116	1001189762	3	Tape	
117	1001252626	1	Decal - ACCY Weight	
118	1001273909	1	Support	
119	1001274838	1	Decal	

FIGURE 4-13. WORKLIGHTS INSTALLATION (OPTIONAL)

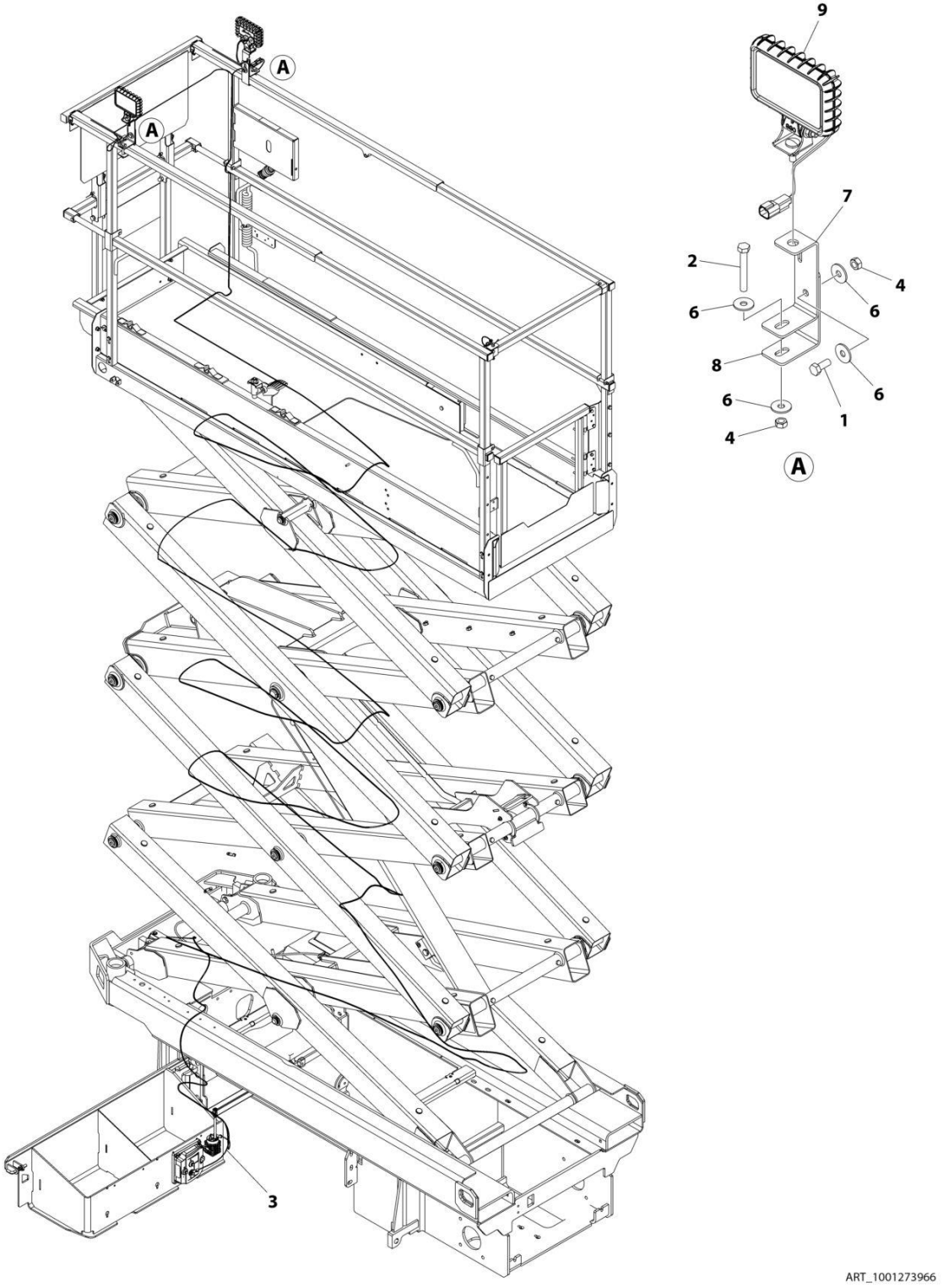

FIGURE 4-13. WORKLIGHTS INSTALLATION (OPTIONAL)

ITEM	PART NUMBER	QTY	DESCRIPTION	REV
	1001273966	Ref	WORKLIGHTS INSTALLATION	A
1	0760810	2	Bolt M8 x 20	
2	0760820	2	Bolt M8 x 60	
3	1061042	1	Cable, Worklight	
4	3290801	4	Nut M8	
5	4240033	AR	Tie-Strap (Not Shown)	
6	4811902	8	Washer M8	
7	1001273961	2	Bracket	
8	1001273962	2	Bracket	
9	1001273964	2	Lamp, Worklight Kit	

FIGURE 4-14. PANEL CARRIER INSTALLATION (OPTIONAL)

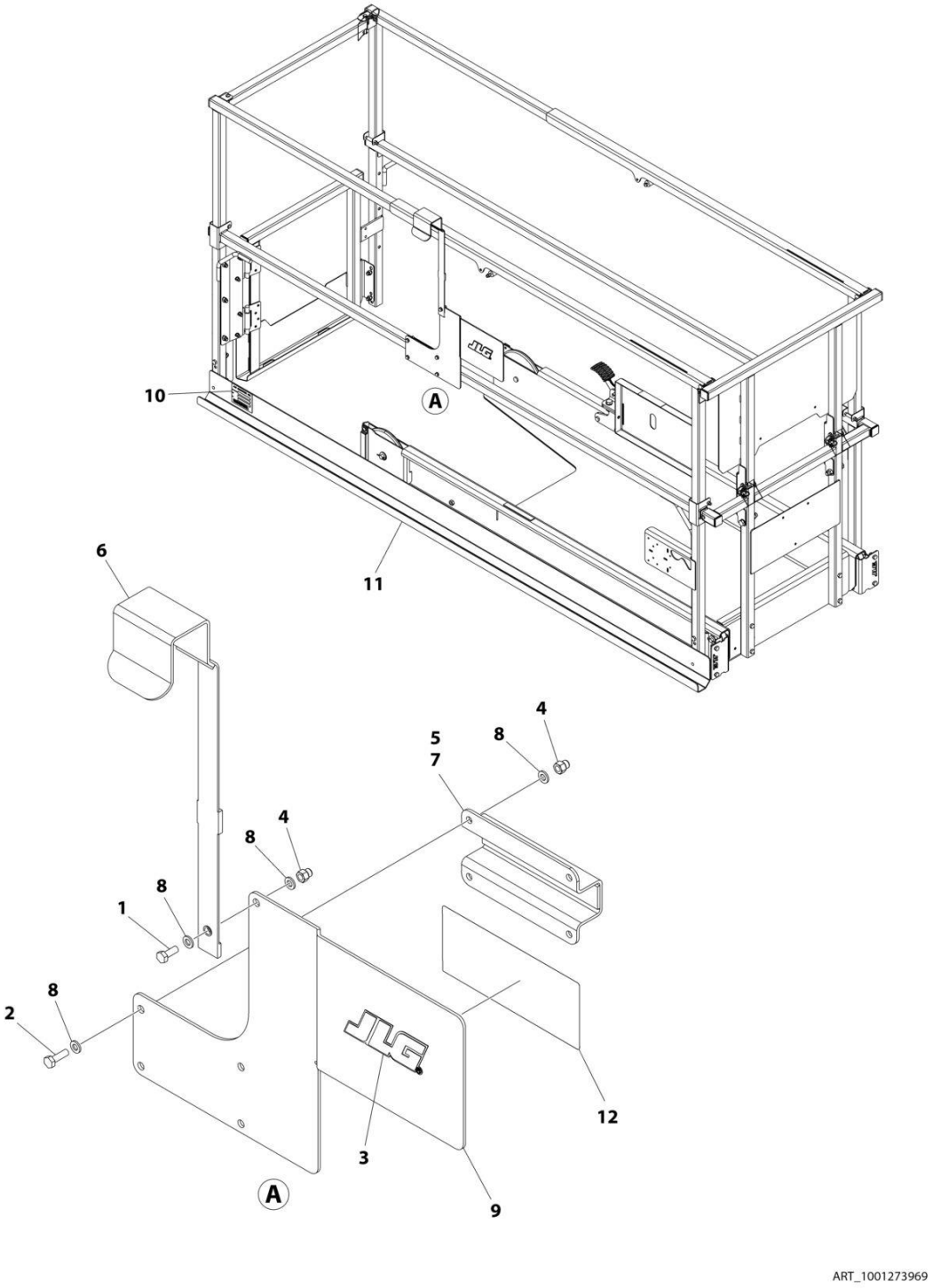

FIGURE 4-14. PANEL CARRIER INSTALLATION (OPTIONAL)

ITEM	PART NUMBER	QTY	DESCRIPTION	REV
	1001273969	Ref	PANEL CARRIER INSTALLATION	A
1	0760608	1	Bolt M6 x 16	
2	0760610	4	Bolt M6 x 20	
3	1702010	1	Decal - JLG	
4	3290606	5	Nut M6	
5	3574505	1	Bracket	
6	4240165	1	Tie Strap	
7	4420037	150 mm	Tape	
8	4811700	10	Washer M6	
9	1001235863	1	Plate, Panel Carrier	
10	1001253726	1	Decal - Accessory	
11	1001273968	1	Channel, Panel Carrier	
12	1001274839	1	Decal - Panel Carrier Capacity	

FIGURE 4-15. PLATFORM CONTROL PLUG INSTALLATION

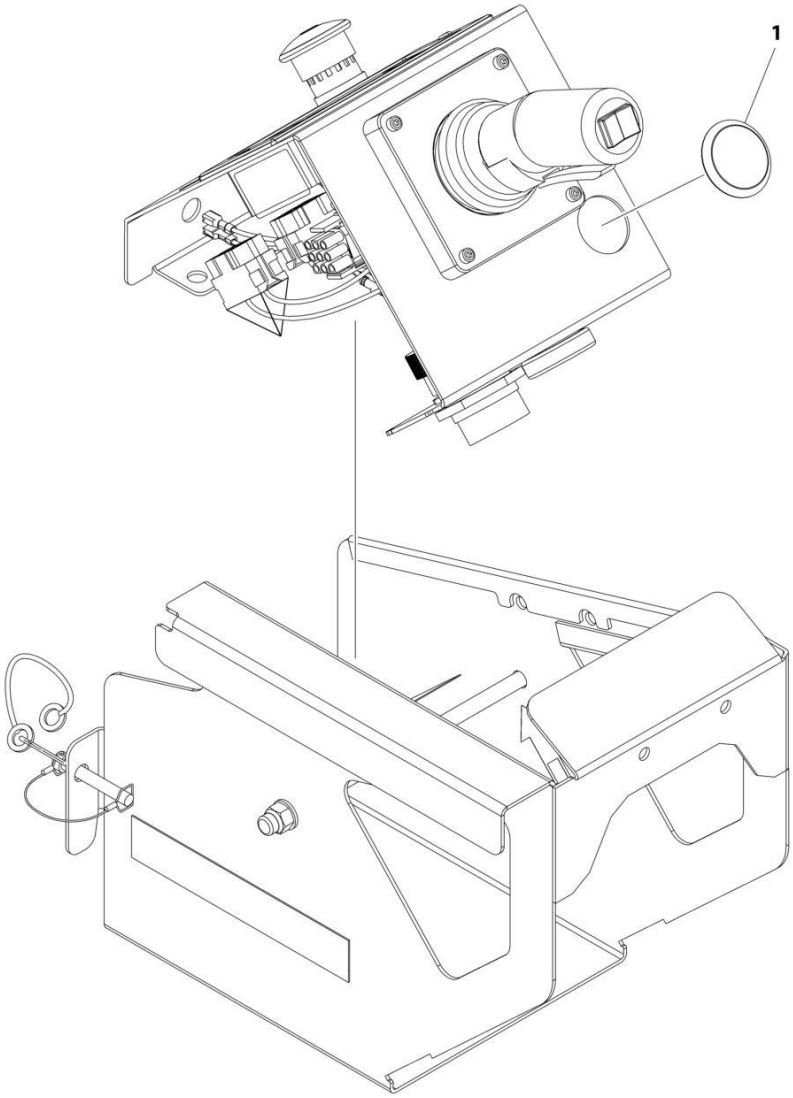

ART_1001274661

FIGURE 4-15. PLATFORM CONTROL PLUG INSTALLATION

ITEM	PART NUMBER	QTY	DESCRIPTION	REV
	1001274661	Ref	PLATFORM CONTROL PLUG INSTALLATION	A
1	1001262221	1	Plug	

FIGURE 4-16. USB/PHONE CRADLE INSTALLATION

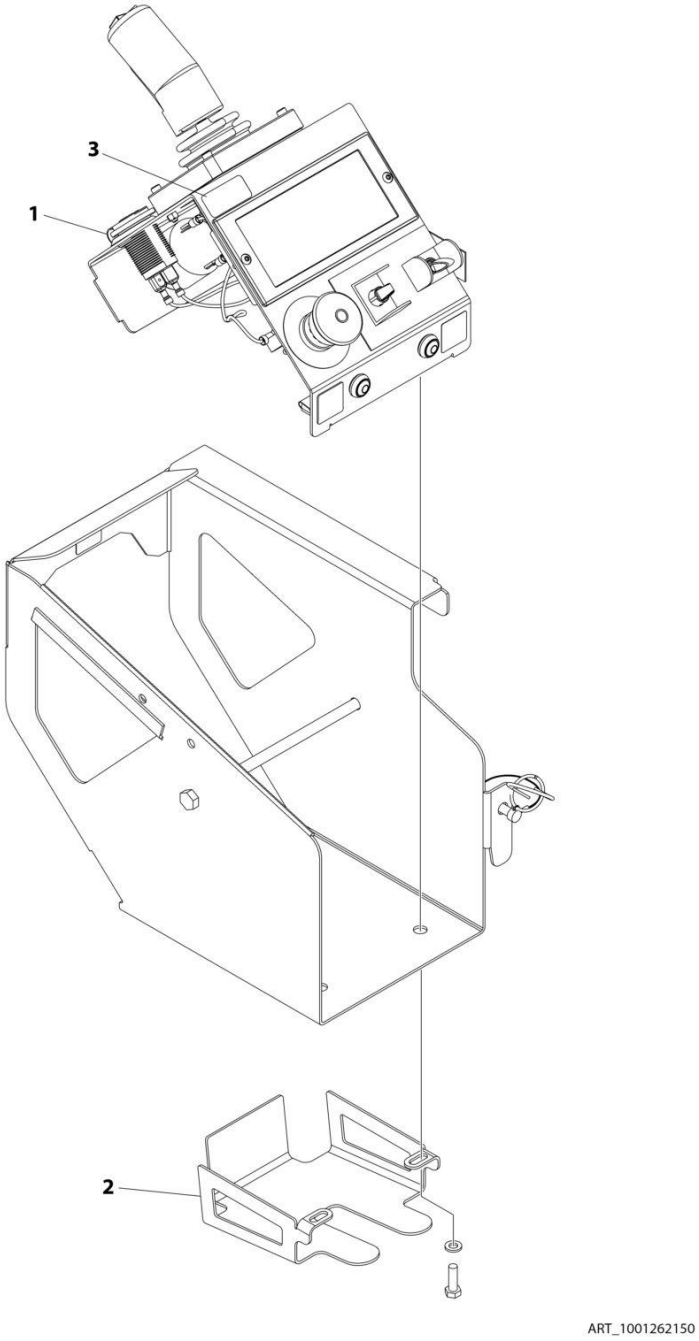

FIGURE 4-16. USB/PHONE CRADLE INSTALLATION

ITEM	PART NUMBER	QTY	DESCRIPTION	REV
	1001262150	Ref	USB/PHONE CRADLE INSTALLATION	B
1	1001253800	1	Terminal, USB Receptacle	
2	1001261131	1	Bracket, Phone	
3	1001274168	1	Decal, USB Charge	

SECTION 5 - CYLINDER

FIGURE 5-1. LIFT CYLINDER ASSEMBLY

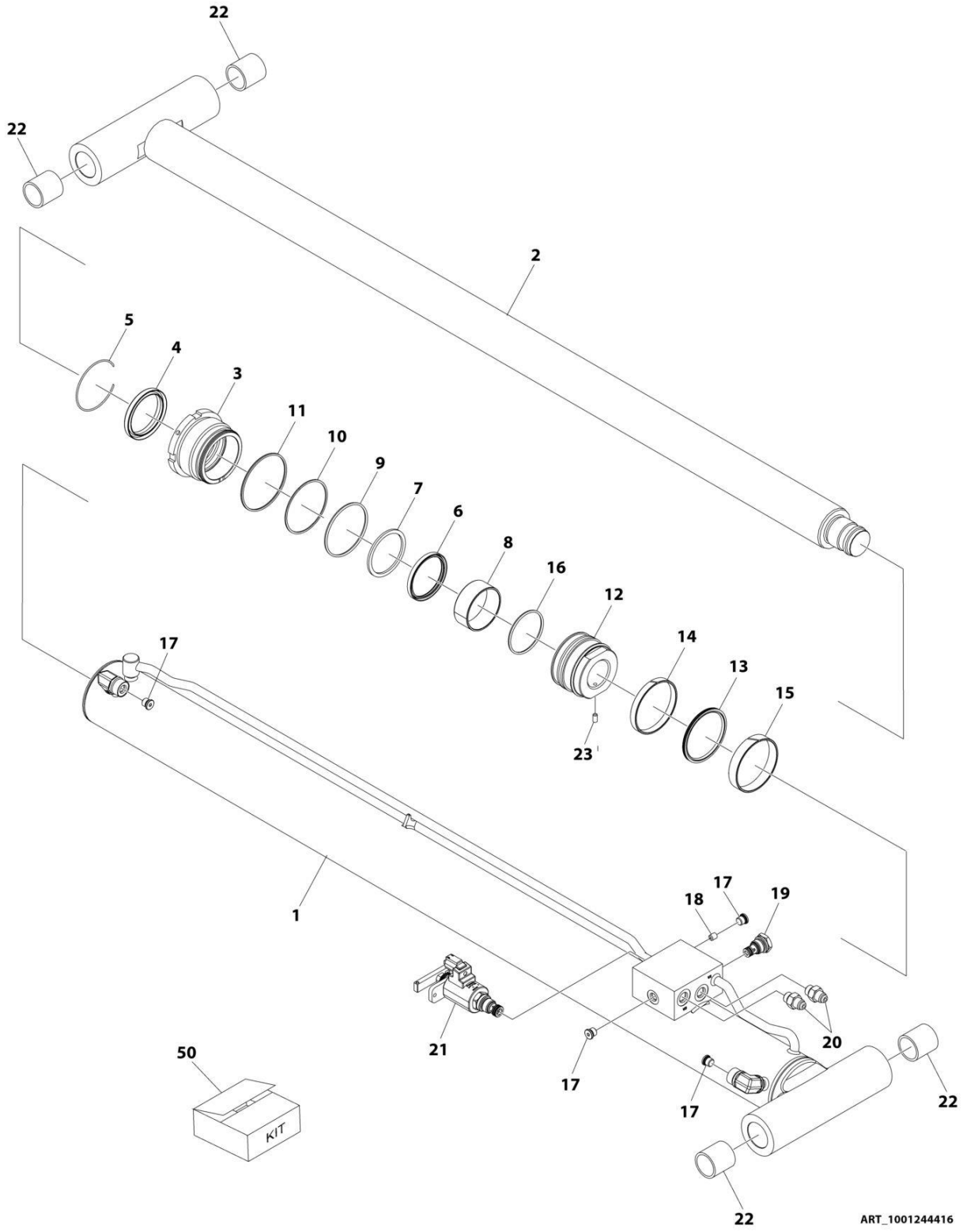

FIGURE 5-1. LIFT CYLINDER ASSEMBLY

ITEM	PART NUMBER	QTY	DESCRIPTION	REV
	1001244416	Ref	LIFT CYLINDER ASSEMBLY	D
		Ref	**Note: Original Cylinder May Have Been Replaced with Service Replacement. Identify PN Stamped on Cylinder Before Ordering Parts.**	
1	See Note	NSS	Barrel (Note: Purchase Complete Cylinder)	
2	70007101	1	Rod	
3	70007102	1	Head	
4	See Note	NSS	Wiper	
5	70027244	1	Ring, Retaining	
6	See Note	NSS	Seal	
7	See Note	NSS	Ring, Back-up	
8	70007103	1	Bearing	
9	See Note	NSS	O-Ring	
10	See Note	NSS	Ring, Back-up	
11	See Note	NSS	O-Ring	
12	70007104	1	Piston	
13	See Note	NSS	Seal, Piston	
14	See Note	NSS	Ring, Wear	
15	See Note	NSS	Ring, Wear	
16	See Note	NSS	O-Ring	
17	2220883	4	Plug	
18	70007055	1	Orifice	
19	70004585	1	Valve, Cartridge - Check	
20	2220371	1	Fitting, Straight - JIC/ORB	
21	70005236	1	Valve, Cartridge - Manual Descent (Includes Lever & Spring)	
22	0962006	4	Bearing	
23	70007105	1	Setscrew M6 x 12	
50	70007106	1	Seal Kit - 1001244416 Cylinder (Includes Items 4,,6,7, 9-11 & 13-16)	

FIGURE 5-2. STEER CYLINDER ASSEMBLY

NOTE: IDENTIFY THE PART NUMBER STAMPED ON CYLINDER BEFORE ORDERING PARTS.

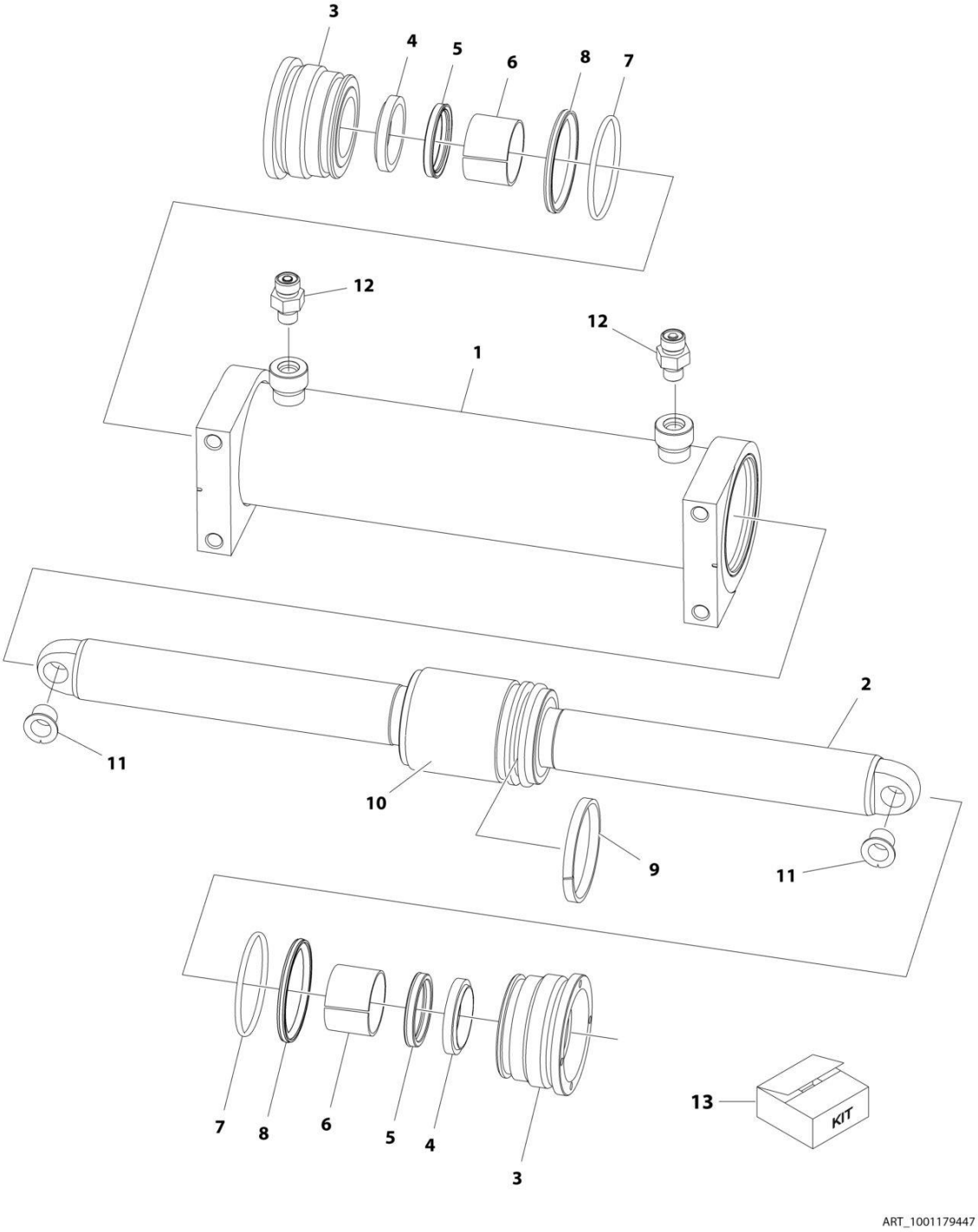

FIGURE 5-2. STEER CYLINDER ASSEMBLY

ITEM	PART NUMBER	QTY	DESCRIPTION	REV
	1001179447	Ref	STEER CYLINDER ASSEMBLY (SH-PAC)	A
		Ref	Note: Original Cylinder May Have Been Replaced with Service Replacement. Identify PN Stamped on Cylinder Before Ordering Parts.	
1	70005421	1	Barrel	
2	70005420	1	Rod	
3	70004241	2	Head	
4	See Note	NSS	Wiper (Note: Use Item 13)	
5	See Note	NSS	Seal, Rod (Note: Use Item 13)	
6	See Note	NSS	Ring, Wear (Note: Use Item 13)	
7	See Note	NSS	O-Ring (Note: Use Item 13)	
8	See Note	NSS	Ring, Back-up (Note: Use Item 13)	
9	See Note	NSS	Seal, Piston (Note: Use Item 13)	
10	70005419	1	Spacer	
11	0440259	2	Bearing, Flange	
12	2110404	2	Fitting, Straight ORFS/ORB	
13	70004239	1	Seal Kit - 1001179447 Cylinder (Includes Items 4-9)	

SECTION 6 - HYDRAULIC

FIGURE 6-1. HYDRAULIC COMPONENTS INSTALLATION

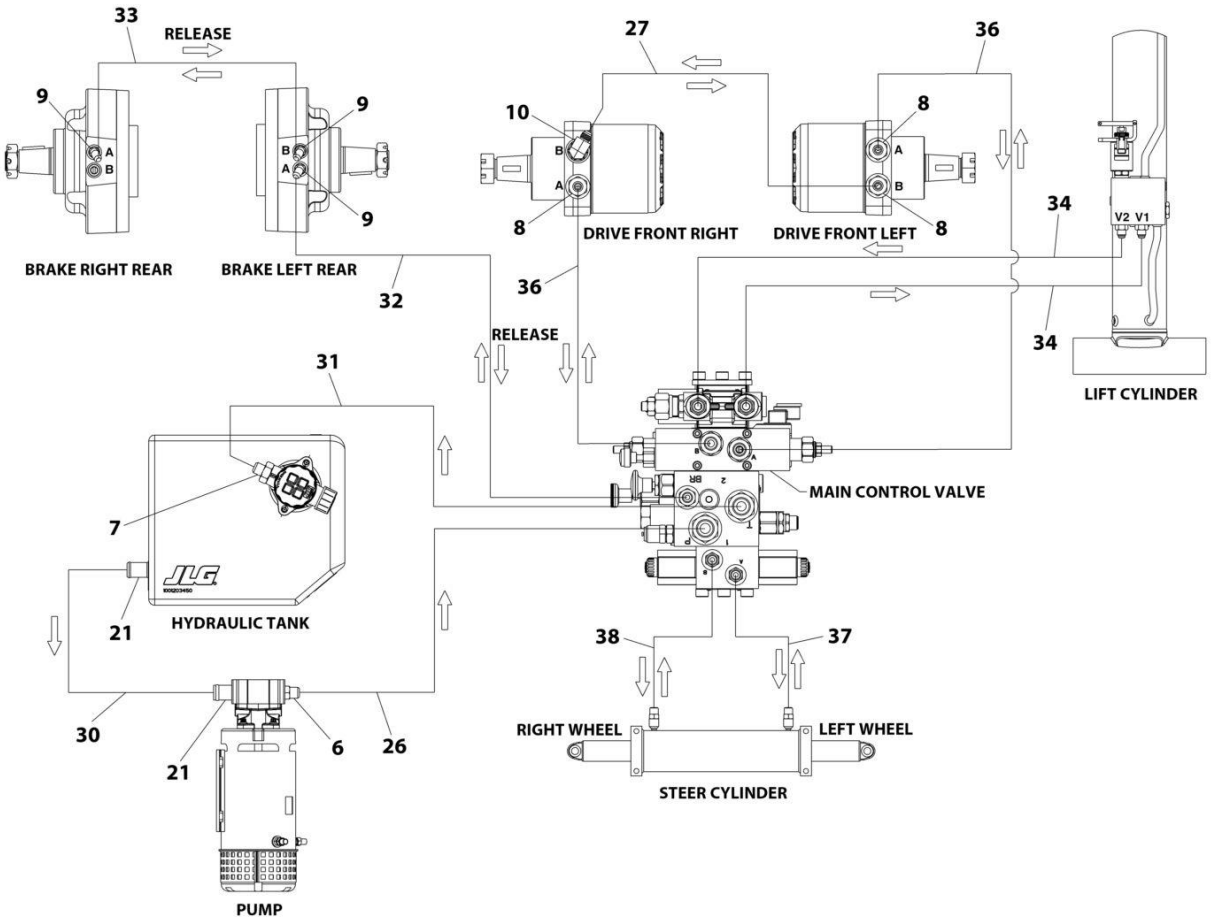

ART_1001370008_2OF2

FIGURE 6-1. HYDRAULIC COMPONENTS INSTALLATION

ITEM	PART NUMBER	QTY	DESCRIPTION	REV
	1001370008	Ref	HYDRAULIC COMPONENTS INSTALLATION	D
6	2220373	1	Fitting, Straight - JIC/ORB	
7	2220375	1	Fitting, Straight - JIC/ORB	
8	2220497	3	Fitting, Straight - JIC/ORB	
9	2220502	3	Fitting, 45 - JIC/ORB	
10	2220628	1	Fitting, 90 - JIC/ORB	
21	1001143501	2	Clamp, T-Bolt Heavy Duty	
26	1001203836	1	Hose	
27	1001203846	1	Hose	
30	1001247627	1	Hose	
31	1001236801	1	Hose	
32	1001236802	1	Hose	
33	1001236803	1	Hose	
34	1001236809	2	Hose	
36	1001242230	2	Hose	
37	1001243487	1	Hose	
38	1001243488	1	Hose	

SECTION 7 - ELECTRICAL

FIGURE 7-1. AC BOX AT PLATFORM INSTALLATION - 110V GFI (ALL SPECS EXCEPT AUSTRALIAN, CE & UK CA SPECS)

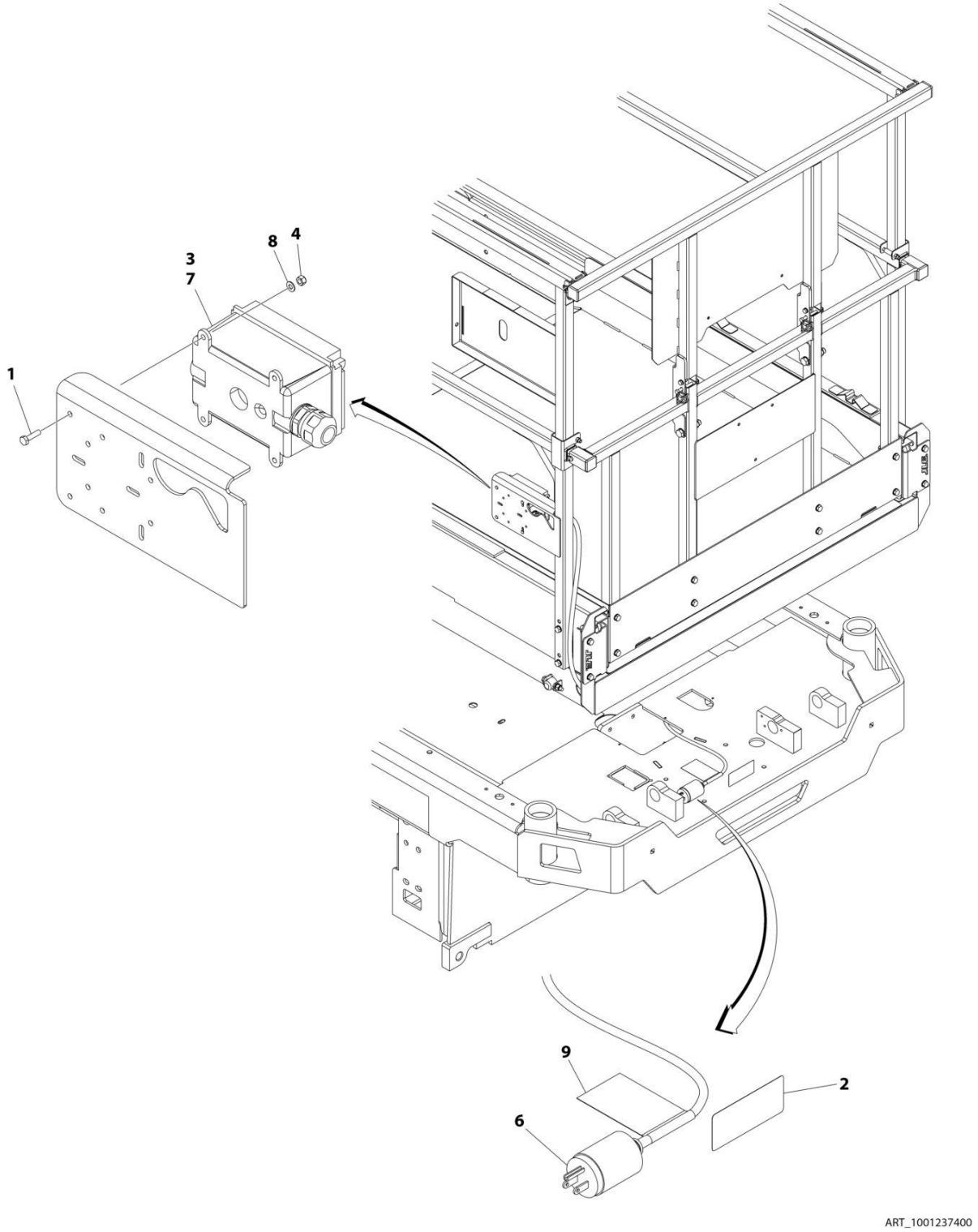

FIGURE 7-1. AC BOX AT PLATFORM INSTALLATION - 110V GFI (ALL SPECS EXCEPT AUSTRALIAN, CE & UK CA SPECS)

ITEM	PART NUMBER	QTY	DESCRIPTION	REV
	1001237400	Ref	AC BOX AT PLATFORM INSTALLATION - 110V GFI	C
1	0760408	4	Bolt M4 x 16	
2	1703464	1	Decal - AC Power	
3	2902431	1	Receptacle Box Kit (See Separate Breakdown in this Section)	
4	3290405	4	Nut M4	
5	4240017	AR	Tie-Strap (Not Shown)	
6	4460138	1	Plug, Male - AC	
7	4460315	1	Terminal	
8	4811400	4	Washer M4	
9	1001102258	1	Decal - AC Label	

FIGURE 7-2. AC BOX AT PLATFORM INSTALLATION - 110V IEC YELLOW (CE & UK CA SPECS)

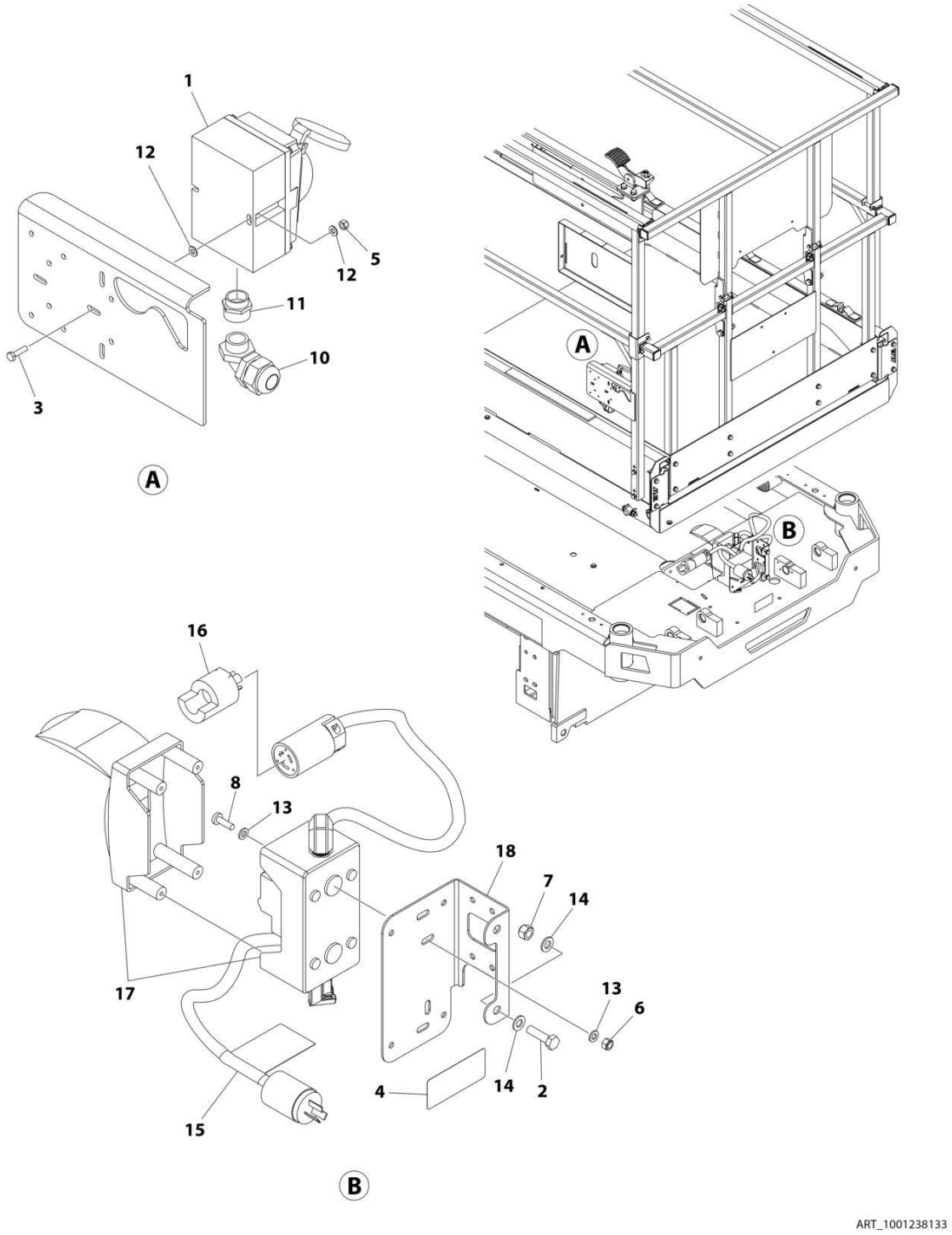

FIGURE 7-2. AC BOX AT PLATFORM INSTALLATION - 110V IEC YELLOW (CE & UK CA SPECS)

ITEM	PART NUMBER	QTY	DESCRIPTION	REV
	1001238133	Ref	AC BOX AT PLATFORM INSTALLATION - 110V IEC YELLOW	B
1	0275216	1	Receptacle Box Kit - 110V IEC Yellow (See Separate Breakdown in this Section)	
2	0700814	2	Bolt M8 x 30	
3	0760408	2	Bolt M4 x 16	
4	1703464	1	Decal - AC Power	
5	3290405	2	Nut M4	
6	3290605	2	Nut M6	
7	3290805	2	Nut M8	
8	4010610	2	Screw M6 x 20	
9	4240017	AR	Tie-Strap (Not Shown)	
10	4461257	1	Connector, Strain Relief	
11	4461258	1	Connector, Adapter	
12	4811400	4	Washer M4	
13	4811700	4	Washer M6	
14	4811900	4	Washer M8	
15	1001102258	1	Decal - AC Label	
16	1001120204	1	Plug, Male Twist	
17	1001209776	1	Breaker Box Kit (See Separate Breakdown in this Section)	
18	1001238198	1	Bracket	

FIGURE 7-3. AC BOX AT PLATFORM INSTALLATION - 220V IEC BLUE (CE & UK CA SPECS)

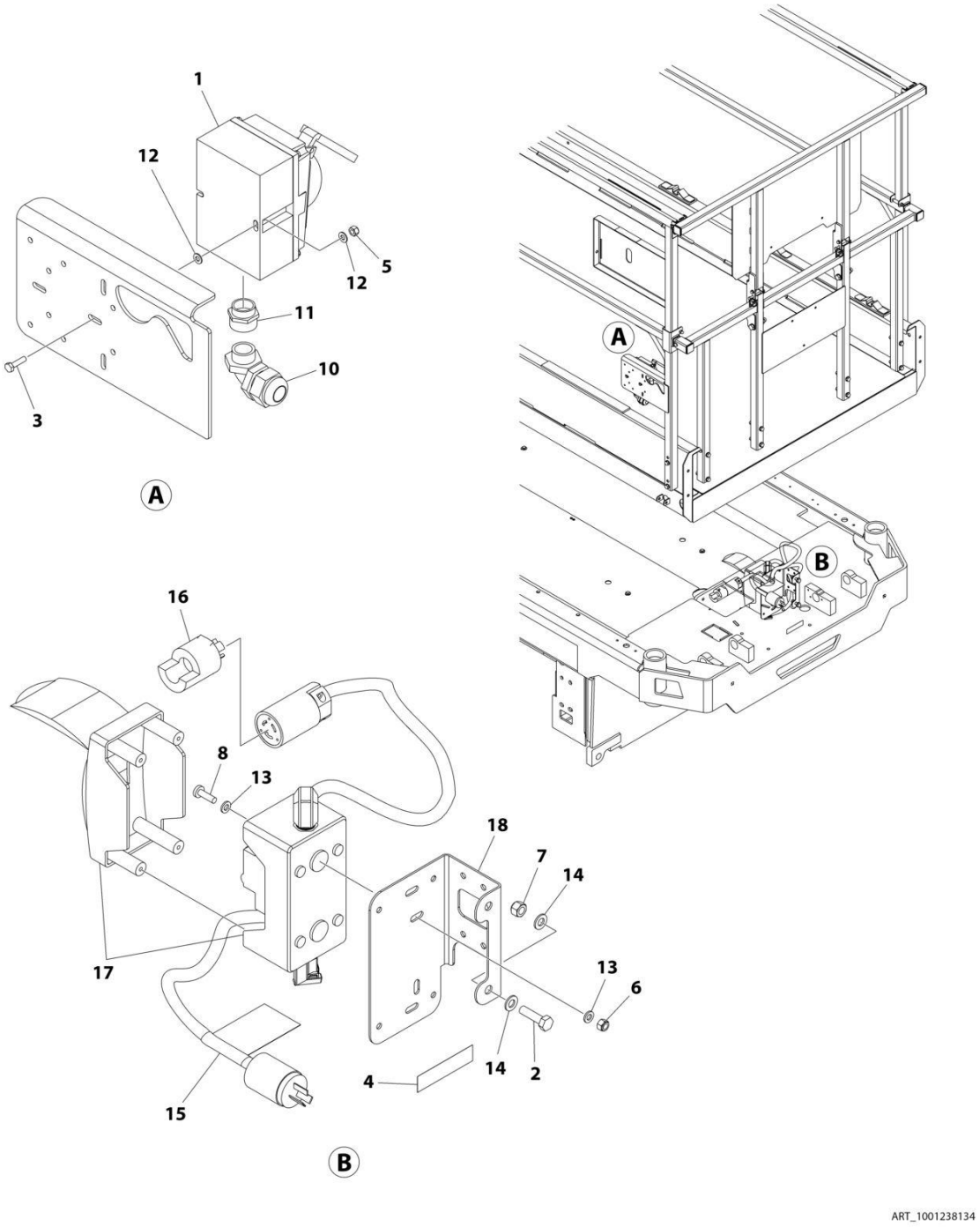

FIGURE 7-3. AC BOX AT PLATFORM INSTALLATION - 220V IEC BLUE (CE & UK CA SPECS)

ITEM	PART NUMBER	QTY	DESCRIPTION	REV
	1001238134	Ref	AC BOX AT PLATFORM INSTALLATION - 220V IEC BLUE	A
1	0275217	1	Receptacle Box Kit - 220V IEC Blue (See Separate Breakdown in this Section)	
2	0700814	2	Bolt M8 x 30	
3	0760408	2	Bolt M4 x 16	
4	3252507	1	Decal - AC Power	
5	3290405	2	Nut M4	
6	3290605	2	Nut M6	
7	3290805	2	Nut M8	
8	4010610	2	Screw M6 x 20	
9	4240017	AR	Tie-Strap (Not Shown)	
10	4461257	1	Connector, Strain Relief	
11	4461258	1	Connector, Adapter	
12	4811400	4	Washer M4	
13	4811700	4	Washer M6	
14	4811900	4	Washer M8	
15	1001102258	1	Decal - AC Label	
16	1001120204	1	Plug, Male Twist	
17	1001209776	1	Breaker Box Kit (See Separate Breakdown in this Section)	
18	1001238198	1	Bracket	

FIGURE 7-4. AC BOX AT PLATFORM INSTALLATION - 220V CEE7 POST GROUND (CE & UK CA SPECS)

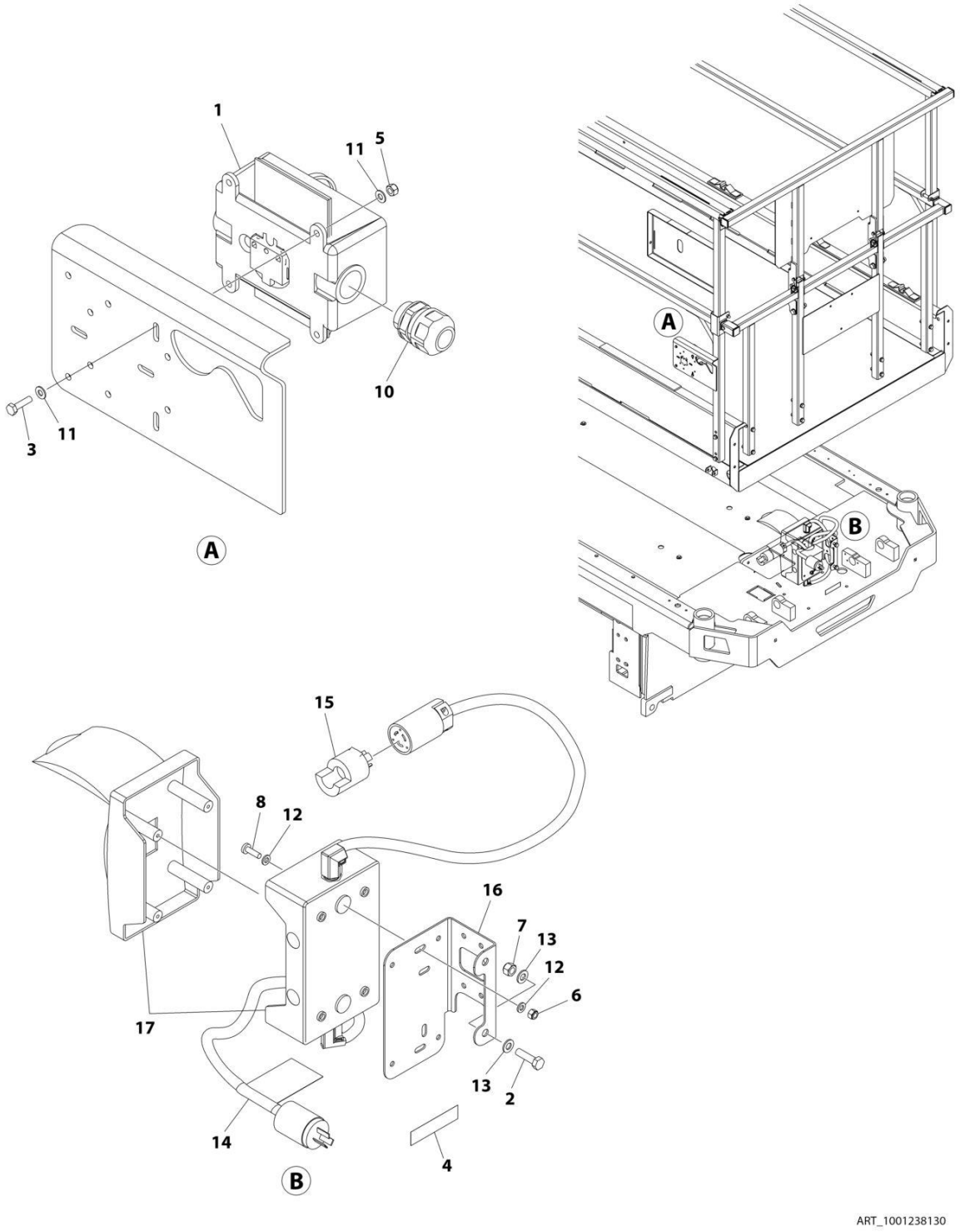

FIGURE 7-4. AC BOX AT PLATFORM INSTALLATION - 220V CEE7 POST GROUND (CE & UK CA SPECS)

ITEM	PART NUMBER	QTY	DESCRIPTION	REV
	1001238130	Ref	AC BOX AT PLATFORM INSTALLATION - 220V CEE7 POST GROUND	B
1	0275452	1	Receptacle Box Kit - 220V CEE7 Post Ground (See Separate Breakdown in this Section)	
2	0700814	2	Screw M8 x 30	
3	0760408	4	Bolt M4 x 16	
4	3252507	1	Decal - AC Power	
5	3290405	4	Nut M4	
6	3290605	2	Nut M6	
7	3290805	2	Nut M8	
8	4010610	2	Screw M6 x 20	
9	4240017	AR	Tie-Strap (Not Shown)	
10	4460662	1	Connector, Strain Relief	
11	4811400	8	Washer M4	
12	4811700	4	Washer M6	
13	4811900	4	Washer M8	
14	1001102258	1	Decal - AC Label	
15	1001120204	1	Plug, Male Twist	
16	1001238198	1	Bracket	
17	1001209482	1	Breaker Box Kit (See Separate Breakdown in this Section)	

FIGURE 7-5. AC BOX AT PLATFORM INSTALLATION - 220V CEE7 SIDE GROUND (CE & UK CA SPECS)

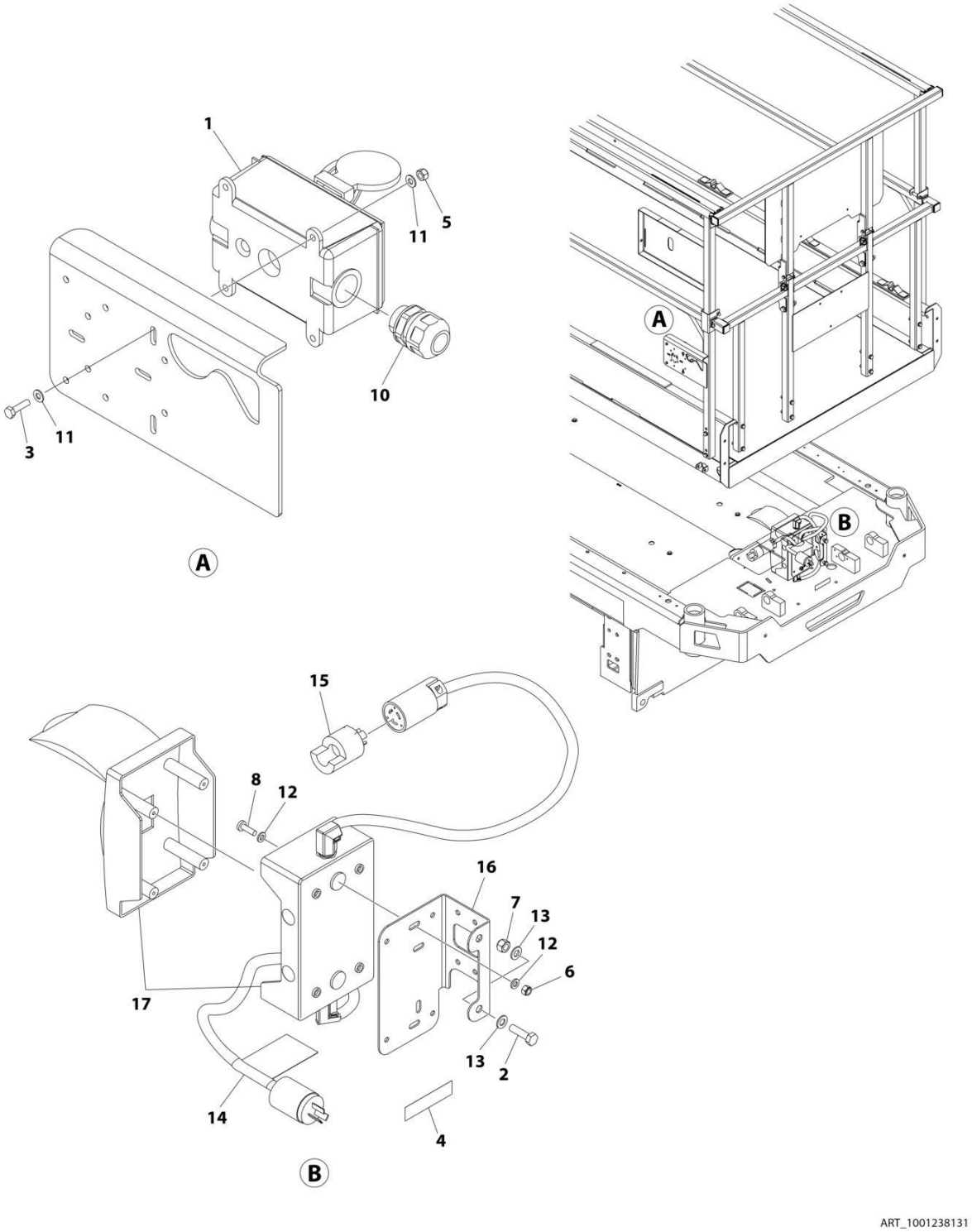

FIGURE 7-5. AC BOX AT PLATFORM INSTALLATION - 220V CEE7 SIDE GROUND (CE & UK CA SPECS)

ITEM	PART NUMBER	QTY	DESCRIPTION	REV
	1001238131	Ref	AC BOX AT PLATFORM INSTALLATION - 220V CEE7 SIDE GROUND	B
1	0275453	1	Receptacle Box Kit - 220V CEE7 Side Ground (See Separate Breakdown in this Section)	
2	0700814	2	Bolt M8 x 30	
3	0760408	4	Bolt M4 x 16	
4	3252507	1	Decal - AC Power	
5	3290405	4	Nut M4	
6	3290605	2	Nut M6	
7	3290805	2	Nut M8	
8	4010610	2	Screw M6 x 20	
9	4240017	AR	Tie-Strap (Not Shown)	
10	4460662	1	Connector, Strain Relief	
11	4811400	8	Washer M4	
12	4811700	4	Washer M6	
13	4811900	4	Washer M8	
14	1001102258	1	Decal - AC Label	
15	1001120204	1	Plug, Male Twist	
16	1001238198	1	Bracket	
17	1001209482	1	Breaker Box Kit (See Separate Breakdown in this Section)	

FIGURE 7-6. AC BOX AT PLATFORM INSTALLATION - 220V AFSINT 107 (CE & UK CA SPECS)

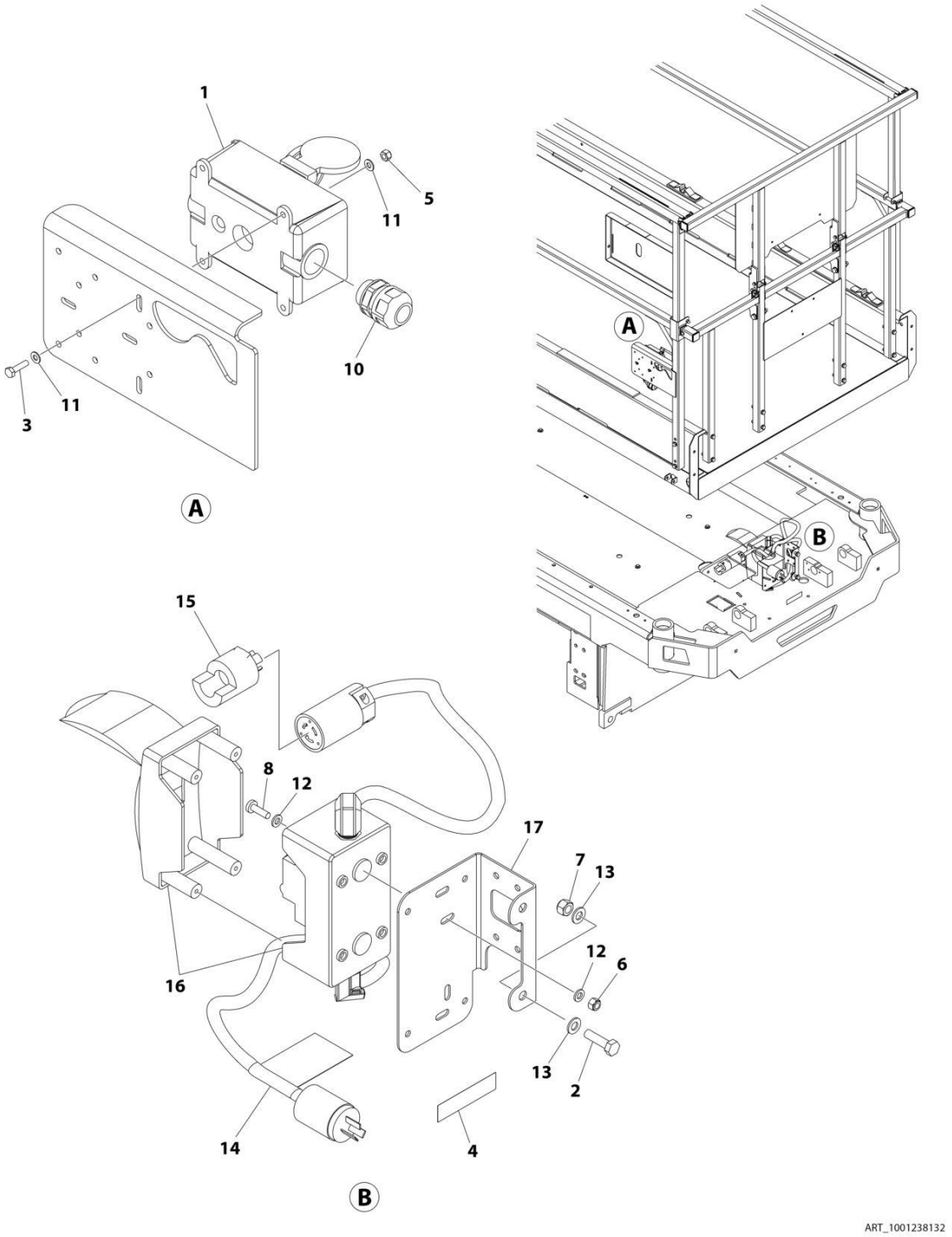

FIGURE 7-6. AC BOX AT PLATFORM INSTALLATION - 220V AFSINT 107 (CE & UK CA SPECS)

ITEM	PART NUMBER	QTY	DESCRIPTION	REV
	1001238132	Ref	AC BOX AT PLATFORM INSTALLATION - 220V AFSINT 107	B
1	0275454	1	Receptacle Box Kit - 220V AFSINT 107 (See Separate Breakdown in this Section)	
2	0700814	2	Bolt M8 x 30	
3	0760408	4	Bolt M4 x 16	
4	3252507	1	Decal - AC Power	
5	3290405	4	Nut M4	
6	3290605	2	Nut M6	
7	3290805	2	Nut M8	
8	4010610	2	Screw M6 x 20	
9	4240017	AR	Tie-Strap (Not Shown)	
10	4460662	1	Connector, Strain Relief	
11	4811400	8	Washer M4	
12	4811700	4	Washer M6	
13	4811900	4	Washer M8	
14	1001102258	1	Decal - AC Label	
15	1001120204	1	Plug, Male Twist	
16	1001209776	1	Breaker Box Kit (See Separate Breakdown in this Section)	
17	1001238198	1	Bracket	

FIGURE 7-7. AC BOX AT PLATFORM INSTALLATION - 220V LOCALLY SUPPLIED

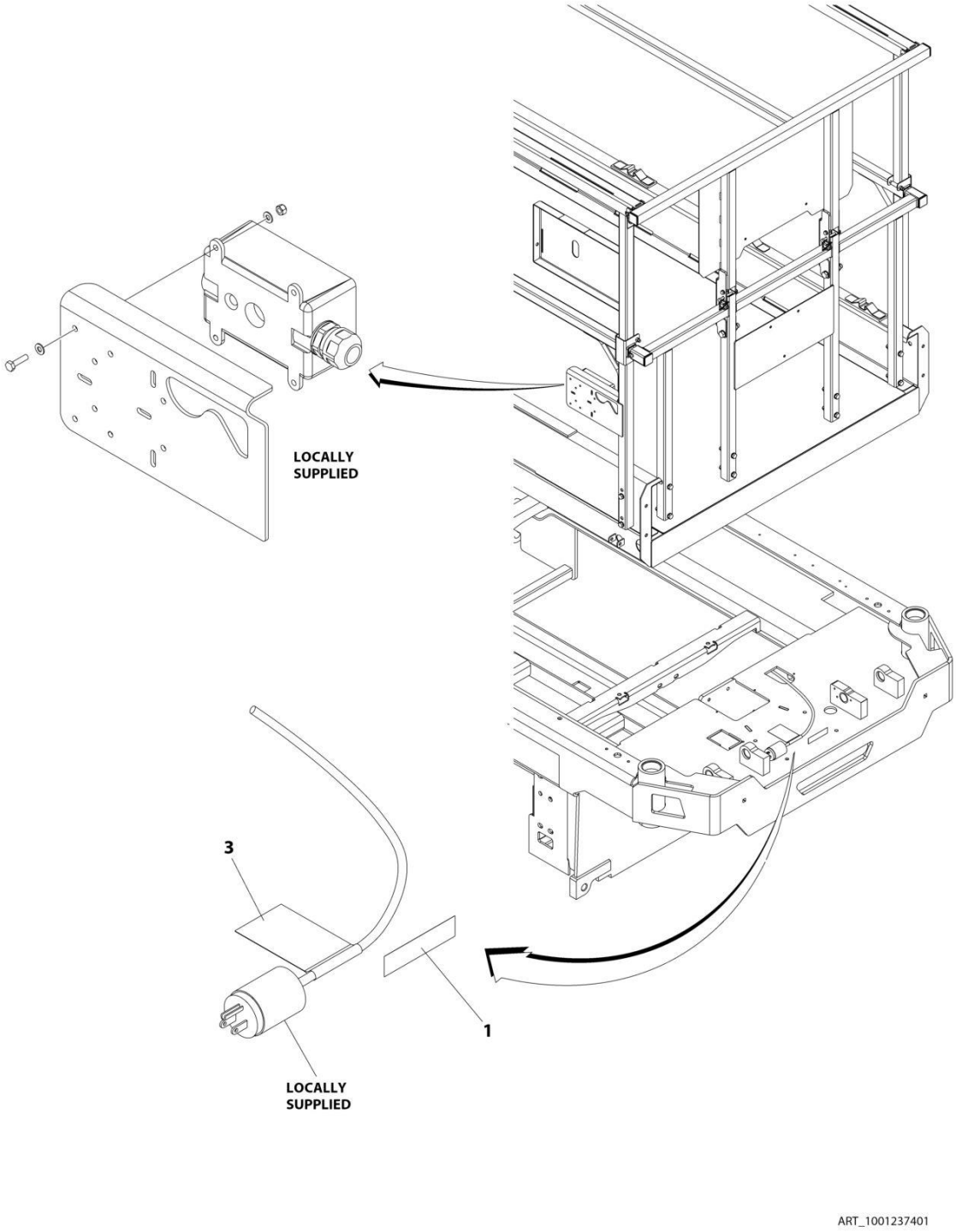

FIGURE 7-7. AC BOX AT PLATFORM INSTALLATION - 220V LOCALLY SUPPLIED

ITEM	PART NUMBER	QTY	DESCRIPTION	REV
	1001237401	Ref	AC BOX AT PLATFORM INSTALLATION - 220V LOCALLY SUPPLIED COMPONENTS (ALL SPECS)	C
1	3252507	1	Decal - 220 Volt	
2	4240017	AR	Tie-Strap (Not Shown)	
3	1001102258	1	Decal - AC Label	

FIGURE 7-8. AC BOX AT PLATFORM INSTALLATION - 220V (AUSTRALIAN SPECS)

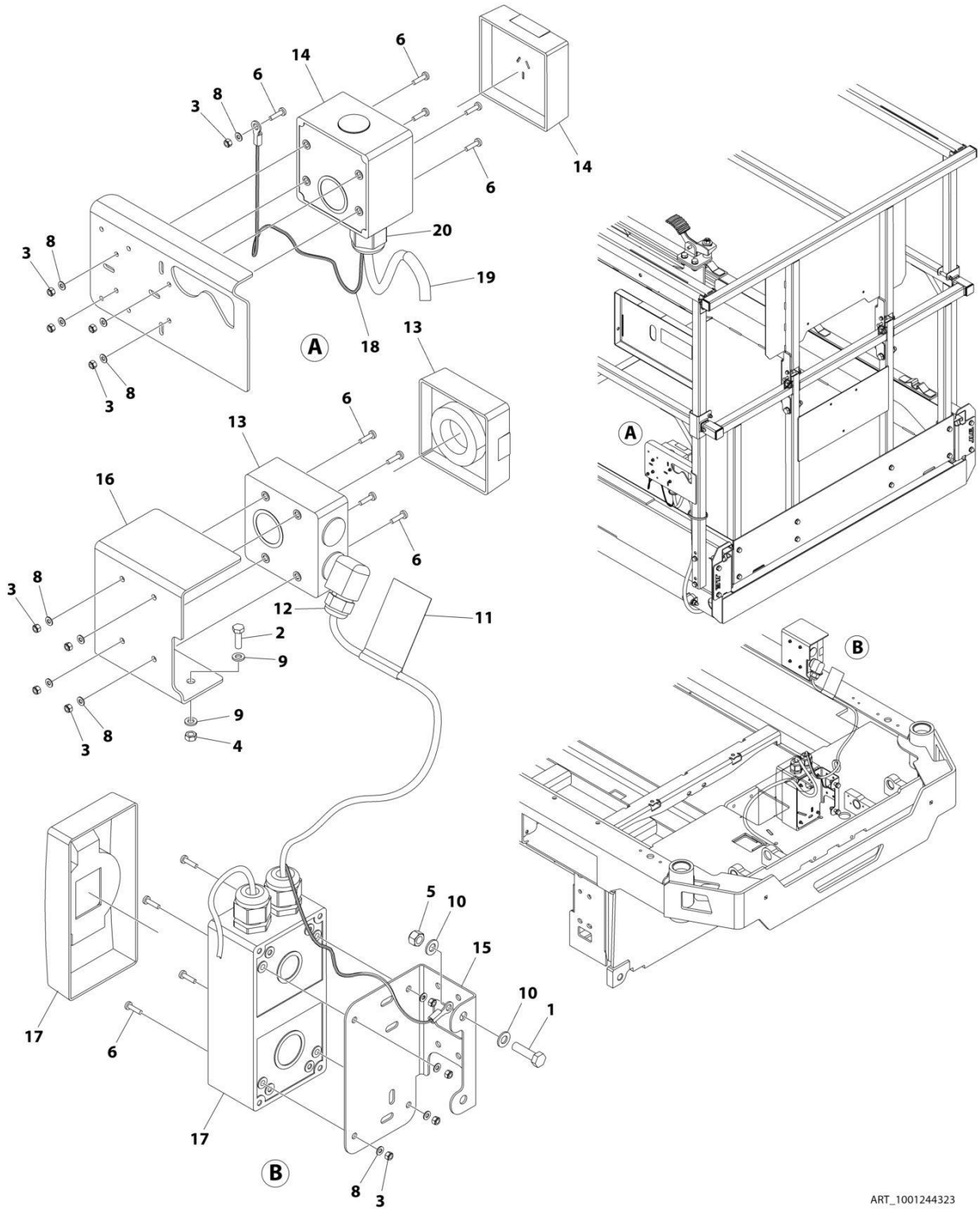

FIGURE 7-8. AC BOX AT PLATFORM INSTALLATION - 220V (AUSTRALIAN SPECS)

ITEM	PART NUMBER	QTY	DESCRIPTION	REV
	1001244323	Ref	AC BOX AT PLATFORM INSTALLATION - 220V (AUSTRALIAN SPECS)	B
1	0700814	2	Bolt M8 x 30	
2	0760610	2	Bolt M6 x 20	
3	3290405	13	Nut M4	
4	3290601	2	Nut M6	
5	3290805	2	Nut M8	
6	4010408	13	Screw M4 x 16	
7	4240017	AR	Tie-Strap (Not Shown)	
8	4811400	13	Washer M4	
9	4811700	4	Washer M6	
10	4811900	4	Washer M8	
11	1001102258	1	Decal - AC Label	
12	1001103471	1	Connector Strain Relief 90	
13	1001227267	1	Receptacle Australian - 230V	
14	1001227268	1	Receptacle Australian - 230V	
15	1001238198	1	Bracket	
16	1001244900	1	Bracket	
17	1001245739	1	Box and Breaker Electrical Assembly (See Separate Breakdown in this Section)	
18	1001245744	1	Earth/Ground Link Harness	
19	1001245747	1	Conduit	
20	1001097150	1	Terminal	

FIGURE 7-9. AC BOX AT PLATFORM INSTALLATION - 220V CHINA PLUG (CHINA SPECS)

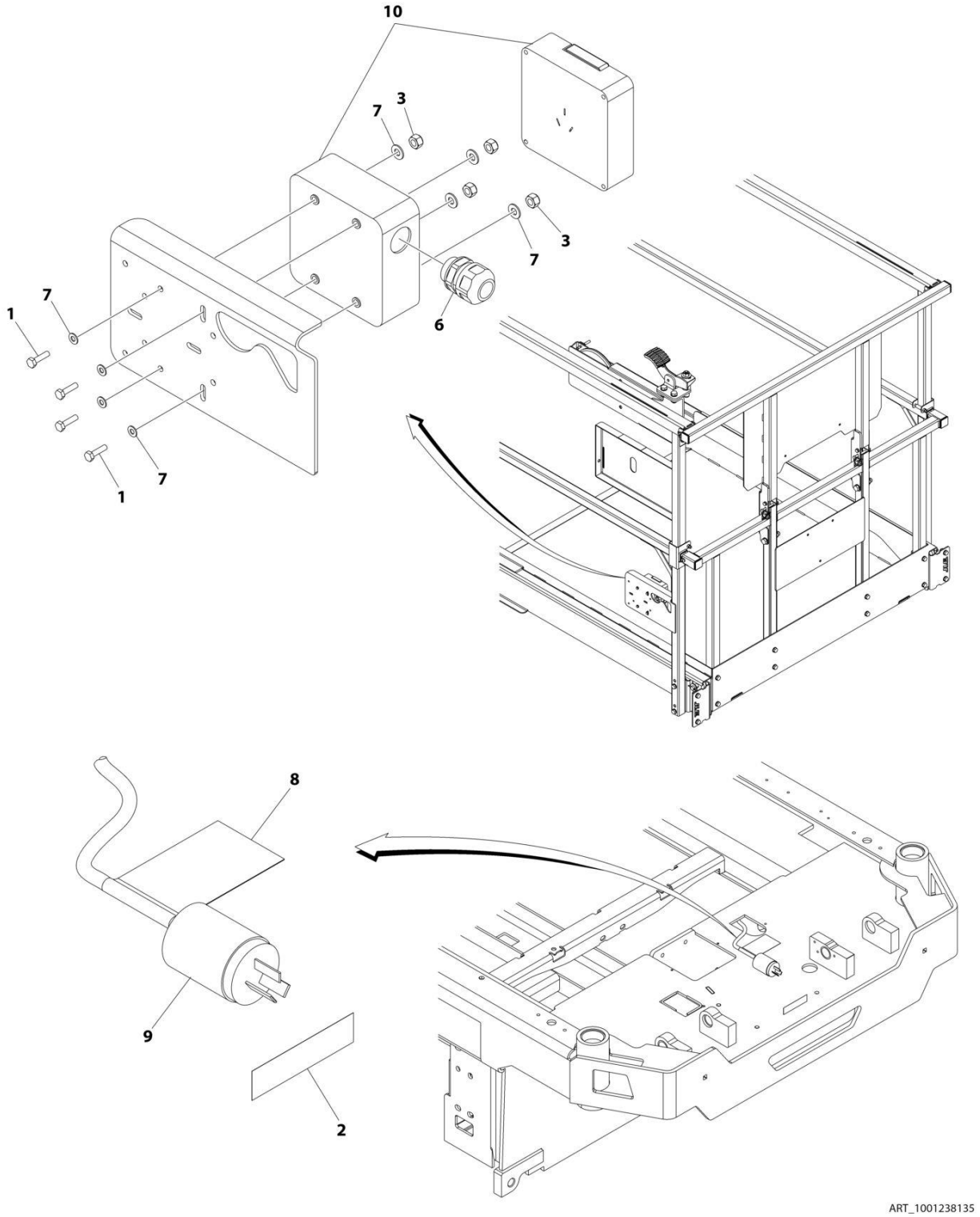

FIGURE 7-9. AC BOX AT PLATFORM INSTALLATION - 220V CHINA PLUG (CHINA SPECS)

ITEM	PART NUMBER	QTY	DESCRIPTION	REV
	1001238135	Ref	AC BOX AT PLATFORM INSTALLATION - 220V CHINA PLUG (CHINA SPECS)	A
1	0760408	4	Bolt M4 x 16	
2	3252507	1	Decal - 220 Volt	
3	3290405	4	Nut M4	
4	4240017	AR	Tie-Strap (Not Shown)	
5	4460315	1	Terminal (Not Shown)	
6	4460968	1	Connector, Strain Relief	
7	4811400	8	Washer M4	
8	1001102258	1	Decal - AC Label	
9	1001187816	1	Plug	
10	1001188116	1	Box	

FIGURE 7-10. BREAKER BOX KIT (AUSTRALIAN SPEC)

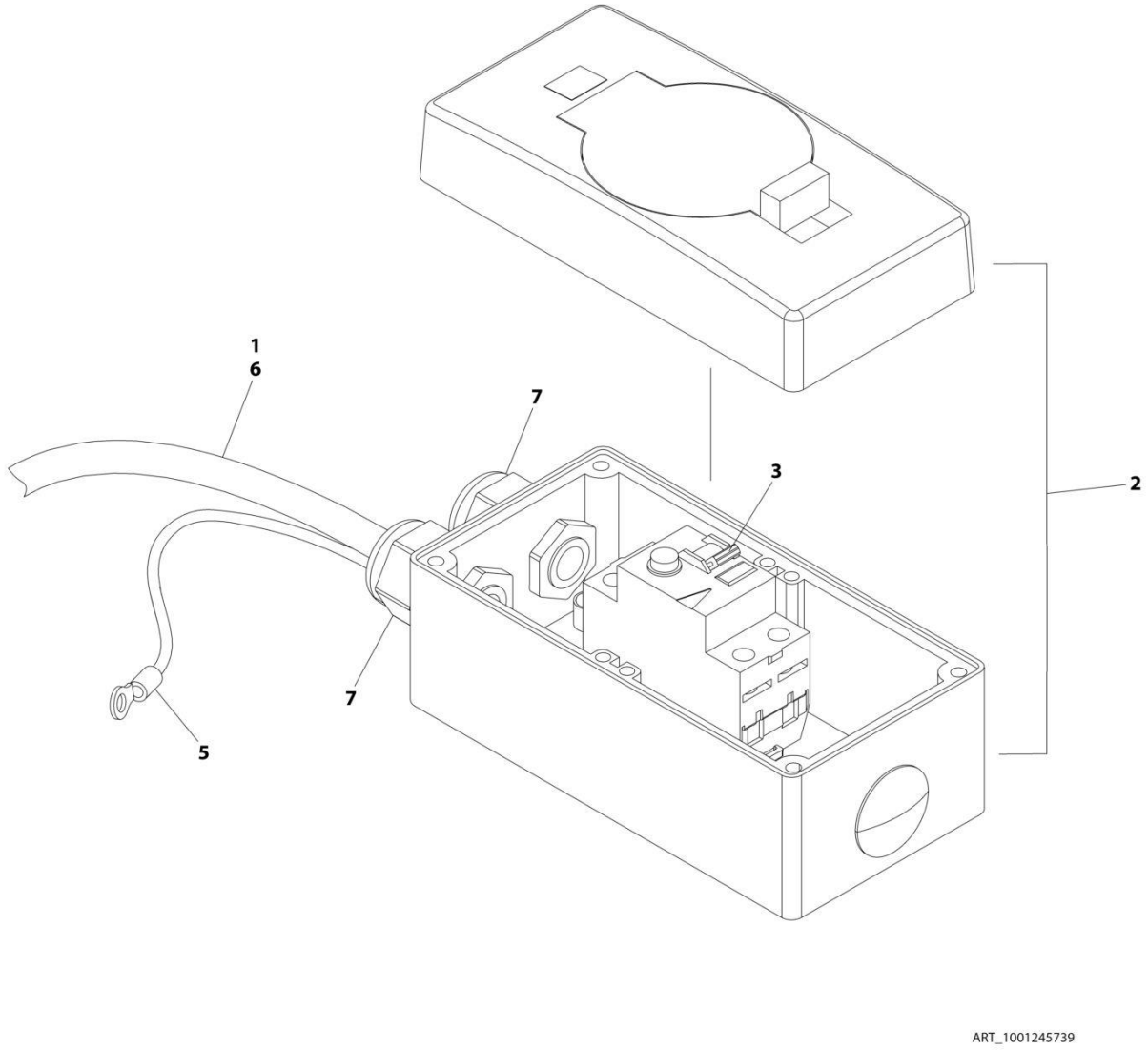

FIGURE 7-10. BREAKER BOX KIT (AUSTRALIAN SPEC)

ITEM	PART NUMBER	QTY	DESCRIPTION	REV
	1001245739	Ref	BREAKER BOX KIT	B
1	1060908	825 mm/ 32.5in	Cable	
2	1001227269	1	Enclosure	
3	1001228191	1	Breaker	
4	1001245743	1	Terminal (Not Shown)	
5	1001245744	1	Earth/Ground Link Harness	
6	1001125927	1	Conduit	
7	1001097150	2	Connector	

FIGURE 7-11. BREAKER BOX KIT WITH 1 DOUBLE BREAKER (CE & UK CA SPECS)

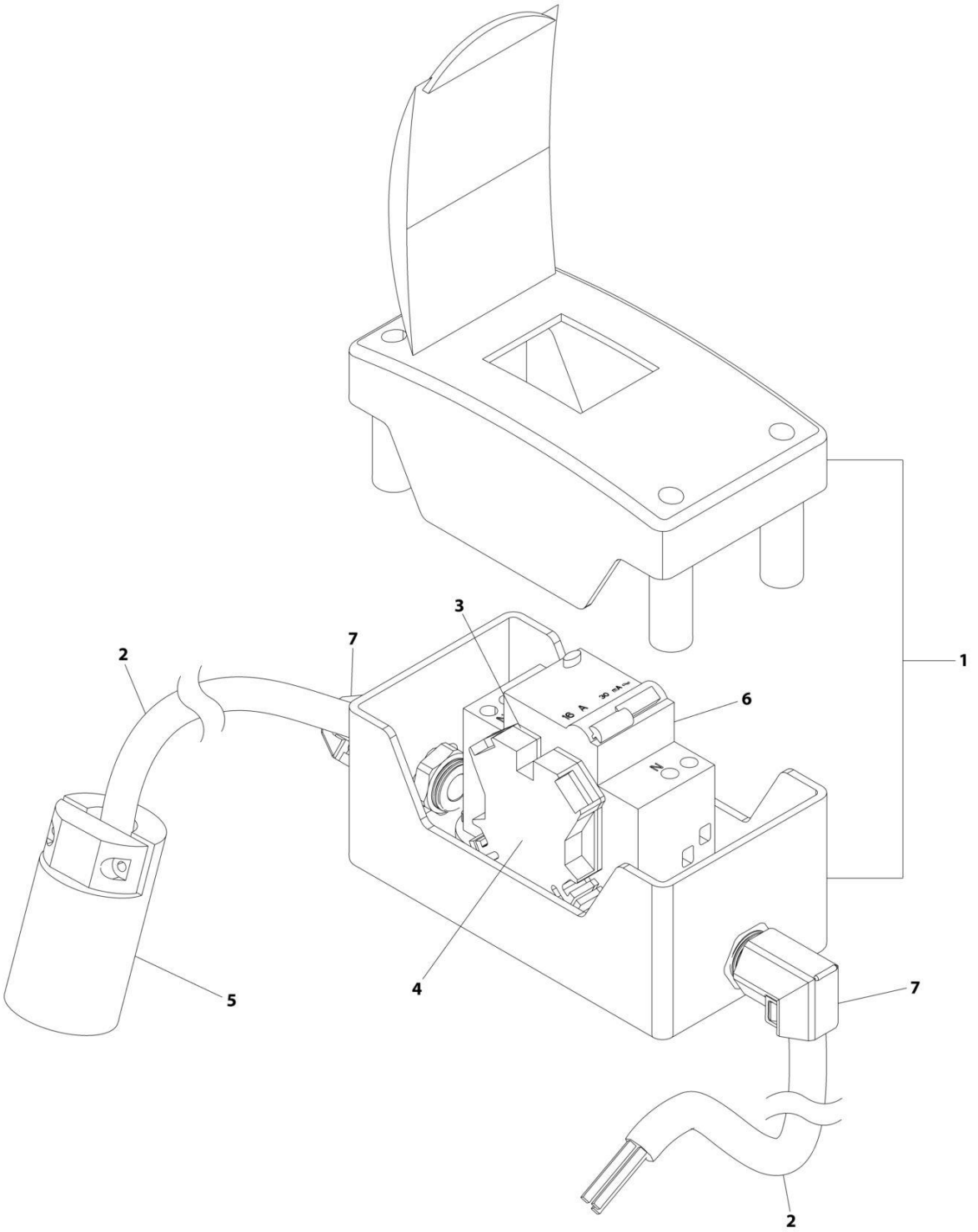

FIGURE 7-11. BREAKER BOX KIT WITH 1 DOUBLE BREAKER (CE & UK CA SPECS)

ITEM	PART NUMBER	QTY	DESCRIPTION	REV
	1001209776	Ref	BREAKER BOX KIT WITH 1 DOUBLE BREAKER	F
1	0861880	1	Box	
2	1060908	126 in /3.2m	Cable, 12/3	
3	4460956	1	Barrier, Terminal	
4	4460957	1	Block, Terminal	
5	1001120205	1	Connector, Female Twist	
6	1001181045	1	Breaker 30mAmp/16 Amp	
7	1001217164	2	Connector, Strain Relief 90	

FIGURE 7-12. BREAKER BOX KIT WITH 3 BREAKERS (CE & UK CA SPECS)

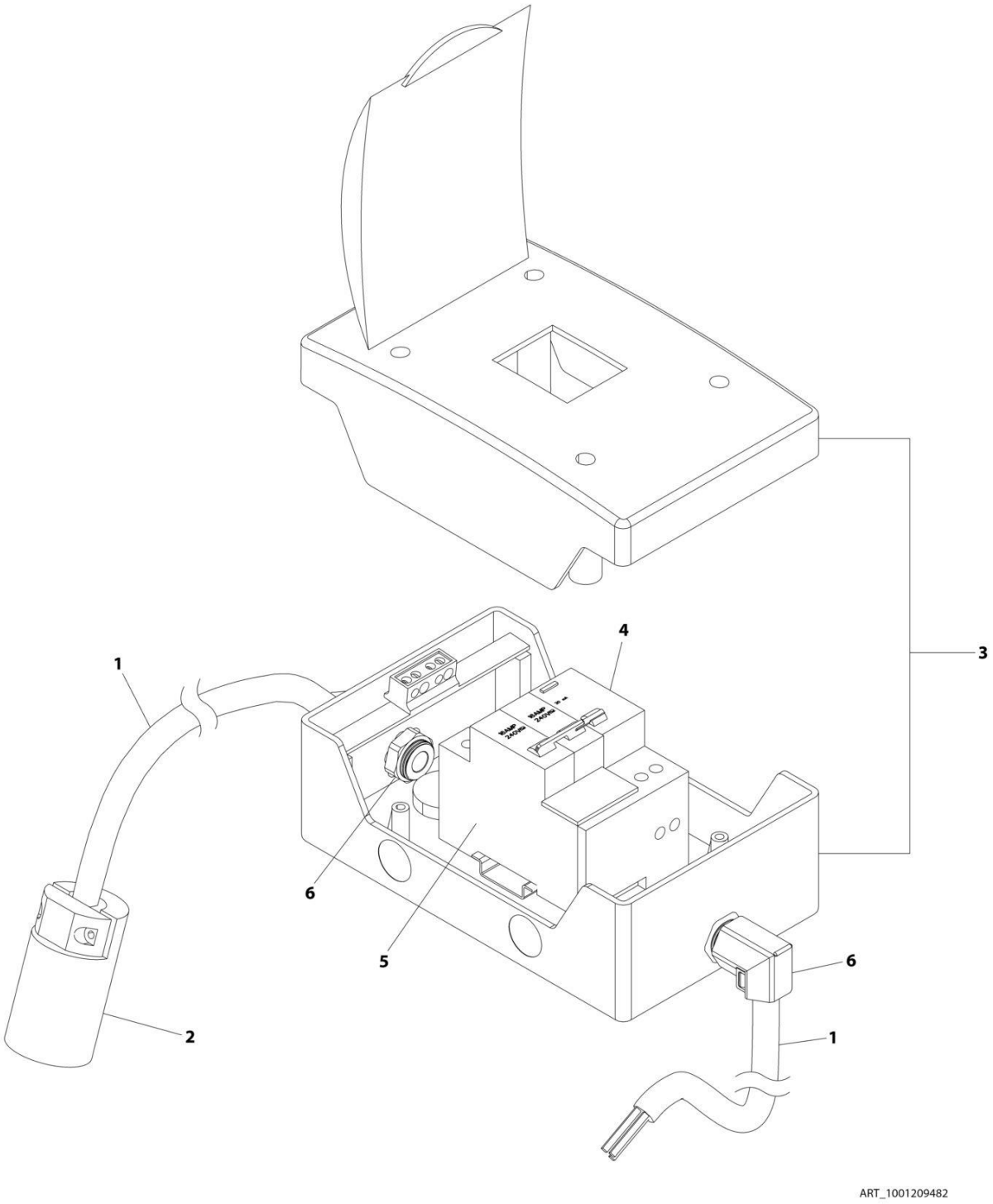

FIGURE 7-12. BREAKER BOX KIT WITH 3 BREAKERS (CE & UK CA SPECS)

ITEM	PART NUMBER	QTY	DESCRIPTION	REV
	1001209482	Ref	BREAKER BOX KIT WITH 3 BREAKERS	G
1	1060908	126 in /3.2m	Cable, 12/3	
2	1001120205	1	Connector, Female Twist	
3	1001152483	1	Box	
4	1001189171	1	Breaker, 30mAmp	
5	1001189172	1	Breaker 16 Amp, Double	
6	1001217164	2	Connector, Strain Relief 90	

FIGURE 7-13. CAN SPLICE HARNESS (CHARGER WITH COMMUNICATION PORT)

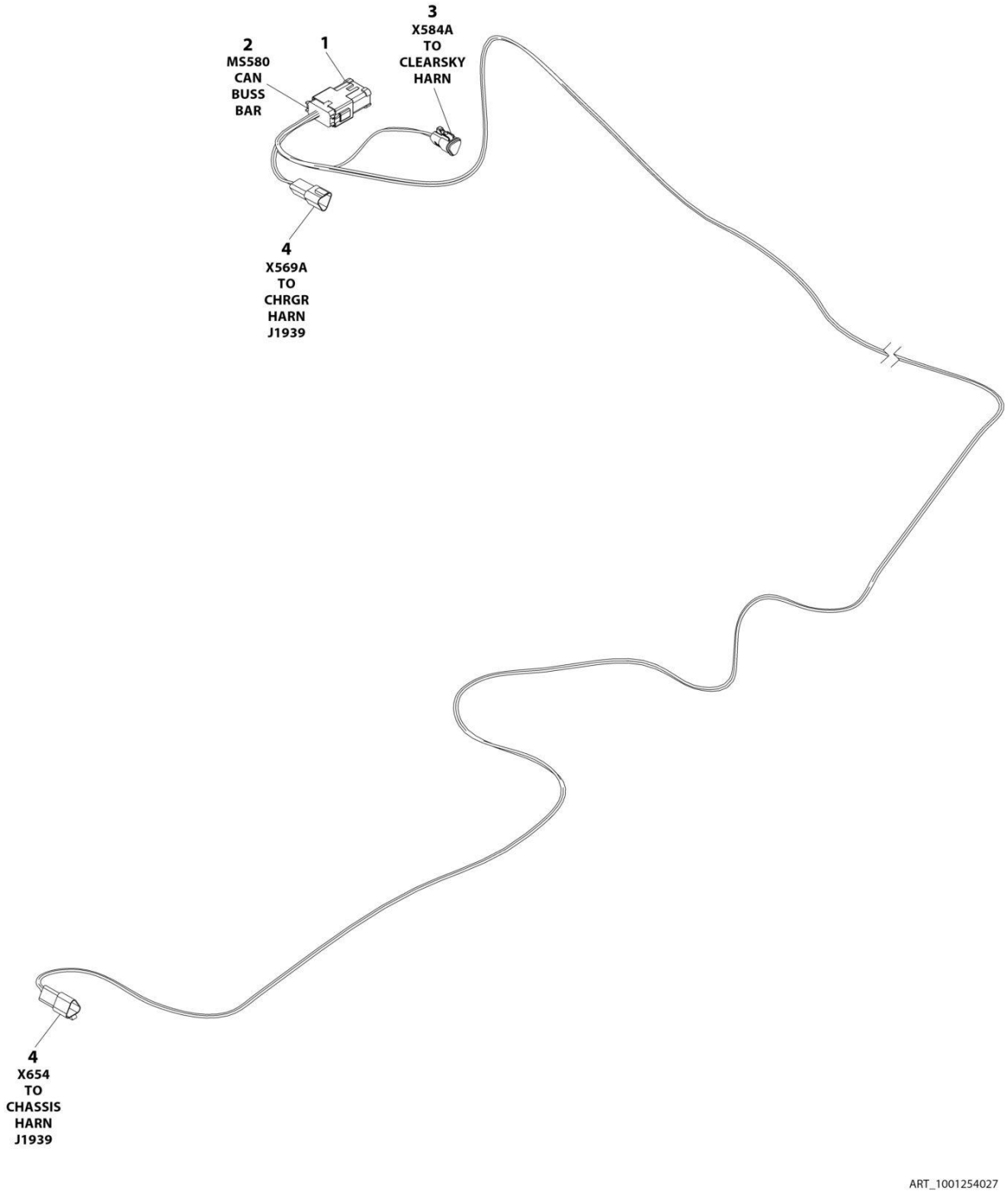

FIGURE 7-13. CAN SPLICE HARNESS (CHARGER WITH COMMUNICATION PORT)

ITEM	PART NUMBER	QTY	DESCRIPTION	REV
	1001254027	Ref	CAN SPLICE HARNESS	A
1	1001125677	1	Connector, Bus Bar - 12 Position	
2	4460933	1	Plug, Male - 12 Position	
2	4460944	6	Socket, Female	
2	4460466	6	Plug, Terminal	
3	1001118812	1	Plug, Male - 3 Position	
3	4460944	2	Socket, Female	
3	4460466	1	Plug, Terminal	
4	1001144147	2	Receptacle, Female - 3 Position	
4	4460943	4	Pin, Male	
4	4460466	2	Plug, Terminal	

FIGURE 7-14. CHARGER HARNESS (CHARGER WITH COMMUNICATION PORT)

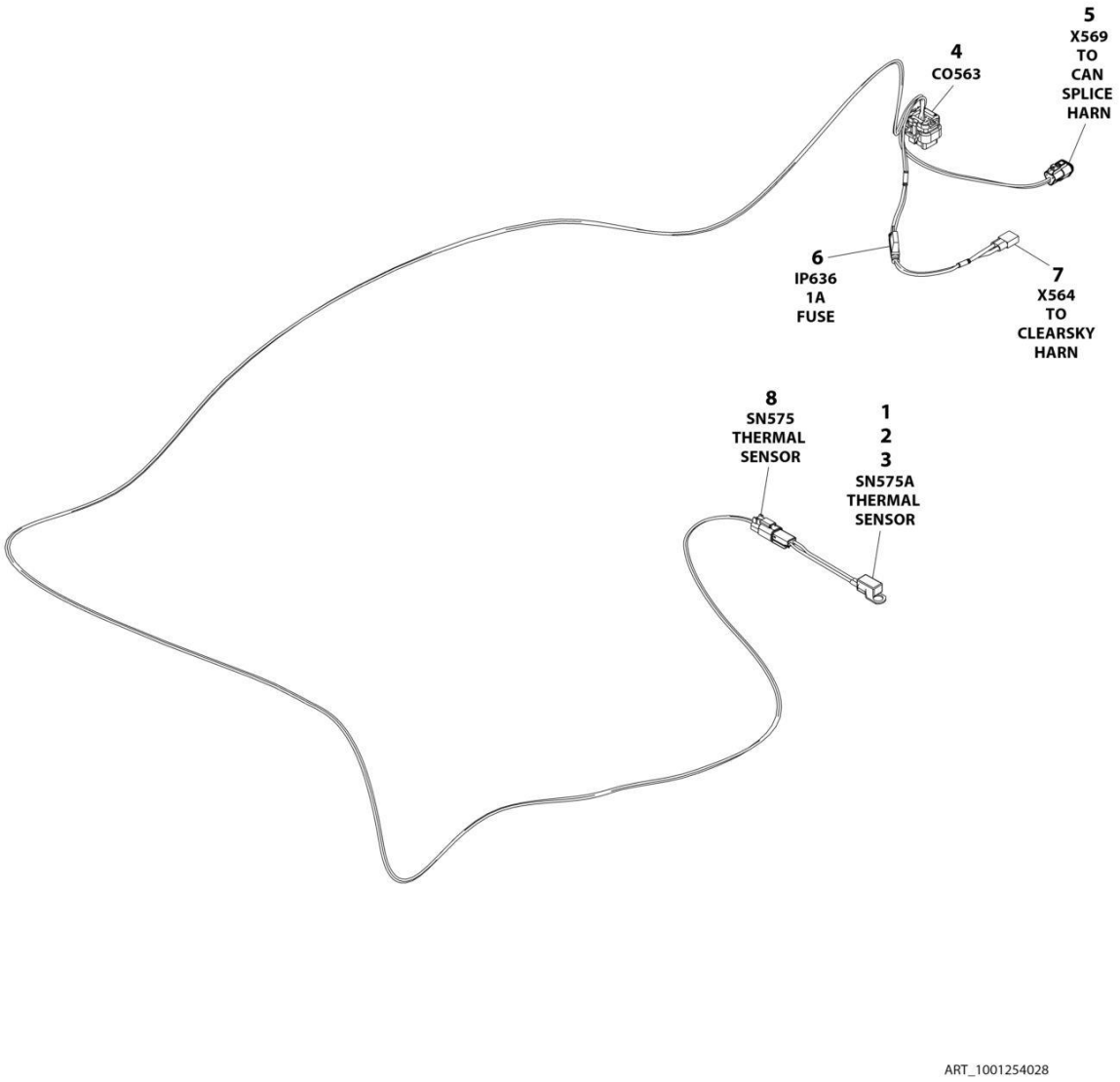

FIGURE 7-14. CHARGER HARNESS (CHARGER WITH COMMUNICATION PORT)

ITEM	PART NUMBER	QTY	DESCRIPTION	REV
	1001254028	Ref	CHARGER HARNESS	A
1	4460464	2	Pin, Male	
2	4460897	1	Receptacle, Female - 2 Position	
3	1001102771	1	Sensor, Temperature	
4	4460872	1	Connector - 14 Position	
4	4460871	6	Terminal	
4	4460905	8	Plug, Terminal	
5	1001116812	1	Plug, Male - 3 Position	
5	4460944	2	Socket, Female	
5	4460466	1	Plug, Terminal	
6	2400060	1	Fuseholder With Cover	
6	1001228388	1	Fuse 1A	
7	4460424	1	Receptacle, Female - 2 Position	
7	4460227	2	Pin, Male	
8	4460891	1	Plug, Male - 2 Position	
8	4460465	2	Socket, Female	

FIGURE 7-15. CHARGER HARNESS (CHARGER WITH COMMUNICATION PORT)

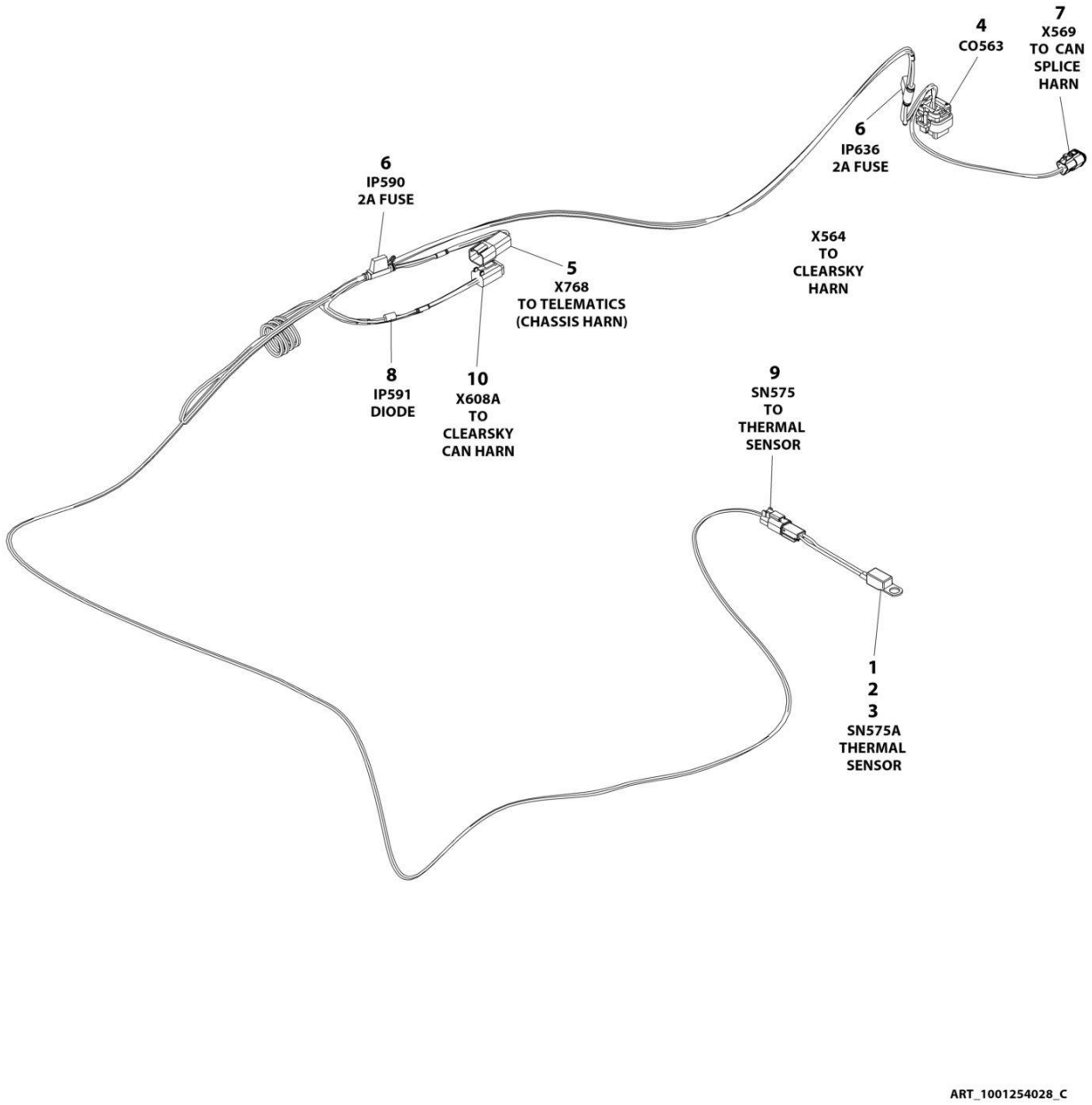

FIGURE 7-15. CHARGER HARNESS (CHARGER WITH COMMUNICATION PORT)

ITEM	PART NUMBER	QTY	DESCRIPTION	REV
	1001254028	Ref	CHARGER HARNESS	C
1	4460464	2	Pin, Male	
2	4460897	1	Receptacle, Female - 2 Position	
3	1001102771	1	Sensor, Temperature	
4	4460872	1	Connector - 14 Position	
4	4460871	6	Terminal	
4	4460905	8	Plug, Terminal	
5	4460932	1	Receptacle, Female - 4 Position	
5	4460464	1	Pin, Male	
6	2400060	2	Fuseholder With Cover	
6	1001196634	2	Fuse 2A	
7	1001116812	1	Plug, Male - 3 Position	
7	4460944	2	Socket, Female	
7	4460466	1	Plug, Terminal	
8	3990001	1	Diode	
9	4460891	1	Plug, Male - 2 Position	
9	4460465	2	Socket, Female	
10	4460884	1	Plug, Male - 4 Position	
10	4460465	4	Socket, Female	

FIGURE 7-16. CHARGER PLUG INSTALLATION (NO PLUG)

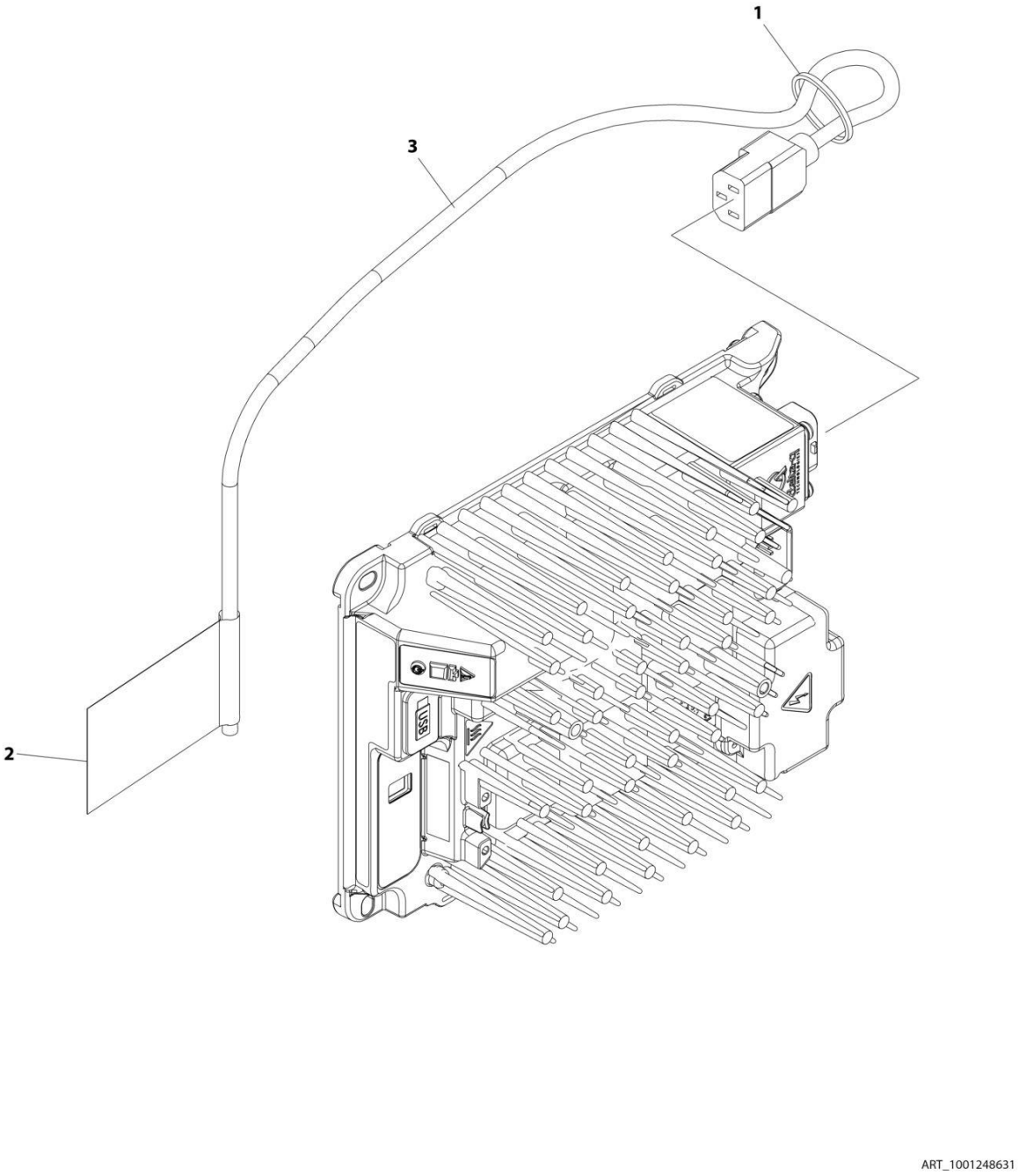

FIGURE 7-16. CHARGER PLUG INSTALLATION (NO PLUG)

ITEM	PART NUMBER	QTY	DESCRIPTION	REV
	1001248631	Ref	CHARGER PLUG INSTALLATION	B
1	4240017	AR	Tie-Strap	
2	1001102489	1	Decal - Charger	
3	1001207974	1	Cable, Charger Plug (No Plug)	

FIGURE 7-17. CHARGER PLUG INSTALLATION (110V PLUG)

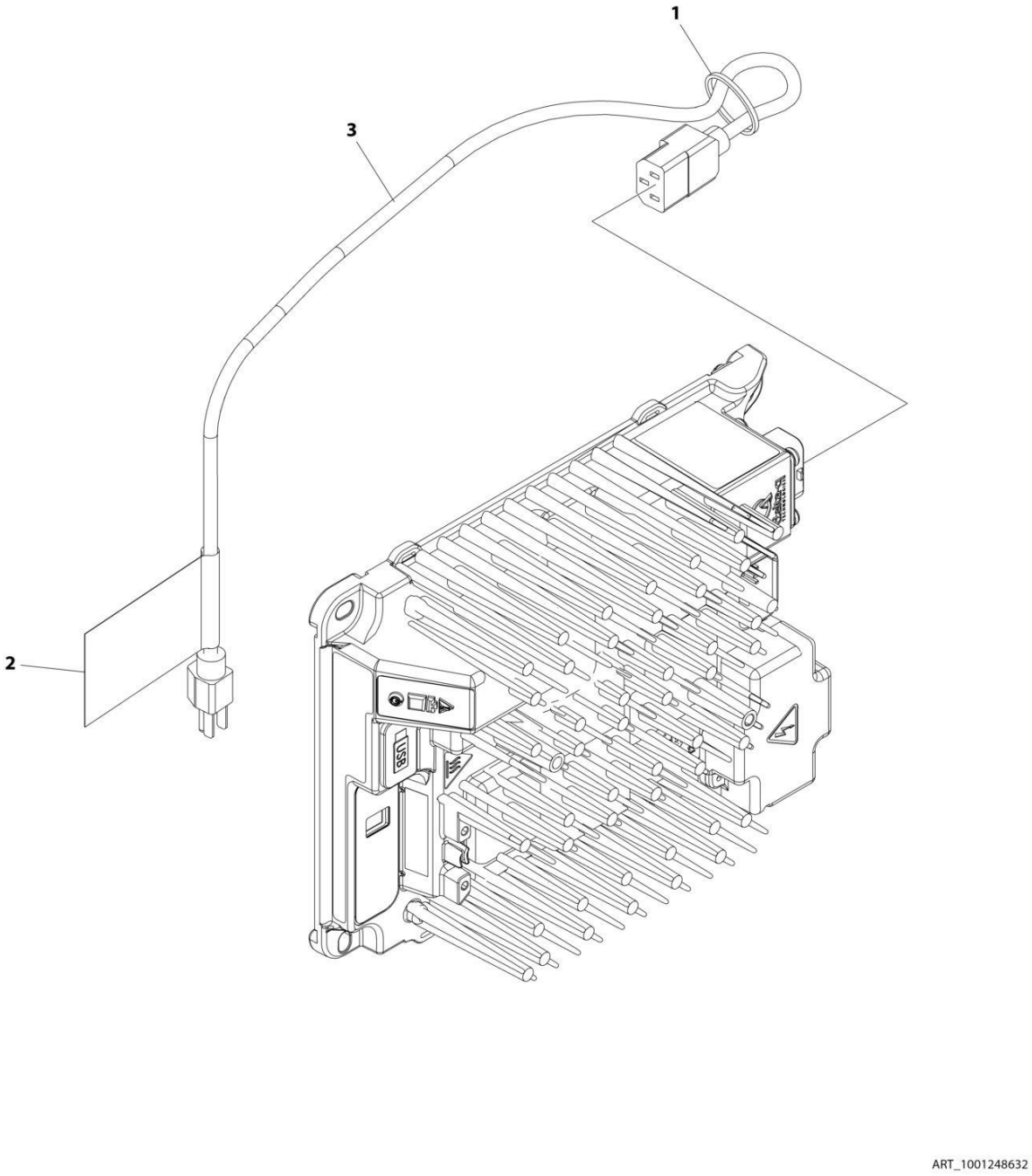

FIGURE 7-17. CHARGER PLUG INSTALLATION (110V PLUG)

ITEM	PART NUMBER	QTY	DESCRIPTION	REV
	1001248632	Ref	CHARGER PLUG INSTALLATION	B
1	4240017	AR	Tie-Strap	
2	1001102489	1	Decal - Charger	
3	1001207970	1	Cable, Charger Plug	

FIGURE 7-18. CHARGER PLUG INSTALLATION (KOREAN PLUG)

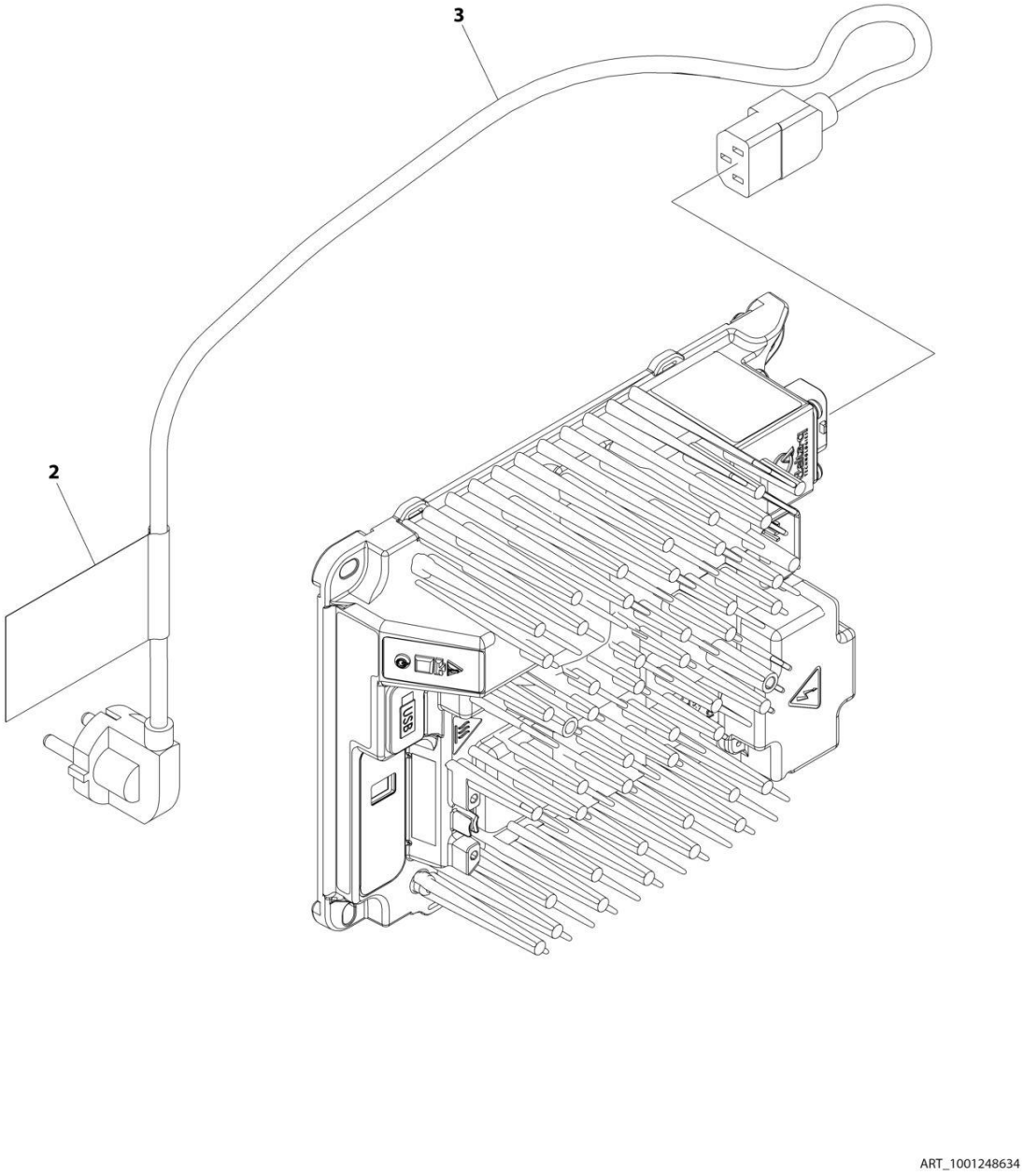

FIGURE 7-18. CHARGER PLUG INSTALLATION (KOREAN PLUG)

ITEM	PART NUMBER	QTY	DESCRIPTION	REV
	1001248634	Ref	CHARGER PLUG INSTALLATION	A
1	4240017	AR	Tie-Strap (Not Shown)	
2	1001102489	1	Decal - Charger Label	
3	1001221949	1	Cable, Charger AC Input	

FIGURE 7-19. CHARGER PLUG INSTALLATION (CEE7 PLUG)

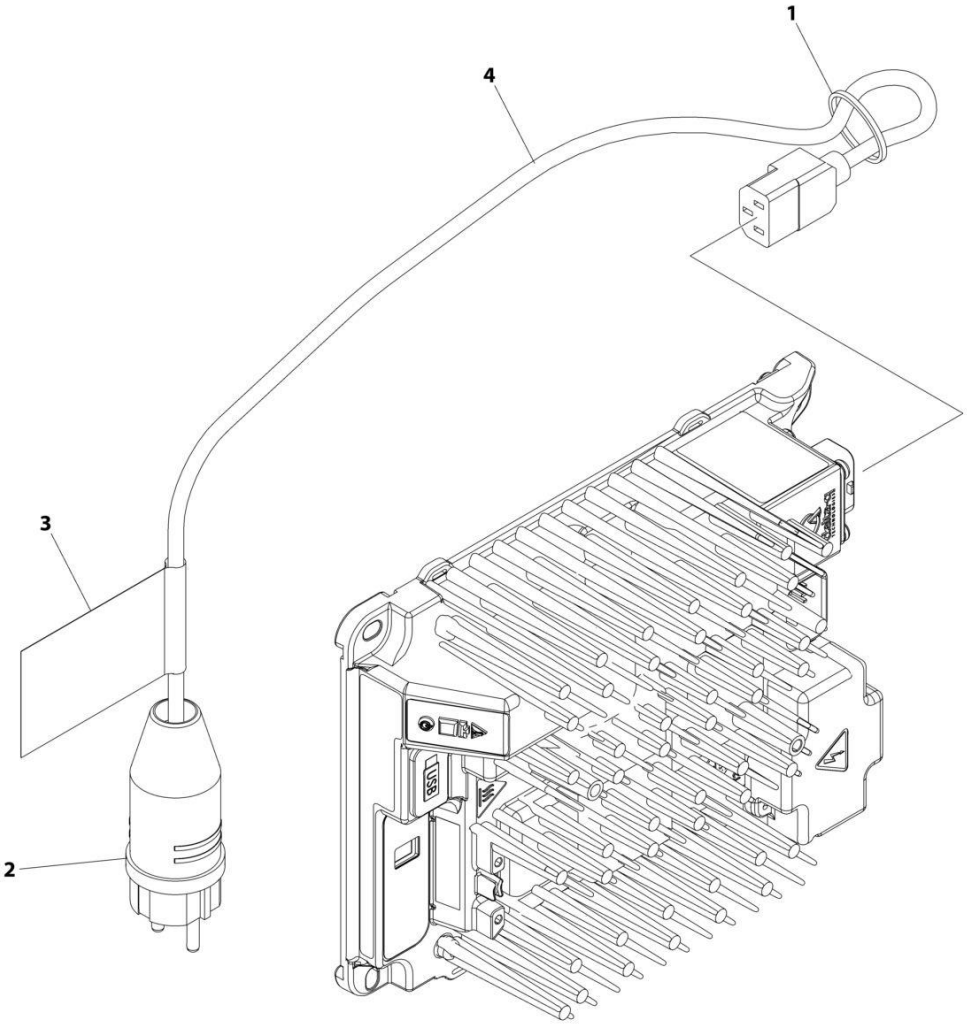

FIGURE 7-19. CHARGER PLUG INSTALLATION (CEE7 PLUG)

ITEM	PART NUMBER	QTY	DESCRIPTION	REV
	1001258768	Ref	CHARGER PLUG INSTALLATION	A
1	4240017	AR	Tie-Strap	
2	4461205	1	Terminal	
3	1001102489	1	Decal - Charger	
4	1001207974	1	Cable, Charger Plug (No Plug)	

FIGURE 7-20. CHARGER PLUG INSTALLATION (AFSINT 107 PLUG)

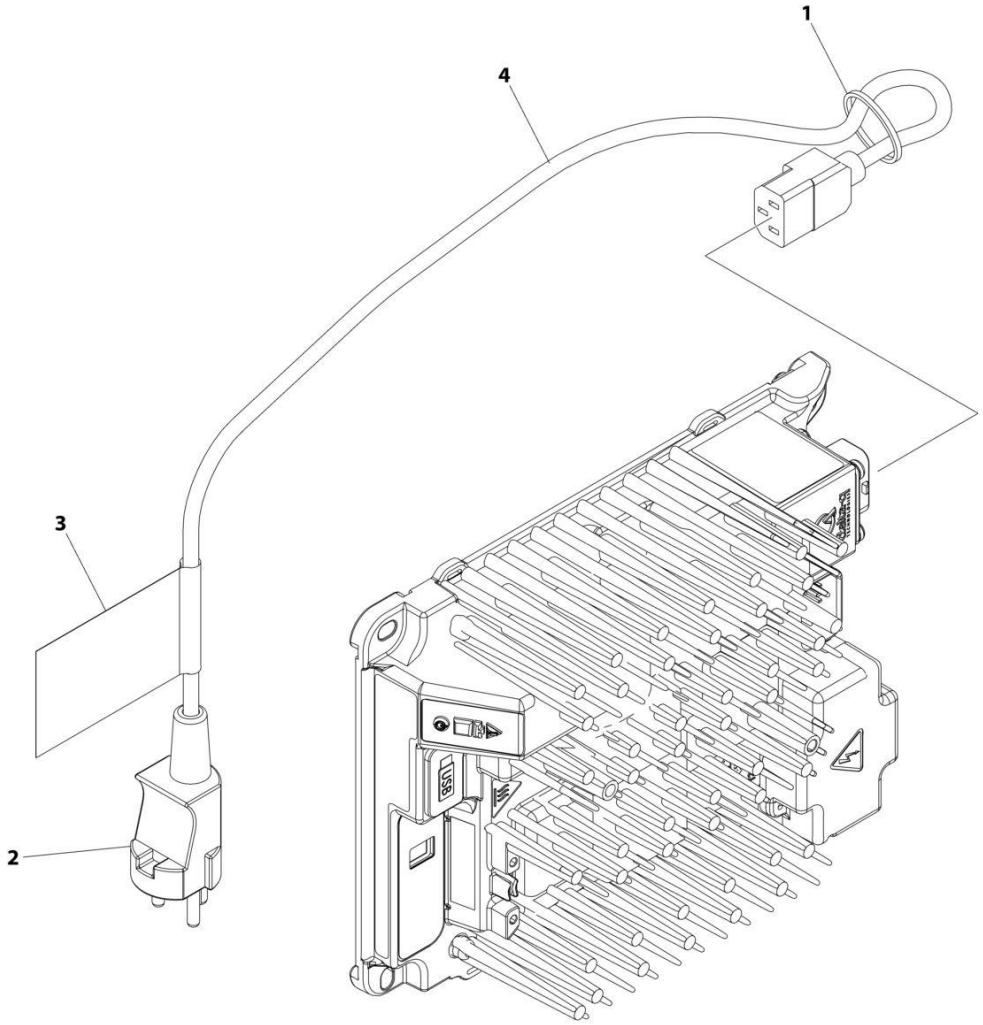

FIGURE 7-20. CHARGER PLUG INSTALLATION (AFSINT 107 PLUG)

ITEM	PART NUMBER	QTY	DESCRIPTION	REV
	1001258770	Ref	CHARGER PLUG INSTALLATION	A
1	4240017	AR	Tie-Strap	
2	4461249	1	Terminal	
3	1001102489	1	Decal - Charger	
4	1001207974	1	Cable, Charger Plug (No Plug)	

FIGURE 7-21. CHARGER PLUG INSTALLATION (IEC YELLOW PLUG)

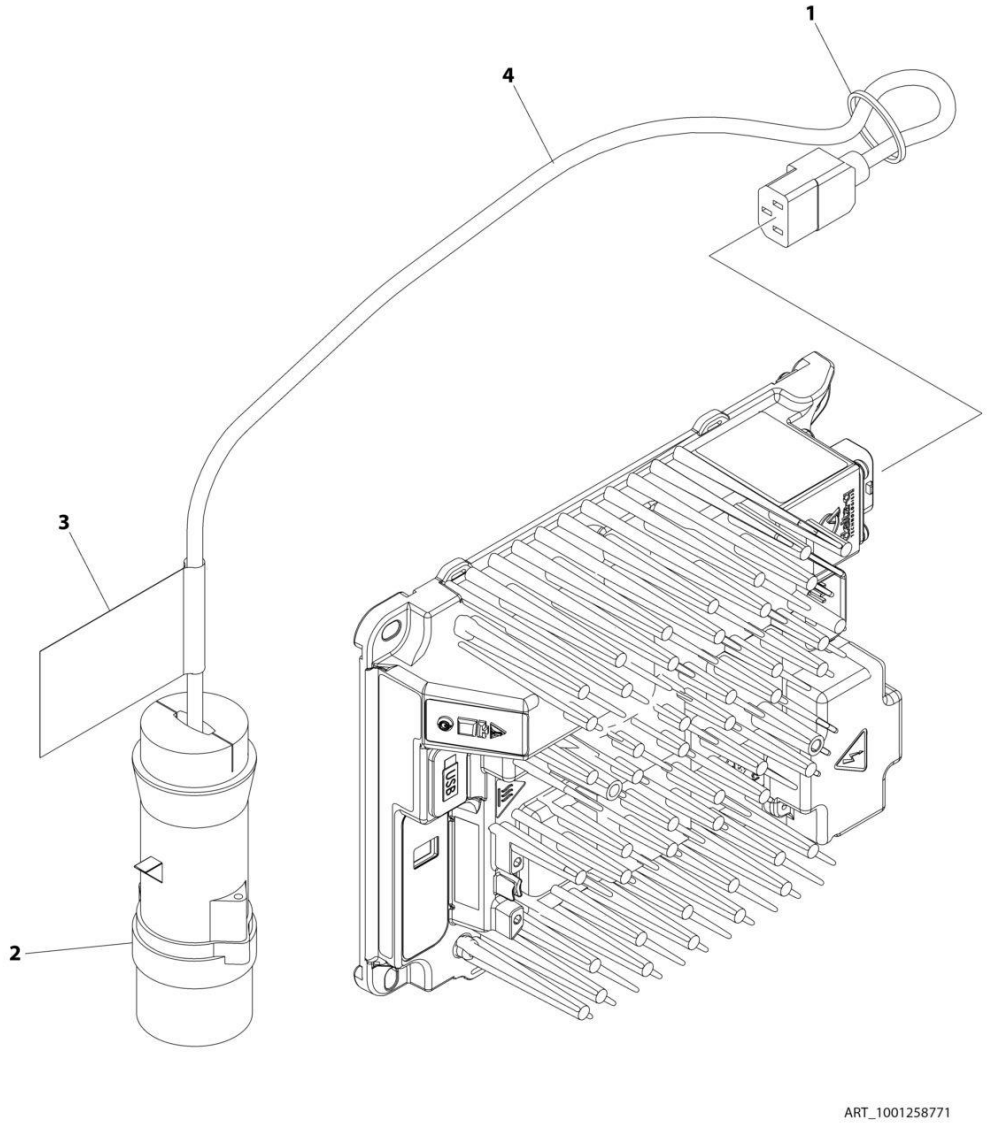

FIGURE 7-21. CHARGER PLUG INSTALLATION (IEC YELLOW PLUG)

ITEM	PART NUMBER	QTY	DESCRIPTION	REV
	1001258771	Ref	CHARGER PLUG INSTALLATION	A
1	4240017	AR	Tie-Strap	
2	4461196	1	Terminal	
3	1001102489	1	Decal - Charger	
4	1001207974	1	Cable, Charger Plug (No Plug)	

FIGURE 7-22. CHARGER PLUG INSTALLATION (IEC BLUE PLUG)

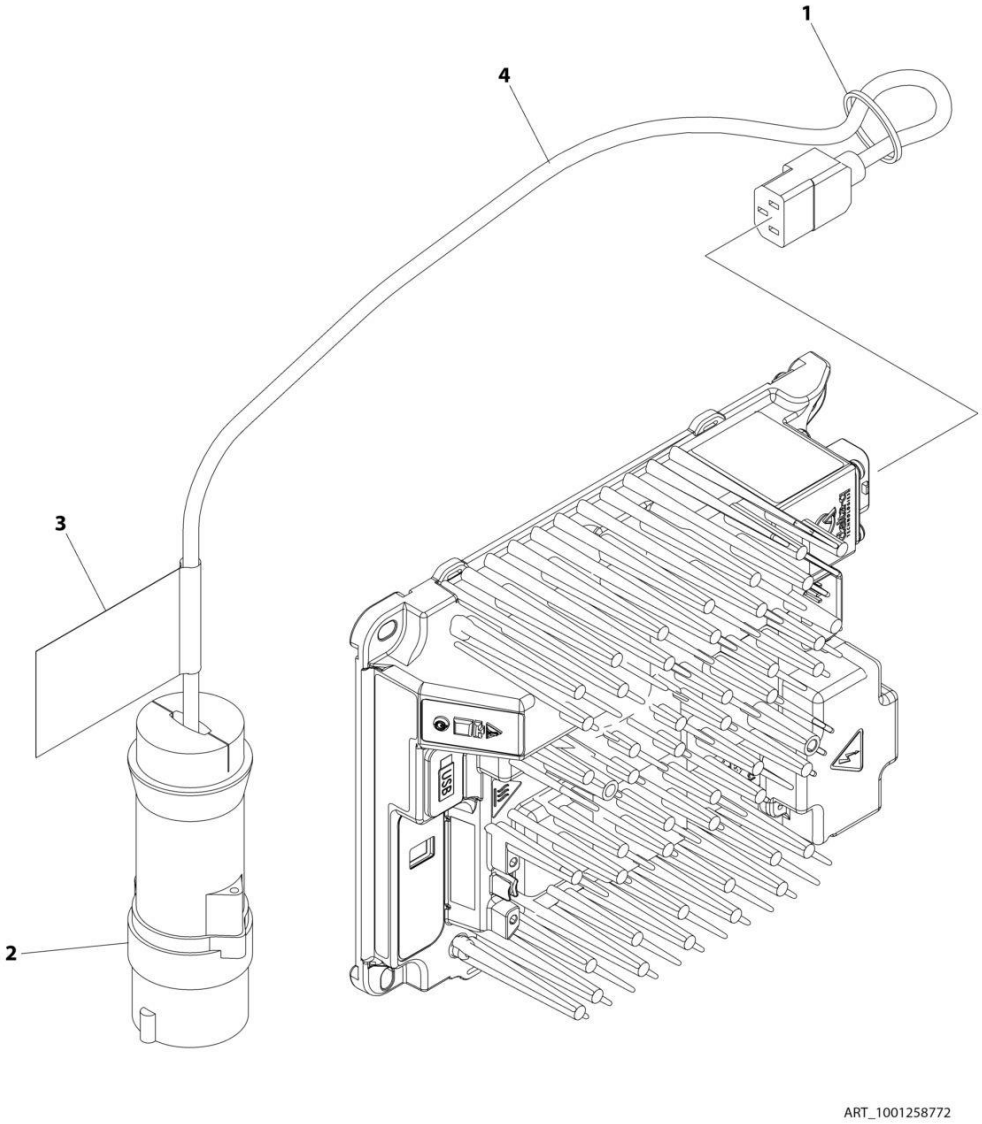

FIGURE 7-22. CHARGER PLUG INSTALLATION (IEC BLUE PLUG)

ITEM	PART NUMBER	QTY	DESCRIPTION	REV
	1001258772	Ref	CHARGER PLUG INSTALLATION	A
1	4240017	AR	Tie-Strap	
2	4461199	1	Terminal	
3	1001102489	1	Decal - Charger	
4	1001207974	1	Cable, Charger Plug (No Plug)	

FIGURE 7-23. CHARGER PLUG INSTALLATION (CHINA PLUG)

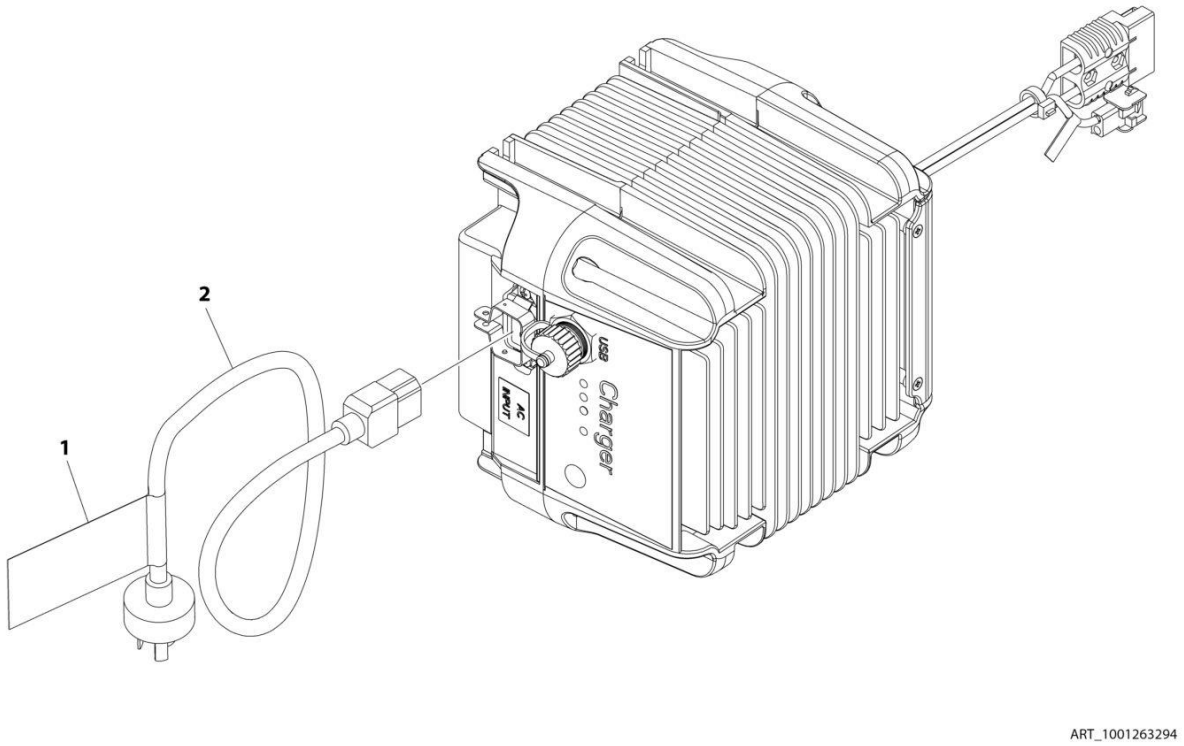

FIGURE 7-23. CHARGER PLUG INSTALLATION (CHINA PLUG)

ITEM	PART NUMBER	QTY	DESCRIPTION	REV
	1001263294	Ref	CHARGER PLUG INSTALLATION	A
1	1001102489	1	Decal - Charger Label	
2	1001207973	1	Cable, Charger AC Input	

FIGURE 7-24. CHARGER PLUG INSTALLATION (AUSTRALIAN PLUG)

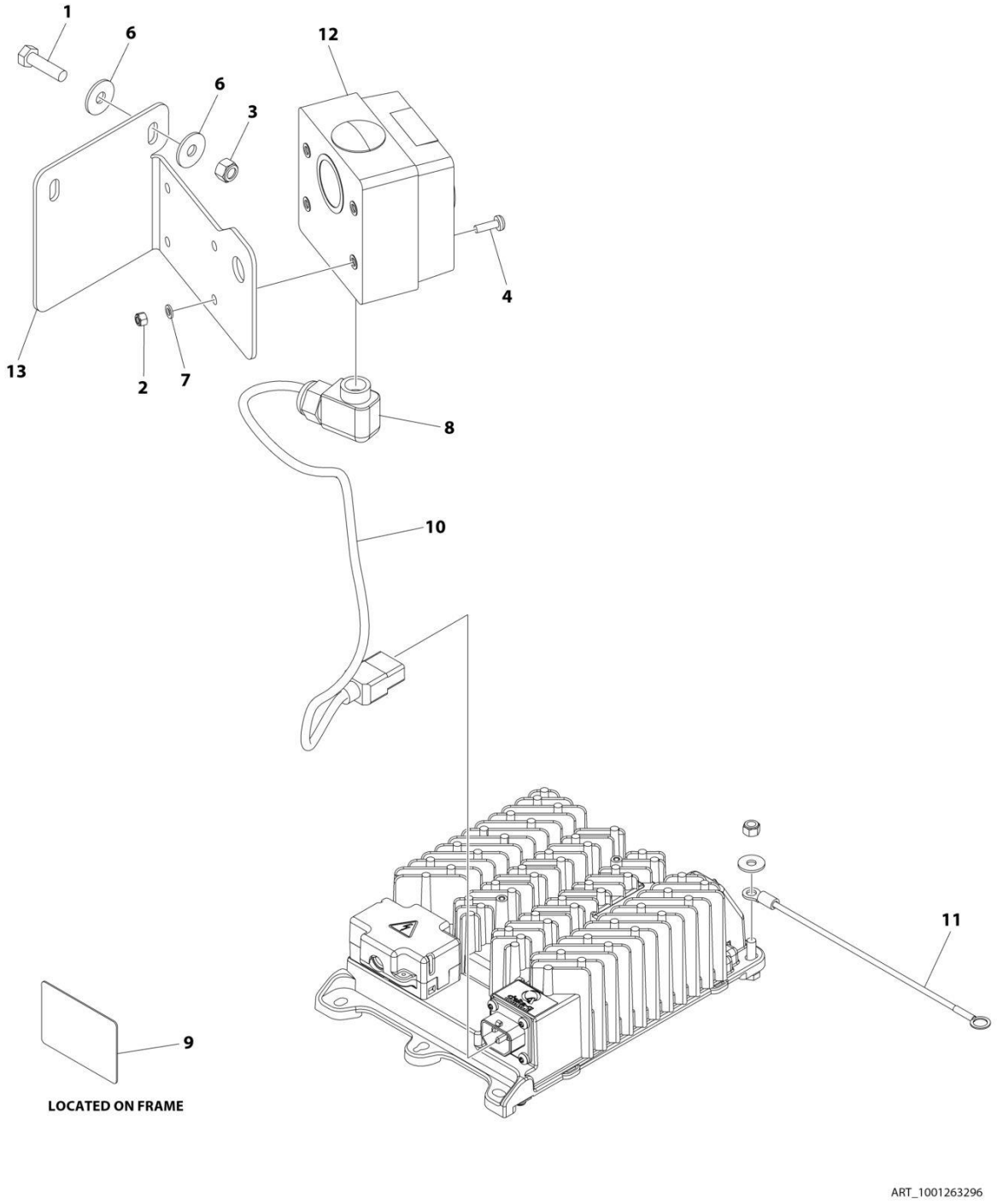

FIGURE 7-24. CHARGER PLUG INSTALLATION (AUSTRALIAN PLUG)

ITEM	PART NUMBER	QTY	DESCRIPTION	REV
	1001263296	Ref	CHARGER PLUG INSTALLATION	A
1	0700814	2	Bolt M8 x 30	
2	3290505	4	Nut M5	
3	3290805	2	Nut M8	
4	3900381	4	Screw M5 x 16	
5	4240017	AR	Tie-Strap (Not Shown)	
6	4811902	4	Washer M8	
7	4831600	4	Washer M5	
8	1001103471	1	Connector Strain Relief 90	
9	1001134280	1	Decal - Charger	
10	1001207974	1	Cable, Charger AC Input	
11	1001227219	1	Ground Harness	
12	1001227267	1	Receptacle Australian - 230V	
13	1001244644	1	Bracket	

FIGURE 7-25. CHASSIS HARNESS

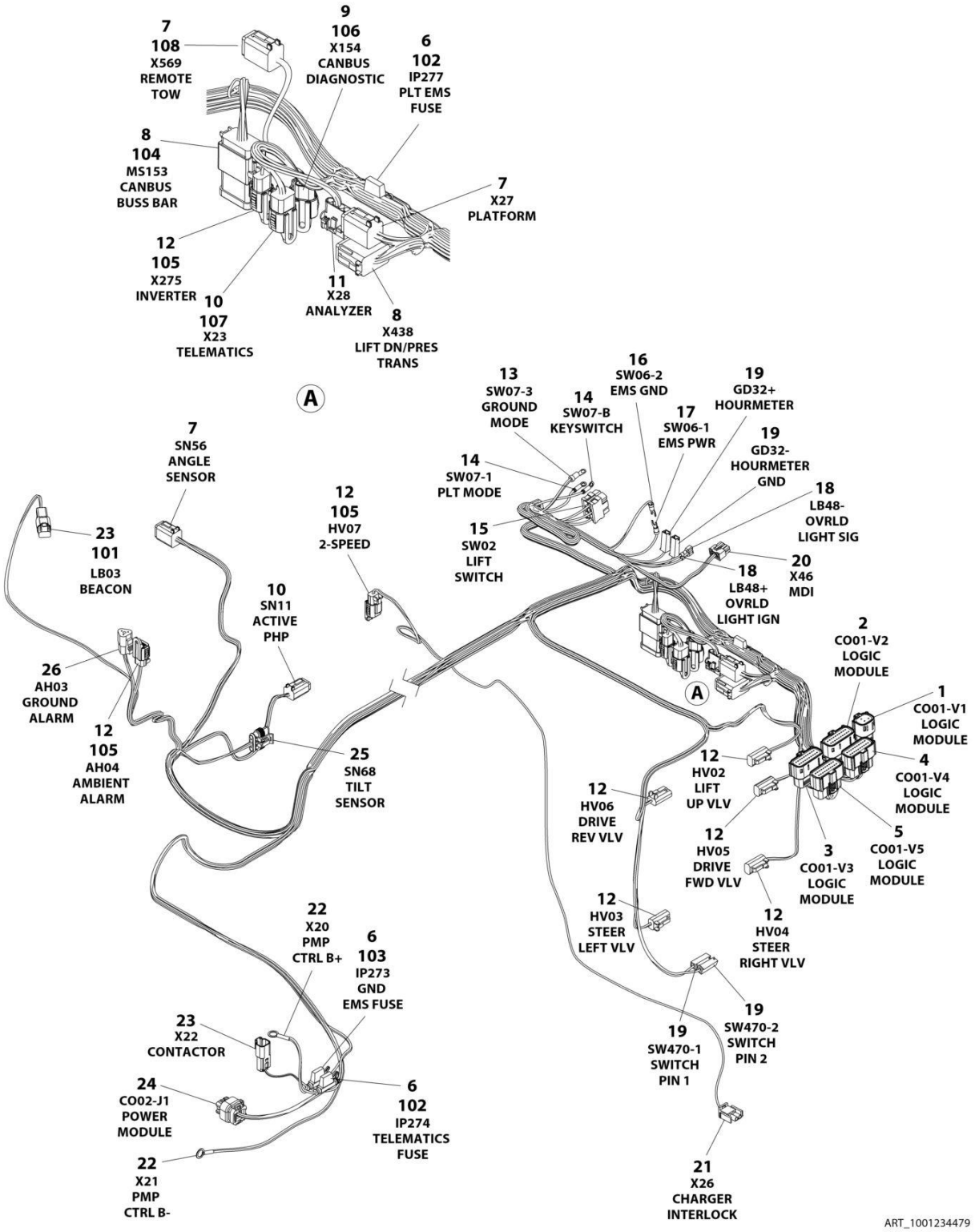

FIGURE 7-25. CHASSIS HARNESS

ITEM	PART NUMBER	QTY	DESCRIPTION	REV
	1001234479	Ref	CHASSIS HARNESS	D
1	1001205409	1	Connector - 8 Position	
1	1001162887	6	Terminal	
1	1001163340	2	Plug, Terminal	
2	1001205410	1	Connector - 20 Position	
2	1001162887	12	Terminal	
2	1001163340	8	Plug, Terminal	
3	1001162886	1	Connector - 20 Position	
3	1001162887	16	Terminal	
3	1001163340	4	Plug, Terminal	
4	1001205411	1	Connector - 20 Position	
4	1001162887	16	Terminal	
4	1001163340	4	Plug, Terminal	
5	1001205412	1	Connector - 20 Position	
5	1001162887	18	Terminal	
5	1001163340	2	Plug, Terminal	
6	2400060	3	Holder/Cover, Fuse	
7	4460894	3	Plug, Male - 6 Position	
7	4460465	14	Socket, Female	
7	4460944	2	Socket, Female	
7	4460466	2	Plug, Terminal	
8	4460933	2	Plug, Male - 12 Position	
8	4460465	22	Socket, Female	
8	4460466	2	Plug, Terminal	
9	1001116812	1	Receptacle, Female - 3 Position	
9	4060944	2	Socket, Female	
9	4460466	1	Plug, Terminal	
10	4460884	2	Plug, Male - 4 Position	
10	4460465	8	Socket, Female	
11	4460761	1	Plug, Male - 4 Position	
11	4460227	4	Socket, Female	
12	4460891	8	Plug, Male - 2 Position	
12	4460465	16	Socket, Female	
12	4460466	1	Plug, Terminal	
13	4460042	1	Terminal, Ring	
14	4460247	2	Terminal, Ring	
15	4460418	1	Connector - 6 Position	
15	1001159186	3	Terminal	
16	4460115	1	Terminal, Ring	
17	4460183	1	Terminal, Ring	
18	1001201885	2	Terminal	
19	4460260	4	Cover, Terminal	
16	4460259	4	Terminal	
20	1001151629	1	Plug, Male - 8 Position	
20	4461023	2	Terminal	
20	4460877	2	Terminal	
21	4460320	1	Plug, Male - 2 Position	
21	4460226	1	Socket, Female	
22	4460256	2	Terminal	
23	4460897	2	Receptacle, Female - 2 Position	

ITEM	PART NUMBER	QTY	DESCRIPTION	REV
23	4460464	4	Pin, Male	
24	1001113961	1	Connector - 8 Position	
24	4460871	4	Socket, Female	
24	4460905	4	Plug, Terminal	
25	1001103012	1	Plug, Male - 4 Position	
25	1001196589	4	Terminal	
25	1001104498	4	Seal Terminal	
26	4460539	1	Plug, Male - 3 Position	
26	4460465	3	Socket, Female	
101	4460891	1	Plug, Male - 4 Position	
102	8229242	2	Fuse 5 Amp	
103	8229244	1	Fuse, 15 Amp	
104	1001125677	1	Connector, Bussbar	
105	1001144295	3	Cap - 2 Position	
106	1001144296	1	Cap - 3 Position	
107	1001192401	1	Cap, Dust	
108	1001213448	1	Connector, Dust Cap	

FIGURE 7-26. GROUND TO PLATFORM CABLE INSTALLATION - WITHOUT PLATFORM COIL CABLE (MACHINES WITH SN STARTING WITH 12, B2 & G2)

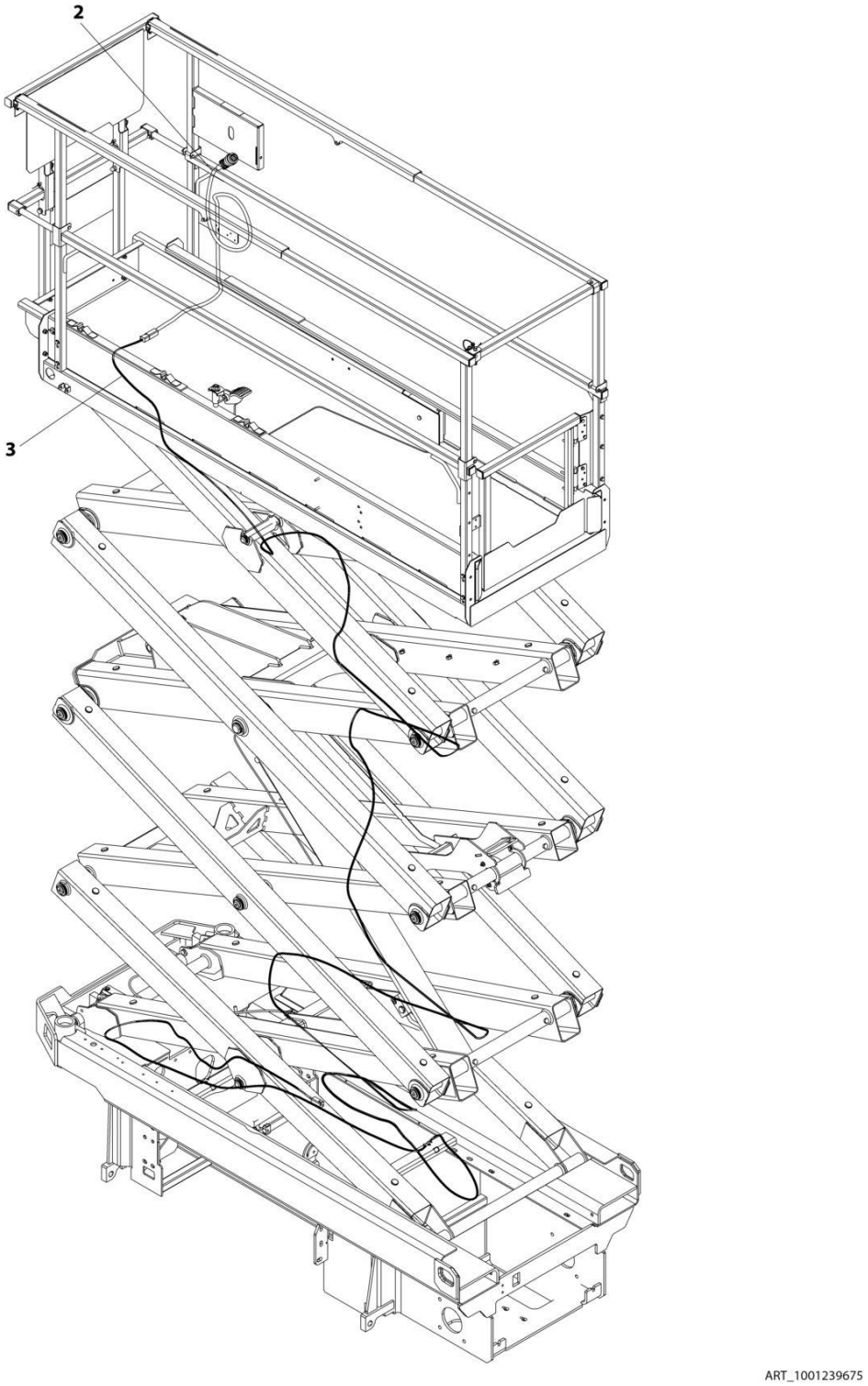

FIGURE 7-26. GROUND TO PLATFORM CABLE INSTALLATION - WITHOUT PLATFORM COIL CABLE (MACHINES WITH SN STARTING WITH 12, B2 & G2)

ITEM	PART NUMBER	QTY	DESCRIPTION	REV
	1001239675	Ref	GROUND TO PLATFORM CABLE INSTALLATION - WITHOUT PLATFORM COIL CABLE	F
1	4240017	AR	Tie-Strap (Not Shown)	
2	1001200812	1	Platform Harness	
2	4460899	1	Receptacle, Female - 6 Position (To Item 3)	
2	4460464	4	Pin, Male	
2	4460943	2	Pin, Male	
2	4460754	1	Connector - 14 Position (To Console Box)	
2	4460465	8	Socket, Female	
2	4460466	6	Plug, Terminal	
3	1001237132	1	Cable Assembly - Ground to Platform	
3	4460894	1	Plug, Male - 6 Position (To Platform Harness Item 2)	
3	4460465	4	Socket, Female	
3	4460944	2	Socket, Female	
3	4460899	1	Receptacle, Female - 6 Position (To Chassis Harness)	
3	4460464	4	Pin, Male	
3	4460943	2	Pin, Male	

FIGURE 7-27. GROUND TO PLATFORM CABLE INSTALLATION - WITHOUT PLATFORM COIL CABLE & WITH FOOTSWITCH (MACHINES WITH SN STARTING WITH 12, B2 & G2)

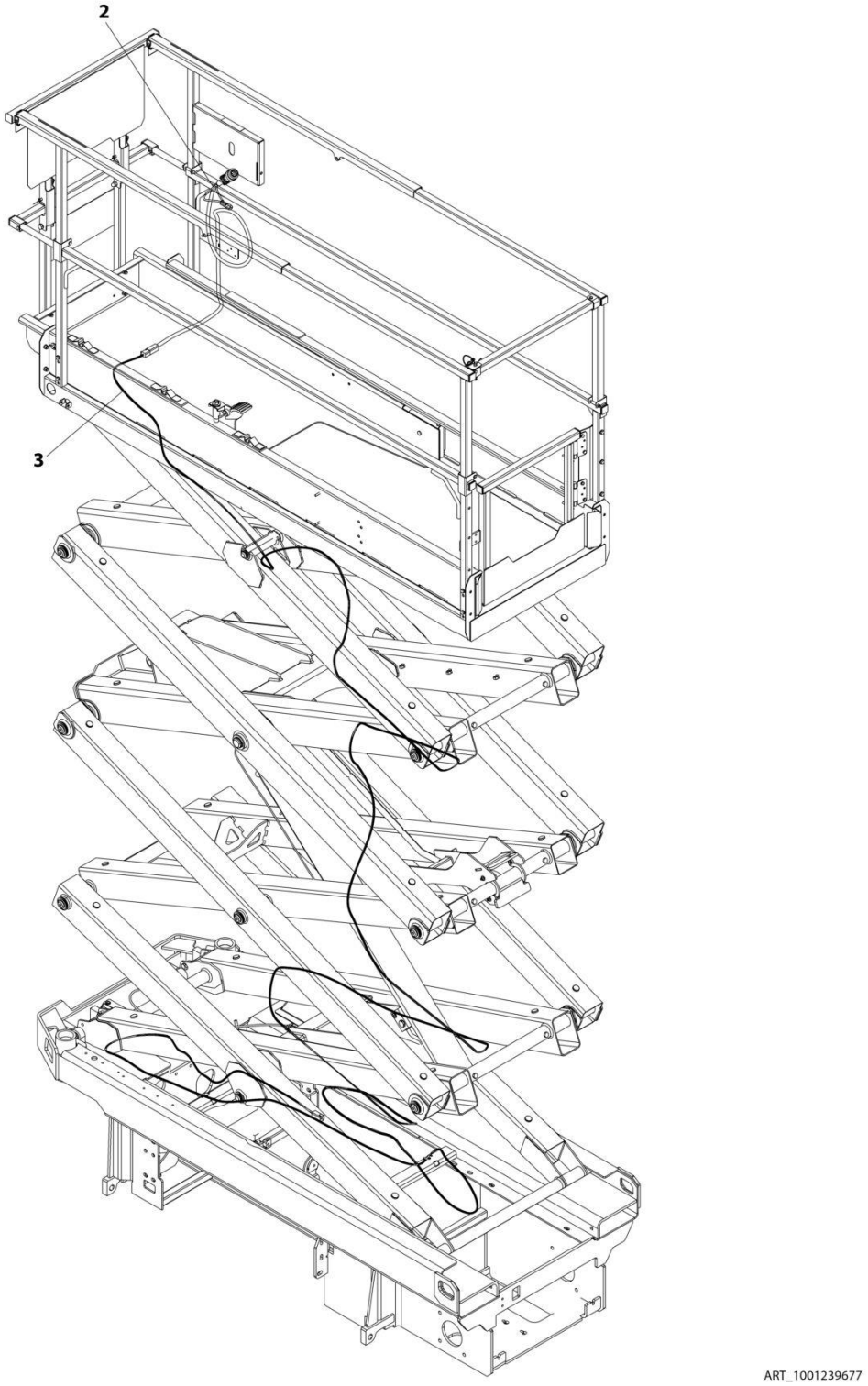

FIGURE 7-27. GROUND TO PLATFORM CABLE INSTALLATION - WITHOUT PLATFORM COIL CABLE & WITH FOOTSWITCH (MACHINES WITH SN STARTING WITH 12, B2 & G2)

ITEM	PART NUMBER	QTY	DESCRIPTION	REV
	1001239677	Ref	GROUND TO PLATFORM CABLE INSTALLATION - WITHOUT PLATFORM COIL CABLE AND WITH FOOTSWITCH	F
1	4240017	AR	Tie-Strap (Not Shown)	
2	1001223263	1	Platform Harness	
2	4460899	1	Receptacle, Female - 6 Position (To Item 3)	
2	4460464	4	Pin, Male	
2	4460943	2	Pin, Male	
2	4460754	1	Connector - 14 Position (To Console Box)	
2	4460465	8	Socket, Female	
2	4460944	2	Socket, Female	
2	4460466	4	Plug, Terminal	
2	4460891	1	Plug, Male - 2 Position (To Footswitch)	
2	4460465	2	Socket, Female	
2	4460897	1	Receptacle, Female - 2 Position (Footswitch Jumper)	
2	4460464	2	Pin, Male	
2	4460539	1	Plug, Male - 3 Position (To Overhead Switches)	
2	4460465	2	Socket, Female	
2	4460466	1	Plug, Terminal	
3	1001237132	1	Cable Assembly - Ground to Platform	
3	4460894	1	Plug, Male - 6 Position (To Platform Harness Item 2)	
3	4460465	4	Socket, Female	
3	4460944	2	Socket, Female	
3	4460899	1	Receptacle, Female - 6 Position (To Chassis Harness)	
3	4460464	4	Pin, Male	
3	4460943	2	Pin, Male	

FIGURE 7-28. GROUND TO PLATFORM CABLE INSTALLATION - WITH PLATFORM COIL CABLE (MACHINES WITH SN STARTING WITH 12, B2 & G2)

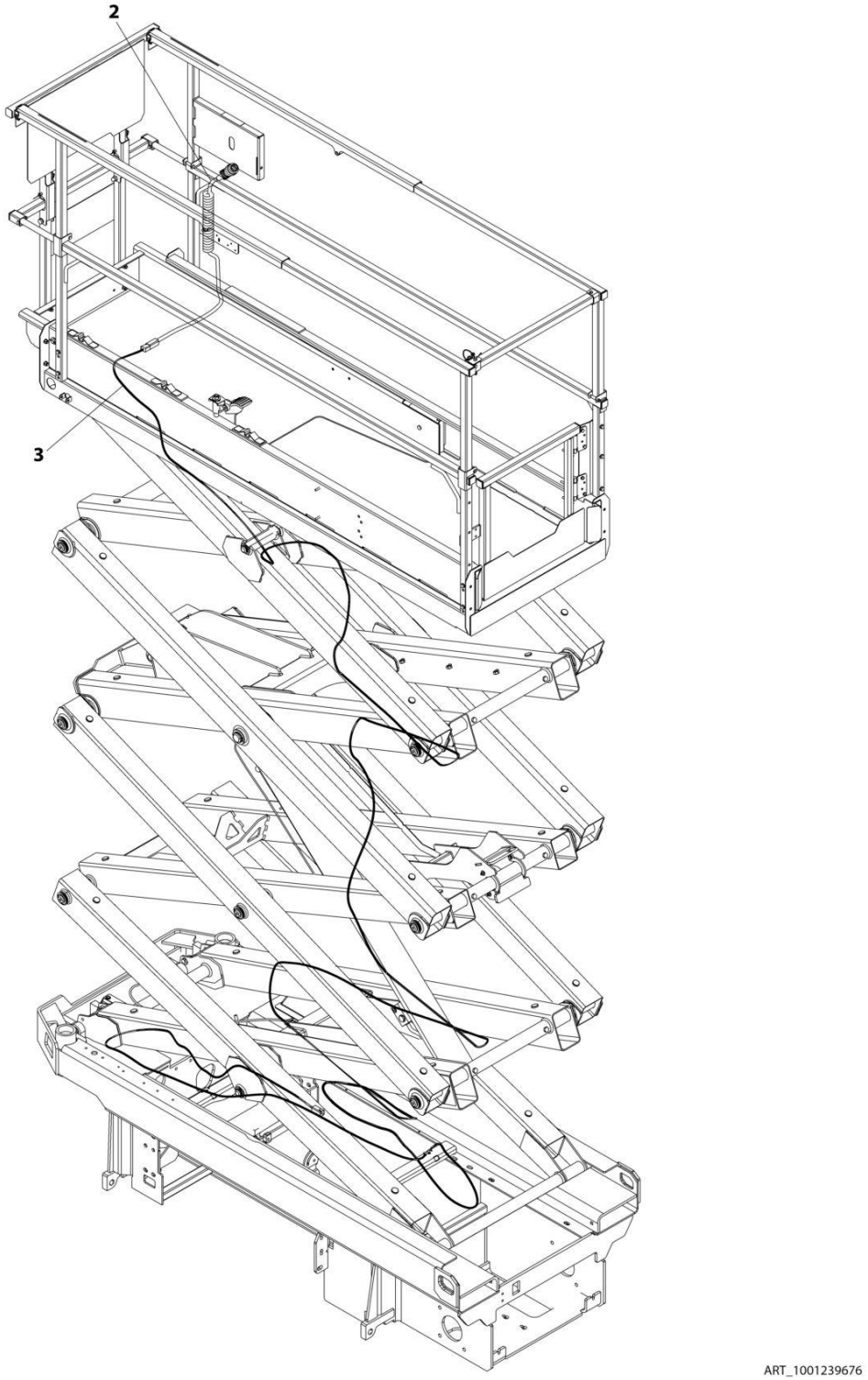

FIGURE 7-28. GROUND TO PLATFORM CABLE INSTALLATION - WITH PLATFORM COIL CABLE (MACHINES WITH SN STARTING WITH 12, B2 & G2)

ITEM	PART NUMBER	QTY	DESCRIPTION	REV
	1001239676	Ref	GROUND TO PLATFORM CABLE INSTALLATION - WITH PLATFORM COIL CABLE	F
1	4240017	AR	Tie-Strap (Not Shown)	
2	1001202184	1	Platform Harness	
2	4460899	1	Receptacle, Female - 6 Position (To Item 3)	
2	4460464	4	Pin, Male	
2	4460943	2	Pin, Male	
2	4460754	1	Connector - 14 Position (To Console Box)	
2	4460465	8	Socket, Female	
2	4460466	6	Plug, Terminal	
3	1001237132	1	Cable Assembly - Ground to Platform	
3	4460894	1	Plug, Male - 6 Position (To Platform Harness Item 2)	
3	4460465	4	Socket, Female	
3	4460944	2	Socket, Female	
3	4460899	1	Receptacle, Female - 6 Position (To Chassis Harness)	
3	4460464	4	Pin, Male	
3	4460943	2	Pin, Male	

FIGURE 7-29. GROUND TO PLATFORM CABLE INSTALLATION - WITH PLATFORM COIL CABLE & FOOTSWITCH (MACHINES WITH SN STARTING WITH 12, B2 & G2)

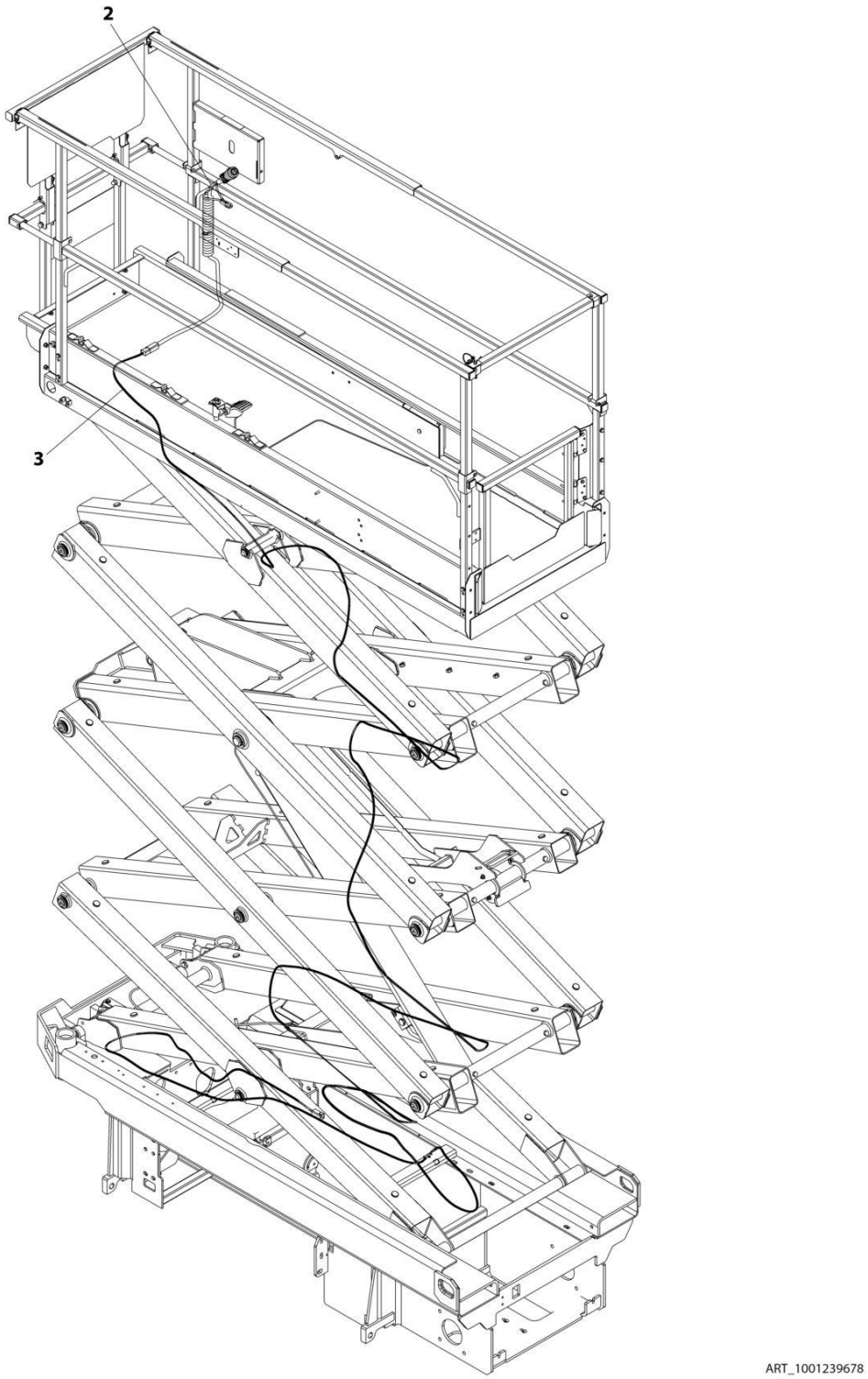

FIGURE 7-29. GROUND TO PLATFORM CABLE INSTALLATION - WITH PLATFORM COIL CABLE & FOOTSWITCH (MACHINES WITH SN STARTING WITH 12, B2 & G2)

ITEM	PART NUMBER	QTY	DESCRIPTION	REV
	1001239678	Ref	GROUND TO PLATFORM CABLE INSTALLATION - WITH PLATFORM COIL CABLE AND FOOTSWITCH	F
1	4240017	AR	Tie-Strap (Not Shown)	
2	1001223262	1	Platform Harness	
2	4460899	1	Receptacle, Female - 6 Position (To Item 3)	
2	4460464	4	Pin, Male	
2	4460943	2	Pin, Male	
2	4460754	1	Connector - 14 Position (To Console Box)	
2	4460465	8	Socket, Female	
2	4460944	2	Socket, Female	
2	4460466	4	Plug, Terminal	
2	4460891	1	Plug, Male - 2 Position (To Footswitch)	
2	4460465	2	Socket, Female	
2	4460897	1	Receptacle, Female - 2 Position (Footswitch Jumper)	
2	4460464	2	Pin, Male	
2	4460539	1	Plug, Male - 3 Position (To Overhead Switches)	
2	4460465	2	Socket, Female	
2	4460466	1	Plug, Terminal	
3	1001237132	1	Cable Assembly - Ground to Platform	
3	4460894	1	Plug, Male - 6 Position (To Platform Harness Item 2)	
3	4460465	4	Socket, Female	
3	4460944	2	Socket, Female	
3	4460899	1	Receptacle, Female - 6 Position (To Chassis Harness)	
3	4460464	4	Pin, Male	
3	4460943	2	Pin, Male	

FIGURE 7-30. GROUND TO PLATFORM CABLE INSTALLATION - PLATFORM STRAIGHT CABLE ONLY (MACHINES WITH SN STARTING WITH 12, B2, G2 & M2)

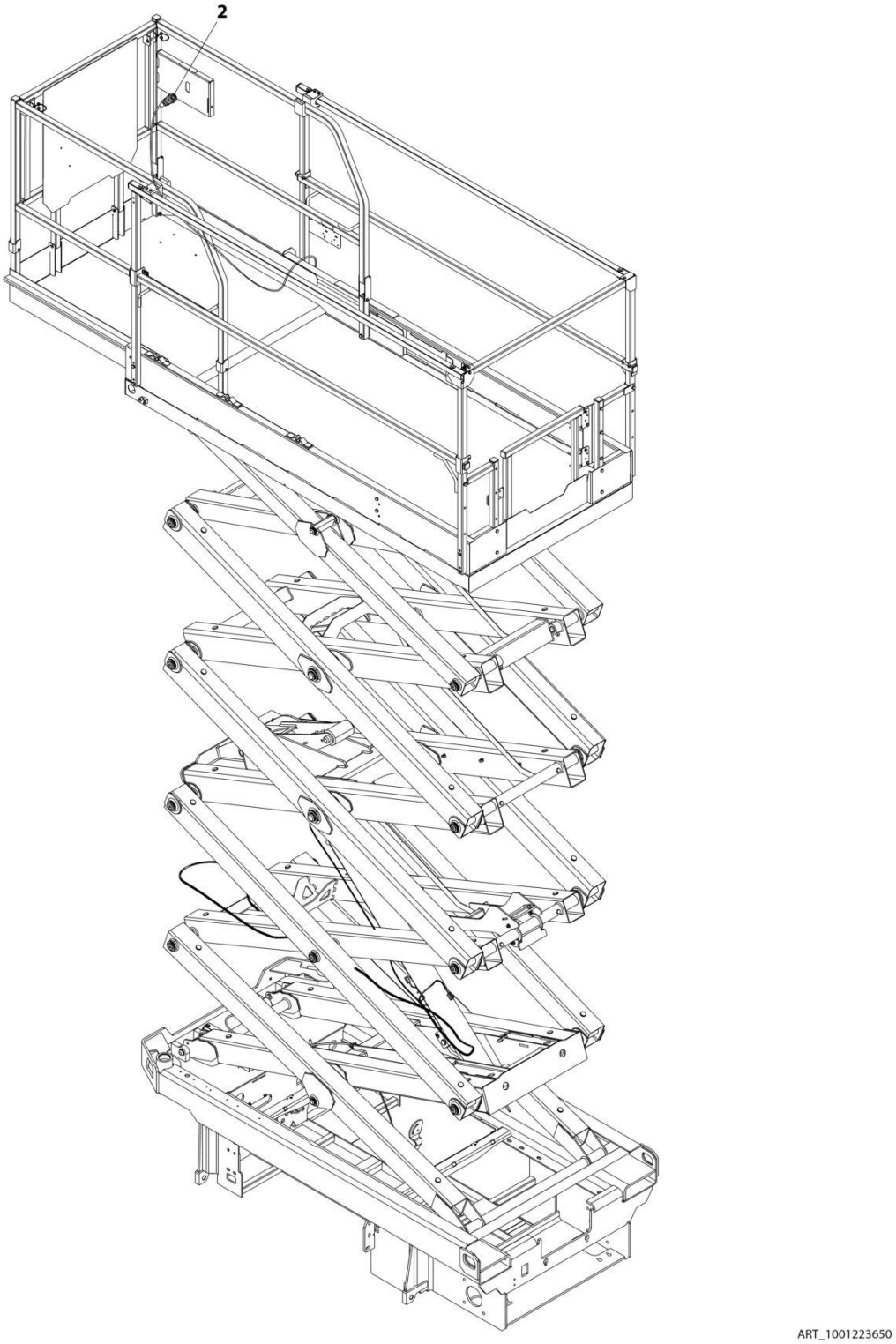

FIGURE 7-30. GROUND TO PLATFORM CABLE INSTALLATION - PLATFORM STRAIGHT CABLE ONLY (MACHINES WITH SN STARTING WITH 12, B2, G2 & M2)

ITEM	PART NUMBER	QTY	DESCRIPTION	REV
	1001223650	Ref	GROUND TO PLATFORM CABLE INSTALLATION	A
1	4240017	AR	Tie-Strap (Not Shown)	
2	1001200812	1	Platform Harness	
2	4460899	1	Receptacle, Female - 6 position (To Platform/AC Cable Connector)	
2	4460464	4	Pin, Male	
2	4460943	2	Pin, Male	
2	4460754	1	Connector - 14 Position (To Console Box)	
2	4460465	8	Socket, Female	
2	4460466	6	Plug, Terminal	

FIGURE 7-31. GROUND TO PLATFORM CABLE INSTALLATION - PLATFORM COIL CABLE ONLY (MACHINES WITH SN STARTING WITH 12, B2, G2 & M2)

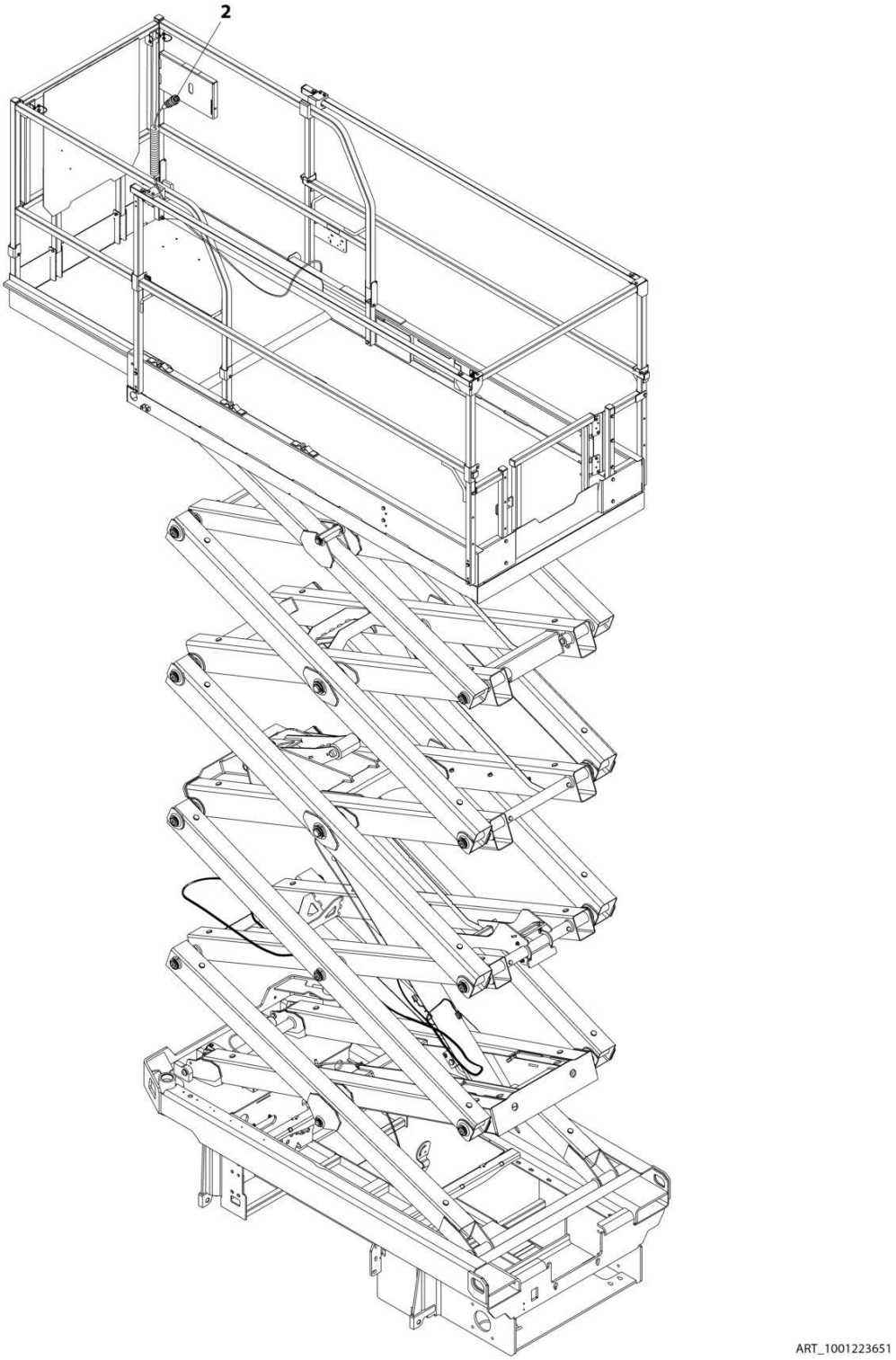

FIGURE 7-31. GROUND TO PLATFORM CABLE INSTALLATION - PLATFORM COIL CABLE ONLY (MACHINES WITH SN STARTING WITH 12, B2, G2 & M2)

ITEM	PART NUMBER	QTY	DESCRIPTION	REV
	1001223651	Ref	GROUND TO PLATFORM CABLE INSTALLATION	A
1	4240017	AR	Tie-Strap (Not Shown)	
2	1001202184	1	Platform Harness	
2	4460899	1	Receptacle, Female - 6 position (To Platform/AC Cable Connector)	
2	4460464	4	Pin, Male	
2	4460943	2	Pin, Male	
2	4460754	1	Connector - 14 Position (To Console Box)	
2	4460465	8	Socket, Female	
2	4460466	6	Plug, Terminal	

FIGURE 7-32. GROUND TO PLATFORM CABLE INSTALLATION - SCISSORS ARMS CABLE ONLY (MACHINES WITH SN STARTING WITH 12, B2, G2 & M2)

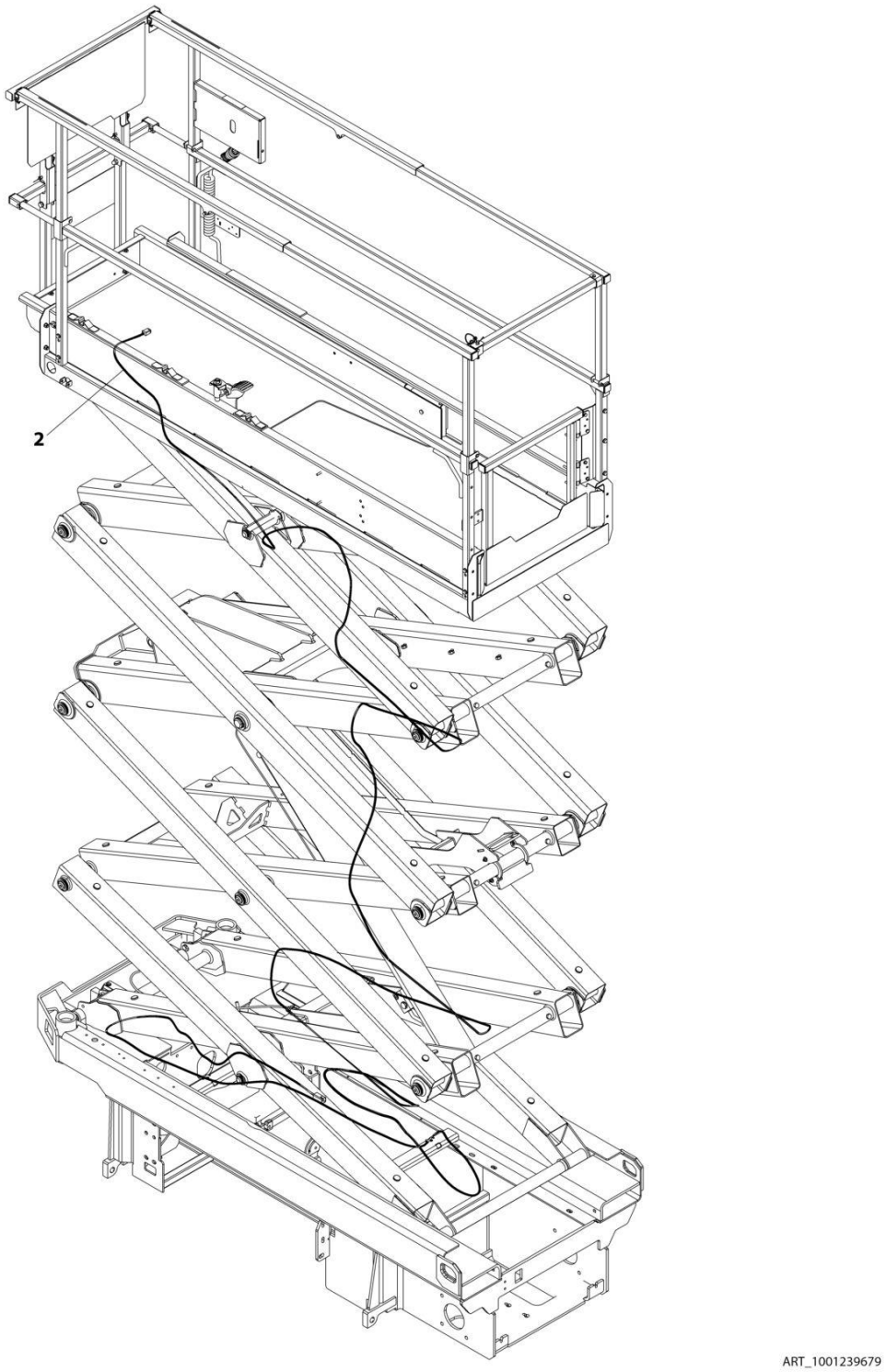

FIGURE 7-32. GROUND TO PLATFORM CABLE INSTALLATION - SCISSORS ARMS CABLE ONLY (MACHINES WITH SN STARTING WITH 12, B2, G2 & M2)

ITEM	PART NUMBER	QTY	DESCRIPTION	REV
	1001239679	Ref	GROUND TO PLATFORM CABLE INSTALLATION	F
1	4240017	AR	Tie-Strap (Not Shown)	
2	1001237132	1	Cable Assembly - Ground to Platform	
2	4460894	1	Plug, Male - 6 Position (To Platform Harness Item 2)	
2	4460465	4	Socket, Female	
2	4460944	2	Socket, Female	
2	4460899	1	Receptacle, Female - 6 Position (To Chassis Harness)	
2	4460464	4	Pin, Male	
2	4460943	2	Pin, Male	

FIGURE 7-33. LIFT DOWN HARNESS

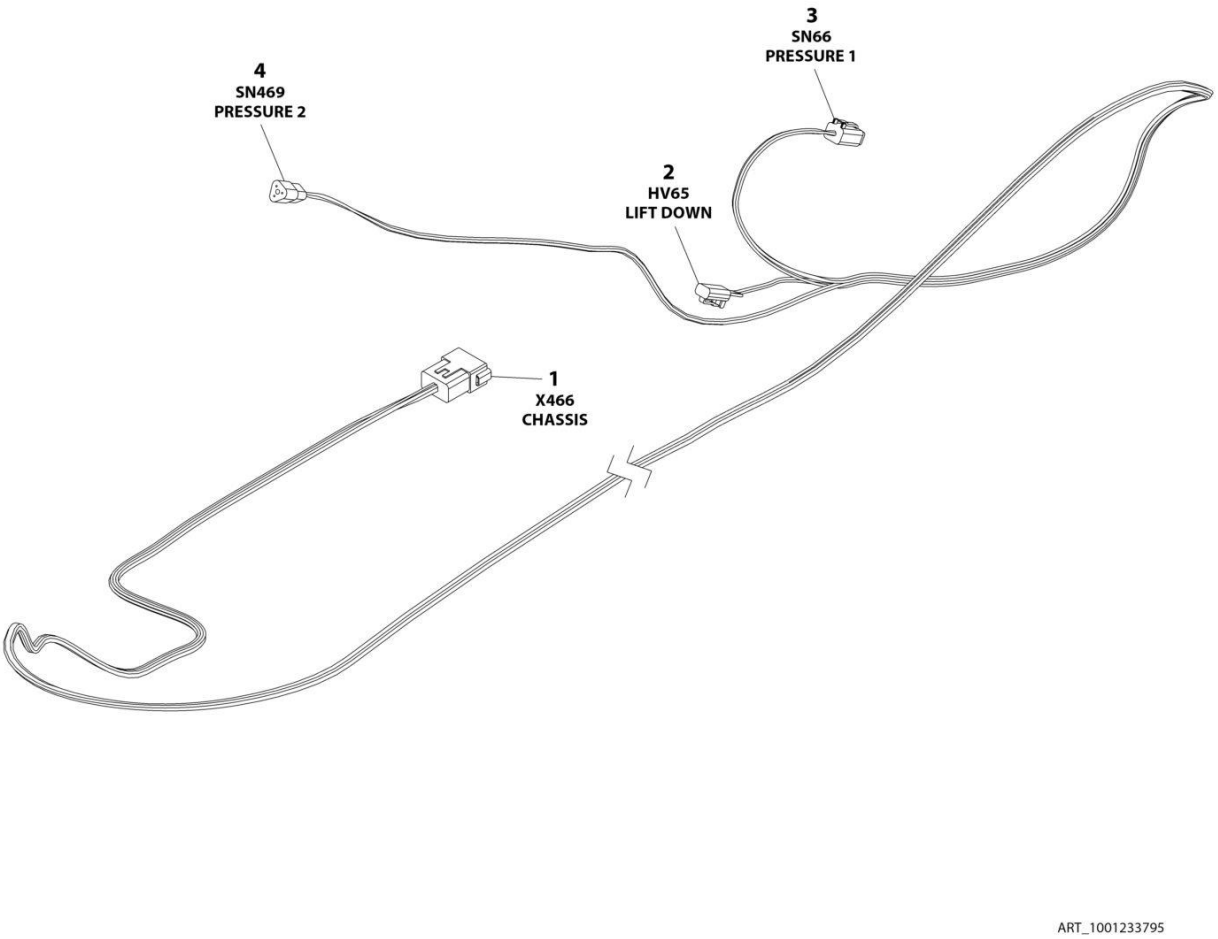

FIGURE 7-33. LIFT DOWN HARNESS

ITEM	PART NUMBER	QTY	DESCRIPTION	REV
	1001233795	Ref	LIFT DOWN HARNESS	D
1	4460970	1	Receptacle, Female - 12 Position	
1	4460464	9	Pin, Male	
1	4460466	3	Plug, Terminal	
2	4460891	1	Plug, Male - 4 Position	
2	4460465	2	Socket, Female	
3	4460884	1	Plug, Male - 4 Position	
3	4460465	4	Socket, Female	
4	4460539	1	Plug, Male - 3 Position	
4	4460465	3	Socket, Female	

FIGURE 7-34. PLATFORM CONTROL BOX HARNESS

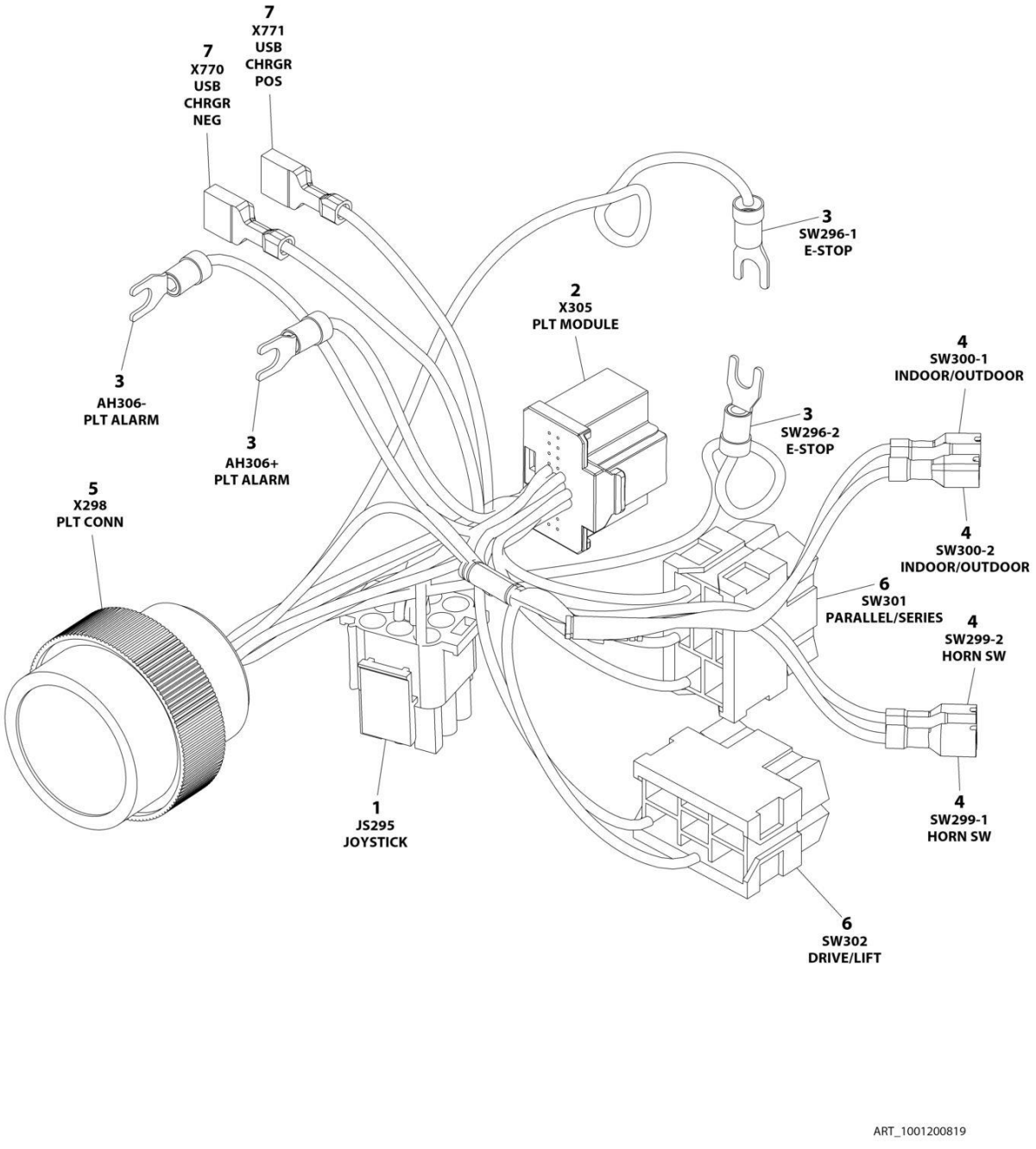

FIGURE 7-34. PLATFORM CONTROL BOX HARNESS

ITEM	PART NUMBER	QTY	DESCRIPTION	REV
	1001200819	Ref	PLATFORM CONTROL BOX HARNESS	E
1	4460265	1	Plug, Male - 9 Position	
1	4460267	6	Pin, Male	
2	1001212036	1	Connector - 20 Position	
2	1001212035	16	Terminal	
3	4460183	4	Terminal, Fork	
4	1001201885	4	Terminal with Cover	
5	4461016	1	Connector - 14 Position	
5	4460464	8	Pin, Male	
5	4460466	6	Plug, Terminal	
6	4460418	2	Connector - 6 Position	
6	1001159186	5	Terminal	
7	1001194421	2	Terminal	

FIGURE 7-35. RECEPTACLE BOX KIT - 110V GFI

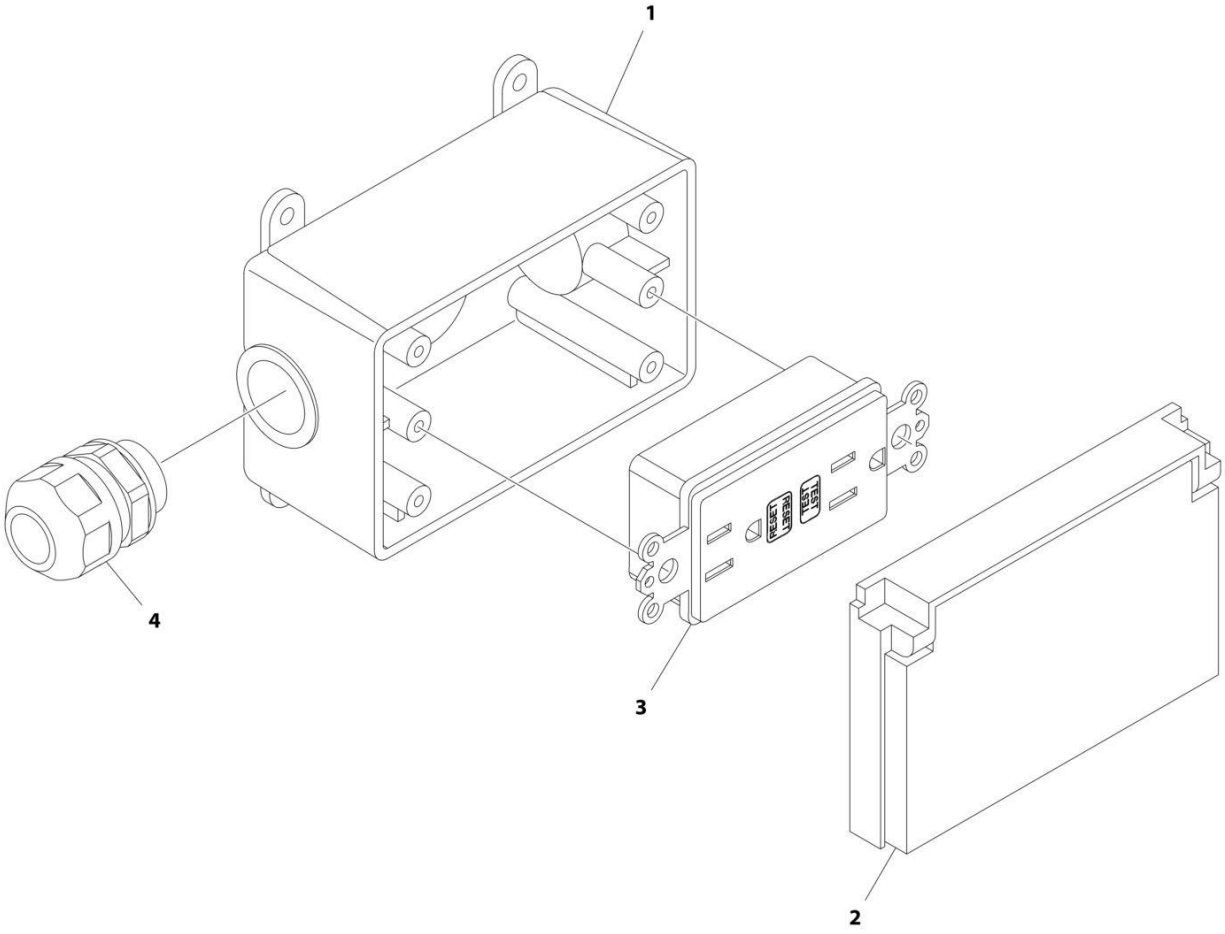

ART_2902431

FIGURE 7-35. RECEPTACLE BOX KIT - 110V GFI

ITEM	PART NUMBER	QTY	DESCRIPTION	REV
	2902431	Ref	RECEPTACLE BOX KIT - 110V GFI	D
1	0861731	1	Box, Receptacle	
2	1671207	1	Cover, Receptacle	
3	4460346	1	Receptacle	
4	4460662	1	Connector, Strain Relief	

FIGURE 7-36. RECEPTACLE BOX KIT - 110V IEC YELLOW (CE & UK CA SPEC)

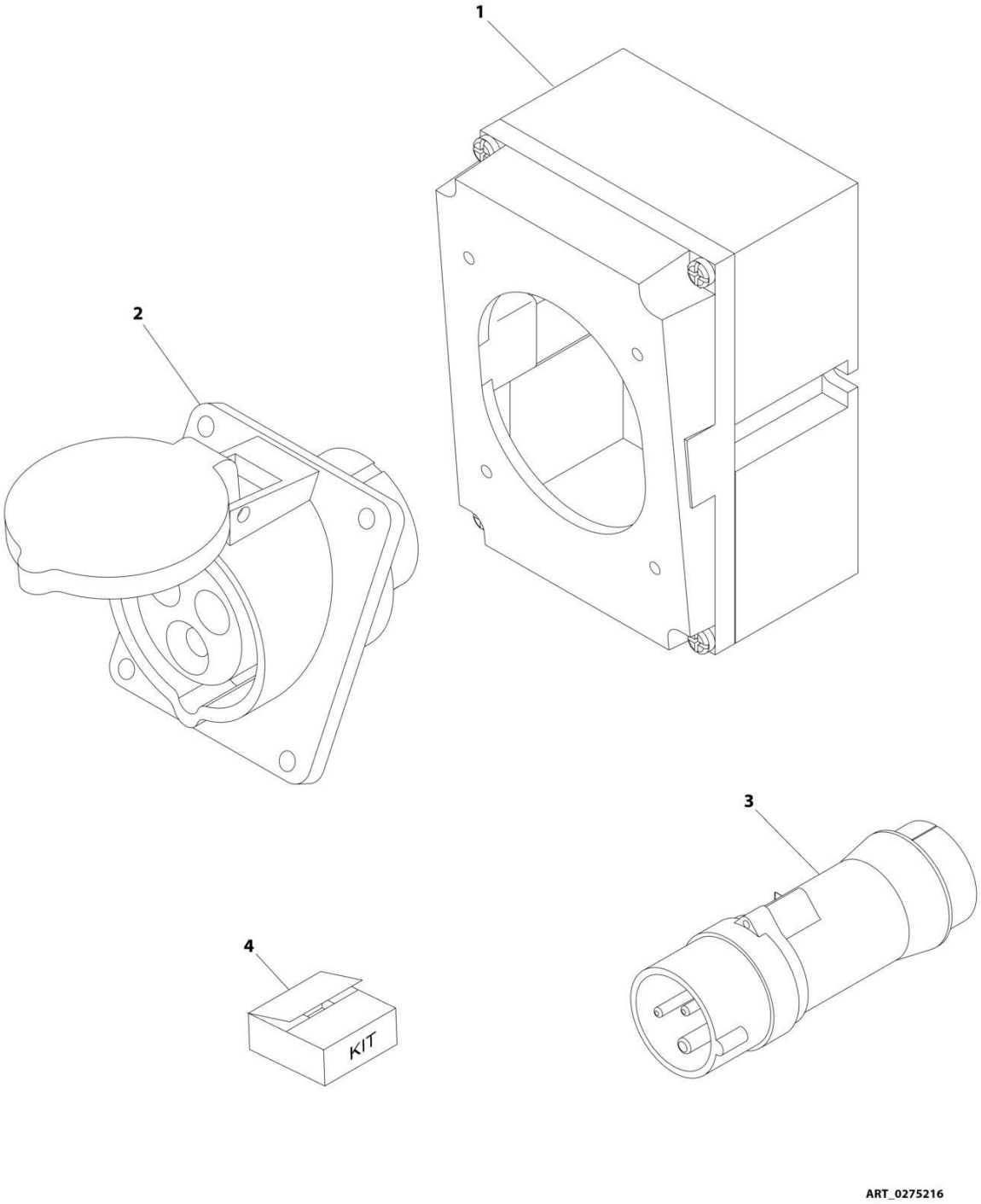

FIGURE 7-36. RECEPTACLE BOX KIT - 110V IEC YELLOW (CE & UK CA SPEC)

ITEM	PART NUMBER	QTY	DESCRIPTION	REV
	0275216	Ref	RECEPTACLE BOX KIT - 110V IEC YELLOW	B
1	0861781	1	Box, Switch	
2	4461198	1	Receptacle	
3	4461196	1	Plug, Male	
4	1001100341	1	Plug and Socket Kit (Includes Items 1-3 and Female Plug p/n 4461197)	

FIGURE 7-37. RECEPTACLE BOX KIT - 220V IEC BLUE (CE & UK CA SPEC)

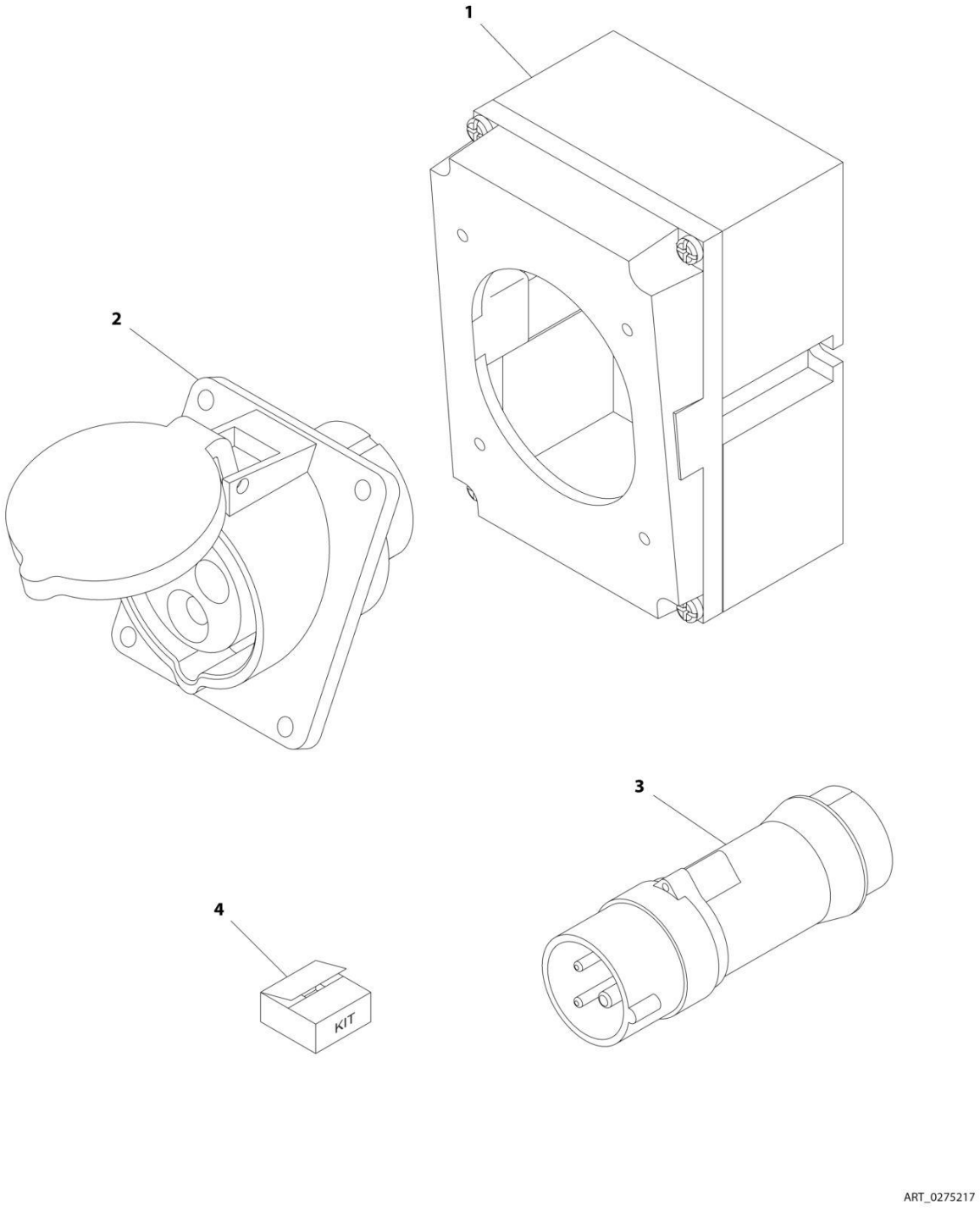

FIGURE 7-37. RECEPTACLE BOX KIT - 220V IEC BLUE (CE & UK CA SPEC)

ITEM	PART NUMBER	QTY	DESCRIPTION	REV
	0275217	Ref	RECEPTACLE BOX KIT - 220V IEC BLUE	B
1	0861781	1	Box, Switch	
2	4461201	1	Receptacle	
3	4461199	1	Plug, Male	
4	1001100342	1	Plug and Socket Kit (Includes Items 1-3 and Female Plug p/n 4461200)	

FIGURE 7-38. RECEPTACLE BOX KIT - 220V CEE7 POST GROUND (CE & UK CA SPEC)

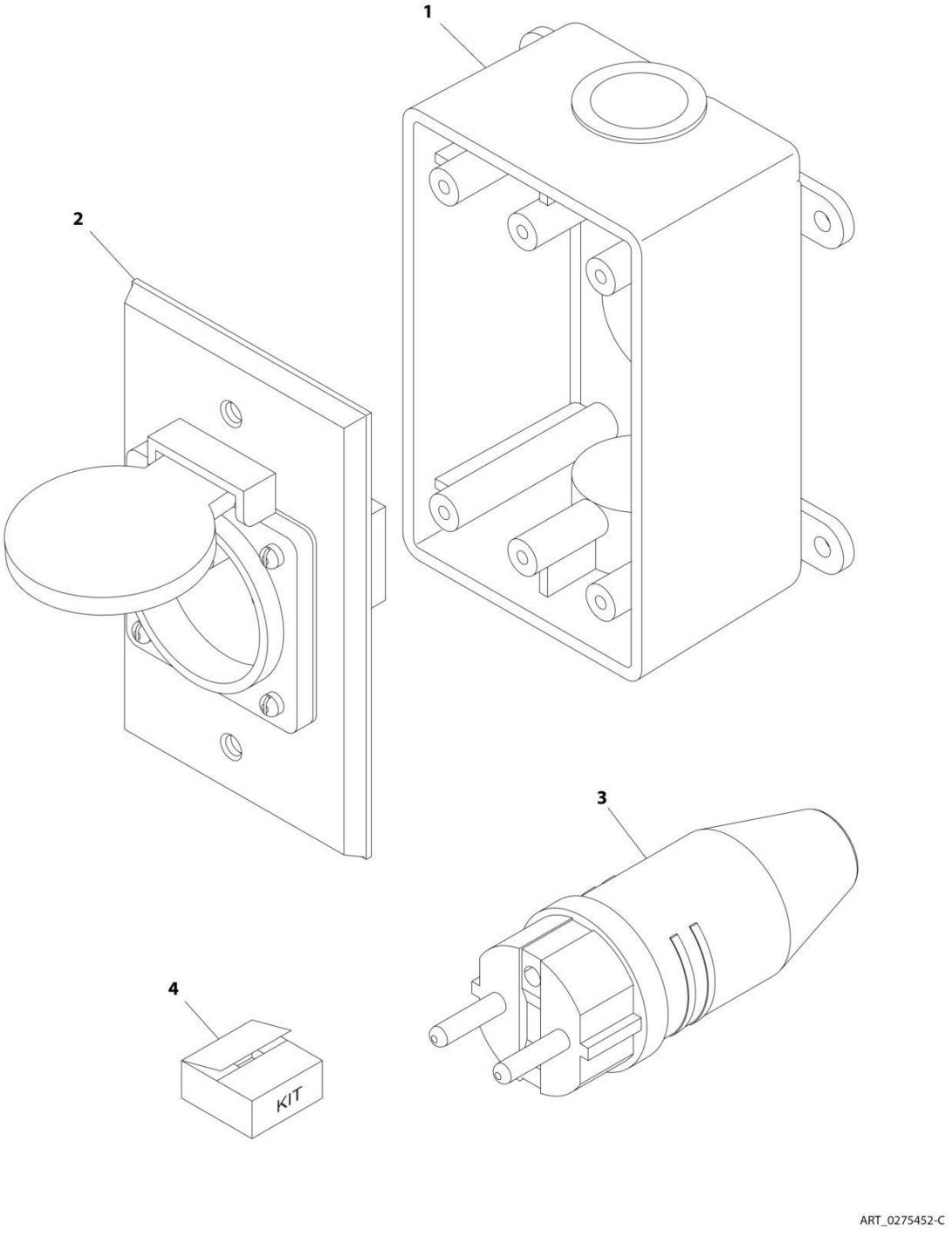

FIGURE 7-38. RECEPTACLE BOX KIT - 220V CEE7 POST GROUND (CE & UK CA SPEC)

ITEM	PART NUMBER	QTY	DESCRIPTION	REV
	0275452	Ref	RECEPTACLE BOX KIT - 220V CEE7 POST GROUND 2IN X 4IN BOX	C
1	0861731	1	Box, Switch	
2	4461244	1	Receptacle	
3	4461205	1	Plug, Male	
4	1001100345	1	Plug and Socket Kit (Includes Items 1-3 and Female Plug p/n 4461203)	

FIGURE 7-39. RECEPTACLE BOX KIT - 220V CEE7 SIDE GROUND (CE & UK CA SPEC)

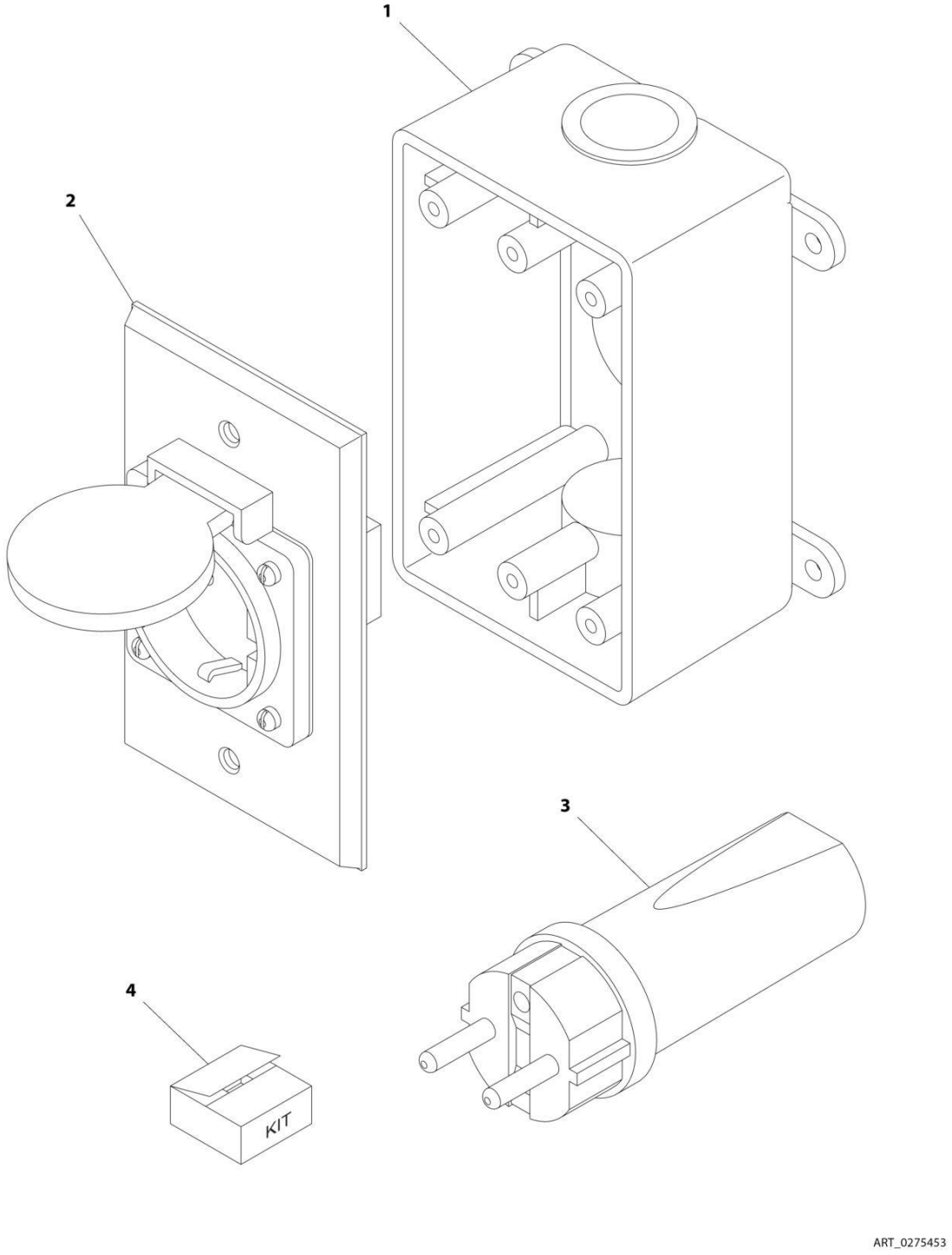

FIGURE 7-39. RECEPTACLE BOX KIT - 220V CEE7 SIDE GROUND (CE & UK CA SPEC)

ITEM	PART NUMBER	QTY	DESCRIPTION	REV
	0275453	Ref	RECEPTACLE BOX KIT - 220V CEE7 SIDE GROUND	B
1	0861731	1	Box, Switch	
2	4461245	1	Receptacle	
3	4461205	1	Plug, Male	
4	1001100347	1	Plug and Socket Kit (Includes Items 1-3 and Female Plug p/n 4461206)	

FIGURE 7-40. RECEPTACLE BOX KIT - 220V AFSINT 107 (CE & UK CA SPEC)

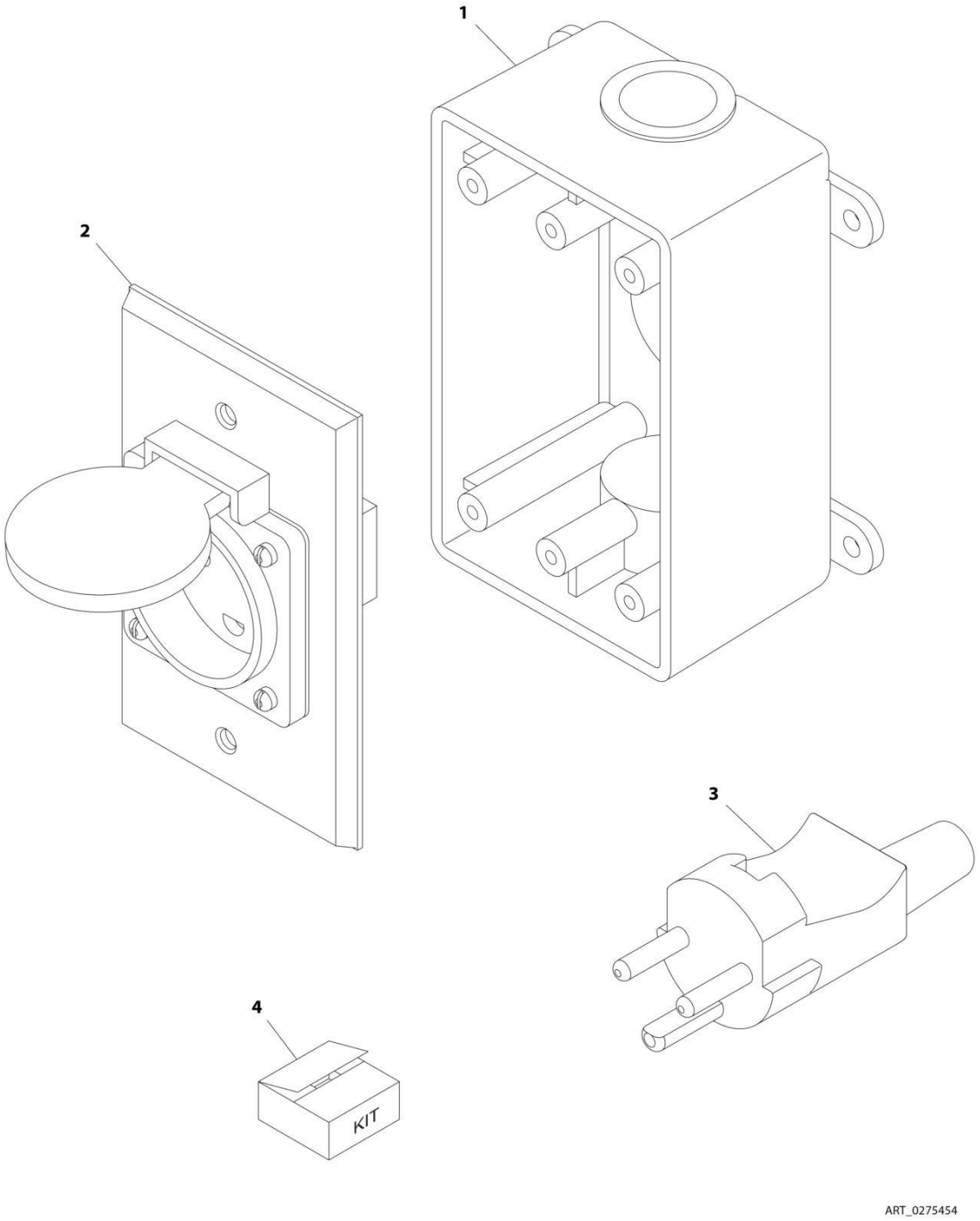

FIGURE 7-40. RECEPTACLE BOX KIT - 220V AFSINT 107 (CE & UK CA SPEC)

ITEM	PART NUMBER	QTY	DESCRIPTION	REV
	0275454	Ref	RECEPTACLE BOX KIT - 220V AFSINT 107	B
1	0861731	1	Box, Switch	
2	4461246	1	Receptacle	
3	4461249	1	Plug, Male	
4	1001100346	1	Plug and Socket Kit (Includes Items 1-3 and Female Plug p/n 4461250)	

SECTION 8 - DECALS

FIGURE 8-1. DECAL INSTALLATION (ANSI SPECS)

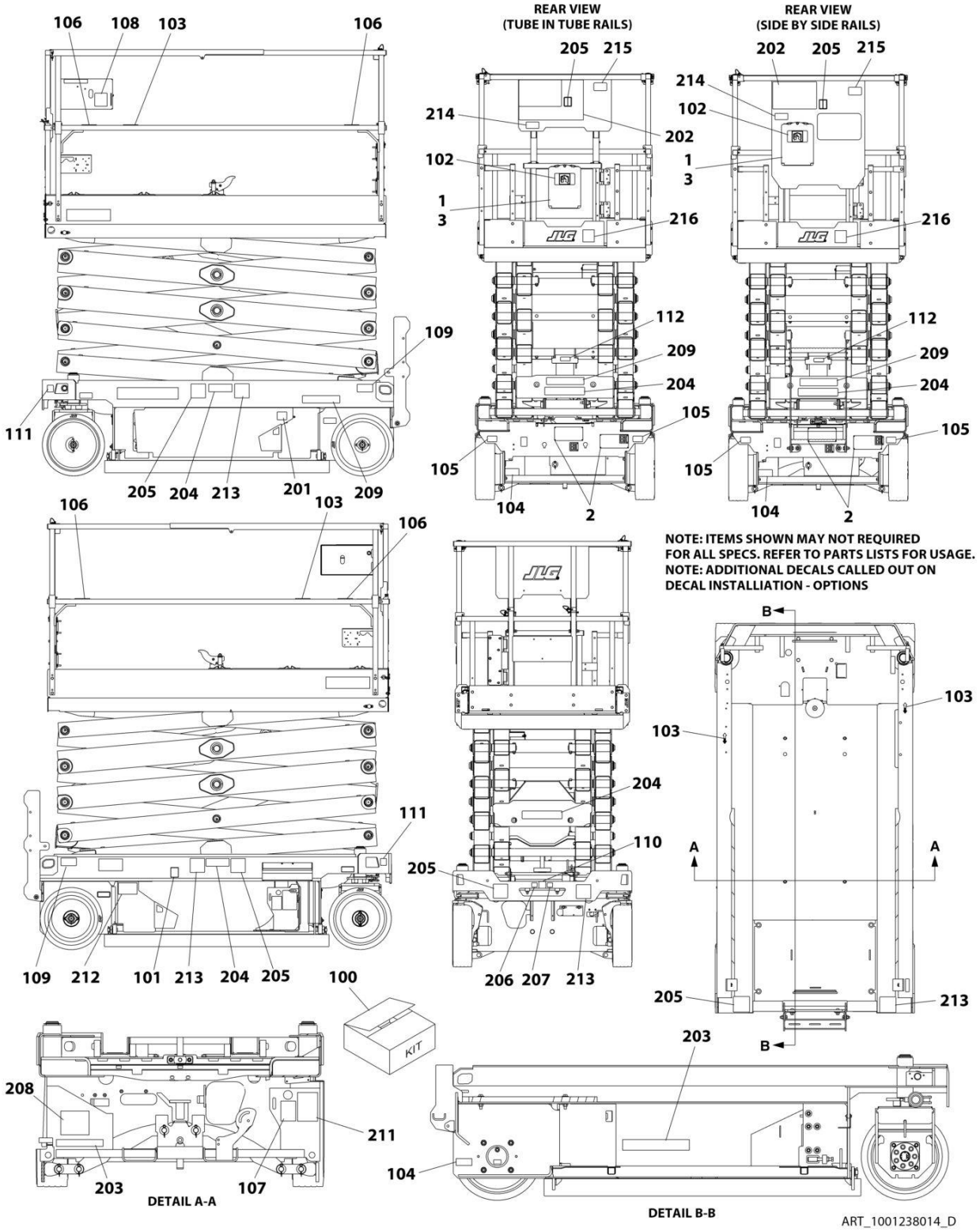

FIGURE 8-1. DECAL INSTALLATION (ANSI SPECS)

ITEM	PART NUMBER	QTY	DESCRIPTION	REV
	1001238014	Ref	DECAL INSTALLATION (ENGLISH LANGUAGE)	D
	1001237749	Ref	DECAL REFERENCE CHART	H
1	2080040	3	Fastener	
2	2080057	4	Fastener	
3	8990147	1	Holder, Manual	
100	1001239270	1	Master Decal Kit	D
101	1701504	1	Decal - Hydraulic Oil	
102	1701640	1	Decal - Manual	
103	1703819	4	Decal - Direction Arrow	
104	1001248126	1	Decal – Manual Descent Instructions	
105	1704016	2	Decal - Fork Lift	
106	1704277	4	Decal - Lanyard Attach	
107	1704412	1	Decal - Hydraulic Oil	
108	1001132359	1	Decal - Control Box Locate	
109	1001162864	2	Decal - Lift Point/Tie Down	
110	1001212290	1	Decal - Tie Down	
111	1001212291	2	Decal - Lifting Lug	
112	1001237899	1	Decal - Arms Prop	
201	1702155	1	Decal - Battery Disconnect	
202	1703816	1	Decal - Danger/Warning	
203	1001146794	1	Decal - Battery/Charger Service	
204	1001211777	4	Decal - Crushing Hazard	
205	1001211779	4	Decal - Electrocution	
206	1001212292	1	Decal - No Lifting	
207	1001212293	1	Decal - No Forklift	
208	1001237538	1	Decal - Battery Spacer	
209	1703813	2	Decal - Warning Battery Ventilation	
211	1001131270	1	Decal - Patent	
212	1001223055	1	Decal - Yearly Inspection	
214	1001228370	1	Decal - ICES	
215	1001231801	1	Decal - Warning Prop 65	

FIGURE 8-2. DECAL INSTALLATION (AUSTRALIAN SPECS)

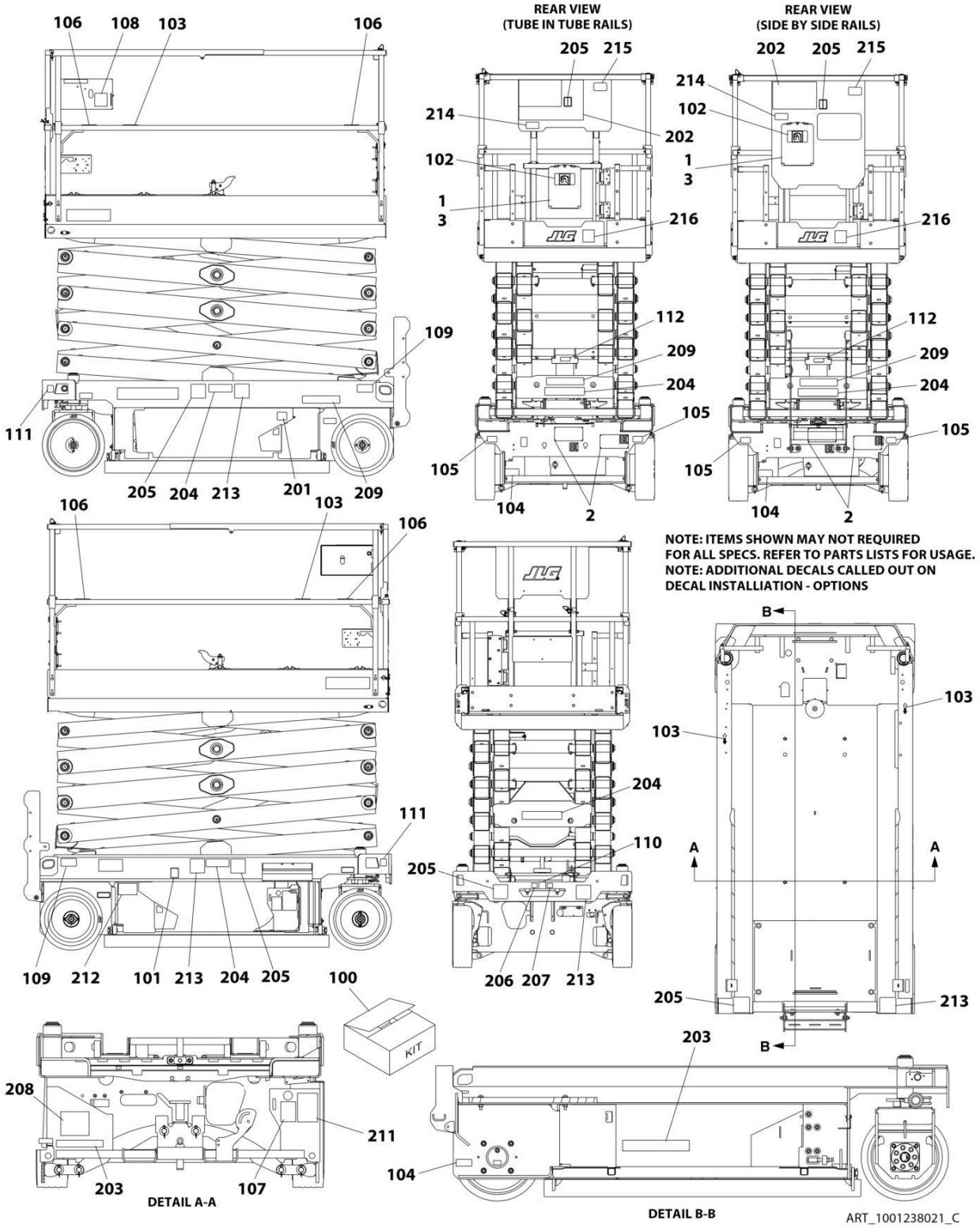

FIGURE 8-2. DECAL INSTALLATION (AUSTRALIAN SPECS)

ITEM	PART NUMBER	QTY	DESCRIPTION	REV
	1001238021	Ref	DECAL INSTALLATION (ENGLISH LANGUAGE)	C
	1001237749	Ref	DECAL REFERENCE CHART	H
1	2080040	3	Fasteners	
2	2080057	4	Fasteners	
3	8990147	1	Holder, Manual	
100	1001239270	1	Master Decal Kit	D
101	1701504	1	Decal - Hydraulic Oil	
102	1701640	1	Decal - Manual	
103	1703819	4	Decal - Direction Arrow	
104	1001248126	1	Decal – Manual Descent Instructions	
105	1704016	2	Decal - Fork Lift	
106	1704277	4	Decal - Lanyard Attach Graphic	
107	1704412	1	Decal - Hydraulic Oil	
108	1001132359	1	Decal - Control Box Locate	
109	1001162864	2	Decal - Lift Point/Tie Down	
110	1001212290	1	Decal - Tie Down	
111	1001212291	2	Decal - Lifting Lug	
112	1001237899	1	Decal - Arms Prop	
201	1702155	1	Decal - Battery Disconnect	
203	1001146794	1	Decal - Battery/Charger Service	
204	1705673	4	Decal - Crushing	
205	1705671	5	Decal - Electrocution	
206	1001212292	1	Decal - No Lifting	
207	1001212293	1	Decal - No Forklift	
208	1001237538	1	Decal - Battery Spacer	
209	1705670	2	Decal - Fire Hazard	

FIGURE 8-3. DECAL INSTALLATION (BRAZIL SPECS)

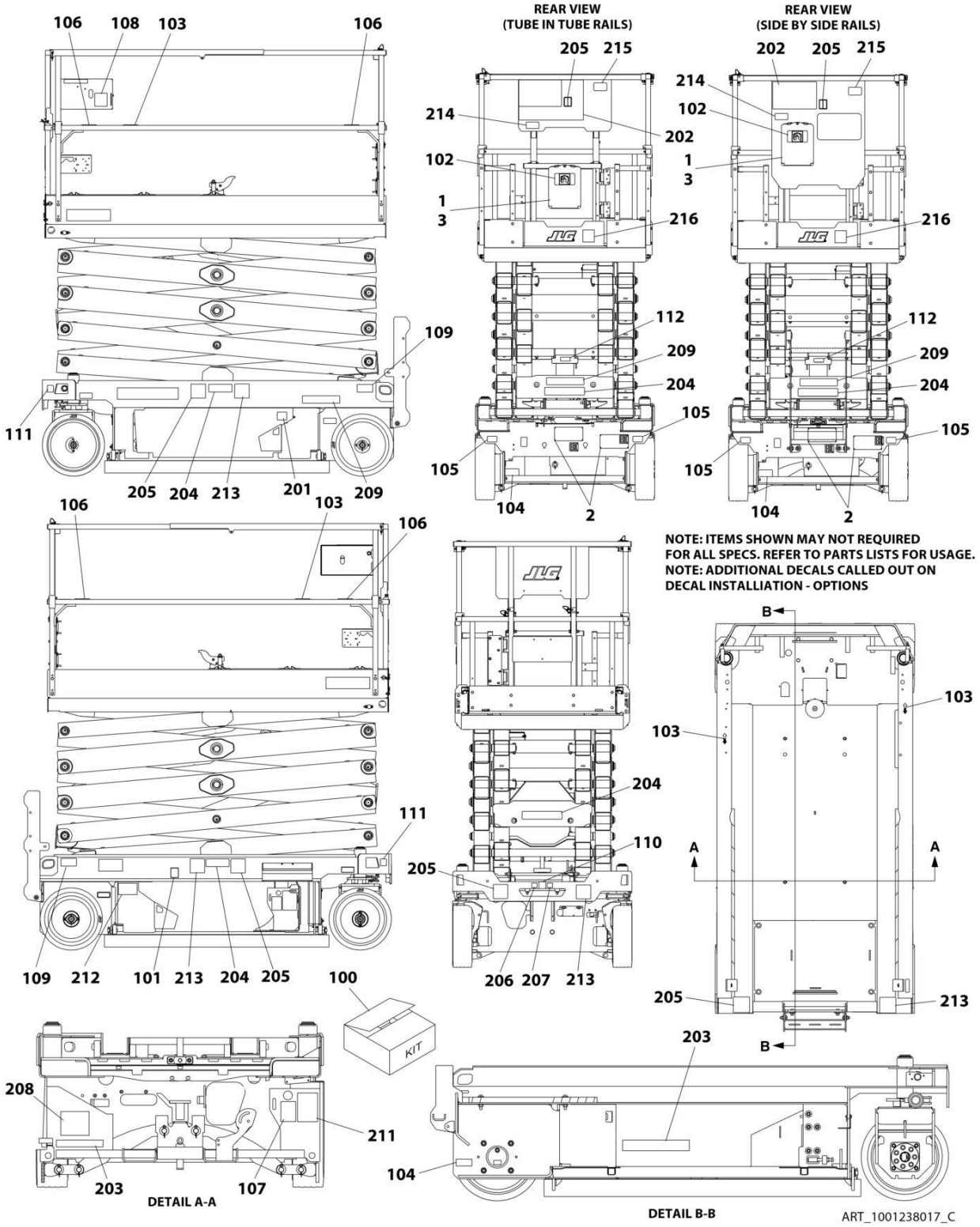

FIGURE 8-3. DECAL INSTALLATION (BRAZIL SPECS)

ITEM	PART NUMBER	QTY	DESCRIPTION	REV
	1001238017	Ref	DECAL INSTALLATION (SPANISH/PORTUGUESE LANGUAGE)	C
	1001237749	Ref	DECAL REFERENCE CHART	H
1	2080040	3	Fastener	
2	2080057	4	Fastener	
3	8990147	1	Holder, Manual	
100	1001239270	1	Master Decal Kit	D
101	1701504	1	Decal - Hydraulic Oil	
102	1701640	1	Decal - Manual	
103	1703819	4	Decal - Direction Arrow	
104	1001248126	1	Decal – Manual Descent Instructions	
105	1704016	2	Decal - Fork Lift	
106	1704277	4	Decal - Lanyard Attach	
107	1704412	1	Decal - Hydraulic Oil	
108	1001132359	1	Decal - Control Box Locate	
109	1001162864	2	Decal - Lift Point/Tie Down	
110	1001212290	1	Decal - Tie Down	
111	1001212291	2	Decal - Lifting Lug	
112	1001237899	1	Decal - Arms Prop	
201	1702155	1	Decal - Battery Disconnect	
202	1704699	1	Decal - Danger/Warning	
203	1001146794	1	Decal - Battery/Charger Service	
204	1001216650	4	Decal - Crushing Hazard	
205	1001215748	4	Decal - Electrocution	
206	1001212292	1	Decal - No Lifting	
207	1001212293	1	Decal - No Forklift	
208	1001237538	1	Decal - Battery Spacer	
209	1704341	2	Decal - Warning Battery Ventilation	
212	1001224052	1	Decal - Yearly Inspection	
213	1001216648	4	Decal - Danger Electrocution	

FIGURE 8-4. DECAL INSTALLATION (CE & UK CA SPECS)

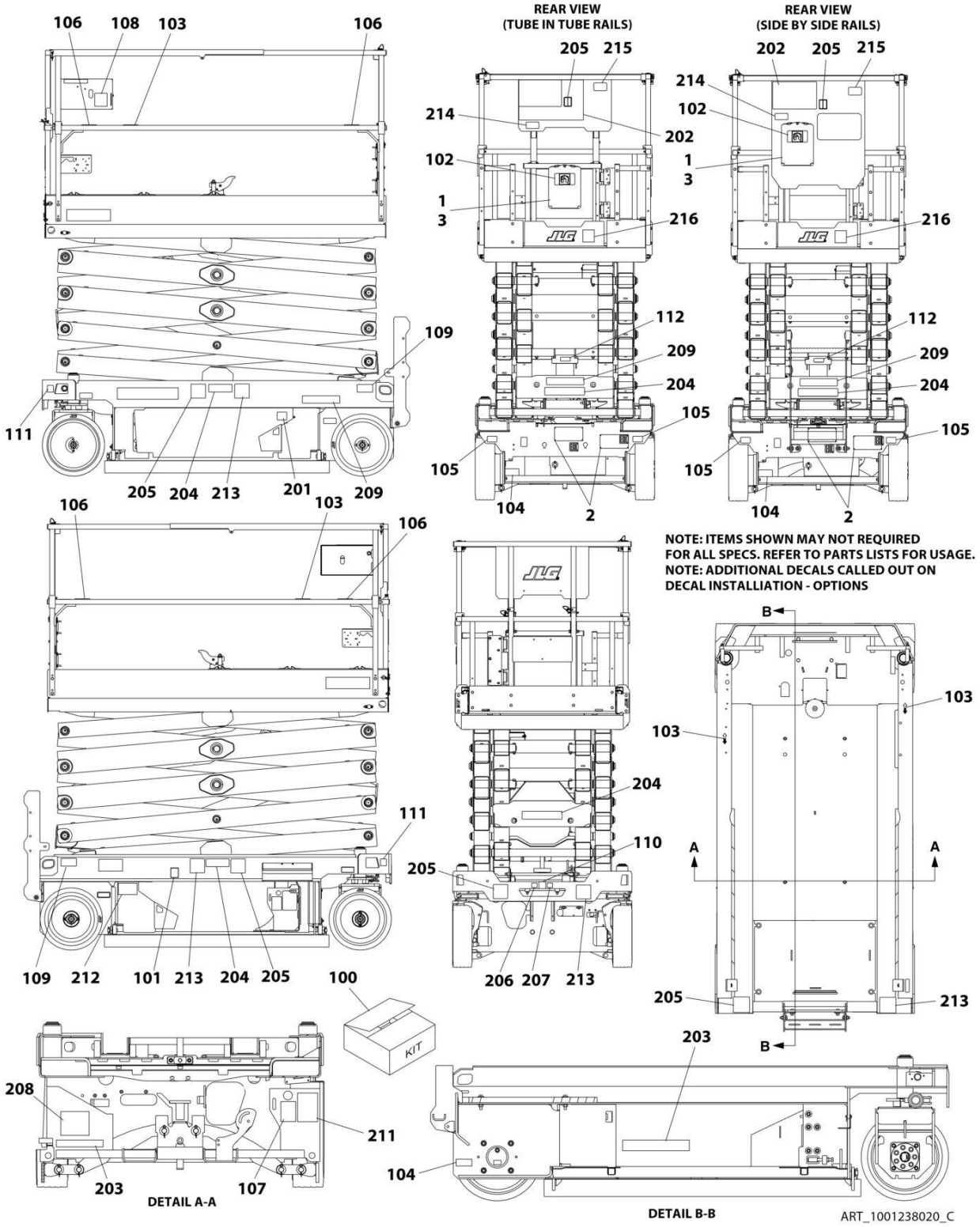

FIGURE 8-4. DECAL INSTALLATION (CE & UK CA SPECS)

ITEM	PART NUMBER	QTY	DESCRIPTION	REV
	1001238020	Ref	DECAL INSTALLATION (ENGLISH LANGUAGE)	C
	1001237749	Ref	DECAL REFERENCE CHART	H
1	2080040	3	Fastener	
2	2080057	4	Fastener	
3	8990147	1	Holder, Manual	
100	1001239270	1	Master Decal Kit	D
101	1701504	1	Decal - Hydraulic Oil	
102	1701640	1	Decal - Manual	
103	1703819	4	Decal - Direction Arrow	
104	1001248126	1	Decal – Manual Descent Instructions	
105	1704016	2	Decal - Fork Lift	
106	1704277	4	Decal - Lanyard Attach	
107	1704412	1	Decal - Hydraulic Oil	
108	1001132359	1	Decal - Control Box Locate	
109	1001162864	2	Decal - Lift Point/Tie Down	
110	1001212290	1	Decal - Tie Down	
111	1001212291	2	Decal - Lifting Lug	
112	1001237899	1	Decal - Arms Prop	
201	1702155	1	Decal - Battery Disconnect	
203	1001146795	1	Decal - Battery/Charger Service	
204	1705673	4	Decal - Crushing	
205	1705671	5	Decal - Electrocution	
206	1001212292	1	Decal - No Lifting	
207	1001212293	1	Decal - No Forklift	
208	1001237538	1	Decal - Battery Spacer	
209	1705670	2	Decal - Fire Hazard	

FIGURE 8-5. DECAL INSTALLATION (CHINA SPECS)

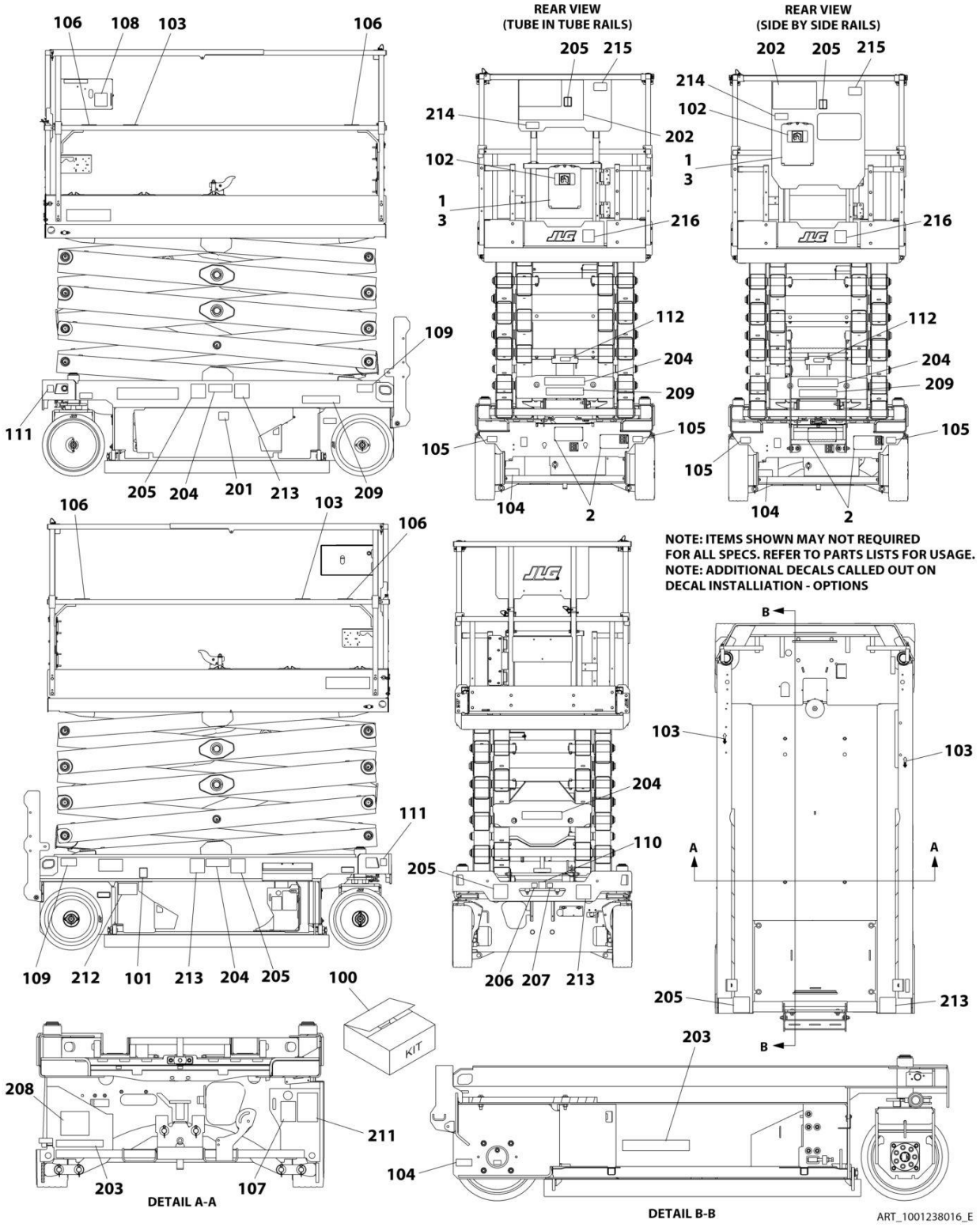

FIGURE 8-5. DECAL INSTALLATION (CHINA SPECS)

ITEM	PART NUMBER	QTY	DESCRIPTION	REV
	1001238016	Ref	DECAL INSTALLATION (ENGLISH/CHINESE LANGUAGE)	E
	1001237749	Ref	DECAL REFERENCE CHART	H
1	2080040	3	Fastener	
2	2080057	4	Fastener	
3	8990147	1	Holder, Manual	
100	1001239270	1	Master Decal Kit	D
101	1701504	1	Decal - Hydraulic Oil	
102	1701640	1	Decal - Manual	
103	1703819	4	Decal - Direction Arrow	
104	1001248126	1	Decal – Manual Descent Instructions	
105	1704016	2	Decal - Fork Lift	
106	1704277	4	Decal - Lanyard Attach	
107	1704412	1	Decal - Hydraulic Oil	
108	1001132359	1	Decal - Control Box Locate	
109	1001162864	2	Decal - Lift Point/Tie Down	
110	1001212290	1	Decal - Tie Down	
111	1001212291	2	Decal - Lifting Lug	
112	1001237899	1	Decal - Arms Prop	
201	1702155	1	Decal - Battery Disconnect	
202	1705195	1	Decal - Danger/Warning	
203	1001146794	1	Decal - Battery/Charger Service	
204	1001215752	4	Decal - Crushing Hazard	
205	1001211779	4	Decal - Electrocution	
206	1001212292	1	Decal - No Lifting	
207	1001212293	1	Decal - No Forklift	
208	1001237538	1	Decal - Battery Spacer	
209	1704344	2	Decal - Warning Battery Ventilation	
212	1001224051	1	Decal - Yearly Inspection	
213	1001215747	4	Decal - Danger Electrocution	
216	1001244298	1	Decal - Wechat QR Code	

FIGURE 8-6. DECAL INSTALLATION (CSA SPECS)

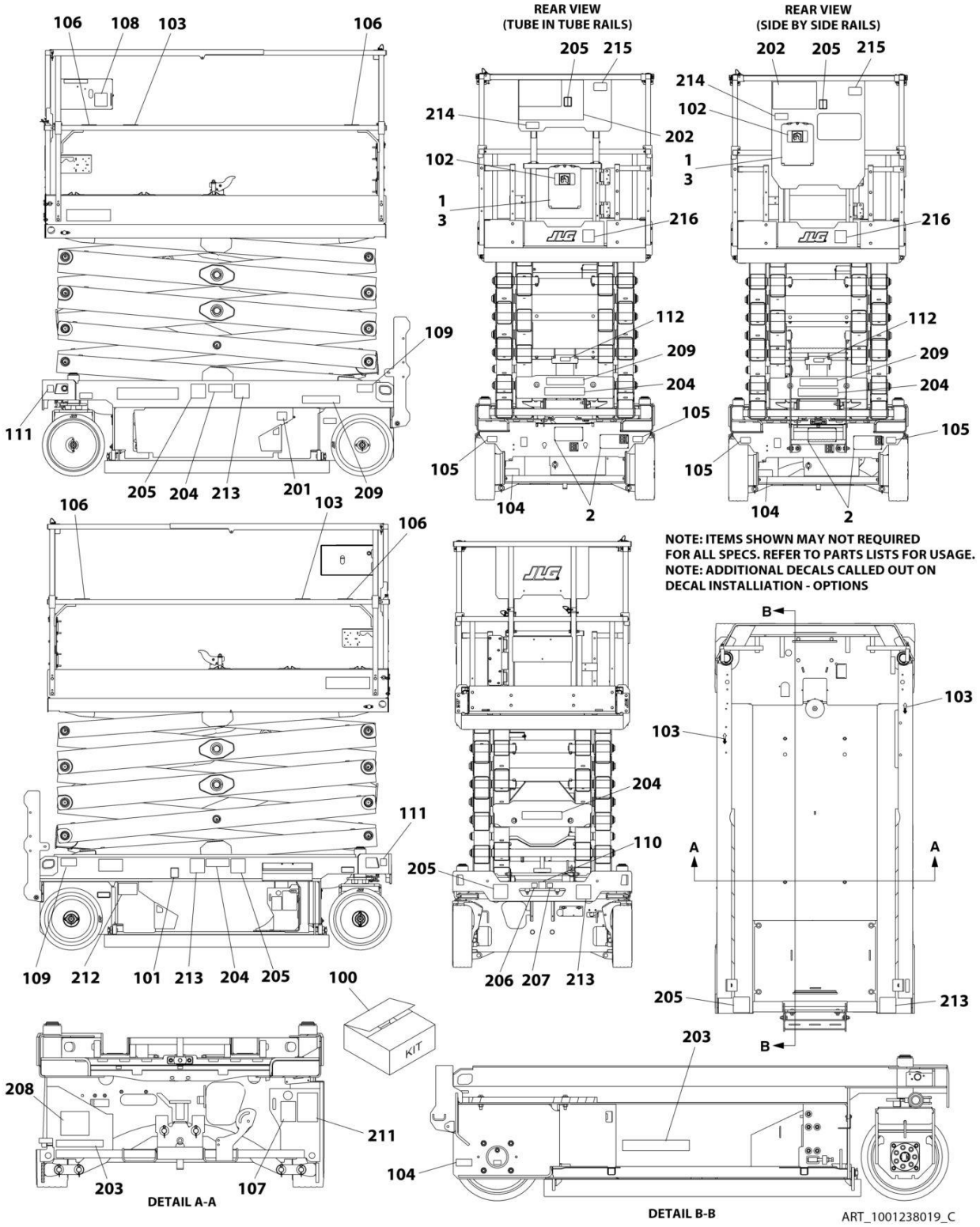

FIGURE 8-6. DECAL INSTALLATION (CSA SPECS)

ITEM	PART NUMBER	QTY	DESCRIPTION	REV
	1001238019	Ref	DECAL INSTALLATION (ENGLISH/FRENCH LANGUAGE)	C
	1001237749	Ref	DECAL REFERENCE CHART	F
1	2080040	3	Fastener	
2	2080057	4	Fastener	
3	8990147	1	Holder, Manual	
100	1001239270	1	Master Decal Kit	D
101	1701504	1	Decal - Hydraulic Oil	
102	1701640	1	Decal - Manual	
103	1703819	4	Decal - Direction Arrow	
104	1001248126	1	Decal – Manual Descent Instructions	
105	1704016	2	Decal - Fork Lift	
106	1704277	4	Decal - Lanyard Attach	
107	1704412	1	Decal - Hydraulic Oil	
108	1001132359	1	Decal - Control Box Locate	
109	1001162864	2	Decal - Lift Point/Tie Down	
110	1001212290	1	Decal - Tie Down	
111	1001212291	2	Decal - Lifting Lug	
112	1001237899	1	Decal - Arms Prop	
201	1702155	1	Decal - Battery Disconnect	
202	1704684	1	Decal - Danger/Warning	
203	1001146794	1	Decal - Battery/Charger Service	
204	1705311	4	Decal - Crushing Hazard	
205	1001211779	4	Decal - Electrocution	
206	1001212292	1	Decal - No Lifting	
207	1001212293	1	Decal - No Forklift	
208	1001237538	2	Decal - Battery Spacer	
209	1704340	1	Decal - Warning Battery Ventilation	
211	1001131270	1	Decal - Patent	
212	1001223971	1	Decal - Yearly Inspection	
213	1001215749	4	Decal - Danger Electrocution	
214	1001228370	1	Decal - ICES	
215	1001231801	1	Decal - Warning Prop 65	

FIGURE 8-7. DECAL INSTALLATION (KOREAN SPECS)

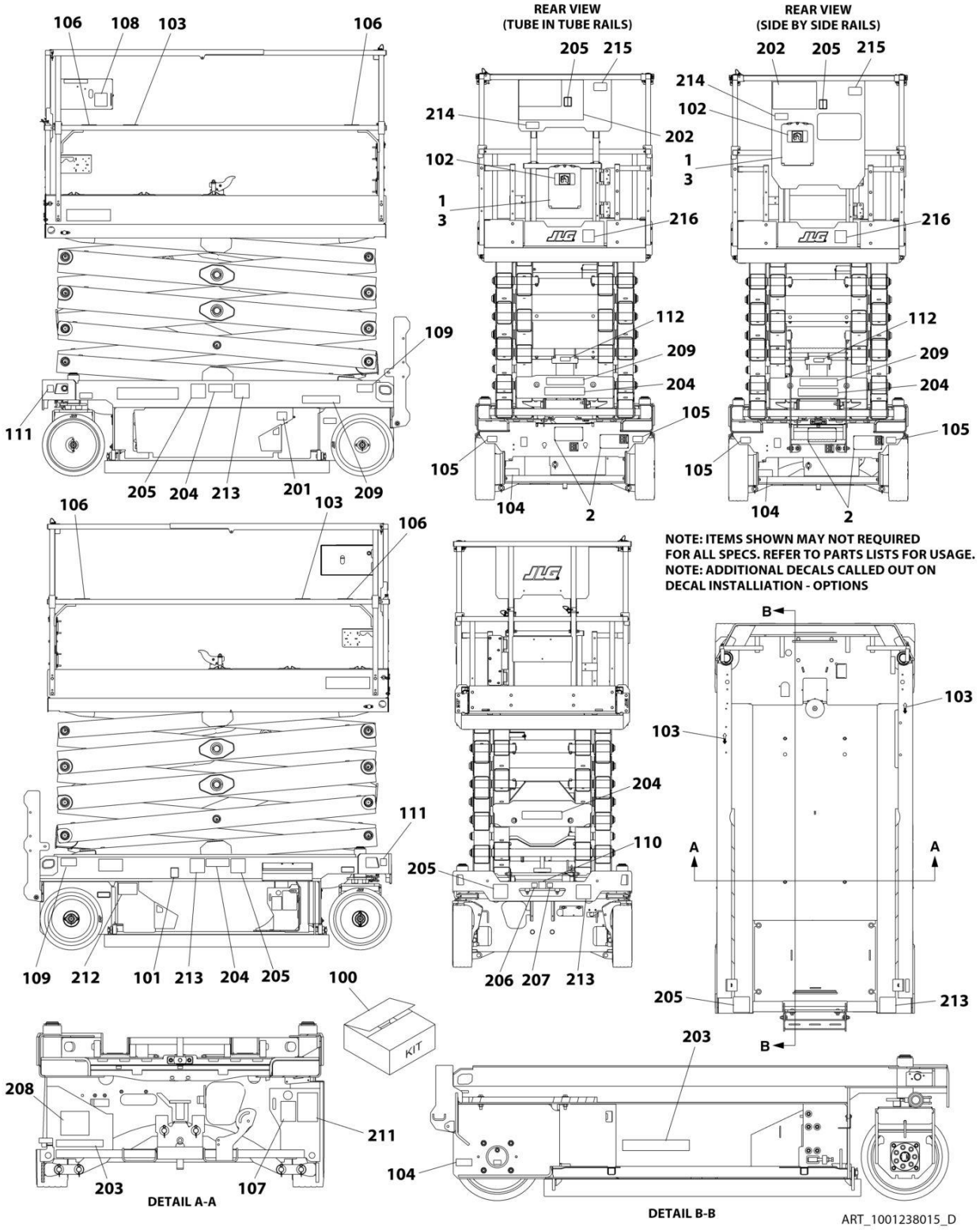

FIGURE 8-7. DECAL INSTALLATION (KOREAN SPECS)

ITEM	PART NUMBER	QTY	DESCRIPTION	REV
	1001238015	Ref	DECAL INSTALLATION (ENGLISH/KOREAN LANGUAGES)	D
	1001237749	Ref	DECAL REFERENCE CHART	H
1	2080040	3	Fastener	
2	2080057	4	Fastener	
3	8990147	1	Holder, Manual	
100	1001239270	1	Master Decal Kit	D
101	1701504	1	Decal - Hydraulic Oil	
102	1701640	1	Decal - Manual	
103	1703819	4	Decal - Direction Arrow	
104	1001248126	1	Decal – Manual Descent Instructions	
105	1704016	2	Decal - Fork Lift	
106	1704277	4	Decal - Lanyard Attach	
107	1704412	1	Decal - Hydraulic Oil	
108	1001132359	1	Decal - Control Box Locate	
109	1001162864	2	Decal - Lift Point/Tie Down	
110	1001212290	1	Decal - Tie Down	
111	1001212291	2	Decal - Lifting Lug	
112	1001237899	1	Decal - Arms Prop	
201	1702155	1	Decal - Battery Disconnect	
202	1001162115	1	Decal - Danger/Warning	
203	1001146794	1	Decal - Battery/Charger Service	
204	1001215751	4	Decal - Crushing Hazard	
205	1001211779	4	Decal - Electrocution	
206	1001212292	1	Decal - No Lifting	
207	1001212293	1	Decal - No Forklift	
208	1001237538	1	Decal - Battery Spacer	
209	1707022	2	Decal - Warning Battery Ventilation	
212	1001224048	1	Decal - Yearly Inspection	
213	1001215750	4	Decal - Danger Electrocution	

FIGURE 8-8. DECAL INSTALLATION (LATIN AMERICAN SPECS)

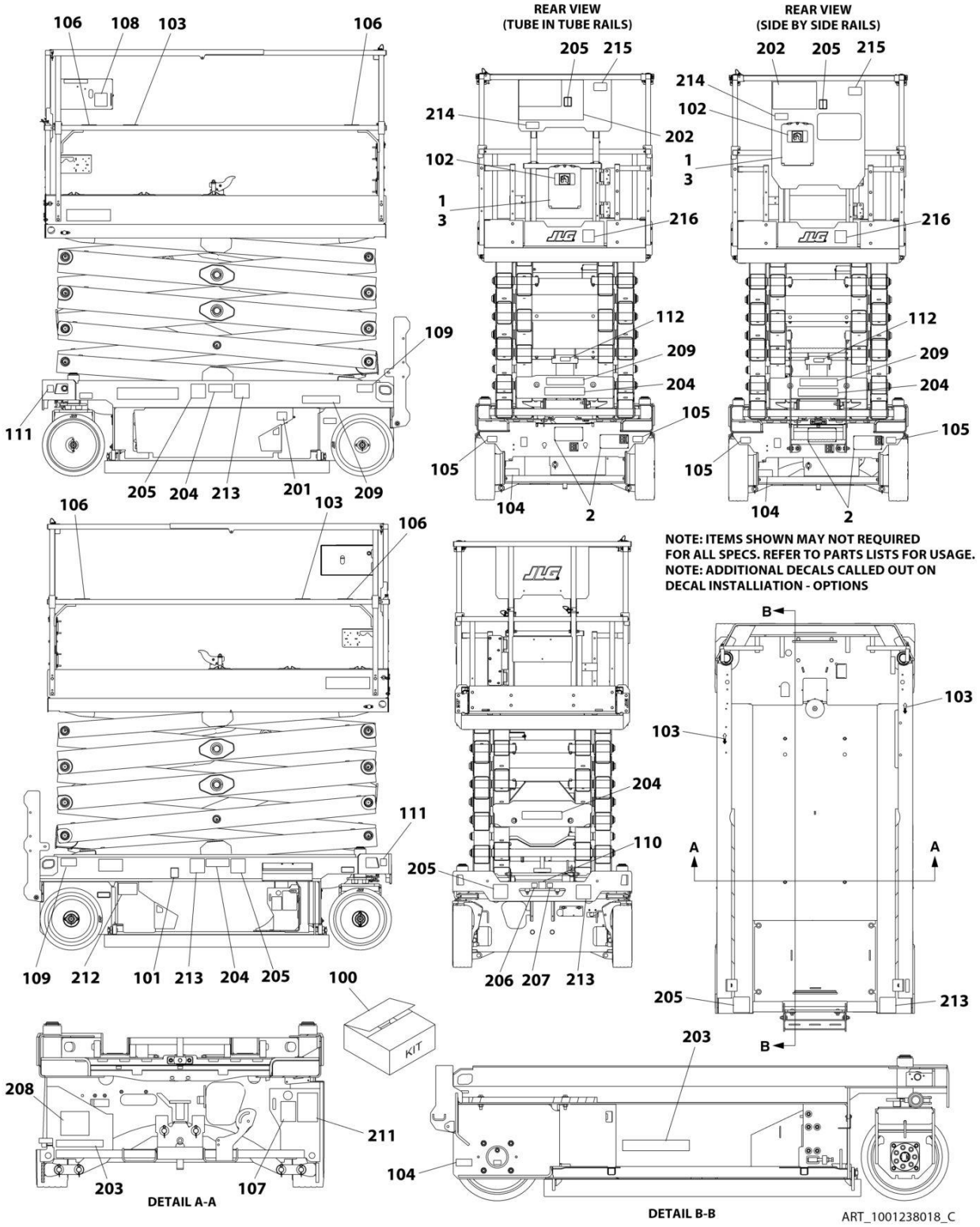

FIGURE 8-8. DECAL INSTALLATION (LATIN AMERICAN SPECS)

ITEM	PART NUMBER	QTY	DESCRIPTION	REV
	1001238018	Ref	DECAL INSTALLATION (ENGLISH/SPANISH LANGUAGES)	C
	1001237749	Ref	DECAL REFERENCE CHART	F
1	2080040	3	Fastener	
2	2080057	4	Fastener	
3	8990147	1	Holder, Manual	
100	1001239270	1	Master Decal Kit	D
101	1701504	1	Decal - Hydraulic Oil	
102	1701640	1	Decal - Manual	
103	1703819	4	Decal - Direction Arrow	
104	1001248126	1	Decal – Manual Descent Instructions	
105	1704016	2	Decal - Fork Lift	
106	1704277	4	Decal - Lanyard Attach	
107	1704412	1	Decal - Hydraulic Oil	
108	1001132359	1	Decal - Control Box Locate	
109	1001162864	2	Decal - Lift Point/Tie Down	
110	1001212290	1	Decal - Tie Down	
111	1001212291	2	Decal - Lifting Lug	
112	1001237899	1	Decal - Arms Prop	
201	1702155	1	Decal - Battery Disconnect	
202	1704691	1	Decal - Danger/Warning	
203	1001146794	1	Decal - Battery/Charger Service	
204	1705316	4	Decal - Crushing Hazard	
205	1001211779	4	Decal - Electrocution	
206	1001212292	1	Decal - No Lifting	
207	1001212293	1	Decal - No Forklift	
208	1001237538	1	Decal - Battery Spacer	
209	1704339	2	Decal - Warning Battery Ventilation	
212	1001224049	1	Decal - Yearly Inspection	
213	1001215748	4	Decal - Danger Electrocution	

FIGURE 8-9. DECAL INSTALLATIONS - OPTIONS

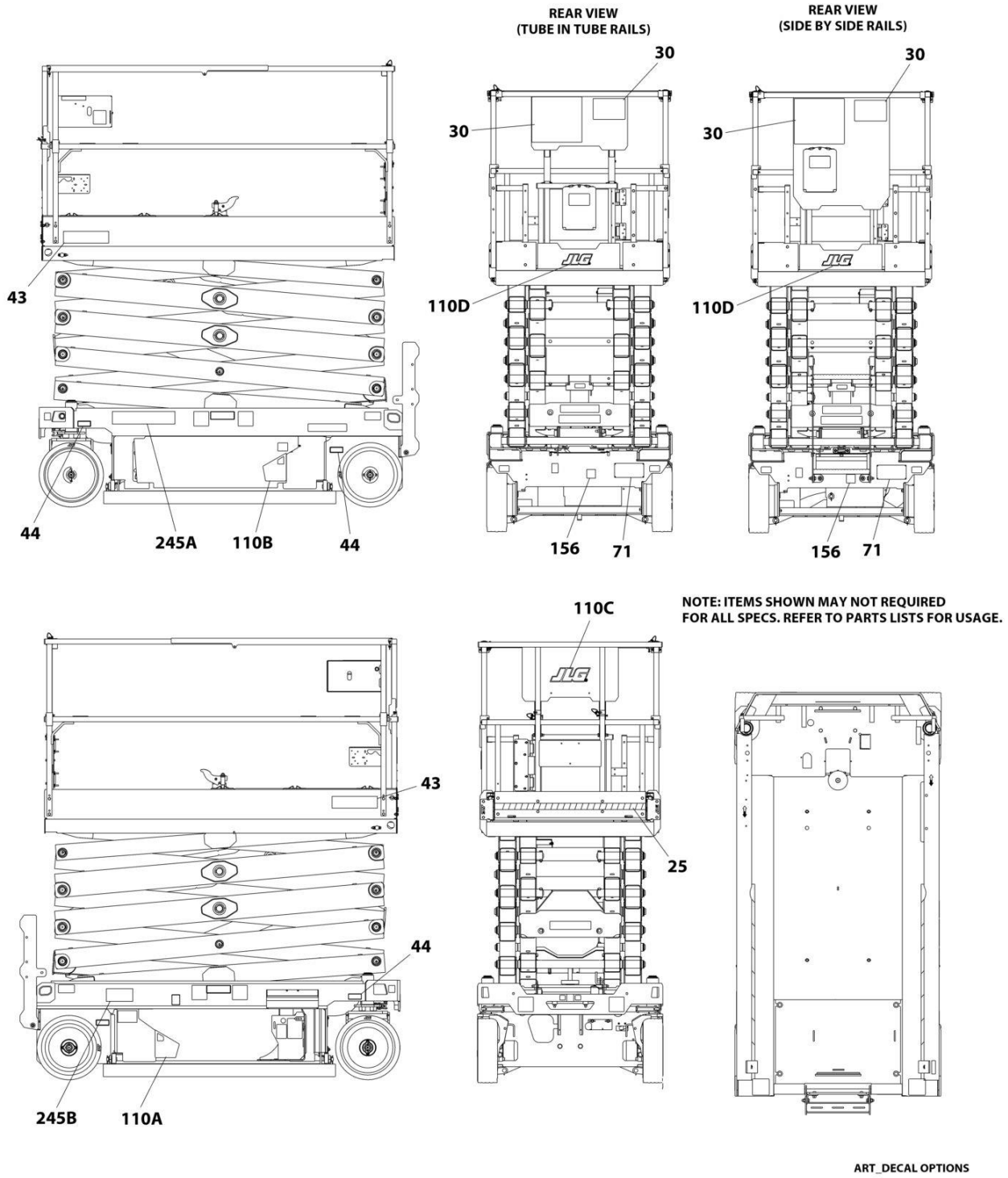

FIGURE 8-9. DECAL INSTALLATIONS - OPTIONS

ITEM	PART NUMBER	QTY	DESCRIPTION	REV
		Ref	DECAL INSTALLATION - OPTIONS:	
25	1001209906	Ref	Corner Stripes Installation	
25	4420051	30 in/ 75 cm	Tape, Safety	
30		Ref	Decal - Capacity Options	
30	1001239684	1	Decal - Capacity (507 LB/ 230 KG)	
30	1001244506	Ref	Decal - Capacity (with Dual Languages)	
30	1001239684	1	Decal - Capacity (507 LB/ 230 KG)	
30	1001216865	1	Plate, Decal Mounting (Not Shown)	
30	1001248681	1	Decal - Capacity (507 LB/ 230 KG) (Indoor Only (Australian Specs)	
43	1001257174	2	Decal - Model Designation - R2632	
44	1706310	4	Decal - Maximum Tire Load	
71	See Note	NSS	Decal - Manufacturing Serial Number (Note: Not Available for Purchase)	
110	1001255102	Ref	JLG Decal Installation	A
110A	1001255104	1	Decal - Door (RH)	
110B	1001255105	1	Decal - Door (LH)	
110C	1001256675	1	Decal - JLG	
110D	1001256676	1	Decal - JLG	
156	1001173703	1	Decal - EAC (Russian/CIS Specs)	
245	1001236984	Ref	Decal Installation - ClearSky	B
245A	1001116208	1	Decal - ClearSky	
245B	1001120989	1	Decal - Radio Frequency	

SECTION 9 - RECOMMENDED SERVICE PARTS STOCK

FIGURE 9-1. RECOMMENDED SERVICE PARTS STOCK

ITEM	PART NUMBER	QTY	DESCRIPTION	REV
		Ref	Note: The following list will service one machine (built to current production per date on the front cover) with emergency repair parts which can be installed in the field. Parts from the list should be replaced when inventory is depleted to keep service parts stock supplied. For further information, contact your JLG dealer or the JLG Industries Parts Department.	
		Ref	STANDARD PARTS	
	70005423	6	Hydraulic Filter Service Kit	
	70006297	1	Coil	
	70005893	1	Coil	
	3740150	1	Relay	
	4360328	1	Switch, Toggle	
	4360469	1	Switch, Key	
	2860030	1	Key, Replacement	
	4360475	1	Switch, Mushroom	
	3080007	1	Magnet, Latch	
	1600402	1	Controller, Drive/Steer	
	4360345	1	Switch, Toggle	
	1001200633	1	Switch, Push Button	
	8229242	2	Fuse 5Amp	
	8229244	2	Fuse 15 Amp	
		Ref	VARIABLE PARTS	
	1001203871	1	Switch, Roller	
	1001186466	1	Sensor, Tilt	
	1001200629	1	Module, Control	
	1001216062	1	Module, Power	
	4360336	1	Switch, Toggle (Machines with Inverter)	
	1001225164	1	Sensor, Pressure Transducer	
	1001235104	1	Sensor, Pressure Transducer	
	1001228112	1	Module, Platform	
	1001181045	1	Breaker 30mAmp/16Amp (CE & UK CA Specs Machines)	
	1001189171	1	Breaker 30mAmp (CE & UK CA Specs Machines)	
	1001189172	1	Breaker 16Amp Double (CE & UK CA Specs Machines)	

SECTION 10 - SPECIAL OPTIONS

FIGURE 10-1. SPECIAL OPTIONS

ITEM	PART NUMBER	QTY	DESCRIPTION	REV
		Ref	Note: This list is to accommodate machines ordered with special equipment. Options may not be applicable to all models. For more specific parts information contact the JLG Parts Department.	
		Ref	SPECIAL OPTIONS	
	1001236903	Ref	Antivandalism Package (Factory Installed)	
	1001249639	Ref	Antivandalism Add-on Kit (Dealer Installed)	
	1001255597	Ref	Can Battery Charger Kit (Dealer Installed)	
		Ref	ClearSky Installation Options (Factory Installed):	
	1001278847	Ref	ClearSky Installation - 3-Wire	
	1001251146	Ref	ClearSky Installation - Canbus (ANSI, ANSI Export, Australian, CE, CSA & UK CA Specs)	
		Ref	ClearSky Add-on Kit Options (Dealer Installed):	
	1001265376	Ref	ClearSky Add-on Kit - Canbus (ANSI, ANSI Export & CSA Specs) (Dealer Installed):	
	1001237257	Ref	ClearSky Add-on Kit - Canbus (ANSI Export, CE & UK CA Specs) (Dealer Installed):	
	1001248502	Ref	ClearSky Add-on Kit - Canbus (Australian Specs) (Dealer Installed):	
	1001248503	Ref	ClearSky Add-on Kit - Canbus (China) (Dealer Installed):	
	1001248689	Ref	ClearSky Add-on Kit - Access Control (Dealer Installed):	
	1001276923	Ref	ClearSky Add-on Kit - GT1030 (Contact JLG for Approved Countries)	
	1001278848	Ref	ClearSky Add-on Kit - 3 Wire GT1030 (Contact JLG for Approved Countries)	
		Ref	Decal Kit Options:	
	1001274825	Ref	Decal Kit - Master	
	1001234319	Ref	Drive Motor Covers installation	
		Ref	Electrical Connector Kits	
	1001148902	Ref	Amp/Tyco Electrical Connector Kit	
	1001148903	Ref	Deutsch DT Electrical Connector Kit	
	1001148904	Ref	Deutsch HD Electrical Connector Kit	
	1001148905	Ref	Packard Electrical Connector Kit	
	1001148906	Ref	Various Electrical Connector Kit	
	1001246082	Ref	European Subassembly Kit	
	1001218728	Ref	Fire Extinguisher Installation	
	1001248843	Ref	Foot Latch Add-on Kit (Delaer Installed)	
	1001208061	Ref	Footswitch Installation (Japanese & Korean Specs Only)	
	1001269646	Ref	Heavy Duty Tool Tray/Work Surface Kit (Dealer Installed)	
	1001220933	Ref	Height Restricter Switch Installation	
	1001249638	Ref	Inverter Add-on Kit (Dealer Installed)	
	1001250532	Ref	Mobile Control Add-on Kit (Dealer Installed)	
	1001229076	Ref	Noise Reduction Add-on Kit (Dealer Installed)	
	1001229728	Ref	Overhead Protectin Add-on Kit (Dealer Installed)	
	1001270721	Ref	Pipe Racks Kit (Dealer Installed)	
	1001300605	Ref	Pin Pivot Kit	
	1001269651	Ref	Platform Control Box Cover Add-on Kit (Dealer Installed)	
	1001262557	Ref	Platform Self Closing Gate Add-on Kit (Dealer Installed)	
	1001262558	Ref	Platform Self Closing Gate Add-on Kit (Dealer Installed)	
	1001225790	Ref	Platform Extension Handles Add-on Kit (Dealer Installed)	
	1001239481	Ref	Remote Tow Installation	

ITEM	PART NUMBER	QTY	DESCRIPTION	REV
	1001224583	Ref	Service Kits List	W
	1001254721	Ref	SkySense Level 1 Add-on Kit (Dealer Installated)	
	1001254542	Ref	SkySense Level 2 Add-on Kit (Dealer Installated)	
	1001255883	Ref	SkySense Level 1 Installation (Factory Installated)	
	1001255669	Ref	SkySense Level 2 Installation (Factory Installated)	
	1001249229	Ref	Strobe (Single) Light Add-on Kit (Dealer Installed)	
	1001249230	Ref	Strobe (Dual) Light Add-on Kit (Dealer Installed)	
		Ref	Tools for Service	
	2901443	1	Analyzer Kit	
	1001232474	1	Benchtop Harness	
	8896941	1	Wire Stripper	
	7002821	1	Wire Crimper (To install wire ends to wires)	
	7002823	1	Pin/Socket Extractor - Universal (To Remove Pins/Sockets from Connectors)	
	4460467	1	Extractor - 16-18 Gauge (For Removal Pins/Sockets from Deutsch Connectors)	
	4460510	1	Extractor - 12-14 Gauge (For Removal of Pins/Sockets from Deutsch Connectors)	
	7002822	1	Screwdriver, Potentiometer (To Adjust Drive Controllers)	
	7016654	1	Screwdriver, Magnetic	
	7004275	1	Seal Installation Tool - 1in	
	7004276	1	Seal Installation Tool - 1-1/2in	
	7002826	1	Seal Installation Tool - 2in	
	1001264614	Ref	Tool Tray	
	1001262959	Ref	Voltage Regulator Location Add-on Kit (Dealler Installed)	

PART NUMBER INDEX

0100011.....13, 15, 21, 23, 25, 27, 29, 31, 45, 73, 87, 89, 91
0100051.....61, 63, 65, 67, 69
0140030..... 97
0140043.....49, 53
0275216.....131, 201
0275217.....133, 203
0275452.....135, 205
0275453.....137, 207
0275454.....139, 209
0440223..... 107
0440259.....13, 121
0440263..... 21
0440264..... 79
0440265..... 79
0480100..... 101
0630587.....49, 51, 53, 71
0630613.....73, 81
0700412.....49, 53
0700610.....78, 107
0700612.....21, 23, 31, 57, 78
0700616..... 103
0700617.....49, 51
0700621..... 93
0700814.....78, 131, 133, 135, 137, 139, 143, 175
0700815..... 21
0700817.....73, 101
0700818.....89, 91, 93
0700819.....85, 95
0700820..... 89
0700823..... 21
0700835..... 97
0701015.....73, 78
0701019.....81, 103
0701021..... 78
0701024..... 81
0760408.....129, 131, 133, 135, 137, 139, 145
0760608.....91, 111
0760610.....41, 49, 51, 71, 95, 97, 111, 143
0760612.....25, 27, 29, 37
0760810.....45, 57, 87, 89, 109
0760812.....55, 87
0760820..... 109
0760827..... 45
0761012.....13, 45
0761014..... 87
0761015..... 39
0761019..... 91
0761221..... 73
0861731.....199, 205, 207, 209
0861781.....201, 203
0861880..... 149
0962006..... 119
1001047064 97
1001091102 ....21, 33, 35, 49, 53
1001097150 .....143, 147
1001100341 201
1001100342 203
1001100345 205
1001100346 209
1001100347.....207
1001101540.....71
1001102258.....129, 131, 133, 135, 137, 139, 141, 143, 145
1001102489.....159, 161, 163, 165, 167, 169, 171, 173
1001102771.....155, 157
1001103012.....178
1001103471.....143, 175
1001104498.....178
1001110302.....21
1001112112.....65
1001113961.....178
1001116208.....229
1001116812.. 55, 57, 155, 157, 177
1001118274.....55, 57
1001118812.....55, 153
1001120204.....131, 133, 135, 137, 139
1001120205.....149, 151
1001120989.....229
1001125483.....71
1001125677. 55, 153, 178
1001125927.....147
1001128888.....78
1001130220.... 25, 27, 29, 31, 41, 49, 51, 78, 97
1001130590.....49, 51
1001131270.....213, 223
1001132358.....97
1001132359.....213, 215, 217, 219, 221, 223, 225, 227
1001132361.....97
1001134280.....175
1001134821.....95
1001136757.....71
1001137675.....78, 87
1001142173.....71
1001142174.....71
1001143009.....71
1001143010.....71
1001143501.....125
1001144147... 55, 57, 153
1001144295.....178
1001144296.....178
1001146794.....213, 215, 217, 221, 223, 225, 227
1001146795.....219
1001146963.....78
1001148902.....234
1001148903.....234
1001148904.....234
1001148905.....234
1001148906.....234
1001151629.....177
1001152483.....151
1001153785.....13
1001154378.....89, 91
1001156186.....89
1001157547.....71
1001159186.....177, 197
1001162115.....225
1001162864.....213, 215, 217, 219, 221, 223, 225, 227
1001162886 177
1001162887 .....57, 177
1001163340 .....57, 177
1001173703 229
1001179447 .....13, 121
1001181045 .....149, 232
1001182806 37
1001186466 .....23, 232
1001187587 .....89, 91
1001187816 145
1001188116 145
1001189171 .....151, 232
1001189172 .....151, 232
1001189762 107
1001192401 .....55, 178
1001194421 197
1001196589 178
1001196634 157
1001196635 57
1001197396 13
1001200561 25
1001200629 ...49, 51, 232
1001200631 .....49, 51
1001200632 59
1001200633 232
1001200812 .....181, 189
1001200819 .....97, 197
1001201705 45
1001201706 45
1001201708 ....61, 63, 65, 67, 69
1001201711 ....61, 63, 65, 67, 69
1001201885 .....177, 197
1001202184 .....185, 191
1001202773 15
1001202851 45
1001202987 21
1001203450 45
1001203836 125
1001203846 125
1001203869 21
1001203870 21
1001203871 .....21, 232
1001203872 21
1001204495 37
1001205345 78
1001205409 .....57, 177
1001205410 177
1001205411 177
1001205412 177
1001205422 87
1001205424 87
1001205430 87
1001205598 31
1001205751 13
1001206225 91
1001206226 91
1001206995 29
1001207009 .....25, 27
1001207293 59
1001207494 .....49, 51
1001207970 161
1001207973 173
1001207974 .....159, 165, 167, 169, 171, 175
1001208061 234
1001208852 87
1001209482.....135, 137, 151
1001209596.....97
1001209682.....49, 51
1001209776.....131, 133, 139, 149
1001209906.....229
1001210064.....87
1001210079.....55
1001210302.....89, 91
1001210401.... 61, 63, 65, 67, 69
1001210440.....71
1001210446.....91
1001210447.....91
1001210458.....89, 91
1001210586.....89, 91
1001210605.....71
1001210878.....71
1001210879.....71
1001210881.....71
1001210882.....71
1001210963.....89, 91
1001210966.....49, 51
1001210967.....71
1001211777.....213
1001211779.....213, 221, 223, 225, 227
1001212035.....197
1001212036.....197
1001212187.....19
1001212290.....213, 215, 217, 219, 221, 223, 225, 227
1001212291.....213, 215, 217, 219, 221, 223, 225, 227
1001212292.....213, 215, 217, 219, 221, 223, 225, 227
1001212293.....213, 215, 217, 219, 221, 223, 225, 227
1001212294.....45
1001213264.....15, 17
1001213448.....178
1001213838.....87
1001213875.....45
1001213886.....97
1001213928.....19
1001214217.....23
1001214347.....67
1001214526.....21
1001214528.....21
1001214534.....21
1001214810.....73
1001215216.....35
1001215747.....221
1001215748.....217, 227
1001215749.....223
1001215750.....225
1001215751.....225
1001215752.....221
1001215762.....49, 51
1001215953.....21
1001216062... 49, 51, 232
1001216180.....63
1001216648.....217
1001216650.....217

1001216823 93
1001216865 229
1001217059 23
1001217164 ..... 149, 151
1001218285 97
1001218307 21
1001218573 73
1001218728 234
1001220409 95
1001220410 95
1001220893 97
1001220933 234
1001220995 95
1001221244 103
1001221275 103
1001221276 103
1001221949 163
1001222587 93
1001222914 103
1001223055 213
1001223262 187
1001223263 183
1001223650 189
1001223651 191
1001223971 223
1001224048 225
1001224049 227
1001224051 221
1001224052 217
1001224583 235
1001225164 ..... 78, 232
1001225790 234
1001226277 103
1001226749 97
1001226791 78
1001226901 103
1001227219 175
1001227267 ..... 143, 175
1001227268 143
1001227269 147
1001227728 103
1001227855 21
1001228112 232
1001228123 .... 61, 63, 65, 67, 69
1001228184 103
1001228191 147
1001228370 ..... 213, 223
1001228388 155
1001228406 39
1001229076 234
1001229110 .... 61, 63, 65, 67, 69
1001229728 234
1001229732 89
1001229733 89
1001229734 89
1001229739 89
1001229740 89
1001229741 89
1001229742 89
1001229792 73
1001230248 89
1001230249 89
1001231405 89
1001231801 ..... 213, 223
1001232257 89
1001232474 235
1001232622 89
1001233795 .....78, 195
1001234006 .....89, 91
1001234007 .....89, 91
1001234141 91
1001234142 91
1001234204 78
1001234319 234
1001234384 85
1001234385 87
1001234386 91
1001234387 89
1001234407 87
1001234479 .....49, 177
1001234797 21
1001234798 21
1001234838 13
1001234842 39
1001234858 73
1001234862 73
1001235008 49
1001235104 .....78, 232
1001235106 61
1001235286 89
1001235555 85
1001235559 .....49, 51
1001235834 61
1001235863 111
1001235941 101
1001235954 71
1001235955 39
1001236132 71
1001236139 .... 25, 27, 29, 31
1001236269 78
1001236486 78
1001236487 78
1001236488 78
1001236623 91
1001236624 89
1001236632 63
1001236801 125
1001236802 125
1001236803 125
1001236809 125
1001236849 21
1001236903 234
1001236984 229
1001237132 .....181, 183, 185, 187, 193
1001237257 234
1001237400 129
1001237401 141
1001237538 .....213, 215, 217, 219, 221, 223, 225, 227
1001237696 13
1001237707 39
1001237708 39
1001237737 21
1001237749 .....213, 215, 217, 219, 221, 223, 225, 227
1001237824 78
1001237855 41
1001237856 41
1001237887 51
1001237899 .....213, 215, 217, 219, 221, 223, 225, 227
1001237989 65
1001237991 67
1001238014 213
1001238015 225
1001238016 221
1001238017 217
1001238018 227
1001238019 223
1001238020 219
1001238021 215
1001238130 135
1001238131 137
1001238132 139
1001238133 131
1001238134 133
1001238135 145
1001238198 ..... 131, 133, 135, 137, 139, 143
1001238392 55
1001238684 78
1001239224 ..... 33, 35
1001239269 .... 63, 65, 67, 69
1001239270 ..... 213, 215, 217, 219, 221, 223, 225, 227
1001239386 53
1001239479 78
1001239481 234
1001239661 ..... 33, 35
1001239674 81
1001239675 181
1001239676 185
1001239677 183
1001239678 187
1001239679 193
1001239684 229
1001239892 81
1001239894 81
1001239925 78
1001239926 85
1001239927 78
1001239928 78
1001239929 78
1001239930 78
1001239931 78
1001241352 81
1001241353 81
1001241358 81
1001241737 79
1001241738 79
1001241739 79
1001241740 79
1001241741 79
1001241742 79
1001241743 79
1001241744 79
1001241894 45
1001242230 125
1001242539 ..... 33, 35
1001242697 33
1001242990 35
1001243487 125
1001243488 125
1001243781 21
1001244284 15
1001244298 221
1001244323 143
1001244394 57
1001244416 .....78, 119
1001244506 229
1001244644 175
1001244885 57
1001244900 143
1001245293 57
1001245299 57
1001245353 57
1001245739 .....143, 147
1001245743 147
1001245744 .....143, 147
1001245747 143
1001246082 234
1001246674 79
1001247627 125
1001247706 85
1001247707 78
1001248126 .....213, 215, 217, 219, 221, 223, 225, 227
1001248502 234
1001248503 234
1001248631 159
1001248632 161
1001248634 163
1001248679 .....45, 47
1001248681 229
1001248689 234
1001248768 57
1001248773 55
1001248843 234
1001249054 69
1001249229 235
1001249230 235
1001249638 234
1001249639 234
1001250532 234
1001251146 234
1001252626 107
1001253726 111
1001253800 115
1001253952 27
1001254027 ... 27, 55, 153
1001254028. 27, 155, 157
1001254542 235
1001254721 235
1001255102 229
1001255104 229
1001255105 229
1001255597 234
1001255669 235
1001255883 235
1001256642 .....25, 27
1001256643 .....29, 31
1001256675 229
1001256676 229
1001257174 229
1001258356 55
1001258446 97
1001258498 69
1001258691 55
1001258768 165
1001258770 167
1001258771 169
1001258772 171
1001261131 115
1001262150 115
1001262221 113
1001262557 234

1001262558 234
1001262655 97
1001262959 235
1001263256 25
1001263257 27
1001263258 29
1001263259 31
1001263294 173
1001263296 175
1001264614 235
1001265376 234
1001269646 234
1001269651 234
1001270533 101
1001270631 101
1001270721 234
1001270855 101
1001271412 101
1001273907 107
1001273909 107
1001273957 105
1001273958 105
1001273960 107
1001273961 109
1001273962 109
1001273964 109
1001273966 109
1001273968 111
1001273969 111
1001274168 115
1001274559 ..... 49, 51
1001274604 97
1001274605 97
1001274659 97
1001274661 113
1001274825 234
1001274837 105
1001274838 107
1001274839 111
1001275631 105
1001276923 234
1001278847 234
1001278848 234
1001283410 53
1001287711 101
1001300605 234
1001370008 ..... 45, 125
1001370010 78
1001380040 73
1001380041 73
1001380042 73
1060379 ..... 101, 105, 107
1060908 ..... 147, 149, 151
1060998 ..... 61, 63, 65, 67, 69
1061042 109
1062255 55
1120555 105
1321293 ..... 25, 27, 29, 31, 71
1321752 45
1380132 93
1380153 13
1580023 105
1580024 105
1600402 ..... 97, 99, 232
1671207 199
1701504 ..... 213, 215, 217, 219, 221, 223, 225, 227
1701640 ..... 213, 215, 217, 219, 221, 223, 225, 227
1702010 111
1702155 ..... 213, 215, 217, 219, 221, 223, 225, 227
1703464 ..... 129, 131
1703813 213
1703816 213
1703819 ..... 97, 213, 215, 217, 219, 221, 223, 225, 227
1704016 ..... 213, 215, 217, 219, 221, 223, 225, 227
1704260 97
1704277 ..... 213, 215, 217, 219, 221, 223, 225, 227
1704339 227
1704340 223
1704341 217
1704344 221
1704412 ..... 213, 215, 217, 219, 221, 223, 225, 227
1704684 223
1704691 227
1704699 217
1705195 221
1705311 223
1705316 227
1705670 ..... 215, 219
1705671 ..... 215, 219
1705673 ..... 215, 219
1705997 105
1706310 229
1707022 225
2080040 ..... 87, 89, 91, 213, 215, 217, 219, 221, 223, 225, 227
2080057 ..... 213, 215, 217, 219, 221, 223, 225, 227
2110404 121
2220371 119
2220373 125
2220375 125
2220497 125
2220502 125
2220628 125
2220883 119
2400060 ..... 57, 155, 157, 177
2420172 ..... 49, 51
2560088 93
2560190 93
2600281 ..... 89, 91
2700100 105
2860030 ..... 49, 51, 232
2901443 235
2902431 ..... 129, 199
3080007 ..... 89, 91, 232
3121792 57
3252507 ..... 133, 135, 137, 139, 141, 145
3290305 ..... 33, 35
3290405 ..... 21, 49, 53, 71, 78, 95, 97, 129, 131, 133, 135, 137, 139, 143, 145
3290505 175
3290601 ..... 23, 143
3290605 ..... 25, 27, 29, 31, 37, 49, 51, 53, 57, 71, 78, 131, 133, 135, 137, 139
3290606 ..... 89, 91, 93, 95, 103, 107, 111
3290801 ..... 21, 45, 109
3290805 ..... 21, 45, 73, 78, 85, 87, 101, 131, 133, 135, 137, 139, 143, 175
3290806 ..... 89, 91, 93, 95, 97
3291005 ..... 39, 45, 73, 81, 87
3291006 ..... 81, 91, 103
3291007 ..... 73, 78
3291201 73
3321402 78
3331211 15
3421453 107
3422219 ..... 91, 105, 107
3422661 101
3423037 13
3423243 73
3423278 97
3430636 21
3430814 87
3430816 87
3431212 21
3431218 21
3450302 21
3450303 73
3450403 87
3450505 21
3450508 19
3460334 105
3520072 ..... 81, 89, 91, 107
3574505 111
3740150 ..... 49, 53, 71, 232
3760115 78
3760170 ..... 105, 107
3760217 13
3760387 78
3820019 93
3841143 ..... 73, 78
3841675 107
3860111 91
3900355 105
3900381 175
3910804 ..... 49, 51
3931412 105
3931508 105
3990001 157
4010310 ..... 33, 35
4010408 ..... 95, 143
4010608 ..... 78, 89, 91
4010610 ..... 131, 133, 135, 137, 139
4010616 91
4010617 ..... 89, 91
4010618 ..... 89, 91
4031509 97
4031511 21
4031512 78
4031708 ..... 23, 31
4060803 97
4060906 97
4060944 177
4160078 78
4160202 21
4160214 73
4191706 107
4220227 107
4240003 ..... 105, 107
4240017 ..... 25, 27, 29, 31, 45, 49, 51, 53, 57, 61, 63, 65, 67, 69, 71, 78, 103, 129, 131, 133, 135, 137, 139, 141, 143, 145, 159, 161, 163, 165, 167, 169, 171, 175, 181, 183, 185, 187, 189, 191, 193
4240018 35
4240032 55
4240033 109
4240147 21
4240165 111
4340853 105
4340854 105
4340947 107
4360328 ..... 49, 51, 232
4360336 ..... 71, 232
4360345 232
4360469 ..... 49, 51, 232
4360475 ..... 49, 51, 97, 232
4420037 111
4420051 229
4420062 ..... 45, 79, 89, 91, 97, 101
4460042 177
4460115 177
4460138 129
4460183 ..... 177, 197
4460226 177
4460227 ..... 25, 27, 155, 177
4460234 103
4460247 177
4460256 177
4460259 177
4460260 177
4460265 197
4460267 197
4460315 ..... 129, 145
4460320 177
4460346 199
4460418 ..... 71, 177, 197
4460419 71
4460424 ..... 25, 27, 155
4460464 ..... 35, 37, 55, 57, 71, 103, 155, 157, 178, 181, 183, 185, 187, 189, 191, 193, 195, 197
4460465 ..... 33, 35, 55, 57, 103, 155, 157, 177, 178, 181, 183, 185, 187, 189, 191, 193, 195
4460466 ..... 55, 57, 71, 103, 153, 155, 157, 177, 181, 183, 185, 187, 189, 191, 195, 197
4460467 235
4460496 97
4460497 97
4460510 235
4460536 103
4460539 ..... 178, 183, 187, 195

4460662 ....135, 137, 139, 199
4460754 ....181, 183, 185, 187, 189, 191
4460761 177
4460871 .....155, 157, 178
4460872 ..... 155, 157
4460877 177
4460884 55, 57, 157, 177, 195
4460891 33, 35, 103, 155, 157, 177, 178, 183, 187, 195
4460894 ....177, 181, 183, 185, 187, 193
4460897 ..35, 37, 71, 155, 157, 177, 183, 187
4460899 ....181, 183, 185, 187, 189, 191, 193
4460905 .....155, 157, 178
4460932 .....55, 57, 157
4460933 .....55, 153, 177
4460943 55, 57, 153, 181, 183, 185, 187, 189, 191, 193
4460944 55, 57, 153, 155, 157, 177, 181, 183, 185, 187, 193
4460956 149
4460957 149
4460968 145
4460970 195
4461016 197
4461023 177
4461196 ..... 169, 201
4461198 201
4461199 ..... 171, 203
4461201 203
4461205 .....165, 205, 207
4461244 205
4461245 207
4461246 209
4461249 ..... 167, 209
4461257 ..... 131, 133
4461258 .....131, 133
4711400 .....105, 107
4711700 97
4711800 87
4740086 21
4740438 78
4740480 105
4740531 78
4811400 .. 71, 95, 97, 129, 131, 133, 135, 137, 139, 143, 145
4811700 .... 37, 49, 51, 53, 57, 71, 89, 91, 95, 97, 111, 131, 133, 135, 137, 139, 143
4811702 .... 21, 23, 25, 27, 29, 31, 41, 78, 93
4811900 .... 21, 45, 55, 57, 78, 85, 87, 89, 91, 93, 97, 131, 133, 135, 137, 139, 143
4811902 .... 21, 45, 73, 89, 95, 101, 109, 175
4812000 .... 13, 21, 73, 78, 81, 87, 91, 103
4812002 ..... 39, 45, 73
4812500 21
4831600 175
4846757 13
4923328 .... 61, 63, 65, 67, 69
5241200 15
5271808 45
5272117 15
5272122 15
70000082 99
70000084 99
70000683 99
70000684 99
70000685 99
70000686 99
70001250 99
70001251 99
70001252 99
70001253 99
70003650 99
70004239 121
70004241 121
70004585 119
70005236 119
70005419 121
70005420 121
70005421 121
70005423 ..... 45, 232
70005807 17
70005812 17
70005813 17
70005816 45
70005893 ..... 47, 232
70005898 47
70005899 47
70005900 47
70005903 47
70005909 47
70005911 47
70005918 15
70005919 15
70006244 17
70006245 17
70006297 232
70006301 47
70006351 45
70006352 45
70006724 17
70006725 17
70007055 119
70007101 119
70007102 119
70007103 119
70007104 119
70007105 119
70007106 119
70007513 17
70007593 47
70007594 47
70007595 47
70007596 47
70007597 47
70007598 47
70007599 47
70007600 47
70007601 47
70007602 47
70007946 45
70021209 47
70027244 119
7002821 235
7002822 235
7002823 235
7002826 235
7004275 235
7004276 235
7016654 235
7020175 ..... 49, 51, 97
7020176 ..... 49, 51, 97
7023308 17
7023310 17
7023311 17
7023315 17
7023318 17
7023321 17
7023322 17
7023324 17
7023328 17
7023329 17
7023407 17
7023408 17
7026174 17
7026179 17
7027365 99
7027367 99
7027765 99
7027766 99
80325 107
8229242 .....178, 232
8229244 .....178, 232
8750014 45
8896941 235
8990147 .... 213, 215, 217, 219, 221, 223, 225, 227

Corporate Office
JLG Industries, Inc.
1 JLG Drive
McConnellsburg, PA 17233-9533 USA

(717) 485-5161 (Corporate)
(877) 554-5438 (Customer Support)
(717) 485-6417

Visit our website for JLG Worldwide Locations.
www.jlg.com

OSHKOSH™