Illustrated Parts Manual

Models
400S
460SJ

SN 0300203771 to SN 0300272360*
SN 1300007289 to SN 1300007393
SN E300000100 to SN E300007988*
*** See Revision Log Page for exceptions**

P/N
3121672

August 1, 2021 - Rev R

ANSI

CE

AS/NZS

An Oshkosh Corporation Company

REVISION LOG

NOTE: The 400S may be manufactured by JLG Industries in the following countries: USA & Romania. The country of manufacture may be determined by the serial number located on the serial number nameplate. Machines manufactured in the USA will have a prefix number of 03 i. e. 03xxxxxxxx). Machines manufactured in Romania will have a prefix number of E3 (i. e. E3xxxxxxxx, or 13xxxxxxxx).

NOTES;

List of SN exceptions:
0300272174 to 0300272184, E300007847

Use Parts Manual 3121672 for these SNs also:
0300184729, 0300200144, 0300200145,0300200476, 0300200477, 0300202446, 0300202447, 0300202448, 0300202449, 0300202450, 0300203261, 0300203262, 0300203307, 0300203308, 0300203351, 0300203352, 0300203394, 0300203395, 0300203439, 0300203440, 0300203580, 0300203581, 0300203582, 0300203583, 0300203584, 0300203628, 0300203629, 0300203630, 0300203631, 0300203632, 0300203677, 0300203678, 0300203679, 0300203680, 0300203681, 0300203724, 0300203725, 0300203727, 0300203728

REVISION LOG:

March 12, 2015 - A - Original Issue Of Manual (Edit to B/M 1001166224 Revision C)
April 15, 2015 - B - Revised Manual (Edit to B/M 1001166224 Revision G)
June 1, 2015 - C - Revised Manual (Edit to B/M 1001166224 Revision G) (Revision 1)
August 15, 2015 - D - Revised Manual (Edit to B/M 1001166224 Revision H) (Revision 4)
November 20, 2015 - E - Revised Manual (Edit to B/M 1001166224 Revision L) (Revision 4)
February 19, 2016 - F - Revised Manual (Edit to B/M 1001166224 Revision O) (Revision 3)
May 16, 2016 - G - Revised Manual (Edit to B/M 1001166224 Revision Q) (Revision 1)
August 1, 2016 - H - Revised Manual (Edit to B/M 1001166224 Revision V) (Revision 3)
November 15, 2016 - I - Revised Manual (Edit to B/M 1001166224 Revision X) (Revision 5)
February 15, 2017 - J - Revised Manual (Edit to B/M 1001166224 Revision AD) (Revision 1)
May 5, 2017 - K - Revised Manual (Edit to B/M 1001166224 Revision AE) (Revision 3)
November 2, 2017 - L - Revised Manual (Edit to B/M 1001166224 Revision AE) (Revision 5)
February 1, 2018 - M - Revised Manual (Edit to B/M 1001166224 Revision AH) (Revision 2)
May 11, 2018 - N - Revised Manual (Edit to B/M 1001166224 Revision AI) (Revision 2)
August 10, 2018 - O - Revised Manual (Edit to B/M 1001166224 Revision AN) (Revision 2)
December 21, 2018 - P - Revised Manual (Edited to B/M 1001166224 Revision AR) (Revision 2)
April 3, 2020 - Q - Revised Manual (Edited to B/M 1001166224 Revision AR) (Revision 2)
August 1, 2021 - R - Revised Manual (Edited to B/M 1001166224 Revision AS) (Revision 2)

GENERAL INFORMATION

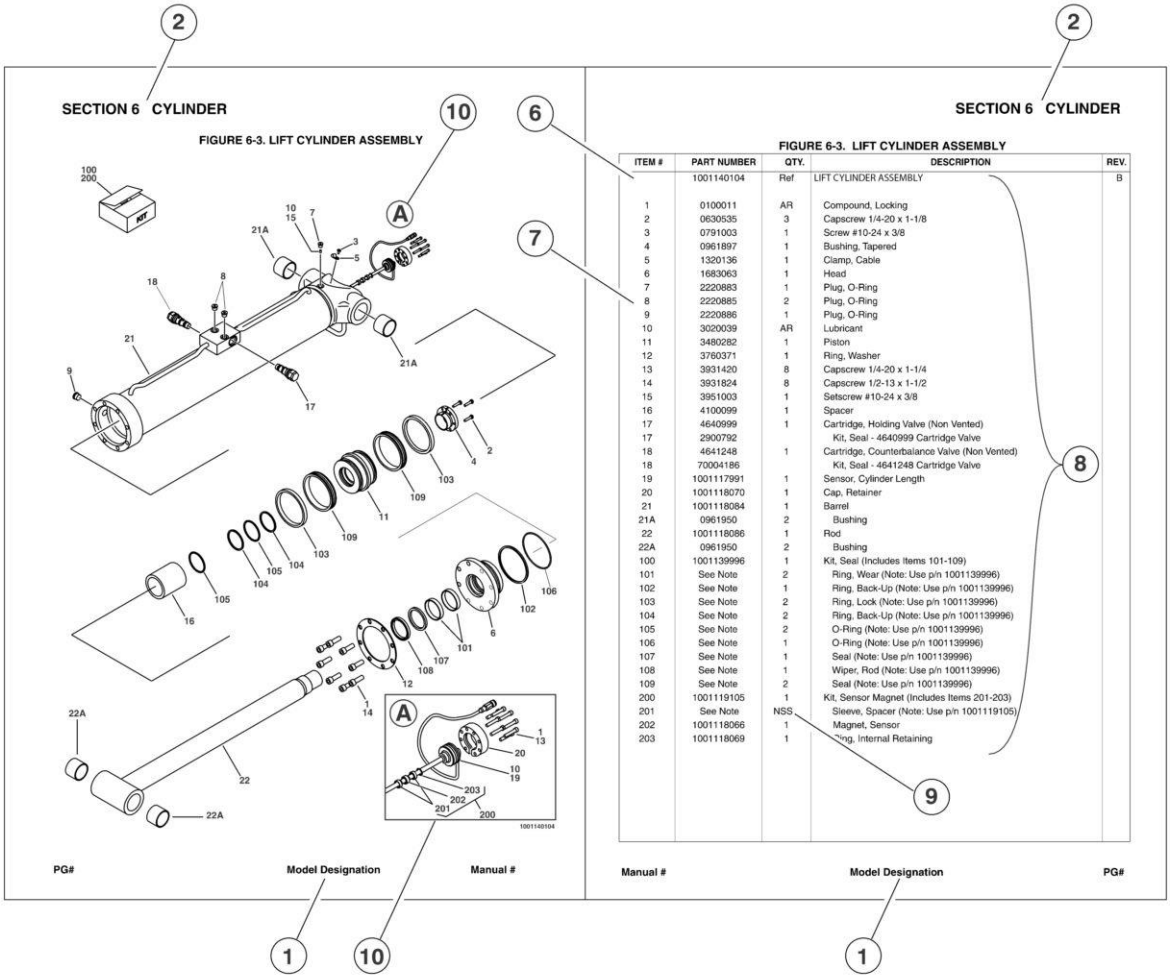

ITEM #	PART NUMBER	QTY.	DESCRIPTION	REV.
	1001140104	Ref.	LIFT CYLINDER ASSEMBLY	B
1	0100011	AR	Compound, Locking	
2	0630535	3	Capscrew 1/4-20 x 1-1/8	
3	0791003	1	Screw #10-24 x 3/8	
4	0961897	1	Bushing, Tapered	
5	1320136	1	Clamp, Cable	
6	1683063	1	Head	
7	2220883	1	Plug, O-Ring	
8	2220885	2	Plug, O-Ring	
9	2220886	1	Plug, O-Ring	
10	3020039	AR	Lubricant	
11	3480282	1	Piston	
12	3760371	1	Ring, Washer	
13	3931420	8	Capscrew 1/4-20 x 1-1/4	
14	3931824	8	Capscrew 1/2-13 x 1-1/2	
15	3951003	1	Setscrew #10-24 x 3/8	
16	4100099	1	Spacer	
17	4640999	1	Cartridge, Holding Valve (Non Vented)	
17	2900792		Kit, Seal - 4640999 Cartridge Valve	
18	4641248	1	Cartridge, Counterbalance Valve (Non Vented)	
18	70004186		Kit, Seal - 4641248 Cartridge Valve	
19	1001117991	1	Sensor, Cylinder Length	
20	1001118070	1	Cap, Retainer	
21	1001118084	1	Barrel	
21A	0961950	2	Bushing	
22	1001118086	1	Rod	
22A	0961950	2	Bushing	
100	1001139996	1	Kit, Seal (Includes Items 101-109)	
101	See Note	2	Ring, Wear (Note: Use p/n 1001139996)	
102	See Note	1	Ring, Back-Up (Note: Use p/n 1001139996)	
103	See Note	2	Ring, Lock (Note: Use p/n 1001139996)	
104	See Note	2	Ring, Back-Up (Note: Use p/n 1001139996)	
105	See Note	2	O-Ring (Note: Use p/n 1001139996)	
106	See Note	1	O-Ring (Note: Use p/n 1001139996)	
107	See Note	1	Seal (Note: Use p/n 1001139996)	
108	See Note	1	Wiper, Rod (Note: Use p/n 1001139996)	
109	See Note	2	Seal (Note: Use p/n 1001139996)	
200	1001119105	1	Kit, Sensor Magnet (Includes Items 201-203)	
201	See Note	NSS	Sleeve, Spacer (Note: Use p/n 1001119105)	
202	1001118066	1	Magnet, Sensor	
203	1001118069	1	Ring, Internal Retaining	

1) MACHINE IDENTIFICATION
Machines are identified by model and in some cases a combination of models, serial number (SN) or regional standard (i.e ANSI, CE,CSA). Components may also be identified by SN or manufacturer. common components that may be identified by these characteristics are engines and hydraulic components.

2) PARTS MANUAL ORGANIZATION
Product information in this manual is organized under section titles. Frame, Cylinder, Hydraulic and Electrical are a few examples. Each section is organized by figure and page number. The information within the Figure is then organized by item number, part number, description and corresponding illustration (s).

3) TABLE OF CONTENTS
A table of contents is found toward the beginning of the manual. Figure number, description and page number are provided for quick reference to the page containing the related information.

4) RECOMMENDED SPARE PARTS
The Recommended Spare Parts, located near the end of the manual, referance most frequently used maintenance parts.

5) PART NUMBER INDEX
A numerical index listing all part numbers and the corresponding page number(s) appears at the back of the manual.

GENERAL INFORMATION

6) NON-SERVICED PARTS
In some instances, it is necessary to display non-serviced parts, assemblies or installations. In the case of assemblies and installations there will be a Ref in the Qty column. In case of parts that are not available for service within assemblies or components, there will be a NSS (Not Sold Separately) or NLA (No Longer Available) listed in the Qty. column of the manual.

7) PARTS LIST ITEM NUMBERS
Numbers shown in the item# column correspond to numbers used in the associated illustration (s). Item numbers which are missing from the sequence in the parts list are not used on that page

8) INDENTED PARTS DESCRIPTION
An indented part description is included in the item under which it is indented.

9) ABB REVIATION AND SYMBOLS

AC ..... Alternating Current
ADE. ..... .Advanced Design Electronics
ANSI ..... .American National Standards Institute
AR.. ....As Required
ASSY ..... Assembly
AUX... ....Auxiliary
AWG ....American WireGauge
B/M.. ..... Bill of Material
CE.. ....European Conformity
CCW ..... .Counter Clockwise
cm. ..... Centimeter
CW ..... .Clockwise
CSA. ....Canadian Standards Association
CYL... ....Cylinder
DIA. ....Diameter
DC ..... .Direct Current
EMS ..... Emergency Stop
ENG ..... .Engine
FT(ft).. ....Feet
GA(Ga).. ..... .Gauge
HYD ..... Hydraulic
Hz.. ..... Hertz
ID.. ..... .Inside Diameter
in... ..... .inches
ISO ....International Organization for Standards
JIC ....Joint Industry Council
KG ..... .Kilogram
L.. ....Liter
LB ....Pounds
LCD .... Liquid Crystal Display
LED ..... Light Emitting Diodes
LH... ..... Left Hand
LSS ..... .Load Sensing System
M(m)... ..... Metric/Meter
MM (mm) ....Milimeter
mA. ..... Miliamps
NLA..... .....No Longer Available
NPT ..... National Pipe Threads
NSS ....Not Sold Separately
OD.. ....Outside Diameter
ORB ..... O-Ring Boss
ORFS ..... O-Ring Face Seal
OZ (oz). ..... .Ounces
PG ..... .Page
P/N. ....Part Number
qt. ....Quarts
QTY. ..... .Quantity
REF ..... .Reference
REV ....Revision Level
RH... ..... Right Hand
SAE..... ..... Society of Automotive Engineers
SN.. ....Serial Number
SPEC(S)..... ....Specifications
T/T. ....Turntable
UGM ....Universal Ground Module
V. ....Volts
W... .... Watts
#... .... Number

10) ILLUSTRATION REFERANCE LETTERS
When necessary, illustrations may contain referance letters that are intended to track information (i. e. hoses, harnesses) from one point to another or to track visual enlargement of components to show details that may be located in another area on the illustration.

Note: Due to continuous product improvements, JLG Industries, Inc. reserves the right to make specification changes without prior notification. Contact JLG Industries, Inc. for updated information.

TABLE OF CONTENTS

SECTION 1 - FRAME 15

FIGURE 1-1. AXLE INSTALLATION 16
FIGURE 1-2. STEER INSTALLATION WITHOUT TOW PACKAGE 18
FIGURE 1-3. STEER INSTALLATION WITH TOW PACKAGE 20
FIGURE 1-4. WHEEL DRIVE INSTALLATION (2WD) 22
FIGURE 1-5. WHEEL DRIVE INSTALLATION (4WD) 24
FIGURE 1-6. DRIVE HUB AND BRAKE ASSEMBLY - REAR 26
FIGURE 1-7. DRIVE HUB ASSEMBLY - FRONT 30
FIGURE 1-8. HUB - SPINDLE ASSEMBLY (2WD) 32
FIGURE 1-9. DRIVE MOTOR ASSEMBLY (2WD) 34
FIGURE 1-10. DRIVE MOTOR ASSEMBLY (4WD) 36
FIGURE 1-11. TRACTION VALVE ASSEMBLY (2WD) 38
FIGURE 1-12. TRACTION VALVE ASSEMBLY (4WD) 40
FIGURE 1-13. TIRE AND WHEEL INSTALLATION - 12 X 16.5 PNEUMATIC (AVAILABLE ON ANSI, ANSI EXPORT, CSA AND CHINA SPECS) 42
FIGURE 1-14. TIRE AND WHEEL INSTALLATION - 12 X 16.5 PNEUMATIC WITH TIRE SEALANT (AVAILABLE ON ANSI, ANSI EXPORT, CSA AND CHINA SPECS) 44
FIGURE 1-15. TIRE AND WHEEL INSTALLATION - 12 X 16.5 FOAM FILLED (AVAILABLE ON ALL SPECS) 46
FIGURE 1-16. TIRE AND WHEEL INSTALLATION - 12 X 16.5 FF NON-MARKING (AVAILABLE ON ALL SPECS) 48
FIGURE 1-17. TIRE AND WHEEL INSTALLATION - 14 X 17.5 PNEUMATIC (AVAILABLE ON ANSI, ANSI EXPORT, CSA AND CHINA SPECS) 50
FIGURE 1-18. TIRE AND WHEEL INSTALLATION - 14 X 17.5 FOAM FILLED (AVAILABLE ON ALL SPECS) 52
FIGURE 1-19. TIRE AND WHEEL INSTALLATION - 33 X 16LL X 16.1 PNEUMATIC TURF AND SAND (AVAILABLE ON ANSI, CSA, ANSI EXPORT AND CHINA SPECS) 54
FIGURE 1-20. FRAME SHIELD INSTALLATION - WITHOUT TOW BAR 56
FIGURE 1-21. FRAME SHIELD INSTALLATION - WITH TOW BAR 58
FIGURE 1-22. TOW BAR INSTALLATION 60
FIGURE 1-23. TOW BAR ASSEMBLY 62
FIGURE 1-24. LP TANK BRACKETS INSTALLATION 64

SECTION 2 - TURNTABLE 67

FIGURE 2-1. CONTROL VALVES INSTALLATION - 400S 68
FIGURE 2-2. CONTROL VALVES INSTALLATION - 460SJ 70
FIGURE 2-3. MAIN VALVE ASSEMBLY - 400S 72
FIGURE 2-4. MAIN VALVE ASSEMBLY - 460SJ 76
FIGURE 2-5. AXLE VALVE ASSEMBLY 80
FIGURE 2-6. SWING DRIVE INSTALLATION (SN 0300203771 through 0300264434, SN E300000100 through E300007431) 82
FIGURE 2-7. SWING HUB/MOTOR ASSEMBLY (SN 0300203771 through 0300264434, SN E300000100 through E300007431) 84
FIGURE 2-8. SWING DRIVE INSTALLATION (SN 0300264434 through 0300272360, SN E300007431 through E300007988) 88
FIGURE 2-9. SWING HUB/MOTOR ASSEMBLY (SN 0300264434 through 0300272360, SN E300007431 through E300007988) 90
FIGURE 2-10. TURNTABLE BEARING INSTALLATION 94
FIGURE 2-11. BEARING LUBE INSTALLATION 96
FIGURE 2-12. TURNTABLE LOCK INSTALLATION 98
FIGURE 2-13. ROTARY COUPLING INSTALLATION 100
FIGURE 2-14. TANKS INSTALLATION - DIESEL MACHINES (SN 0300203771 through 0300220609, SN E300000100 through E300004217, SN 1300007289 through 1300007393) 102
FIGURE 2-15. TANKS INSTALLATION - DIESEL MACHINES (SN 0300220610 through 0300272360, SN E300004218 through E300007988) 104
FIGURE 2-16. TANKS INSTALLATION - GAS MACHINES (SN 0300203771 through 0300220609) 106
FIGURE 2-17. TANKS INSTALLATION - GAS MACHINES (SN 0300220610 through 0300272360) 108
FIGURE 2-18. HYDRAULIC TANK ASSEMBLY 110
FIGURE 2-19. AUXILIARY PUMP AND BATTERY INSTALLATION 112
FIGURE 2-20. AUXILIARY PUMP AND BATTERY WITH DISCONNECT SWITCH INSTALLATION 114
FIGURE 2-21. AUXILIARY PUMP ASSEMBLY 116
FIGURE 2-22. ELECTRICAL INSTALLATION - 400S (ALL SPECS EXCEPT AUSTRALIAN SPEC) (SN 0300203771 through 0300250355) 118
FIGURE 2-23. ELECTRICAL INSTALLATION - 400S (ALL SPECS EXCEPT AUSTRALIAN SPEC) (SN 0300250356 through 0300272360) 120
FIGURE 2-24. ELECTRICAL INSTALLATION - 400S (ANSI AND CSA SPECS) (SN 0300203771 through 0300250355) 122
FIGURE 2-25. ELECTRICAL INSTALLATION - 400S (SN 0300250356 through 0300272360) 124
FIGURE 2-26. ELECTRICAL INSTALLATION - 460SJ (SN 0300203771 through 0300250355, SN E300000100 through E300006809) 126

TABLE OF CONTENTS

FIGURE 2-27. ELECTRICAL INSTALLATION - 460SJ (SN 0300250356 through 0300272360, SN E300006810 through E300007988) 128
FIGURE 2-28. ELECTRICAL INSTALLATION - 460SJ (ANSI AND CSA SPECS) (SN 0300203771 through 0300250355) 130
FIGURE 2-29. ELECTRICAL INSTALLATION - 460SJ (ANSI AND CSA SPECS) (SN 0300250356 through 0300272360) 132
FIGURE 2-30. ELECTRICAL PANEL ASSEMBLY 134
FIGURE 2-31. GROUND CONTROL ASSEMBLY - 400S (ALL SPECS EXCEPT AUSTRALIAN SPEC) (SN 0300203771 through 0300250355) 136
FIGURE 2-32. GROUND CONTROL ASSEMBLY - 400S (SN 0300250356 through 0300272360) 138
FIGURE 2-33. GROUND CONTROL ASSEMBLY - 400S (ANSI AND CSA SPECS) (SN 0300250356 through 0300272360) 140
FIGURE 2-34. GROUND CONTROL ASSEMBLY - 400S (ANSI AND CSA SPECS) 142
FIGURE 2-35. GROUND CONTROL ASSEMBLY - 460SJ (SN 0300203771 through 0300250355, SN E300000100 through E300006809) 144
FIGURE 2-36. GROUND CONTROL ASSEMBLY - 460SJ (SN 0300250356 through 0300272360, SN E300006810 through E300007988) 146
FIGURE 2-37. GROUND CONTROL ASSEMBLY - 460SJ (ANSI AND CSA SPECS) (SN 0300203771 through 0300250355) 148
FIGURE 2-38. GROUND CONTROL ASSEMBLY - 460SJ (ANSI AND CSA SPECS) (SN 0300250356 through 0300272360) 150
FIGURE 2-39. GROUND CONTROL DECAL AND KEYSWITCH INSTALLATION - 400S (ALL SPECS EXCEPT CE SPEC) 152
FIGURE 2-40. GROUND CONTROL DECAL AND KEYSWITCH INSTALLATION - 400S (CE SPEC) 154
FIGURE 2-41. GROUND CONTROL DECAL AND KEYSWITCH INSTALLATION - 460SJ (ALL SPECS EXCEPT CE SPEC) 156
FIGURE 2-42. GROUND CONTROL DECAL AND KEYSWITCH INSTALLATION - 460SJ (CE SPEC) 158
FIGURE 2-43. BEACON LIGHT INSTALLATION - AMBER 160
FIGURE 2-44. BEACON LIGHT INSTALLATION - BLUE (SN 0300203771 through 0300259126, SN E300000100 through E300007988) 162
FIGURE 2-45. BEACON LIGHT INSTALLATION - BLUE (SN 0300259127 through 0300272360) 164
FIGURE 2-46. BEACON LIGHT INSTALLATION - RED (SN 0300203771 through 0300259126, SN E300000100 through E300007988) 166
FIGURE 2-47. BEACON LIGHT INSTALLATION - RED (SN 0300259127 through 0300272360) 168
FIGURE 2-48. HOOD INSTALLATION - ABS (DEUTZ & GM ENGINES) 170
FIGURE 2-49. HOOD INSTALLATION - ABS (KUBOTA ENGINES) 174
FIGURE 2-50. HOOD INSTALLATION - ABS (KUBOTA ENGINES) (CE SPECS) 178
FIGURE 2-51. ABS HOOD ASSEMBLY - ENGINE SIDE 182
FIGURE 2-52. ABS HOOD ASSEMBLY - ENGINE SIDE (CE SPEC) 184
FIGURE 2-53. ABS HOOD ASSEMBLY - TANK SIDE 186
FIGURE 2-54. ABS HOOD ASSEMBLY - TANK SIDE (CE SPEC) 188
FIGURE 2-55. HOOD INSTALLATION - STEEL 190
FIGURE 2-56. STEEL HOOD ASSEMBLY - ENGINE SIDE (ANSI EXPORT SPECS) 194
FIGURE 2-57. STEEL HOOD ASSEMBLY - TANK SIDE (ANSI EXPORT SPECS) 196
FIGURE 2-58. SOUND REDUCTION INSTALLATION - KUBOTA ENGINE MACHINES WITH STEEL HOODS 198
FIGURE 2-59. TURNTABLE COVERS INSTALLATION 200

SECTION 3 - ENGINE 203

FIGURE 3-1. ENGINE INSTALLATION - DEUTZ D2011 ENGINE (WITHOUT ARCTIC PACKAGE) (ANSI EXPORT, AUSTRALIAN, CE AND CHINA SPECS) 204
FIGURE 3-2. ENGINE AND PUMP SUB-ASSEMBLY - DEUTZ D2011 (WITHOUT ARCTIC PACKAGE) (ANSI EXPORT, AUSTRALIAN AND CE SPECS) 210
FIGURE 3-3. ENGINE ASSEMBLY - DEUTZ D2011 ENGINE (WITHOUT ARCTIC PACKAGE) (ANSI EXPORT, AUSTRALIAN AND CE SPECS) 212
FIGURE 3-4. ENGINE INSTALLATION - DEUTZ D2011 ENGINE (WITH ARCTIC PACKAGE) (ANSI EXPORT AND CHINA SPECS) 216
FIGURE 3-5. ENGINE AND PUMP SUB-ASSEMBLY - DEUTZ D2011 (WITH ARCTIC PACKAGE) (ANSI EXPORT SPEC) 222
FIGURE 3-6. ENGINE ASSEMBLY - DEUTZ D2011 ENGINE (WITH ARCTIC PACKAGE) (ANSI EXPORT SPEC) 224
FIGURE 3-7. ENGINE INSTALLATION - DEUTZ D2011 ENGINE (STAGE V) (WITHOUT ARCTIC PACKAGE) (CE SPECS) 228
FIGURE 3-8. ENGINE AND PUMP SUB-ASSEMBLY - DEUTZ D2011 (STAGE V) (WITHOUT ARCTIC PACKAGE) (CE SPECS) 234
FIGURE 3-9. ENGINE ASSEMBLY - DEUTZ D2011 ENGINE (STAGE V) (WITHOUT ARCTIC PACKAGE) (CE SPECS) 236
FIGURE 3-10. ENGINE COMPONENTS - DEUTZ D2011 (STAGE V) 240
FIGURE 3-11. ENGINE COMPONENTS - DEUTZ D2011 244
FIGURE 3-12. ENGINE INSTALLATION - DEUTZ D2.9L4 ENGINE (WITHOUT ARCTIC PACKAGE) (ANSI, CSA AND ANSI EXPORT SPECS) 248
FIGURE 3-13. ENGINE AND PUMP SUB-ASSEMBLY - DEUTZ D2.9L4 (WITHOUT ARCTIC PACKAGE) (ANSI, CSA AND ANSI EXPORT SPECS) 254
FIGURE 3-14. ENGINE ASSEMBLY - DEUTZ D2.9L4 ENGINE (WITHOUT ARCTIC PACKAGE) (ANSI, CSA AND ANSI EXPORT SPECS) 256
FIGURE 3-15. ENGINE INSTALLATION - DEUTZ D2.9L4 ENGINE (WITH ARCTIC PACKAGE) (ANSI AND CSA SPECS) 262
FIGURE 3-16. ENGINE AND PUMP SUB-ASSEMBLY - DEUTZ D2.9L4 (WITH ARCTIC PACKAGE) (ANSI AND CSA SPECS) 268

FIGURE 3-17. ENGINE ASSEMBLY - DEUTZ D2.9L4 ENGINE (WITH ARCTIC PACKAGE) (ANSI AND CSA SPECS) 270
FIGURE 3-18. BREATHER HEATER INSTALLATION - DEUTZ D2.9L4 ENGINE WITH ARCTIC PACKAGE 276
FIGURE 3-19. BRACKET ASSEMBLY - FUEL PUMP AND FILTER (DEUTZ D2.9L4 ENGINE) 278
FIGURE 3-20. ENGINE COMPONENTS - DEUTZ D2.9L4 ENGINE 280
FIGURE 3-21. ENGINE INSTALLATION - GM ENGINE (WITHOUT ARCTIC PACKAGE) (SN 0300203771 through 0300222291) 284
FIGURE 3-22. ENGINE INSTALLATION - GM ENGINE (WITHOUT ARCTIC PACKAGE) (SN 0300222292 through 0300272360) 290
FIGURE 3-23. ENGINE AND PUMP SUB-ASSEMBLY - GM ENGINE (WITHOUT ARCTIC PACKAGE) (SN 0300203771 through 0300222291) 296
FIGURE 3-24. ENGINE AND PUMP SUB-ASSEMBLY - GM ENGINE (WITHOUT ARCTIC PACKAGE) (SN 0300222292 through 0300272360) 298
FIGURE 3-25. ENGINE ASSEMBLY - GM ENGINE (WITHOUT ARCTIC PACKAGE) (SN 0300203771 through 0300222291) 300
FIGURE 3-26. ENGINE ASSEMBLY - GM ENGINE (WITHOUT ARCTIC PACKAGE) (SN 0300222292 through 0300272360) 304
FIGURE 3-27. ENGINE INSTALLATION - GM ENGINE (WITH ARCTIC PACKAGE) (SN 0300203771 through 0300222291) 308
FIGURE 3-28. ENGINE INSTALLATION - GM ENGINE (WITH ARCTIC PACKAGE) (SN 0300222292 through 0300272360) 314
FIGURE 3-29. ENGINE AND PUMP SUB-ASSEMBLY - GM ENGINE (WITH ARCTIC PACKAGE) (SN 0300203771 through 0300222291) 320
FIGURE 3-30. ENGINE AND PUMP SUB-ASSEMBLY - GM ENGINE (WITH ARCTIC PACKAGE) (SN 0300222292 through 0300272360) 322
FIGURE 3-31. ENGINE ASSEMBLY - GM ENGINE (WITH ARCTIC PACKAGE) (SN 0300203771 through 0300222291) 324
FIGURE 3-32. ENGINE ASSEMBLY - GM ENGINE (WITH ARCTIC PACKAGE) (SN 0300222292 through 0300272360) 328
FIGURE 3-33. FUEL SYSTEM MOUNTING - GM ENGINES 332
FIGURE 3-34. ENGINE INSTALLATION - KUBOTA ENGINE (WITHOUT ARCTIC PACKAGE) (SN 0300203771 through 0300241777) 334
FIGURE 3-35. ENGINE INSTALLATION - KUBOTA ENGINE (WITHOUT ARCTIC PACKAGE) (SN 0300241778 through 0300272360) 340
FIGURE 3-36. ENGINE AND PUMP SUB-ASSEMBLY - KUBOTA ENGINE (WITHOUT ARCTIC PACKAGE) (SN 0300203771 through 0300241777) 346
FIGURE 3-37. ENGINE AND PUMP SUB-ASSEMBLY - KUBOTA ENGINE (WITHOUT ARCTIC PACKAGE) (SN 0300241778 through 0300272360) 348
FIGURE 3-38. ENGINE ASSEMBLY - KUBOTA ENGINE (WITHOUT ARCTIC PACKAGE) (SN 0300203771 through 0300241777) 350
FIGURE 3-39. ENGINE ASSEMBLY - KUBOTA ENGINE (WITHOUT ARCTIC PACKAGE) (SN 0300241778 through 0300272360) 356
FIGURE 3-40. PUMP COUPLING KIT - KUBOTA ENGINE 362
FIGURE 3-41. ENGINE INSTALLATION - KUBOTA ENGINE (WITH ARCTIC PACKAGE) (SN 0300203771 through 0300241777) 364
FIGURE 3-42. ENGINE INSTALLATION - KUBOTA ENGINE (WITH ARCTIC PACKAGE) (SN 0300241778 through 0300272360) 370
FIGURE 3-43. ENGINE AND PUMP SUB-ASSEMBLY - KUBOTA ENGINE (WITH ARCTIC PACKAGE) (SN 0300203771 through 0300241777) 376
FIGURE 3-44. ENGINE AND PUMP SUB-ASSEMBLY - KUBOTA ENGINE (WITH ARCTIC PACKAGE) (SN 0300241778 through 0300272360) 378
FIGURE 3-45. ENGINE ASSEMBLY - KUBOTA ENGINE (WITH ARCTIC PACKAGE) (SN 0300203771 through 0300241777) 380
FIGURE 3-46. ENGINE ASSEMBLY - KUBOTA ENGINE (WITH ARCTIC PACKAGE) (SN 0300241778 through 0300272360) 386
FIGURE 3-47. ENGINE COMPONENTS - KUBOTA 392
FIGURE 3-48. PUMP COUPLING KIT (KUBOTA ENGINES) 396
FIGURE 3-49. GEAR PUMP ASSEMBLY 398
FIGURE 3-50. PISTON PUMP ASSEMBLY 400
FIGURE 3-51. SPARK ARRESTOR INSTALLATION - DEUTZ D2.9L4 ENGINE 404
FIGURE 3-52. CATALYTIC SPARK ARRESTOR INSTALLATION - DEUTZ D2011 ENGINE 406
FIGURE 3-53. SPARK ARRESTOR INSTALLATION - DEUTZ D2011 ENGINE 408
FIGURE 3-54. SPARK ARRESTOR INSTALLATION - KUBOTA ENGINE 410
FIGURE 3-55. ENGINE BAFFLE INSTALLATION - ABS HOODS (DEUTZ & GM ENGINES) 412
FIGURE 3-56. ENGINE BAFFLE INSTALLATION - ABS HOODS (KUBOTA ENGINES) 414
FIGURE 3-57. ENGINE BAFFLE INSTALLATION - STEEL HOODS 416
FIGURE 3-58. ENGINE TRAY JACK (SN 0300203771 through 0300272360, SN E300000100 through E300007214) 418
FIGURE 3-59. ENGINE TRAY JACK (SN E300007215 through E300007988) 420
FIGURE 3-60. GENERATOR INSTALLATION - 2500W/60HZ (DEUTZ D2011 ENGINE) 422
FIGURE 3-61. GENERATOR INSTALLATION - 2500W/60HZ (DEUTZ D2.9L4 ENGINE) 426
FIGURE 3-62. GENERATOR INSTALLATION - 2500W/60HZ (GM ENGINE) 430
FIGURE 3-63. GENERATOR INSTALLATION - 2500W/60HZ (KUBOTA ENGINE) 434
FIGURE 3-64. GENERATOR INSTALLATION - 4000W/50HZ (DEUTZ D2011 ENGINE) 438
FIGURE 3-65. GENERATOR INSTALLATION - 4000W/60HZ (DEUTZ D2011 ENGINE) 442
FIGURE 3-66. GENERATOR INSTALLATION - 4000W/60HZ (DEUTZ D2.9L4 ENGINE) 446
FIGURE 3-67. GENERATOR INSTALLATION - 4000W/60HZ (GM ENGINE) 450

TABLE OF CONTENTS

FIGURE 3-68. GENERATOR INSTALLATION - 7500W/50HZ (DEUTZ D2011 ENGINE) 454
FIGURE 3-69. GENERATOR INSTALLATION - 7500W/60HZ (DEUTZ D2011 ENGINE) 458
FIGURE 3-70. GENERATOR INSTALLATION - 7500W/60HZ (DEUTZ D2.9L4 ENGINE) 462
FIGURE 3-71. GENERATOR INSTALLATION - 7500W/60HZ (GM ENGINE) 466
FIGURE 3-72. GENERATOR INSTALLATION - 7500W/60HZ (KUBOTA ENGINE) 470

SECTION 4 - BOOM 475

FIGURE 4-1. BOOM AND CYLINDERS INSTALLATION - 400S (EUROPEAN BUILT) 476
FIGURE 4-2. BOOM AND CYLINDERS INSTALLATION - 400S (US BUILT) (SN 0300255280 through 0300272360) 478
FIGURE 4-3. BOOM AND CYLINDERS INSTALLATION - 460SJ (SN 0300203771 through 0300272360, SN E300000100 through E300004333) 480
FIGURE 4-4. BOOM AND CYLINDERS INSTALLATION - 460SJ (SN E300004334 through E300007988, SN 1300007289 through 1300007393) 482
FIGURE 4-5. MAIN BOOM ASSEMBLY - 400S 484
FIGURE 4-6. MAIN BOOM ASSEMBLY - 460SJ (SN 0300203771 through 0300272360, SN E300000100 through E300004333) 488
FIGURE 4-7. MAIN BOOM ASSEMBLY - 460SJ (SN E300004334 through E300007988, SN 1300007289 through 1300007393) 492
FIGURE 4-8. MAIN BOOM ASSEMBLY - 400S (SN 0300255280 through 0300272360) 496
FIGURE 4-9. JIB BOOM ASSEMBLY (SN 0300203771 through 0300261548, SN E300000100 through E300004333) 498
FIGURE 4-10. JIB BOOM ASSEMBLY (SN 0300261549 through 0300272360) 500
FIGURE 4-11. JIB BOOM ASSEMBLY - 460SJ (SN E300004334 through E300007170, SN 1300007289 through 1300007393) 502
FIGURE 4-12. JIB BOOM ASSEMBLY - 460SJ (SN E300007171 through E300007988) 504
FIGURE 4-13. ROTATOR ASSEMBLY - 400S (SN 0300203771 through 03002444182, SN E300000100 through E300005673, SN 1300007289 through 1300007393) 506
FIGURE 4-14. ROTATOR ASSEMBLY - 400S (SN 0300244183 through 0300272360, SN E300005674 through E300007988) 508
FIGURE 4-15. ROTATOR ASSEMBLY - 460SJ 510
FIGURE 4-16. POWER TRACK INSTALLATION (SN 0300203771 through 0300272360, SN E300000100 through E300003862) 512
FIGURE 4-17. POWER TRACK INSTALLATION (SN E300003862 through E300007988, SN 1300007289 through 1300007393) 514
FIGURE 4-18. CAPACITY SWITCH INSTALLATION 516
FIGURE 4-19. TRANSPORT SWITCHES INSTALLATION 518
FIGURE 4-20. PLATFORM SUPPORT INSTALLATION - WITHOUT LSS 520
FIGURE 4-21. PLATFORM SUPPORT INSTALLATION WITH 4 CELL LSS 522
FIGURE 4-22. PLATFORM SUPPORT INSTALLATION - WITH 1 CELL LSS 524
FIGURE 4-23. CABLES AND CLAMPS INSTALLATION - 400S (ANSI, ANSI EXPORT, CSA AND CHINA SPECS) 526
FIGURE 4-24. CABLES AND CLAMPS INSTALLATION - 400S (CE SPECS) (SN 0300203771 through 0300212082) 528
FIGURE 4-25. CABLES AND CLAMPS INSTALLATION - 400S (CE SPECS) (SN 0300212083 through 0300272360, SN E300000100 through E300007988, SN 1300007289 through 1300007393) 530
FIGURE 4-26. CABLES AND CLAMPS INSTALLATION - 460SJ (ANSI, ANSI EXPORT AND CSA SPECS) (SN 0300203771 through 0300212083) 532
FIGURE 4-27. CABLES AND CLAMPS INSTALLATION - 460SJ (CE SPECS) (SN 0300203771 through 0300212083) 534
FIGURE 4-28. CABLES AND CLAMPS INSTALLATION - 460SJ (ALL SPECS) (SN 0300212083 through 0300272360, SN E300000100 through E300007988, SN 1300007289 through 1300007393) 536

SECTION 5 - PLATFORM 539

FIGURE 5-1. PLATFORM ASSEMBLY - 30IN X 5FT (76.2CM X 1.52M) WITH SWING GATE (USA BUILT MACHINES) 540
FIGURE 5-2. PLATFORM ASSEMBLY - 36IN X 6FT (91.5CM X 1.83M) WITH SWING GATE (USA BUILT MACHINES) 542
FIGURE 5-3. PLATFORM ASSEMBLY - 36IN X 8FT (91.5CM X 2.44M) WITH SWING GATE (USA BUILT MACHINES) 544
FIGURE 5-4. PLATFORM ASSEMBLY - 30IN X 5FT (76.2CM X 1.52M) WITH DROP BAR (USA BUILT MACHINES) 546
FIGURE 5-5. PLATFORM ASSEMBLY - 36IN X 6FT (91.5CM X 1.83M) WITH DROP BAR (USA BUILT MACHINES) 548
FIGURE 5-6. PLATFORM ASSEMBLY - 36IN X 8FT (91.5CM X 2.44M) WITH DROP BAR (USA BUILT MACHINES) 550
FIGURE 5-7. PLATFORM ASSEMBLY - 36IN X 6FT (91.5CM X 1.83M) WITH FALL ARREST (ANSI, ANSI EXPORT AND CHINA SPECS) (USA BUILT MACHINES) 552
FIGURE 5-8. PLATFORM ASSEMBLY - 30IN X 5FT (76CM X 1.52M) WITH SWING GATE (ROMANIAN BUILT MACHINES) .554
FIGURE 5-9. PLATFORM ASSEMBLY - 36IN X 6FT (92CM X 1.83M) WITH SWING GATE (ROMANIAN BUILT MACHINES) .556
FIGURE 5-10. PLATFORM ASSEMBLY - 36IN X 8FT (91.5CM X 2.44M) WITH SWING GATE (ROMANIAN BUILT MACHINES) 558
FIGURE 5-11. PLATFORM ASSEMBLY - 36IN X 8FT (91.5CM X 2.44M) WITH DROP BAR (ROMANIAN BUILT MACHINES) .560
FIGURE 5-12. PLATFORM ASSEMBLY - 30IN X 5FT (76CM X 1.52M) WITH DROP BAR (ROMANIAN BUILT MACHINES) 562
FIGURE 5-13. PLATFORM ASSEMBLY - 36IN X 6FT (91.5CM X 1.83M) WITH DROP BAR (ROMANIAN BUILT MACHINES) .564
FIGURE 5-14. PLATFORM ASSEMBLY - 36IN X 6FT (91.5CM X 1.83M) TRI-ENTRY WITH GATE 566
FIGURE 5-15. PLATFORM ASSEMBLY - 36IN X 6FT (91.5CM X 1.83M) TRI-ENTRY WITH DROPBAR 568

FIGURE 5-16. PLATFORM ASSEMBLY - 36IN X 8FT (91.5CM X 2.44M) WITH TRI-ENTRY (1 GATE/2 DROP BARS) 570
FIGURE 5-17. PLATFORM ASSEMBLY - 36IN X 8FT (91.5CM X 2.44M) WITH TRI-ENTRY (3 DROP BARS) 572
FIGURE 5-18. PLATFORM ASSEMBLY - 30IN X 3FT (76CM X .91M) - DROP BAR ENTRY 574
FIGURE 5-19. CONSOLE BOX INSTALLATION - WITHOUT SKYGUARD 576
FIGURE 5-20. CONSOLE BOX INSTALLATION - WITH SKYGUARD (SN 0300203771 through 0300259126, SN E300000100 through E300007988) 578
FIGURE 5-21. CONSOLE BOX INSTALLATION - WITH SKYGUARD (SN 0300259127 through 0300272360) 580
FIGURE 5-22. CONSOLE BOX ASSEMBLY - WITHOUT SKYGUARD (SN 0300203771 through 0300220006) 582
FIGURE 5-23. CONSOLE BOX ASSEMBLY - WITHOUT SKYGUARD (SN 0300220007 through 0300272360, SN E300000100 through E300007988, SN 1300007289 through 1300007393) 586
FIGURE 5-24. CONSOLE BOX ASSEMBLY - WITH SKYGUARD (SN 0300203771 through 0300220006) 590
FIGURE 5-25. CONSOLE BOX ASSEMBLY - WITH SKYGUARD (SN 0300220007 through 0300259126, SN E300000100 through E300007988, SN 1300007289 through 1300007393) 594
FIGURE 5-26. CONSOLE BOX ASSEMBLY - WITH SKYGUARD (SN 0300259127 through 0300272360) 598
FIGURE 5-27. CONTROLLER ASSEMBLY - DRIVE AND STEER 602
FIGURE 5-28. CONTROLLER ASSEMBLY - LIFT AND SWING 604
FIGURE 5-29. FOOTSWITCH ASSEMBLY 606
FIGURE 5-30. LIGHT PANEL INSTALLATION - 400S (ANSI, ANSI EXPORT AND CSA SPECS) 608
FIGURE 5-31. LIGHT PANEL INSTALLATION - 400S (CE SPECS) 610
FIGURE 5-32. LIGHT PANEL INSTALLATION - 460SJ 612
FIGURE 5-33. TRAY INSTALLATION 614
FIGURE 5-34. SOFT TOUCH INSTALLATION - 36IN X 8FT (91.5CM X 2.44M) PLATFORM (OPTIONAL) 616
FIGURE 5-35. SKYGUARD SYSTEM INSTALLATION (SN 0300203771 through 0300259126, SN E300000100 through E300007988) 618
FIGURE 5-36. SKYGUARD BAR INSTALLATION (SN 0300259127 through 0300272360) 620
FIGURE 5-37. SKYEYE INSTALLATION 622
FIGURE 5-38. SKYLINE INSTALLATION 624
FIGURE 5-39. CROSS RAIL INSTALLATION 626
FIGURE 5-40. SKYGLAZIER INSTALLATION 628
FIGURE 5-41. SKYWELDER INSTALLATION (50HZ) 632
FIGURE 5-42. SKYWELDER INSTALLATION (60HZ) 634
FIGURE 5-43. SKYWELDER PREP PACKAGE (60HZ) 636
FIGURE 5-44. WELDER ASSEMBLY 638

SECTION 6 - CYLINDER 641

FIGURE 6-1. AXLE LOCKOUT CYLINDER ASSEMBLY 642
FIGURE 6-2. LEVEL (PLATFORM SLAVE) CYLINDER ASSEMBLY 644
FIGURE 6-3. LIFT CYLINDER ASSEMBLY - MAIN BOOM (SN 0300203771 through 0300204034) 646
FIGURE 6-4. LIFT CYLINDER ASSEMBLY - MAIN BOOM (SN 0300204035 through 0300226846, SN E300000100 through E3000004457) 648
FIGURE 6-5. LIFT CYLINDER ASSEMBLY - MAIN BOOM (SN 0300226847 through 0300243703, SN E3000004458 through E300005607) 650
FIGURE 6-6. LIFT CYLINDER ASSEMBLY - MAIN BOOM (SN 0300243704 through 0300272360, SN E300005608 through E300007988) 652
FIGURE 6-7. LIFT CYLINDER ASSEMBLY - JIB (460SJ ONLY) (SN 0300203771 through 0300244835, SN E300000100 through E300005748, SN 1300007289 through 1300007393) 654
FIGURE 6-8. LIFT CYLINDER ASSEMBLY - JIB (460SJ ONLY) (SN 0300244835 through 0300244838, SN E300005748 through E300007988) 656
FIGURE 6-9. LIFT CYLINDER ASSEMBLY - JIB (460SJ ONLY) (SN 0300244839 through 0300272360, SN E300006010 through E300007988) 658
FIGURE 6-10. MASTER CYLINDER ASSEMBLY 660
FIGURE 6-11. STEER CYLINDER ASSEMBLY 662
FIGURE 6-12. TELESCOPE CYLINDER ASSEMBLY (SN 0300203771 through 0300244182, SN E300000100 through E300005673, SN 1300007289 through 1300007393) 664
FIGURE 6-13. TELESCOPE CYLINDER ASSEMBLY (SN 0300244183 through 0300255279, SN E300005674 through E300006467) 666
FIGURE 6-14. TELESCOPE CYLINDER ASSEMBLY (SN 0300255280 through 0300272360, SN E300006468 through E300007988) 668

SECTION 7 - HYDRAULIC 671

FIGURE 7-1. 400S 2WD HYDRAULIC SYSTEM INSTALLATION (SN 0300203771 through 0300220609) 672
FIGURE 7-2. 400S 2WD HYDRAULIC SYSTEM INSTALLATION (SN 0300220610 through 0300272360) 680
FIGURE 7-3. 400S 4WD HYDRAULIC SYSTEM INSTALLATION (WITHOUT ARCTIC PACKAGE) (SN 0300203771 through 0300214505) 688

TABLE OF CONTENTS

FIGURE 7-4. 400S 4WD HYDRAULIC SYSTEM INSTALLATION (WITH ARCTIC PACKAGE) (SN 0300203771 through 0300214505)....696
FIGURE 7-5. 400S 4WD HYDRAULIC SYSTEM INSTALLATION (ALL MACHINES) (SN 0300214506 through 0300220609)....704
FIGURE 7-6. 400S 4WD HYDRAULIC SYSTEM INSTALLATION (ALL MACHINES) (SN 0300220610 through 0300272360, SN E300000100 through E300007988, SN 1300007289 through 1300007393)....712
FIGURE 7-7. 460SJ 2WD HYDRAULIC SYSTEM INSTALLATION (SN 0300203771 through 0300220609)....722
FIGURE 7-8. 460SJ 2WD HYDRAULIC SYSTEM INSTALLATION (SN 0300220610 through 0300272360)....730
FIGURE 7-9. 460SJ 4WD HYDRAULIC SYSTEM INSTALLATION (WITHOUT ARCTIC PACKAGE) (SN 0300203771 through 0300214505)....738
FIGURE 7-10. 460SJ 4WD HYDRAULIC SYSTEM INSTALLATION (WITH ARCTIC PACKAGE) (SN 0300203771 through 0300214505)....746
FIGURE 7-11. 460SJ 4WD HYDRAULIC SYSTEM INSTALLATION (ALL MACHINES) (SN 0300214506 through 0300220609)....754
FIGURE 7-12. 460SJ 4WD HYDRAULIC SYSTEM INSTALLATION (ALL MACHINES) (SN 0300220610 through 0300272360, SN E300000100 through E300007988, SN 1300007289 through 1300007393)....762
FIGURE 7-13. HYDRAULIC DIAGRAM LIST....772

SECTION 8 - ELECTRICAL....773

FIGURE 8-1. ELECTRICAL DIAGRAM LIST....774
FIGURE 8-2. AC BOX AT PLATFORM INSTALLATION - 110V (ANSI, ANSI EXPORT, CSA AND CHINA SPECS)....776
FIGURE 8-3. AC BOX AT PLATFORM INSTALLATION - 220V (ANSI, ANSI EXPORT AND CSA SPECS) (SN 0300203771 through 0300220609)....778
FIGURE 8-4. AC BOX AT PLATFORM - 110V IEC YELLOW (CE SPEC)....780
FIGURE 8-5. AC BOX AT PLATFORM - 220V IEC BLUE (CE SPEC)....782
FIGURE 8-6. AC BOX AT PLATFORM - 220V CEE7 70MM X 70MM POST GROUND (CE SPEC) (SN 0300203771 through 0300208696)....784
FIGURE 8-7. AC BOX AT PLATFORM - 220V CEE7 2IN X 4IN POST GROUND (CE SPEC)....786
FIGURE 8-8. AC BOX AT PLATFORM - 220V CEE7 70MM X 70MM SIDE GROUND (CE SPEC) (SN 0300203771 through 0300208696)....788
FIGURE 8-9. AC BOX AT PLATFORM - 220V CEE7 2IN X 4IN SIDE GROUND (CE SPEC)....790
FIGURE 8-10. AC BOX AT PLATFORM - 220V AFSINT107 (CE SPEC)....792
FIGURE 8-11. AC BOX AT PLATFORM INSTALLATION - 220V CUSTOMER SUPPLIED COMPONENTS (ANSI EXPORT, AUSTRALIAN, CE AND CHINA SPECS)....794
FIGURE 8-12. AC CABLE INSTALLATION - WITH THREE BREAKERS (CE SPECS)....796
FIGURE 8-13. BATTERY DISCONNECT SWITCH....798
FIGURE 8-14. BEACON HARNESS (BLUE BEACON LIGHT ONLY)....800
FIGURE 8-15. BEACON EXTENSION HARNESS (BLUE BEACON LIGHT ONLY)....802
FIGURE 8-16. BOOM HARNESS - 400S....804
FIGURE 8-17. BOOM HARNESS - 460SJ....806
FIGURE 8-18. BOOM CAPACITY PROXIMITY SWITCH HARNESS (400S ONLY)....808
FIGURE 8-19. BOOM TELE IN PROXIMITY SWITCH HARNESS....810
FIGURE 8-20. BREAKER BOX INSTALLATION - 110/220V 10AMP BREAKER (CE SPEC) (SN 0300203771 through 0300220609)....812
FIGURE 8-21. BREAKER BOX INSTALLATION - 110/220V 16AMP BREAKER (CE SPEC) (SN 0300203771 through 0300239571, SN E300000100 through E300005185, SN 1300007289 through 1300007393)....814
FIGURE 8-22. BREAKER BOX INSTALLATION - 110/220V 16AMP BREAKER (CE SPEC) (SN 0300239572 through 0300272360, SN E300005186 through E300007988)....816
FIGURE 8-23. BREAKER BOX KIT - 110/220V 10AMP BREAKER (CE SPEC)....818
FIGURE 8-24. BREAKER BOX KIT - 110/220V 16AMP BREAKER (CE SPEC)....820
FIGURE 8-25. ENGINE HARNESS - DEUTZ D2011....822
FIGURE 8-26. ENGINE HARNESS - DEUTZ D2.9L4....824
FIGURE 8-27. ENGINE HARNESS - GM....828
FIGURE 8-28. ENGINE HARNESS - KUBOTA....830
FIGURE 8-29. FUEL HARNESS - DEUTZ D2.9L4 ENGINE....832
FIGURE 8-30. FUEL HARNESS - KUBOTA ENGINE....834
FIGURE 8-31. GENERATOR HARNESS - 2500W....836
FIGURE 8-32. GENERATOR HARNESS - 4000W....838
FIGURE 8-33. GROUND CONTROL BOX HARNESS....840
FIGURE 8-34. INTERFACE HARNESS - WITH 1 CELL LSS....842
FIGURE 8-35. LSS HARNESS....844
FIGURE 8-36. PLATFORM CONSOLE BOX HARNESS (SN 0300203771 through 0300259126, SN E300000100 through E300007988, SN 1300007289 through 1300007393)....846
FIGURE 8-37. PLATFORM CONSOLE BOX HARNESS (SN 0300259127 through 0300272360)....848
FIGURE 8-38. RECEPTACLE BOX KIT - 110V IEC YELLOW (CE SPEC)....850
FIGURE 8-39. RECEPTACLE BOX KIT - 220V IEC BLUE (CE SPEC)....852

FIGURE 8-40. RECEPTACLE BOX KIT - 220V CEE7 POST GROUND 70MM X 70MM (CE SPEC) (SN 0300203771 through 0300208696) 854
FIGURE 8-41. RECEPTACLE BOX KIT - 220V CEE7 POST GROUND 2IN X 4IN (CE SPEC) 856
FIGURE 8-42. RECEPTACLE BOX KIT - 220V CEE7 SIDE GROUND 70MM X 70MM (CE SPEC) (SN 0300203771 through 0300208696) 858
FIGURE 8-43. RECEPTACLE BOX KIT - 220V CEE7 SIDE GROUND 2IN X 4IN (CE SPEC) 860
FIGURE 8-44. RECEPTACLE BOX KIT - 220V AFSINT 107 (CE SPEC) 862
FIGURE 8-45. SKYGUARD HARNESS 864
FIGURE 8-46. TURNTABLE HARNESS 866
FIGURE 8-47. VALVE HARNESS - MAIN VALVE 870
FIGURE 8-48. SKYLINE HARNESS 872
FIGURE 8-49. SKYEYE INTERMEDIATE HARNESS 874
FIGURE 8-50. SKYEYE RECEIVER HARNESS 876
FIGURE 8-51. SKYEYE EMITTER HARNESS 878

SECTION 9 - DECALS 881

FIGURE 9-1. DECAL INSTALLATION - ANSI, ANSI EXPORT AND CHINA SPECS - ENGLISH (400S WITH DEUTZ AND GM ENGINES) 882
FIGURE 9-2. DECAL INSTALLATION - ANSI SPECS - ENGLISH (400S WITH KUBOTA ENGINES) 884
FIGURE 9-3. DECAL INSTALLATION - ANSI, ANSI EXPORT AND CHINA SPECS - ENGLISH (460SJ WITH DEUTZ AND GM ENGINES) 886
FIGURE 9-4. DECAL INSTALLATION - ANSI SPECS - ENGLISH (460SJ WITH KUBOTA ENGINES) 888
FIGURE 9-5. DECAL INSTALLATION - AUSTRALIAN SPEC (460SJ) 890
FIGURE 9-6. DECAL INSTALLATION - CE SPEC (400S) 892
FIGURE 9-7. DECAL INSTALLATION - CE SPEC (460SJ) 894
FIGURE 9-8. DECAL INSTALLATION - BRAZIL SPEC (DUAL LANGUAGE - PORTUGUESE/SPANISH) (400S) 896
FIGURE 9-9. DECAL INSTALLATION - BRAZIL SPEC (DUAL LANGUAGE - PORTUGUESE/SPANISH) (460SJ) 898
FIGURE 9-10. DECAL INSTALLATION - CHINESE SPEC (DUAL LANGUAGE - ENGLISH/CHINESE) (400S) 900
FIGURE 9-11. DECAL INSTALLATION - CHINESE SPEC (DUAL LANGUAGE - ENGLISH/CHINESE) (460SJ) 902
FIGURE 9-12. DECAL INSTALLATION - CSA SPEC (DUAL LANGUAGE - ENGLISH/FRENCH) (400S WITH DEUTZ AND GM ENGINES) 904
FIGURE 9-13. DECAL INSTALLATION - CSA SPECS (ENGLISH) (400S WITH KUBOTA ENGINES) 906
FIGURE 9-14. DECAL INSTALLATION - CSA SPEC (DUAL LANGUAGE - ENGLISH/FRENCH) (460SJ WITH DEUTZ AND GM ENGINES) 908
FIGURE 9-15. DECAL INSTALLATION - CSA SPEC (DUAL LANGUAGE - ENGLISH/FRENCH) (460SJ WITH KUBOTA ENGINES) 910
FIGURE 9-16. DECAL INSTALLATION - JAPANESE SPEC (DUAL LANGUAGE - ENGLISH/JAPANESE) (400S) 912
FIGURE 9-17. DECAL INSTALLATION - JAPANESE SPEC (DUAL LANGUAGE - ENGLISH/JAPANESE) (460SJ) 914
FIGURE 9-18. DECAL INSTALLATION - KOREAN SPEC (DUAL LANGUAGE - ENGLISH/KOREAN) (400S) 916
FIGURE 9-19. DECAL INSTALLATION - KOREAN SPEC (DUAL LANGUAGE - ENGLISH/KOREAN) (460SJ) 918
FIGURE 9-20. DECAL INSTALLATION - LATIN AMERICAN SPEC (DUAL LANGUAGE - ENGLISH/SPANISH) (400S) 920
FIGURE 9-21. DECAL INSTALLATION - LATIN AMERICAN SPEC (DUAL LANGUAGE - ENGLISH/SPANISH) (460SJ) 922
FIGURE 9-22. DECAL INSTALLATION - OPTIONS 924

SECTION 10 - RECOMMENDED SERVICE PARTS STOCK 927

FIGURE 10-1. RECOMMENDED SERVICE PARTS STOCK 928

SECTION 11 - SPECIAL OPTIONS 931

FIGURE 11-1. SPECIAL OPTIONS 932

PART NUMBER INDEX 937

SECTION 1 - FRAME

FIGURE 1-1. AXLE INSTALLATION

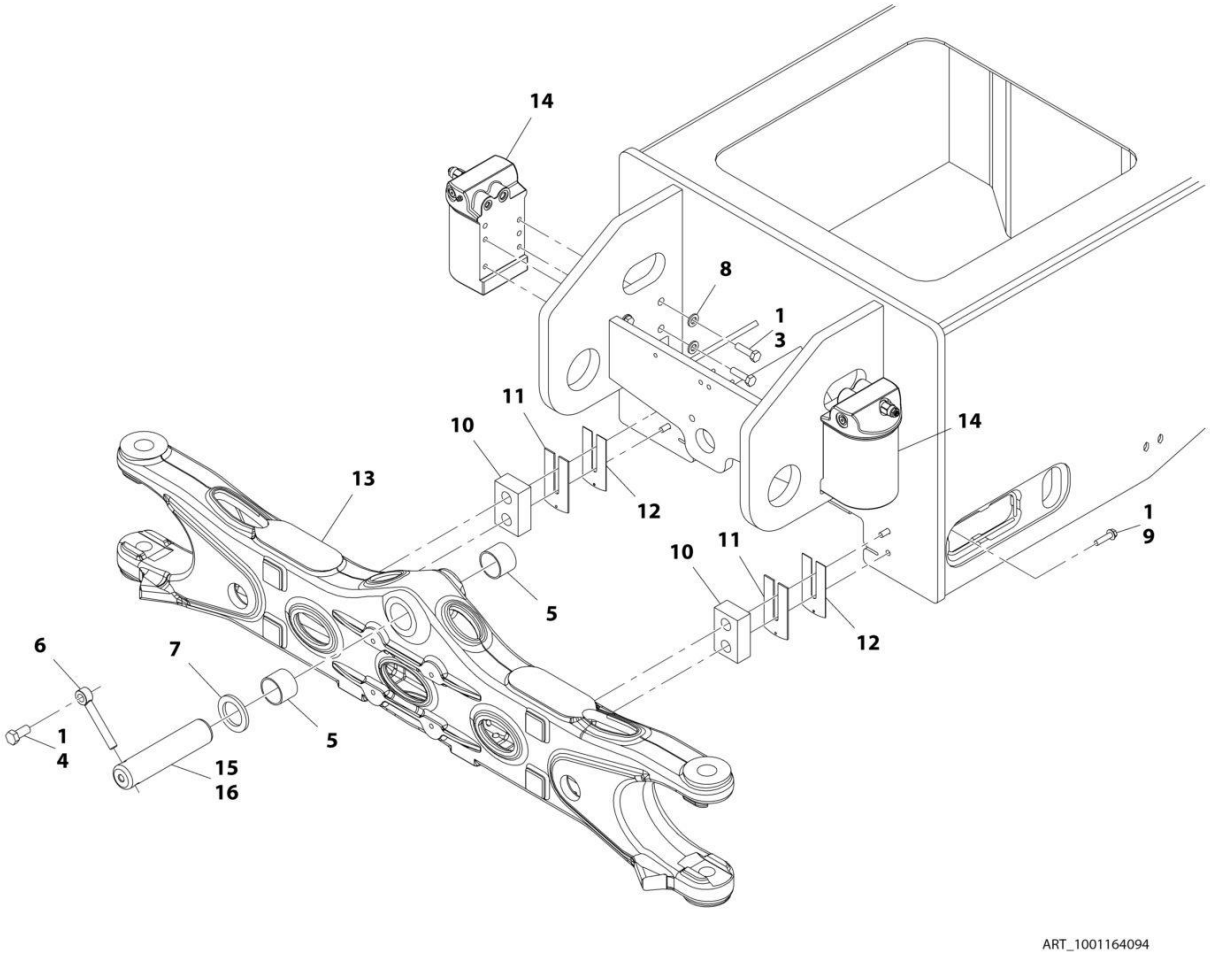

FIGURE 1-1. AXLE INSTALLATION

ITEM	PART NUMBER	QTY	DESCRIPTION	REV
	1001164094	Ref	AXLE INSTALLATION	C
1	0100011	AR	Compound, Locking	
3	0701217	8	Bolt, M12 x 45	
4	0761615	1	Bolt, M16 x 35	
5	0961950	2	Bearing	
6	3841258	1	Keeper, Pin	
7	4740158	1	Washer	
8	5241200	8	Washer, M12	
9	5251016	4	Bolt, M10 x 40	
10	1001166563	2	Pad, Wear	
11	1001150324	2	Shim, 3	
12	1001150326	2	Shim, 1.2	
13	1001162995	1	Axle	
14	1001163580	2	Axle Lockout Cylinder Assembly (See CYLINDER SECTION for Breakdown)	
15	1001164552	1	Pin	
16	3020039	AR	Lube	

FIGURE 1-2. STEER INSTALLATION WITHOUT TOW PACKAGE

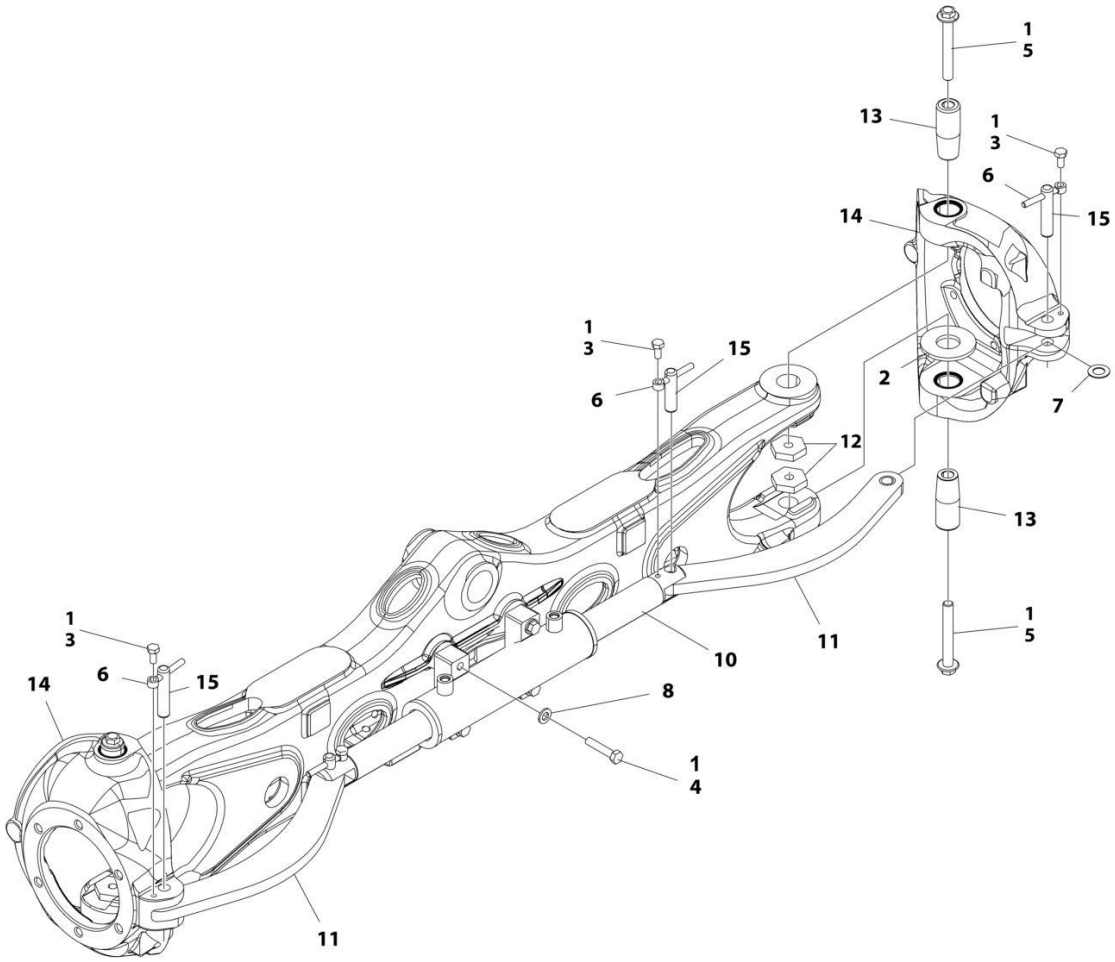

FIGURE 1-2. STEER INSTALLATION WITHOUT TOW PACKAGE

ITEM	PART NUMBER	QTY	DESCRIPTION	REV
	1001164092	Ref	STEER INSTALLATION WITHOUT TOW PACKAGE	F
1	0100011	AR	Compound, Locking	
2	0440271	2	Bearing, Thrust **(SN 0300203771 through 0300226080, SN E300000100 through E300004064, SN 1300007289 through 1300007393)**	
2	1001233139	2	Bearing, Thrust **(SN 0300226081 through 0300272360, SN E300004065 through E300007988, Except SN 0300272174 through 0300272184, Excluding E300007847)**	
3	0761011	4	Bolt M10 x 22	
4	0711220	4	Bolt M12 x 60 Grade 10.9	
5	1001190368	4	Bolt M16 x 120	
6	3841143	4	Keeper, Pin	
7	4740086	4	Washer	
8	5241200	4	Washer M12	
10	1001163178	1	Steer Cylinder Assembly (See CYLINDER SECTION for Breakdown)	
11	1001163179	2	Link	
11	1001164209	4	Bearing (2 Per Link)	
12	1001176848	4	Nut M16	
13	1001163405	4	Kingpin	
14	1001163715	2	Spindle	
14	0961948	4	Bearing (2 Per Spindle)	
14	1001163716	8	Seal (4 Per Spindle)	
15	3423304	4	Pin	

FIGURE 1-3. STEER INSTALLATION WITH TOW PACKAGE

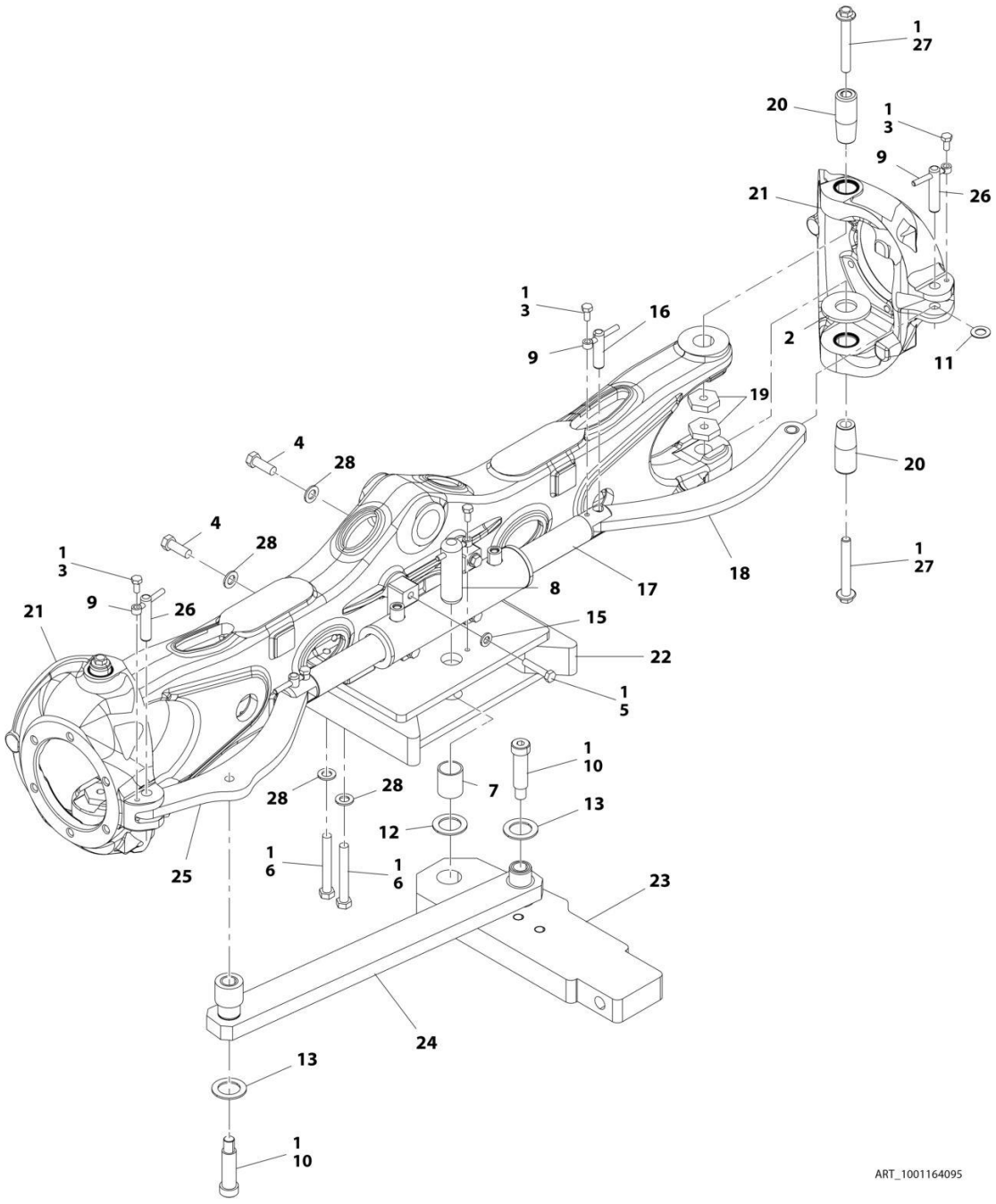

FIGURE 1-3. STEER INSTALLATION WITH TOW PACKAGE

ITEM	PART NUMBER	QTY	DESCRIPTION	REV
	1001164095	Ref	STEER INSTALLATION WITH TOW PACKAGE	D
1	0100011	AR	Compound, Locking	
2	0440271	2	Bearing, Thrust	
3	0761011	5	Bolt M10 x 22	
4	0701617	2	Bolt M16 x 45	
5	0711220	4	Bolt M12 x 60 Grade 10.9	
6	0711629	4	Bolt M16 x 120	
7	0962348	1	Bearing	
8	3422848	1	Pin	
9	3841143	5	Keeper, Pin	
10	3900295	2	Bolt 1 X 3	
11	4740086	4	Washer	
12	4740155	1	Washer	
13	4740491	2	Washer	
15	5241200	4	Washer M12	
16	1001139586	2	Pin	
17	1001163178	1	Steer Cylinder Assembly (See CYLINDER SECTION for Breakdown)	
18	1001163179	1	Link	
18	1001164209	2	Bearing	
19	1001176848	4	Nut M16	
20	1001163405	4	Kingpin	
21	1001163715	2	Spindle	
21	0961948	4	Bearing (2 per Spindle)	
21	1001163716	8	Seal (4 per Spindle)	
22	1001163717	1	Bracket, Tow	
23	1001163722	1	Plate	
24	1001163724	1	Link	
24	0962292	4	Bearing	
25	1001163726	1	Link	
25	1001164209	2	Bearing	
26	3423304	2	Pin	
27	1001190368	4	Bolt M16 x 120	
28	5241600	6	Washer M16	

FIGURE 1-4. WHEEL DRIVE INSTALLATION (2WD)

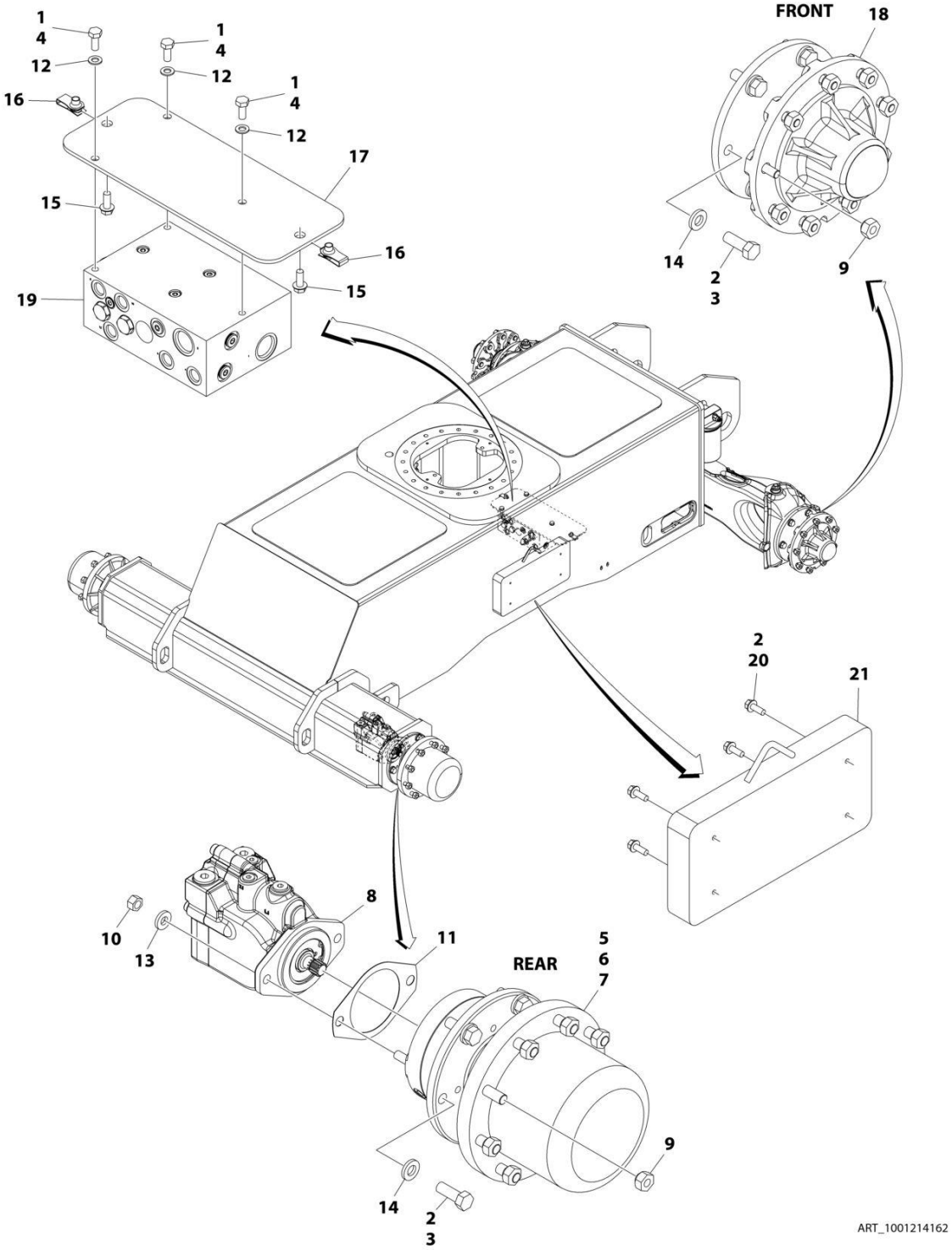

FIGURE 1-4. WHEEL DRIVE INSTALLATION (2WD)

ITEM	PART NUMBER	QTY	DESCRIPTION	REV
	1001214162	Ref	WHEEL DRIVE INSTALLATION (2WD)	B
1	0100011	AR	Compound, Locking	
2	0100019	AR	Compound, Locking	
3	0682014	24	Bolt, 5/8 x 1-3/4 (Grade 8)	
4	0761012	3	Bolt, M10 x 25	
5	2300016	AR	Fluid, Hydraulic	
6	2780267	2	Drive Hub Assembly - Rear (See DRIVE HUB AND BRAKE ASSEMBLY - REAR for Breakdown)	
7	3020008	AR	Lubricant	
8	3160351	2	Drive Motor Assembly (See DRIVE MOTOR ASSEMBLY (2WD) for Breakdown)	
9	3300106	36	Lugnut	
10	3311801	4	Nut, 1/2	
11	3960526	2	Gasket, Brake	
12	4812000	3	Washer, M10	
13	4891800	4	Washer, 1/2	
14	4892000	24	Washer, 5/8	
15	5251012	2	Bolt, M10 x 25	
16	1001118972	2	Nut, M10 x 1.5	
17	1001163959	1	Plate, Mounting	
18	1001214174	2	Hub Spindle Assembly - Front (See HUB SPINDAL ASSEMBLY for Breakdown)	
19	1001214317	1	Traction Valve Assembly - 2WD (See TRACTION VALVE ASSEMBLY - 2WD for Breakdown)	
20	0811608	8	Bolt 3/8 x 1	
21	1001215509	2	Weight	

FIGURE 1-5. WHEEL DRIVE INSTALLATION (4WD)

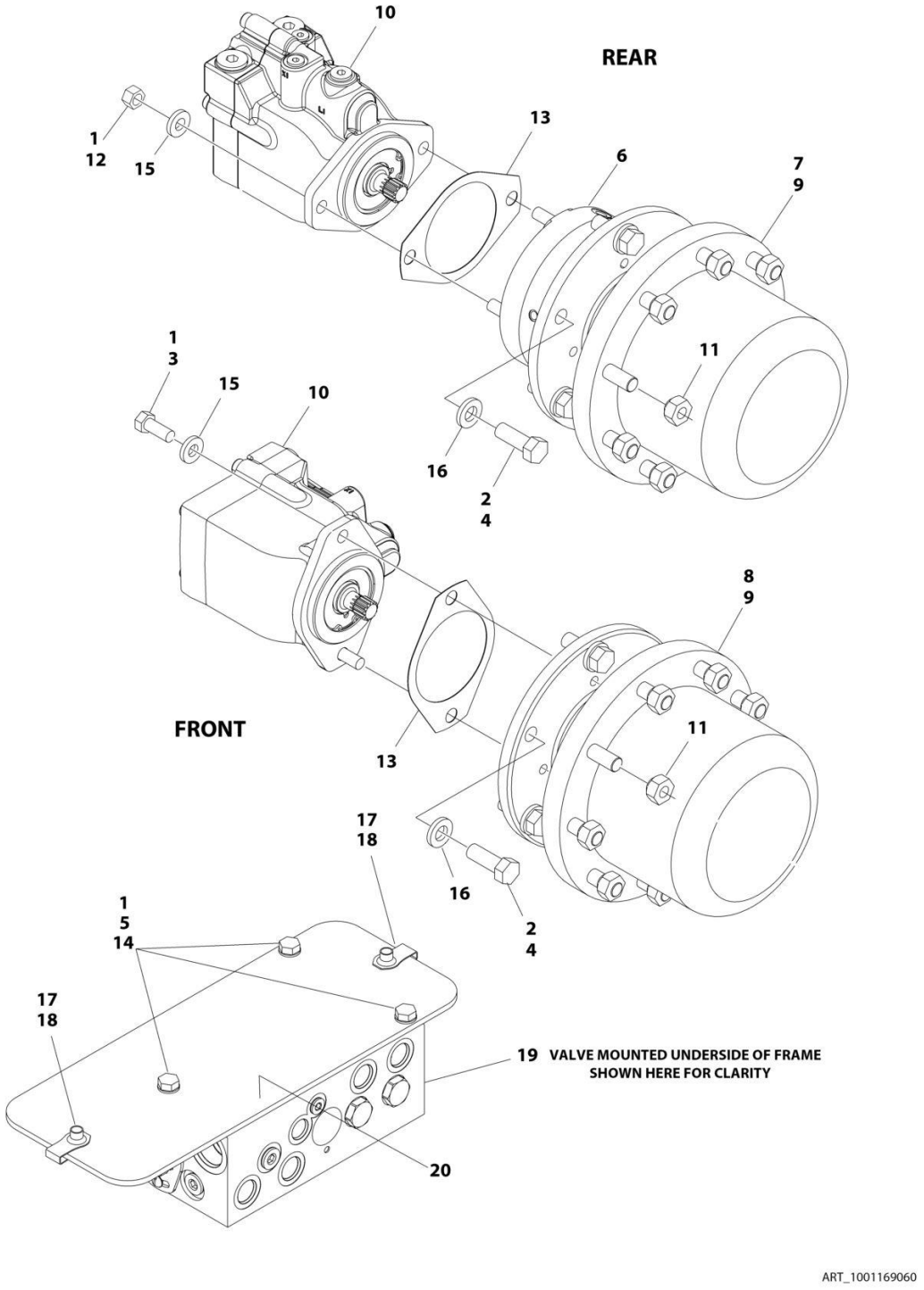

FIGURE 1-5. WHEEL DRIVE INSTALLATION (4WD)

ITEM	PART NUMBER	QTY	DESCRIPTION	REV
	1001169060	Ref	WHEEL DRIVE INSTALLATION (4WD)	C
1	0100011	AR	Compound, Locking	
2	0100019	AR	Compound, Locking	
3	0681810	4	Bolt, 1/2 x 1-1/4 (Grade 8)	
4	0682014	24	Bolt, 5/8 x 1-3/4 (Grade 8)	
5	0761012	3	Bolt, M10 x 25	
6	2300016	AR	Fluid, Hydraulic	
7	2780267	2	Drive Hub Assembly - Rear (See DRIVE HUB AND BRAKE ASSEMBLY - REAR for Breakdown)	
8	2780268	2	Drive Hub Assembly - Front (See DRIVE HUB ASSEMBLY - FRONT for Breakdown)	
9	3020008	AR	Lubricant	
10	3160348	4	Drive Motor Assembly (See DRIVE MOTOR ASSEMBLY (4WD) for Breakdown)	
11	3300106	36	Lugnut	
12	3311801	4	Nut, 1/2	
13	3960526	4	Gasket, Brake	
14	4812000	3	Washer, M10	
15	4891800	8	Washer, 1/2 Hardened	
16	4892000	24	Washer, 5/8	
17	5251012	2	Bolt, M10 x 25	
18	1001118972	2	Nut, M10 x 1.5	
19	1001162537	1	Traction Valve Assembly (See TRACTION VALVE ASSEMBLY for Breakdown)	
20	1001163959	1	Plate, Mounting	

FIGURE 1-6. DRIVE HUB AND BRAKE ASSEMBLY - REAR

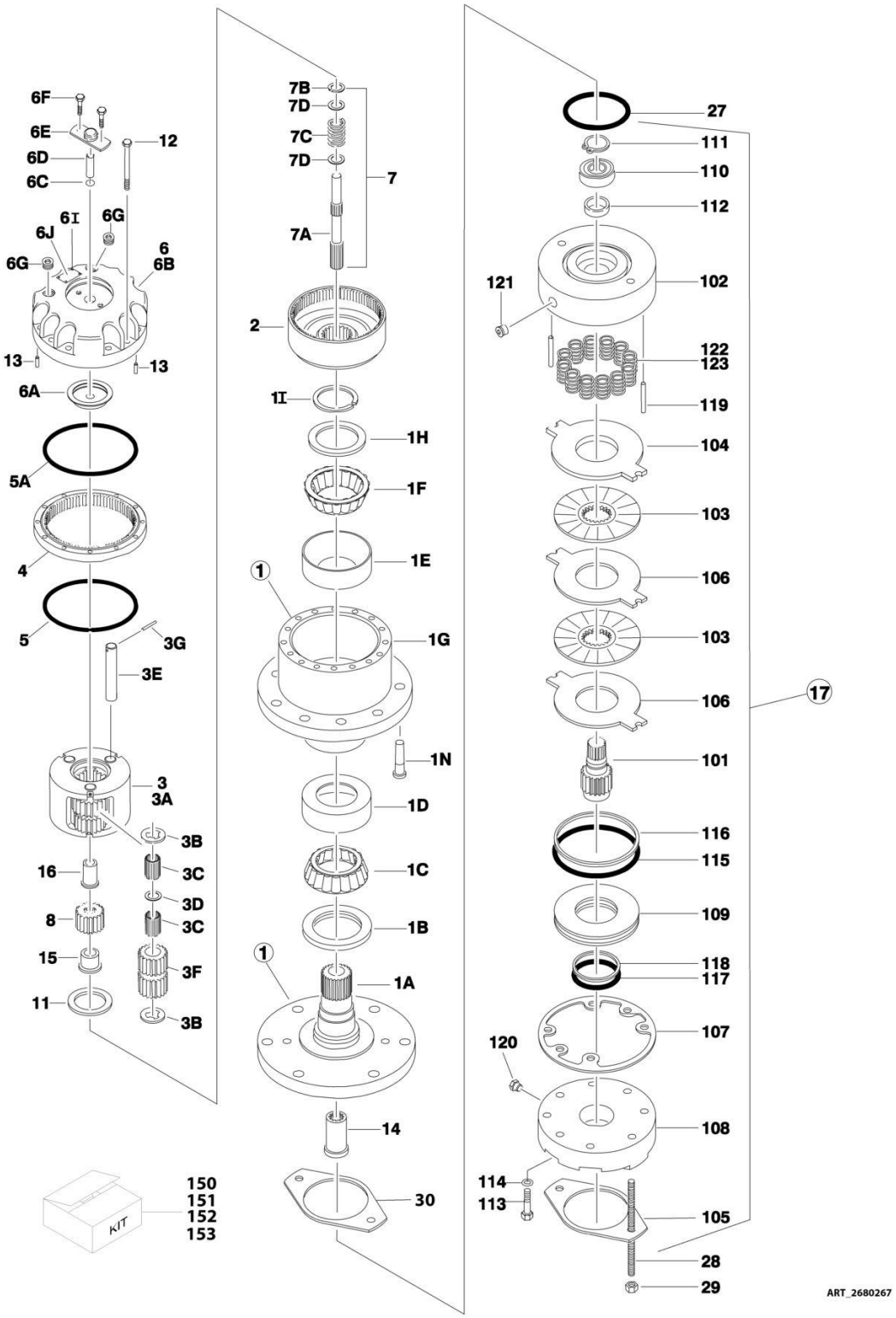

FIGURE 1-6. DRIVE HUB AND BRAKE ASSEMBLY - REAR

ITEM	PART NUMBER	QTY	DESCRIPTION	REV
	2780267	Ref	DRIVE HUB AND BRAKE ASSEMBLY - REAR	D
1	See Note	1	Spindle/Housing Assembly (Note: Purchase Individual Components)	
1A	7017059	1	Spindle	
1B	7001998	1	Seal	
1C	7010429	1	Cone, Bearing (Includes Item 1D)	
1D	7010429	1	Cup, Bearing (Includes Item 1C)	
1E	7000257	1	Cup, Bearing	
1F	7000258	1	Cone, Bearing	
1G	7007601	1	Housing/Ring Gear	
1H	7000232	1	Washer, Thrust	
1I	7000229	1	Ring, Retaining	
1N	7007640	9	Stud, Wheel	
2	7000246	1	Gear, Internal	
3	7024712	1	Carrier Assembly	
3A	See Note	NSS	Carrier (Note: Use p/n 7024712)	
3B	See Note	NSS	Ring, Retaining (Note: Use p/n 7024712)	
3C	See Note	NSS	Bearing, Needle (Note: Use p/n 7024712)	
3D	See Note	NSS	Washer, Thrust (Note: Use p/n 7024712)	
3E	See Note	NSS	Shaft, Planet (Note: Use p/n 7024712)	
3F	See Note	NSS	Gear, Planet (Note: Use p/n 7024712)	
3G	See Note	NSS	Roll Pin (Note: Not Available for Purchase)	
4	7000248	1	Ring Gear	
5	7000230	1	O-Ring	
5A	7017070	1	O-Ring	
6	70001349	1	Cover Assembly Kit	
6A	See Note	NSS	Spacer, Thrust (Note: Use p/n 70001349)	
6B	See Note	NSS	Plate, Cover (Note: Use p/n 70001349)	
6C	See Note	NSS	O-Ring (Note: Use p/n 70001349)	
6D	See Note	NSS	Rod, Disconnect (Note: Use p/n 70001349)	
6E	See Note	NSS	Cap, Disengage (Note: Use p/n 70001349)	
6F	See Note	NSS	Bolt (Note: Use p/n 70001349)	
6G	See Note	NSS	Plug, Pipe (Note: Use p/n 70001349)	
6I	See Note	NSS	Rivet (Note: Not Available for Purchase)	
6J	See Note	NSS	Plate, ID (Note: Not Available for Purchase)	
7		Ref	Input Shaft Assembly	
7A	7024714	1	Shaft	
7B	7000261	1	Ring, Retaining	
7C	7000262	1	Spring	
7D	7000263	2	Spacer, Thrust	
8	7024713	1	Gear, Sun	
11	7000253	1	Washer, Thrust	
12	7017067	12	Bolt	
13	7017080	4	Pin, Dowell	
14	7000206	1	Coupling	
15	7024715	1	Spacer, Input	
16	7024716	1	Spacer, Input	
17	7024182	1	Brake Assembly (See Items 101-153 for Breakdown)	
27	7024705	1	O-Ring	
28	7024717	2	Rod, Threaded	

SECTION 1 - FRAME

ITEM	PART NUMBER	QTY	DESCRIPTION	REV
29	7024718	2	Nut, 1/2	
30	70005483	1	Gasket	
	7024182	Ref	BRAKE ASSEMBLY	
101	7024189	1	Shaft	
102	See Note	NSS	Housing (Note: Use p/n 7024182)	
103	See Note	NSS	Plate, Friction (Note: Use p/n 7024193)	
104	See Note	NSS	Plate, Pressure (Note: Use p/n 7024193)	
105	7000731	1	Gasket	
106	See Note	NSS	Plate, Outer (Note: Use p/n 7024193)	
107	See Note	1	Gasket (Note: Use Item 150, 152 or 153)	
108	7024191	1	Cylinder	
109	7024192	1	Piston	
110	See Note	NSS	Bearing, Ball (Note: Use p/n 7024197)	
111	See Note	NSS	Ring, Retaining (Note: Use p/n 7024197)	
112	See Note	NSS	Seal, Shaft (Note: Use p/n 7024197)	
113	See Note	NSS	Capscrew (Note: Not Available for Purchase)	
114	See Note	NSS	Lockwasher (Note: Not Available for Purchase)	
115	See Note	NSS	O-Ring (Note: Not Available for Purchase)	
116	See Note	NSS	Ring, Back-up (Note: Not Available for Purchase)	
117	See Note	NSS	O-Ring (Note: Not Available for Purchase)	
118	See Note	NSS	Ring, Back-up (Note: Not Available for Purchase)	
119	7024190	2	Pin, Dowel	
120	See Note	NSS	Plug (Note: Not Available for Purchase)	
121	See Note	NSS	Plug (Note: Not Available for Purchase)	
122	See Note	NSS	Spring Kit (Natural) (Note: Use p/n 7024196)	
123	See Note	2	Spring Kit (Blue) (Note: Use p/n 7024196)	
150	7024194	1	Brake Seal Kit (Includes Items 105, 107 & 115-118)	
151	7024196	1	Brake Spring Kit (Includes 12 Natural Colored and 2 Blue Colored Springs Items 122 & 123)	
152	7024193	1	Brake Friction Disc Kit (Includes Items 103, 104, 106 & 107)	
153	7024197	1	Brake Bearing Kit (Includes Items 107 & 110-112)	

FIGURE 1-7. DRIVE HUB ASSEMBLY - FRONT

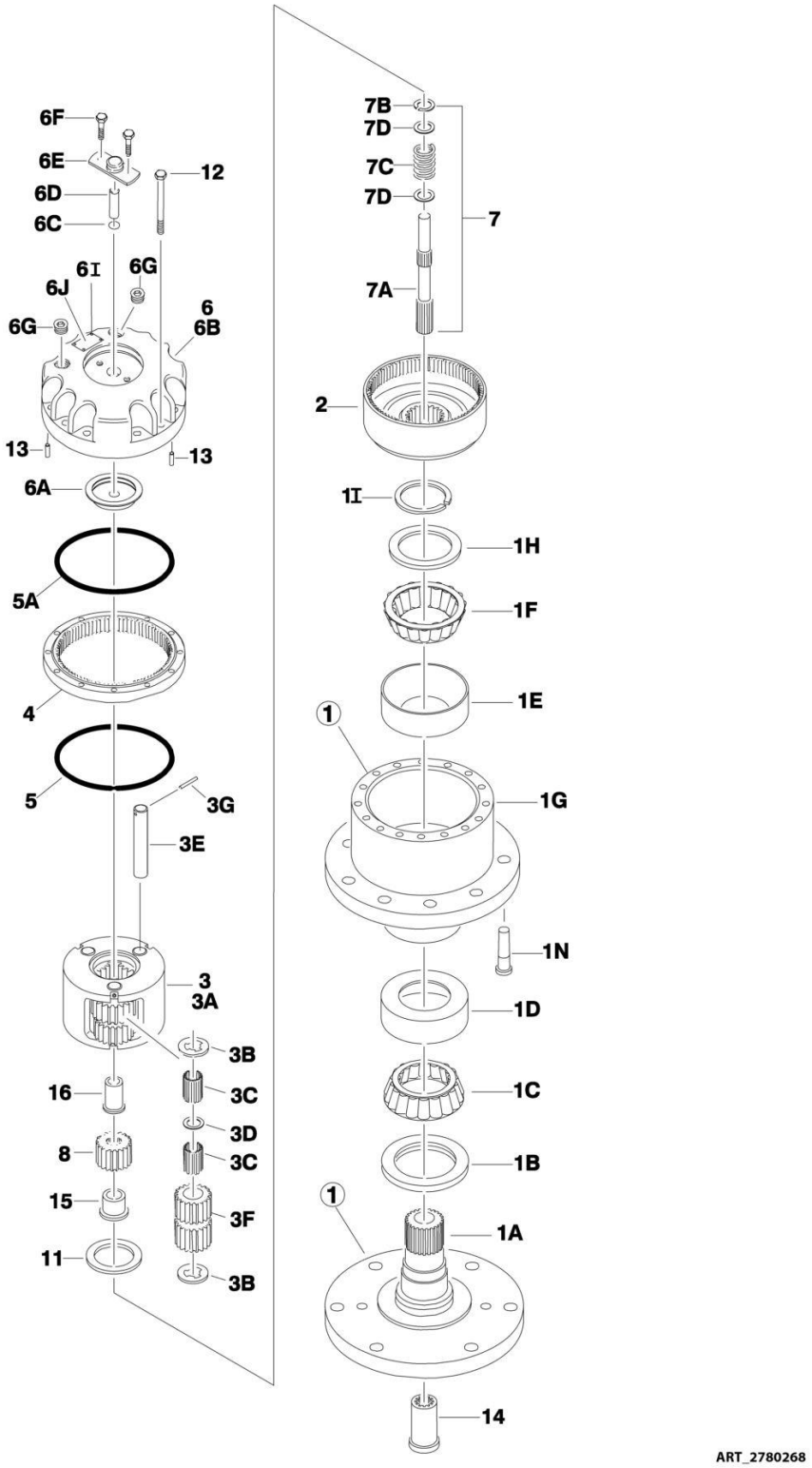

FIGURE 1-7. DRIVE HUB ASSEMBLY - FRONT

ITEM	PART NUMBER	QTY	DESCRIPTION	REV
	2780268	Ref	DRIVE HUB ASSEMBLY - FRONT	A
1	See Note	1	Spindle/Housing Assembly (Note: Purchase Individual Components)	
1A	7017059	1	Spindle	
1B	7001998	1	Seal	
1C	7010429	1	Cone, Bearing (Includes Item 1D)	
1D	7010429	1	Cup, Bearing (Includes Item 1C)	
1E	7000257	1	Cup, Bearing	
1F	7000258	1	Cone, Bearing	
1G	7007601	1	Housing/Ring Gear	
1H	7000232	1	Washer, Thrust	
1I	7000229	1	Ring, Retaining	
1N	7007640	9	Stud, Wheel	
2	7000246	1	Gear, Internal	
3	7024712	1	Carrier Assembly	
3A	See Note	NSS	Carrier (Note: Use p/n 7024712)	
3B	See Note	NSS	Ring, Retaining (Note: Use p/n 7024712)	
3C	See Note	NSS	Bearing, Needle (Note: Use p/n 7024712)	
3D	See Note	NSS	Washer, Thrust (Note: Use p/n 7024712)	
3E	See Note	NSS	Shaft, Planet (Note: Use p/n 7024712)	
3F	See Note	NSS	Gear, Planet (Note: Use p/n 7024712)	
3G	See Note	NSS	Roll Pin (Note: Not Available for Purchase)	
4	7000248	1	Ring Gear	
5	7000230	1	O-Ring	
5A	7017070	1	O-Ring	
6	70001349	1	Cover Assembly Kit	
6A	See Note	NSS	Spacer, Thrust (Note: Use p/n 70001349)	
6B	See Note	NSS	Plate, Cover (Note: Use p/n 70001349)	
6C	See Note	NSS	O-Ring (Note: Use p/n 70001349)	
6D	See Note	NSS	Rod, Disconnect (Note: Use p/n 70001349)	
6E	See Note	NSS	Cap, Disengage (Note: Use p/n 70001349)	
6F	See Note	NSS	Bolt (Note: Use p/n 70001349)	
6G	See Note	NSS	Plug, Pipe (Note: Use p/n 70001349)	
6I	See Note	NSS	Rivet (Note: Not Available for Purchase)	
6J	See Note	NSS	Plate, ID (Note: Not Available for Purchase)	
7		Ref	Input Shaft Assembly	
7A	7024714	1	Shaft	
7B	7000261	1	Ring, Retaining	
7C	7000262	1	Spring	
7D	7000263	2	Spacer, Thrust	
8	7024713	1	Gear, Sun	
11	7000253	1	Washer, Thrust	
12	7017067	12	Bolt	
13	7017080	4	Pin, Dowell	
14	7000206	1	Coupling	
15	7024715	1	Spacer, Input	
16	7024716	1	Spacer, Input	

FIGURE 1-8. HUB - SPINDLE ASSEMBLY (2WD)

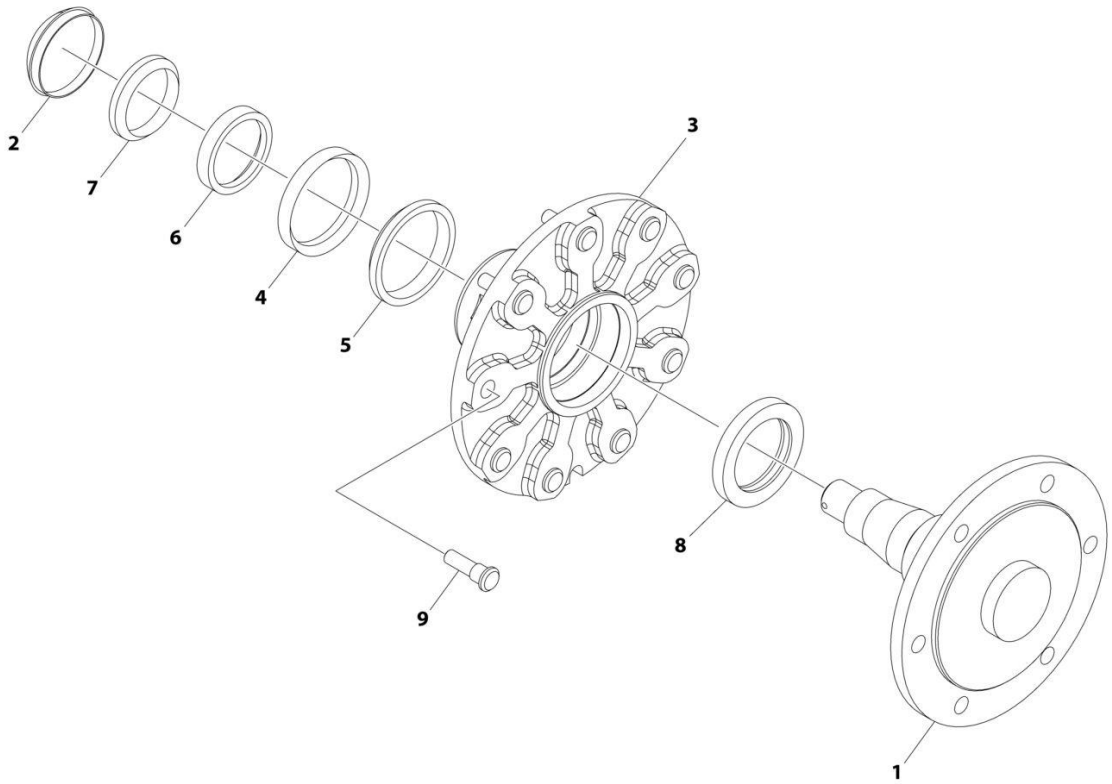

FIGURE 1-8. HUB - SPINDLE ASSEMBLY (2WD)

ITEM	PART NUMBER	QTY	DESCRIPTION	REV
	1001214174	Ref	HUB - SPINDLE ASSEMBLY (2WD)	C
1	See Note	NSS	Spindle, Adapter (Note: Not Available for Purchase)	
2	7020033	1	Cap, Dust	
3	7020035	1	Hub, Casting	
4	7020036	1	Cup, Bearing	
5	7020037	1	Cone, Bearing	
6	7020038	1	Cup, Bearing	
7	7020039	1	Cone, Bearing	
8	7020040	1	Seal	
9	7020041	9	Stud	

FIGURE 1-9. DRIVE MOTOR ASSEMBLY (2WD)

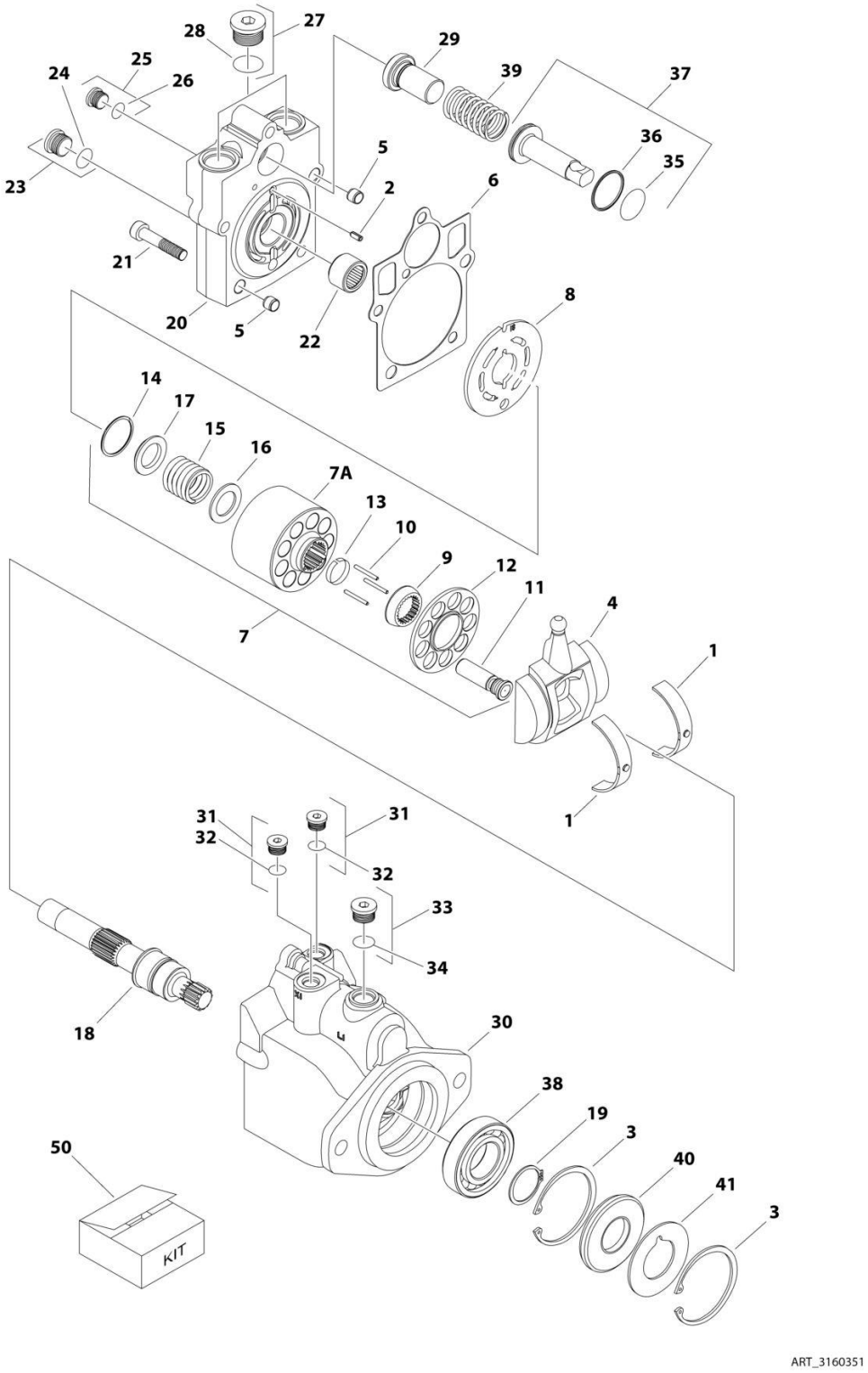

FIGURE 1-9. DRIVE MOTOR ASSEMBLY (2WD)

ITEM	PART NUMBER	QTY	DESCRIPTION	REV
	3160351	Ref	DRIVE MOTOR ASSEMBLY (2WD)	D
1	7022302	2	Bearing, Journal	
2	7007446	1	Pin	
3	7007438	2	Ring, Retaining	
4	7022305	1	Swashplate	
5	See Note	2	Pin (Note: Not Available for Purchase)	
6	7022328	1	Gasket	
7	7023907	1	Cylinder Block Kit (Includes Items 7A & 9-17)	
7A	7023907	1	Block, Cylinder	
8	7023908	1	Plate, Valve	
9	7021277	1	Guide, Slipper Retainer	
10	7021275	3	Pin, Slipper Hold Down	
11	7023907	9	Piston Assembly	
12	7021276	1	Retainer, Hold Down Pin	
13	7023907	1	Retainer, Slipper	
14	7022311	1	Ring, Retaining	
15	7022312	1	Spring	
16	7024868	1	Washer	
17	7022314	1	Retainer, Spring	
18	7023910	1	Shaft	
19	7007439	1	Ring, Retaining	
20	70000797	1	Cap, End - Axial	
21	7022368	5	Screw	
22	7021249	1	Bearing, Needle	
23	2220886	1	Plug (Includes Item 24)	
24	7022328	1	O-Ring	
25	2220883	1	Plug (Includes Item 26)	
26	7022328	1	O-Ring	
27	7027419	2	Plug (Includes Item 28)	
28	7022328	2	O-Ring	
29	7024853	1	Seat, Spring	
30	3160351	1	Housing	
31	2220883	2	Plug (Includes Item 32)	
32	7022328	2	O-Ring	
33	2220886	1	Plug (Includes Item 34)	
34	7022328	1	O-Ring	
35	7022328	1	O-Ring	
36	7022328	1	Ring, Seal	
37	7024854	1	Piston, Servo (Includes Items 35 & 36)	
38	7007437	1	Bearing	
39	7022326	1	Spring	
40	7022328	1	Seal, Lip	
41	7022371	1	Washer, Support	
50	7022328	1	Seal Kit (Includes Items 6, 24, 26, 28, 32, 34, 35, 36 & 40)	

FIGURE 1-10. DRIVE MOTOR ASSEMBLY (4WD)

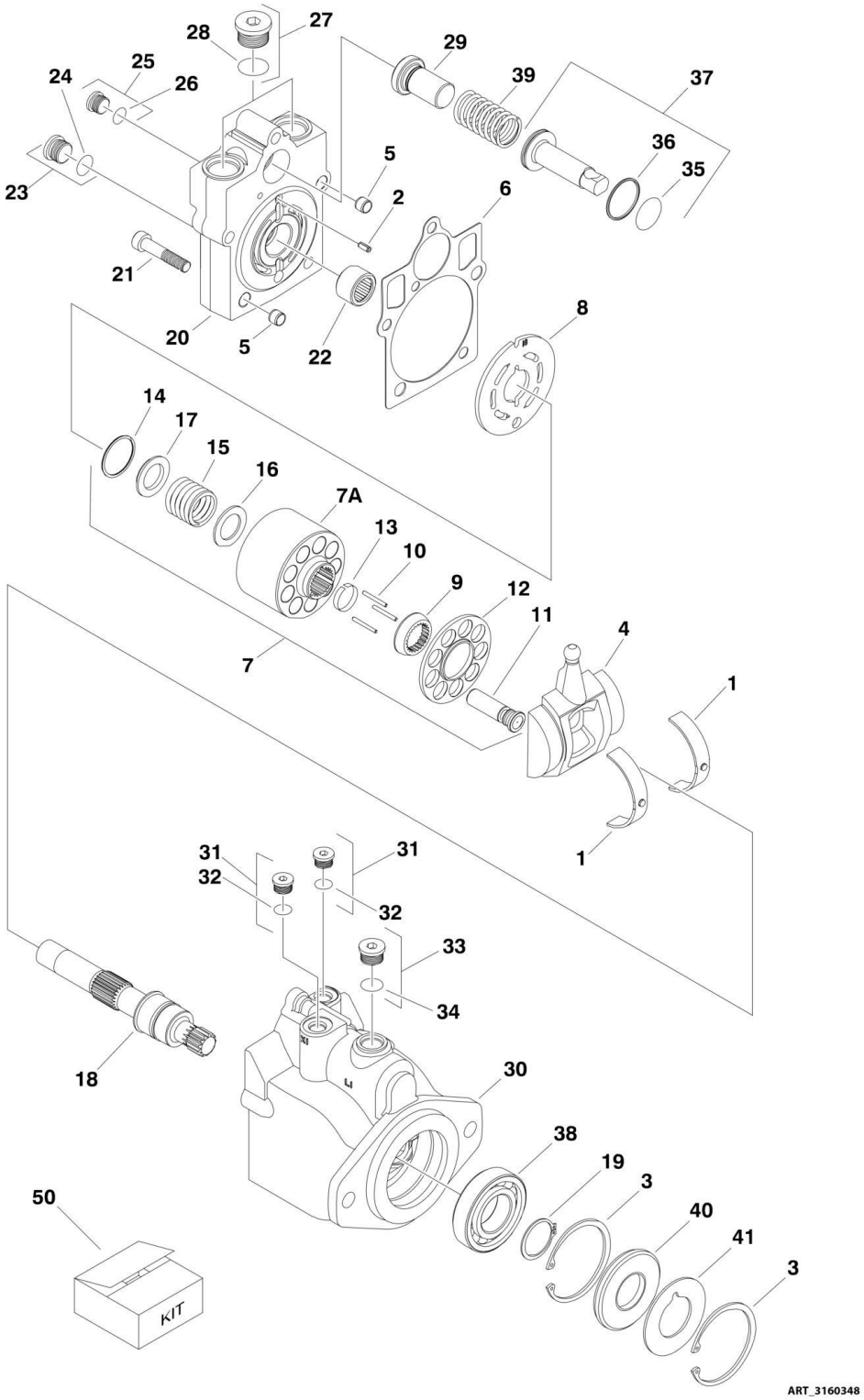

FIGURE 1-10. DRIVE MOTOR ASSEMBLY (4WD)

ITEM	PART NUMBER	QTY	DESCRIPTION	REV
	3160348	Ref	DRIVE MOTOR ASSEMBLY (4WD)	D
1	7022302	2	Bearing, Journal	
2	7007446	1	Pin	
3	7007438	2	Ring, Retaining	
4	7022305	1	Swash Plate	
5	See Note	2	Pin (Note: Not Available for Purchase)	
6	See Note	NSS	Gasket (Note: Use Item 50)	
7	7023907	1	Cylinder Block Kit (Includes Items 7A & 9-17)	
7A	See Note	NSS	Block, Cylinder (Note: Use p/n 7023907)	
8	7023908	1	Plate, Valve	
9	7021277	1	Guide, Slipper Retainer	
10	7021275	3	Pin, Slipper Hold Down	
11	See Note	NSS	Piston Assembly (Note: Use p/n 7023907)	
12	7021276	1	Retainer, Hold Down Pin	
13	7022310	1	Retainer, Slipper	
14	7022311	1	Ring, Retaining	
15	7022312	1	Spring	
16	7024868	1	Washer	
17	7022314	1	Retainer, Spring	
18	7023910	1	Shaft	
19	7007439	1	Ring, Retaining	
20	70000797	1	Cap, End - Axial	
21	7022368	5	Screw	
22	7021249	1	Bearing, Needle	
23	2220886	1	Plug (Includes Item 24)	
24	See Note	NSS	O-Ring (Note: Use Item 23 or 50)	
25	2220883	1	Plug (Includes Item 26)	
26	See Note	NSS	O-Ring (Note: Use Item 25 or 50)	
27	2220888	2	Plug (Includes Item 28)	
28	See Note	NSS	O-Ring (Note: Use Item 27 or 50)	
29	7022372	1	Seat, Spring	
30	See Note	NSS	Housing (Note: Use p/n 3160248)	
31	2220883	2	Plug (Includes Item 32)	
32	See Note	NSS	O-Ring (Note: Use Item 31 or 50)	
33	2220886	1	Plug (Includes Item 34)	
34	See Note	NSS	O-Ring (Note: Use Item 33 or 50)	
35	See Note	NSS	O-Ring (Note: Use Item 50)	
36	See Note	NSS	Seal, Ring (Note: Use Item 50)	
37	7024854	1	Piston, Servo (Includes Items 35 & 36)	
38	7007437	1	Bearing	
39	7022326	1	Spring	
40	See Note	NSS	Seal, Lip (Note: Use Item 50)	
41	7022371	1	Washer, Support	
50	7022328	1	Seal Kit (Includes Items 6, 24, 26, 28, 32, 34, 35, 36 & 40)	

FIGURE 1-11. TRACTION VALVE ASSEMBLY (2WD)

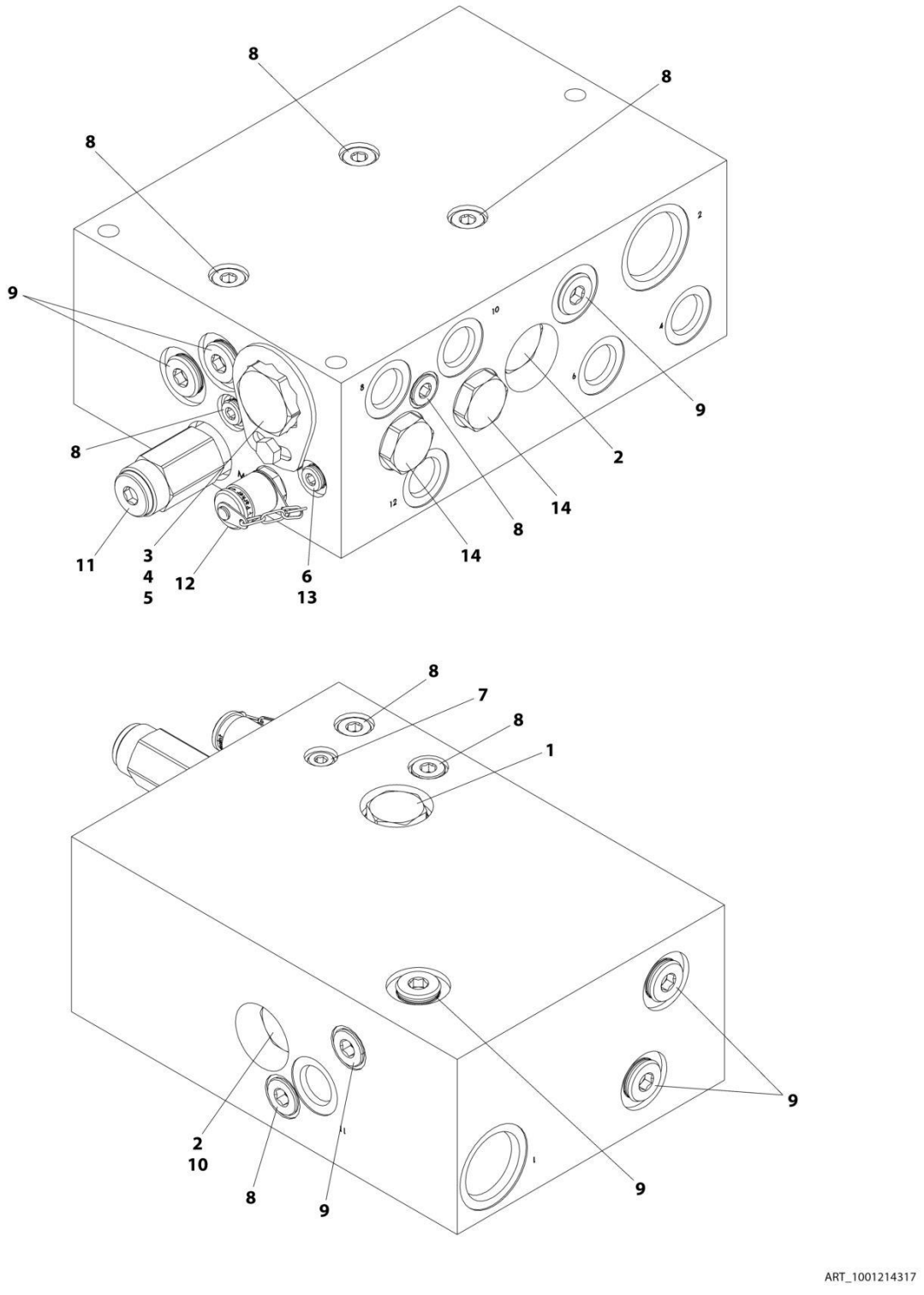

FIGURE 1-11. TRACTION VALVE ASSEMBLY (2WD)

ITEM	PART NUMBER	QTY	DESCRIPTION	REV
	1001214317	Ref	TRACTION VALVE ASSEMBLY (2WD)	D
1	7022397	1	Cartridge, Check Valve	
1	7022399	1	Seal Kit - 7022397 Valve	
2	70002390	2	Cartridge, Check Valve	
2	7022399	2	Seal Kit - 70002390 Valve	
3	70004885	1	Cartridge, Flow Divider Valve	
3	70004577	1	Seal Kit - 70004885 Valve	
4	70000781	1	Lockdown Kit	
5	70005827	1	Screw	
6	7024810	1	Orifice	
7	70005833	1	Plug #4	
8	70005830	8	Plug #6	
9	70005834	7	Plug	
10	7024881	1	Piston, Pilot	
11	70005831	1	Cartridge, Relief Valve	
11	7017496	1	Seal Kit - 70005831 Valve	
12	70005832	1	Fitting, Diagnostic	
13	2220883	1	Plug #4	
14	70026444	2	Cartridge, Check Valve	
14	7022399	2	Seal Kit - 70026444 Valve	

FIGURE 1-12. TRACTION VALVE ASSEMBLY (4WD)

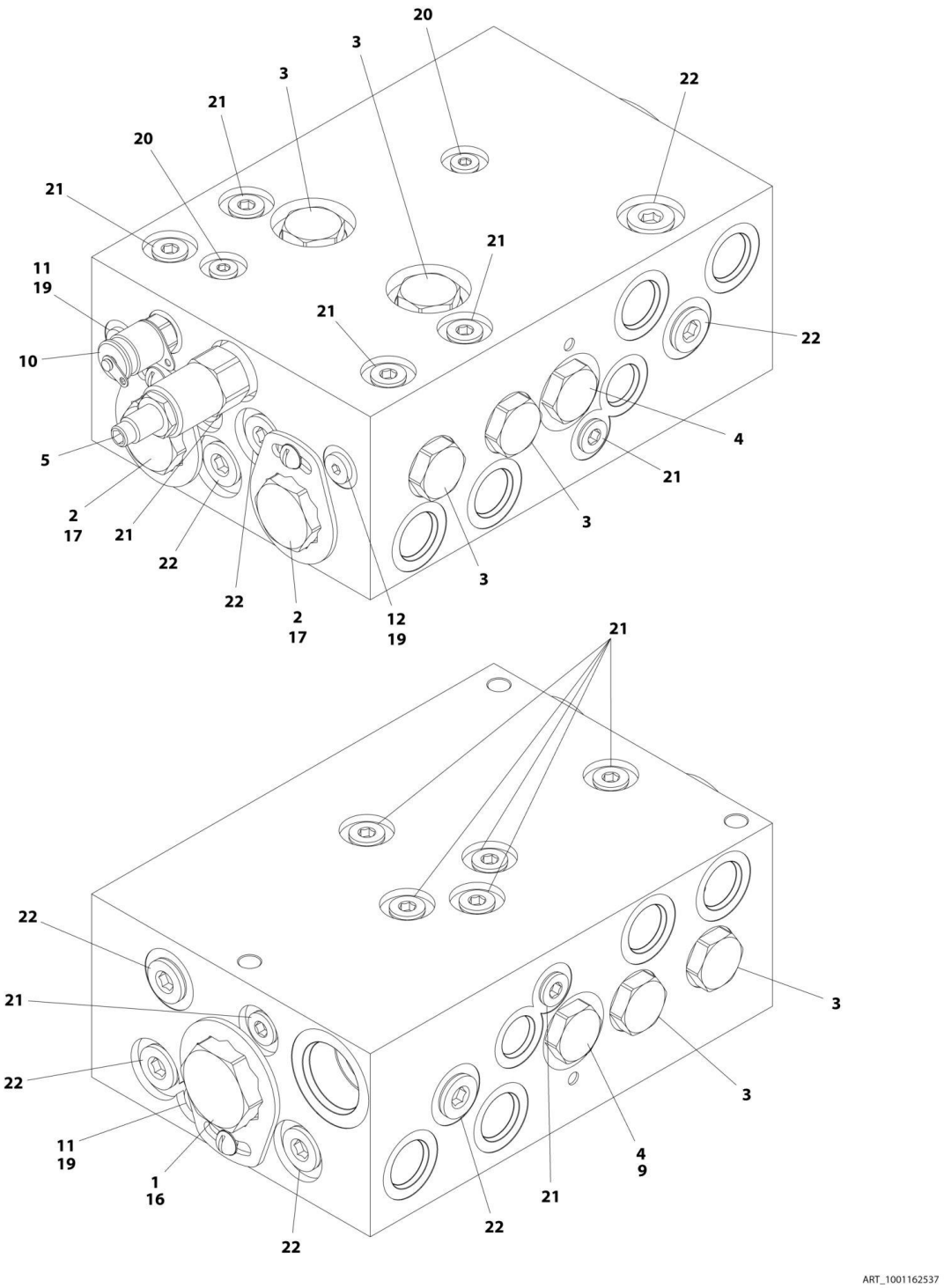

FIGURE 1-12. TRACTION VALVE ASSEMBLY (4WD)

ITEM	PART NUMBER	QTY	DESCRIPTION	REV
	1001162537	Ref	TRACTION VALVE ASSEMBLY (4WD)	E
1	70004017	1	Cartridge, Flow Divider Valve	
1	7021625	1	Seal Kit - 70004017 Valve	
2	70004885	2	Cartridge, Flow Divider Valve	
2	70004577	2	Seal Kit - 70004885 Valve	
3	7022397	6	Cartridge, Check Valve	
3	7022399	6	Seal Kit - 7022397 Valve	
4	7021639	2	Cartridge, Check Valve	
4	2900756	2	Seal Kit - 7021639 Valve	
5	70004886	1	Cartridge, Relief Valve	
5	7017496	1	Seal Kit - 70004886 Valve	
9	7024881	1	Piston, Pilot	
10	2221086	1	Fitting, Test Port	
11	70004884	2	Orifice	
12	70002209	1	Orifice	
16	70000781	1	Lockdown Kit	
17	70002962	2	Lockdown Kit	
19	2220883	3	Plug, #4	
20	See Note	NSS	Plug (Note: Not Available for Purchase)	
21	91164079	13	Plug	
22	91164057	8	Plug	

FIGURE 1-13. TIRE AND WHEEL INSTALLATION - 12 X 16.5 PNEUMATIC (AVAILABLE ON ANSI, ANSI EXPORT, CSA AND CHINA SPECS)

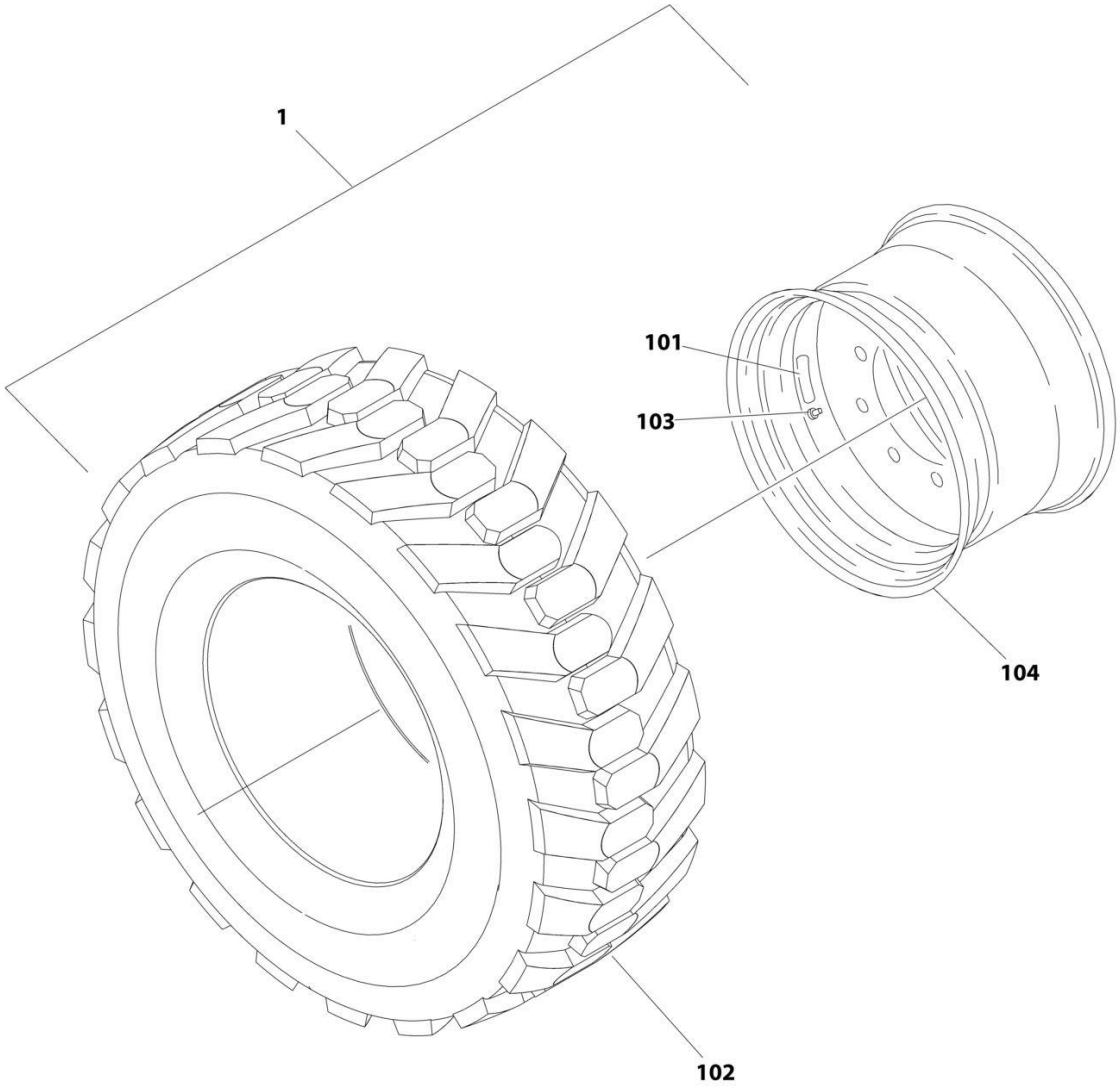

FIGURE 1-13. TIRE AND WHEEL INSTALLATION - 12 X 16.5 PNEUMATIC (AVAILABLE ON ANSI, ANSI EXPORT, CSA AND CHINA SPECS)

ITEM	PART NUMBER	QTY	DESCRIPTION	REV
	0270091	Ref	TIRE AND WHEEL INSTALLATION - 12 X 16.5 PNEUMATIC (AVAILABLE ON ANSI, ANSI EXPORT, CSA AND CHINA SPECS)	C
1	1001148863	Ref	Tire and Wheel Assembly - 12 x 16.5 (RH Side)	D
1	1001148864	Ref	Tire and Wheel Assembly - 12 x 16.5 (LH Side)	D
101	1702740	4	Decal - Tire Pressure	
102	4520216	4	Tire - 12 x 16.5	
103	4640113	4	Valve	
104	1001147274	4	Rim, Wheel	

FIGURE 1-14. TIRE AND WHEEL INSTALLATION - 12 X 16.5 PNEUMATIC WITH TIRE SEALANT (AVAILABLE ON ANSI, ANSI EXPORT, CSA AND CHINA SPECS)

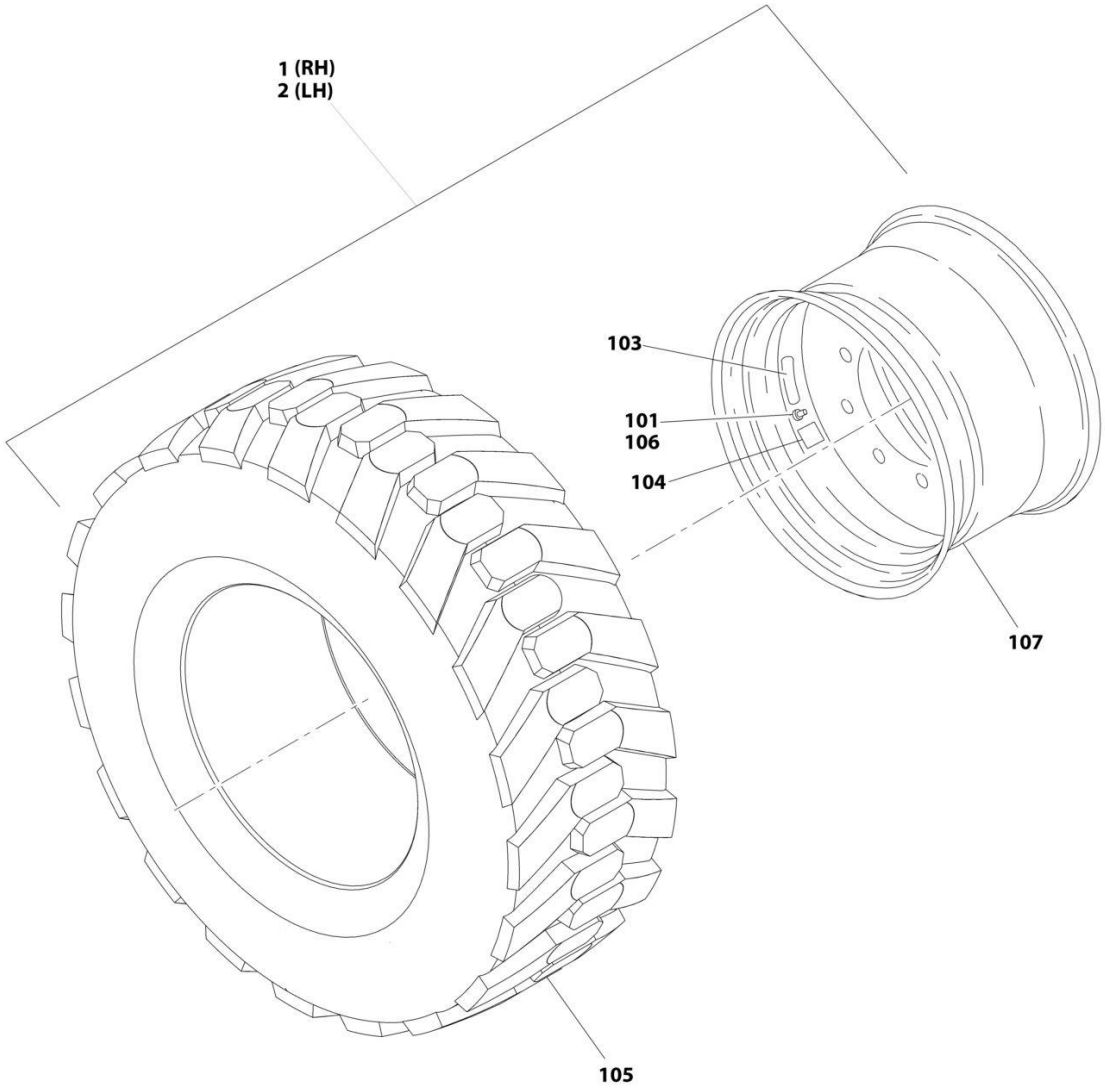

FIGURE 1-14. TIRE AND WHEEL INSTALLATION - 12 X 16.5 PNEUMATIC WITH TIRE SEALANT (AVAILABLE ON ANSI, ANSI EXPORT, CSA AND CHINA SPECS)

ITEM	PART NUMBER	QTY	DESCRIPTION	REV
	0272310	Ref	TIRE AND WHEEL INSTALLATION - 12 X 16.5 PNEUMATIC WITH TIRE SEALANT (AVAILABLE ON ANSI, ANSI EXPORT, CSA AND CHINA SPECS)	C
1	1001148871	2	Tire and Wheel Assembly (RH Side)	D
2	1001148872	2	Tire and Wheel Assembly (LH Side)	D
3	1705363	1	Decal - Tire Sealant (Not Shown - Located near Ground Controls)	
101	1120552	4	Cap, Valve Stem (Green)	
103	1702740	4	Decal - Tire Pressure	
104	1705364	4	Decal - Tire Sealant	
105	4520216	4	Tire 12 x 16.5	
106	4640113	4	Valve, Air	
107	1001147274	4	Rim, Wheel	

FIGURE 1-15. TIRE AND WHEEL INSTALLATION - 12 X 16.5 FOAM FILLED (AVAILABLE ON ALL SPECS)

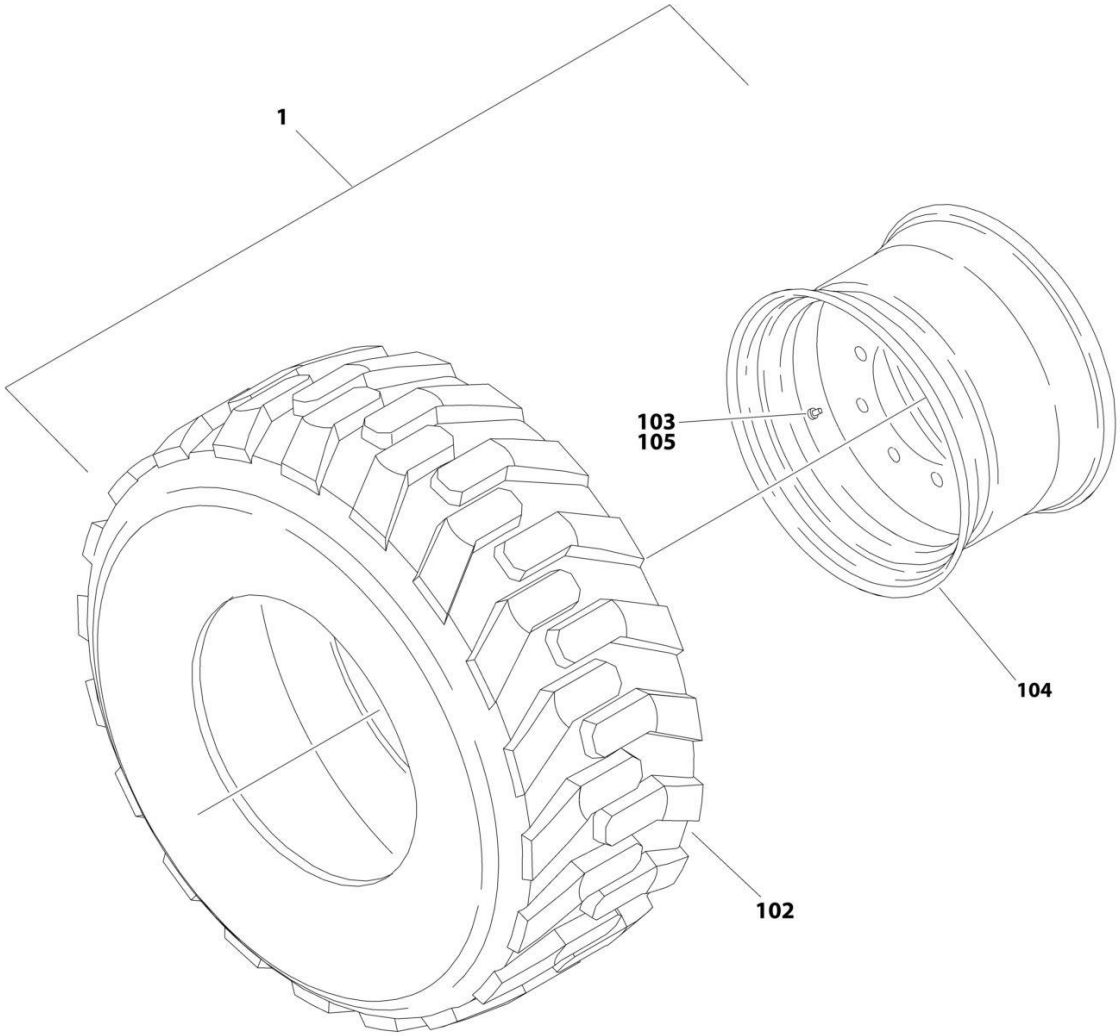

FIGURE 1-15. TIRE AND WHEEL INSTALLATION - 12 X 16.5 FOAM FILLED (AVAILABLE ON ALL SPECS)

ITEM	PART NUMBER	QTY	DESCRIPTION	REV
	0270092	Ref	TIRE AND WHEEL INSTALLATION - 12 X 16.5 FOAM FILLED (AVAILABLE ON ALL SPECS)	C
		Ref	Note: Assemblies may require ballast/foam filling to manufacturer's specifications prior to installing on a machine. Refer to Operation and Safety or Service and Maintenance Manuals.	
		Ref	Note: Purchase individual tire and/or rim only if able to foam fill tire and wheel assembly, otherwise, purchase complete assembly.	
1	1001148865	2	Tire and Wheel Assembly - 12 x 16.5 (RH Side)	G
1	1001148866	2	Tire and Wheel Assembly - 12 x 16.5 (LH Side)	G
102	4520216	4	Tire - 12 x 16.5	
103	4641122	4	Valve	
104	1001147274	4	Rim, Wheel	
105	1001149953	4	Cap, Valve Stem	

FIGURE 1-16. TIRE AND WHEEL INSTALLATION - 12 X 16.5 FF NON-MARKING (AVAILABLE ON ALL SPECS)

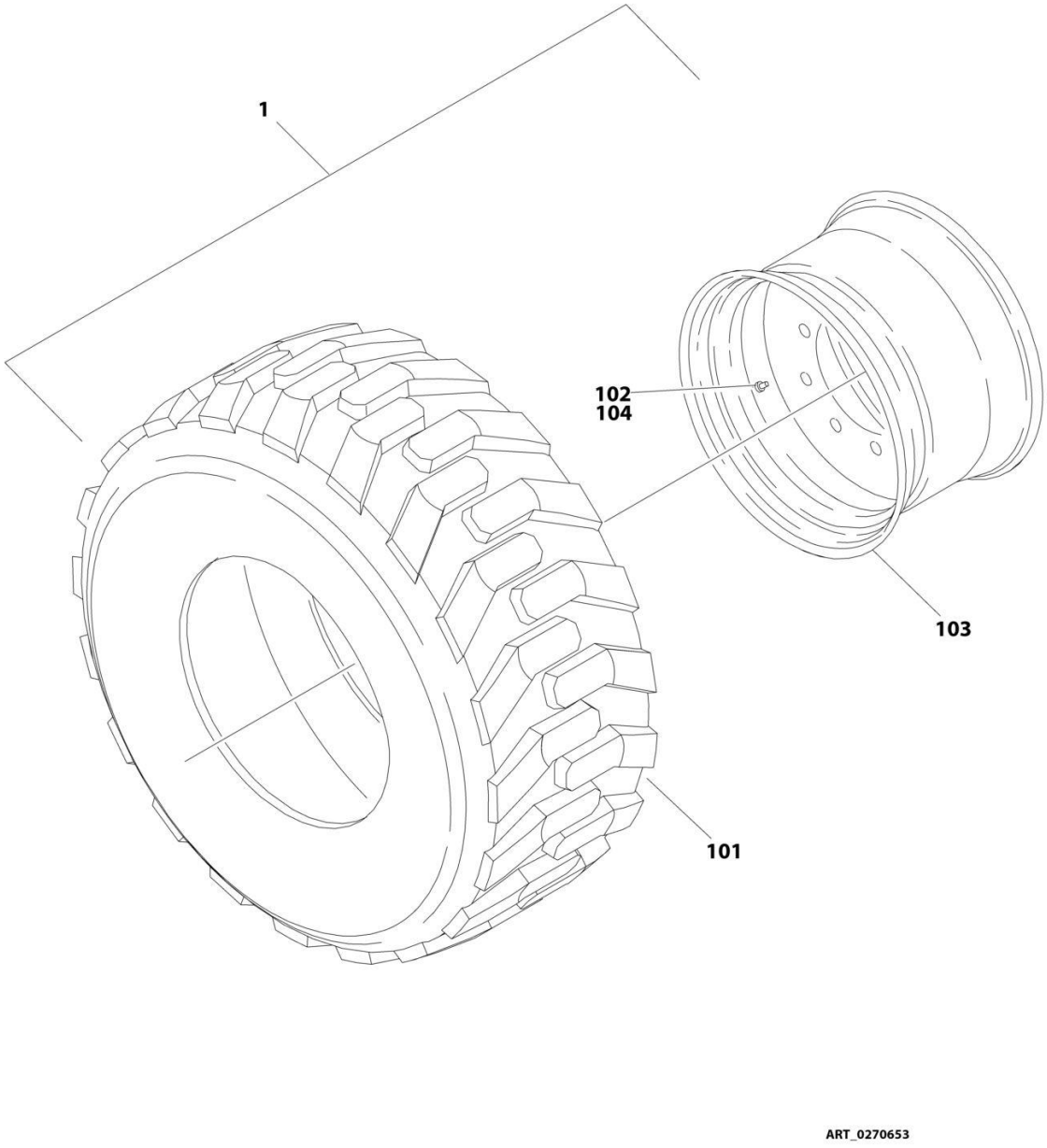

FIGURE 1-16. TIRE AND WHEEL INSTALLATION - 12 X 16.5 FF NON-MARKING (AVAILABLE ON ALL SPECS)

ITEM	PART NUMBER	QTY	DESCRIPTION	REV
	0270653	Ref	TIRE AND WHEEL INSTALLATION - 12 X 16.5 FOAM FILLED NON MARKING (AVAILABLE ON ALL SPECS)	B
		Ref	Note: Assemblies may require ballast/foam filling to manufacturer's specifications prior to installing on a machine. Refer to Operation and Safety or Service and Maintenance Manuals. Purchase individual tire and/or rim only if able to foam fill tire and wheel assembly, otherwise, purchase complete assembly.	
1	1001148869	2	Tire and Wheel Assembly - 12 x 16.5 Non Marking (RH Side)	H
1	1001148870	2	Tire and Wheel Assembly - 12 x 16.5 Non Marking (LH Side)	H
101	4520240	4	Tire 12 x 16.5 Non-Marking	
102	4641122	4	Valve	
103	1001147274	4	Rim, Wheel	
104	1001149953	4	Cap, Valve Stem	

FIGURE 1-17. TIRE AND WHEEL INSTALLATION - 14 X 17.5 PNEUMATIC (AVAILABLE ON ANSI, ANSI EXPORT, CSA AND CHINA SPECS)

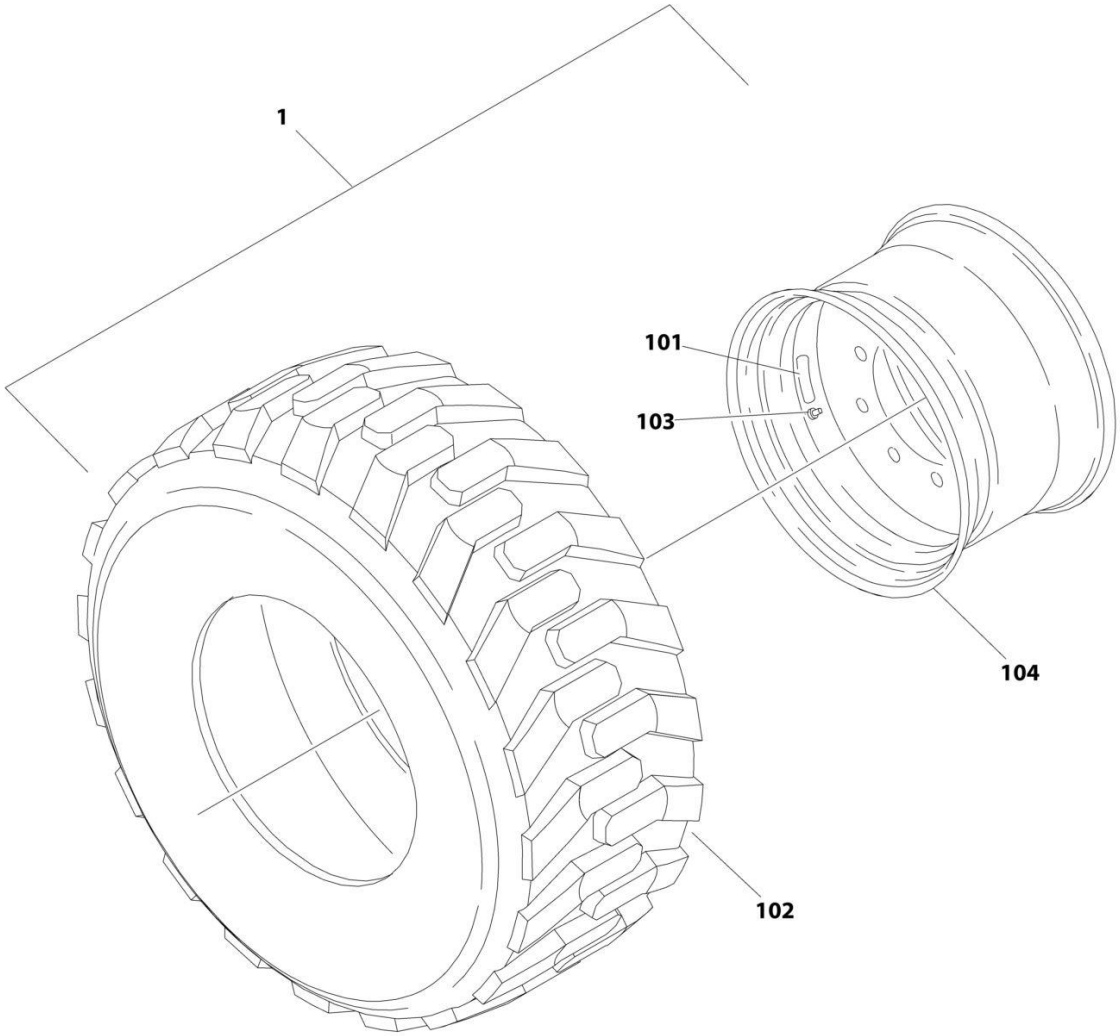

FIGURE 1-17. TIRE AND WHEEL INSTALLATION - 14 X 17.5 PNEUMATIC (AVAILABLE ON ANSI, ANSI EXPORT, CSA AND CHINA SPECS)

ITEM	PART NUMBER	QTY	DESCRIPTION	REV
	0271995	Ref	TIRE AND WHEEL INSTALLATION - 14 X 17.5 PNEUMATIC (AVAILABLE ON ANSI, ANSI EXPORT, CSA AND CHINA SPECS)	B
1	1001148873	Ref	Tire and Wheel Assembly - 14 x 17.5 (RH Side)	C
1	1001148874	Ref	Tire and Wheel Assembly - 14 x 17.5 (RH Side)	C
101	1702740	4	Decal - Tire Pressure	
102	4520259	4	Tire - 14 x 17.5	
103	4640113	4	Valve	
104	1001146397	4	Rim, Wheel	

FIGURE 1-18. TIRE AND WHEEL INSTALLATION - 14 X 17.5 FOAM FILLED (AVAILABLE ON ALL SPECS)

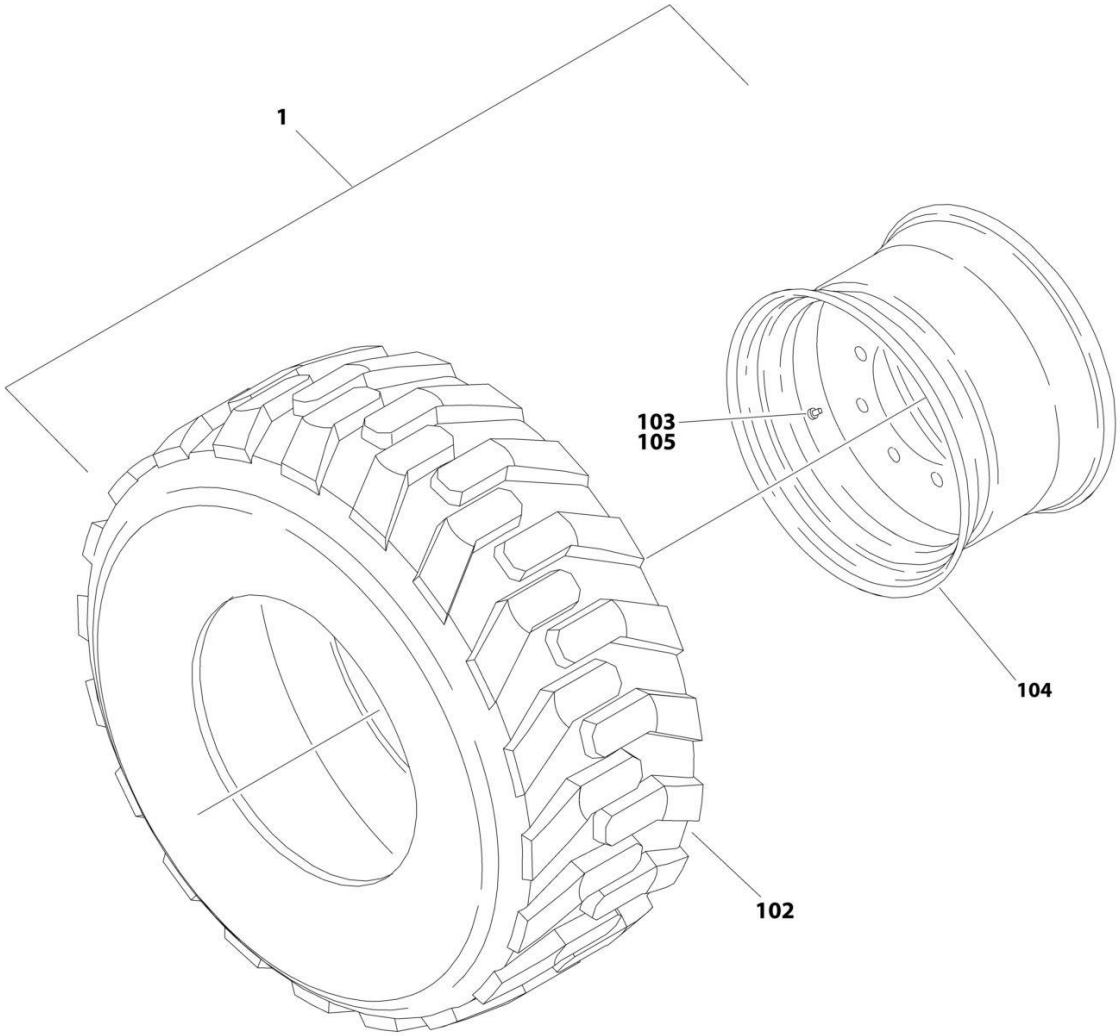

FIGURE 1-18. TIRE AND WHEEL INSTALLATION - 14 X 17.5 FOAM FILLED (AVAILABLE ON ALL SPECS)

ITEM	PART NUMBER	QTY	DESCRIPTION	REV
	0271998	Ref	TIRE AND WHEEL INSTALLATION - 14 X 17.5 FOAM FILLED (AVAILABLE ON ALL SPECS)	B
		Ref	Note: Assemblies may require ballast/foam filling to manufacturer's specifications prior to installing on a machine. Refer to Operation and Safety or Service and Maintenance Manuals. Purchase individual tire and/or rim only if able to foam fill tire and wheel assembly, otherwise, purchase complete assembly.	
1	1001148875	Ref	Tire and Wheel Assembly - 14 x 17.5 (RH Side)	F
1	1001148876	Ref	Tire and Wheel Assembly - 14 x 17.5 (LH Side)	F
102	4520259	4	Tire - 14 x 17.5	
103	4641122	4	Valve	
104	1001146397	4	Rim, Wheel	
105	1001149953	4	Cap, Valve Stem	

FIGURE 1-19. TIRE AND WHEEL INSTALLATION - 33 X 16LL X 16.1 PNEUMATIC TURF AND SAND (AVAILABLE ON ANSI, CSA, ANSI EXPORT AND CHINA SPECS)

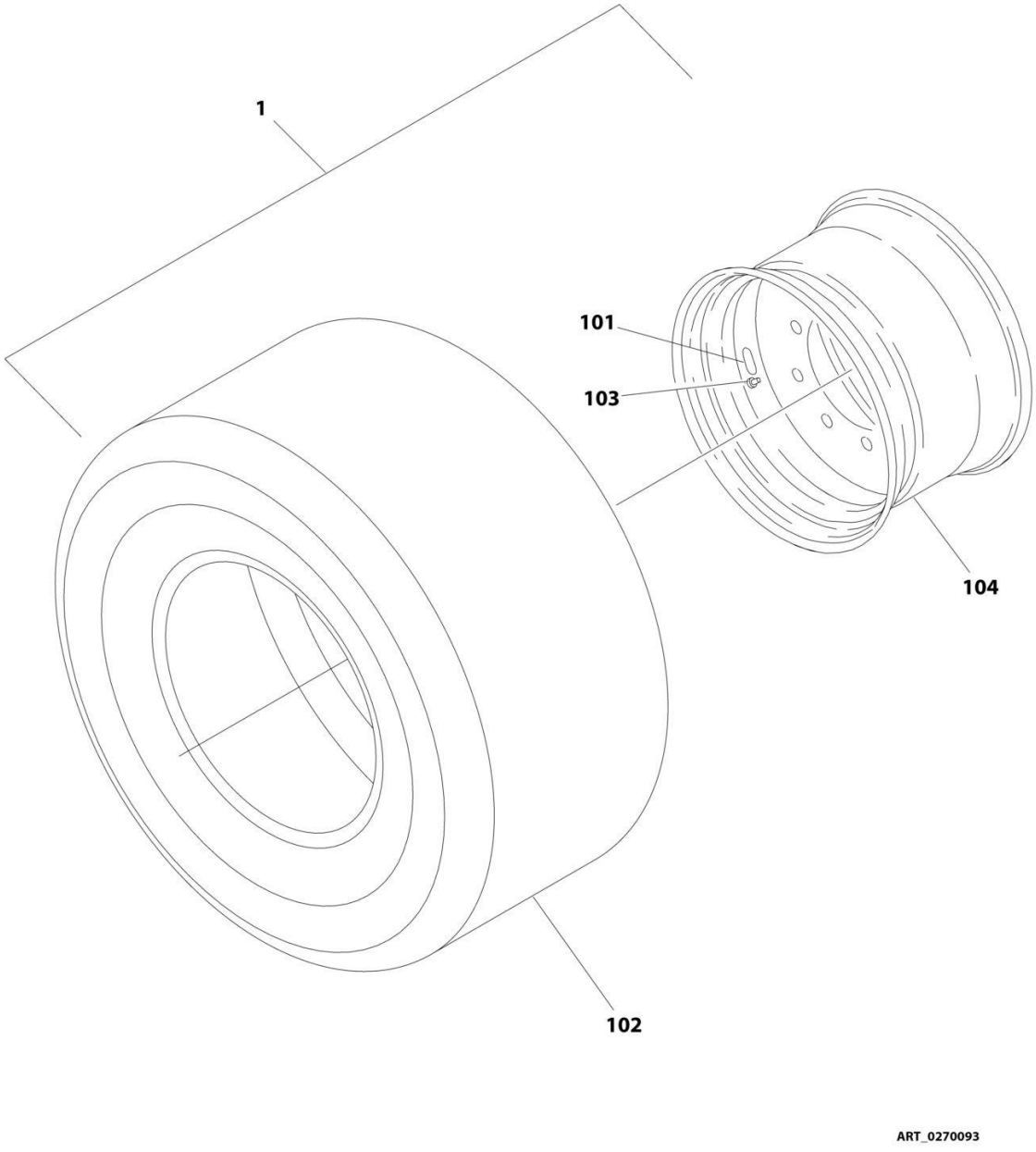

FIGURE 1-19. TIRE AND WHEEL INSTALLATION - 33 X 16LL X 16.1 PNEUMATIC TURF AND SAND (AVAILABLE ON ANSI, CSA, ANSI EXPORT AND CHINA SPECS)

ITEM	PART NUMBER	QTY	DESCRIPTION	REV
	0270093	Ref	TIRE AND WHEEL INSTALLATION - 33 X 16LL X 16.1 PNEUMATIC TURF AND SAND (AVAILABLE ON ANSI, CSA, ANSI EXPORT AND CHINA SPECS)	A
		Ref	Note: Turf/Sand Tires required additional chassis counterweight. See SPECIAL OPTIONS SECTION before installing this option.	
1	0270078	Ref	TIRE AND WHEEL ASSEMBLY - 33 X 16LL X 16.1 PNEUMATIC TURF AND SAND	A
101	1703067	4	Decal - Tire Pressure	
102	4520212	4	Tire - 33 x 16 LL x 16.1	
103	4640113	4	Valve	
104	4860214	4	Rim, Wheel	

FIGURE 1-20. FRAME SHIELD INSTALLATION - WITHOUT TOW BAR

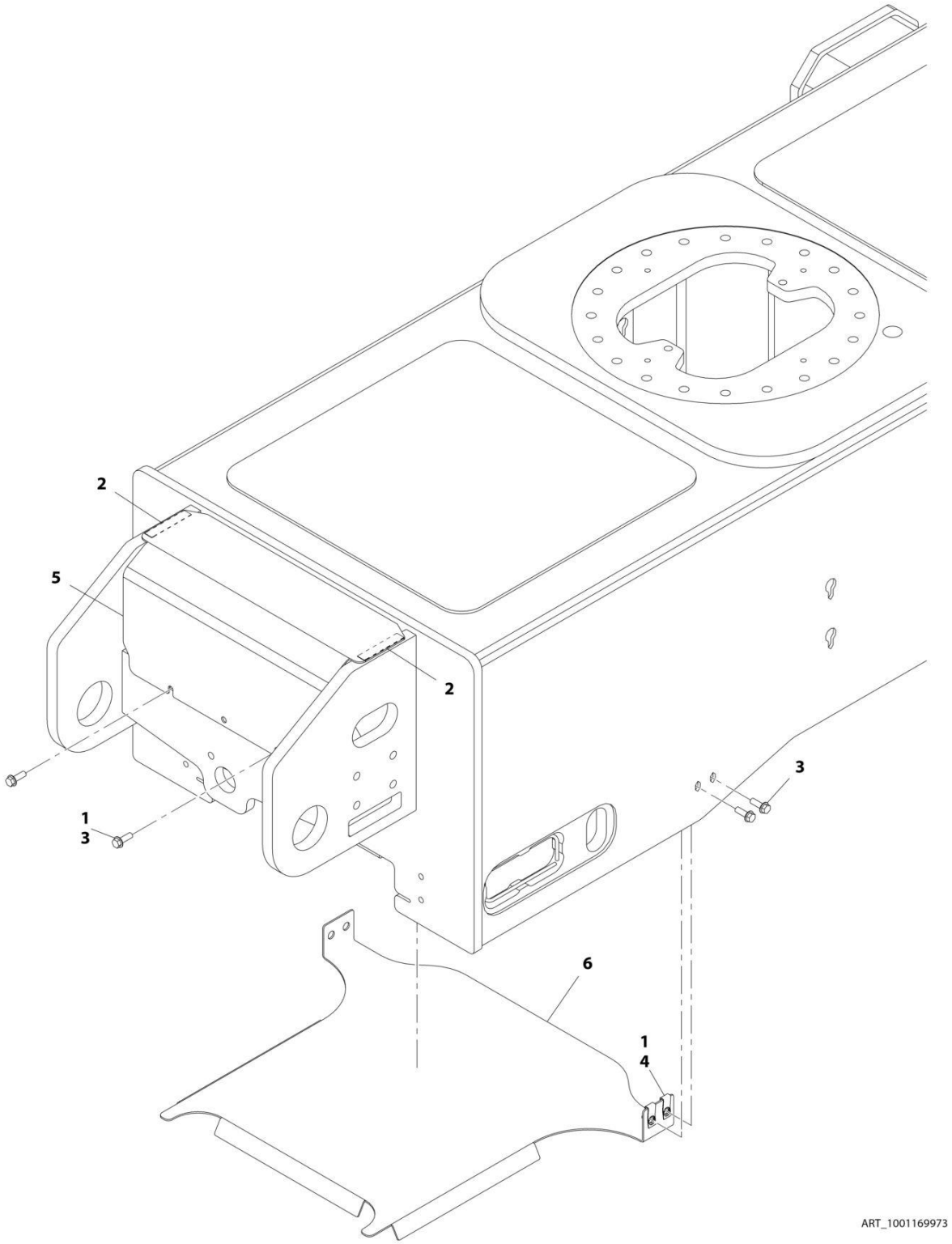

FIGURE 1-20. FRAME SHIELD INSTALLATION - WITHOUT TOW BAR

ITEM	PART NUMBER	QTY	DESCRIPTION	REV
	1001169973	Ref	FRAME SHIELD INSTALLATION - WITHOUT TOW BAR	E
1	0100011	AR	Compound, Locking	
2	4280296	8 in / 20.3cm	Strip, Wear	
3	5251014	6	Bolt, M10 x 30	
4	1001118972	4	Nut, M10 x 1.5	
5	1001169086	1	Plate, Cover	
6	1001169955	1	Plate, Valve Cover	

FIGURE 1-21. FRAME SHIELD INSTALLATION - WITH TOW BAR

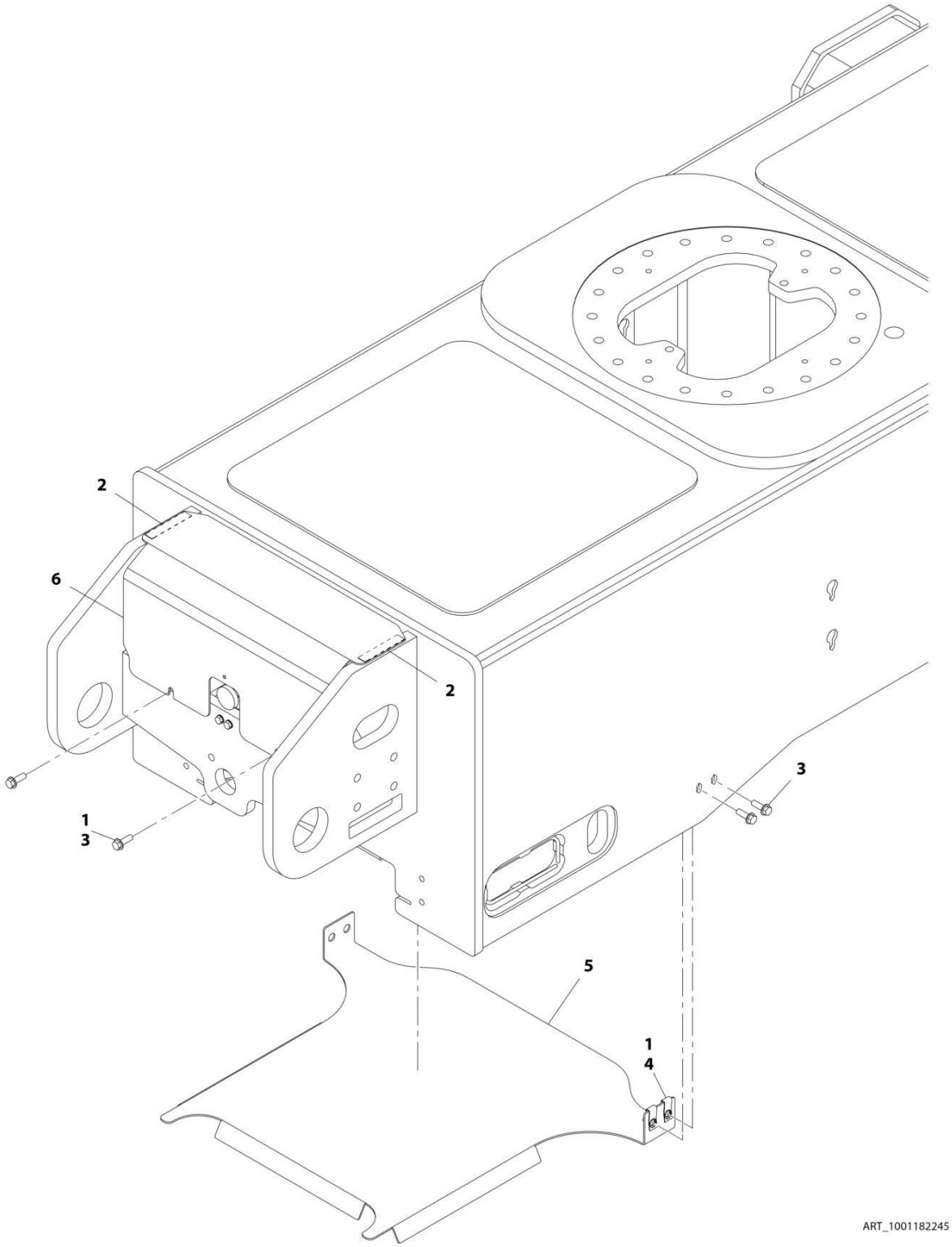

FIGURE 1-21. FRAME SHIELD INSTALLATION - WITH TOW BAR

ITEM	PART NUMBER	QTY	DESCRIPTION	REV
	1001182245	Ref	FRAME SHIELD INSTALLATION - WITH TOW BAR	C
1	0100011	AR	Compound, Locking	
2	4280296	8 in / 20.3cm	Strip, Wear	
3	5251014	6	Bolt, M10 x 30	
4	1001118972	4	Nut, M10 x 1.5	
5	1001169955	1	Plate, Valve Cover	
6	1001182250	1	Plate, Cover	

FIGURE 1-22. TOW BAR INSTALLATION

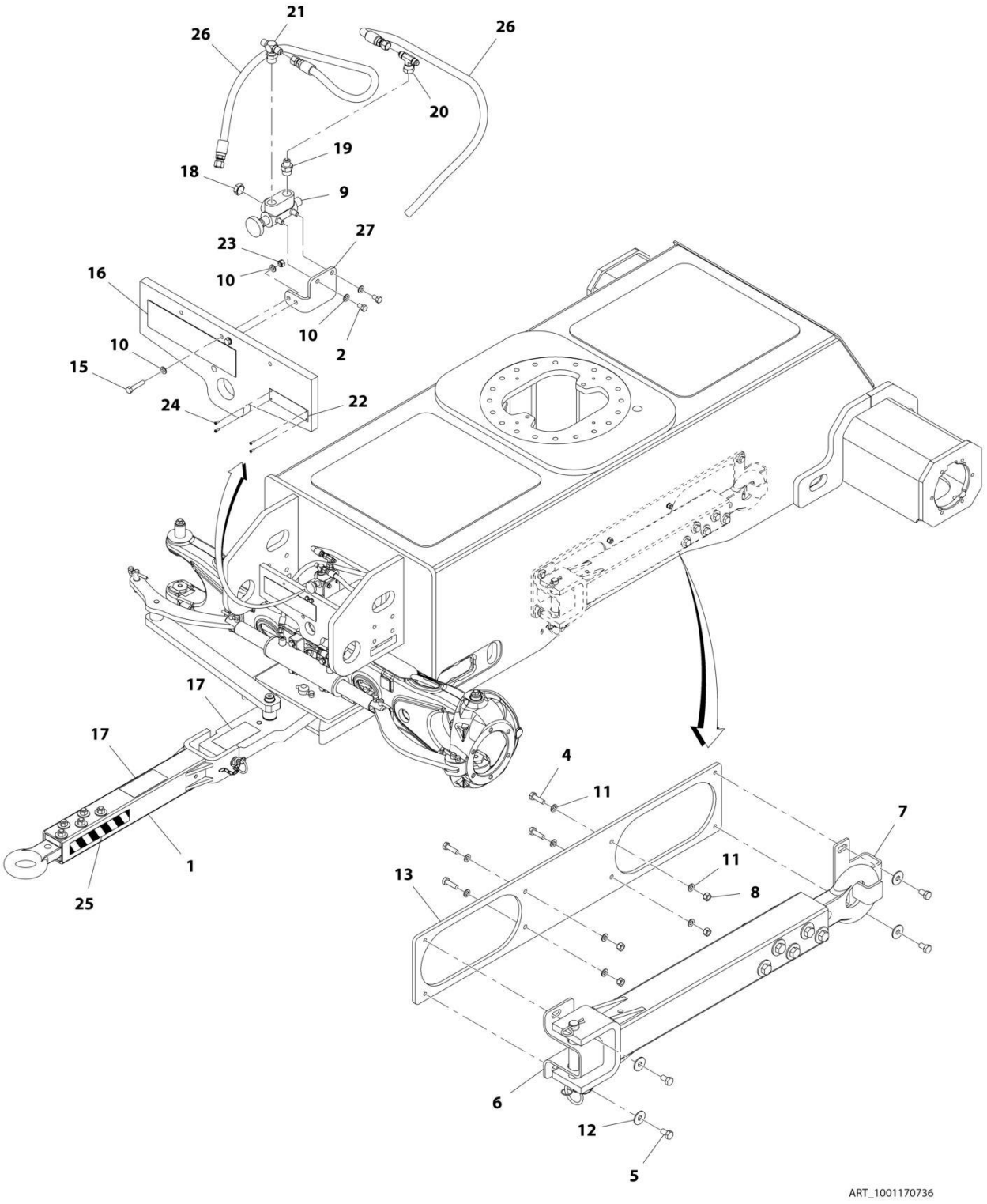

FIGURE 1-22. TOW BAR INSTALLATION

ITEM	PART NUMBER	QTY	DESCRIPTION	REV
	1001170736	Ref	TOW BAR INSTALLATION	D
1	0363019	1	Tow Bar Assembly (See TOW BAR ASSEMBLY for Breakdown)	
2	0641504	2	Bolt, 5/16 x 1/2	
4	0761015	4	Bolt, M10 x 35 **(SN 0300203771 through 0300217915)**	
4	0641612	4	Bolt, 3/8 x 1-1/2 **(SN 0300217916 through 0300272360, Except SN 0300272174 through 0300272184)**	
5	0761210	4	Bolt, M12 x 20	
6	0902733	1	Bracket, Storage (Front)	
7	0902734	1	Bracket, Storage (Rear)	
8	3291005	4	Nut, Lock M10 x 1.5 **(SN 0300203771 through 0300217915)**	
8	3311605	4	Nut, 3/8 **(SN 0300217916 through 0300272360, Except SN 0300272174 through 0300272184)**	
9	4640261	1	Steer/Tow Select Valve	
10	4811900	6	Washer, M8	
11	4812000	8	Washer, M10 **(SN 0300203771 through 0300217915)**	
11	4891600	8	Washer, 3/8 **(SN 0300217916 through 0300272360, Except SN 0300272174 through 0300272184)**	
12	4812102	4	Washer, M12	
13	1001166478	1	Plate, Tow Bar Mount	
15	0760816	2	Bolt, M8 x 40	
16	1702968	1	Decal - Towing Instructions	
17	1704578	3	Decal - Crushing	
18	2220238	1	Plug ORB	
19	2220372	1	Fitting, Straight JIC/ORB	
20	2220579	1	Fitting, Tee JIC/FSJIC/JIC	
21	2221052	1	Fitting, Tee JIC/ORB/JIC	
22	3250872	1	Nameplate, Steer/Tow Select Valve	
23	3290805	2	Nut, Lock M8 x 1.25	
24	3820001	4	Rivet	
25	4420051	48 in /1.21m	Tape, Safety	
26	1001181913	2	Hose	
27	1001182155	1	Bracket, Valve Mounting	

FIGURE 1-23. TOW BAR ASSEMBLY

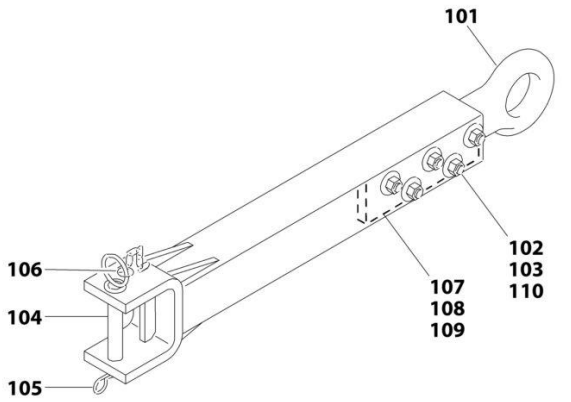

FIGURE 1-23. TOW BAR ASSEMBLY

ITEM	PART NUMBER	QTY	DESCRIPTION	REV
	0363019	Ref	TOW BAR ASSEMBLY	B
101	0360406	1	Pintle, Draw Eye	
102	0682040	5	Bolt 5/8 x 5	
103	3312005	5	Nut 5/8	
104	3420352	1	Pin, Towing	
105	3420372	1	Hairpin	
106	3760170	1	Ring, Split	
107	4070450	2	Shim (.07)	
108	4070560	2	Shim (.88)	
109	4070561	2	Shim (.12)	
110	4752000	10	Washer 5/8	

FIGURE 1-24. LP TANK BRACKETS INSTALLATION

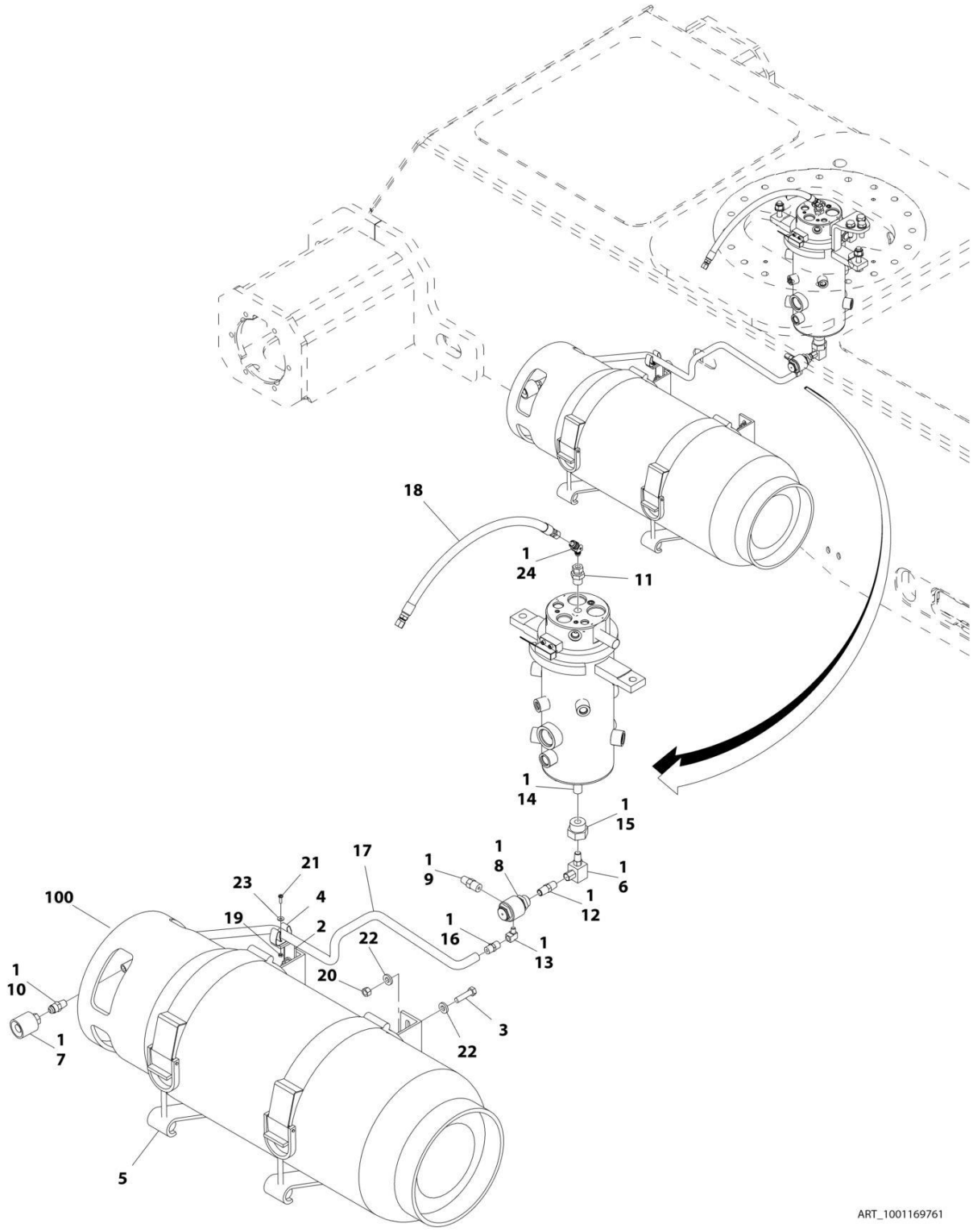

FIGURE 1-24. LP TANK BRACKETS INSTALLATION

ITEM	PART NUMBER	QTY	DESCRIPTION	REV
	1001169761	Ref	LP TANK BRACKETS INSTALLATION	E
1	0100020	AR	Sealant, Pipe	
2	0181949	1	Angle, Support	
4	1320218	1	Clamp	
5	1320220	1	Clamp	
6	2180125	1	Fitting, Swivel 90	
7	2180387	1	Fitting, Straight	
8	2180388	1	Fitting, Bulkhead	
9	2180389	1	Valve, Relief	
10	2180418	1	Fitting, Straight	
11	2220005	1	Fitting, Straight	
12	2220261	1	Fitting, Nipple	
13	2220648	1	Fitting, 90 FNPTF/NPTF	
14	2221018	1	Nipple, Pipe	
15	2221019	1	Fitting, Reducer	
16	2221024	1	Fitting, Nipple	
17	2720144	1	Hose	
18	2720392	1	Hose	
19	3290401	1	Nut, M4 x 0.7	
21	3900332	1	Screw, Special M4 x 14	
23	1001091102	1	Washer	
24	1001190804	1	Fitting, 45 **(SN 0300203771 through 0300249768, SN E300000100 through E300006128)**	
24	1001239802	1	Fitting, 45 **(SN 0300249769 through 0300272360, SN E300006129 through E300007988, Except SN 0300272174 through 0300272184, Excluding E300007847)**	
25	3311601	4	Nut, 3/8	
26	4891600	8	Washer, 3/8 Hardened	
27	0641612	4	Bolt, 3/8 x 1-1/2	
100	4400275	1	Tank, LP 43.5 Lbs (Aluminum)	

SECTION 2 - TURNTABLE

FIGURE 2-1. CONTROL VALVES INSTALLATION - 400S

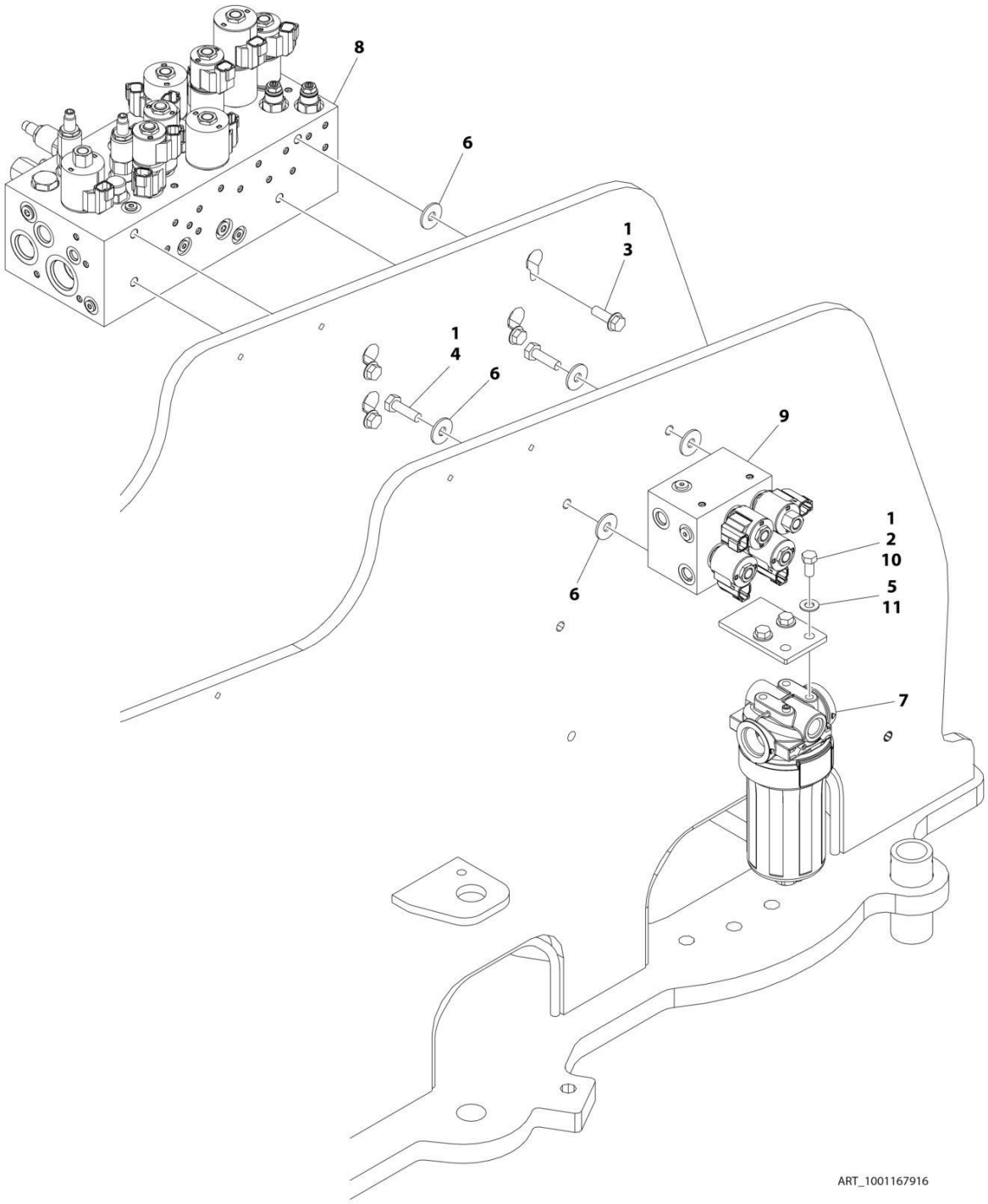

FIGURE 2-1. CONTROL VALVES INSTALLATION - 400S

ITEM	PART NUMBER	QTY	DESCRIPTION	REV
	1001167916	Ref	CONTROL VALVES INSTALLATION - 400S	F
1	0100011	AR	Compound, Locking	
2	0641606	AR	Bolt 3/8 x 3/4	
3	5251014	4	Bolt M10 x 30	
4	0761015	2	Bolt M10 x 35	
5	4711600	AR	Washer 3/8	
6	4812002	8	Washer M10	
7	1001102987	1	Filter, Charge Pump **(SN 0300203771 through 0300237275, SN E300000100 through E300004969, SN 1300007289 through 1300007393)**	
7	70010383	1	Element, Filter (Includes O-Ring)	
7	1001208874	1	Filter, Charge Pump **(SN 0300237276 through 0300272360, SN E300004970 through E300007988, Except SN 0300272174 through 0300272184, Excluding E300007847)**	
8	1001162531	1	Main Valve Assembly (See MAIN VALVE ASSEMBLY - 400S for Breakdown)	
9	1001162538	1	Axle Valve Assembly (See AXLE VALVE ASSEMBLY for Breakdown)	
10	0761010	AR	Bolt M10 x 20	
11	4812000	AR	Washer M10	

FIGURE 2-2. CONTROL VALVES INSTALLATION - 460SJ

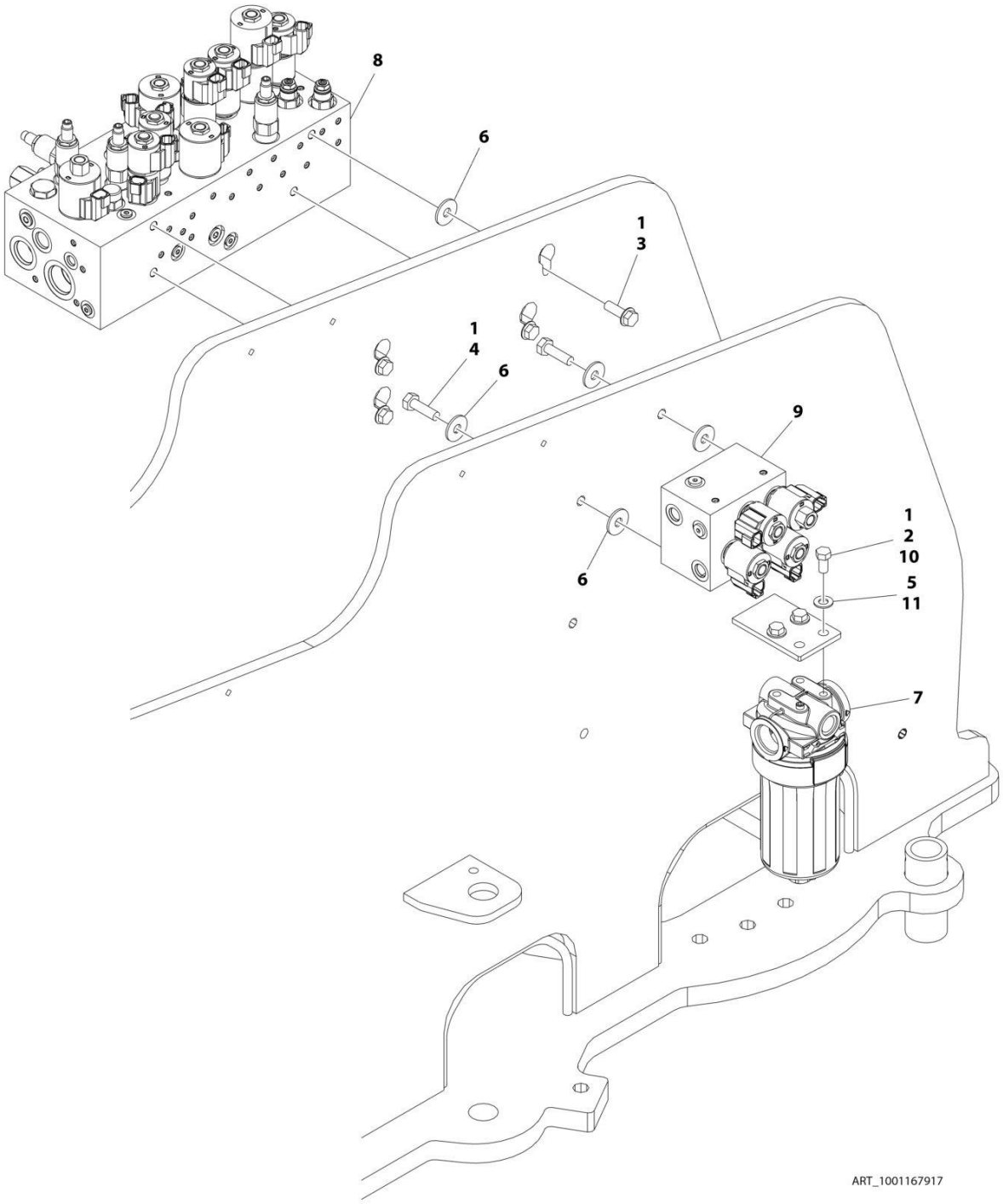

FIGURE 2-2. CONTROL VALVES INSTALLATION - 460SJ

ITEM	PART NUMBER	QTY	DESCRIPTION	REV
	1001167917	Ref	CONTROL VALVES INSTALLATION - 460SJ	F
1	0100011	AR	Compound, Locking	
2	0641606	AR	Bolt 3/8 x 3/4	
3	5251014	4	Bolt M10 x 30	
4	0761015	2	Bolt M10 x 35	
5	4711600	AR	Washer 3/8	
6	4812002	8	Washer M10	
7	1001102987	1	Filter, Charge Pump **(SN 0300203771 through 0300237275, SN E300000100 through E300004969, SN 1300007289 through 1300007393)**	
7	70010383	1	Element, Filter (Includes O-Ring)	
7	1001208874	1	Filter, Charge Pump **(SN 0300237276 through 0300272360, SN E300004970 through E300007988, Except SN 0300272174 through 0300272184, Excluding E300007847)**	
8	1001162532	1	Main Valve Assembly (See MAIN VALVE ASSEMBLY - 460SJ for Breakdown)	
9	1001162538	1	Axle Valve Assembly (See AXLE VALVE ASSEMBLY for Breakdown)	
10	0761010	AR	Bolt M10 x 20	
11	4812000	AR	Washer M10	

FIGURE 2-3. MAIN VALVE ASSEMBLY - 400S

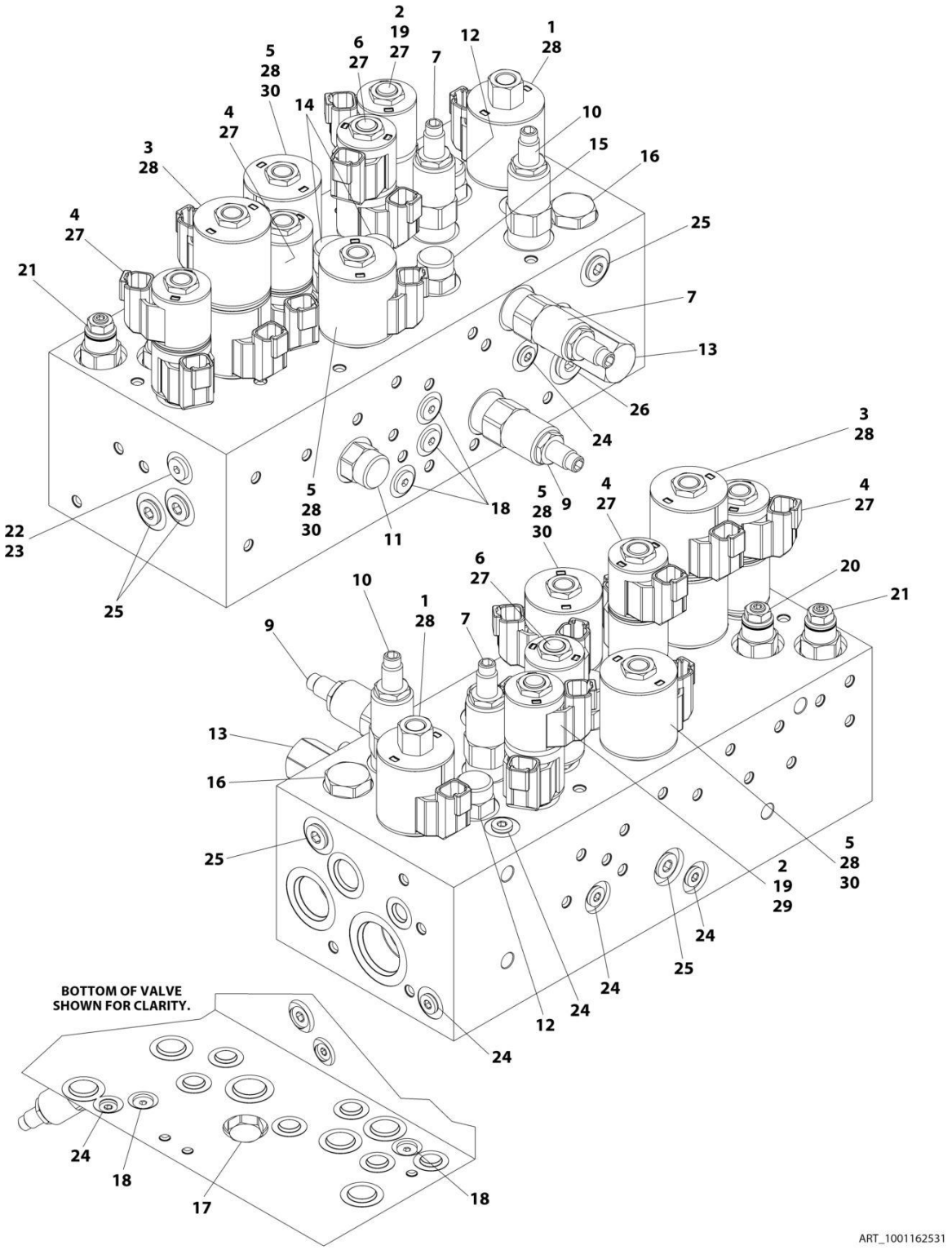

FIGURE 2-3. MAIN VALVE ASSEMBLY - 400S

ITEM	PART NUMBER	QTY	DESCRIPTION	REV
	1001162531	Ref	MAIN VALVE ASSEMBLY - 400S	F
1	70005069	1	Cartridge, Solenoid Less Coil (Main Dump)	
1	7022399	1	Seal Kit - 70005069 Valve	
1	70003977	1	Nut, Coil	
2	70005217	1	Cartridge, Solenoid Less Coil (Steer)	
2	70005071	1	Seal Kit - 70005217 Valve	
2	7022390	1	Nut, Coil	
3	70005072	1	Cartridge, Solenoid Less Coil (Tele)	
3	70005073	1	Seal Kit - 70005072 Valve	
3	7022390	1	Nut, Coil	
3	70003024	1	Spacer, Coil	
4	70005074	2	Cartridge, Solenoid Valve Less Coil (Platform Level and Rotate)	
4	70005075	2	Seal Kit - 70005074 Valve	
4	7022390	2	Nut, Coil	
4	70003023	2	Spacer, Coil	
5	70005076	2	Cartridge, Solenoid Less Coil (Lift Up and Flow Control)	
5	7022399	2	Seal Kit - 70005076 Valve	
5	7022390	2	Nut, Coil	
6	70005077	1	Cartridge, Solenoid Valve Less Coil (Swing)	
6	70005071	1	Seal Kit - 70005077 Valve	
6	7022390	1	Nut, Coil	
6	70003023	1	Spacer, Coil	
7	70005078	2	Cartridge, Relief Valve	
7	7023936	2	Seal Kit - 70005078 Valve	
9	70005079	1	Cartridge, Relief Valve	
9	7023936	1	Seal Kit - 70005079 Valve	
10	70005080	1	Cartridge, Relief Valve	
10	7022399	1	Seal Kit - 70005080 Valve	
11	70005081	1	Cartridge, Valve	
11	70005082	1	Seal Kit - 70005081 Valve	
12	70005218	1	Cartridge, Valve	
12	70005082	1	Seal Kit - 70005218 Valve	
13	70005084	1	Cartridge, Valve	
13	70005085	1	Seal Kit - 70005084 Valve	
14	70005086	2	Cartridge, Valve	
14	70005087	2	Seal Kit - 70005086 Valve	
15	70005088	1	Cartridge, Valve	
15	7023900	1	Seal Kit - 70005088 Valve	
16	70003408	1	Cartridge, Valve	
16	7022399	1	Seal Kit - 70005100 Valve	
17	70005089	1	Cartridge, Check Valve	
17	7023936	1	Seal Kit - 70005089 Valve	
18	70005090	5	Cartridge, Check Valve	
18	70005092	5	Seal Kit - 70005090 Valve	
19	70002974	1	Disc, Check Valve	
20	70005108	1	Cartridge, Valve	
20	2900770	1	Seal Kit - 70005108 Valve	
21	70005109	1	Cartridge, Valve	
21	2900770	1	Seal Kit - 70005109 Valve	
22	70005091	1	Orifice	

SECTION 2 - TURNTABLE

ITEM	PART NUMBER	QTY	DESCRIPTION	REV
23	2220883	1	Plug, O-Ring #4	
24	91164059	6	Plug	
25	91164079	6	Plug	
26	91164057	1	Plug	
27	70002386	6	Coil	
28	70003788	5	Coil	
29	70005219	2	Coil	
30	70005724	2	Lockdown Kit	

FIGURE 2-4. MAIN VALVE ASSEMBLY - 460SJ

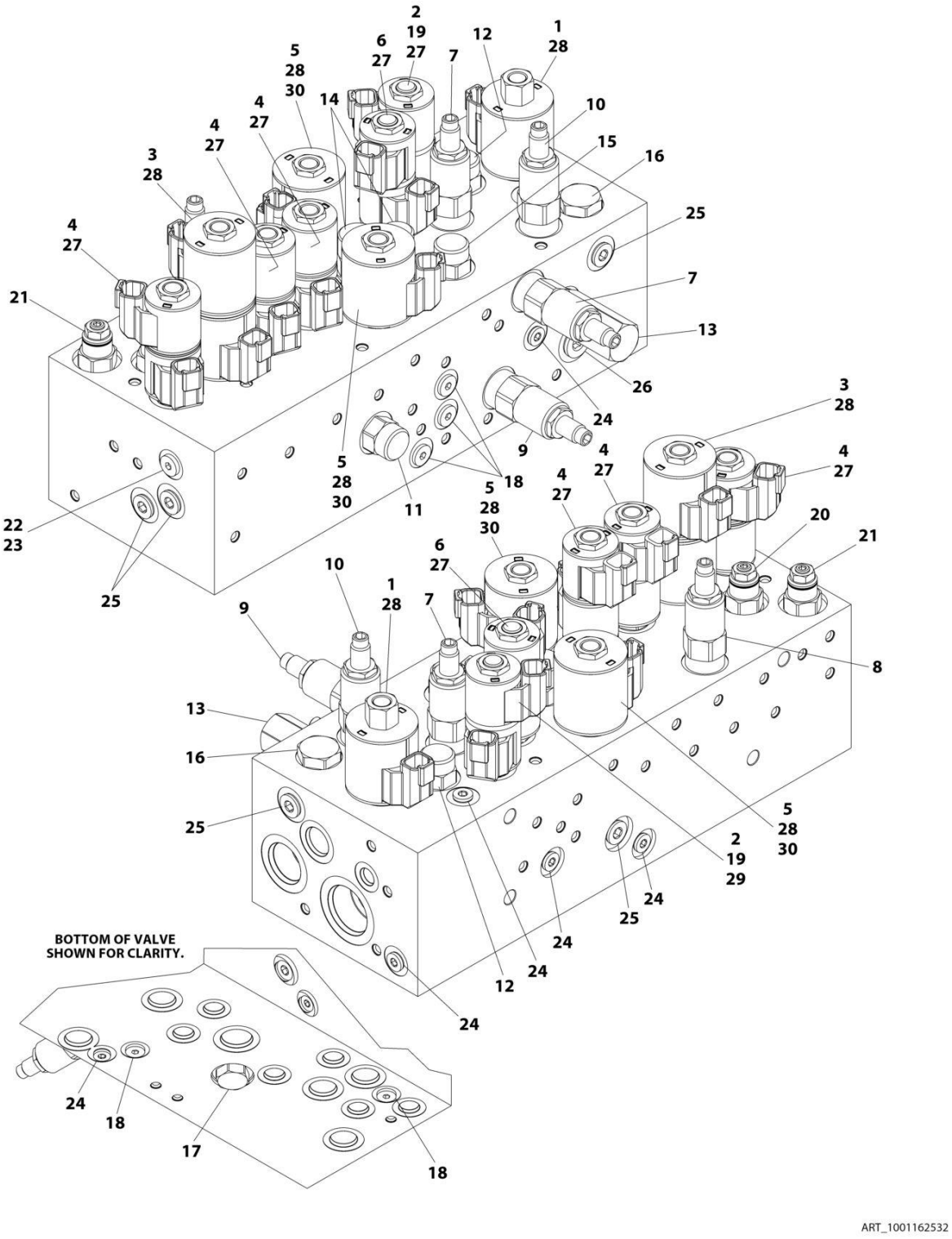

FIGURE 2-4. MAIN VALVE ASSEMBLY - 460SJ

ITEM	PART NUMBER	QTY	DESCRIPTION	REV
	1001162532	Ref	MAIN VALVE ASSEMBLY - 460SJ	F
1	70005069	1	Cartridge, Solenoid Less Coil (Main Dump)	
1	7022399	1	Seal Kit - 70005069 Valve	
1	70003977	1	Nut, Coil	
2	70005217	1	Cartridge, Solenoid Less Coil (Steer)	
2	70005071	1	Seal Kit - 70005217 Valve	
2	7022390	1	Nut, Coil	
3	70005072	1	Cartridge, Solenoid Less Coil (Tele)	
3	70005073	1	Seal Kit - 70005072 Valve	
3	7022390	1	Nut, Coil	
3	70003024	1	Spacer, Coil	
4	70005074	3	Cartridge, Solenoid Valve Less Coil (Platform Level, Platform Rotate and Jib Lift))	
4	70005075	3	Seal Kit - 70005074 Valve	
4	7022390	3	Nut, Coil	
4	70003023	3	Spacer, Coil	
5	70005076	2	Cartridge, Solenoid Less Coil (Lift Up and Flow Control)	
5	7022399	2	Seal Kit - 70005076 Valve	
5	7022390	2	Nut, Coil	
6	70005077	1	Cartridge, Solenoid Valve Less Coil (Swing)	
6	70005071	1	Seal Kit - 70005077 Valve	
6	7022390	1	Nut, Coil	
6	70003023	1	Spacer, Coil	
7	70005078	2	Cartridge, Relief Valve	
7	7023936	2	Seal Kit - 70005078 Valve	
8	70005093	1	Cartridge, Valve	
8	7023936	1	Seal Kit - 70005093 Valve	
9	70005079	1	Cartridge, Relief Valve	
9	7023936	1	Seal Kit - 70005079 Valve	
10	70005080	1	Cartridge, Relief Valve	
10	7022399	1	Seal Kit - 70005080 Valve	
11	70005081	1	Cartridge, Valve	
11	70005082	1	Seal Kit - 70005081 Valve	
12	70005218	1	Cartridge, Valve	
12	70005082	1	Seal Kit - 70005218 Valve	
13	70005084	1	Cartridge, Valve	
13	70005085	1	Seal Kit - 70005084 Valve	
14	70005086	2	Cartridge, Valve	
14	70005087	2	Seal Kit - 70005086 Valve	
15	70005088	1	Cartridge, Valve	
15	7023900	1	Seal Kit - 70005088 Valve	
16	70003408	1	Cartridge, Valve	
16	7022399	1	Seal Kit - 70005100 Valve	
17	70005089	1	Cartridge, Check Valve	
17	7023936	1	Seal Kit - 70005089 Valve	
18	70005090	5	Cartridge, Check Valve	
18	70005092	5	Seal Kit - 70005090 Valve	
19	70002974	1	Disc, Check Valve	
20	70005108	1	Cartridge, Valve	
20	2900770	1	Seal Kit - 70005108 Valve	

SECTION 2 - TURNTABLE

ITEM	PART NUMBER	QTY	DESCRIPTION	REV
21	70005109	1	Cartridge, Valve	
21	2900770	1	Seal Kit - 70005109 Valve	
22	70005091	1	Orifice	
23	2220883	1	Plug, O-Ring #4	
24	91164059	6	Plug	
25	91164079	6	Plug	
26	91164057	1	Plug	
27	70002386	8	Coil	
28	70003788	5	Coil	
29	70005219	2	Coil	
30	70005724	2	Lockdown Kit	

FIGURE 2-5. AXLE VALVE ASSEMBLY

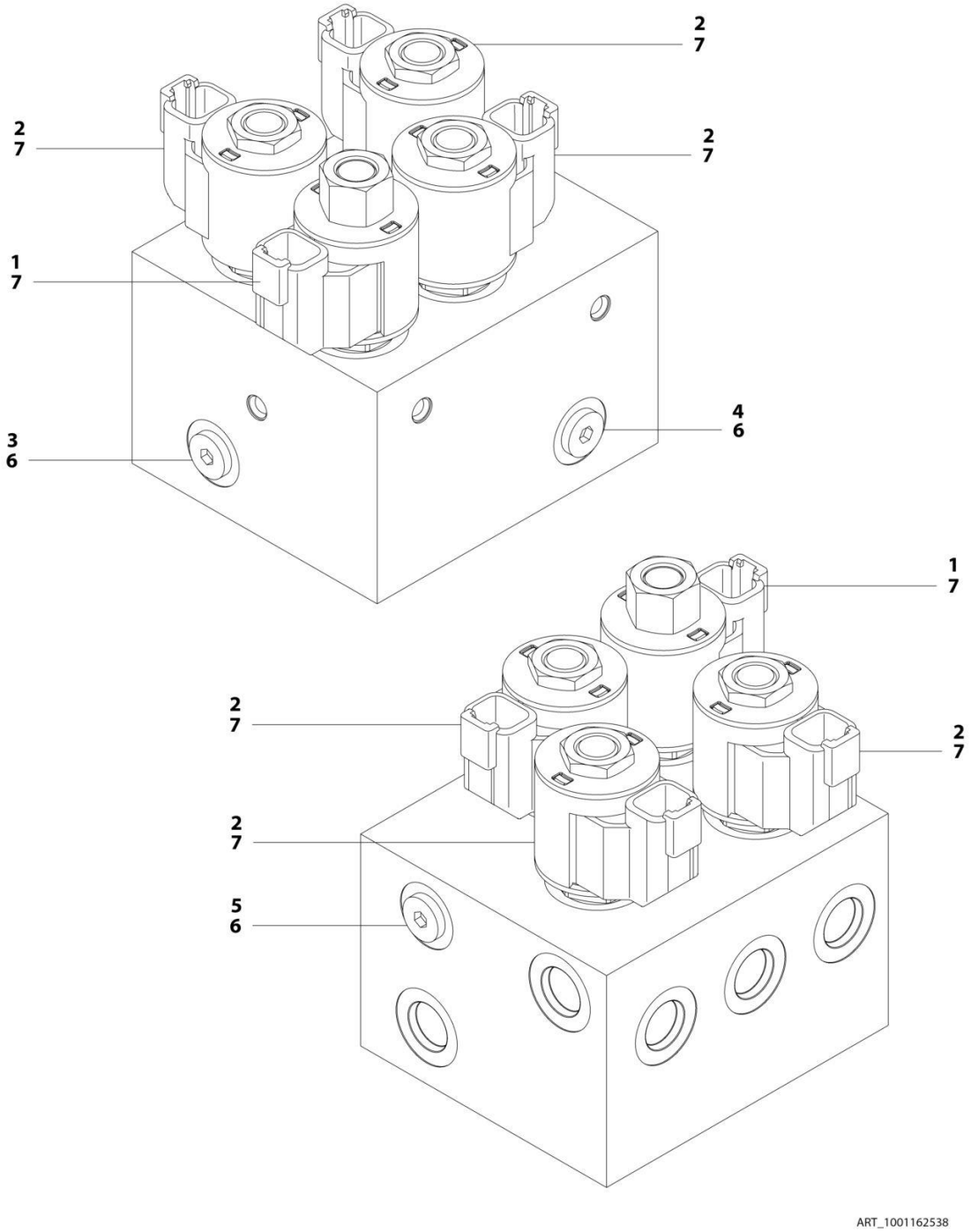

FIGURE 2-5. AXLE VALVE ASSEMBLY

ITEM	PART NUMBER	QTY	DESCRIPTION	REV
	1001162538	Ref	AXLE VALVE ASSEMBLY	D
1	7017410	1	Cartridge, Solenoid Valve Less Coil (Secondary Axle Release)	
1	7012967	1	Seal Kit - 7017410 Valve	
2	7012941	3	Cartridge, Solenoid Valve Less Coil (Brake Release, Primary Axle Release and 2 Speed)	
2	7010543	3	Seal Kit - 7012941 Valve	
3	70004883	1	Orifice	
4	70004884	1	Orifice	
5	70002063	1	Orifice	
6	2220883	3	Plug, O-Ring #4	
7	70002386	4	Coil	

FIGURE 2-6. SWING DRIVE INSTALLATION (SN 0300203771 through 0300264434, SN E300000100 through E300007431)

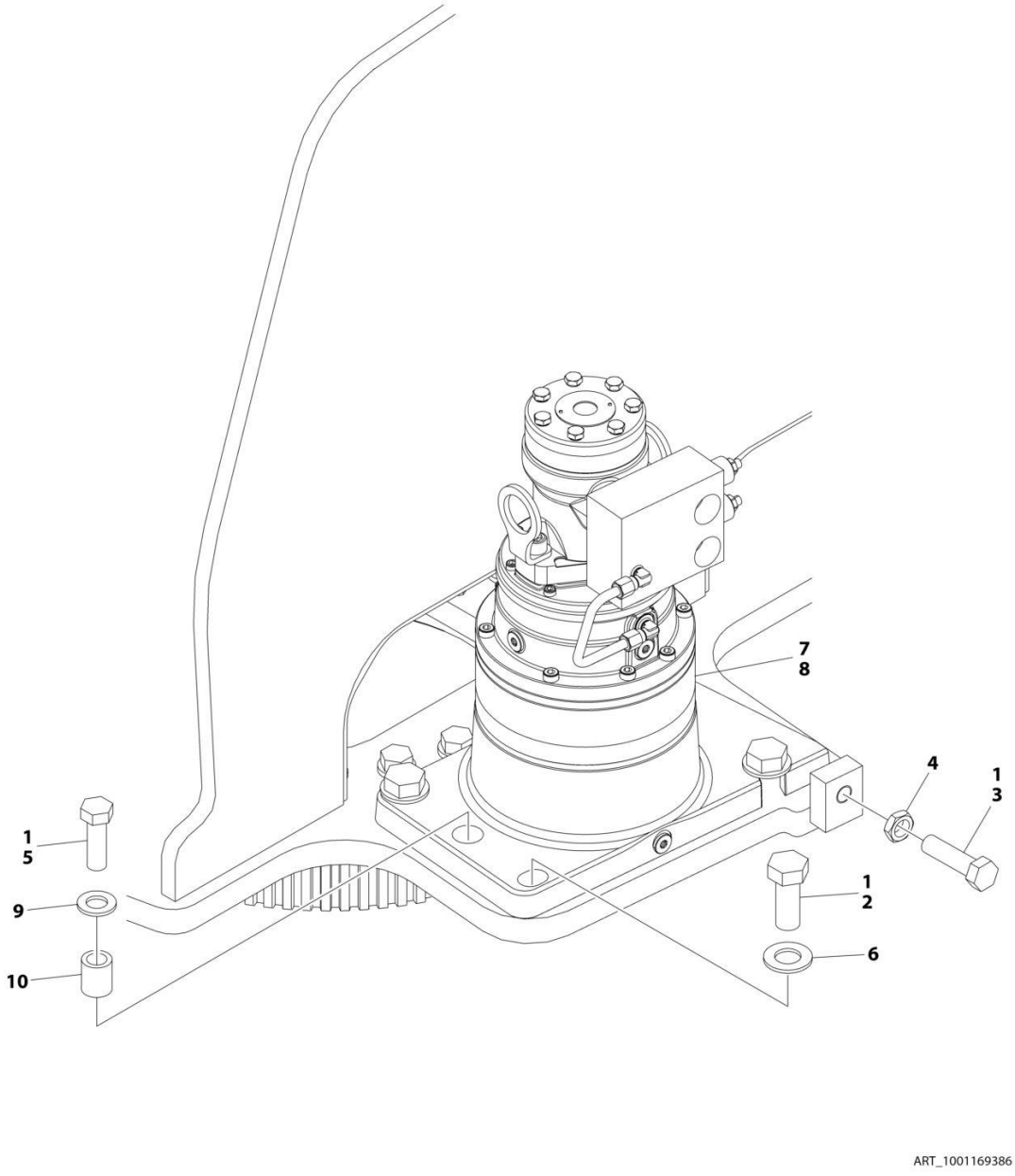

FIGURE 2-6. SWING DRIVE INSTALLATION (SN 0300203771 through 0300264434, SN E300000100 through E300007431)

ITEM	PART NUMBER	QTY	DESCRIPTION	REV
	1001169386	Ref	SWING DRIVE INSTALLATION	D
1	0100019	AR	Compound, Locking	
2	0772018	4	Bolt M20 x 50 Grade 10.9	
3	0761620	1	Bolt M16 x 60	
4	3291602	1	Nut M16	
5	0701618	1	Bolt M16 x 50	
6	5242000	4	Washer M20	
7	1001190964	1	Shim	
8	1001164942	1	Swing Hub/Motor Assembly (See SWING HUB/MOTOR ASSEMBLY for Breakdown)	
9	5241600	1	Washer M16	
10	1001134543	1	Sleeve, Spacer	

FIGURE 2-7. SWING HUB/MOTOR ASSEMBLY (SN 0300203771 through 0300264434, SN E300000100 through E300007431)

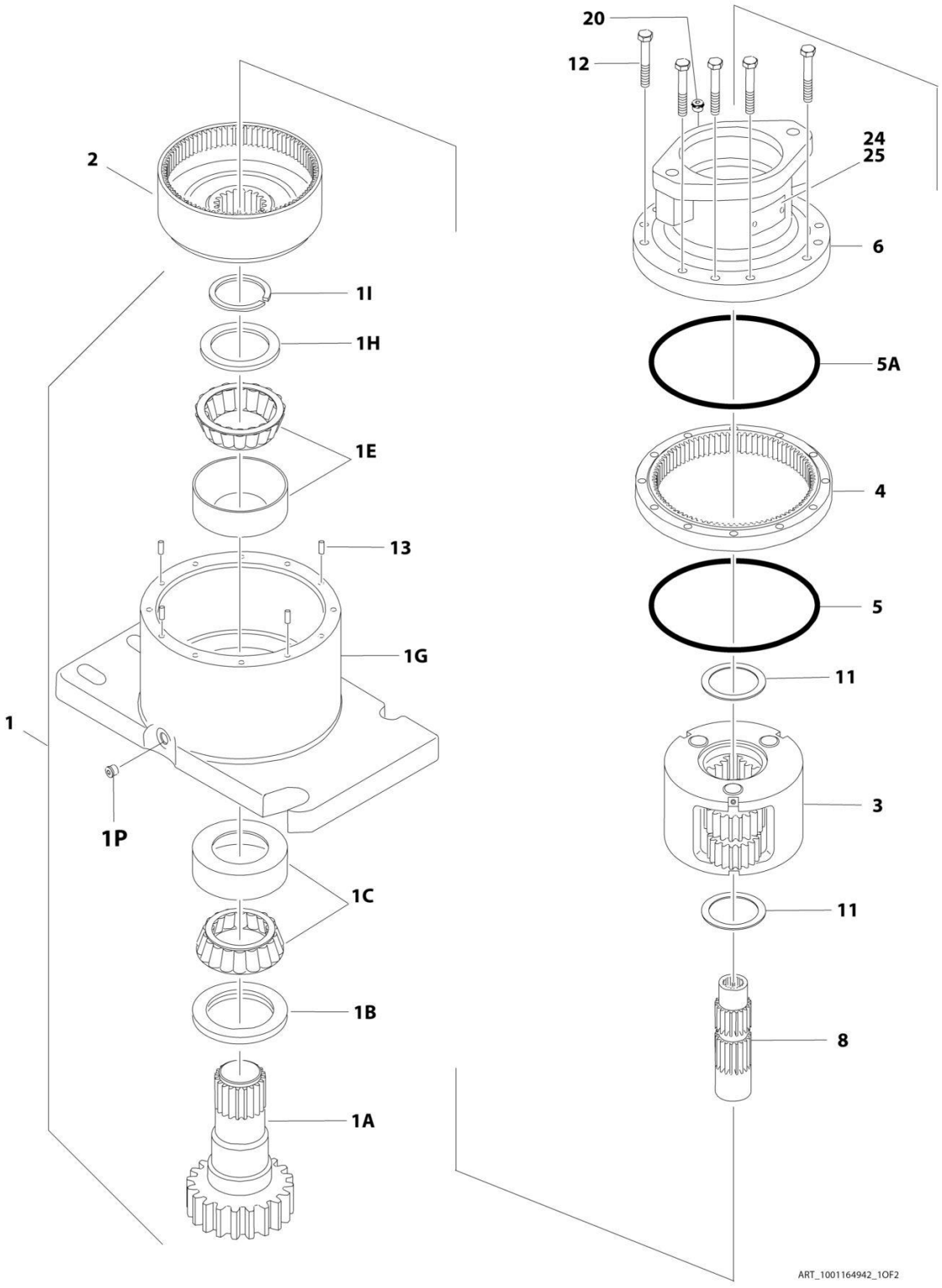

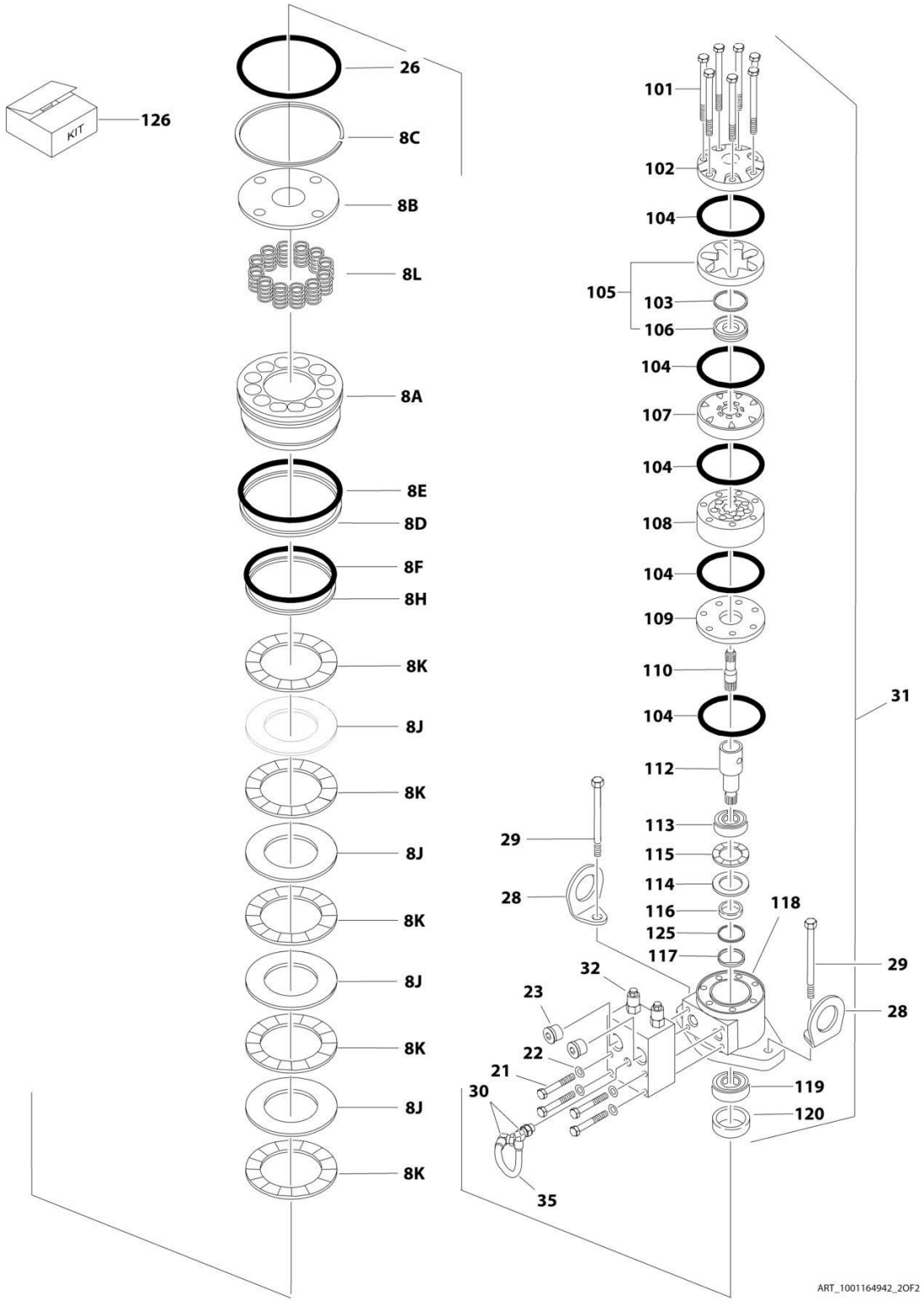
KIT
126
26
8C
8B
8L
8A
8E
8D
8F
8H
8K
8J
8K
8J
8K
8J
8K
8J
8K
101
102
104
105
103
106
104
107
104
108
104
109
110
104
112
113
115
114
116
125
117
118
29
28
29
28
32
23
22
21
30
35
119
120
31
ART_1001164942_2OF2

FIGURE 2-7. SWING HUB/MOTOR ASSEMBLY (SN 0300203771 through 0300264434, SN E300000100 through E300007431)

ITEM	PART NUMBER	QTY	DESCRIPTION	REV
	1001164942	Ref	SWING HUB/MOTOR ASSEMBLY	B
1	See Note	NSS	Housing/Shaft Assembly (Note: Not Available - Purchase Complete Swing Motor/Hub Assembly)	
1A	70005204	1	Shaft, Output	
1B	7000228	1	Seal, Lip	
1C	7000255	1	Bearing Kit (Includes Cup and Cone)	
1E	7000257	1	Bearing Kit (Includes Cup and Cone)	
1G	See Note	NSS	Housing (Note: Not Available for Purchase)	
1H	7007633	1	Thrustwasher	
1I	7000229	1	Ring, Retaining	
1P	7017072	1	Plug, Pipe	
2	7000246	1	Gear, Internal	
3	7000247	1	Carrier Assembly	
3A	7001931	1	Carrier	
3B	7001985	6	Washer, Tanged	
3C	7001909	96	Bearing, Needle	
3D	7000263	3	Thrustwasher	
3E	7001911	3	Shaft, Planet	
3F	7001912	3	Gear, Cluster	
3G	7010474	3	Roll Pin	
4	7000248	1	Gear, Ring	
5	7000230	1	O-Ring (Black)	
5A	7017070	1	O-Ring (White)	
6	See Note	NSS	Housing, Brake (Note: Not Available for Purchase)	
7	70005203	1	Gear, Sun	
8		Ref	Brake Components	
8A	70004037	1	Piston, Brake	
8B	7024743	1	Plate, Pressure	
8C	70004039	1	Ring, Retaining	
8D	70004041	1	O-Ring	
8E	70004044	1	Ring, Back-up	
8F	70004042	1	O-Ring	
8H	70004043	1	Ring, Back-up	
8J	See Note	NSS	Rotor, Brake (Note: Use p/n 70002085)	
8K	See Note	NSS	Stator, Brake (Note: Use p/n 70002085)	
8L	70002066	7	Spring, Brake	
11	7000253	2	Thrustwasher	
12	7000217	12	Bolt, 5/16 x 2-1/4 Grade 8	
13	7017080	4	Pin, Dowel	
20	7017072	1	Plug, Pipe	
21	7024704	4	Bolt 5/16 x 2 Grade 8	
22	70004045	4	Lockwasher	
23	7017023	2	Plug, Pipe	
24	See Note	NSS	Plate, ID (Note: Not Available for Purchase)	
25	See Note	NSS	Rivet	
26	7024763	1	O-Ring	
28	See Note	NSS	Lug, Lifting (Note: Not Available for Purchase)	
29	70004040	2	Bolt, 1/2 x 1-1/2 Grade 8	
30	7017085	2	Elbow	

ITEM	PART NUMBER	QTY	DESCRIPTION	REV
31	70004048	1	Motor Assembly (See Items 101-126 for Breakdown)	
32	7024784	1	Valve (No Serviceable Parts)	
33	7017082	1	Plug, Pipe (Not Shown)	
35	70004047	1	Tube	
	70004048	Ref	Motor Assembly	
101	See Note	NSS	Bolt (Note: Not Available for Purchase)	
102	See Note	NSS	Cover, End (Note: Not Available for Purchase)	
103	See Note	1	Seal, Commutator (Note: Use p/n 7024389)	
104	See Note	5	Seal, Ring (Note: Use p/n 7024389)	
105	7024453	1	Commutator and Ring Assembly	
106	See Note	1	Ring (Note: Use p/n 7024453)	
107	7024379	1	Manifold	
108	See Note	NSS	Rotor Set (Note: Not Available for Purchase)	
109	7024380	1	Plate, Wear	
110	See Note	NSS	Link, Drive (Note: Not Available for Purchase)	
112	7024458	1	Shaft, Coupling	
113	7024381	1	Bushing, Bronze	
114	7004043	1	Thrustwasher	
115	7004044	1	Bearing, Thrust	
116	See Note	1	Seal, Inner (Note: Use p/n 7024389)	
117	See Note	1	Washer, Back-up (Note: Use p/n 7024389)	
118	See Note	NSS	Housing (Note: Not Available for Purchase)	
119	7024390	1	Bearing	
120	See Note	1	Seal (Note: Use p/n 7024389)	
125	See Note	1	Washer, Back-up (Note: Use p/n 7024389)	
126	7024389	1	Seal Kit, Motor (Includes Items 103, 104, 116, 117, 120 & 125)	

FIGURE 2-8. SWING DRIVE INSTALLATION (SN 0300264434 through 0300272360, SN E300007431 through E300007988)

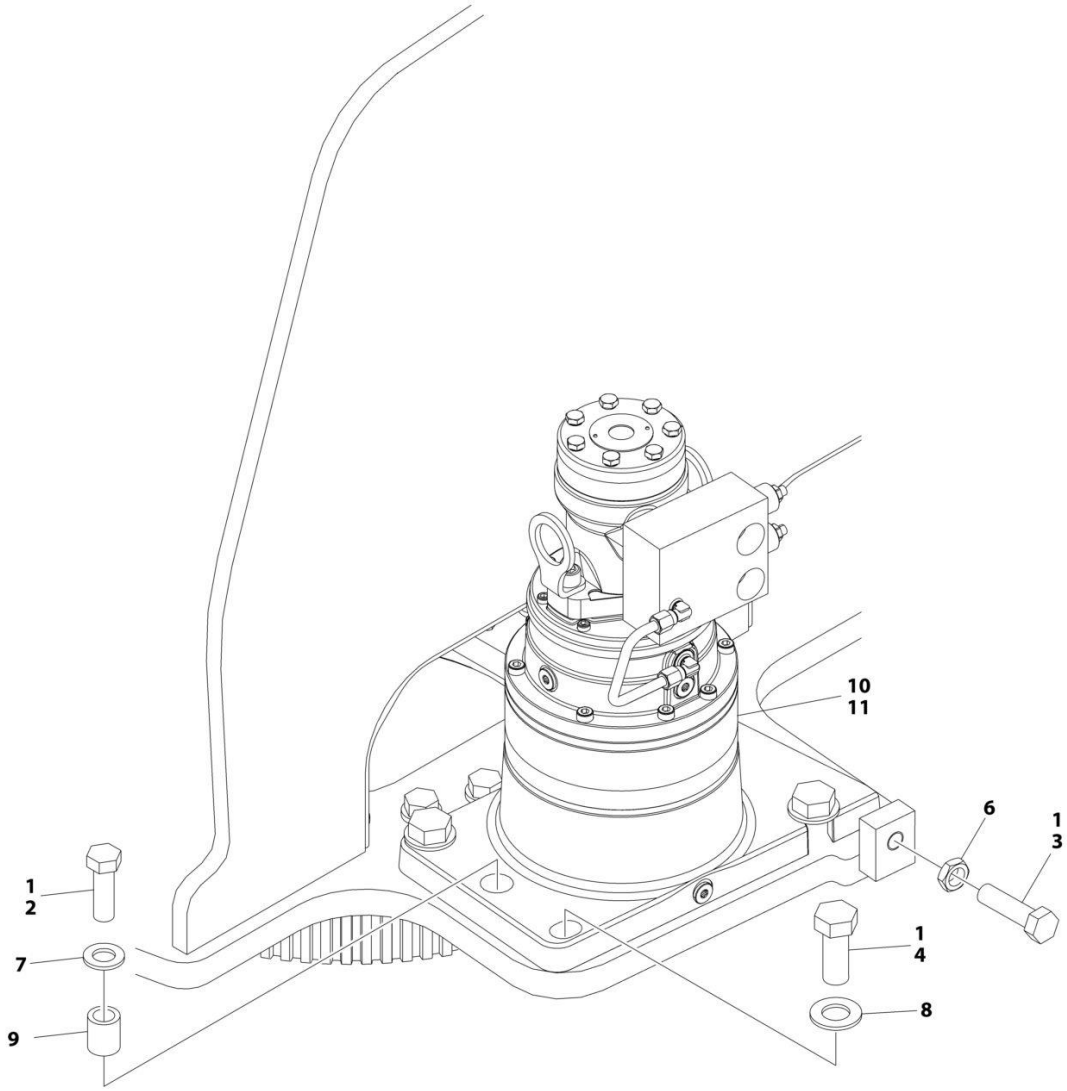

FIGURE 2-8. SWING DRIVE INSTALLATION (SN 0300264434 through 0300272360, SN E300007431 through E300007988)

ITEM	PART NUMBER	QTY	DESCRIPTION	REV
	1001228492	Ref	SWING DRIVE INSTALLATION	C
1	0100019	AR	Compound, Locking	
2	0701618	1	Bolt M16 x 50	
3	0761620	1	Bolt M16 x 60	
4	0772018	4	Bolt M20 x 50 Grade 10.9	
6	3291602	1	Nut M16	
7	5241600	1	Washer M16	
8	5242000	4	Washer M20	
9	1001134543	1	Sleeve, Spacer	
10	4071009	1	Shim	
11	1001228487	1	Swing Hub/Motor Assembly (See Separate Breakdown in this Section)	

FIGURE 2-9. SWING HUB/MOTOR ASSEMBLY (SN 0300264434 through 0300272360, SN E300007431 through E300007988)

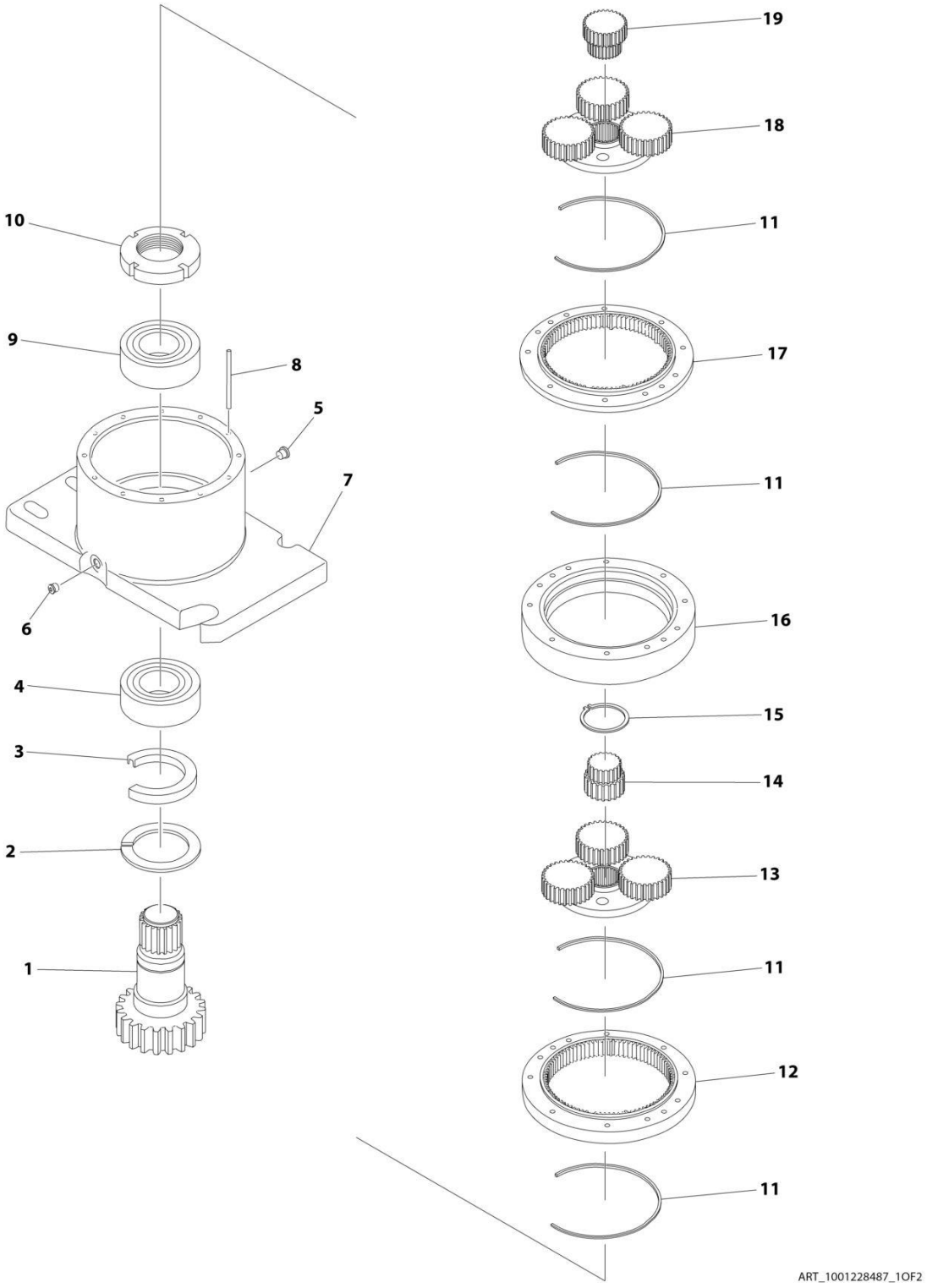

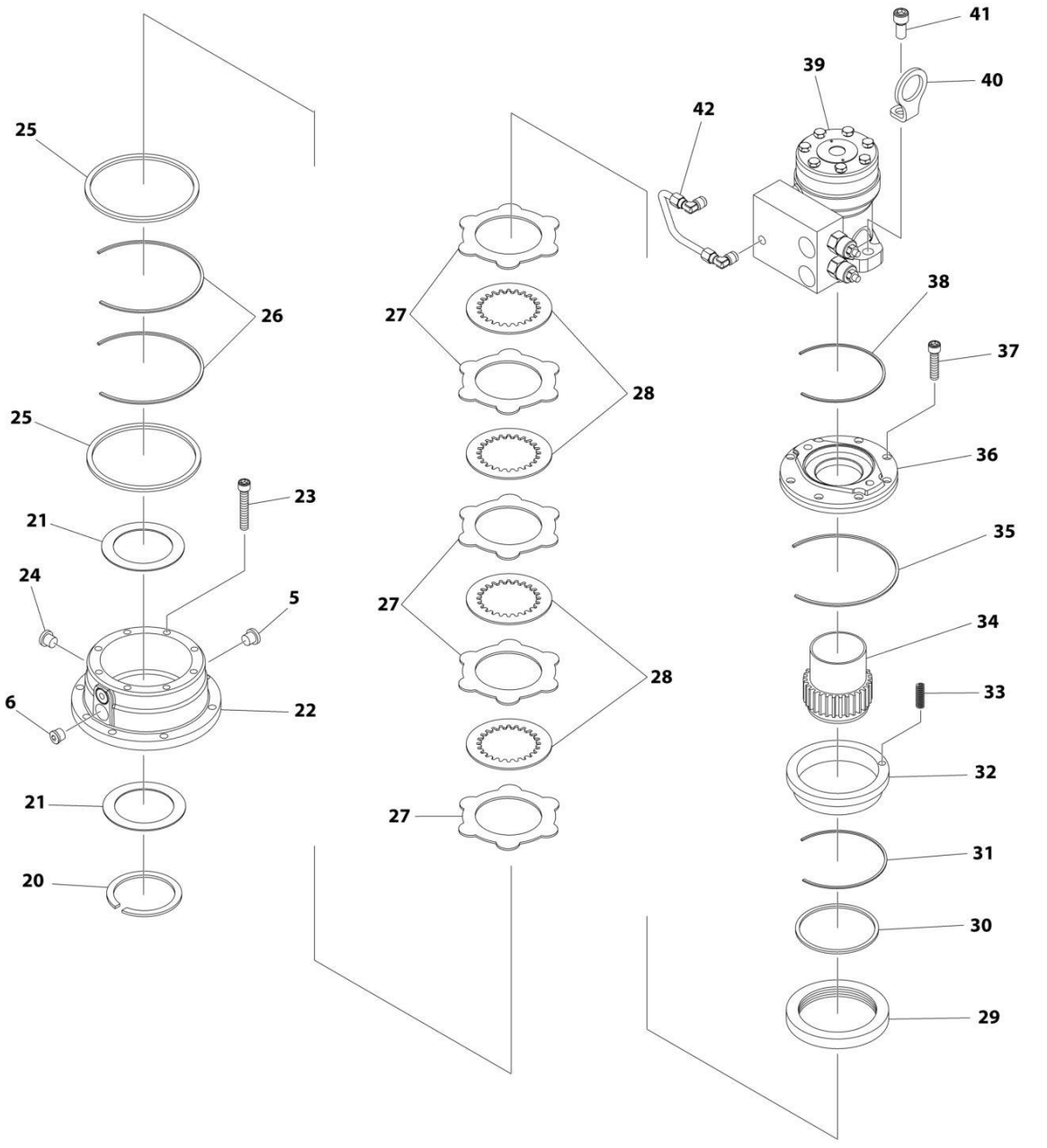

ART_1001228487_2OF2

FIGURE 2-9. SWING HUB/MOTOR ASSEMBLY (SN 0300264434 through 0300272360, SN E300007431 through E300007988)

ITEM	PART NUMBER	QTY	DESCRIPTION	REV
	1001228487	Ref	SWING HUB/MOTOR ASSEMBLY	C
1	70007022	1	Output Shaft	
2	70007023	1	Ring	
3		Ref	Oil Seal	
4	70007024	1	Tapered Roller Bearing	
5	70004469	2	Magnetic Plug with O-Ring	
6	70002057	4	Plug with O-Ring	
7	NSS	1	Output Support	
8	70007025	2	Spring Pin	
9	70007026	1	Tapered Roller Bearing	
10	70007027	1	Ring Nut	
11		Ref	O-Ring	
12	70006990	1	Planetary Ring	
13	70007028	1	Complete Reduction	
14	70007029	1	Pinion	
15	70007030	1	Seeger	
16	70006994	1	Spacer	
17	70004481	1	Planetary Ring	
18	70004482	1	Complete Reduction	
19	70007031	1	Pinion	
20	70006997	1	Ring	
21	70006998	2	Washer	
22	NSS	1	Brake Housing	
23	70007032	8	Screw	
24	70006999	1	Level Oil Plug	
25		Ref	Parbak	
26		Ref	O-Ring	
27		Ref	Iron Disc	
28		Ref	Sintered Disc	
29	70005317	1	Brake Spacer	
30		Ref	Parbak	
31		Ref	O-Ring	
32	70005318	1	Brake Piston	
33		Ref	Brake Spring	
34	70007001	1	Input Shaft	
35		Ref	O-Ring	
36	70007002	1	Cover	
37	70007003	8	Screw	
38		Ref	O-Ring	
39		Ref	Motor with Valve	
40	NSS	2	Vertical Lift Support	
41	70004494	2	Screw	
42	70007004	1	Brake/Valve Adapter	
43	70007046	1	Seal Kit	
44	70007006	1	Kit, Brake Repair	

FIGURE 2-10. TURNTABLE BEARING INSTALLATION

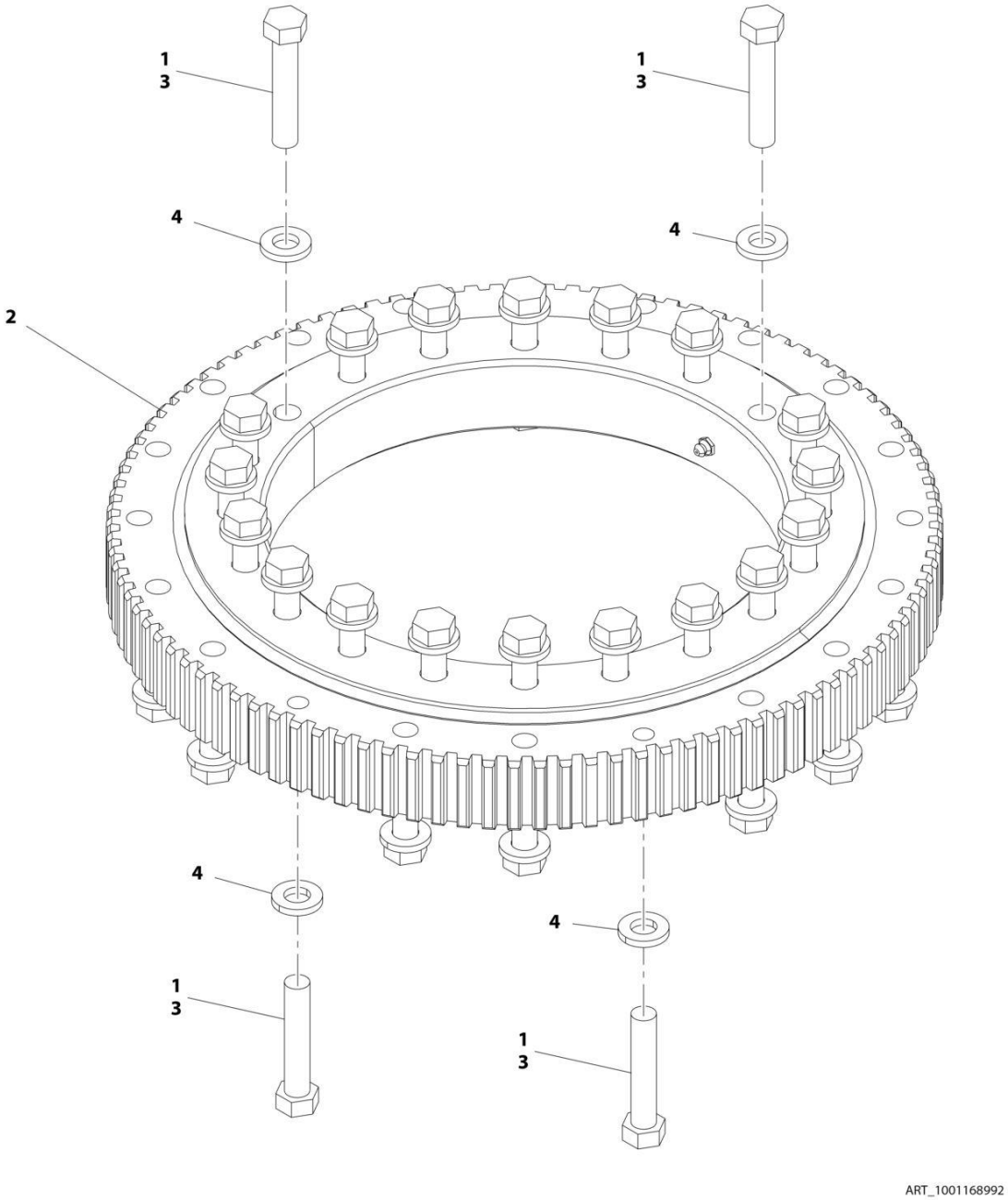

FIGURE 2-10. TURNTABLE BEARING INSTALLATION

ITEM	PART NUMBER	QTY	DESCRIPTION	REV
	1001168992	Ref	TURNTABLE BEARING INSTALLATION	A
1	0100019	AR	Compound, Locking	
2	0440240	1	Bearing, Turntable	
3	0682026	40	Bolt 5/8 x 3-1/4 Grade 8	
4	4892000	40	Washer 5/8	

FIGURE 2-11. BEARING LUBE INSTALLATION

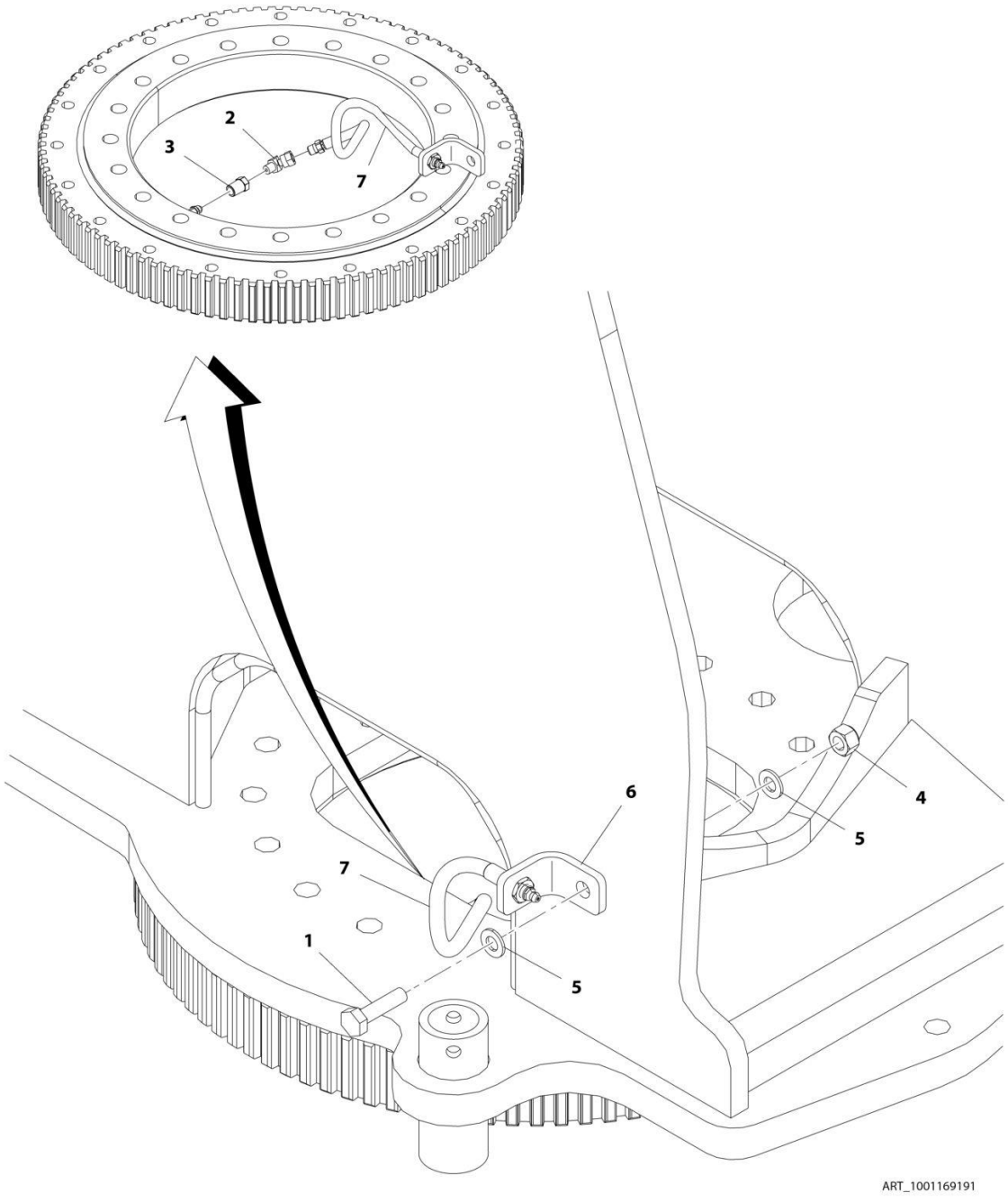

FIGURE 2-11. BEARING LUBE INSTALLATION

ITEM	PART NUMBER	QTY	DESCRIPTION	REV
	1001169191	Ref	BEARING LUBE INSTALLATION	A
1	0761016	1	Bolt M10 x 40	
2	2220124	1	Fitting, 45 1/8NPT	
3	2220273	1	Fitting, Straight FNPTF/NPTF	
4	3291005	1	Nut M10	
5	4812000	2	Washer M10	
6	1001169192	1	Mount, Bulkhead	
7	1001169193	1	Hose	

FIGURE 2-12. TURNTABLE LOCK INSTALLATION

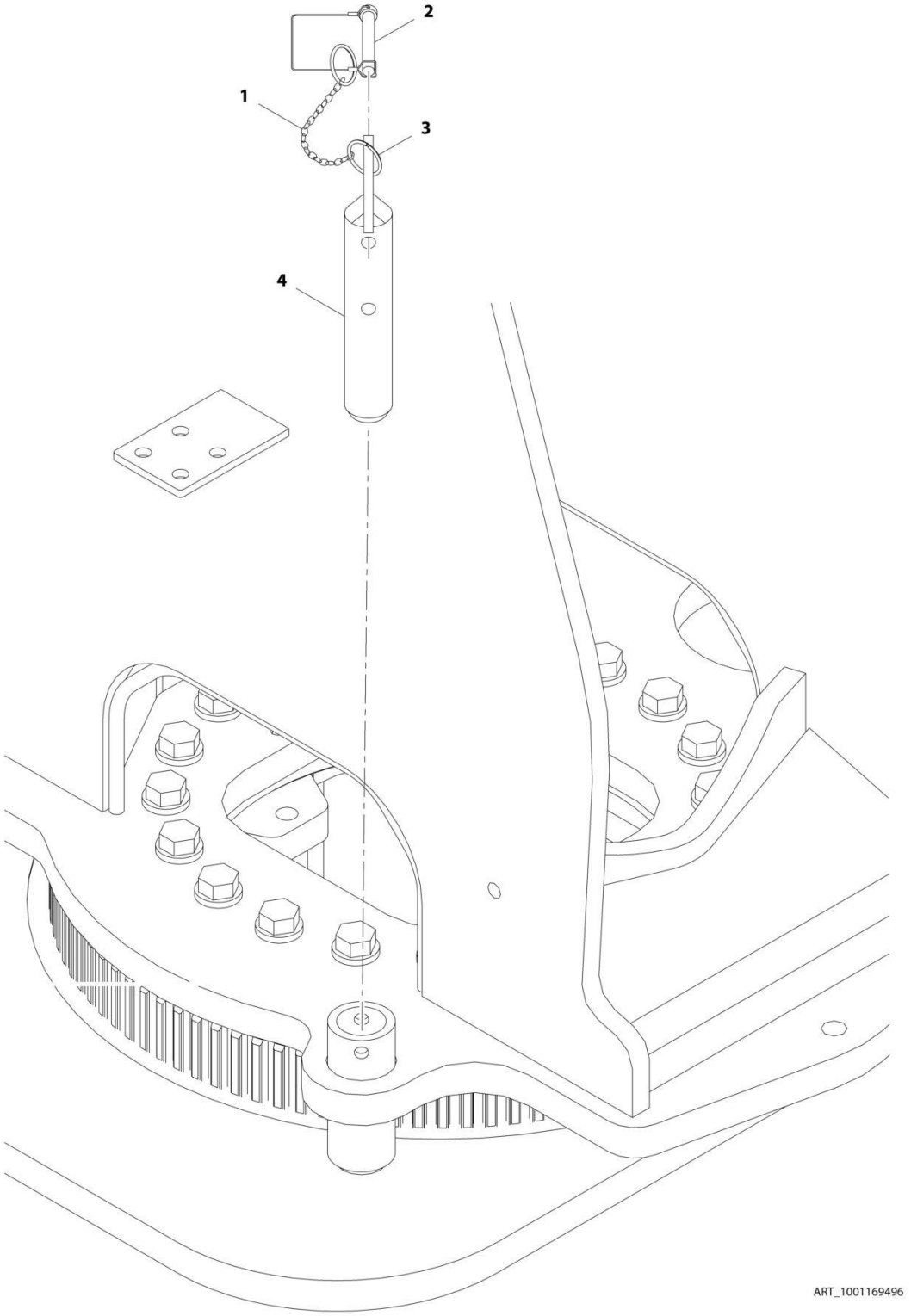

FIGURE 2-12. TURNTABLE LOCK INSTALLATION

ITEM	PART NUMBER	QTY	DESCRIPTION	REV
	1001169496	Ref	TURNTABLE LOCK INSTALLATION	B
1	1260017	1	Chain	
2	3421565	1	Pin, Snap	
3	3760170	2	Ring, Split	
4	1001169582	1	Pin	

FIGURE 2-13. ROTARY COUPLING INSTALLATION

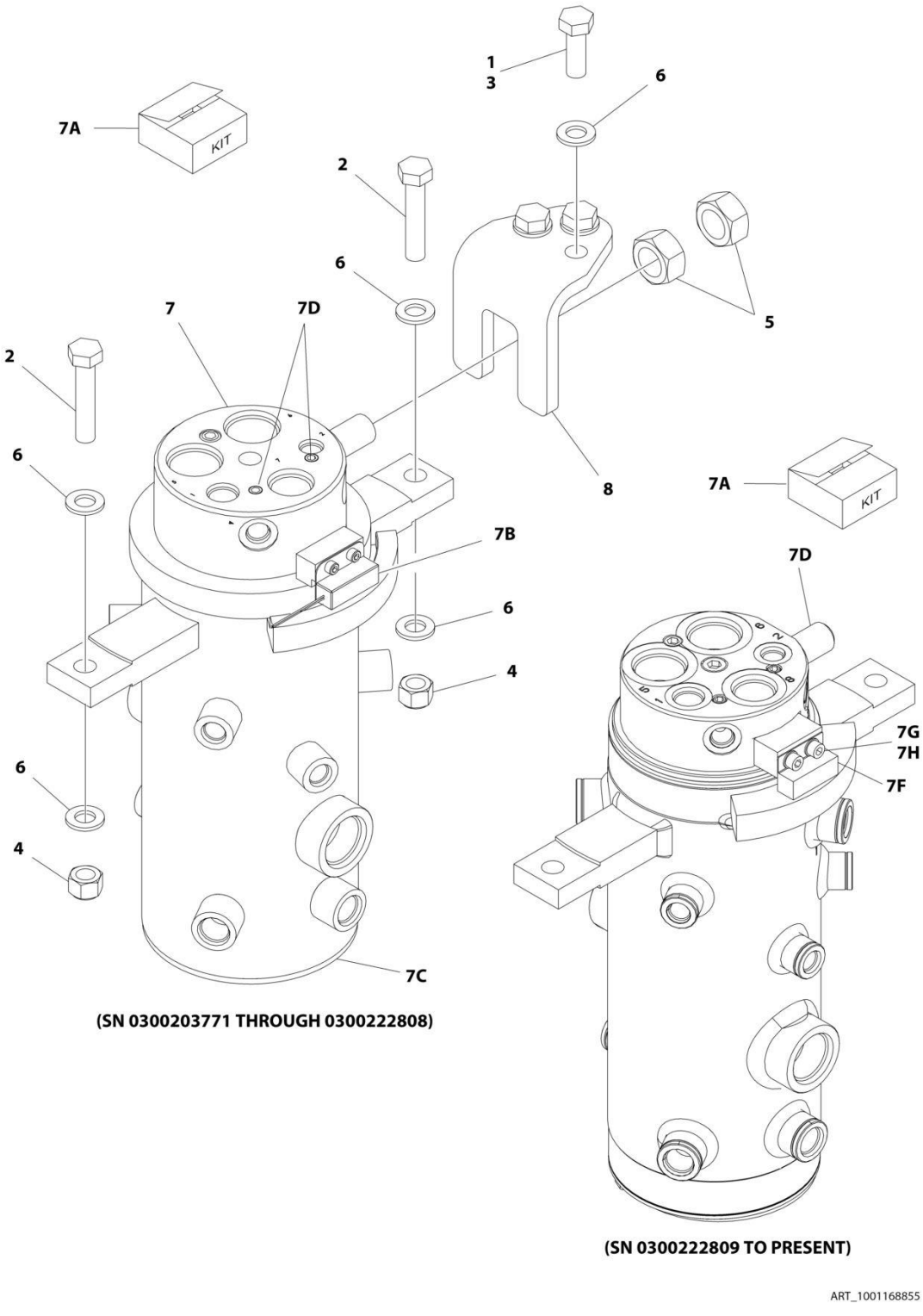

FIGURE 2-13. ROTARY COUPLING INSTALLATION

ITEM	PART NUMBER	QTY	DESCRIPTION	REV
	1001168855	Ref	ROTARY COUPLING INSTALLATION	C
1	0100011	AR	Compound, Locking	
2	0701220	2	Bolt M12 x 60	
3	0761215	3	Bolt M12 x 35	
4	3291205	AR	Nut M12	
4	3291201	AR	Nut M12	
5	3292001	2	Nut M20	
6	4812100	7	Washer M12	
7	1001168722	1	Rotary Coupling Assembly **(SN 0300203771 through 0300222808)**	
7A	70004983	1	Seal Kit - 1001168722 Coupling	
7B	4360517	1	Switch, Proximity	
7B	4460320	1	Plug, Male - 2 Position	
7B	4460227	2	Terminal	
7C	7026503	2	Ring, Thrust	
7C	7026504	1	Ring, Retaining	
7D	80934561	2	Plug 1/8	
7	1001188334	1	Rotary Coupling Assembly **(SN 0300222809 through 0300272360, SN E300000100 through E300007988, SN 1300007289 through 1300007393, Except SN 0300272174 through 0300272184, Excluding E300007847)**	
7A	70005716	1	Seal Kit - 1001188334 Coupling	
7B	70005710	1	Spacer (Not Shown)	
7C	70005711	1	Spacer (Not Shown)	
7D	70005712	1	Threaded Spigot	
7E	70005713	1	Circlip (Not Shown)	
7F	4360517	1	Switch, Proximity	
7G	70005714	1	Bolt	
7H	70005715	1	Washer	
8	1001169185	1	Mount	
9	2220238	1	Fitting, Plug ORB (Not Shown)	

FIGURE 2-14. TANKS INSTALLATION - DIESEL MACHINES (SN 0300203771 through 0300220609, SN E300000100 through E300004217, SN 1300007289 through 1300007393)

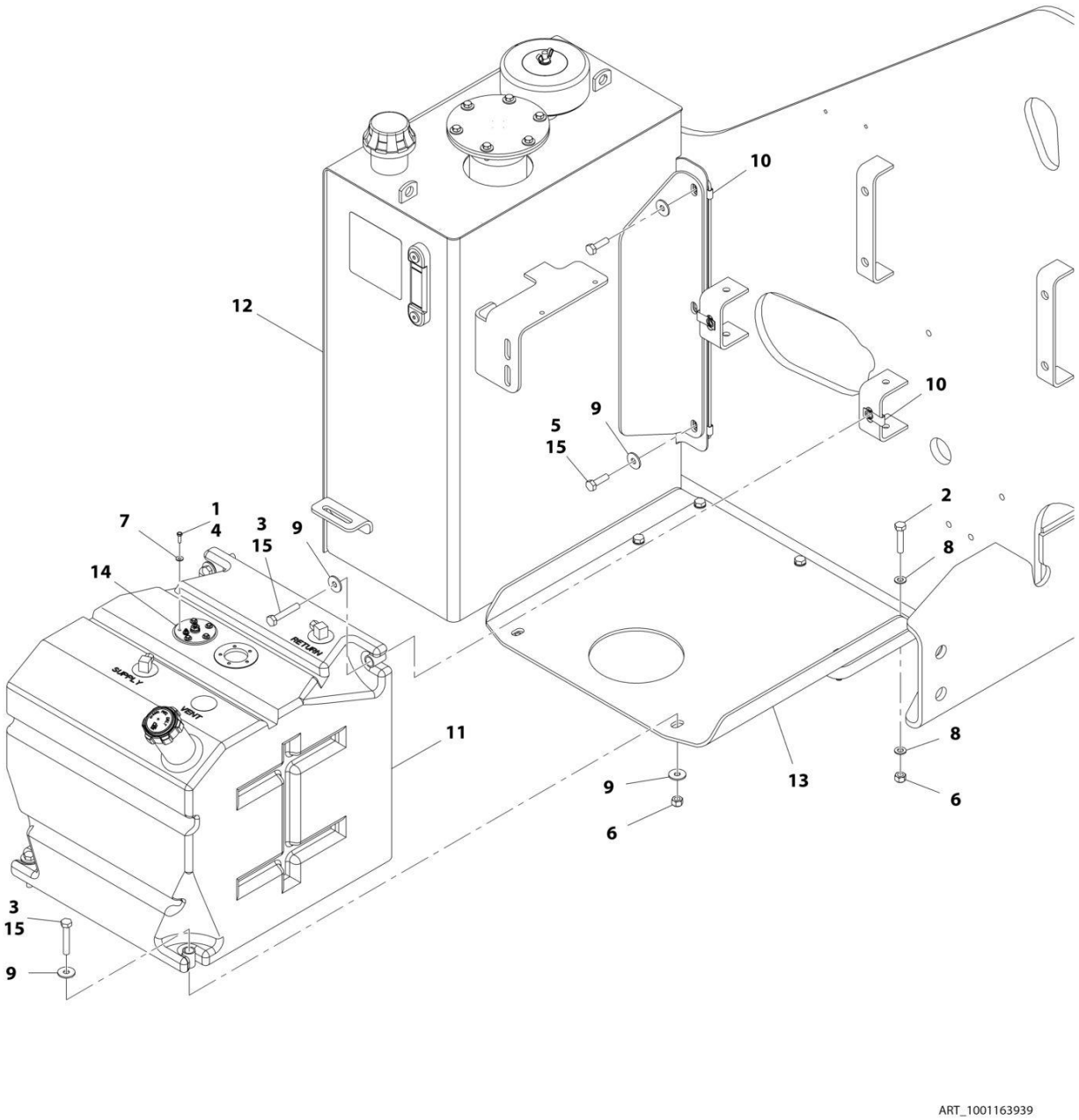

FIGURE 2-14. TANKS INSTALLATION - DIESEL MACHINES (SN 0300203771 through 0300220609, SN E300000100 through E300004217, SN 1300007289 through 1300007393)

ITEM	PART NUMBER	QTY	DESCRIPTION	REV
	1001163939	Ref	TANKS INSTALLATION - DIESEL MACHINES	G
1	0100035	AR	Compound, Locking	
2	0701018	5	Bolt M10 x 50	
3	0701020	4	Bolt M10 x 60	
4	0731005	5	Screw #10 x .625	
5	0761015	4	Bolt M10 x 35	
6	3291005	7	Nut M10	
7	4751000	5	Washer #10	
8	4812000	10	Washer M10	
9	4812002	AR	Washer M10	
10	1001118972	6	Nut M10	
11	1001163418	1	Tank, Fuel	
11	1001193336	1	Cap, Fill with Chain and Stop Spring	
11	70004794	1	Tube, Pick-up	
12	1001166031	1	Tank, Hydraulic	
12	70003614	1	Filter Kit (Includes Hydraulic Filter Element, Breather Element and Gasket)	
12	70002838	1	Cap, Fill (Includes Cap, Chain and Fill Basket)	
12	7024441	1	Gauge, Sight	
12	70005708	1	Breather Assembly	
13	1001166710	1	Plate	
14	1001168762	NLA	Sensor, Fuel Level (Use p/n 1001231195) **(SN 0300220610 through 0300237910, SN E300000100 through E300005049, SN 1300007289 through 1300007393)**	
14	1001231195	1	Sensor, Fuel Level **(SN 0300237911 through 0300272360, SN E300005050 through E300007988, SN 1300007394 through 1300007393, Except SN 0300272174 through 0300272184, Excluding E300007847)**	
15	0100011	AR	Compound, Locking	

FIGURE 2-15. TANKS INSTALLATION - DIESEL MACHINES (SN 0300220610 through 0300272360, SN E300004218 through E300007988)

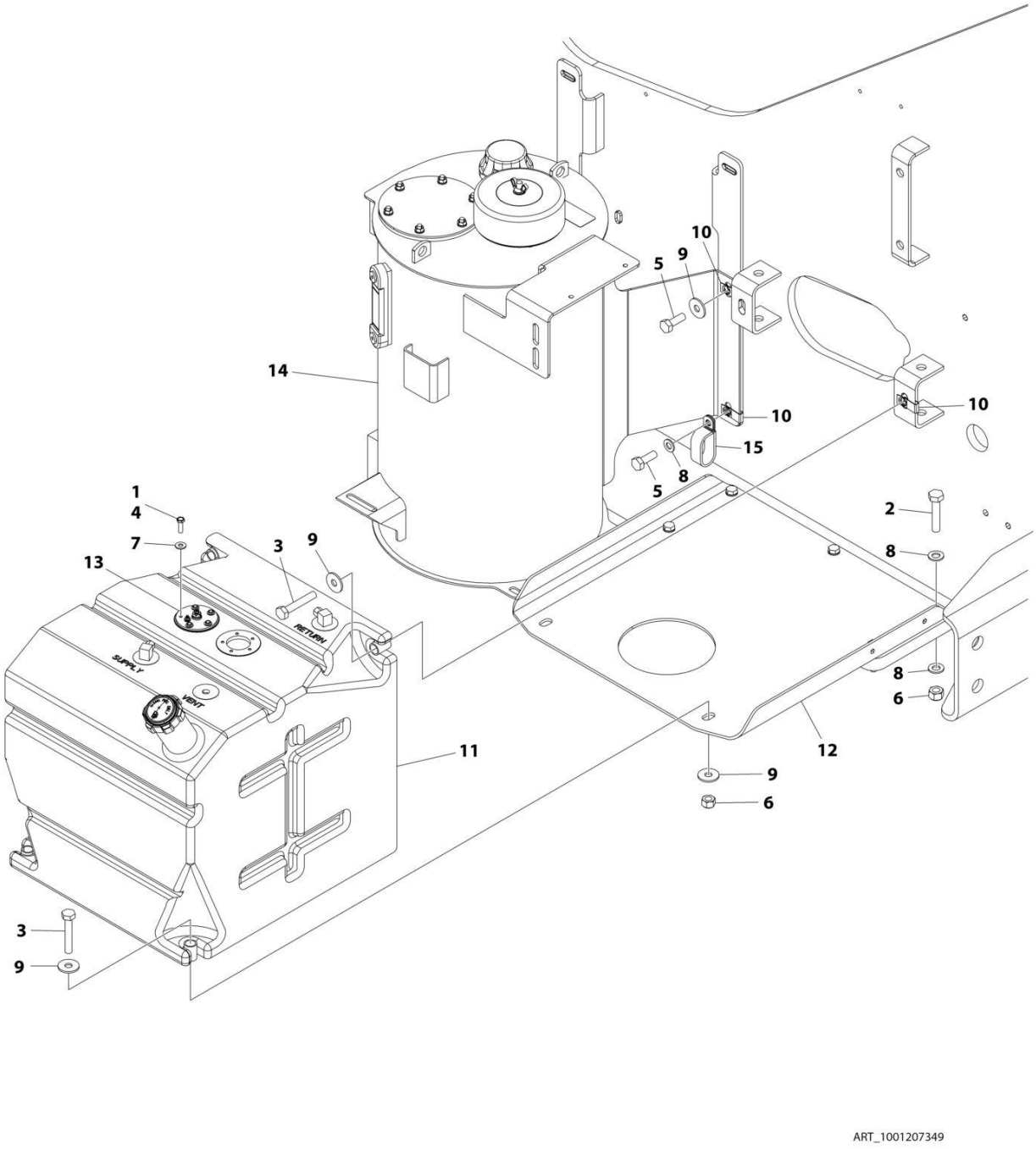

FIGURE 2-15. TANKS INSTALLATION - DIESEL MACHINES (SN 0300220610 through 0300272360, SN E300004218 through E300007988)

ITEM	PART NUMBER	QTY	DESCRIPTION	REV
	1001207349	Ref	TANKS INSTALLATION - DIESEL MACHINES	C
1	0100035	AR	Compound, Locking	
2	0701018	5	Bolt M10 x 50	
3	0701020	4	Bolt M10 x 60	
4	0731005	5	Screw #10 x .625	
5	0761014	4	Bolt M10 x 30	
6	3291005	7	Nut M10	
7	4751000	5	Washer #10	
8	4812000	AR	Washer M10	
9	4812002	AR	Washer M10	
10	1001118972	6	Nut M10	
11	1001163418	1	Tank, Fuel	
11	1001193336	1	Cap, Fill with Chain and Stop Spring	
11	70004794	1	Tube, Pick-up	
12	1001166710	1	Plate	
13	1001168762	NLA	Sensor, Fuel Level (Use p/n 1001231195) **(SN 0300220610 through 0300237910, SN E300004218 through E300005049)**	
13	1001231195	1	Sensor, Fuel Level **(SN 0300237911 through 0300272360, SN E300005050 through E300007988, Except SN 0300272174 through 0300272184, Excluding E300007847)**	
14	1001206917	1	Tank, Hydraulic (See Separate Breakdown in this Section)	
15	1321716	2	Clamp	

FIGURE 2-16. TANKS INSTALLATION - GAS MACHINES (SN 0300203771 through 0300220609)

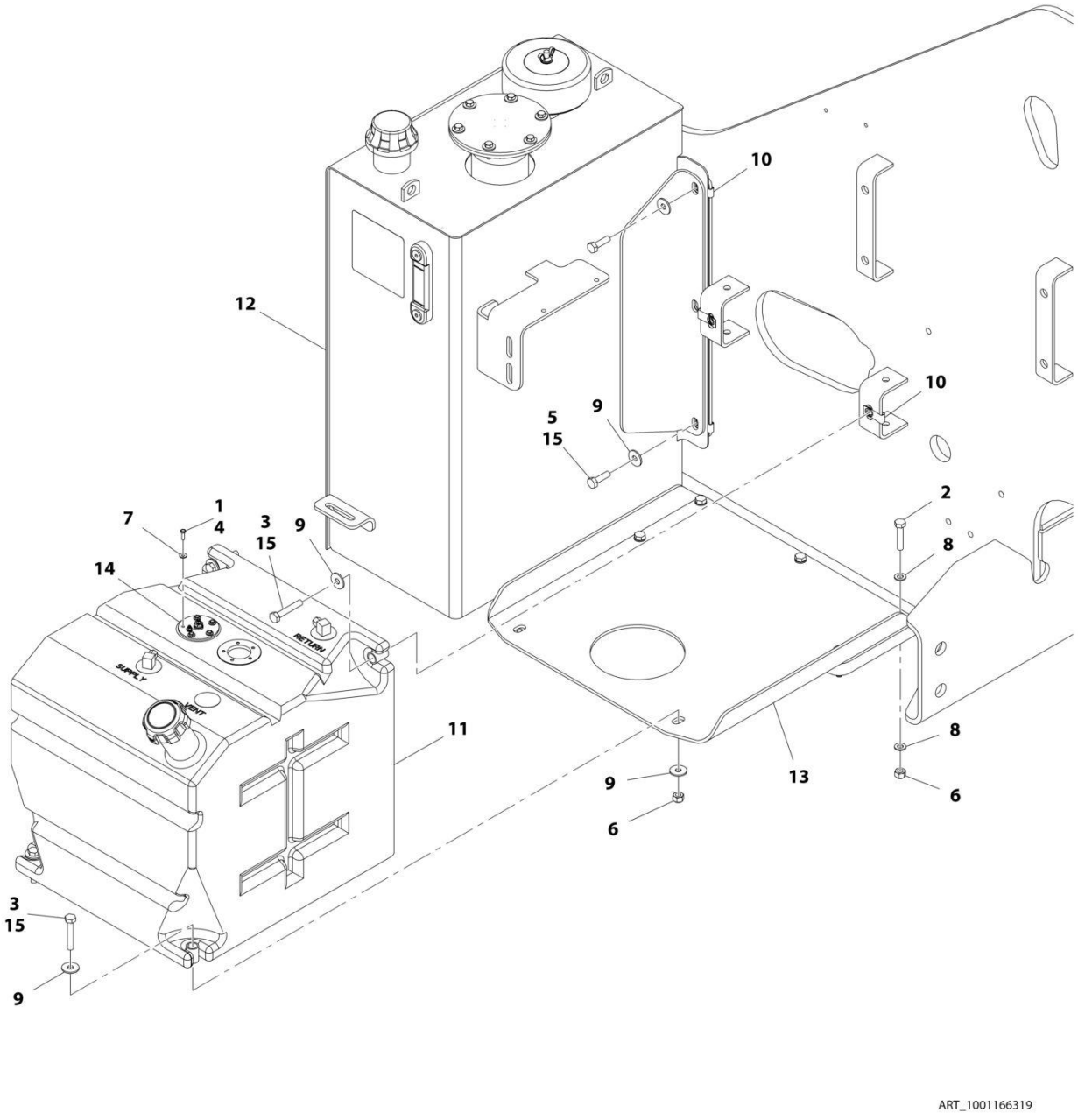

FIGURE 2-16. TANKS INSTALLATION - GAS MACHINES (SN 0300203771 through 0300220609)

ITEM	PART NUMBER	QTY	DESCRIPTION	REV
	1001166319	Ref	TANKS INSTALLATION - GAS MACHINES	G
1	0100035	AR	Compound, Locking	
2	0701018	5	Bolt M10 x 50	
3	0701020	4	Bolt M10 x 60	
4	0731005	5	Screw #10 x .625	
5	0761015	4	Bolt M10 x 35	
6	3291005	7	Nut M10	
7	4751000	5	Washer #10	
8	4812000	10	Washer M10	
9	4812002	AR	Washer M10	
10	1001118972	6	Nut M10	
11	1001163671	1	Tank, Fuel	
11	1001188197	1	Cap, Fill with Lanyard and Stop	
11	70004794	2	Tube, Pick-up	
12	1001166031	1	Tank, Hydraulic	
12	70003614	1	Filter Kit (Includes Hydraulic Filter Element, Breather Element and Gasket)	
12	70002838	1	Cap, Fill (Includes Cap, Chain and Fill Basket)	
12	7024441	1	Gauge, Sight	
12	70005708	1	Breather Assembly	
13	1001166710	1	Plate	
14	1001168762	1	Sensor, Fuel Level	
15	0100011	AR	Compound, Locking	

FIGURE 2-17. TANKS INSTALLATION - GAS MACHINES (SN 0300220610 through 0300272360)

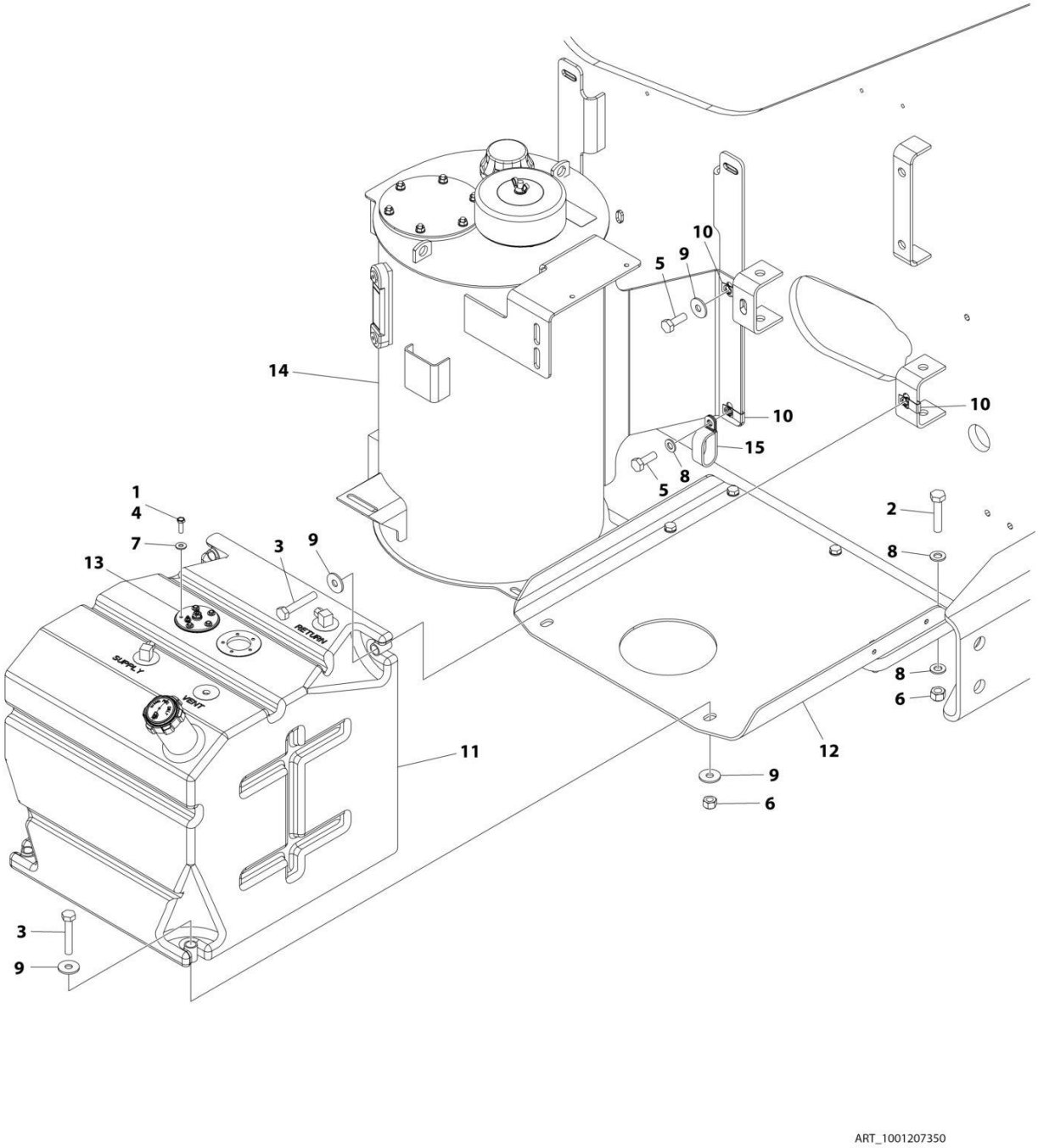

FIGURE 2-17. TANKS INSTALLATION - GAS MACHINES (SN 0300220610 through 0300272360)

ITEM	PART NUMBER	QTY	DESCRIPTION	REV
	1001207350	Ref	TANKS INSTALLATION - GAS MACHINES	D
1	0100035	AR	Compound, Locking	
2	0701018	5	Bolt M10 x 50	
3	0701020	4	Bolt M10 x 60	
4	0731005	5	Screw #10 x .625	
5	0761014	4	Bolt M10 x 30	
6	3291005	7	Nut M10	
7	4751000	5	Washer #10	
8	4812000	AR	Washer M10	
9	4812002	AR	Washer M10	
10	1001118972	6	Nut M10	
11	1001163671	1	Tank, Fuel	
11	1001188197	1	Cap, Fill with Lanyard and Stop	
11	70004794	2	Tube, Pick up	
12	1001166710	1	Plate	
13	1001168762	NLA	Sensor, Fuel Level (Use p/n 1001231195) **(SN 0300220610 through 0300237910)**	
13	1001231195	1	Sensor, Fuel Level **(SN 0300237911 through 0300272360, Except SN 0300272174 through 0300272184)**	
14	1001206917	1	Tank, Hydraulic (See Separate Breakdown in this Section)	
15	1321716	2	Clamp	

FIGURE 2-18. HYDRAULIC TANK ASSEMBLY

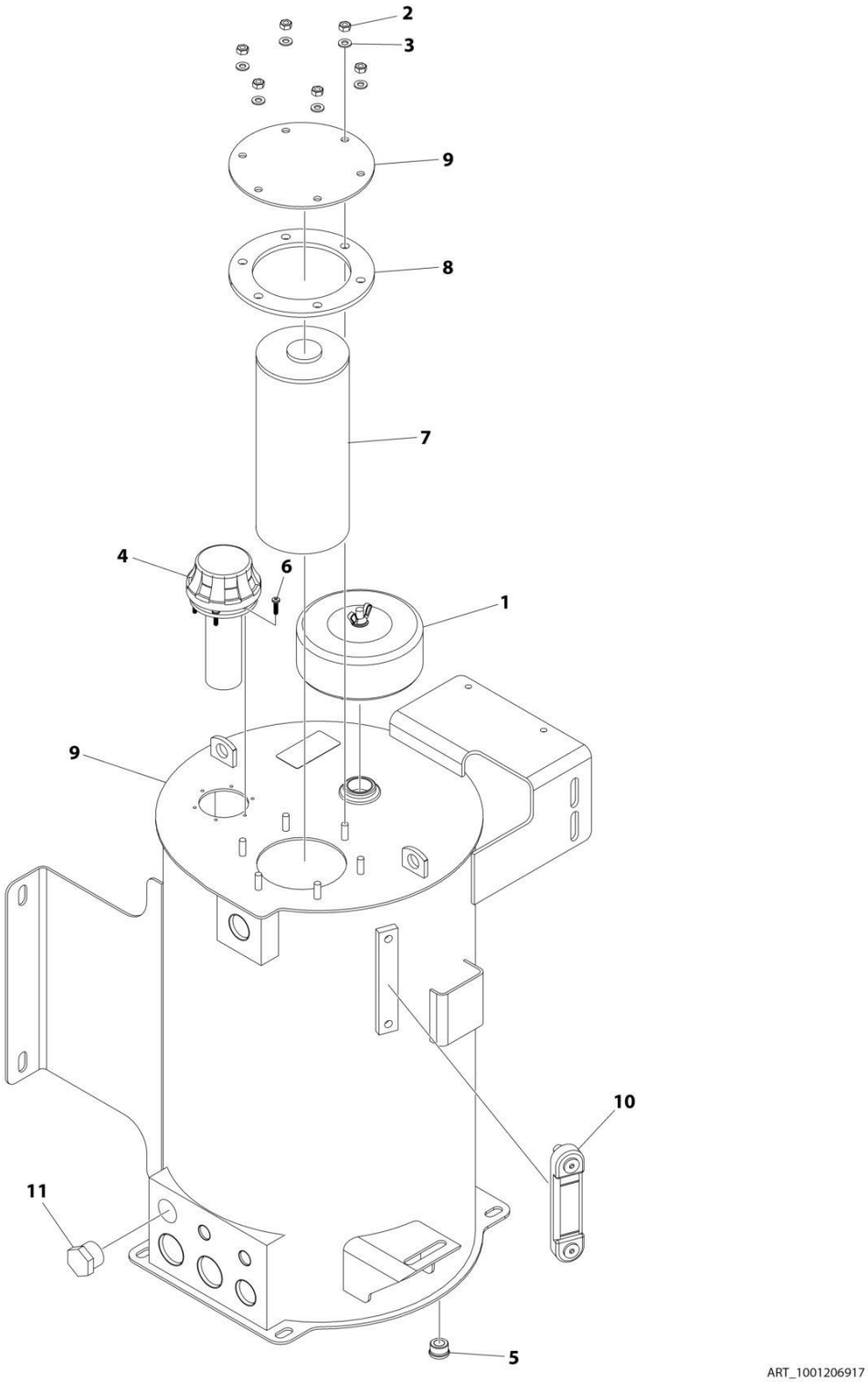

FIGURE 2-18. HYDRAULIC TANK ASSEMBLY

ITEM	PART NUMBER	QTY	DESCRIPTION	REV
	1001206917	Ref	HYDRAULIC TANK ASSEMBLY	A
1	See Note	NSS	Breather Assembly (Note: Use p/n 70003614)	
2	3311501	6	Nut 5/16	
3	4751400	6	Washer 1/4	
4	70002838	1	Cap, Fill	
5	70002112	1	Plug	
6	See Note	NSS	Screw #10 x 3/4 (Note: Not Available for purchase)	
7	See Note	NSS	Element, Filter (Note: Use p/n 70003614)	
8	1001199177	1	Gasket	
9	See Note	NSS	Reservoir (Note: Not Available for purchase)	
10	7024441	1	Gauge, Level	
11	2220887	1	Plug	

FIGURE 2-19. AUXILIARY PUMP AND BATTERY INSTALLATION

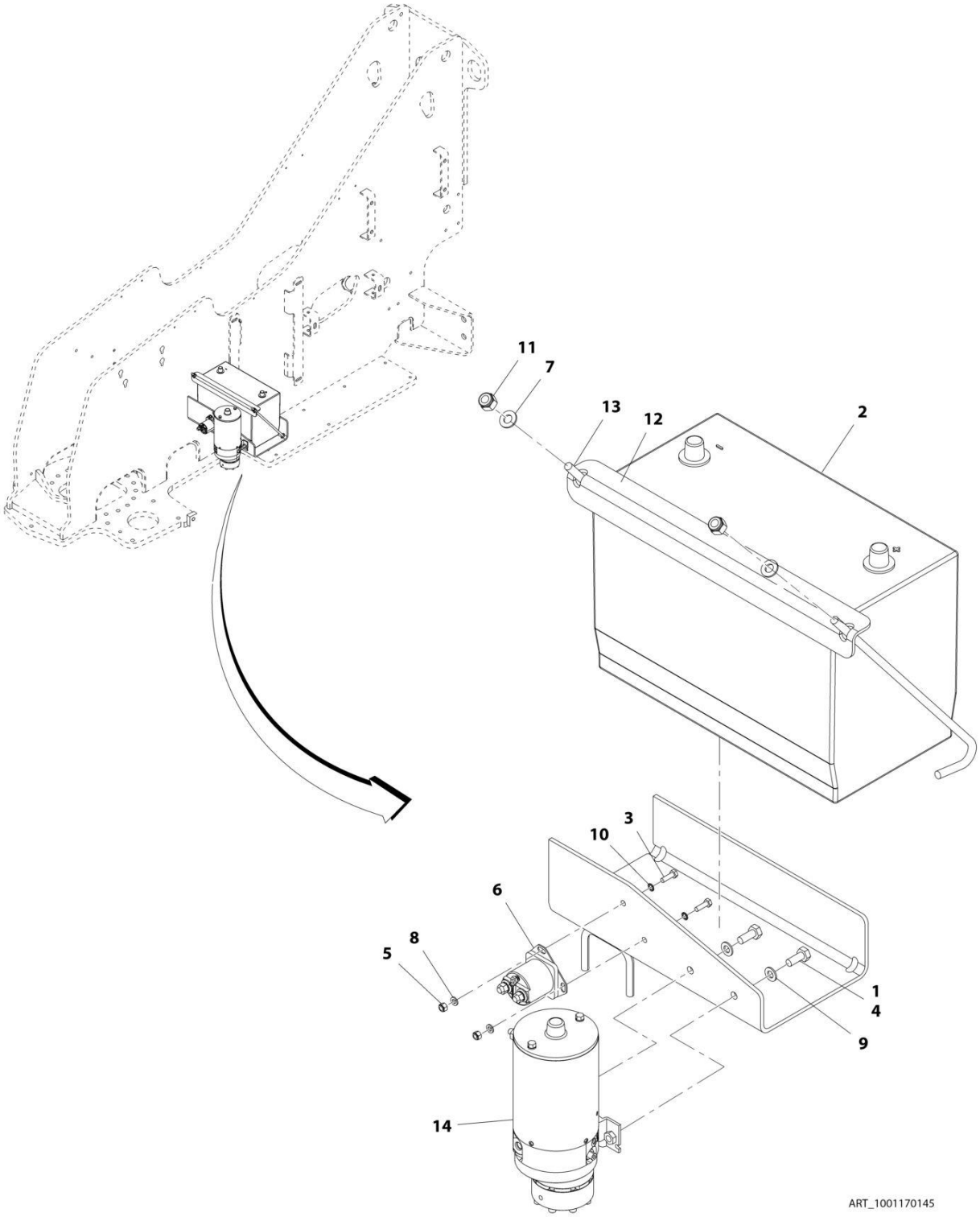

FIGURE 2-19. AUXILIARY PUMP AND BATTERY INSTALLATION

ITEM	PART NUMBER	QTY	DESCRIPTION	REV
	1001170145	Ref	AUXILIARY PUMP AND BATTERY INSTALLATION	C
1	0100011	AR	Compound, Locking	
2	0400075	1	Battery	
3	0760610	2	Bolt M6 x 20	
4	0761012	2	Bolt M10 x 25	
5	3290605	2	Nut M6	
6	3740067	1	Relay	
6	3300220	2	Nut 3/8	
6	3321001	1	Nut #10	
6	4761000	1	Washer #10	
6	1001111424	2	Washer 3/8	
7	4711500	2	Washer 5/16	
8	4811700	2	Washer M6	
9	4812000	2	Washer M10	
10	4871700	2	Washer M6	
11	88521205	2	Nut 5/16	
12	91401281	1	Bracket	
13	1001093382	2	J-Bolt	
14	1001185821	1	Auxiliary Pump Assembly (See AUXILIARY PUMP ASSEMBLY for Breakdown)	

FIGURE 2-20. AUXILIARY PUMP AND BATTERY WITH DISCONNECT SWITCH INSTALLATION

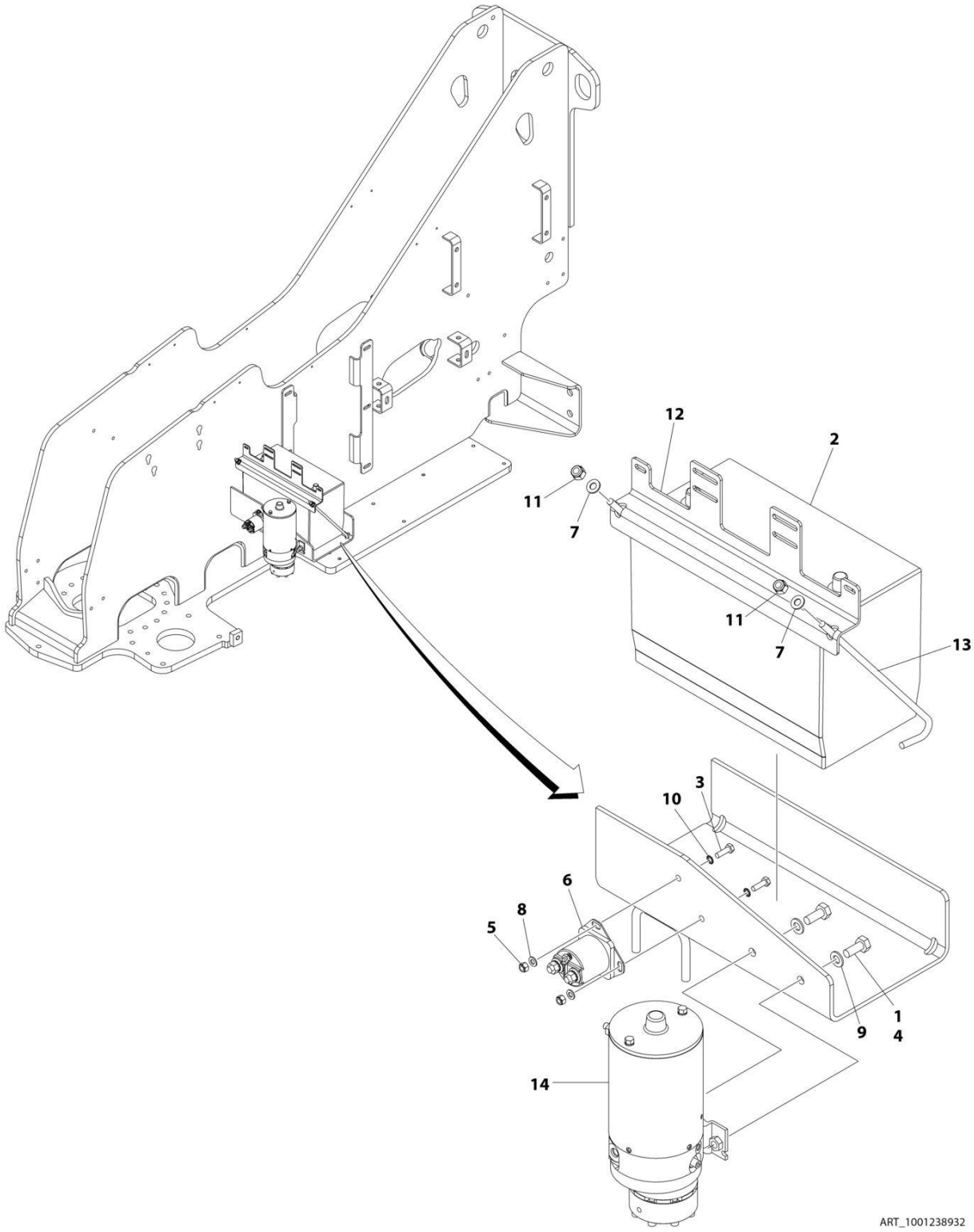

FIGURE 2-20. AUXILIARY PUMP AND BATTERY WITH DISCONNECT SWITCH INSTALLATION

ITEM	PART NUMBER	QTY	DESCRIPTION	REV
	1001238932	Ref	AUXILIARY PUMP AND BATTERY INSTALLATION WITH DISCONNECT	A
1	0100011	AR	Compound, Locking	
2	0400075	1	Battery	
3	0760610	2	Bolt M6 x 20	
4	0761012	2	Bolt M10 x 25	
5	3290605	2	Nut M6	
6	3740067	1	Relay	
6	3300220	2	Nut 3/8	
6	3321001	1	Nut #10	
6	4761000	1	Washer #10	
6	1001111424	2	Washer 3/8	
7	4711500	2	Washer 5/16	
8	4811700	2	Washer M6	
9	4812000	2	Washer M10	
10	4871700	2	Washer M6	
11	88521205	2	Nut 5/16	
12	1001236303	1	Bracket	
13	1001093382	2	J-Bolt	
14	1001185821	1	Auxiliary Pump Assembly (See Separate Breakdown in this Section)	

FIGURE 2-21. AUXILIARY PUMP ASSEMBLY

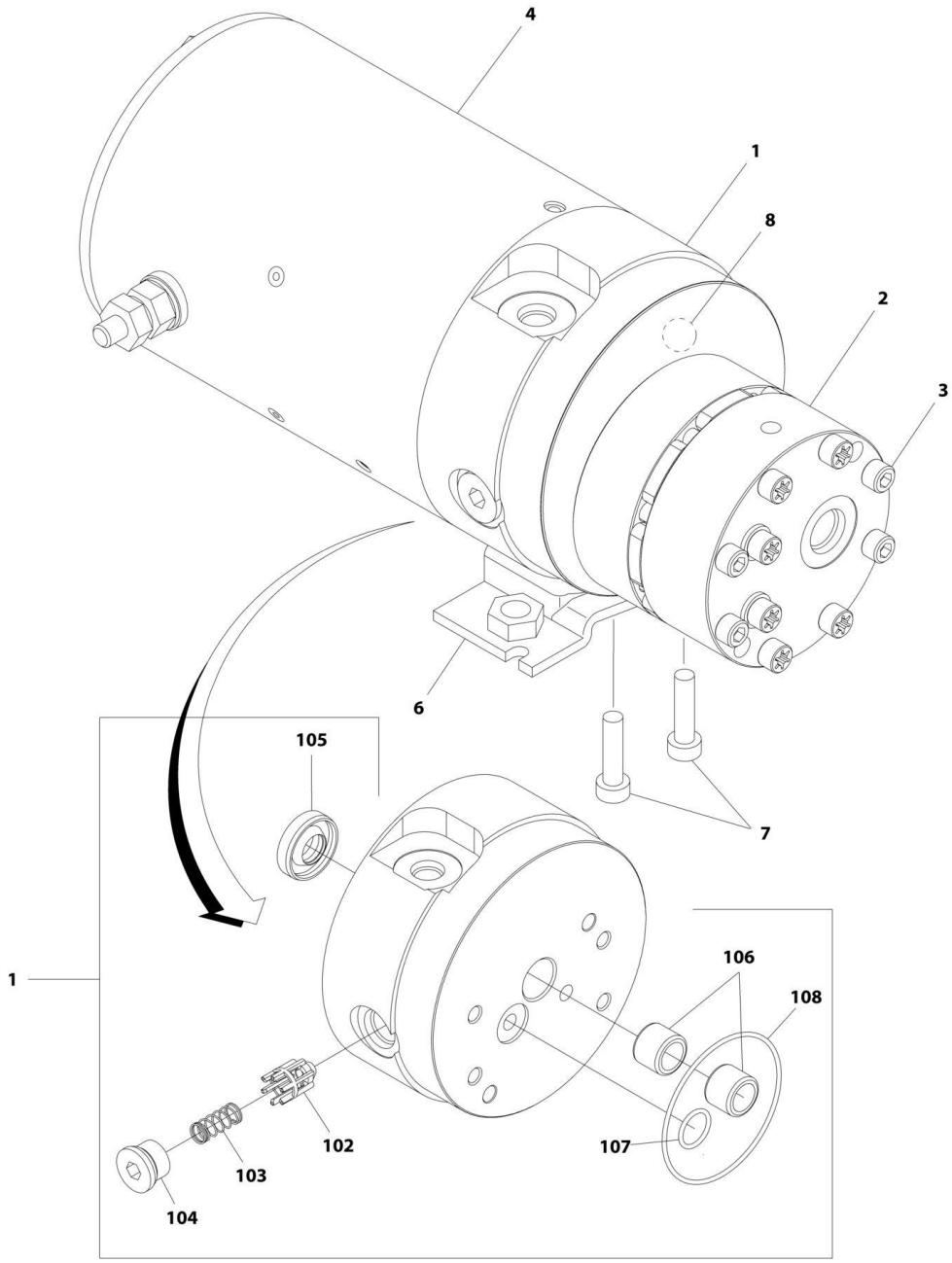

FIGURE 2-21. AUXILIARY PUMP ASSEMBLY

ITEM	PART NUMBER	QTY	DESCRIPTION	REV
	1001185821	Ref	AUXILIARY PUMP ASSEMBLY	B
1	70005065	1	Base Assembly (See Items 102-108 for Breakdown)	
2	70005066	1	Pump Assembly (Note: No Seal Kit or Internal Components are Available - Purchase Complete Pump Assembly)	
3	70005067	4	Capscrew 1/4 x 2-3/4	
4	70004013	1	Motor Assembly (Note: No Internal Components are Available - Purchase Complete Motor Assembly)	
6	70004014	1	Bracket	
7	70004000	2	Capscrew 3/8 x 1	
8	70005068	1	Relief Valve Assembly	
	70005065	Ref	BASE ASSEMBLY	
102	See Note	NSS	Poppet, Check (Note: Use p/n 70005065)	
103	See Note	NSS	Spring (Note: Use p/n 70005065)	
104	See Note	NSS	Plug (Note: Use p/n 70005065)	
105	7026330	1	Seal, Shaft	
106	70005139	2	Bearing	
107	70003612	1	O-Ring	
108	70004267	1	O-Ring	

FIGURE 2-22. ELECTRICAL INSTALLATION - 400S (ALL SPECS EXCEPT AUSTRALIAN SPEC) (SN 0300203771 through 0300250355)

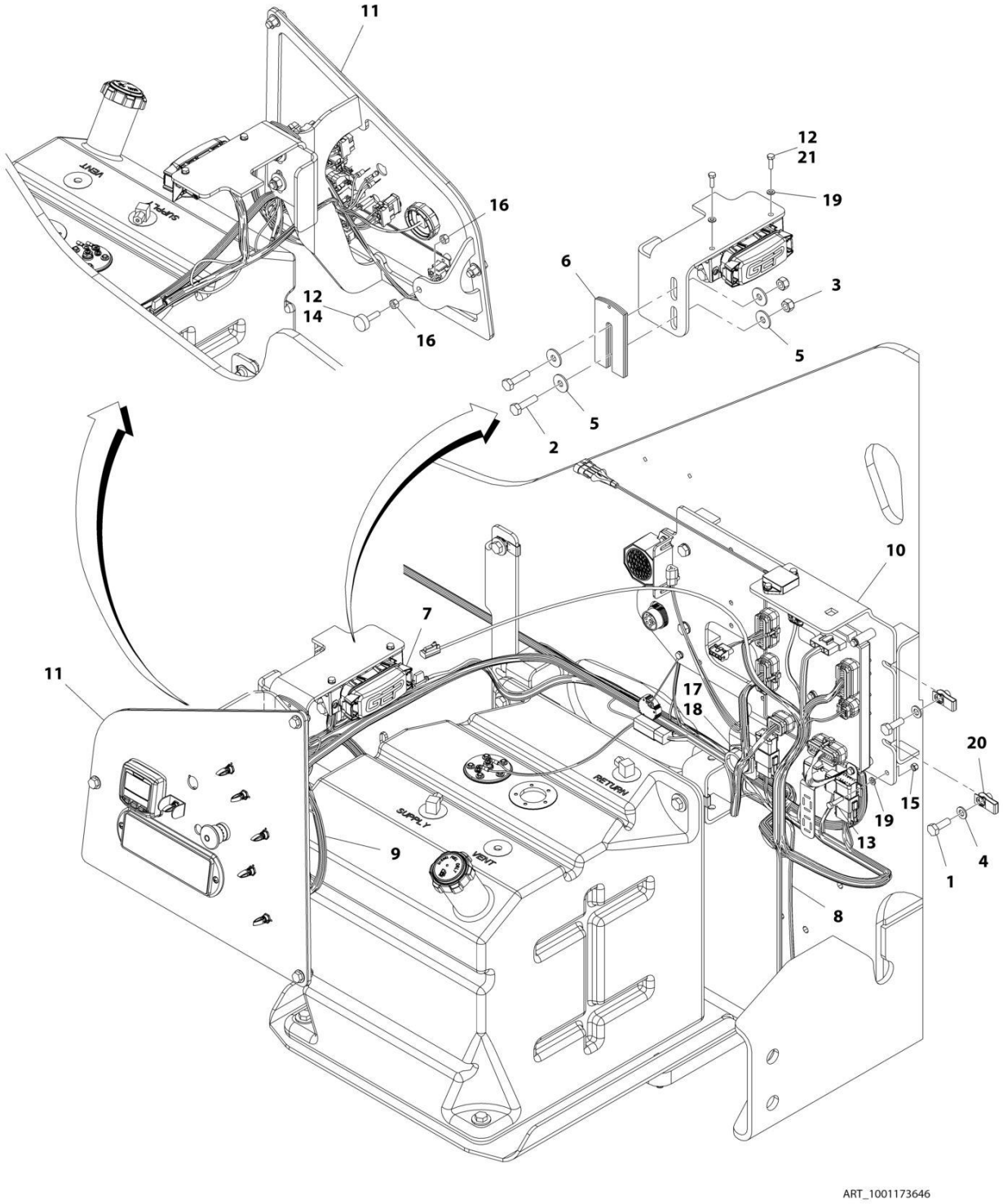

FIGURE 2-22. ELECTRICAL INSTALLATION - 400S (ALL SPECS EXCEPT AUSTRALIAN SPEC) (SN 0300203771 through 0300250355)

ITEM	PART NUMBER	QTY	DESCRIPTION	REV
	1001173646	Ref	ELECTRICAL INSTALLATION - 400S (ALL SPECS EXCEPT AUSTRALIAN SPEC)	I
1	0761014	4	Bolt M10 x 30	
2	0761016	2	Bolt M10 x 40	
3	3291005	2	Nut M10	
4	4812000	4	Washer M10	
5	4812002	4	Washer M10	
6	1001150324	AR	Shim 3	
7	1001164818	1	Turntable Harness (See ELECTRICAL SECTION for Breakdown)	
8	1001166963	1	Valve Harness (See ELECTRICAL SECTION for Breakdown)	
9	1001166964	1	Ground Control Box Harness (See ELECTRICAL SECTION for Breakdown)	
10	1001172757	1	Electrical Panel Assembly (See ELECTRICAL PANEL ASSEMBLY for Breakdown)	
11	1001173645	1	Ground Control Assembly (See GROUND CONTROL ASSEMBLY - 400S for Breakdown)	
12	0100011	AR	Compound, Locking	
13	0700612	AR	Bolt M6 x 25	
14	0940049	AR	Stopper, Hood	
15	3290605	1	Nut M6	
16	3311501	2	Nut 5/16	
17	4460470	1	Nut, Terminal	
18	4460471	1	Washer, Terminal	
19	4811700	4	Washer M6	
20	1001118972	4	Nut M10	
21	0760610	2	Bolt M6 x 20	
22	4240099	AR	Tie-Strap (Not Shown)	
23	1001196637	1	Decal - Fuse Box	

FIGURE 2-23. ELECTRICAL INSTALLATION - 400S (ALL SPECS EXCEPT AUSTRALIAN SPEC) (SN 0300250356 through 0300272360)

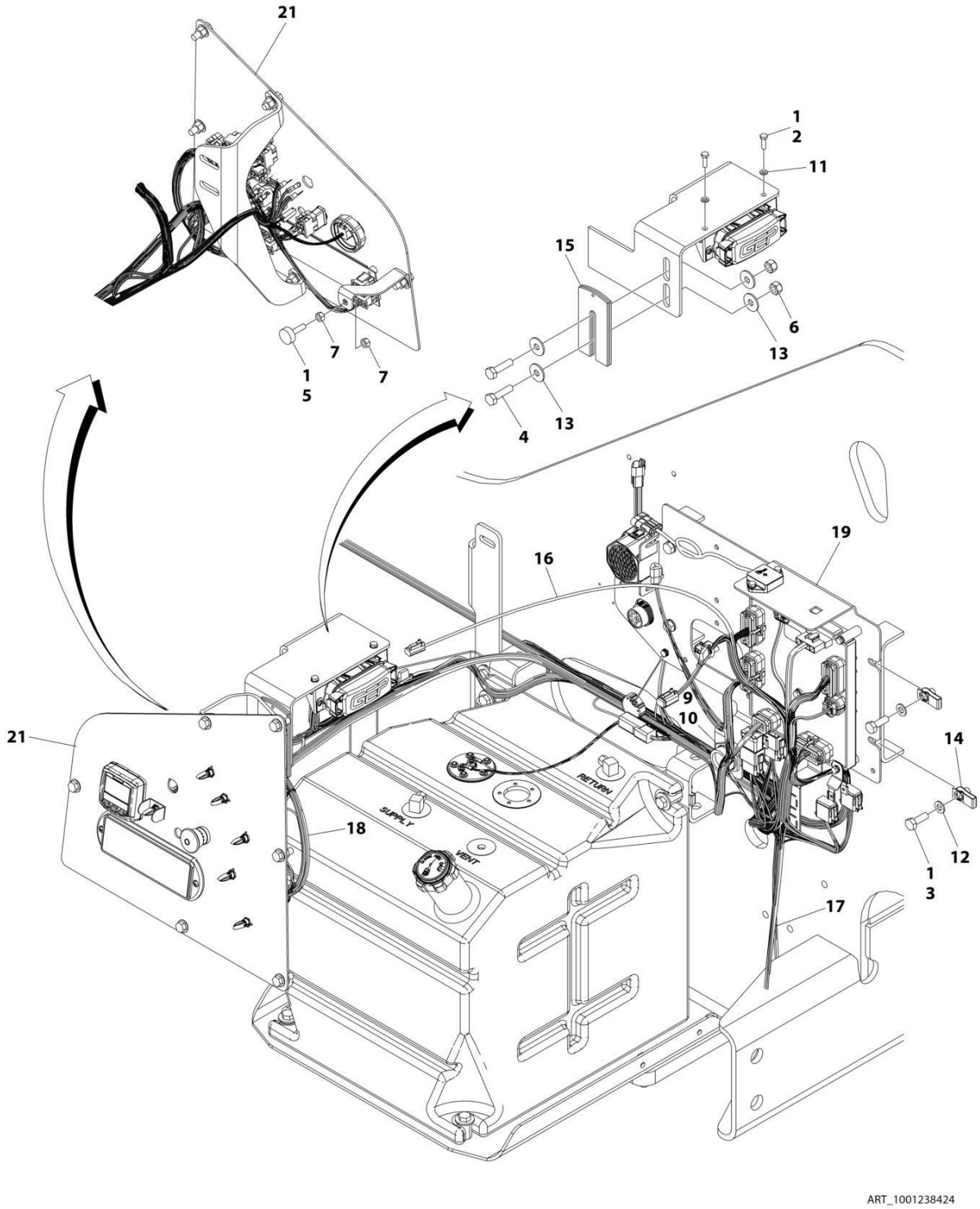

FIGURE 2-23. ELECTRICAL INSTALLATION - 400S (ALL SPECS EXCEPT AUSTRALIAN SPEC) (SN 0300250356 through 0300272360)

ITEM	PART NUMBER	QTY	DESCRIPTION	REV
	1001238424	Ref	ELECTRICAL INSTALLATION - 400S	B
1	0100011	AR	Compound, Locking	
2	0760610	2	Bolt M6 x 20	
3	0761014	4	Bolt M10 x 30	
4	0761016	2	Bolt M10 x 40	
5	0940049	1	Stopper, Hood	
6	3291005	2	Nut M10	
7	3311501	2	Nut 5/16	
8	4240099	AR	Tie-Strap (Not Shown)	
9	4460470	1	Nut, Terminal	
10	4460471	1	Washer, Terminal	
11	4811700	2	Washer M6	
12	4812000	4	Washer M10	
13	4812002	4	Washer M10	
14	1001118972	4	Nut M10	
15	1001150324	AR	Shim 3	
16	1001164818	1	Turntable Harness (See ELECTRICAL SECTION for Breakdown)	
17	1001166963	1	Valve Harness (See ELECTRICAL SECTION for Breakdown)	
18	1001166964	1	Ground Control Box Harness (See ELECTRICAL SECTION for Breakdown)	
19	1001172757	1	Electrical Panel Assembly (See ELECTRICAL PANEL ASSEMBLY for Breakdown)	
20	1001196637	1	Decal - Fuse Box (Not Shown)	
21	1001238888	1	Ground Control Assembly (See GROUND CONTROL ASSEMBLY - 400S (ANSI AND CSA SPECS) for Breakdown)	

FIGURE 2-24. ELECTRICAL INSTALLATION - 400S (ANSI AND CSA SPECS) (SN 0300203771 through 0300250355)

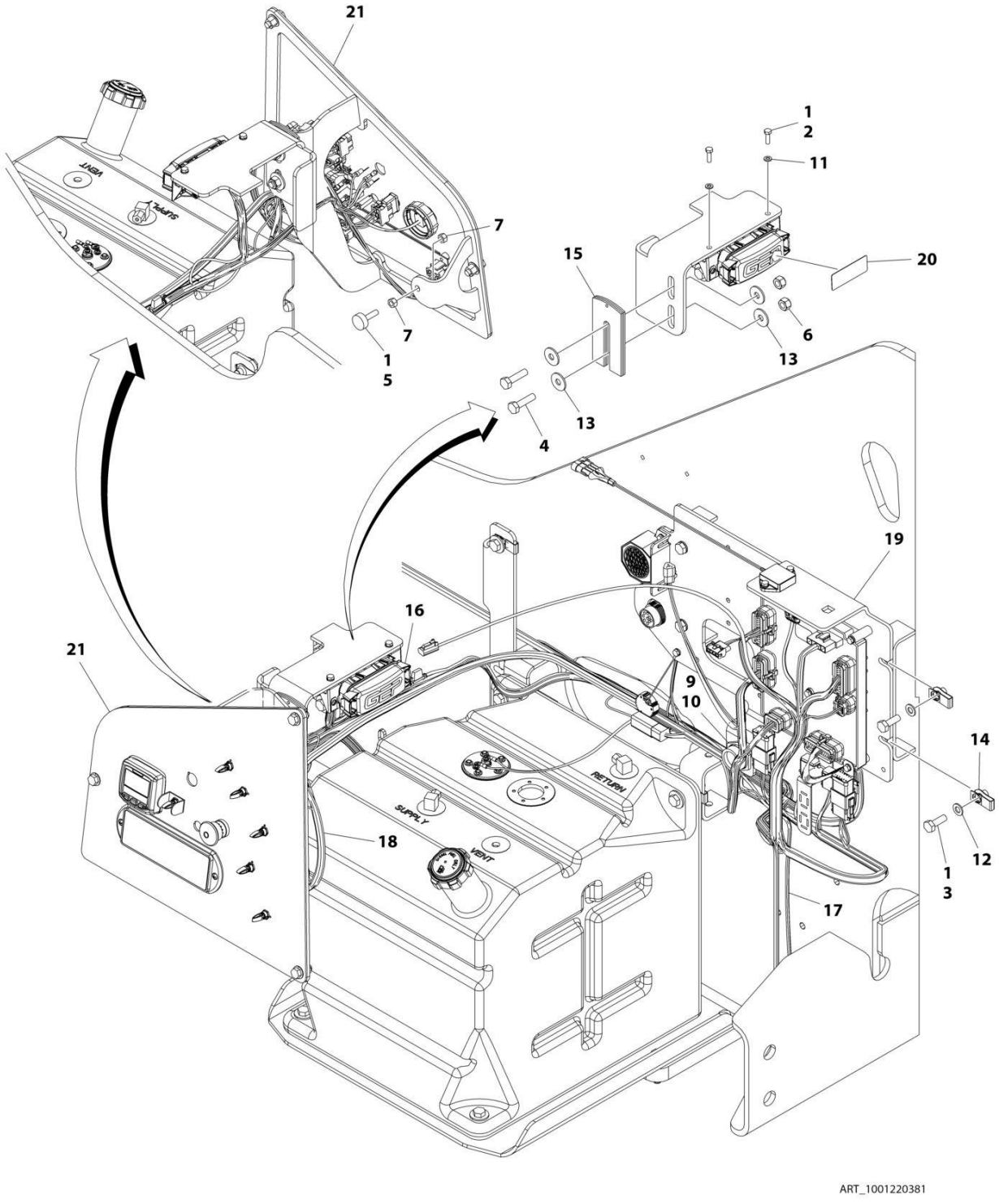

FIGURE 2-24. ELECTRICAL INSTALLATION - 400S (ANSI AND CSA SPECS) (SN 0300203771 through 0300250355)

ITEM	PART NUMBER	QTY	DESCRIPTION	REV
	1001220381	Ref	ELECTRICAL INSTALLATION - 400S (ANSI AND CSA SPECS)	B
1	0100011	AR	Compound, Locking	
2	0760610	2	Bolt M6 x 20	
3	0761014	4	Bolt M10 x 30	
4	0761016	2	Bolt M10 x 40	
5	0940049	1	Stopper, Hood	
6	3291005	2	Nut M10	
7	3311501	2	Nut 5/16	
8	4240099	AR	Tie-Strap (Not Shown)	
9	4460470	1	Nut, Terminal	
10	4460471	1	Washer, Terminal	
11	4811700	2	Washer M6	
12	4812000	4	Washer M10	
13	4812002	4	Washer M10	
14	1001118972	4	Nut M10	
15	1001150324	AR	Shim 3	
16	1001164818	1	Turntable Harness (See ELECTRICAL SECTION for Breakdown)	
17	1001166963	1	Valve Harness (See ELECTRICAL SECTION for Breakdown)	
18	1001166964	1	Ground Control Box Harness (See ELECTRICAL SECTION for Breakdown)	
19	1001172757	1	Electrical Panel Assembly (See ELECTRICAL PANEL ASSEMBLY for Breakdown)	
20	1001196637	1	Decal - Fuse Box	
21	1001216653	1	Ground Control Assembly (See GROUND CONTROL ASSEMBLY - 400S (ANSI AND CSA SPECS) for Breakdown)	

FIGURE 2-25. ELECTRICAL INSTALLATION - 400S (SN 0300250356 through 0300272360)

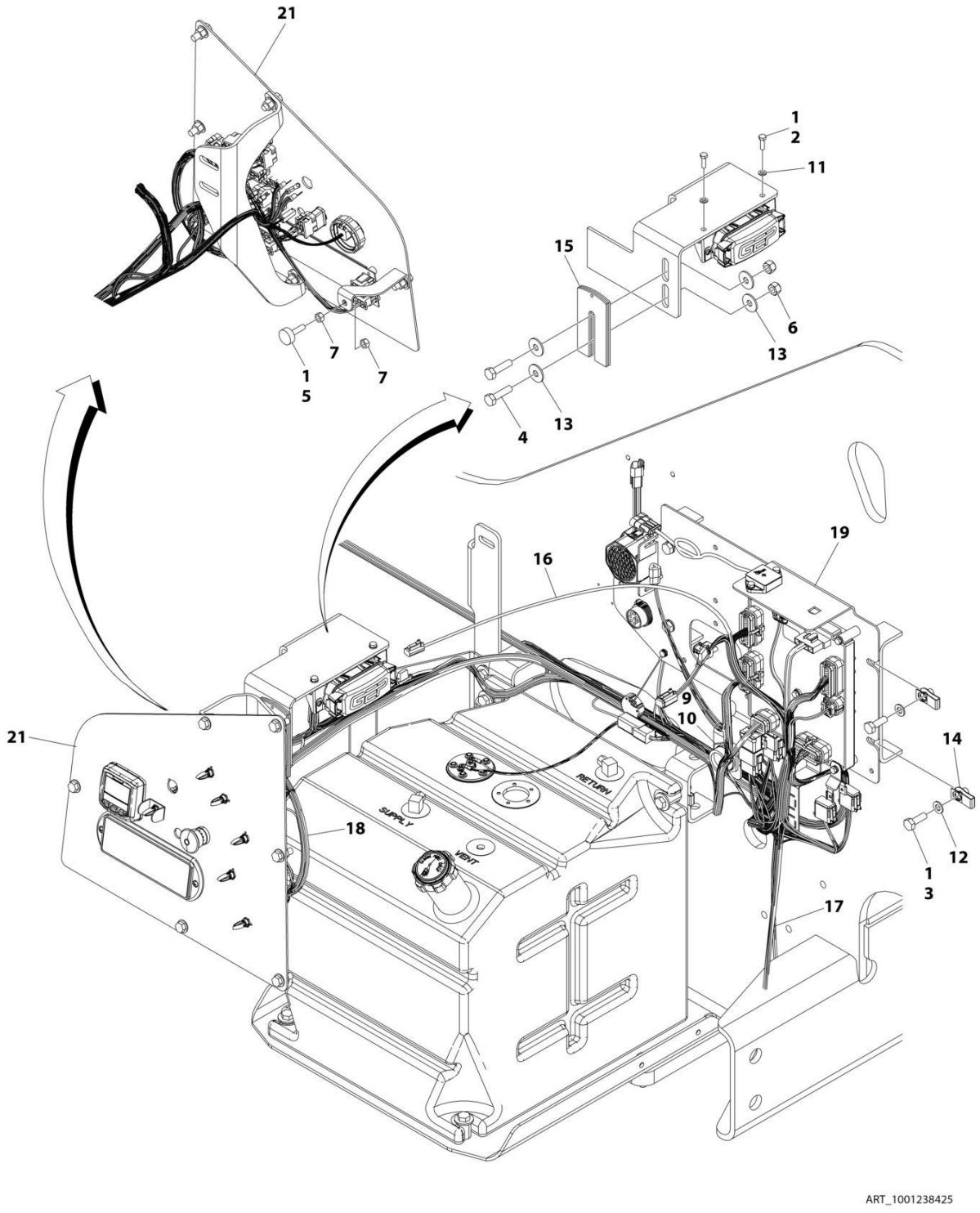

FIGURE 2-25. ELECTRICAL INSTALLATION - 400S (SN 0300250356 through 0300272360)

ITEM	PART NUMBER	QTY	DESCRIPTION	REV
	1001238425	Ref	ELECTRICAL INSTALLATION	A
1	0100011	AR	Compound, Locking	
2	0760610	2	Bolt M6 x 20	
3	0761014	4	Bolt M10 x 30	
4	0761016	2	Bolt M10 x 40	
5	0940049	1	Stopper, Hood	
6	3291005	2	Nut M10	
7	3311501	2	Nut 5/16	
8	4240099	AR	Tie-Strap (Not Shown)	
9	4460470	1	Nut, Terminal	
10	4460471	1	Washer, Terminal	
11	4811700	2	Washer M6	
12	4812000	4	Washer M10	
13	4812002	4	Washer M10	
14	1001118972	4	Nut M10	
15	1001150324	AR	Shim 3	
16	1001164818	1	Turntable Harness (See ELECTRICAL SECTION for Breakdown)	
17	1001166963	1	Valve Harness (See ELECTRICAL SECTION for Breakdown)	
18	1001166964	1	Ground Control Box Harness (See ELECTRICAL SECTION for Breakdown)	
19	1001172757	1	Electrical Panel Assembly (See ELECTRICAL PANEL ASSEMBLY for Breakdown)	
20	1001196637	1	Decal - Fuse Box (Not Shown)	
21	1001238890	1	Ground Control Assembly (See GROUND CONTROL ASSEMBLY - 400S (ANSI AND CSA SPECS) for Breakdown)	

FIGURE 2-26. ELECTRICAL INSTALLATION - 460SJ (SN 0300203771 through 0300250355, SN E300000100 through E300006809)

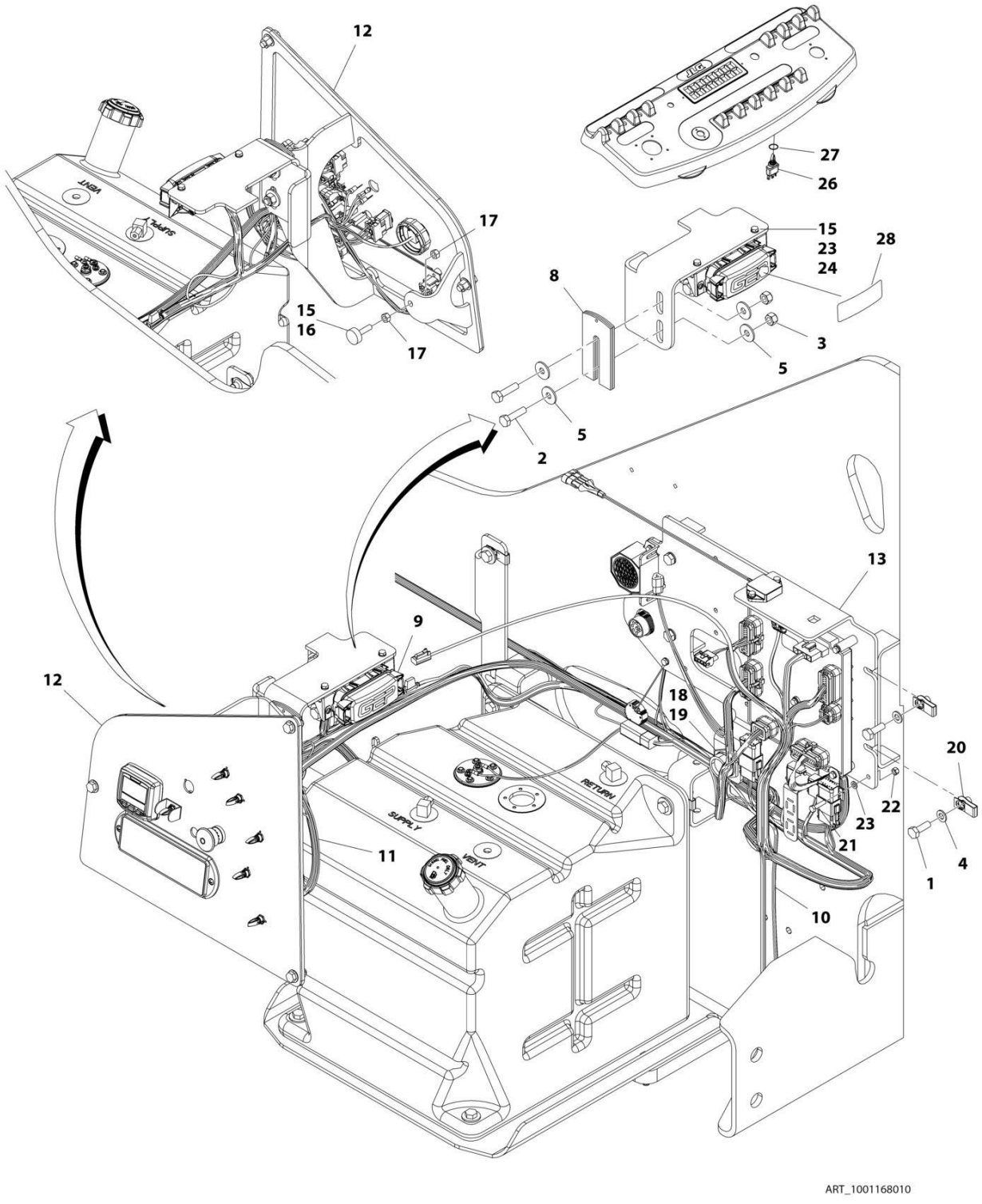

FIGURE 2-26. ELECTRICAL INSTALLATION - 460SJ (SN 0300203771 through 0300250355, SN E300000100 through E300006809)

ITEM	PART NUMBER	QTY	DESCRIPTION	REV
	1001168010	Ref	ELECTRICAL INSTALLATION - 460SJ	I
1	0761014	4	Bolt M10 x 30	
2	0761016	2	Bolt M10 x 40	
3	3291005	2	Nut M10	
4	4812000	4	Washer M10	
5	4812002	4	Washer M10	
8	1001150324	AR	Shim 3	
9	1001164818	1	Turntable Harness (See ELECTRICAL SECTION for Breakdown)	
10	1001166963	1	Valve Harness (See ELECTRICAL SECTION for Breakdown)	
11	1001166964	1	Ground Control Box Harness (See ELECTRICAL SECTION for Breakdown)	
12	1001169164	1	Ground Control Assembly (See GROUND CONTROL ASSEMBLY - 460SJ for Breakdown)	
13	1001172757	1	Electrical Panel Assembly (See ELECTRICAL PANEL ASSEMBLY for Breakdown)	
15	0100011	AR	Compound, Locking	
16	0940049	1	Stopper, Hood	
17	3311501	2	Nut 5/16	
18	4460470	1	Nut, Terminal	
19	4460471	1	Washer, Terminal	
20	1001118972	4	Nut M10	
21	0700612	AR	Bolt M6 x 25	
22	3290605	AR	Nut M6	
23	4811700	2	Washer M6	
24	0760610	2	Bolt M6 x 20	
25	4240099	AR	Tie-Strap (Not Shown)	
26	4360328	1	Switch, Toggle	
27	3790012	1	O-Ring	
28	1001196637	1	Decal - Fuse Box	

FIGURE 2-27. ELECTRICAL INSTALLATION - 460SJ (SN 0300250356 through 0300272360, SN E300006810 through E300007988)

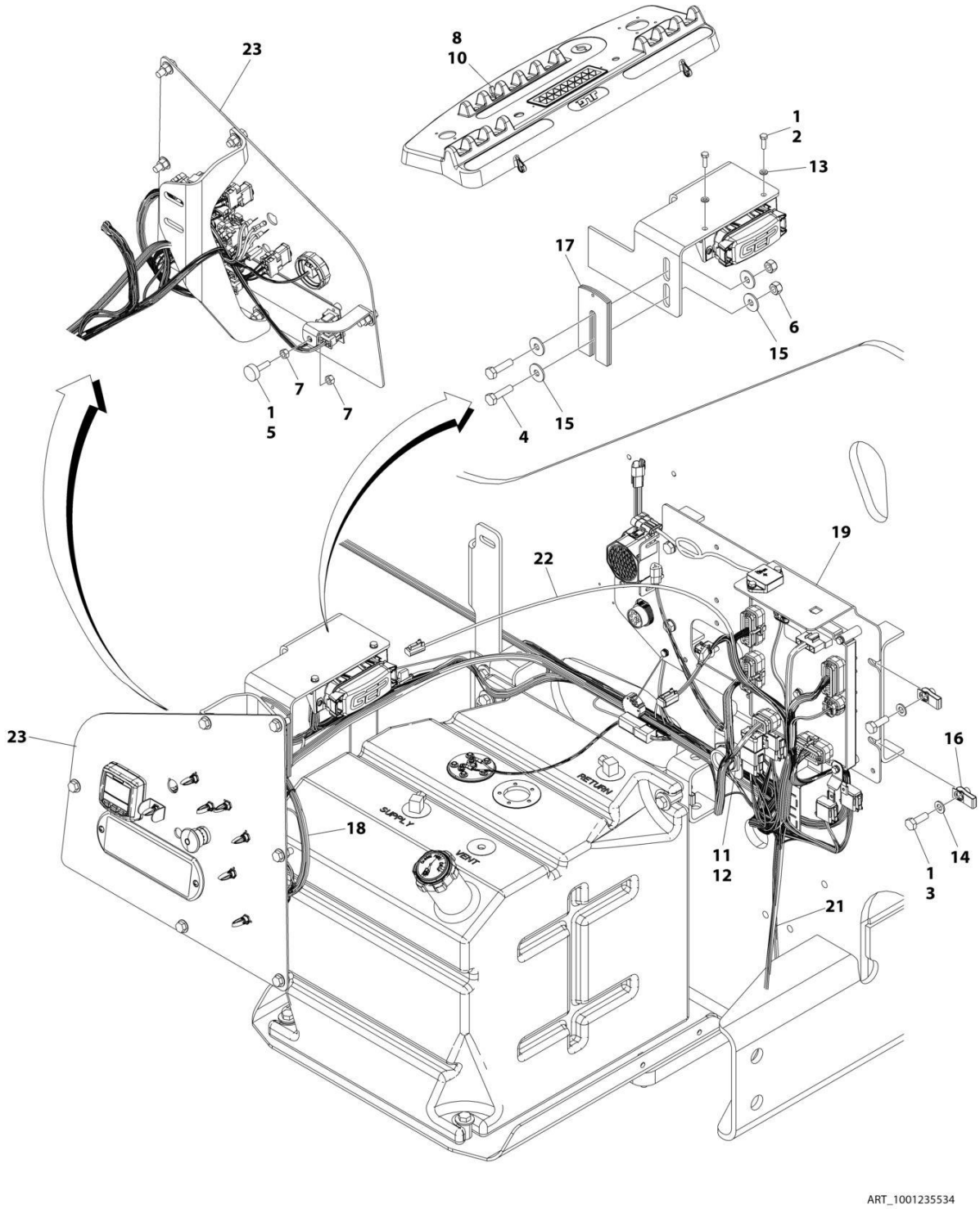

FIGURE 2-27. ELECTRICAL INSTALLATION - 460SJ (SN 0300250356 through 0300272360, SN E300006810 through E300007988)

ITEM	PART NUMBER	QTY	DESCRIPTION	REV
	1001235534	Rev	ELECTRICAL INSTALLATION	B
1	0100011	AR	Compound, Locking	
2	0760610	2	Bolt M6 x 20	
3	0761014	4	Bolt M10 x 30	
4	0761016	2	Bolt M10 x 40	
5	0940049	1	Stopper, Hood	
6	3291005	2	Nut M10	
7	3311501	2	Nut 5/16	
8	3790012	1	O-Ring	
9	4240099	AR	Tie-Strap (Not Shown)	
10	4360328	1	Switch, Toggle	
11	4460470	2	Nut, Terminal	
12	4460471	2	Washer, Terminal	
13	4811700	2	Washer M6	
14	4812000	4	Washer M10	
15	4812002	4	Washer M10	
16	1001118972	4	Nut M10	
17	1001150324	AR	Shim 3	
18	1001166964	1	Ground Control Box Harness (See ELECTRICAL SECTION for Breakdown)	
19	1001172757	1	Electrical Panel Assembly (See ELECTRICAL PANEL ASSEMBLY for Breakdown)	
20	1001196637	1	Decal - Fuse Box (Not Shown)	
21	1001166963	1	Valve Harness (See ELECTRICAL SECTION for Breakdown)	
22	1001164818	1	Turntable Harness (See ELECTRICAL SECTION for Breakdown)	
23	1001235533	1	Mount, Ground Control	

FIGURE 2-28. ELECTRICAL INSTALLATION - 460SJ (ANSI AND CSA SPECS) (SN 0300203771 through 0300250355)

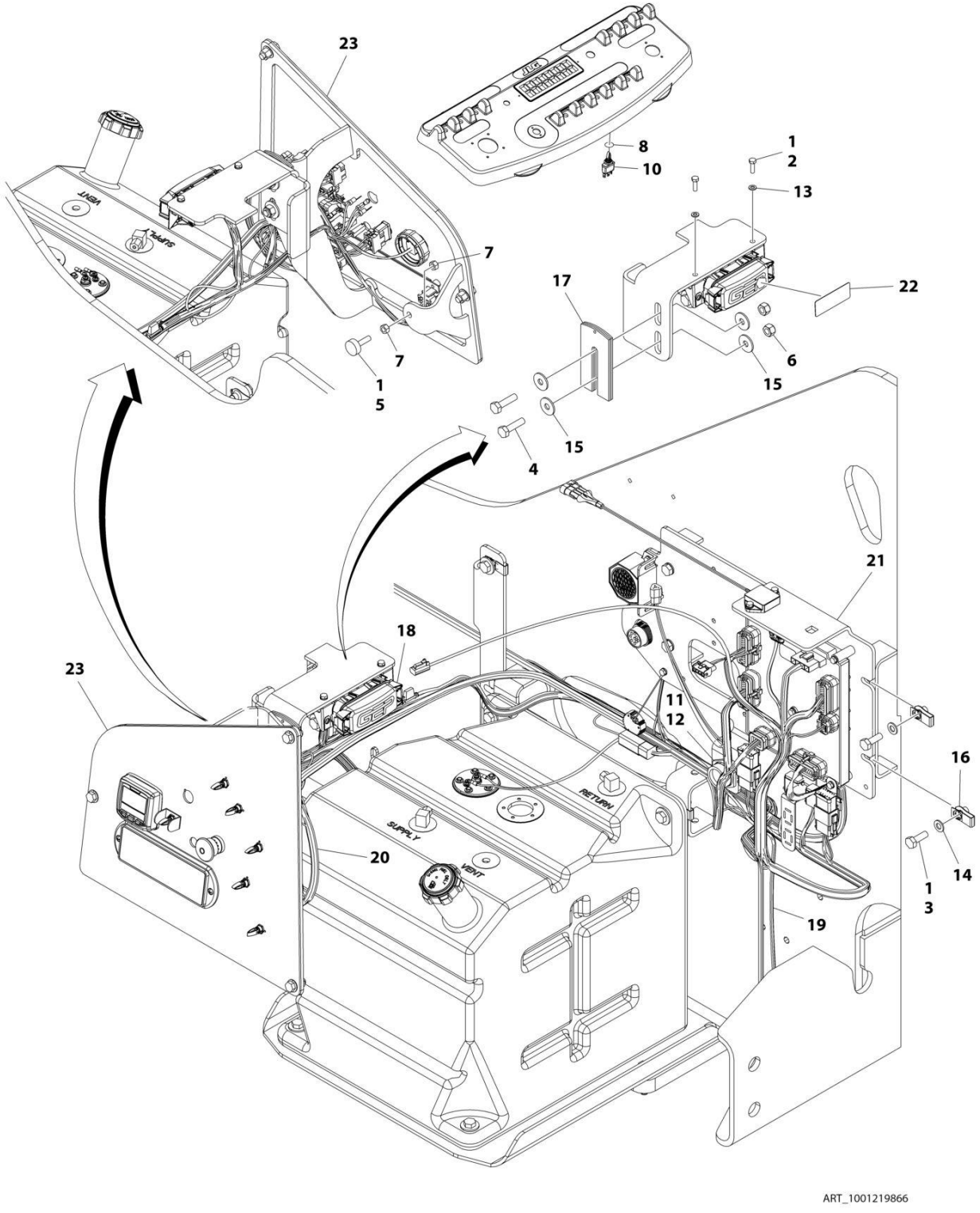

FIGURE 2-28. ELECTRICAL INSTALLATION - 460SJ (ANSI AND CSA SPECS) (SN 0300203771 through 0300250355)

ITEM	PART NUMBER	QTY	DESCRIPTION	REV
	1001219866	Ref	ELECTRICAL INSTALLATION - 460SJ (ANSI AND CSA SPECS)	A
1	0100011	AR	Compound, Locking	
2	0760610	2	Bolt M6 x 20	
3	0761014	4	Bolt M10 x 30	
4	0761016	2	Bolt M10 x 40	
5	0940049	1	Stopper, Hood	
6	3291005	2	Nut M10	
7	3311501	2	Nut 5/16	
8	3790012	1	O-Ring	
9	4240099	AR	Tie-Strap (Not Shown)	
10	4360328	1	Switch, Toggle	
11	4460470	2	Nut, Terminal	
12	4460471	2	Washer, Terminal	
13	4811700	2	Washer M6	
14	4812000	4	Washer M10	
15	4812002	4	Washer M10	
16	1001118972	4	Nut M10	
17	1001150324	AR	Shim 3	
18	1001164818	1	Turntable Harness (See ELECTRICAL SECTION for Breakdown)	
19	1001166963	1	Valve Harness (See ELECTRICAL SECTION for Breakdown)	
20	1001166964	1	Ground Control Box Harness (See ELECTRICAL SECTION for Breakdown)	
21	1001172757	1	Electrical Panel Assembly (See ELECTRICAL PANEL ASSEMBLY for Breakdown)	
22	1001196637	1	Decal - Fuse Box	
23	1001220287	1	Ground Control Assembly (See GROUND CONTROL ASSEMBLY - 460SJ (ANSI AND CSA SPECS) for Breakdown)	

FIGURE 2-29. ELECTRICAL INSTALLATION - 460SJ (ANSI AND CSA SPECS) (SN 0300250356 through 0300272360)

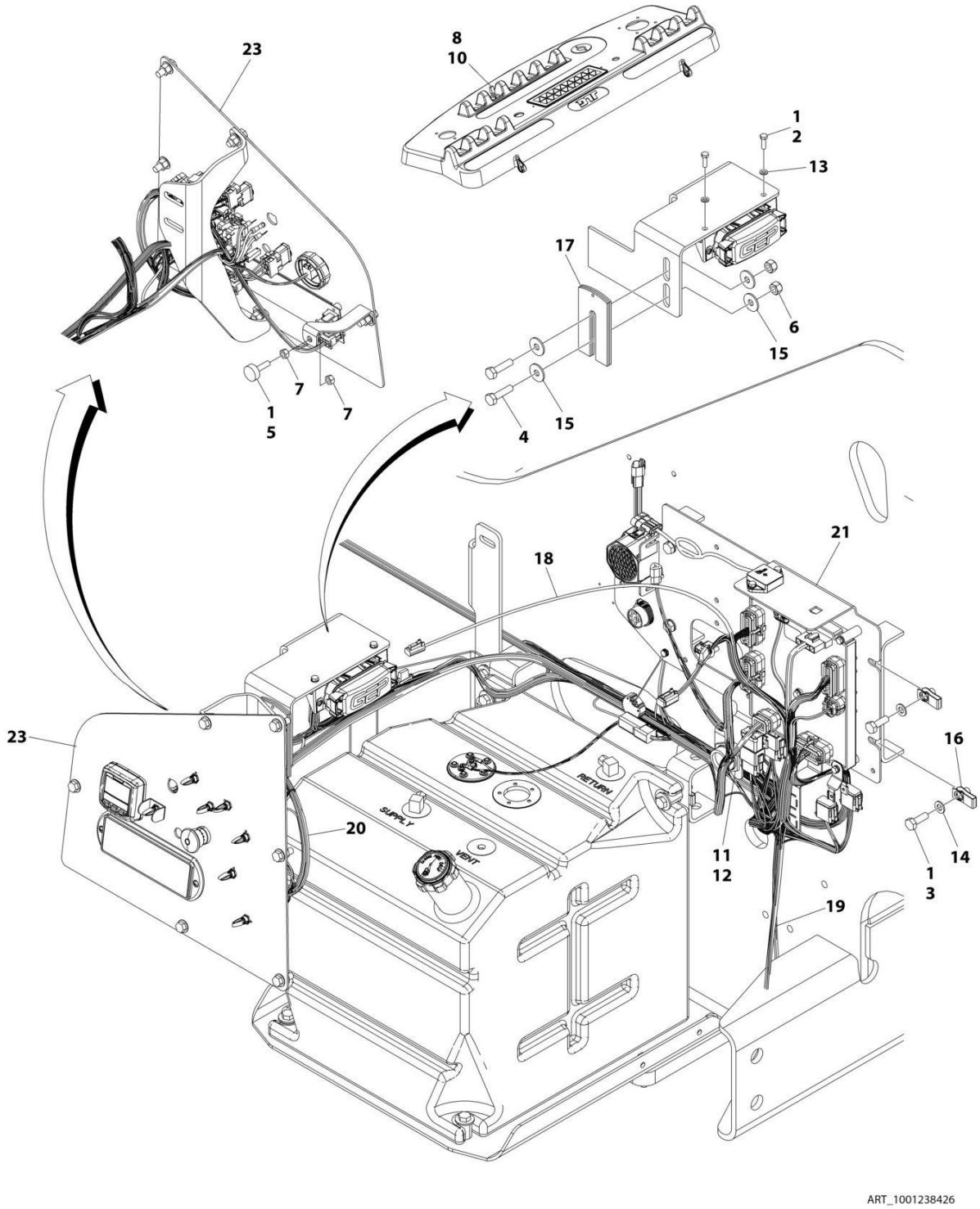

FIGURE 2-29. ELECTRICAL INSTALLATION - 460SJ (ANSI AND CSA SPECS) (SN 0300250356 through 0300272360)

ITEM	PART NUMBER	QTY	DESCRIPTION	REV
	1001238426	Rev	ELECTRICAL INSTALLATION - 460SJ	B
1	0100011	AR	Compound, Locking	
2	0760610	2	Bolt M6 x 20	
3	0761014	4	Bolt M10 x 30	
4	0761016	2	Bolt M10 x 40	
5	0940049	1	Stopper, Hood	
6	3291005	2	Nut M10	
7	3311501	2	Nut 5/16	
8	3790012	1	O-Ring	
9	4240099	AR	Tie-Strap (Not Shown)	
10	4360328	1	Switch, Toggle	
11	4460470	2	Nut, Terminal	
12	4460471	2	Washer, Terminal	
13	4811700	2	Washer M6	
14	4812000	4	Washer M10	
15	4812002	4	Washer M10	
16	1001118972	4	Nut M10	
17	1001150324	AR	Shim 3	
18	1001164818	1	Turntable Harness (See ELECTRICAL SECTION for Breakdown)	
19	1001166963	1	Valve Harness (See ELECTRICAL SECTION for Breakdown)	
20	1001166964	1	Ground Control Box Harness (See ELECTRICAL SECTION for Breakdown)	
21	1001172757	1	Electrical Panel Assembly (See ELECTRICAL PANEL ASSEMBLY for Breakdown)	
22	1001196637	1	Decal - Fuse Box (Not Shown)	
23	1001238889	1	Support, Ground Control	

FIGURE 2-30. ELECTRICAL PANEL ASSEMBLY

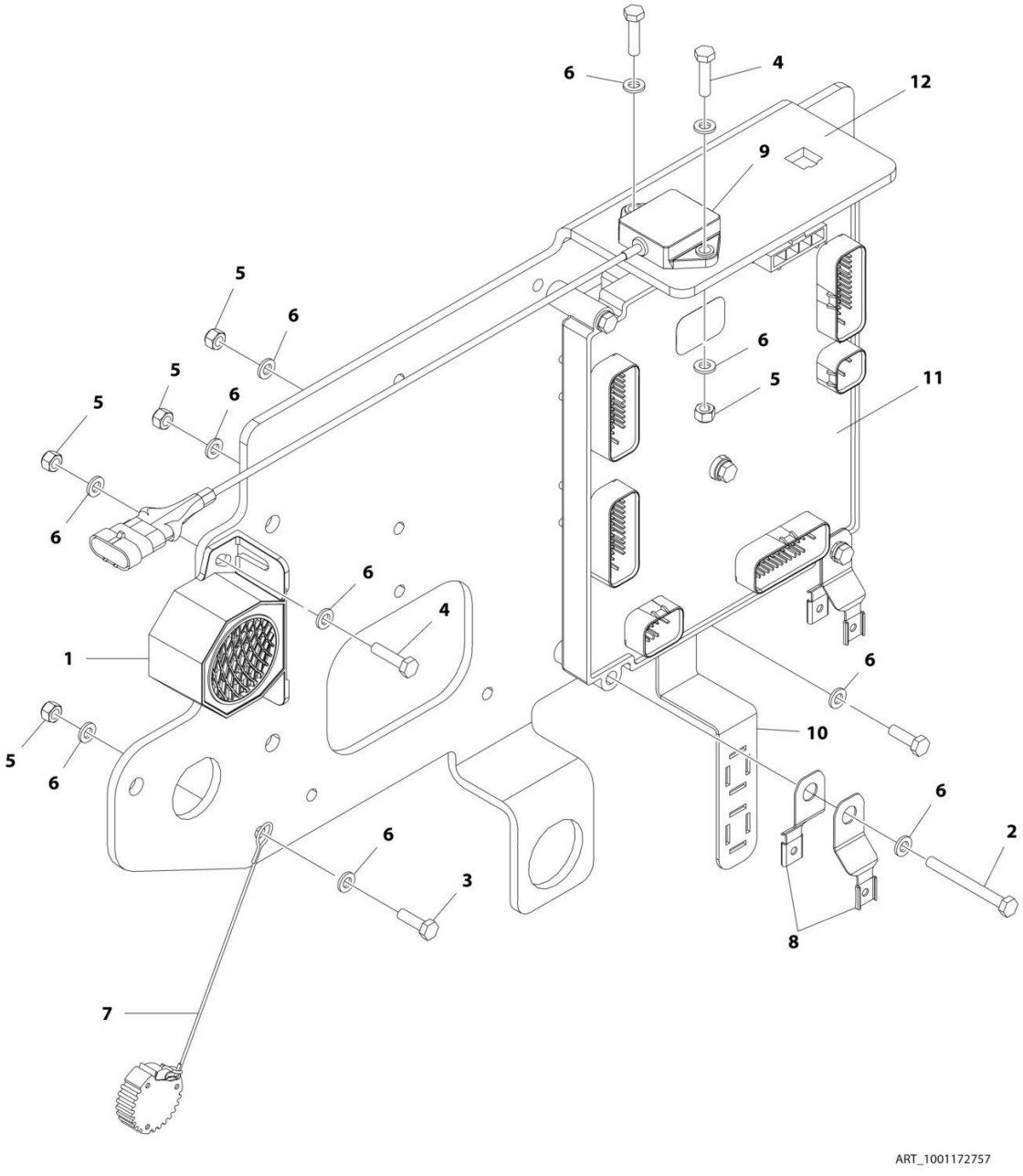

FIGURE 2-30. ELECTRICAL PANEL ASSEMBLY

ITEM	PART NUMBER	QTY	DESCRIPTION	REV
	1001172757	Ref	ELECTRICAL PANEL ASSEMBLY	E
1	0140043	1	Alarm	
1	4460536	1	Plug, Male - 3 Position	
1	4460943	3	Terminal	
2	0700620	5	Bolt M6 x 60	
3	0760610	2	Bolt M6 x 20	
4	0760612	4	Bolt M6 x 25	
5	3290605	11	Nut M6	
6	4811700	22	Washer M6	
7	1001106736	1	Cap, Dust	
8	1001120328	2	Clip, Mounting **(SN 0300203771 through 0300220006)**	
8	1001120328	4	Clip, Mounting **(SN 0300220007 through 0300272360, SN E300000100 through E300007988, SN 1300007289 through 130007393, Except SN 0300272174 through 0300272184, Excluding E300007847)**	
9	1001181325	1	Sensor **(SN 0300203771 through 0300243702, SN E300000100 through E300005370, SN 1300007289 through 130007393)**	
9	1001219601	1	Sensor **(SN 0300243703 through 0300272360, SN E300005371 through E300007988, Except SN 0300272174 through 0300272184, Excluding E300007847)**	
10	1001159162	1	Bracket	
11	1001170094	1	Module, Ground Control	
		Ref	Note: Re-calibration Required when Replaced.	
12	1001172756	1	Plate **(SN 0300203771 through 0300220006)**	
12	1001215373	1	Plate **(SN 0300220007 through 0300272360, SN E300000100 through E300007988, SN 1300007289 through 130007393, Except SN 0300272174 through 0300272184, Excluding E300007847)**	

FIGURE 2-31. GROUND CONTROL ASSEMBLY - 400S (ALL SPECS EXCEPT AUSTRALIAN SPEC) (SN 0300203771 through 0300250355)

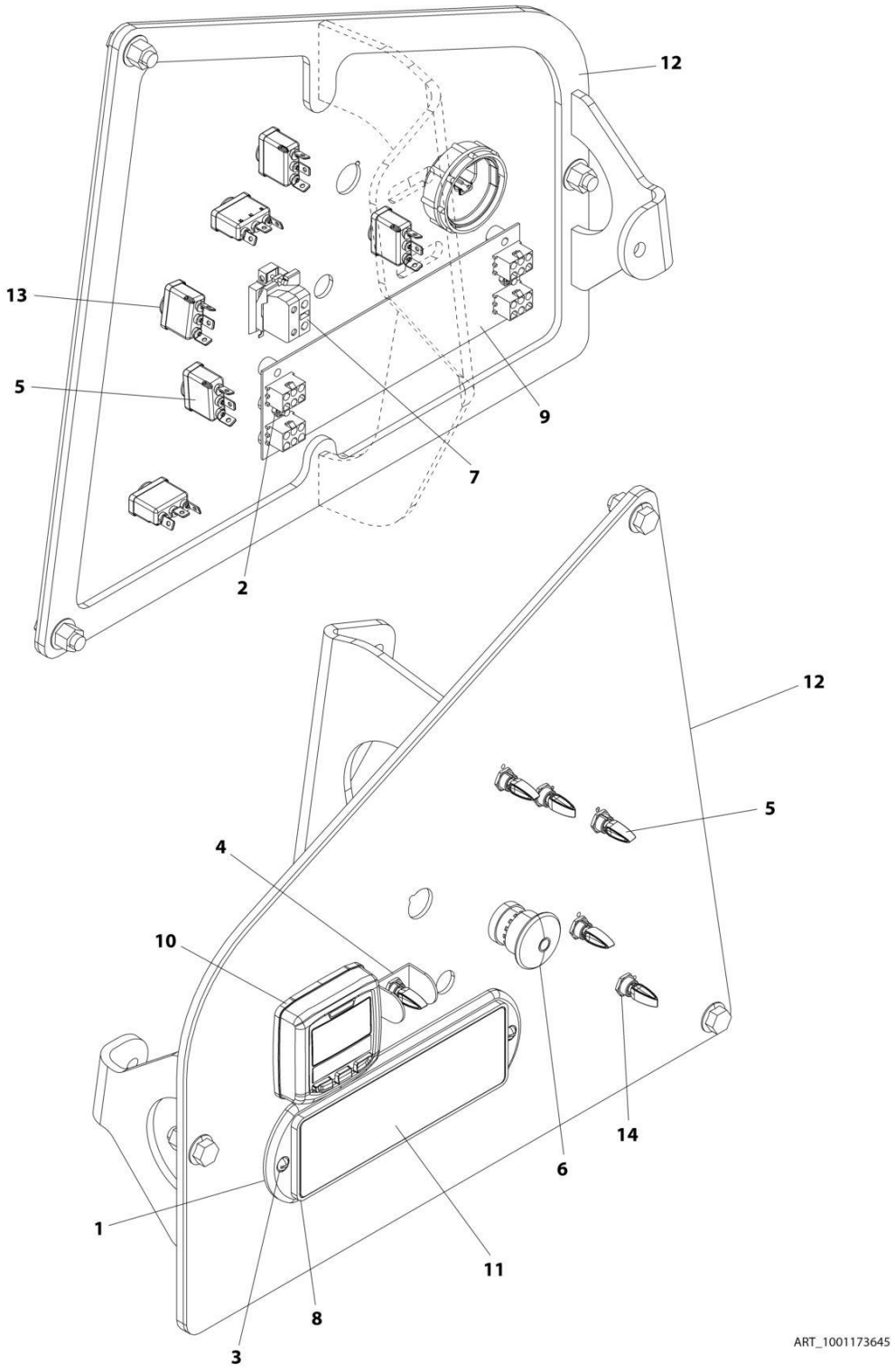

FIGURE 2-31. GROUND CONTROL ASSEMBLY - 400S (ALL SPECS EXCEPT AUSTRALIAN SPEC) (SN 0300203771 through 0300250355)

ITEM	PART NUMBER	QTY	DESCRIPTION	REV
	1001173645	Ref	GROUND CONTROL ASSEMBLY - 400S	C
1	1671176	1	Cover **(SN 0300203771 through 0300211863)**	
1	1670829	1	Cover **(SN 0300211863 through 0300250355)**	
2	3300408	2	Nut	
3	3911018	2	Screw #10 x 1-1/8	
4	4060906	1	Guard, Switch	
5	1001155045	6	Switch, Toggle	
6	4360475	1	Switch, Emergency Stop	
6	7020175	1	Cap	
6	7020176	1	Block, Contact	
7	4360476	1	Block, Contact	
8	1001146220	1	Housing, Display	
9	1001170838	1	Panel, LED	
10	1001171482	1	Gauge	
11	1001173529	1	Panel, Display	
12	1001173644	1	Panel, Ground Control (Note: See Keyswitch Installations for Panel Decal call-out)	
13	1001155043	6	Washer	
14	1001155044	6	Nut 15/32	

FIGURE 2-32. GROUND CONTROL ASSEMBLY - 400S (SN 0300250356 through 0300272360)

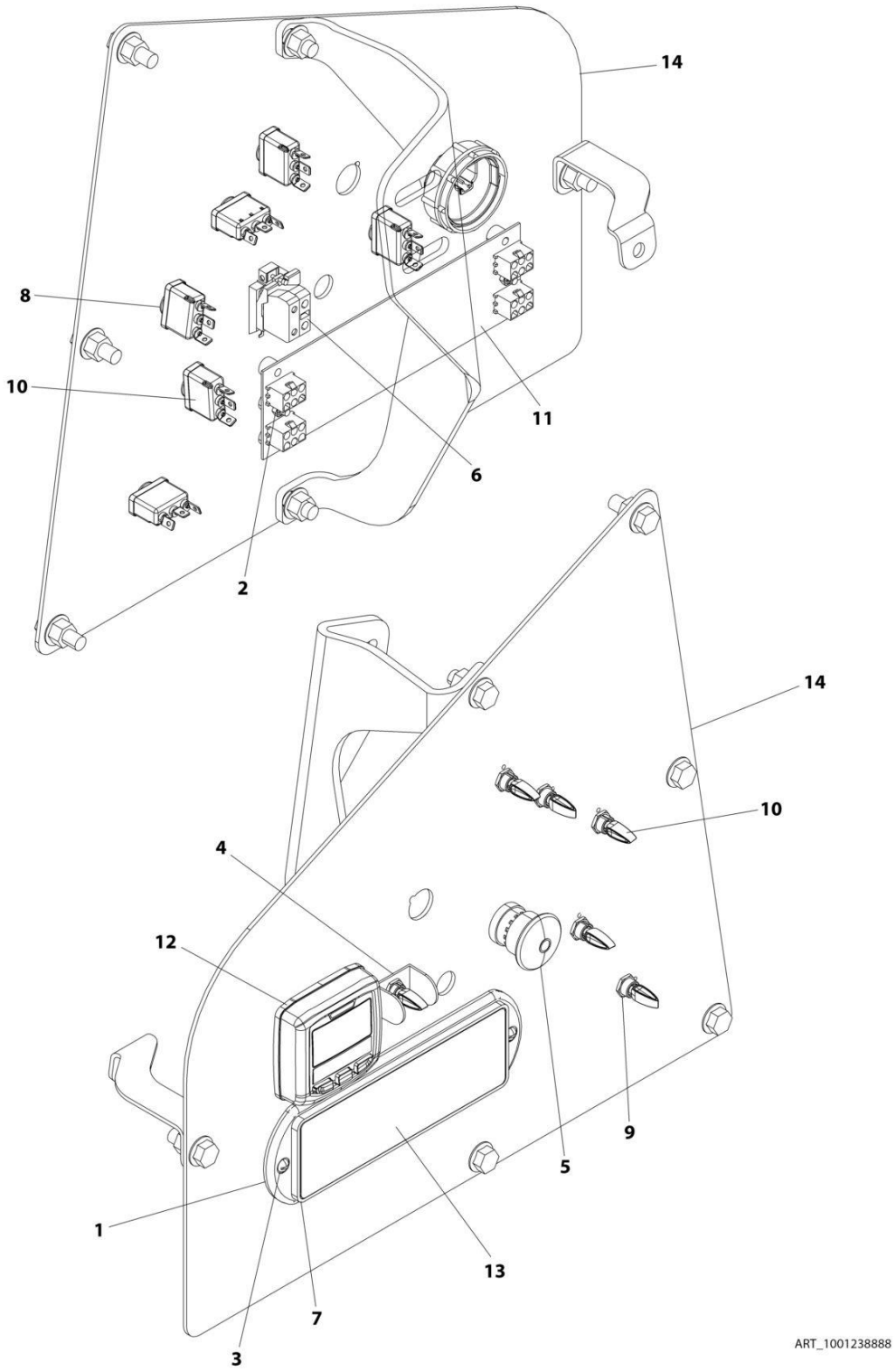

FIGURE 2-32. GROUND CONTROL ASSEMBLY - 400S (SN 0300250356 through 0300272360)

ITEM	PART NUMBER	QTY	DESCRIPTION	REV
	1001238888	Ref	GROUND CONTROL ASSEMBLY	B
1	1670829	1	Cover	
2	3300408	2	Nut	
3	3911018	2	Screw #10 x 1-1/8	
4	4060906	1	Guard, Switch	
5	4360475	1	Switch, Emergency Stop	
6	4360476	1	Block, Contact	
7	1001146220	1	Housing, Display	
8	1001155043	6	Washer	
9	1001155044	6	Nut 15/32	
10	1001155045	6	Switch, Toggle	
11	1001170838	1	Panel, LED	
12	1001171482	1	Gauge	
13	1001173529	1	Panel, Display	
14	1001238887	1	Mount, Ground Control Panel	

FIGURE 2-33. GROUND CONTROL ASSEMBLY - 400S (ANSI AND CSA SPECS) (SN 0300250356 through 0300272360)

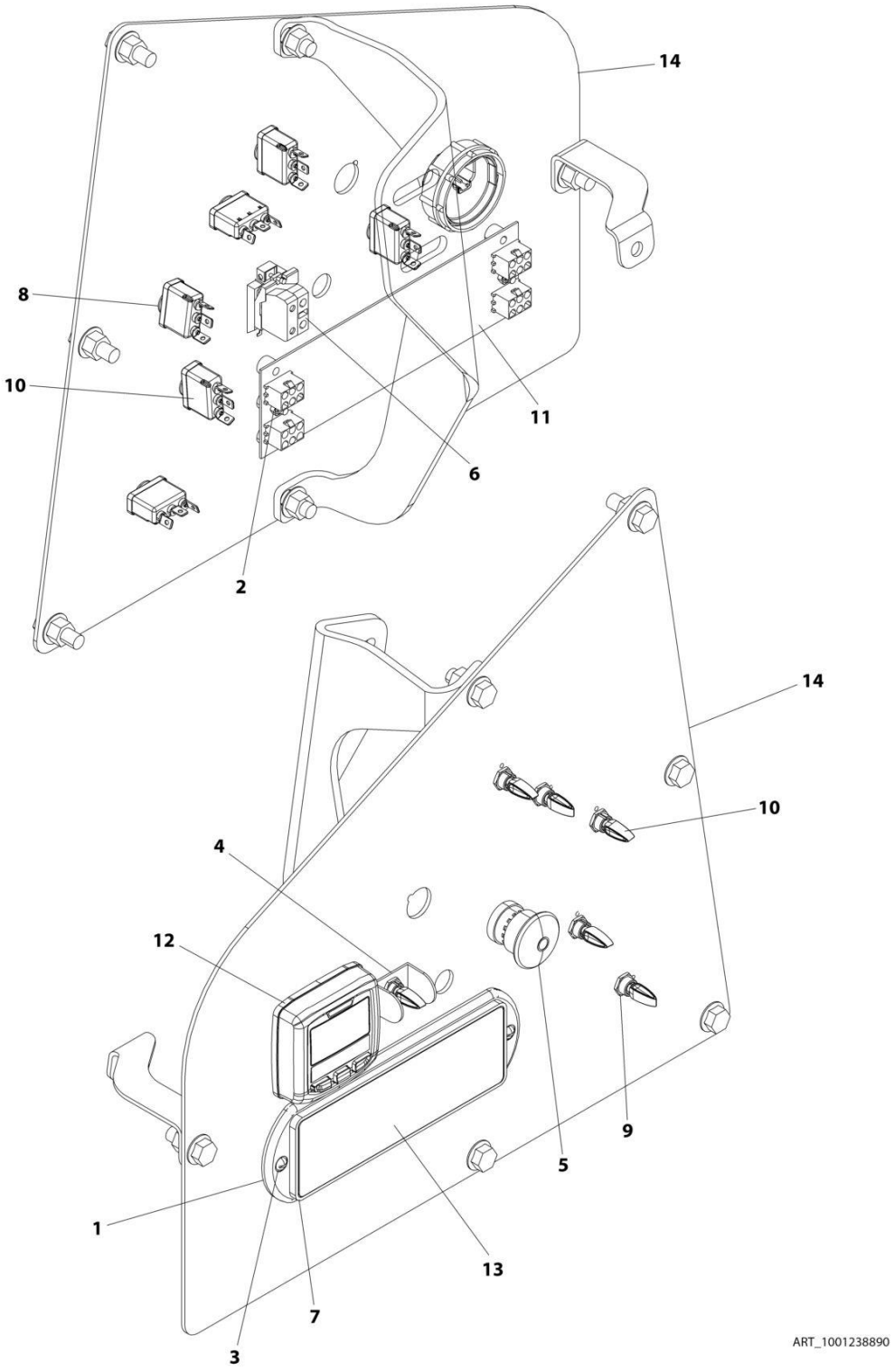

FIGURE 2-33. GROUND CONTROL ASSEMBLY - 400S (ANSI AND CSA SPECS) (SN 0300250356 through 0300272360)

ITEM	PART NUMBER	QTY	DESCRIPTION	REV
	1001238890	Ref	GROUND CONTROL ASSEMBLY	A
1	1670829	1	Cover	
2	3300408	2	Nut	
3	3911018	2	Screw #10 x 1-1/8	
4	4060906	1	Guard, Switch	
5	4360475	1	Switch, Emergency Stop	
6	4360476	1	Block, Contact	
7	1001146220	1	Housing, Display	
8	1001155043	6	Washer	
9	1001155044	6	Nut 15/32	
10	1001155045	6	Switch, Toggle	
11	1001170838	1	Panel, LED	
12	1001171482	1	Gauge	
13	1001216407	1	Decal - Display Panel	
14	1001238887	1	Mount, Ground Control Panel	

FIGURE 2-34. GROUND CONTROL ASSEMBLY - 400S (ANSI AND CSA SPECS)

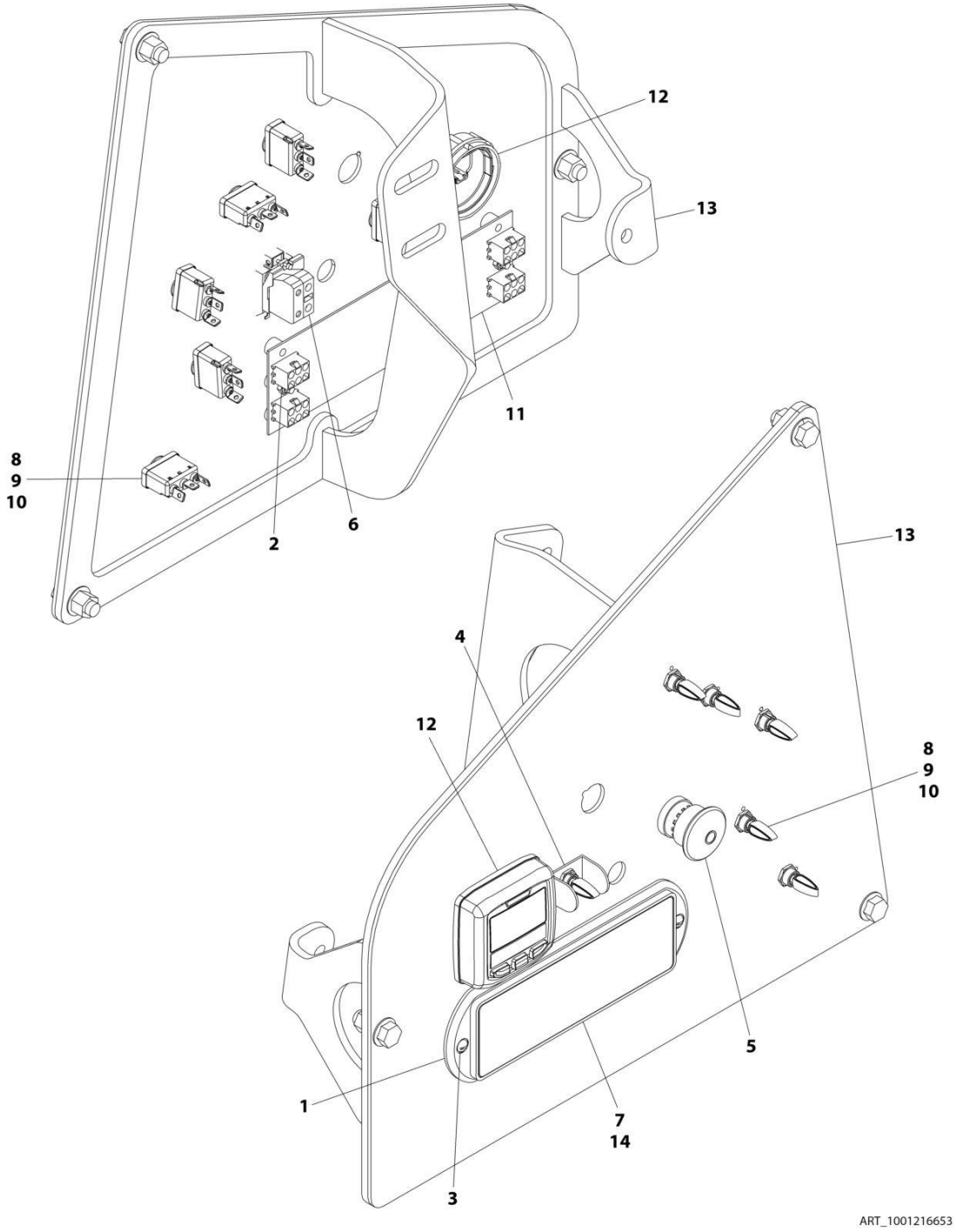

FIGURE 2-34. GROUND CONTROL ASSEMBLY - 400S (ANSI AND CSA SPECS)

ITEM	PART NUMBER	QTY	DESCRIPTION	REV
	1001216653	Ref	GROUND CONTROL ASSEMBLY - 400S (ANSI AND CSA SPECS)	A
1	1670829	1	Cover	
2	3300408	2	Nut	
3	3911018	2	Screw #10 x 1-1/8	
4	4060906	1	Guard, Switch	
5	4360475	1	Switch, Emergency Stop	
5	7020175	1	Cap	
5	7020176	1	Block, Contact	
6	4360476	1	Block, Contact	
7	1001146220	1	Housing, Display	
8	1001155043	6	Washer	
9	1001155044	6	Nut 15/32	
10	1001155045	6	Switch, Toggle	
11	1001170838	1	Panel, LED	
12	1001171482	1	Gauge	
13	1001173644	1	Panel, Ground Control (Note: See Keyswitch Installations for Panel Decal call-out)	
14	1001216407	1	Decal - Display Panel	

FIGURE 2-35. GROUND CONTROL ASSEMBLY - 460SJ (SN 0300203771 through 0300250355, SN E300000100 through E300006809)

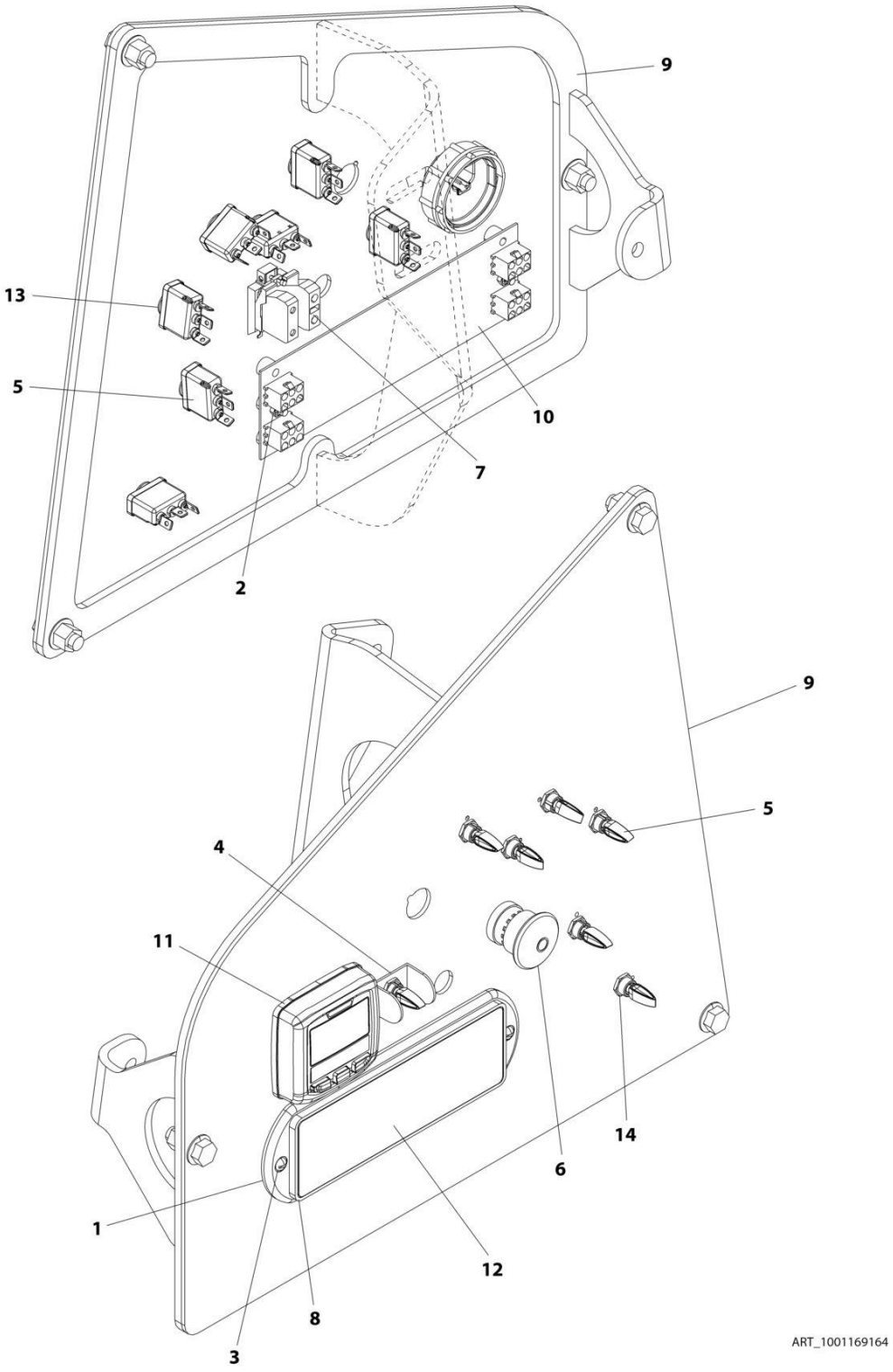

FIGURE 2-35. GROUND CONTROL ASSEMBLY - 460SJ (SN 0300203771 through 0300250355, SN E300000100 through E300006809)

ITEM	PART NUMBER	QTY	DESCRIPTION	REV
	1001169164	Ref	GROUND CONTROL ASSEMBLY - 460SJ	C
1	1671176	1	Cover **(SN 0300203771 through 0300211862)**	
1	1670829	1	Cover **(SN 0300211863 through 0300250355, SN E300000100 through E300006809)**	
2	3300408	2	Nut	
3	3911018	2	Screw #10 x 1-1/8	
4	4060906	1	Guard, Switch	
5	1001155045	7	Switch, Toggle	
6	4360475	1	Switch, Emergency Stop	
6	7020175	1	Cap	
6	7020176	1	Block, Contact	
7	4360476	1	Block, Contact	
8	1001146220	1	Housing, Display	
9	1001169163	1	Panel, Ground Control (Note: See Keyswitch Installations for Panel Decal call-out)	
10	1001170838	1	Panel, LED	
11	1001171482	1	Gauge	
12	1001173529	1	Panel, Display	
13	1001155043	7	Washer	
14	1001155044	7	Nut 15/32	

FIGURE 2-36. GROUND CONTROL ASSEMBLY - 460SJ (SN 0300250356 through 0300272360, SN E300006810 through E300007988)

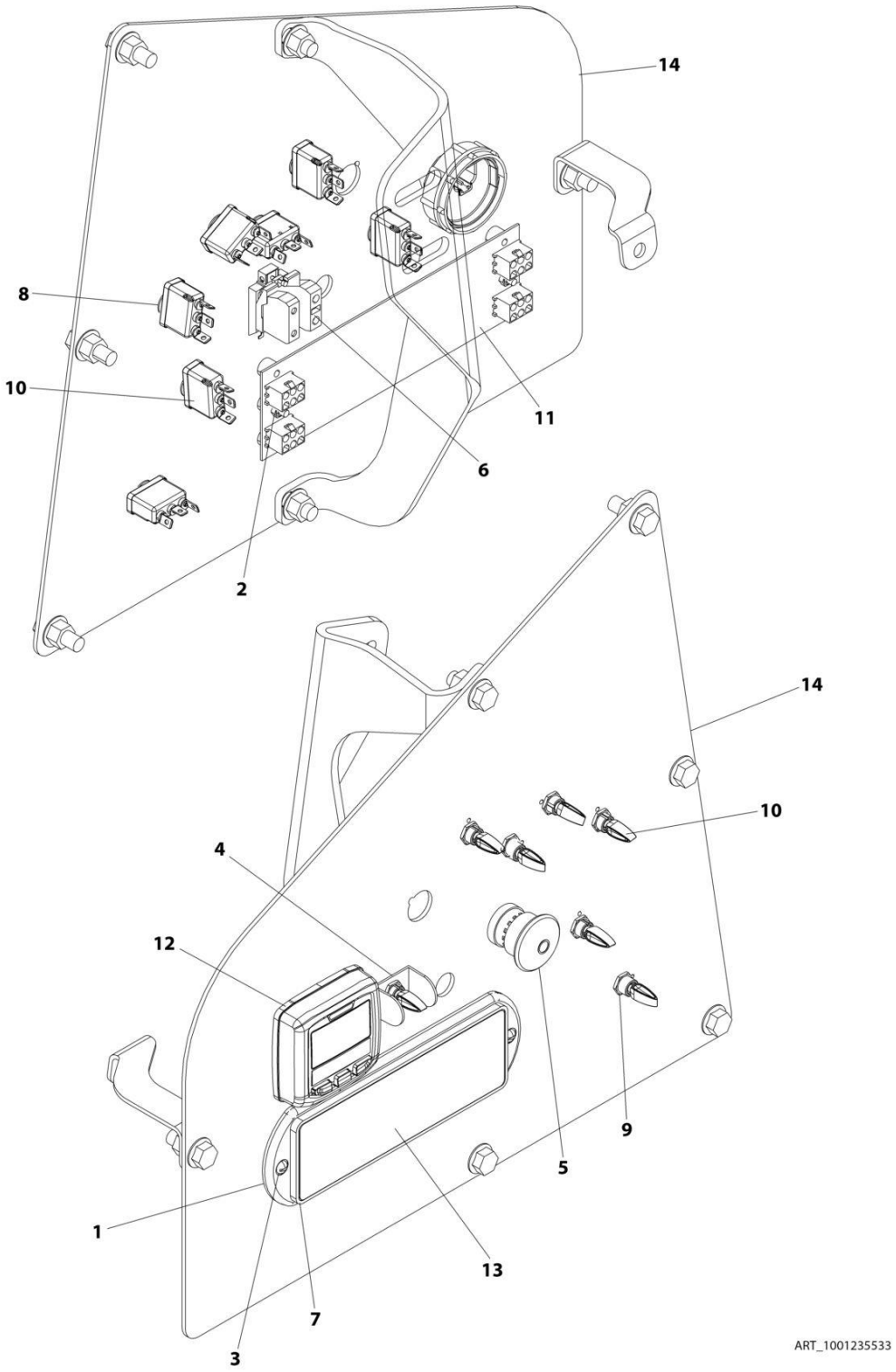

FIGURE 2-36. GROUND CONTROL ASSEMBLY - 460SJ (SN 0300250356 through 0300272360, SN E300006810 through E300007988)

ITEM	PART NUMBER	QTY	DESCRIPTION	REV
	1001235533	Ref	GROUND CONTROL ASSEMBLY	A
1	1670829	1	Cover	
2	3300408	2	Nut	
3	3911018	2	Screw #10 x 1-1/8	
4	4060906	1	Guard, Switch	
5	4360475	1	Switch, Emergency Stop	
6	4360476	1	Block, Contact	
7	1001146220	1	Housing, Display	
8	1001155043	7	Washer	
9	1001155044	7	Nut 15/32	
10	1001155045	7	Switch, Toggle	
11	1001170838	1	Panel, LED	
12	1001171482	1	Gauge	
13	1001173529	1	Panel, Display	
14	1001235531	1	Mount, Ground Control Panel	

FIGURE 2-37. GROUND CONTROL ASSEMBLY - 460SJ (ANSI AND CSA SPECS) (SN 0300203771 through 0300250355)

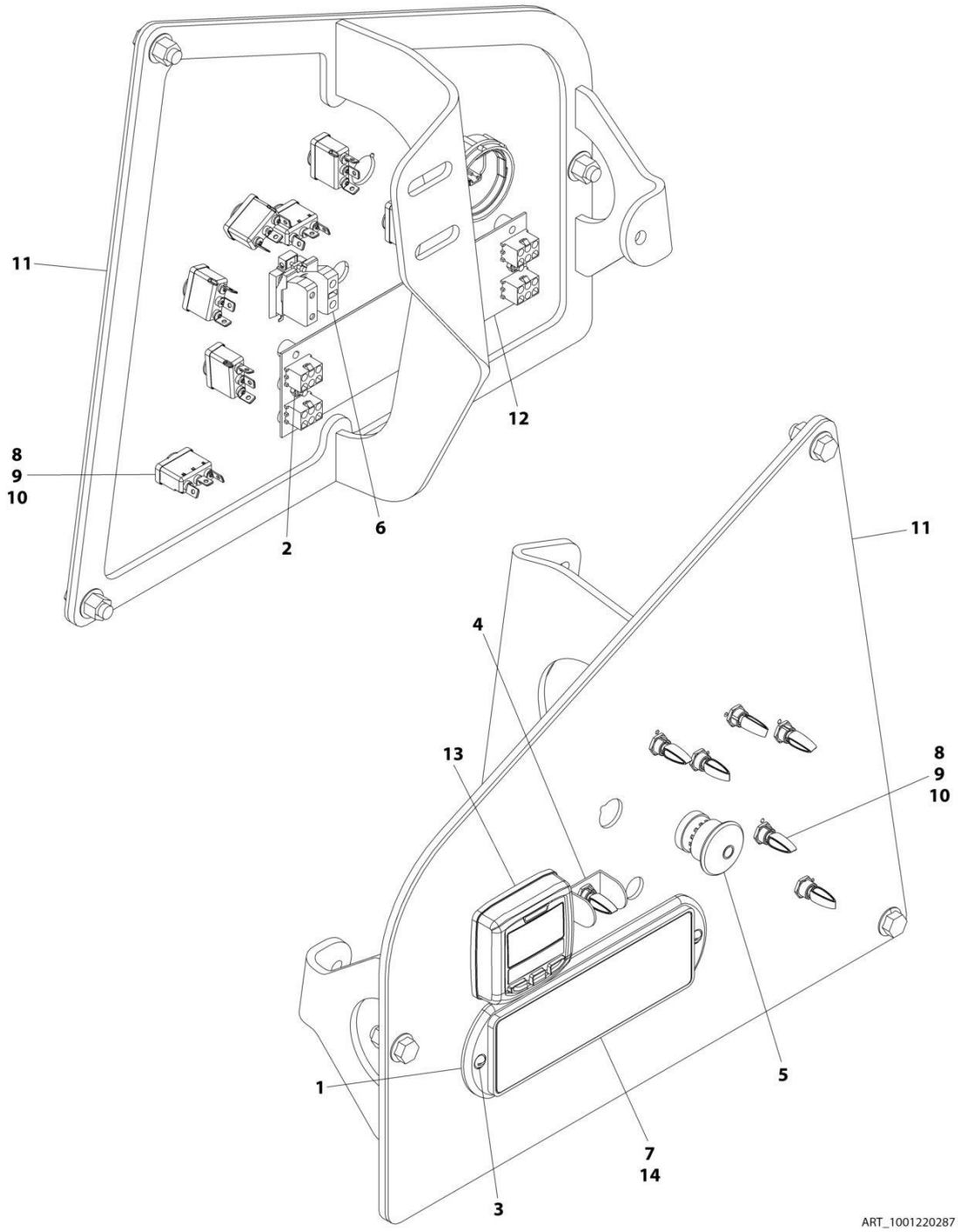

FIGURE 2-37. GROUND CONTROL ASSEMBLY - 460SJ (ANSI AND CSA SPECS) (SN 0300203771 through 0300250355)

ITEM	PART NUMBER	QTY	DESCRIPTION	REV
	1001220287	Ref	GROUND CONTROL ASSEMBLY - 460SJ (ANSI AND CSA SPECS)	A
1	1670829	1	Cover	
2	3300408	2	Nut	
3	3911018	2	Screw #10 x 1-1/8	
4	4060906	1	Guard, Switch	
5	4360475	1	Switch, Emergency Stop	
5	7020175	1	Cap	
5	7020176	1	Block, Contact	
6	4360476	1	Block, Contact	
7	1001146220	1	Housing, Display	
8	1001155043	7	Washer	
9	1001155044	7	Nut 15/32	
10	1001155045	7	Switch, Toggle	
11	1001169163	1	Panel, Ground Control (Note: See Keyswitch Installations for Panel Decal call-out)	
12	1001170838	1	Panel, LED	
13	1001171482	1	Gauge	
14	1001216407	1	Decal - Display Panel	

FIGURE 2-38. GROUND CONTROL ASSEMBLY - 460SJ (ANSI AND CSA SPECS) (SN 0300250356 through 0300272360)

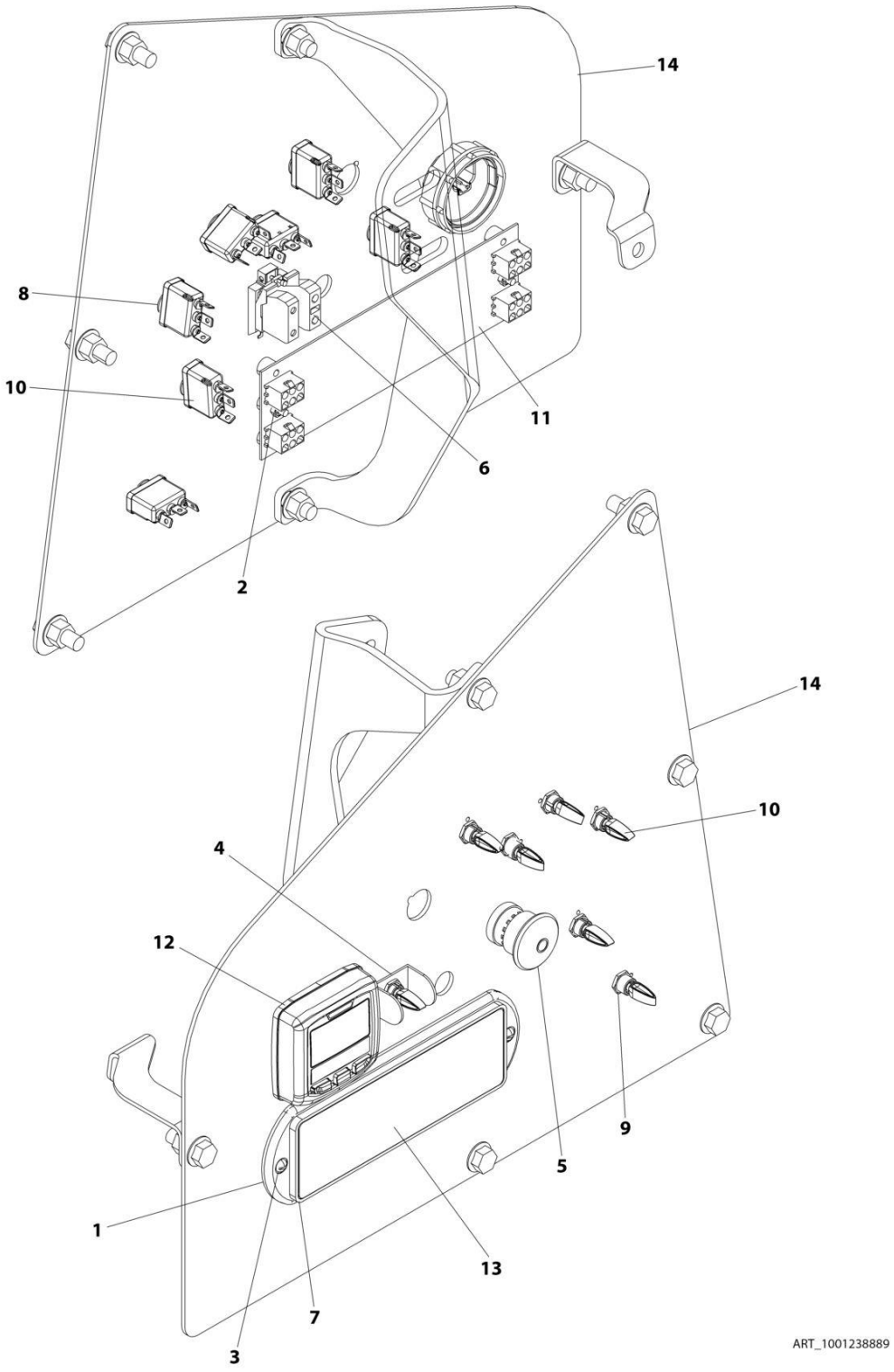

FIGURE 2-38. GROUND CONTROL ASSEMBLY - 460SJ (ANSI AND CSA SPECS) (SN 0300250356 through 0300272360)

ITEM	PART NUMBER	QTY	DESCRIPTION	REV
	1001238889	Ref	GROUND CONTROL ASSEMBLY	B
1	1670829	1	Cover	
2	3300408	2	Nut	
3	3911018	2	Screw #10 x 1-1/8	
4	4060906	1	Guard, Switch	
5	4360475	1	Switch, Emergency Stop	
6	4360476	1	Block, Contact	
7	1001146220	1	Housing, Display	
8	1001155043	7	Washer	
9	1001155044	7	Nut 15/32	
10	1001155045	7	Switch, Toggle	
11	1001170838	1	Panel, LED	
12	1001171482	1	Gauge	
13	1001216407	1	Decal - Display Panel	
14	1001235531	1	Mount, Ground Control Panel	

FIGURE 2-39. GROUND CONTROL DECAL AND KEYSWITCH INSTALLATION - 400S (ALL SPECS EXCEPT CE SPEC)

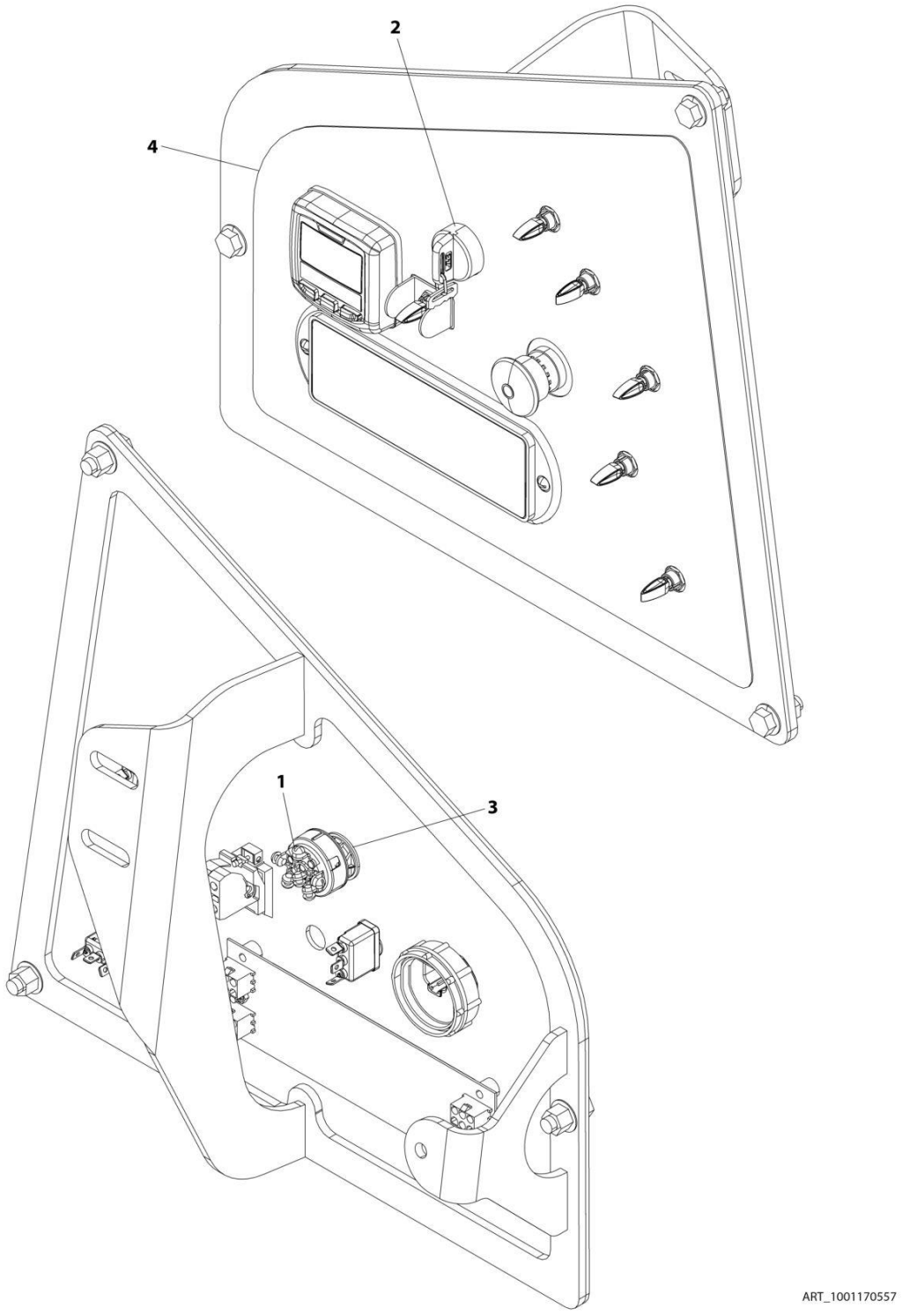

FIGURE 2-39. GROUND CONTROL DECAL AND KEYSWITCH INSTALLATION - 400S (ALL SPECS EXCEPT CE SPEC)

ITEM	PART NUMBER	QTY	DESCRIPTION	REV
	1001170557	Ref	GROUND CONTROL DECAL AND KEYSWITCH INSTALLATION - 400S (ALL SPECS EXCEPT CE SPEC)	B
1	3910804	6	Screw #8 x 1/4	
2	4360469	1	Switch, Key	
2	2860030	1	Key, Replacement	
3	1001151393	1	Shim .063	
4	1001173643	1	Decal - Ground Control	

FIGURE 2-40. GROUND CONTROL DECAL AND KEYSWITCH INSTALLATION - 400S (CE SPEC)

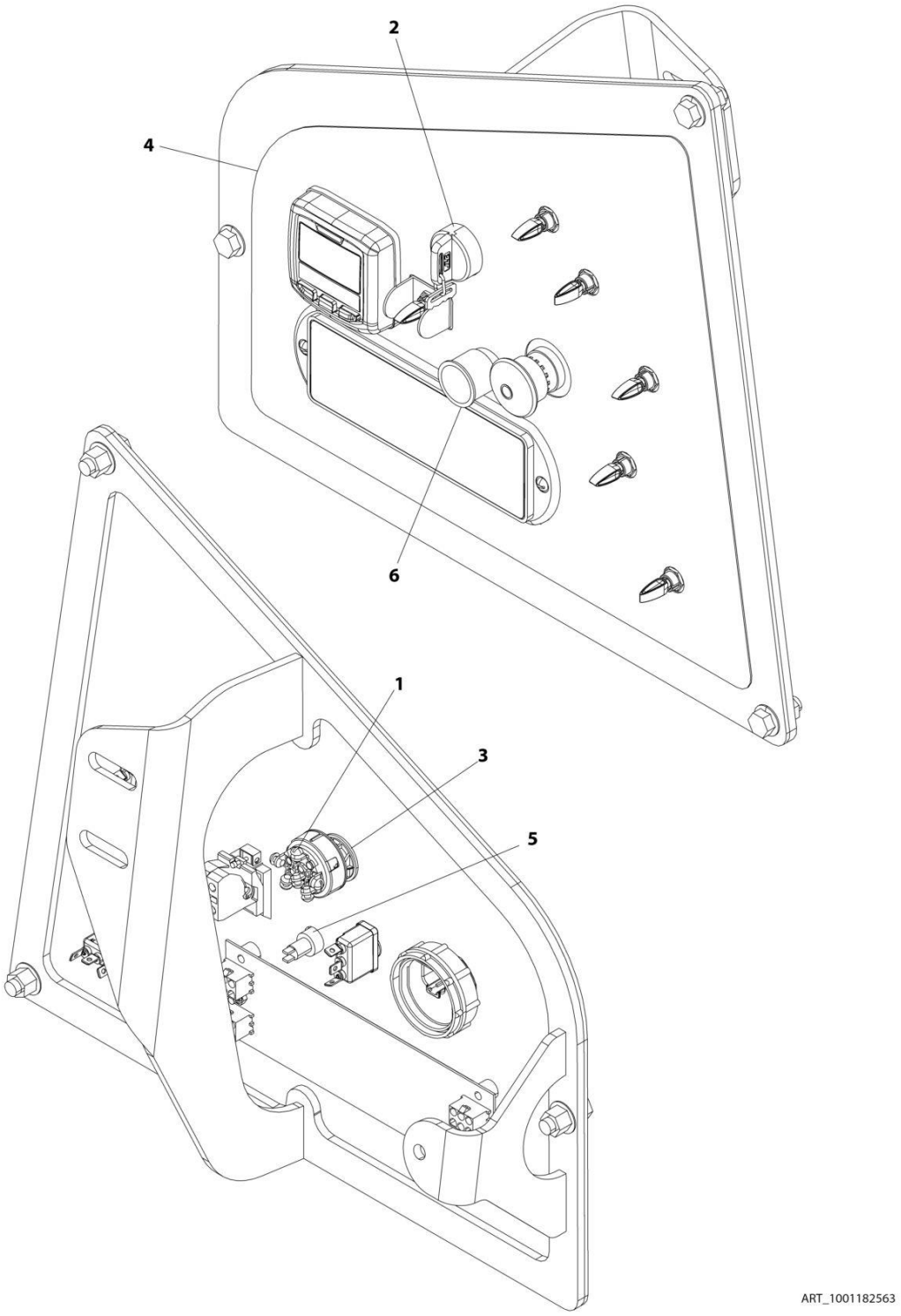

FIGURE 2-40. GROUND CONTROL DECAL AND KEYSWITCH INSTALLATION - 400S (CE SPEC)

ITEM	PART NUMBER	QTY	DESCRIPTION	REV
	1001182563	Ref	GROUND CONTROL DECAL AND KEYSWITCH INSTALLATION - 400S (CE SPEC)	A
1	3910804	6	Screw #8 x 1/4	
2	4360469	1	Switch, Key	
2	2860030	1	Key, Replacement	
3	1001151393	1	Shim .063	
4	1001182516	1	Decal - Ground Control	
5	4360387	1	Switch, Push Button	
6	1001176469	1	Shroud, Switch	

FIGURE 2-41. GROUND CONTROL DECAL AND KEYSWITCH INSTALLATION - 460SJ (ALL SPECS EXCEPT CE SPEC)

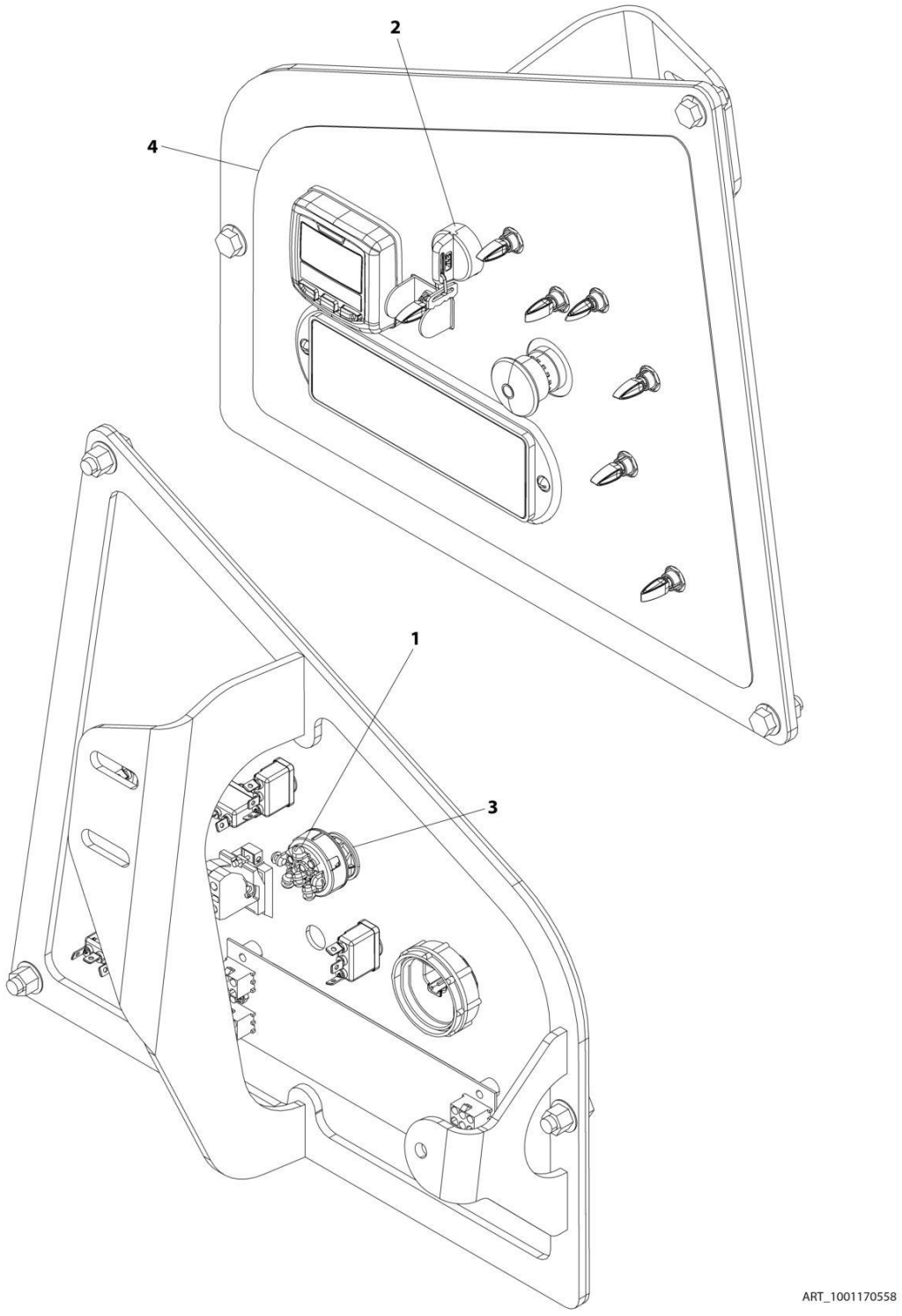

FIGURE 2-41. GROUND CONTROL DECAL AND KEYSWITCH INSTALLATION - 460SJ (ALL SPECS EXCEPT CE SPEC)

ITEM	PART NUMBER	QTY	DESCRIPTION	REV
	1001170558	Ref	GROUND CONTROL DECAL AND KEYSWITCH INSTALLATION - 460SJ (ALL SPECS EXCEPT CE SPEC)	B
1	3910804	6	Screw #8 x 1/4	
2	4360469	1	Switch, Key	
2	2860030	1	Key, Replacement	
3	1001151393	1	Shim .063	
4	1001172653	1	Decal - Ground Control	

FIGURE 2-42. GROUND CONTROL DECAL AND KEYSWITCH INSTALLATION - 460SJ (CE SPEC)

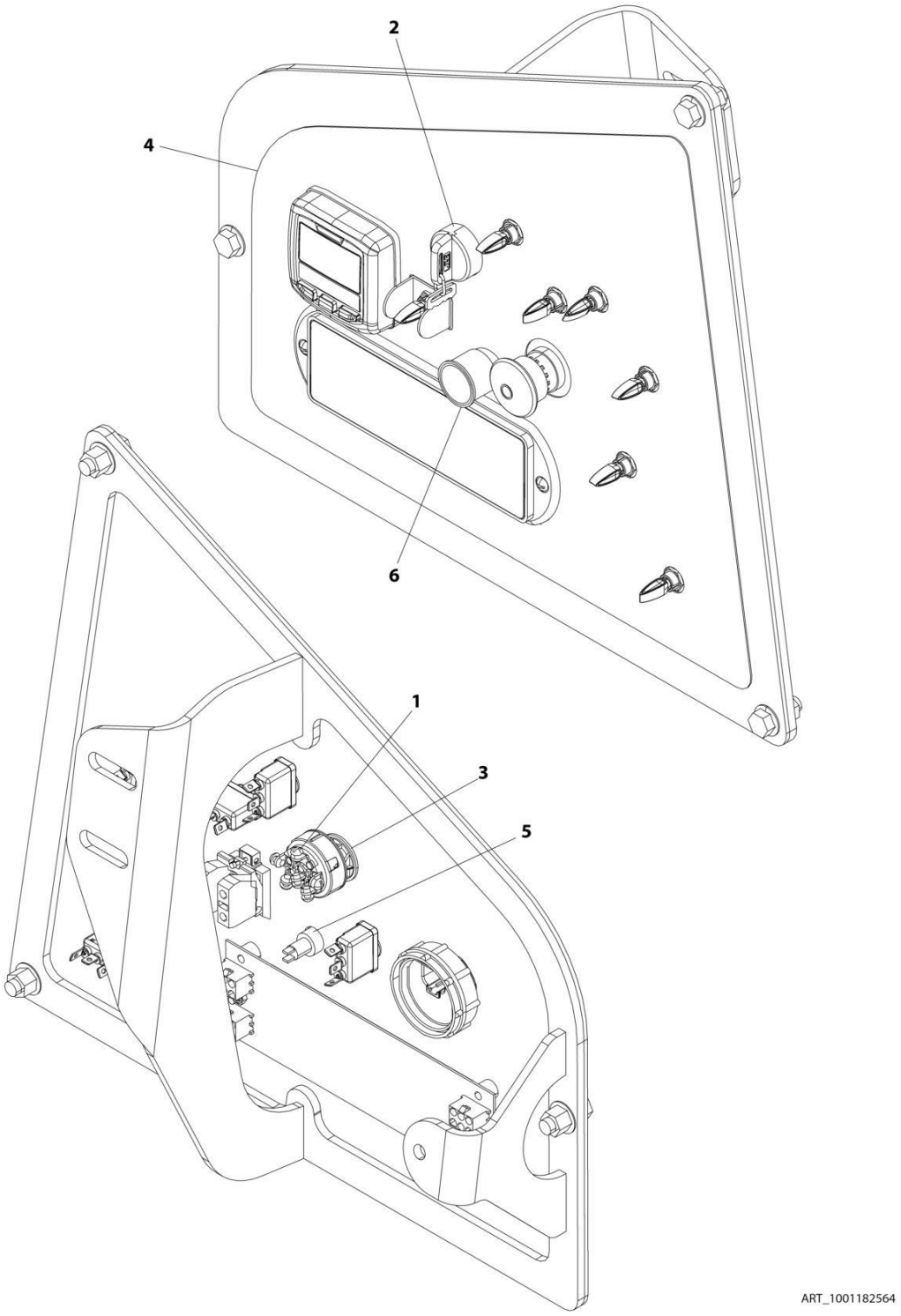

FIGURE 2-42. GROUND CONTROL DECAL AND KEYSWITCH INSTALLATION - 460SJ (CE SPEC)

ITEM	PART NUMBER	QTY	DESCRIPTION	REV
	1001182564	Ref	GROUND CONTROL DECAL AND KEYSWITCH INSTALLATION - 460SJ (CE SPEC)	A
1	3910804	6	Screw #8 x 1/4	
2	4360469	1	Switch, Key	
2	2860030	1	Key, Replacement	
3	1001151393	1	Shim .063	
4	1001182515	1	Decal - Ground Control	
5	4360387	1	Switch, Push Button	
6	1001176469	1	Shroud, Switch	

FIGURE 2-43. BEACON LIGHT INSTALLATION - AMBER

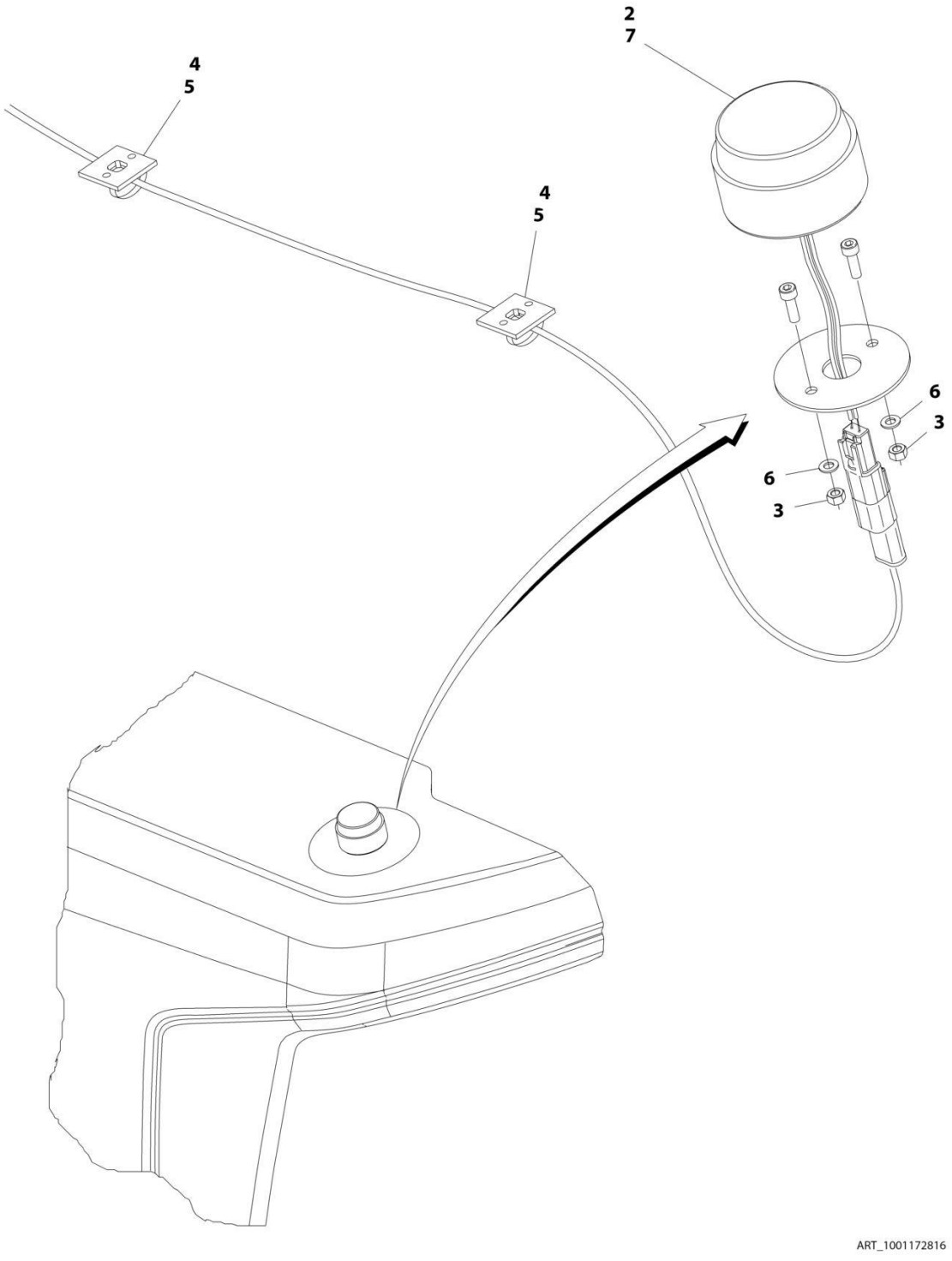

FIGURE 2-43. BEACON LIGHT INSTALLATION - AMBER

ITEM	PART NUMBER	QTY	DESCRIPTION	REV
	1001172816	Ref	BEACON LIGHT INSTALLATION - AMBER	C
2	1001181405	1	Light, Strobe (Amber)	
2	4460897	1	Receptacle, Female - 2 Position	
2	4460464	2	Pin, Male	
3	3290505	2	Nut M5	
4	4240032	2	Tie-Strap	
5	4460234	2	Mount, Tie-Strap	
6	4811600	2	Washer M5	
7	0100048	1	Grease, Terminal	

FIGURE 2-44. BEACON LIGHT INSTALLATION - BLUE (SN 0300203771 through 0300259126, SN E300000100 through E300007988)

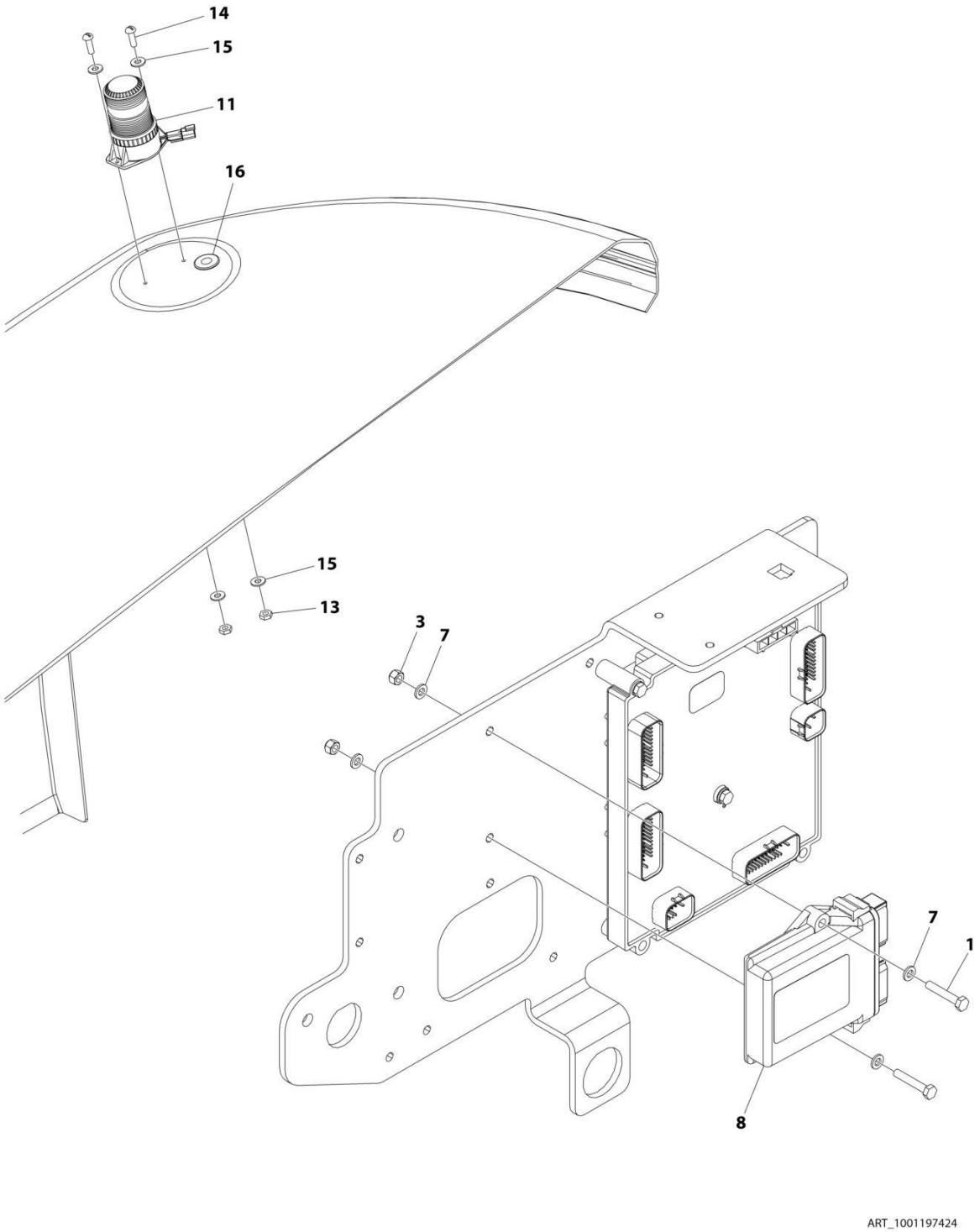

FIGURE 2-44. BEACON LIGHT INSTALLATION - BLUE (SN 0300203771 through 0300259126, SN E300000100 through E300007988)

ITEM	PART NUMBER	QTY	DESCRIPTION	REV
	1001197424	Ref	BEACON LIGHT INSTALLATION - BLUE	E
1	0760615	2	Bolt M6 x 35	
3	3290605	2	Nut M6	
5	4240099	AR	Tie-Strap (Not Shown)	
7	4811700	4	Washer M6	
8	1001142683	1	Control Module (Note: Re-calibration Required when Replaced)	
9	1001142736	1	Beacon Harness (Not Shown - See ELECTRICAL SECTION for Breakdown)	
11	1001200910	1	Light, Beacon	
11	4460897	1	Receptacle, Female - 2 Position	
11	4460943	2	Pin, Male	
13	3311005	2	Nut #10	
14	3911010	2	Screw #10 x 5/8	
15	4711000	4	Washer #10	
16	2540020	1	Grommet, Insulation	

FIGURE 2-45. BEACON LIGHT INSTALLATION - BLUE (SN 0300259127 through 0300272360)

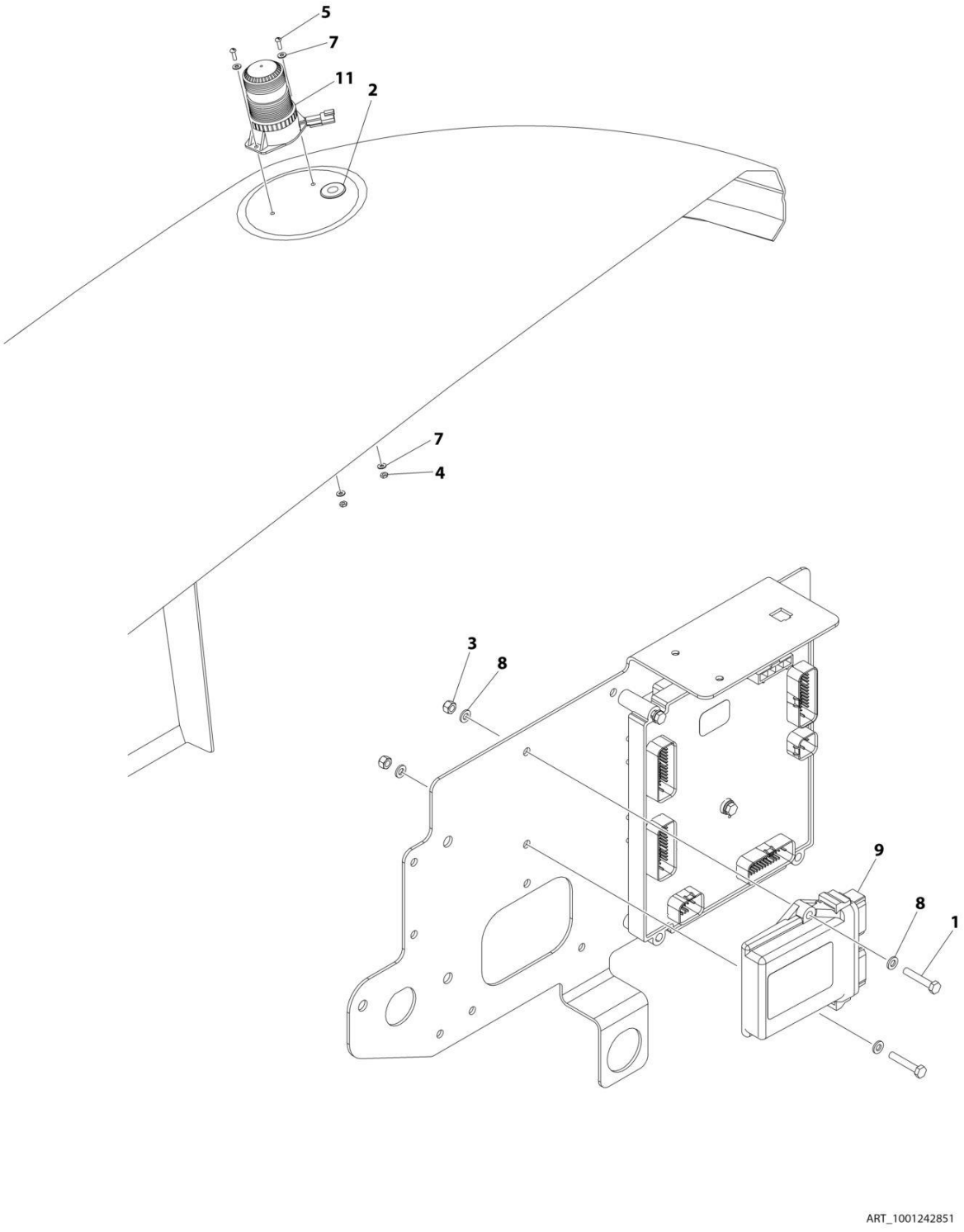

FIGURE 2-45. BEACON LIGHT INSTALLATION - BLUE (SN 0300259127 through 0300272360)

ITEM	PART NUMBER	QTY	DESCRIPTION	REV
	1001242851	Ref	BEACON LIGHT INSTALLATION - BLUE	A
1	0760615	2	Bolt M6 x 35	
2	2540020	1	Grommet, Insulation	
3	3290605	2	Nut M6	
4	3311005	2	Nut #10	
5	3911010	2	Screw #10 x 5/8	
6	4240099	AR	Tie-Strap (Not Shown)	
7	4711000	4	Washer #10	
8	4811700	4	Washer M6	
9	1001142683	1	Control Module (Note: Re-calibration Required when Replaced)	
10	1001142736	1	Beacon Harness (Not Shown - See Separate Breakdown in ELECTRICAL SECTION)	
11	1001200910	1	Light, Beacon	
11	4460897	1	Receptacle, Female - 2 Position	
11	4460943	2	Pin, Male	

FIGURE 2-46. BEACON LIGHT INSTALLATION - RED (SN 0300203771 through 0300259126, SN E300000100 through E300007988)

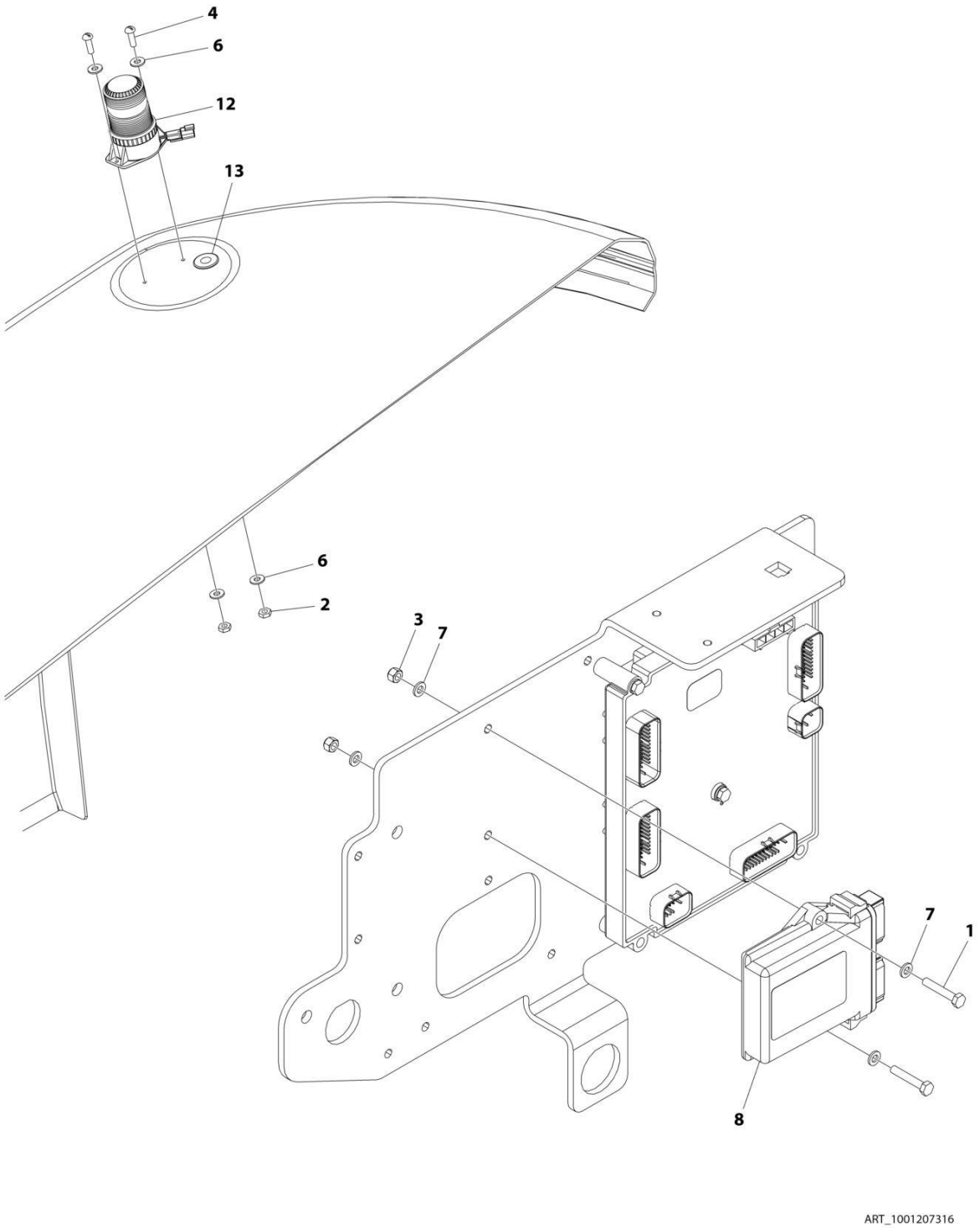

FIGURE 2-46. BEACON LIGHT INSTALLATION - RED (SN 0300203771 through 0300259126, SN E300000100 through E300007988)

ITEM	PART NUMBER	QTY	DESCRIPTION	REV
	1001207316	Ref	BEACON LIGHT INSTALLATION - RED	D
1	0760615	2	Bolt M6 x 35	
2	3311005	2	Nut #10	
3	3290605	2	Nut M6	
4	3911010	2	Screw #10 x 5/8	
5	4240099	AR	Tie, Wire (Not Shown)	
6	4711000	4	Washer #10	
7	4811700	4	Washer M6	
8	1001142683	1	Control Module (Note: Re-calibration Required when Replaced)	
9	1001142736	1	Beacon Harness (Not Shown - See ELECTRICAL SECTION for Breakdown)	
12	1001207004	1	Light, Red Beacon	
12	4460897	1	Receptacle, Female - 2 Position	
12	4460943	2	Pin, Male	
13	2540020	1	Grommet, Insulation	

FIGURE 2-47. BEACON LIGHT INSTALLATION - RED (SN 0300259127 through 0300272360)

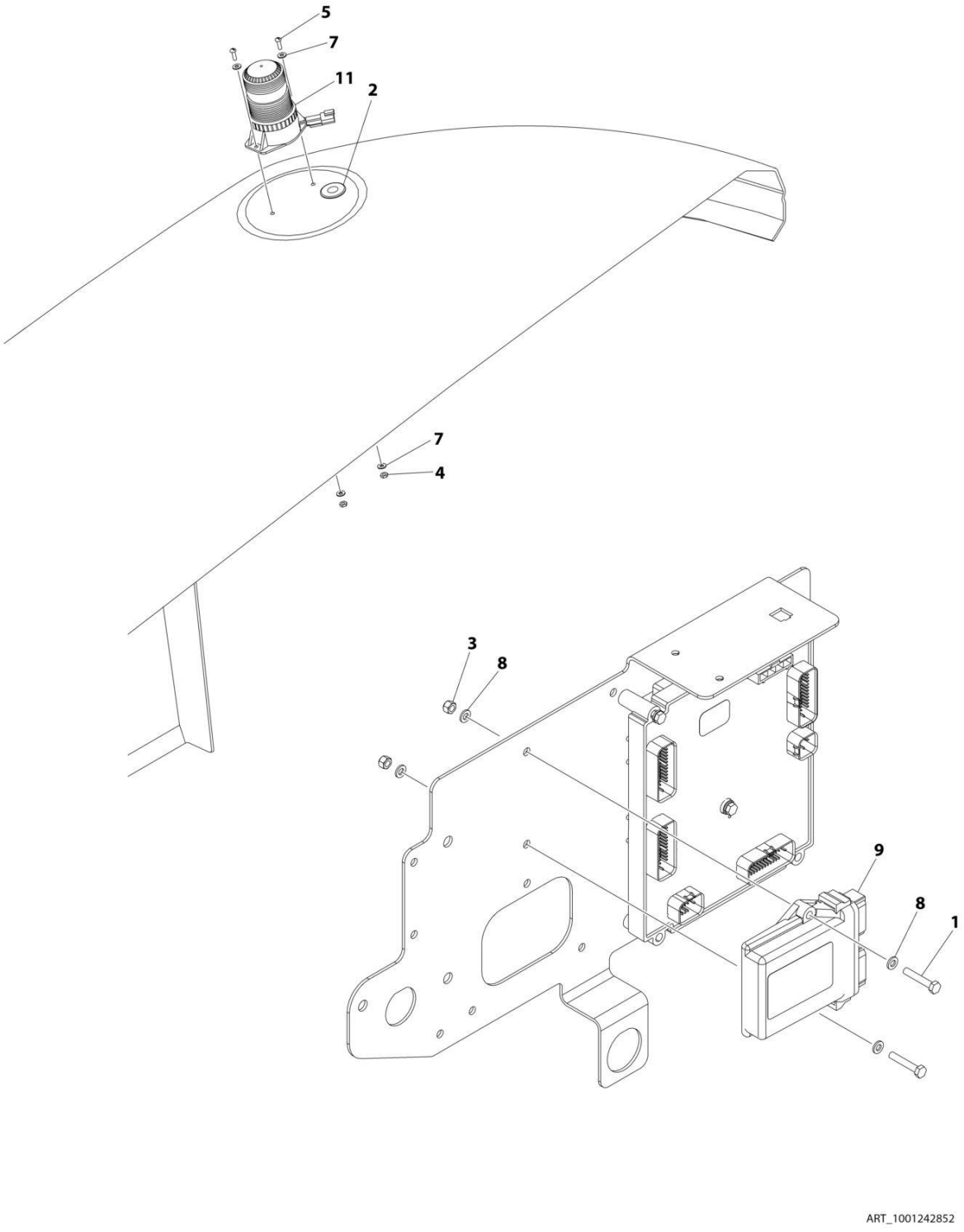

FIGURE 2-47. BEACON LIGHT INSTALLATION - RED (SN 0300259127 through 0300272360)

ITEM	PART NUMBER	QTY	DESCRIPTION	REV
	1001242852	Ref	BEACON LIGHT INSTALLATION - RED	A
1	0760615	2	Bolt M6 x 35	
2	2540020	1	Grommet, Insulation	
3	3290605	2	Nut M6	
4	3311005	2	Nut #10	
5	3911010	2	Screw #10 x 5/8	
6	4240099	AR	Tie-Strap (Not Shown)	
7	4711000	4	Washer #10	
8	4811700	4	Washer M6	
9	1001142683	1	Control Module (Note: Re-calibration Required when Replaced)	
10	1001142736	1	Beacon Harness (Not Shown - See Separate Breakdown in ELECTRICAL SECTION)	
11	1001207004	1	Light, Red Beacon	
11	4460897	1	Receptacle, Female - 2 Position	
11	4460943	2	Pin, Male	

FIGURE 2-48. HOOD INSTALLATION - ABS (DEUTZ & GM ENGINES)

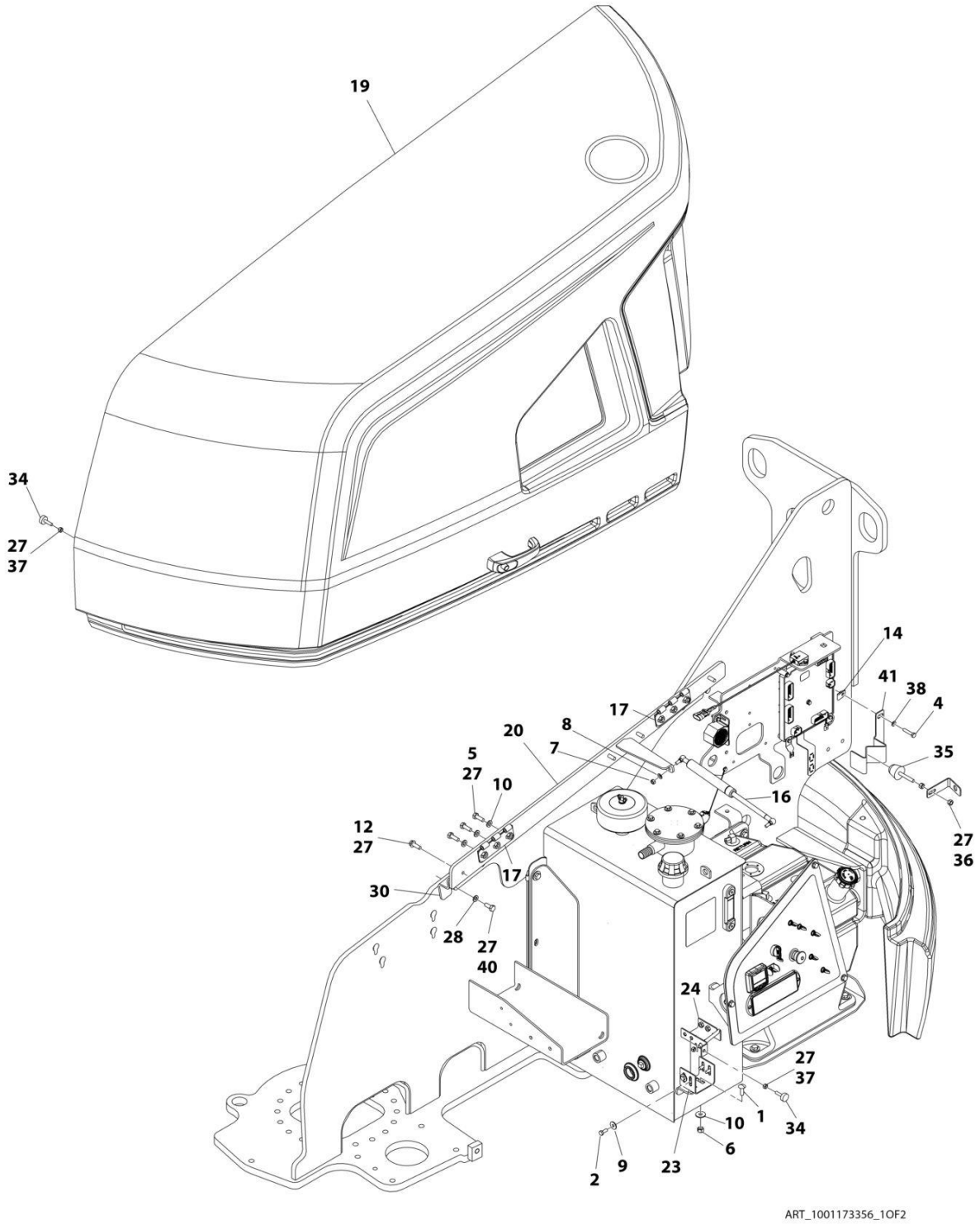

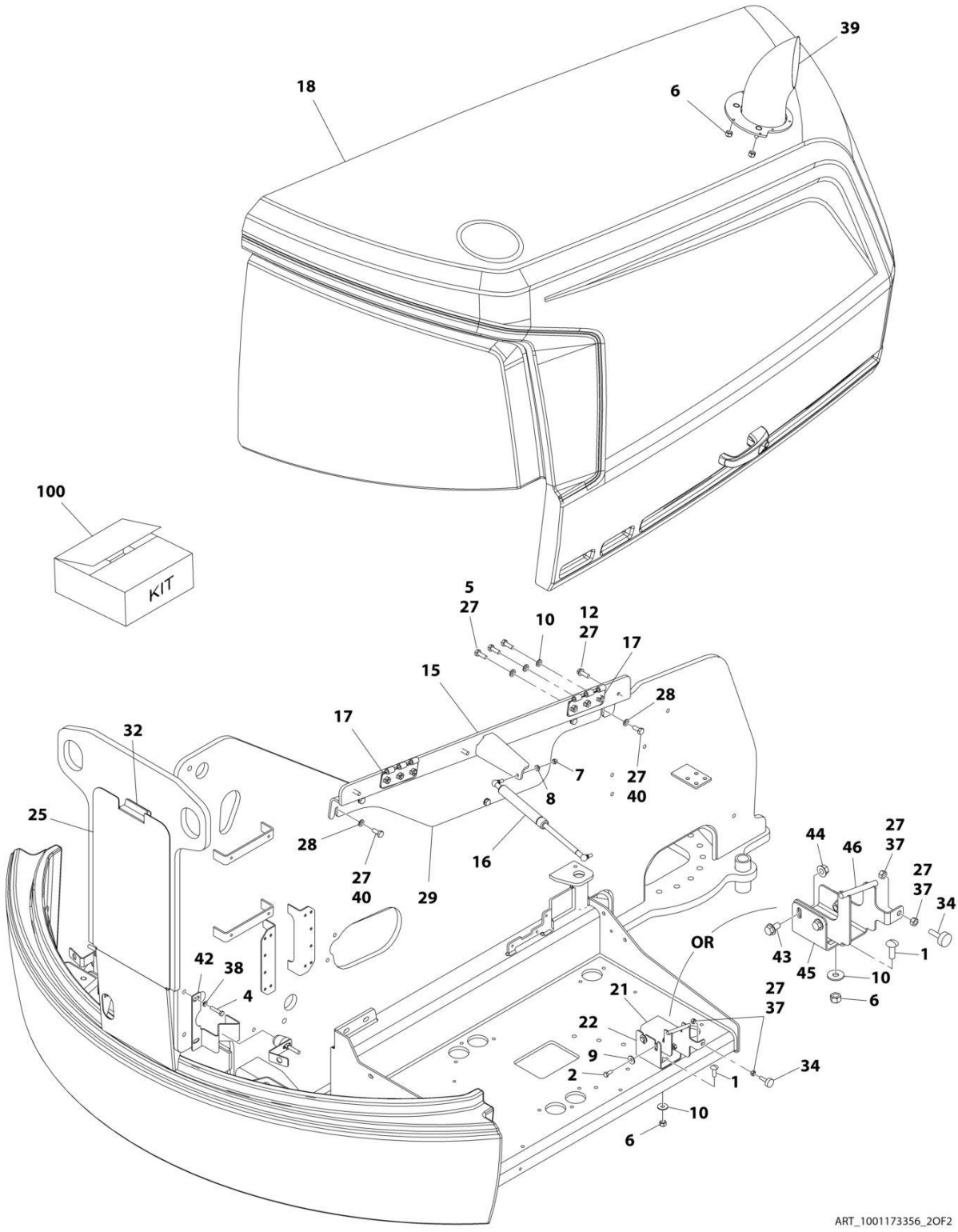
39
18
6
100
KIT
5
27
10
12
27
17
15
28
17
32
7
27
40
8
25
28
27
40
29
16
44
46
27
37
27
37
34
OR
43
45
10
1
27
37
6
21
22
9
2
1
34
10
6
ART_1001173356_2OF2

FIGURE 2-48. HOOD INSTALLATION - ABS (DEUTZ & GM ENGINES)

ITEM	PART NUMBER	QTY	DESCRIPTION	REV
	1001173356	Ref	HOOD INSTALLATION	
1	0630613	4	Bolt M10 x 30	
2	0760810	1	Bolt M8 x 20	
4	0760816	4	Bolt M8 x 40	
5	0761014	12	Bolt M10 x 30	
6	3291005	7	Nut M10	
7	3311505	2	Nut 5/16	
8	4711500	2	Washer 5/16	
9	4811902	AR	Washer M8	
10	4812002	16	Washer M10	
12	5251014	8	Bolt M10 x 30	
14	1001149160	4	Nut, Tinnerman M8	
15	1001167159	1	Mount, Adjustment	
16	4160182	2	Spring, Gas	
17	1001169046	4	Nut	
18	1001170551	1	Hood Assembly - Engine Side (See HOOD ASSEMBLY - ENGINE SIDE for Breakdown)	
19	1001170552	1	Hood Assembly - Tank Side (See HOOD ASSEMBLY - TANK SIDE for Breakdown)	
20	1001170850	1	Mount, Adjustment	
21	1001172613	1	Support **(SN 0300203771 through 0300226843, SN E300000100 through E300004185)**	
22	1001172614	1	Mount, Latch **(SN 0300203771 through 0300226843, SN E300000100 through E300004185)**	
23	1001172615	1	Mount, Latch	
24	1001172617	1	Support	
25	1001173354	1	Cover	
27	0100011	AR	Compound, Locking	
28	4812000	10	Washer M10	
29	1001165060	1	Plate	
30	1001168173	1	Mount, Hinge	
32	90200755	AR	Tape, Gasket	
34	0940049	4	Stopper	
35	0940071	2	Bumper **(SN 0300203771 through 0300214760, SN E300000100 through E300003114)**	
35	1001206314	2	Bumper **(SN 0300214761 through 0300272360, SN E300003115 through E300007988, SN 1300007289 through 130007393, Except SN 0300272174 through 0300272184, Excluding E300007847)**	
36	3271601	4	Nut 3/8	
37	3311501	8	Nut 5/16	
39	1001174098	1	Outlet, Exhaust	
40	0761012	10	Bolt M10 x 25	
41	1001199207	1	Bracket, Bumper	
42	1001199901	1	Bracket, Bumper	
43	5251009	1	Bolt M10 x 18	
44	5261000	1	Nut M10	
45	1001223078	1	Mount, Hood Latch	
46	1001223161	1	Support, Striker	

FIGURE 2-49. HOOD INSTALLATION - ABS (KUBOTA ENGINES)

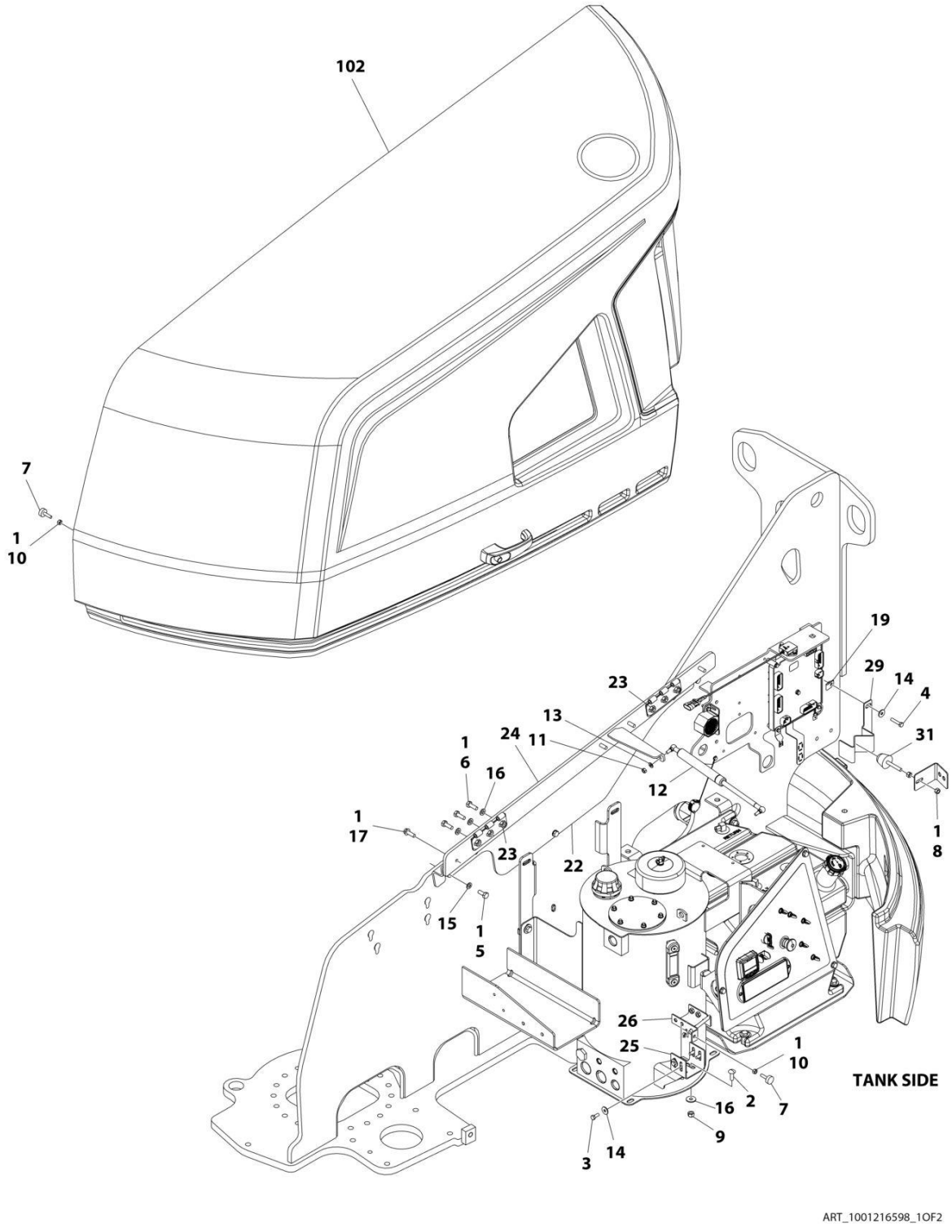

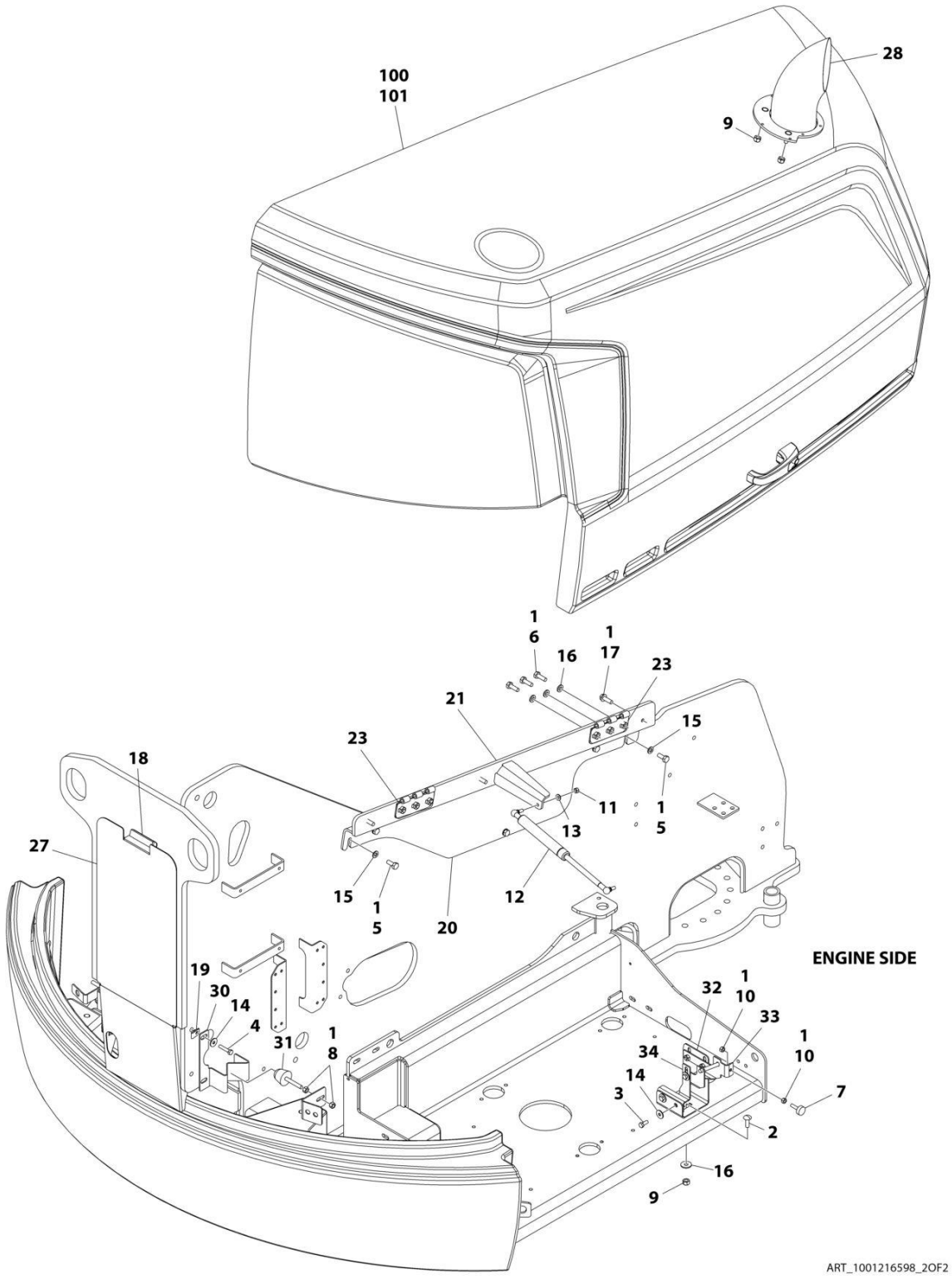
100
101
28
9
1
6
16
1
17
23
21
15
23
18
11
1
5
13
27
15
1
5
20
12
ENGINE SIDE
19
30
14
4
31
1
8
32
1
10
33
1
10
34
14
3
7
2
16
9
ART_1001216598_2OF2

FIGURE 2-49. HOOD INSTALLATION - ABS (KUBOTA ENGINES)

ITEM	PART NUMBER	QTY	DESCRIPTION	REV
	1001216598	Ref	KUBOTA HOOD INSTALLATION	A
1	0100011	AR	Compound, Locking	
2	0630613	4	Bolt M10 x 30	
3	0760810	9	Bolt M8 x 20	
4	0760816	4	Bolt M8 x 40	
5	0761012	10	Bolt M10 x 25	
6	0761014	12	Bolt M10 x 30	
7	0940049	4	Stopper	
8	3271601	4	Nut 3/8	
9	3291005	7	Nut M10	
10	3311501	8	Nut 5/16	
11	3311505	2	Nut 5/16	
12	4160182	2	Spring, Gas	
13	4711500	2	Washer 5/16	
14	4811902	13	Washer M8	
15	4812000	10	Washer M10	
16	4812002	16	Washer M10	
17	5251014	8	Bolt M10 x 30	
18	90200755	AR	Tape, Gasket	
19	1001149160	4	Nut, Tinnerman M8	
20	1001165060	1	Plate	
21	1001167159	1	Mount, Adjustment	
22	1001168173	1	Mount, Hinge	
23	1001169046	4	Nut	
24	1001170850	1	Mount, Adjustment	
25	1001172615	1	Mount, Latch	
26	1001172617	1	Support	
27	1001173354	1	Cover	
28	1001174098	1	Outlet, Exhaust	
29	1001199207	1	Bracket, Bumper	
30	1001199901	1	Bracket, Bumper	
31	1001206314	2	Bumper	
32	1001215634	1	Mount, Hood Latch	
33	1001216325	1	Support, Striker Weldment	
34	1001216326	1	Mount, Hood Latch Weldment	
100	1001202298	1	Hood Kit (Includes Items 101 & 102)	
101	1001170551	1	Hood Assembly - Engine Side (See HOOD ASSEMBLY - ENGINE SIDE for Breakdown)	
102	1001170552	1	Hood Assembly - Tank Side (See HOOD ASSEMBLY - TANK SIDE for Breakdown)	

FIGURE 2-50. HOOD INSTALLATION - ABS (KUBOTA ENGINES) (CE SPECS)

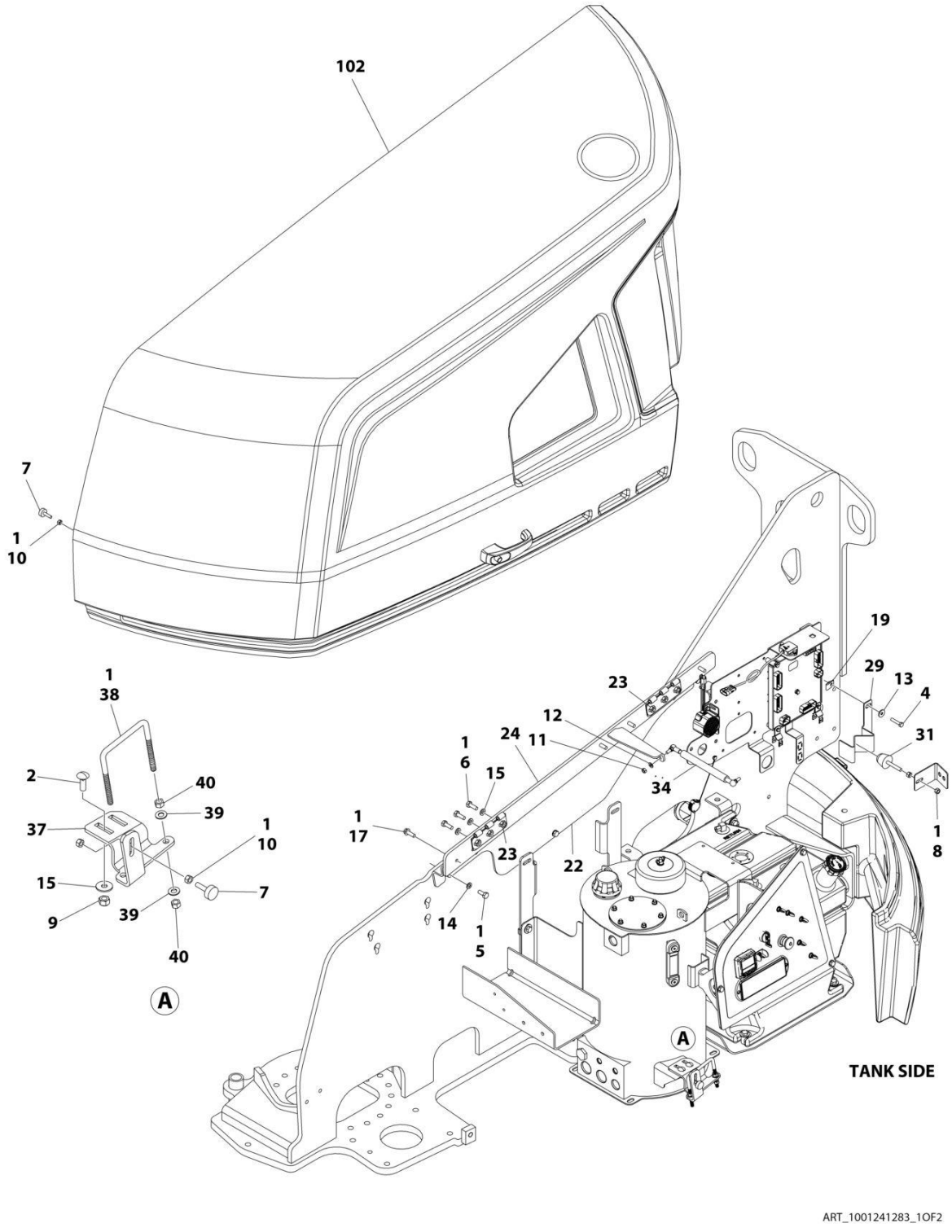

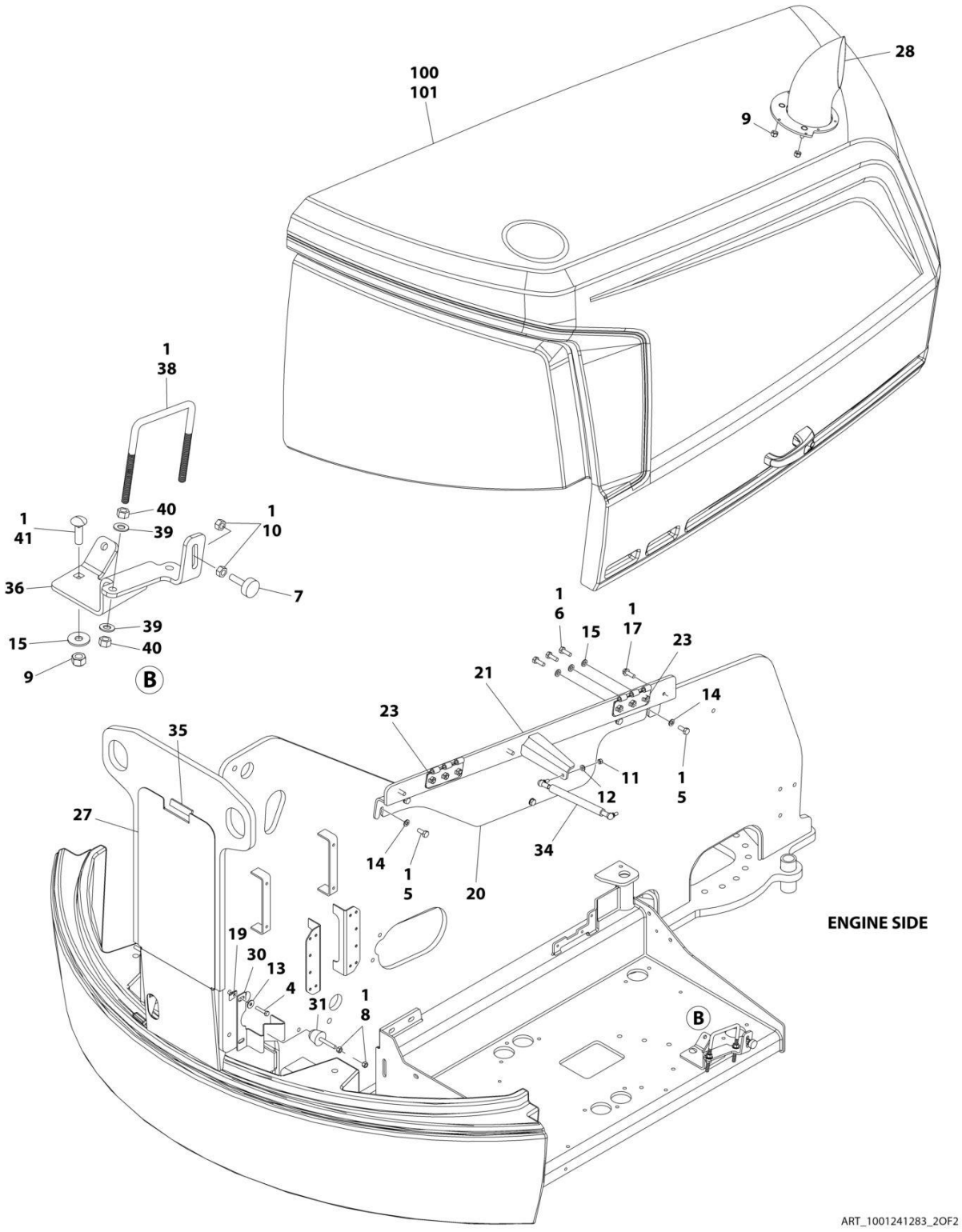
100
101
28
9
1
38
40
39
1
41
1
10
7
36
39
15
40
9
B
1
6
15
1
17
23
21
14
23
35
11
12
1
5
27
34
14
1
5
20
ENGINE SIDE
19
30
13
4
31
1
8
B
ART_1001241283_2OF2

FIGURE 2-50. HOOD INSTALLATION - ABS (KUBOTA ENGINES) (CE SPECS)

ITEM	PART NUMBER	QTY	DESCRIPTION	REV
	1001241283	Ref	KUBOTA HOOD INSTALLATION	B
1	0100011	AR	Compound, Locking	
2	0630613	2	Bolt M10 x 30	
4	0760816	4	Bolt M8 x 40	
5	0761012	10	Bolt M10 x 25	
6	0761014	12	Bolt M10 x 30	
7	0940049	4	Stopper	
8	3271601	4	Nut 3/8	
9	3291005	7	Nut M10 x 1.5	
10	3311501	8	Nut 5/16	
11	3311505	2	Nut 5/16	
12	4711500	2	Washer 5/16	
13	4811902	4	Washer M8	
14	4812000	10	Washer M10	
15	4812002	16	Washer M10	
17	5251014	8	Bolt, M10 x 30	
19	1001149160	4	Nut, Tinnerman M8	
20	1001165060	1	Plate	
21	1001167159	1	Mount, Adjustment	
22	1001168173	1	Mount, Hinge	
23	1001169046	4	Nut	
24	1001170850	1	Mount, Adjustment	
27	1001173354	1	Cover	
28	1001174098	1	Outlet, Exhaust	
29	1001199207	1	Bracket, Bumper	
30	1001199901	1	Bracket, Bumper	
31	1001206314	2	Bumper	
34	4160182	2	Spring, Gas	
35	90200755	AR	Tape, Gasket	
36	1001250287	1	Bracket	
37	1001250289	1	Bracket	
38	1001243414	2	Bolt 3/8 x 4 x 4 5/8	
39	4711600	8	Washer 3/8	
40	3311601	8	Nut 3/8	
41	1001228406	2	Bolt M10 x 35	
100	1001241288	1	Hood Kit (Includes Items 101 & 102)	
101	1001241291	1	Hood Assembly - Engine Side (See Separate Breakdown in this Section)	
102	1001241292	1	Hood Assembly - Tank Side (See Separate Breakdown in this Section)	

FIGURE 2-51. ABS HOOD ASSEMBLY - ENGINE SIDE

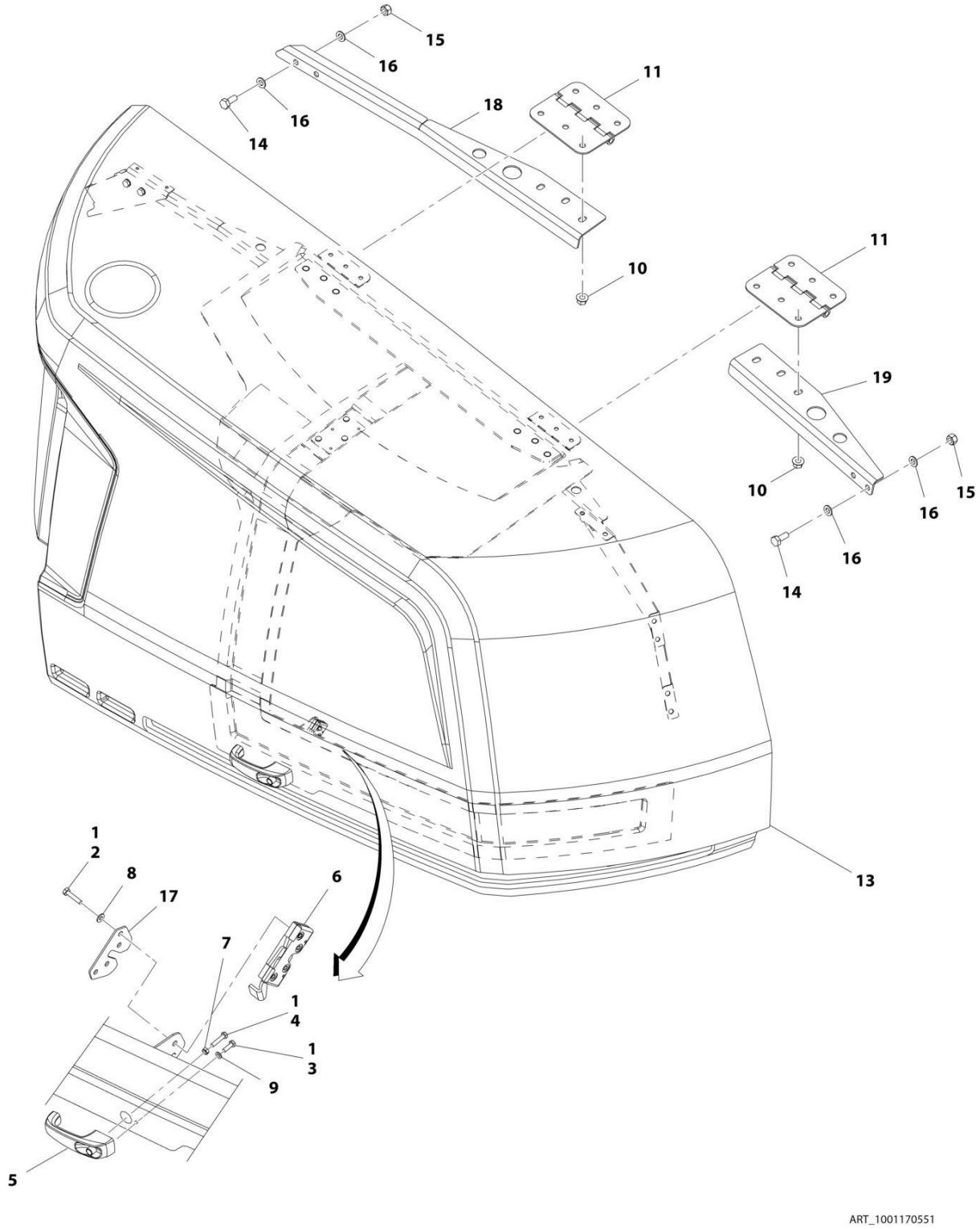

FIGURE 2-51. ABS HOOD ASSEMBLY - ENGINE SIDE

ITEM	PART NUMBER	QTY	DESCRIPTION	REV
	1001170551	Ref	HOOD ASSEMBLY - ENGINE SIDE	F
1	0100011	AR	Compound, Locking	
2	0641410	4	Bolt 1/4 x 1-1/4	
3	0760610	2	Bolt M6 x 20	
4	0760614	1	Bolt M6 x 30	
5	2560187	1	Handle, Push Button	
6	2940173	1	Latch, Rotary	
7	3290601	1	Nut M6	
8	4711400	4	Washer 1/4	
9	4811700	2	Washer M6	
10	5261018	6	Nut M10 Grade 10.9	
11	1001139384	2	Hinge	
13	See Note	NSS	Hood - Engine Side (Note: Purchase pn 1001170551)	
14	0761012	4	Bolt M10 x 25	
15	3291005	4	Nut M10	
16	4812000	8	Washer M10	
17	1001200458	1	Plate	
18	1001201636	1	Hood Support	
19	1001201635	1	Hood Support	

FIGURE 2-52. ABS HOOD ASSEMBLY - ENGINE SIDE (CE SPEC)

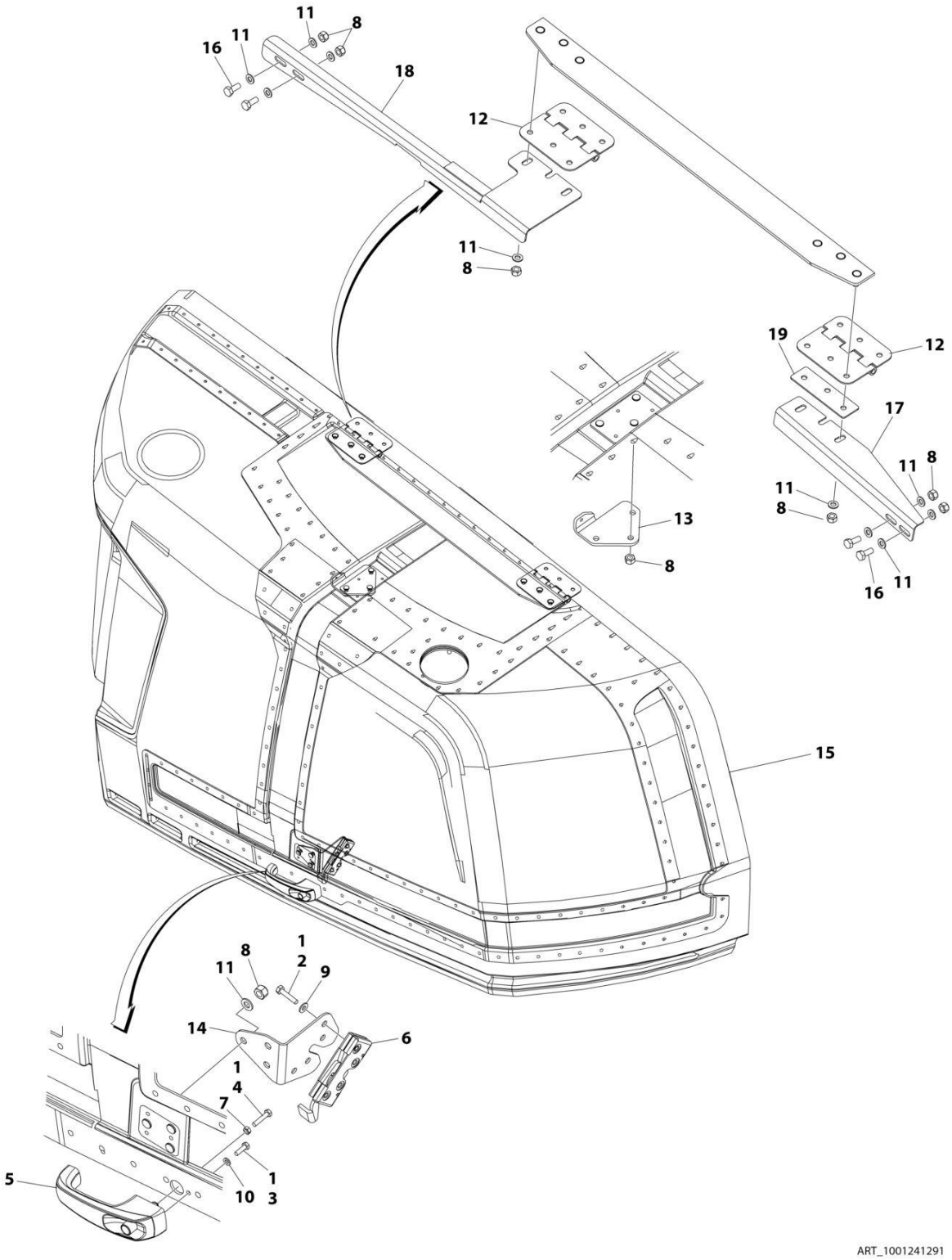

FIGURE 2-52. ABS HOOD ASSEMBLY - ENGINE SIDE (CE SPEC)

ITEM	PART NUMBER	QTY	DESCRIPTION	REV
	1001241291	Ref	HOOD ASSEMBLY - ENGINE SIDE	C
1	0100011	AR	Compound, Locking	
2	0641410	4	Bolt 1/4 x 1-1/4	
3	0760610	2	Bolt M6 x 20	
4	0760614	1	Bolt M6 x 30	
5	2560187	1	Handle, Push Button	
6	2940173	1	Latch, Rotary	
7	3290601	1	Nut M6	
8	3291005	16	Nut M10	
9	4711400	4	Washer 1/4	
10	4811700	2	Washer M6	
11	4812000	17	Washer M10	
12	1001139384	2	Hinge - 6 holes	
12	1001259230	2	Hinge - 3 holes and 3 slotted holes	
13	1001178228	1	Bracket, Engine	
14	1001202830	1	Hood Support	
15	See Note	NSS	Hood (Note: Use p/n 1001241291)	
16	0761012	4	Bolt M10 x 25	
17	1001253892	1	Support	
18	1001253896	1	Support	
19	1001253903	1	Plate	

FIGURE 2-53. ABS HOOD ASSEMBLY - TANK SIDE

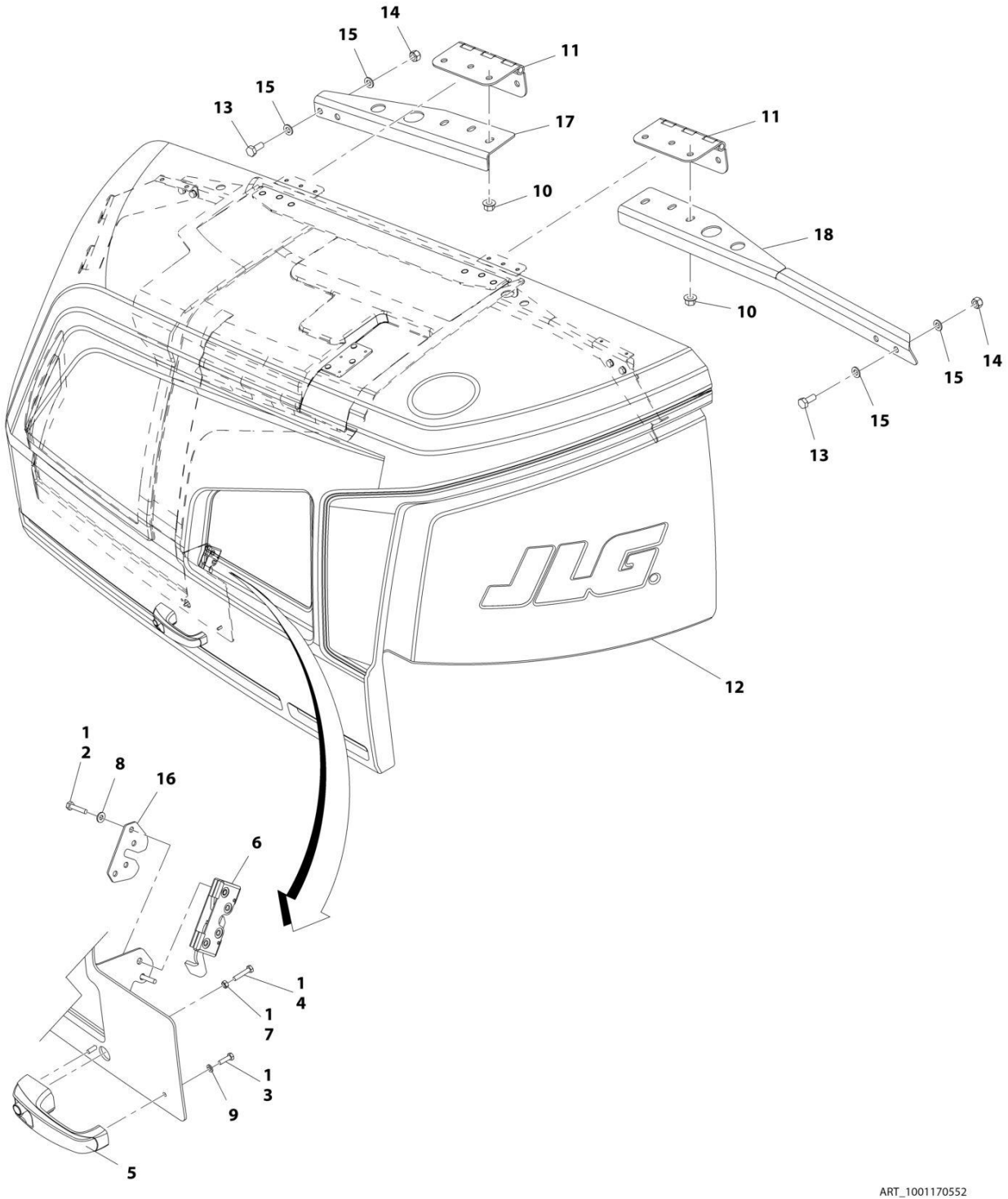

FIGURE 2-53. ABS HOOD ASSEMBLY - TANK SIDE

ITEM	PART NUMBER	QTY	DESCRIPTION	REV
	1001170552	Ref	HOOD ASSEMBLY - TANK SIDE	D
1	0100011	AR	Compound, Locking	
2	0641410	4	Bolt 1/4 x 1-1/4	
3	0760610	2	Bolt M6 x 20	
4	0760614	1	Bolt M6 x 30	
5	2560187	1	Handle, Push Button	
6	2940173	1	Latch, Rotary	
7	3290601	1	Nut M6	
8	4711400	4	Washer 1/4	
9	4811700	2	Washer M6	
10	5261018	6	Nut M10 Grade 10.9	
11	1001139384	2	Hinge	
12	See Note	NSS	Hood (Note: Use PN 1001170552)	
13	0761012	4	Bolt M10 x 25	
14	3291005	4	Nut M10	
15	4812000	8	Washer M10	
16	1001200458	1	Plate	
17	1001201633	1	Hood Support	
18	1001201634	1	Hood Support	

FIGURE 2-54. ABS HOOD ASSEMBLY - TANK SIDE (CE SPEC)

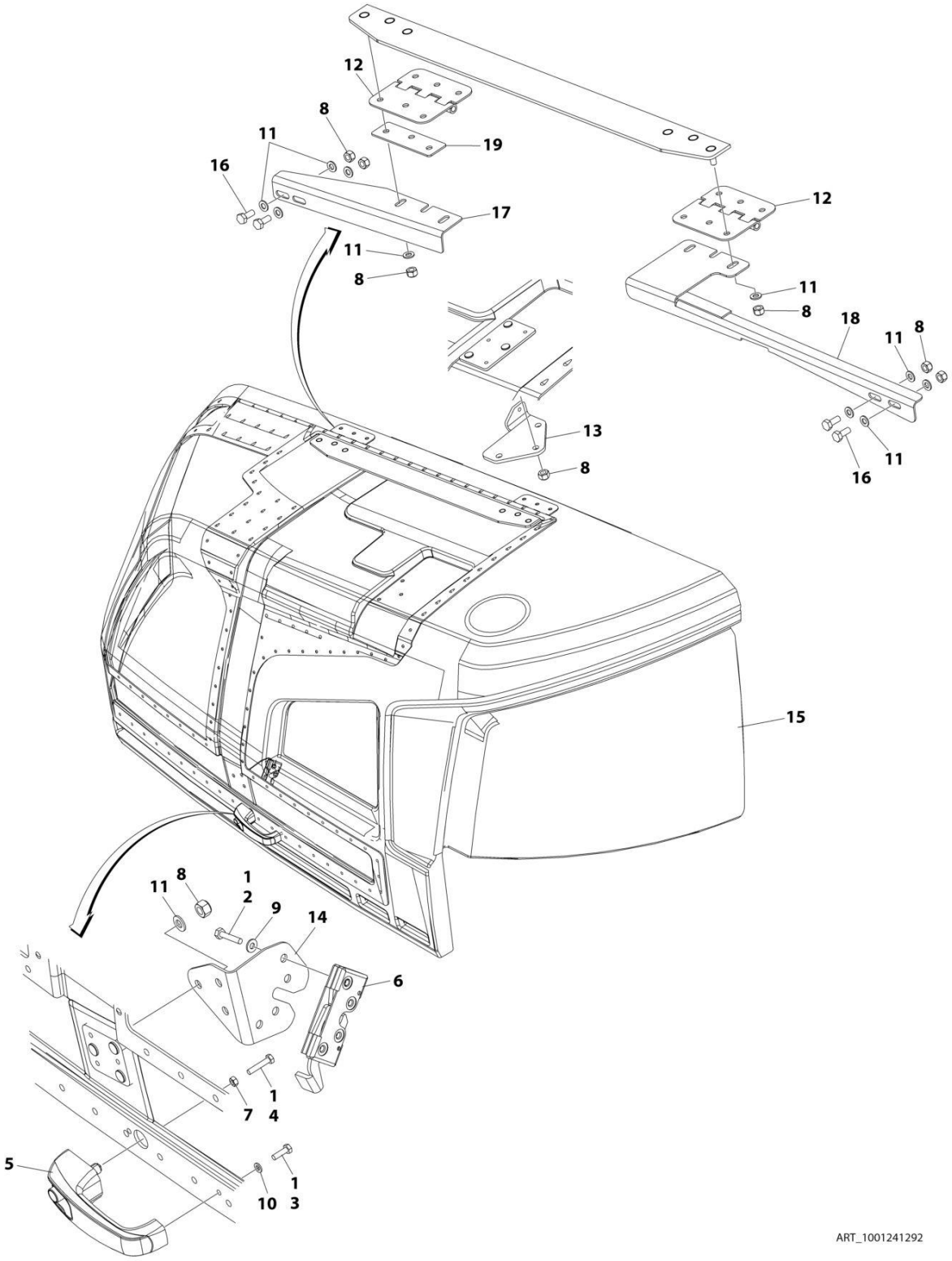

FIGURE 2-54. ABS HOOD ASSEMBLY - TANK SIDE (CE SPEC)

ITEM	PART NUMBER	QTY	DESCRIPTION	REV
	1001241292	Ref	HOOD ASSEMBLY - TANK SIDE	C
1	0100011	AR	Compound, Locking	
2	0641410	4	Bolt 1/4 x 1-1/4	
3	0760610	2	Bolt M6 x 20	
4	0760614	1	Bolt M6 x 30	
5	2560187	1	Handle, Push Button	
6	2940173	1	Latch, Rotary	
7	3290601	1	Nut M6	
8	3291005	16	Nut M10	
9	4711400	4	Washer 1/4	
10	4811700	2	Washer M6	
11	4812000	17	Washer M10	
12	1001139384	2	Hinge - 6 holes	
12	1001259230	2	Hinge - 3 holes and 3 slotted holes	
13	1001170475	1	Bracket, Engine	
14	1001202831	1	Hood Support	
15	See Note	NSS	Hood (Note: Use PN 1001241292)	
16	0761012	4	Bolt M10 x 25	
17	1001253893	1	Support	
18	1001253897	1	Support	
19	1001253903	1	Plate	

FIGURE 2-55. HOOD INSTALLATION - STEEL

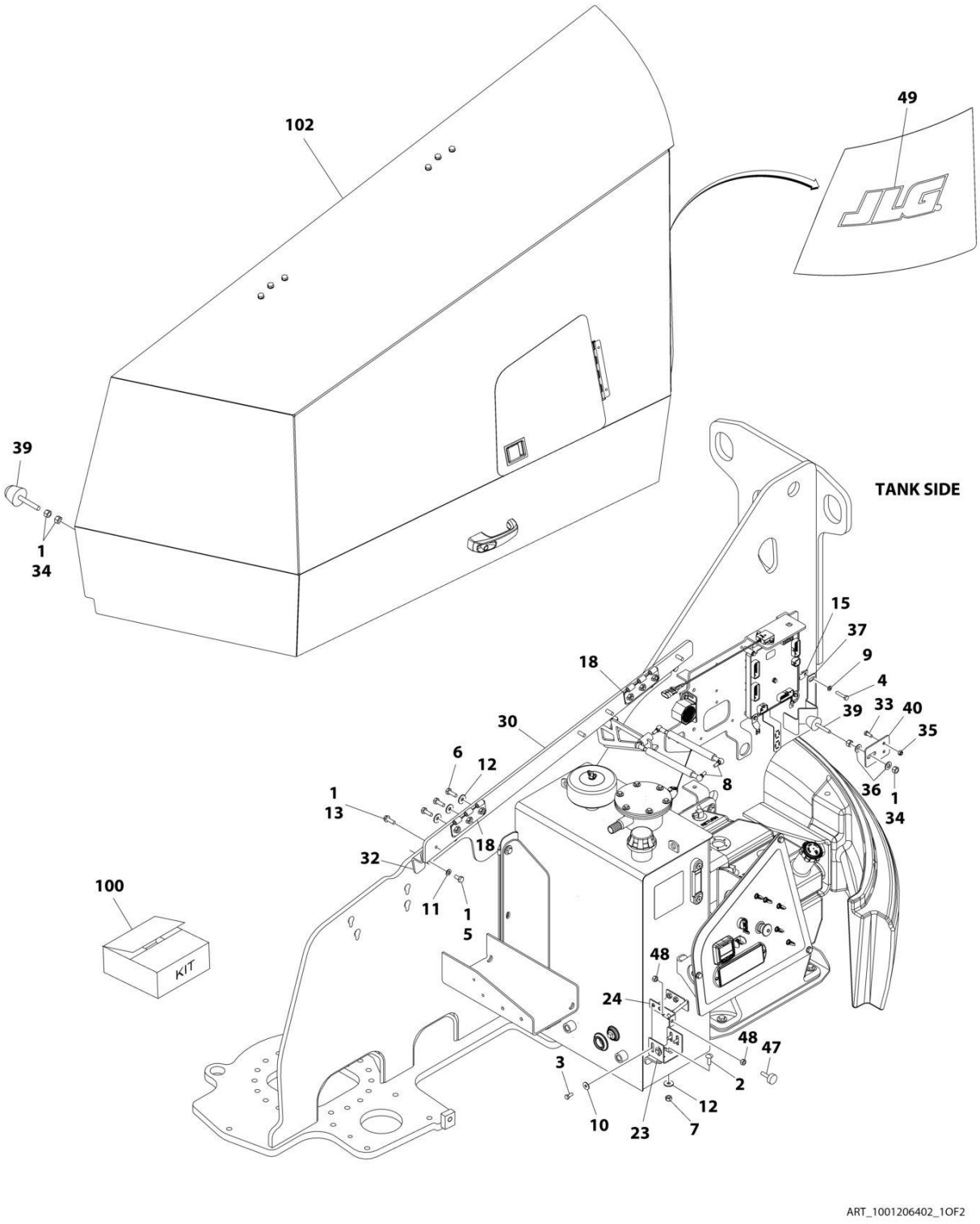

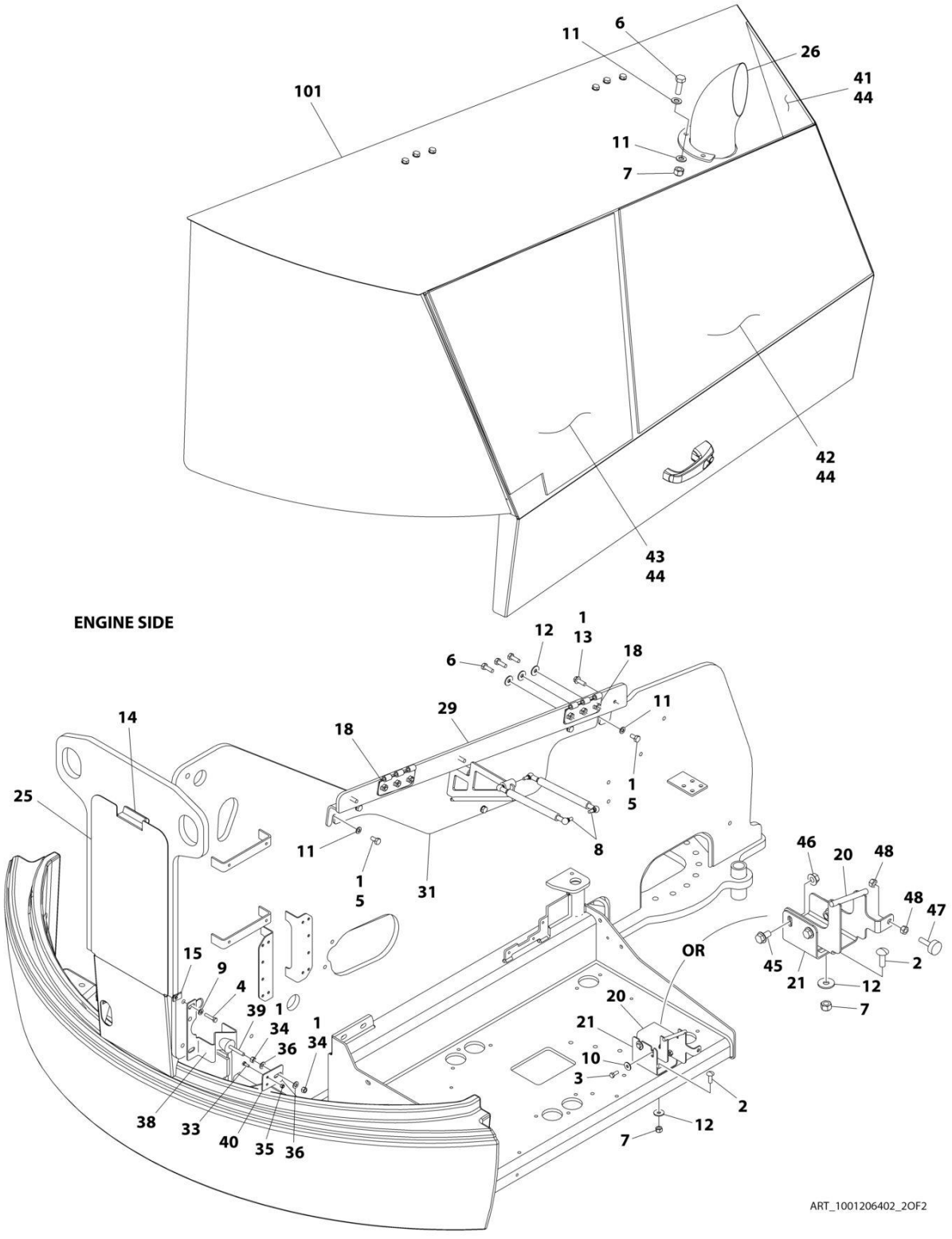
ENGINE SIDE
ART_1001206402_2OF2

FIGURE 2-55. HOOD INSTALLATION - STEEL

ITEM	PART NUMBER	QTY	DESCRIPTION	REV
	1001206402	Ref	STEEL HOOD INSTALLATION	G
1	0100011	AR	Compound, Locking	
2	0630613	4	Bolt M10 x 30	
3	0760810	4	Bolt M8 x 20	
4	0760816	4	Bolt M8 x 40	
5	0761012	10	Bolt M10 x 25	
6	0761014	15	Bolt M10 x 30	
7	3291005	7	Nut M10	
8	1001167918	4	Spring, Gas	
9	4811900	4	Washer M8	
10	4811902	4	Washer M8	
11	4812000	16	Washer M10	
12	4812002	16	Washer M10	
13	5251012	8	Bolt M10 x 25	
14	90200755	85 mm	Tape, Gasket	
15	1001149160	4	Nut, Tinnerman M8	
18	1001169046	4	Nut	
20	1001223161	1	Support	
21	1001223078	1	Mount, Latch	
23	1001172615	1	Mount, Latch	
24	1001172617	1	Support	
25	1001173354	1	Cover	
26	1001174098	1	Outlet, Exhaust	
29	1001211633	1	Plate	
30	1001211636	1	Plate	
31	1001212819	1	Mount, Hinge	
32	1001212822	1	Mount, Hinge	
33	0760608	4	Bolt M6 x 16	
34	3271601	8	Nut 3/8	
35	3290605	4	Nut M6	
36	4711600	4	Washer 3/8	
37	1001199207	1	Bracket, Bumper	
38	1001199901	1	Bracket, Bumper	
39	1001206314	4	Bumper	
40	1001219134	2	Plate, Bumper Mount	
41	1001222043	1	Insulate, Heat Shield	
42	1001222044	1	Insulate, Heat Shield	
43	1001223387	1	Insulate, Heat Shield	
44	1001117140	AR	Tape	
45	5251009	3	Bolt M10 x 18	
46	5261000	3	Nut M10	
47	0940049	2	Stopper	
48	3311501	4	Nut	
49	1001159323	1	Decal - JLG	
50	1001113047	AR	Adhesive (Not Shown)	
100	1001206403	1	Hood, Kit 400S/460SJ	
101	1001206404	1	Steel Hood Assembly - Engine Side (See STEEL HOOD ASSEMBLY - ENGINE SIDE for Breakdown)	
102	1001206418	1	Steel Hood Assembly - Tank Side (See STEEL HOOD ASSEMBLY - TANK SIDE for Breakdown)	

FIGURE 2-56. STEEL HOOD ASSEMBLY - ENGINE SIDE (ANSI EXPORT SPECS)

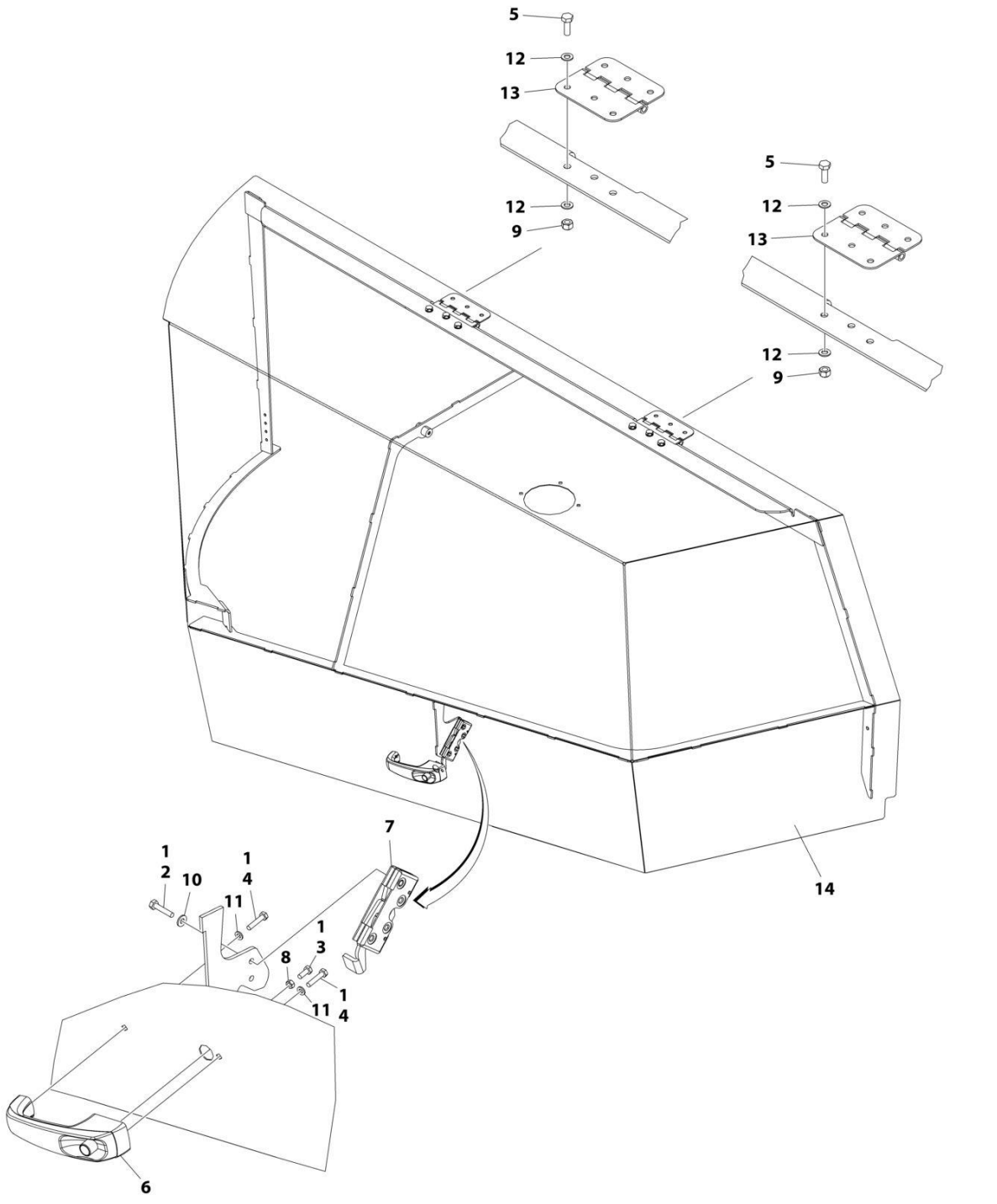

FIGURE 2-56. STEEL HOOD ASSEMBLY - ENGINE SIDE (ANSI EXPORT SPECS)

ITEM	PART NUMBER	QTY	DESCRIPTION	REV
	1001206404	Ref	STEEL HOOD ASSEMBLY - ENGINE SIDE (ANSI EXPORT SPECS)	C
1	0100011	AR	Compound, Locking	
2	0641410	4	Bolt 1/4 x 1-1/4	
3	0760608	1	Bolt M6 x 16	
4	0760614	2	Bolt M6 x 30	
5	0761014	6	Bolt M10 x 30	
6	2560187	1	Handle, Push Button	
7	2940173	1	Latch, Rotary	
8	3290601	1	Nut M6	
9	3291005	6	Nut M10	
10	4711400	4	Washer 1/4	
11	4811700	2	Washer M6	
12	4812000	12	Washer M10	
13	1001139384	2	Hinge	
14	1001206405	1	Hood, Engine Side Weldment	

FIGURE 2-57. STEEL HOOD ASSEMBLY - TANK SIDE (ANSI EXPORT SPECS)

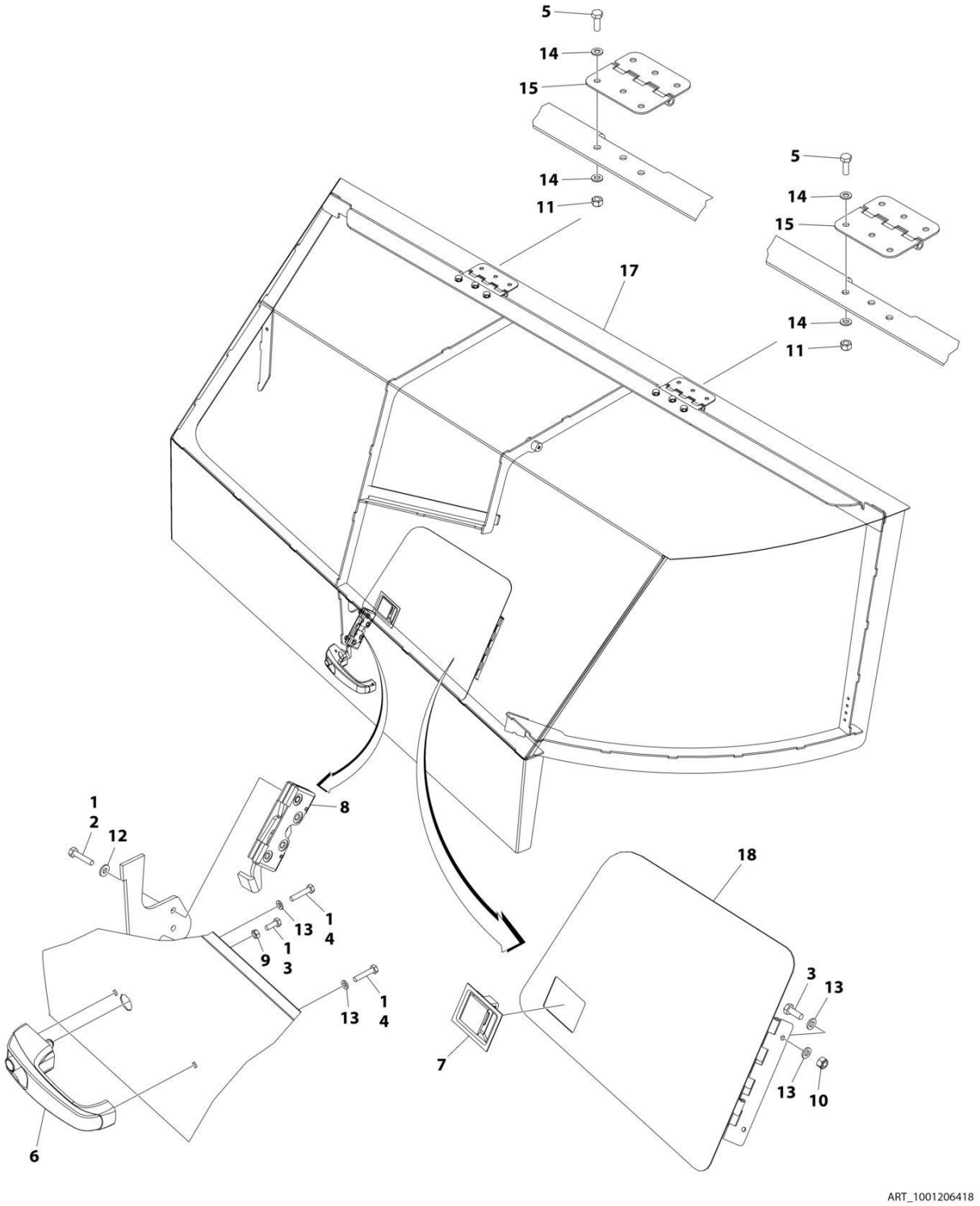

FIGURE 2-57. STEEL HOOD ASSEMBLY - TANK SIDE (ANSI EXPORT SPECS)

ITEM	PART NUMBER	QTY	DESCRIPTION	REV
	1001206418	Ref	STEEL HOOD ASSEMBLY - TANK SIDE (ANSI EXPORT SPECS)	C
1	0100011	AR	Compound, Locking	
2	0641410	4	Bolt 1/4 x 1-1/4	
3	0760608	3	Bolt M6 x 16	
4	0760614	2	Bolt M6 x 30	
5	0761014	6	Bolt M10 x 30	
6	2560187	1	Handle, Push Button	
7	2940045	1	Latch, Paddle	
8	2940173	1	Latch, Rotary	
9	3290601	1	Nut M6	
10	3290605	2	Nut M6	
11	3291005	6	Nut M10	
12	4711400	4	Washer 1/4	
13	4811700	6	Washer M6	
14	4812000	12	Washer M10	
15	1001139384	2	Hinge	
17	1001206419	1	Hood, Tank Side Weldment	
18	1001207726	1	Door, Ground Control Panel	

FIGURE 2-58. SOUND REDUCTION INSTALLATION - KUBOTA ENGINE MACHINES WITH STEEL HOODS

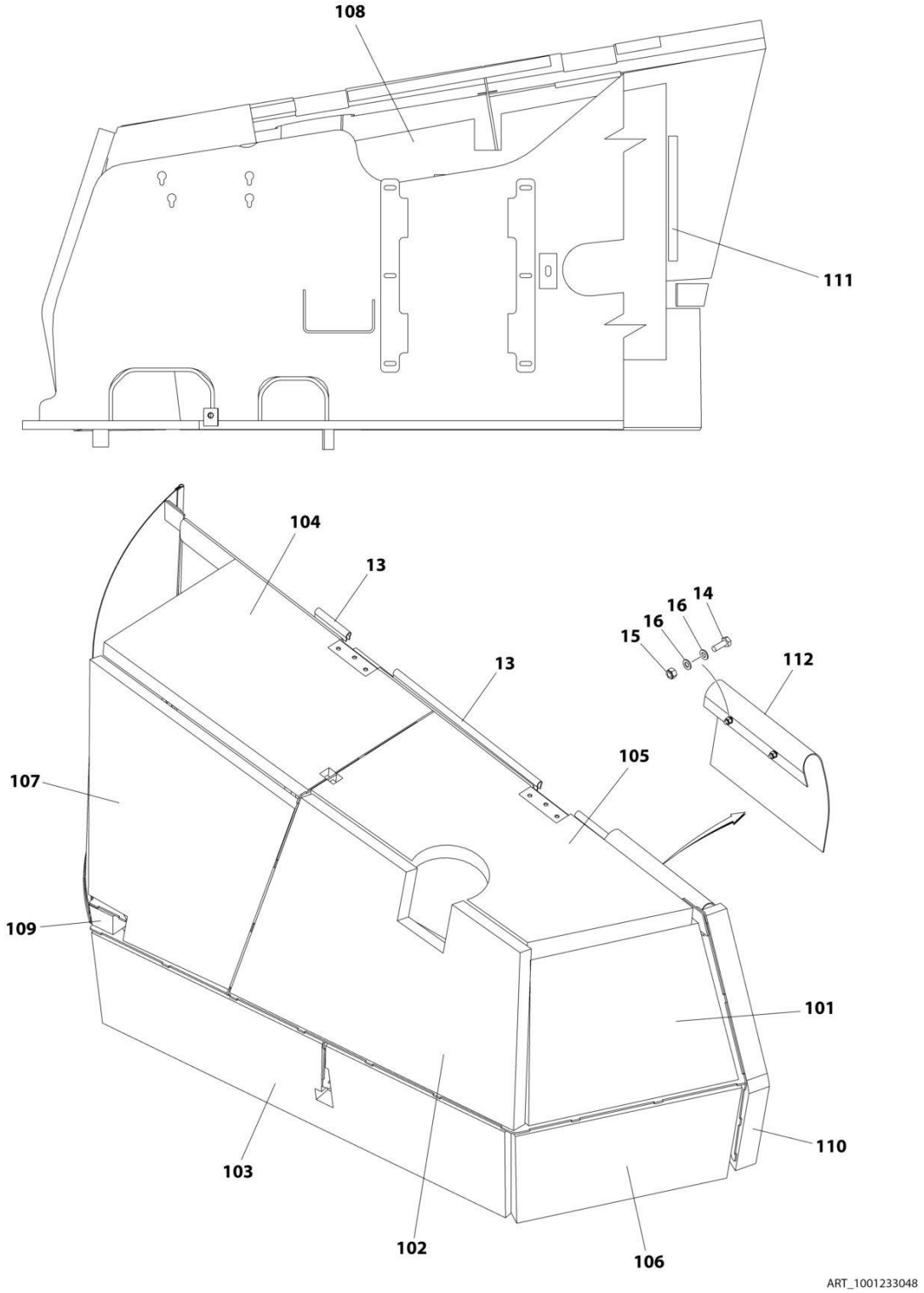

FIGURE 2-58. SOUND REDUCTION INSTALLATION - KUBOTA ENGINE MACHINES WITH STEEL HOODS

ITEM	PART NUMBER	QTY	DESCRIPTION	REV
	1001233048	Ref	SOUND REDUCTION INSTALLATION	C
13	3960389	11 ft/ 3.4m	Flex-Trim	
14	0761014	2	Bolt M10 x 30	
15	3291005	2	Nut M10	
16	4812000	4	Washer M10	
100	1001237549	Ref	Sound Insulation Kit (Includes Item 101-112)	
101	1001232907	1	Shield, Sound	
102	1001232908	1	Shield, Sound	
103	1001232913	1	Shield, Sound	
104	1001232915	1	Shield, Sound	
105	1001232916	1	Shield, Sound	
106	1001232917	1	Shield, Sound	
107	1001233075	1	Shield, Sound	
108	1001233076	1	Shield, Sound	
109	1001233077	1	Shield, Sound	
110	1001233412	1	Shield, Sound	
111	1001233413	2	Shield, Sound	
112	1001233436	1	Baffle Rubber	

FIGURE 2-59. TURNTABLE COVERS INSTALLATION

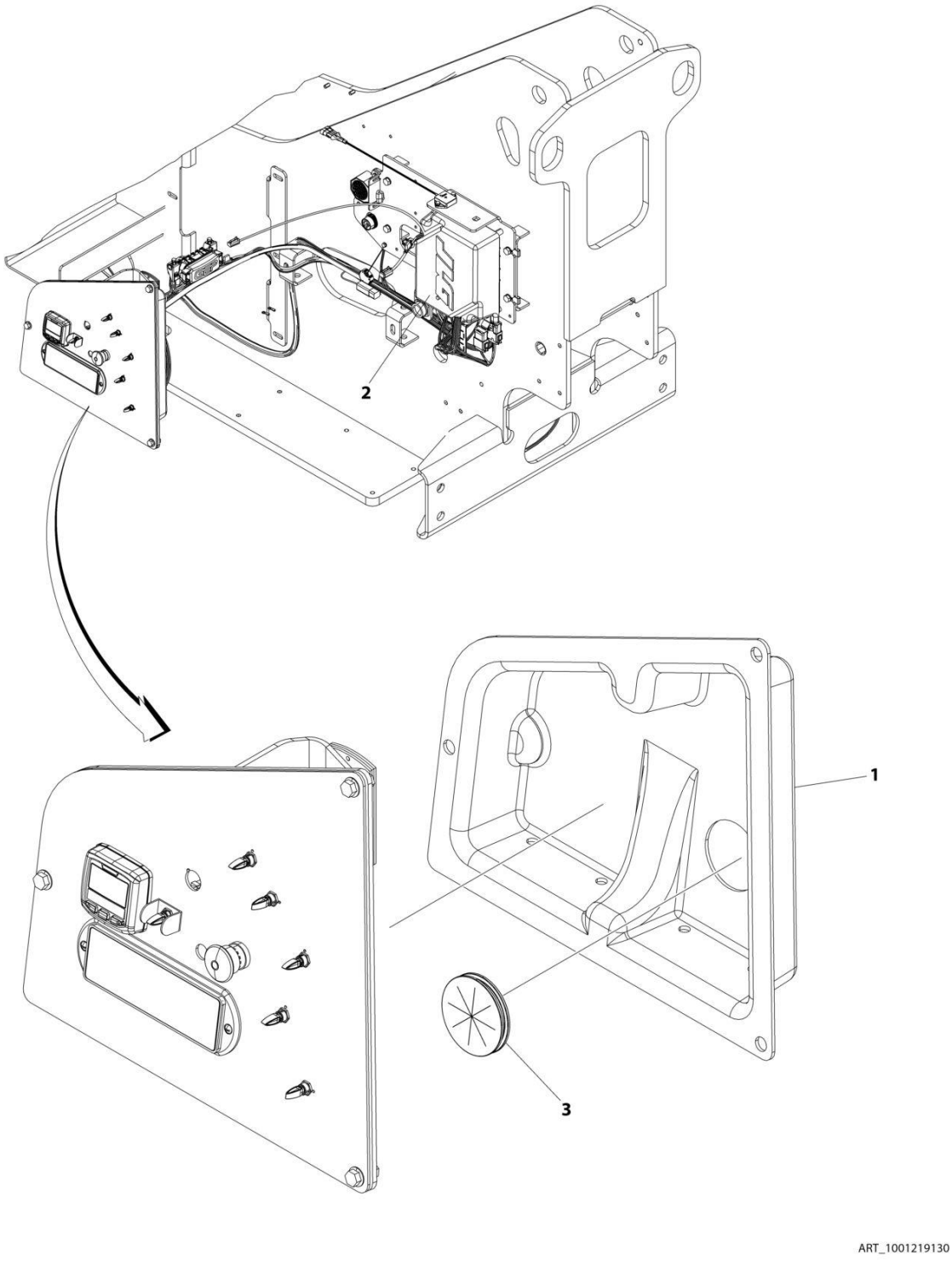

FIGURE 2-59. TURNTABLE COVERS INSTALLATION

ITEM	PART NUMBER	QTY	DESCRIPTION	REV
	1001219130	Ref	TURNTABLE COVERS INSTALLATION	A
1	1001218534	1	Cover, Control Panel	
2	1001218538	1	Cover, Controller	
3	1001218676	1	Grommet	

SECTION 3 - ENGINE

FIGURE 3-1. ENGINE INSTALLATION - DEUTZ D2011 ENGINE (WITHOUT ARCTIC PACKAGE) (ANSI EXPORT, AUSTRALIAN, CE AND CHINA SPECS)

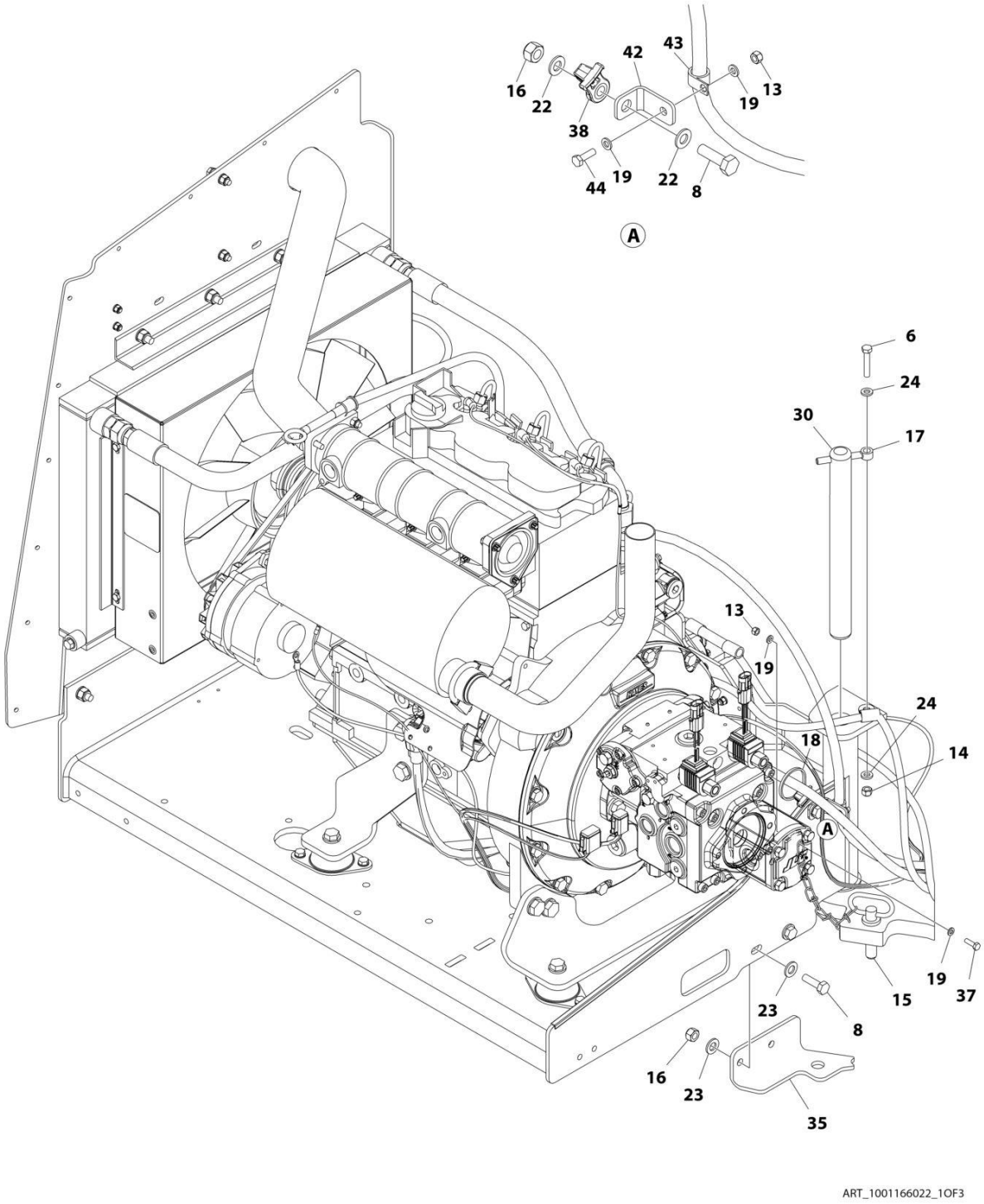

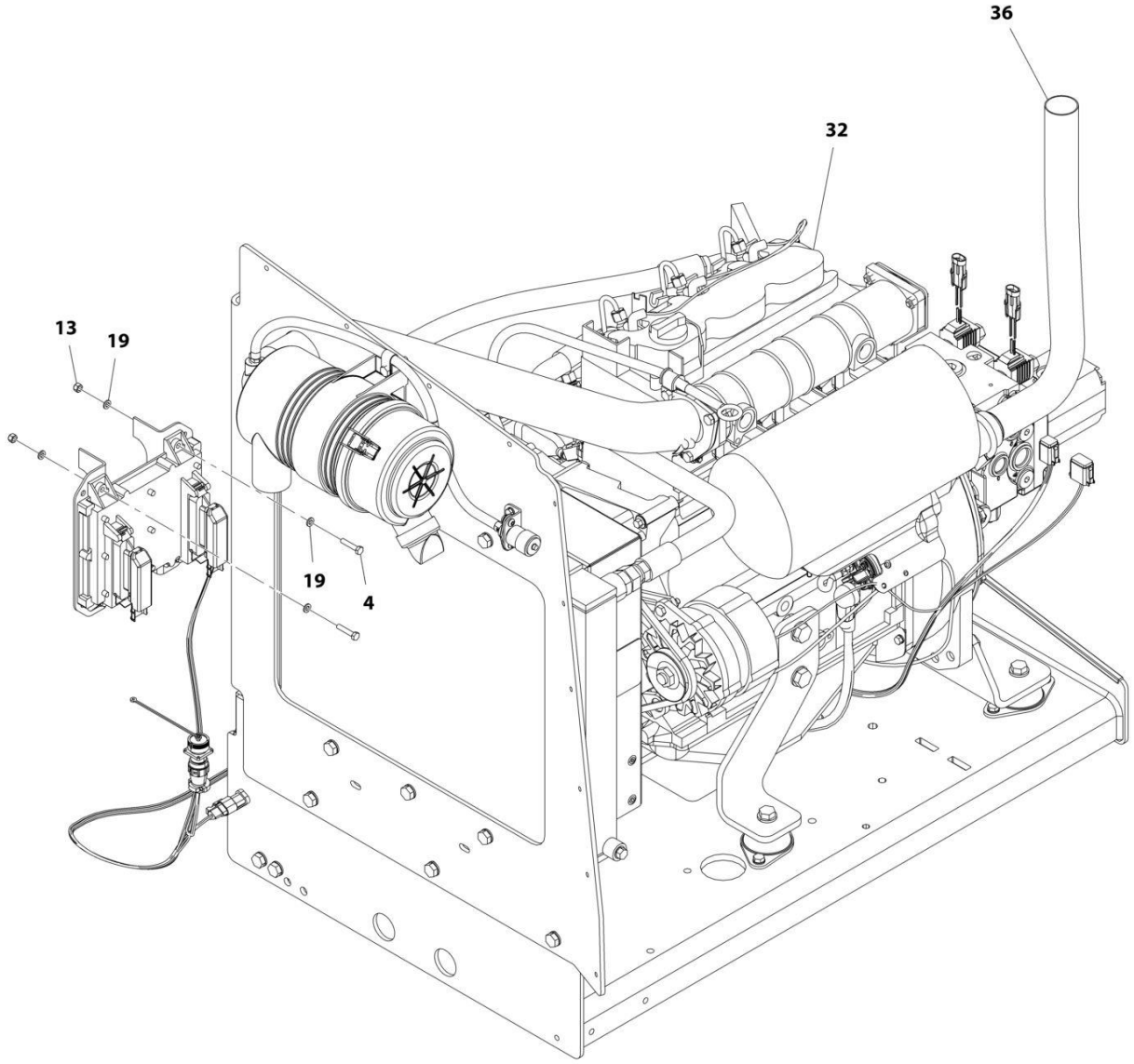

ART_1001166022_2OF3

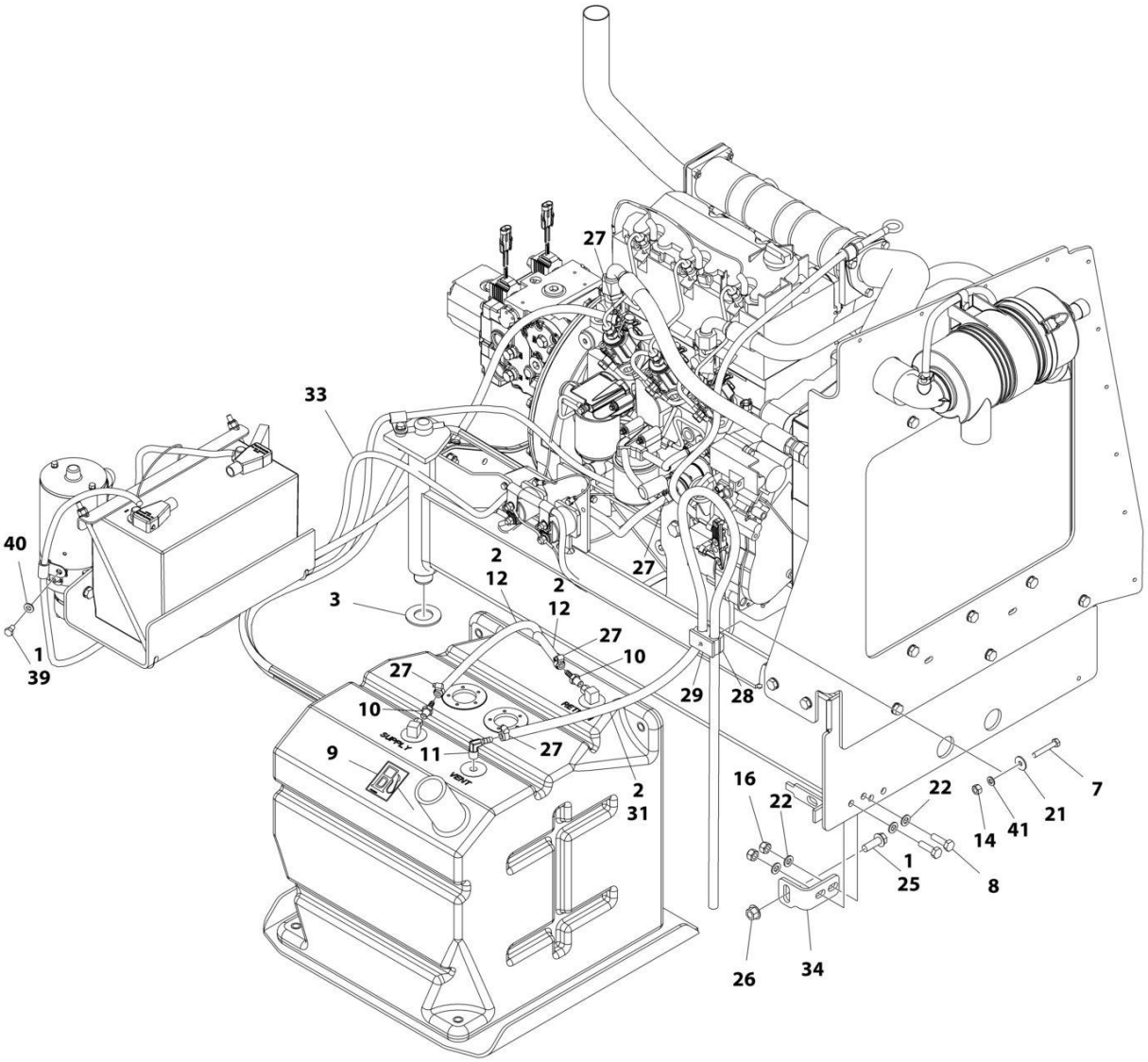

ART_1001166022_3OF3

FIGURE 3-1. ENGINE INSTALLATION - DEUTZ D2011 ENGINE (WITHOUT ARCTIC PACKAGE) (ANSI EXPORT, AUSTRALIAN, CE AND CHINA SPECS)

ITEM	PART NUMBER	QTY	DESCRIPTION	REV
	1001166022	Ref	ENGINE INSTALLATION - DEUTZ D2011 ENGINE (WITHOUT ARCTIC PACKAGE) (ANSI EXPORT, AUSTRALIAN, CE AND CHINA SPECS)	I
1	0100011	AR	Compound, Locking	
2	0100020	AR	Sealant, Pipe	
3	0440162	1	Bearing	
4	0700614	4	Bolt M6 x 30	
6	0700817	1	Bolt M8 x 45	
7	0700818	AR	Bolt M8 x 50	
7	0700821	AR	Bolt M8 x 65	
8	0761015	5	Bolt M10 x 35	
9	1701505	1	Decal - Diesel Fuel	
10	2180348	2	Fitting, Barbed	
11	2220313	1	Fitting, Barbed 90	
12	2720058	17 ft / 5.18m	Hose	
13	3290605	5	Nut M6	
14	3290805	AR	Nut M8	
15	3422532	1	Pin	
16	3291005	5	Nut M10	
17	3841143	1	Pin	
18	4240099	AR	Tie-Strap	
19	4811700	AR	Washer M6	
21	4811902	AR	Washer M8	
22	4812000	AR	Washer M10	
23	4812100	AR	Washer M12	
24	5240800	AR	Washer M8 Hardened	
25	5251215	1	Bolt M12 x 35	
26	5261200	1	Nut, Flange M12 Class10	
27	8405009	5	Clamp	
28	8750014	1	Clamp **(SN 0300203771 through 0300243703, SN E300000100 through E300005371, SN 1300007289 through 1300007393)**	
28	1320187	1	Clamp **(SN 0300243704 through 0300272360, SN E300005372 through E300007988, Except SN 0300272174 through 0300272184, Excluding E300007847)**	
29	8750031	1	Clamp **(SN 0300203771 through 0300243703, SN E300000100 through E300005371, SN 1300007289 through 1300007393)**	
29	1320190	1	Clamp **(SN 0300243704 through 0300272360, SN E300005372 through E300007988, Except SN 0300272174 through 0300272184, Excluding E300007847)**	
30	1001135196	1	Pin	
31	1001165035	6 ft/ 1.83m	Hose **(SN 0300203771 through 0300218460)**	
31	2750532	6 ft/ 1.83m	Hose **(SN 0300218461 through 0300272360, SN E300000100 through E300007988, SN 1300007289 through 1300007393, Except SN 0300272174 through 0300272184, Excluding E300007847)**	
32	1001166021	1	Engine and Pump Sub-Assembly - Deutz D2011 (Without Arctic Package) (ANSI Export, Australian and CE Specs) (See ENGINE AND PUMP SUB-ASSEMBLY - DEUTZ D2011 (WITHOUT ARCTIC PACKAGE) (ANSI EXPORT, AUSTRALIAN AND CE SPECS for Breakdown)	

ITEM	PART NUMBER	QTY	DESCRIPTION	REV
33	1001167038	1	Battery Cable Kit	F
33	70009004	1	Cable, Battery (Black) (Battery Negative, Auxiliary Power Pump, Turntable Ground to Engine Ground)	
33	70009005	1	Cable, Battery (Red) (Battery Positive, Auxiliary Power Relay, Starter Relay to Starter)	
33	70009002	1	Cable, Battery (Red) (Auxiliary Power Relay to Auxiliary Power Pump)	
34	1001167512	1	Bracket, Engine	
35	1001169823	1	Plate, Engine Lock	
36	1001172195	1	Pipe, Exhaust	
37	0760610	1	Bolt M6 x 20	
38	1001156107	1	Holder, Cable	
39	0641504	1	Bolt 5/16 x 1/2	
40	4711500	1	Washer 5/16	
41	4811900	AR	Washer M8	
42	1001148641	1	Bracket, Clamp Mounting	
43	1320224	1	Clamp, Cable	
44	0700610	1	Bolt M6 x 20	

FIGURE 3-2. ENGINE AND PUMP SUB-ASSEMBLY - DEUTZ D2011 (WITHOUT ARCTIC PACKAGE) (ANSI EXPORT, AUSTRALIAN AND CE SPECS)

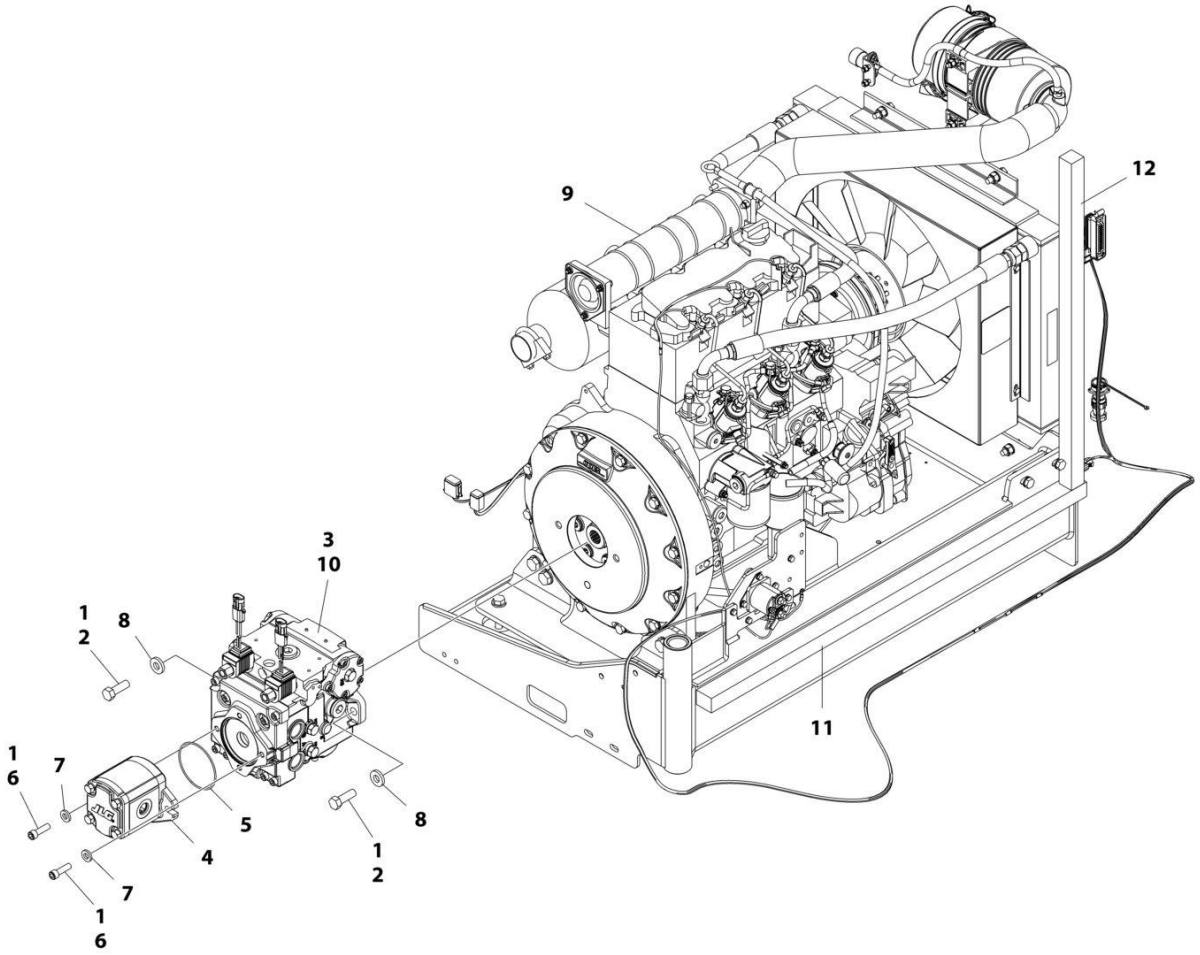

FIGURE 3-2. ENGINE AND PUMP SUB-ASSEMBLY - DEUTZ D2011 (WITHOUT ARCTIC PACKAGE) (ANSI EXPORT, AUSTRALIAN AND CE SPECS)

ITEM	PART NUMBER	QTY	DESCRIPTION	REV
	1001166021	Ref	ENGINE AND PUMP SUB-ASSEMBLY - DEUTZ D2011 (WITHOUT ARCTIC PACKAGE) (ANSI EXPORT, AUSTRALIAN AND CE SPECS)	E
1	0100011	AR	Compound, Locking	
2	0641812	2	Bolt 1/2 x 1-1/2	
3	3020037	AR	Lube	
4	3600242	1	Gear Pump Assembly (See GEAR PUMP ASSEMBLY for Breakdown) **(SN 0300203771 through 0300233151, SN E300000100 through E300004772)**	
4	1001214207	1	Gear Pump Assembly **(SN 0300233152 through 0300272360, SN E300004773 through E300007988, SN 1300007298 through 1300007393, Except SN 0300272174 through 0300272184, Excluding E300007847)**	
4	70006356	1	Seal Kit	
5	3790152	1	O-Ring	
6	3931620	AR	Capscrew 3/8 x 1-1/4	
6	3931618	AR	Capscrew 3/8 x 1-1/8	
7	4891600	2	Washer, 3/8 Hardened	
8	4891800	2	Washer, 1/2 Hardened	
9	1001166020	1	Engine Assembly - Deutz D2011 Engine (Without Arctic Package) (ANSI Export, Australian and CE Specs) (See ENGINE ASSEMBLY - DEUTZ D2011 ENGINE (WITHOUT ARCTIC PACKAGE) (ANSI EXPORT, AUSTRALIAN AND CE SPECS) for Breakdown)	
10	1001167036	1	Piston Pump Assembly (See PISTON PUMP ASSEMBLY for Breakdown)	
11	1001171953	1	Seal	
12	1001171954	1	Seal	

FIGURE 3-3. ENGINE ASSEMBLY - DEUTZ D2011 ENGINE (WITHOUT ARCTIC PACKAGE) (ANSI EXPORT, AUSTRALIAN AND CE SPECS)

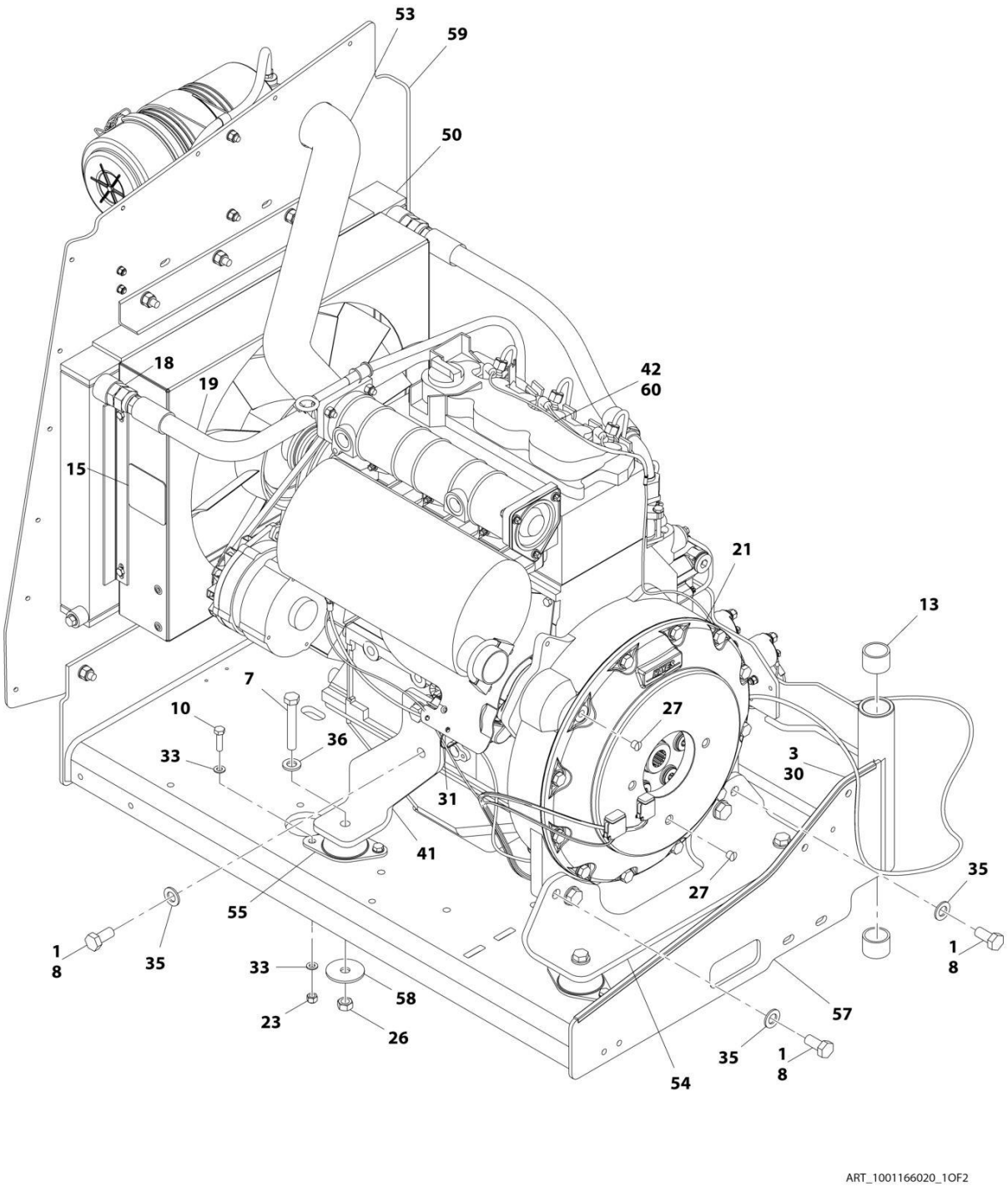

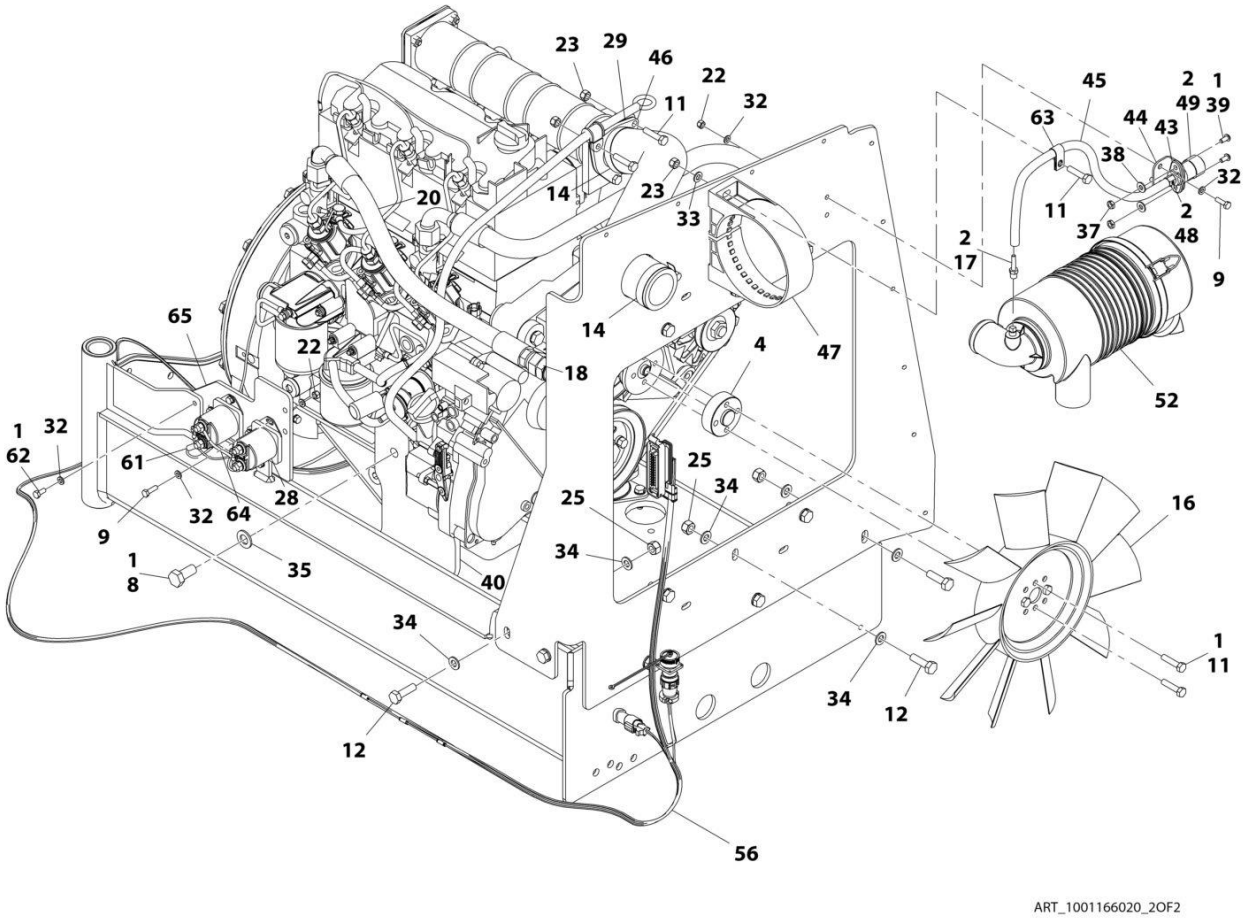
23
29
46
22
11
32
45
2
1
49
39
63
44
43
38
32
20
14
23
33
11
2
37
48
2
17
9
65
14
22
18
4
47
52
1
32
62
61
25
34
25
16
9
32
64
28
34
1
8
35
40
34
1
11
34
12
12
56
ART_1001166020_2OF2

FIGURE 3-3. ENGINE ASSEMBLY - DEUTZ D2011 ENGINE (WITHOUT ARCTIC PACKAGE) (ANSI EXPORT, AUSTRALIAN AND CE SPECS)

ITEM	PART NUMBER	QTY	DESCRIPTION	REV
	1001166020	Ref	ENGINE ASSEMBLY - DEUTZ D2011 ENGINE (WITHOUT ARCTIC PACKAGE) (ANSI EXPORT, AUSTRALIAN AND CE SPECS)	I
1	0100011	AR	Compound, Locking	
2	0100020	AR	Sealant, Pipe	
3	0100081	AR	Adhesive	
4	0080231	1	Spacer, Fan	
7	0711224	4	Bolt M12 x 80 Grade 10.9	
8	0771414	8	Bolt M14 x 30	
9	0760610	6	Bolt M6 x 20	
10	0760814	8	Bolt M8 x 30	
11	0760815	9	Bolt M8 x 35	
12	0761015	11	Bolt M10 x 35	
13	0961951	2	Bushing	
14	1320016	2	Clamp	
15	1703162	2	Decal - Caution Fan	
16	2060025	1	Fan	
17	2220315	1	Fitting, Barbed	
18	2220451	2	Fitting, Straight JIC/ORB	
19	2720398	1	Hose	
20	2720447	1	Hose	
21	2902065	1	Pump Coupling Kit (See PUMP COUPLING KIT for Breakdown)	
22	3290605	6	Nut, Lock, M6 x 1	
23	3290805	13	Nut, Lock M8 x 1.25	
25	3291005	11	Nut, Lock M10 x 1.5	
26	3331215	4	Nut, M12 x 1.75	
27	3520054	2	Plug	
28	3740067	2	Relay Assembly	
28	3300220	2	Nut	
28	3321001	1	Nut, #10	
28	3740140	1	Relay	
28	4761000	1	Washer, Lock #10	
28	1001111424	2	Washer	
29	3960407	1	Gasket	
30	4060805	2.25 ft/ 0.69m	Trim, Flex Shield	
31	4240099	AR	Tie-Strap	
32	4811700	15	Washer, M6	
33	4811900	20	Washer, M8	
34	4812000	22	Washer, M10	
35	4812200	8	Washer, M14	
36	5241200	4	Washer, M12 Hardened	
37	8305401	2	Nut, Jam .250	
38	8307109	2	Washer, .250	
39	8310548	2	Screw, 1/4 x 1/2	
40	1001132195	1	Bracket, Engine Mount	
41	1001132196	1	Bracket, Engine Mount	
42	1001136079	2.8 gal/ 10.5L	Oil, Motor	
43	1001138173	1	Support, Service Indicator	

ITEM	PART NUMBER	QTY	DESCRIPTION	REV
44	1001138175	1	Bracket, Service Indicator	
45	1001138248	2 ft/ 0.61m	Tube	
46	1001139819	1	Adapter, Air Intake	
47	1001141694	1	Clamp, Air Cleaner	
48	1001141995	1	Fitting, Barbed	
49	1001143390	1	Indicator	
50	1001150998	1	Radiator	
52	1001165388	1	Air Cleaner Assembly	
52	70003783	1	Element, Air Cleaner	
53	1001165389	1	Hose	
54	1001166717	1	Bracket, Engine Mount	
55	1001166718	4	Isolator, Engine Mount	
56	1001167111	1	Harness Engine - Deutz D2011 (See ELECTRICAL SECTION for Breakdown)	
57	1001167520	1	Tray, Engine	
58	1001168018	4	Washer, Snubbing	
59	1001168059	1	Plate, Radiator Mounting	
60	1001170693	1	Engine, Deutz D2011 (See ENGINE COMPONENTS - DEUTZ D2011 for Breakdown)	
61	4923451	1	Harness, Glow Plugs	
62	0760614	3	Bolt, M6 x 30	
63	8406109	1	Clip	
64	1001178859	1	Cable, Alternator	
65	1001179903	1	Bracket **(SN 0300201991 through 0300229928, SN E300002833 through E300004457)**	
65	1001214975	1	Bracket **(SN 0300229929 through 0300272360, SN E300004458 through E300007988, SN 1300007289 through 1300007393, Except SN 0300272174 through 0300272184, Excluding E300007847)**	

FIGURE 3-4. ENGINE INSTALLATION - DEUTZ D2011 ENGINE (WITH ARCTIC PACKAGE) (ANSI EXPORT AND CHINA SPECS)

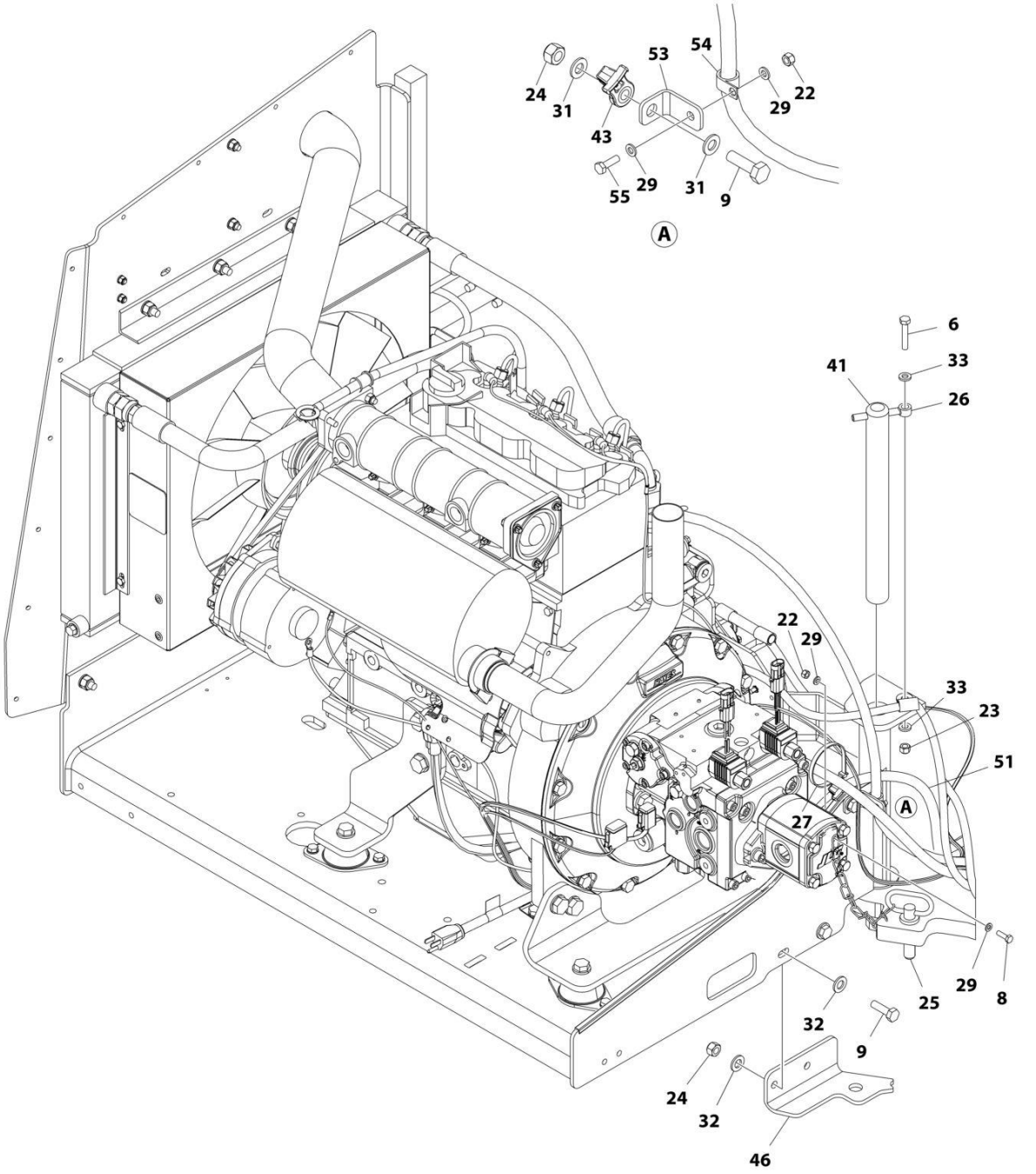

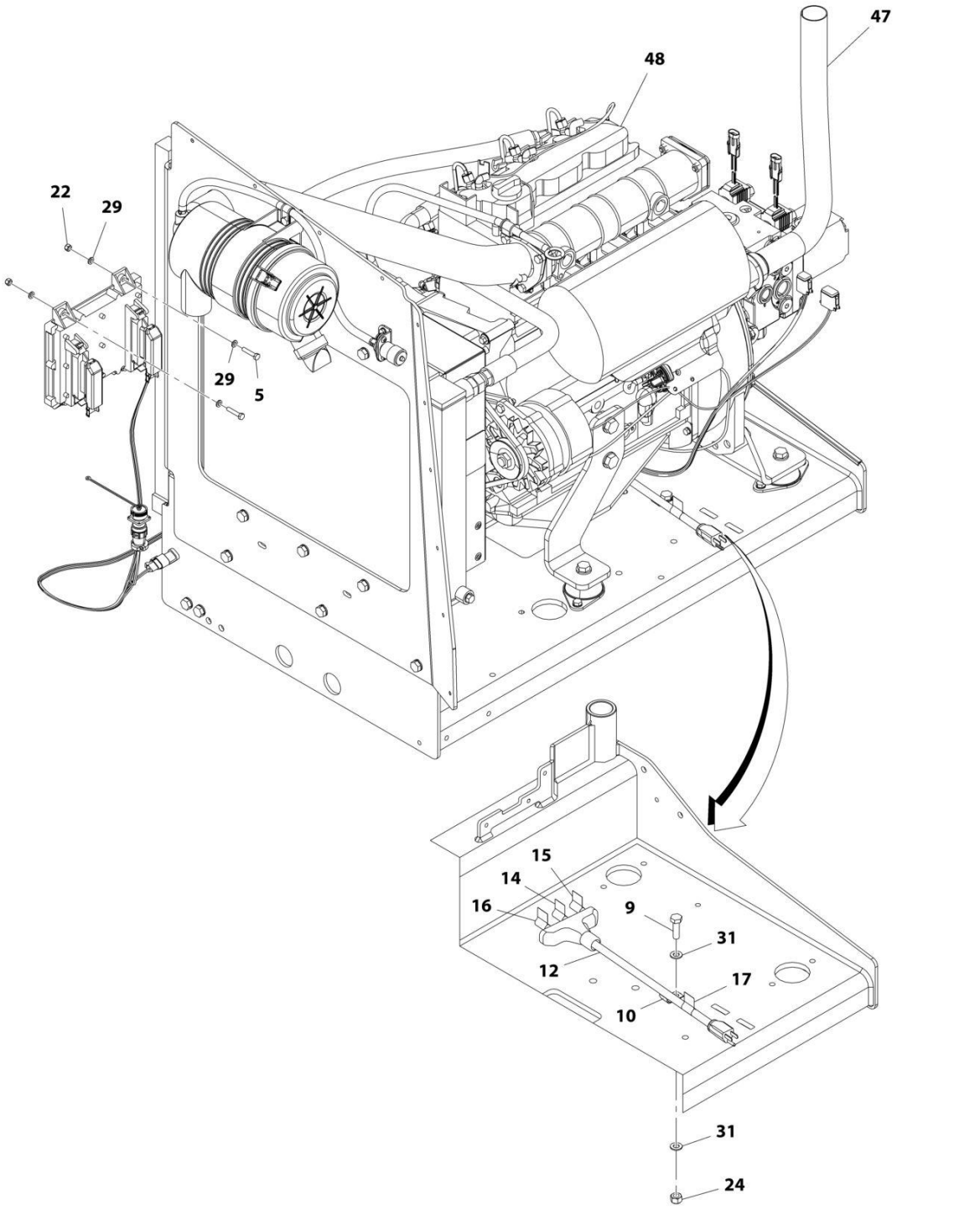
47
48
22
29
29
5
15
14
16
9
31
12
17
10
31
24
ART_1001166023_2OF3

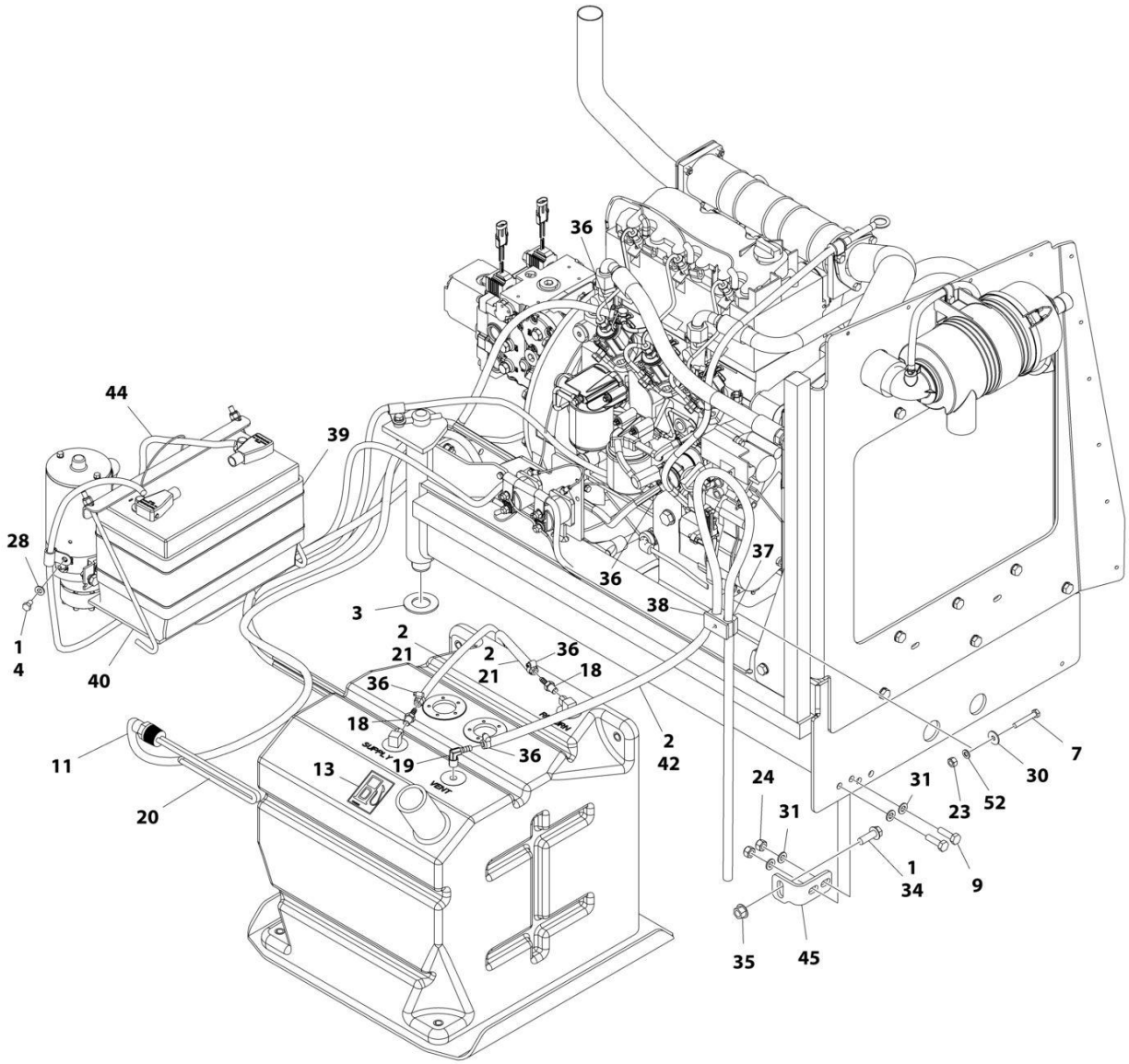

ART_1001166023_3OF3

FIGURE 3-4. ENGINE INSTALLATION - DEUTZ D2011 ENGINE (WITH ARCTIC PACKAGE) (ANSI EXPORT AND CHINA SPECS)

ITEM	PART NUMBER	QTY	DESCRIPTION	REV
	1001166023	Ref	ENGINE INSTALLATION - DEUTZ D2011 ENGINE (WITH ARCTIC PACKAGE) (ANSI EXPORT AND CHINA SPECS)	G
1	0100011	AR	Compound, Locking	
2	0100020	AR	Sealant, Pipe	
3	0440162	1	Bearing	
4	0641504	1	Bolt 5/16 x 1/2	
5	0700614	4	Bolt M6 x 30	
6	0700817	1	Bolt M8 x 45	
7	0700818	AR	Bolt M8 x 50	
7	0700821	AR	Bolt M8 x 65	
8	0760610	1	Bolt M6 x 20	
9	0761015	6	Bolt M10 x 35	
10	1320223	1	Clip	
11	1060625	1	Cable, Immersion Heater	
12	1060626	1	Plug, 3 Way	
13	1701505	1	Decal - Diesel Fuel	
14	1702941	1	Decal - Battery Heater	
15	1702942	1	Decal - Engine Block Heater	
16	1702943	1	Decal - Hydraulic Tank Heater	
17	1702944	1	Decal - Heater Cord	
18	2180348	2	Fitting, Barbed	
19	2220313	1	Fitting, Barbed 90	
20	2580050	1	Heater, Hydraulic Tank	
21	2720058	17 ft / 5.18m	Hose	
22	3290605	AR	Nut, Lock M6 x 1	
23	3290805	AR	Nut, Lock M8	
24	3291005	6	Nut M10	
25	3422532	1	Pin	
26	3841143	1	Keeper, Pin	
27	4240099	AR	Tie-Strap	
28	4711500	AR	Washer, 5/16	
29	4811700	AR	Washer, M6	
30	4811902	AR	Washer, M8	
31	4812000	AR	Washer, M10	
32	4812100	AR	Washer, M12	
33	5240800	AR	Washer, M8 Hardened	
34	5251215	1	Bolt M12 x 35	
35	5261200	1	Nut, Flange M12 Class10	
36	8405009	5	Clamp	
37	8750014	1	Clamp **(SN 0300203771 through 0300243703, SN E300000100 through E300005371, SN 1300007289 through 1300007393)**	
37	1320187	1	Clamp **(SN 0300243704 through 0300272360, SN E300005372 through E300007988, Except SN 0300272174 through 0300272184, Excluding E300007847)**	
38	8750031	1	Clamp **(SN 0300203771 through 0300243703, SN E300000100 through E300005371, SN 1300007289 through 1300007393)**	
38	1320190	1	Clamp **(SN 0300243704 through 0300272360, SN E300005372 through E300007988, Except SN 0300272174 through 0300272184, Excluding E300007847)**	

ITEM	PART NUMBER	QTY	DESCRIPTION	REV
39	1001097000	1	Heater, Battery	
40	1001119278	1	Insulate	
41	1001135196	1	Pin	
42	1001165035	6 ft/ 1.83m	Hose **(SN 0300203771 through 0300218460)**	
42	2750532	6 ft/ 1.83m	Hose **(SN 0300218461 through 0300272360, SN E300000100 through E300007988, SN 1300007289 through 1300007393, Except SN 0300272174 through 0300272184, Excluding E300007847)**	
43	1001156107	1	Holder, Cable	
44	1001167038	1	Battery Cable Kit	
44	70009004	1	Cable, Battery (Black) (Battery Negative, Auxiliary Power Pump, Turntable Ground to Engine Ground)	
44	70009005	1	Cable, Battery (Red) (Battery Positive, Auxiliary Power Relay, Starter Relay to Starter)	
44	70009002	1	Cable, Battery (Red) (Auxiliary Power Relay to Auxiliary Power Pump)	
45	1001167512	1	Bracket, Engine	
46	1001169823	1	Plate, Engine Lock	
47	1001172195	1	Pipe, Exhaust	
48	1001174784	1	Engine and Pump Sub-Assembly - Deutz D2011 (With Arctic Package) (ANSI Export Spec) (See ENGINE AND PUMP SUB-ASSEMBLY - DEUTZ D2011 (WITH ARCTIC PACKAGE) (ANSI EXPORT SPEC) for Breakdown)	
51	1001150918	1	Cable, Extension Cord	
52	4811900	AR	Washer M8	
53	1001148641	1	Bracket, Clamp Mounting	
54	1320224	1	Clamp, Cable	
55	0700610	1	Bolt M6 x 20	

FIGURE 3-5. ENGINE AND PUMP SUB-ASSEMBLY - DEUTZ D2011 (WITH ARCTIC PACKAGE) (ANSI EXPORT SPEC)

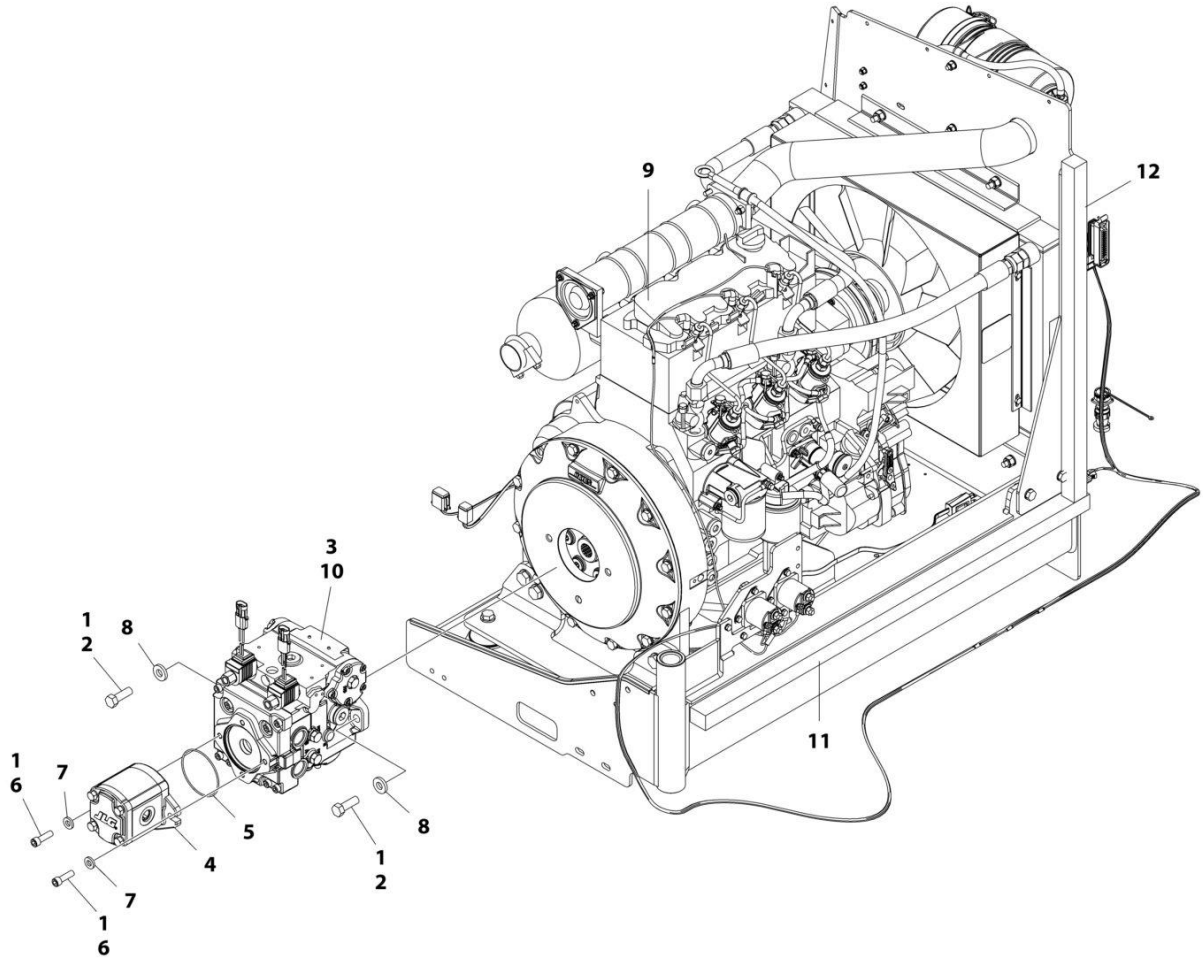

FIGURE 3-5. ENGINE AND PUMP SUB-ASSEMBLY - DEUTZ D2011 (WITH ARCTIC PACKAGE) (ANSI EXPORT SPEC)

ITEM	PART NUMBER	QTY	DESCRIPTION	REV
	1001174784	Ref	ENGINE AND PUMP SUB-ASSEMBLY - DEUTZ D2011 (WITH ARCTIC PACKAGE) (ANSI EXPORT SPEC)	E
1	0100011	AR	Compound, Locking	
2	0641812	2	Bolt 1/2 x 1-1/2	
3	3020037	AR	Lube	
4	3600242	1	Gear Pump Assembly (See GEAR PUMP ASSEMBLY for Breakdown) **(SN 0300203771 through 0300233151, SN E300000100 through E300004772)**	
4	1001214207	1	Gear Pump Assembly **(SN 0300233152 through 0300272360, SN E300004773 through E300007988, SN 1300007289 through 1300007393, Except SN 0300272174 through 0300272184, Excluding E300007847)**	
4	70006356	1	Seal Kit	
5	3790152	1	O-Ring	
6	3931620	AR	Capscrew 3/8 x 1-1/4	
6	3931618	AR	Capscrew 3/8 x 1 1/8	
7	4891600	2	Washer 3/8 Hardened	
8	4891800	2	Washer 1/2 Hardened	
9	1001174783	1	Engine Assembly - Deutz D2011 Engine (With Arctic Package) (ANSI Export Spec) (See ENGINE ASSEMBLY - DEUTZ D2011 ENGINE (WITH ARCTIC PACKAGE) (ANSI EXPORT SPEC) for Breakdown)	
10	1001167036	1	Piston Pump Assembly (See PISTON PUMP ASSEMBLY for Breakdown)	
11	1001171953	1	Seal	
12	1001171954	1	Seal	

FIGURE 3-6. ENGINE ASSEMBLY - DEUTZ D2011 ENGINE (WITH ARCTIC PACKAGE) (ANSI EXPORT SPEC)

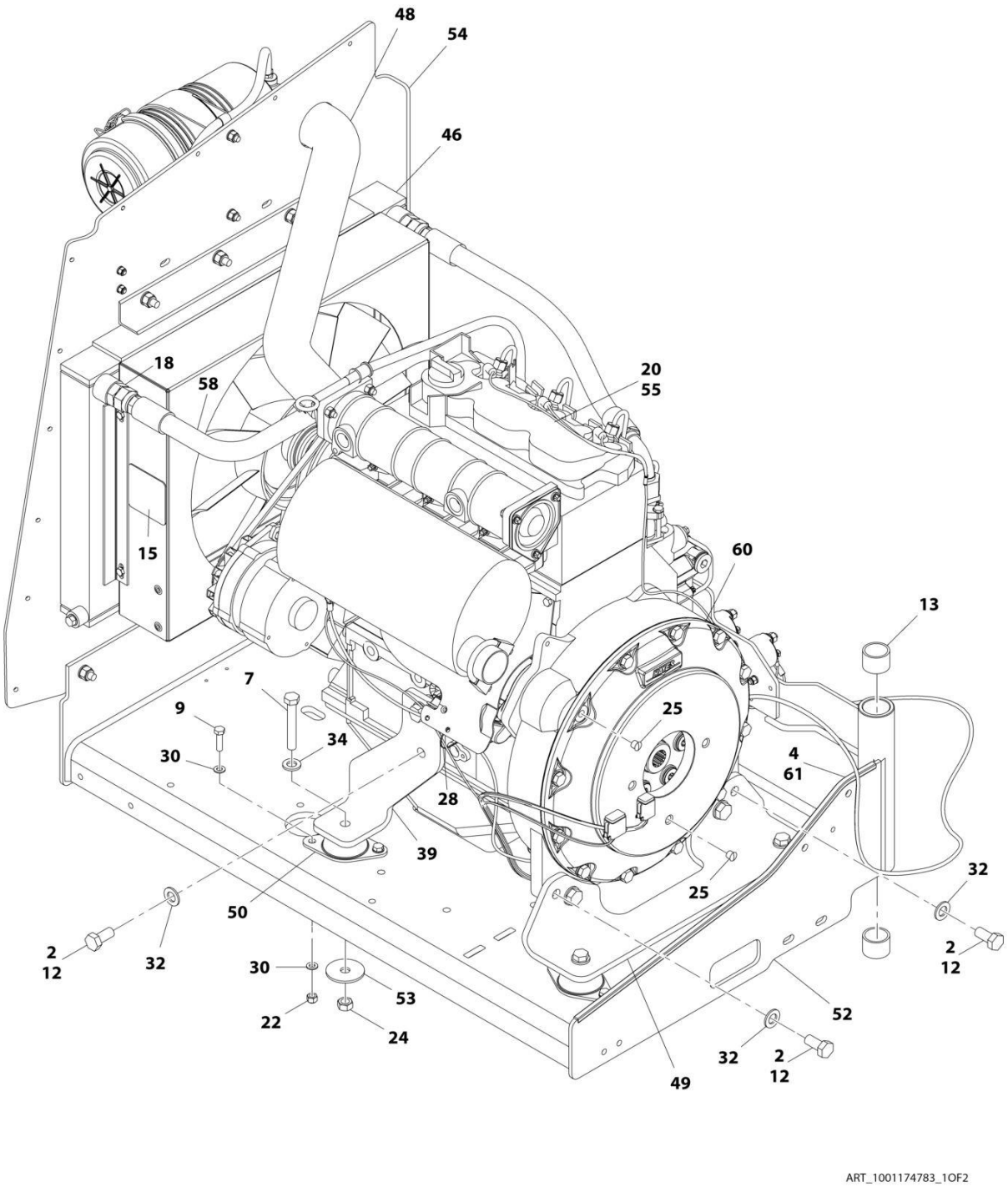

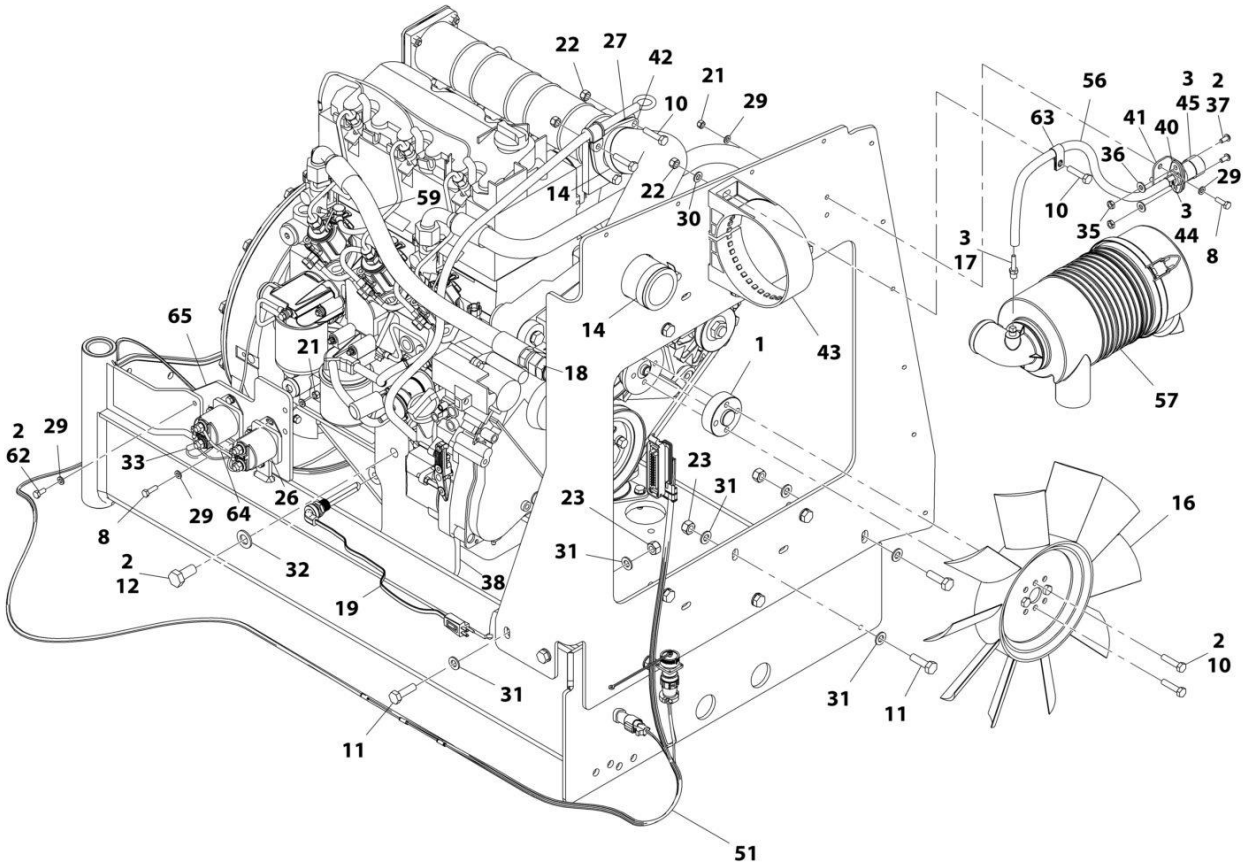

ART_1001174783_2OF2

FIGURE 3-6. ENGINE ASSEMBLY - DEUTZ D2011 ENGINE (WITH ARCTIC PACKAGE) (ANSI EXPORT SPEC)

ITEM	PART NUMBER	QTY	DESCRIPTION	REV
	1001174783	Ref	ENGINE ASSEMBLY - DEUTZ D2011 ENGINE (WITH ARCTIC PACKAGE) (ANSI EXPORT SPEC)	H
1	0080231	1	Spacer, Fan	
2	0100011	AR	Compound, Locking	
3	0100020	AR	Sealant, Pipe	
4	0100081	AR	Adhesive	
7	0711224	4	Bolt M12 x 80 Grade 10.9	
8	0760610	6	Bolt M6 x 20	
9	0760814	8	Bolt M8 x 30	
10	0760815	9	Bolt M8 x 35	
11	0761015	11	Bolt M10 x 35	
12	0771414	8	Bolt M14 x 30	
13	0961951	2	Bushing	
14	1320016	2	Clamp	
15	1703162	2	Decal - Caution Fan	
16	2060025	1	Fan	
17	2220315	1	Fitting, Barbed	
18	2220451	2	Fitting, Straight JIC/ORB	
19	2580062	1	Heater, Engine Block	
20	3020044	2.8 gal / 10.5L	Oil, Motor	
21	3290605	6	Nut, Lock M6 x 1	
22	3290805	13	Nut, Lock M8 x 1.25	
23	3291005	11	Nut, Lock M10 x 1.5	
24	3331215	4	Nut, M12 x 1.75	
25	3520054	2	Plug	
26	3740067	2	Relay Assembly	
26	3300220	2	Nut	
26	3321001	1	Nut, #10	
26	3740140	1	Relay	
26	4761000	1	Washer, Lock #10	
26	1001111424	2	Washer	
27	3960407	1	Gasket	
28	4240099	AR	Tie-Strap (Not Shown)	
29	4811700	15	Washer, M6	
30	4811900	20	Washer, M8	
31	4812000	22	Washer, M10	
32	4812200	8	Washer, M14	
33	4923451	1	Harness, Glow Plugs	
34	5241200	4	Washer, M12 Hardened	
35	8305401	2	Nut, Jam .250	
36	8307109	2	Washer, .250	
37	8310548	2	Screw, 1/4 x 1/2	
38	1001132195	1	Bracket, Engine Mount	
39	1001132196	1	Bracket, Engine Mount	
40	1001138173	1	Support, Service Indicator	
41	1001138175	1	Bracket, Service Indicator	
42	1001139819	1	Adapter, Air Intake	
43	1001141694	1	Clamp, Air Cleaner	

ITEM	PART NUMBER	QTY	DESCRIPTION	REV
44	1001141995	1	Fitting, Barbed	
45	1001143390	1	Indicator	
46	1001150998	1	Radiator	
48	1001165389	1	Hose	
49	1001166717	1	Bracket, Engine Mount	
50	1001166718	4	Isolator, Engine Mount	
51	1001167111	1	Harness Engine - Deutz D2011 (See ELECTRICAL SECTION for Breakdown)	
52	1001167520	1	Tray, Engine	
53	1001168018	4	Washer, Snubbing	
54	1001168059	1	Plate, Radiator Mounting	
55	1001170693	1	Engine, Deutz D2011 (See ENGINE COMPONENTS - DEUTZ D2011 for Breakdown)	
56	1001138248	2 ft/ 0.61m	Tube	
57	1001165388	1	Air Cleaner Assembly	
57	70003783	1	Element, Air Cleaner	
58	2720398	1	Hose	
59	2720447	1	Hose	
60	2902065	1	Pump Coupling Kit (See PUMP COUPLING KIT for Breakdown)	
61	4060805	2.25 ft/ 0.69m	Trim, Flex Shield	
62	0760614	3	Bolt, M6 x 30	
63	8406109	1	Clip	
64	1001178859	1	Cable, Alternator	
65	1001179903	1	Bracket **(SN 0300201991 through 0300229928, SN E300002833 through E300004457)**	
65	1001214975	1	Bracket **(SN 0300229929 through 0300272360, SN E300004458 through E300007988, SN 1300007289 through 1300007393, Except SN 0300272174 through 0300272184, Excluding E300007847)**	

FIGURE 3-7. ENGINE INSTALLATION - DEUTZ D2011 ENGINE (STAGE V) (WITHOUT ARCTIC PACKAGE) (CE SPECS)

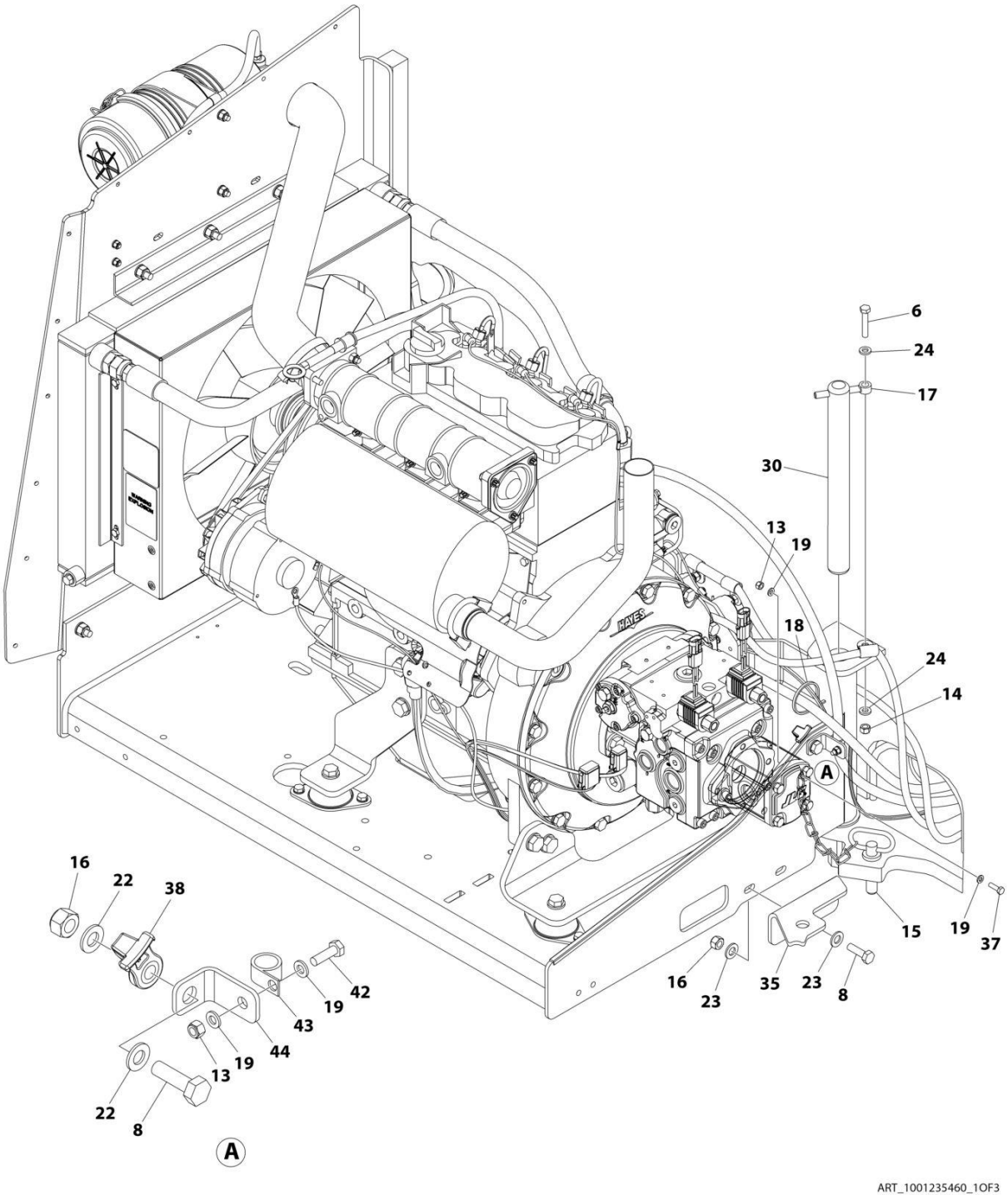

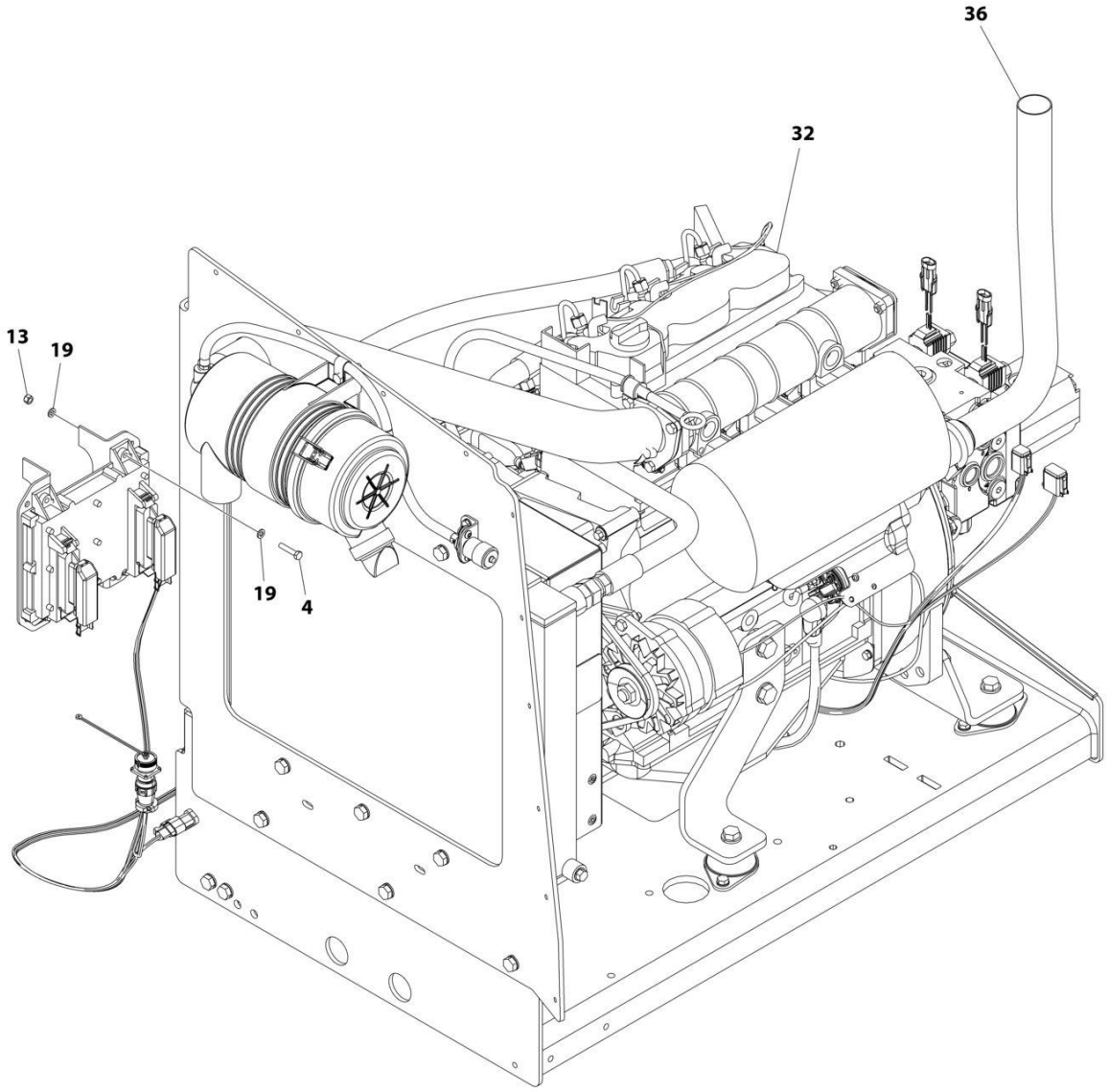

ART_1001235460_2OF3

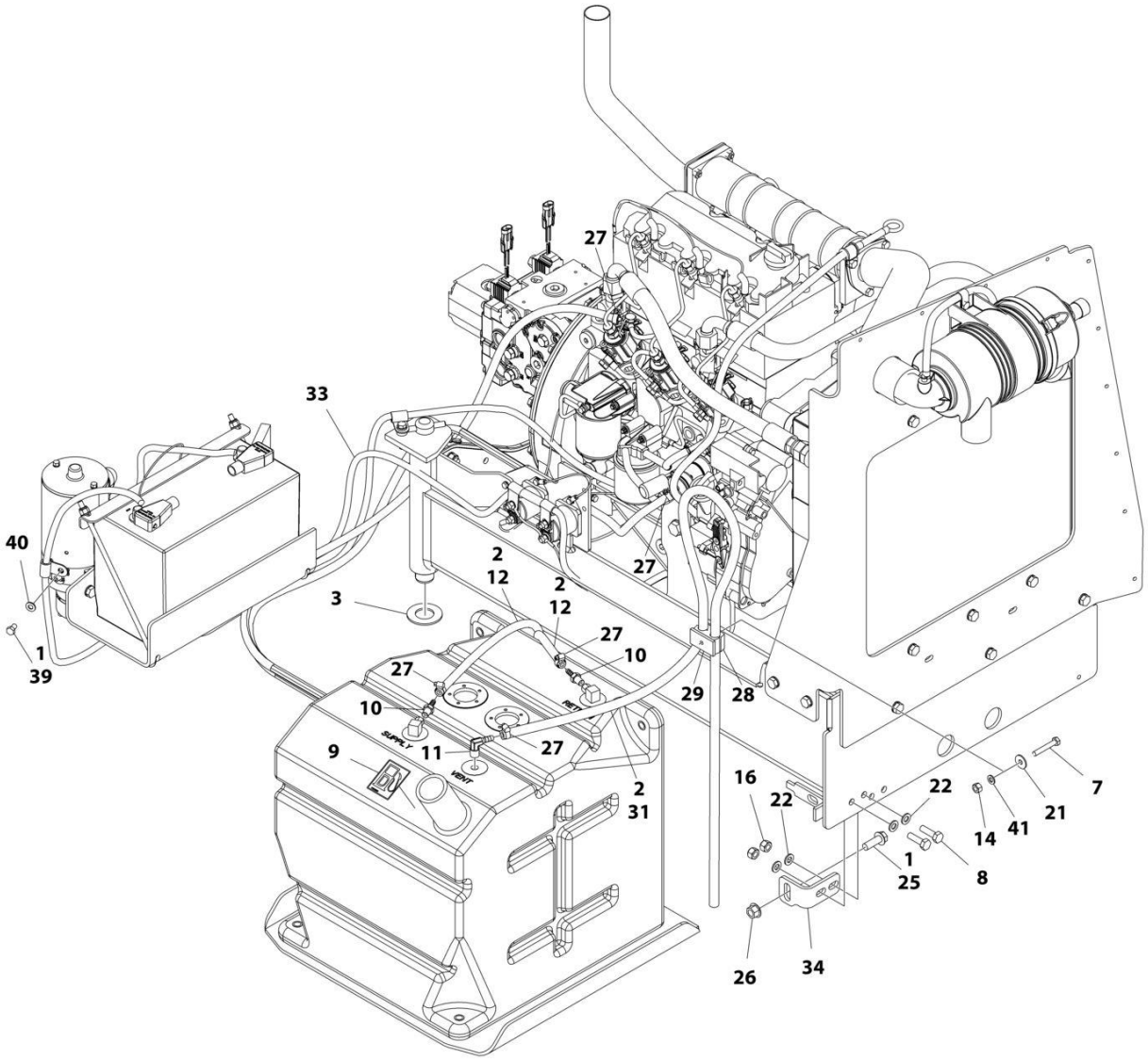

ART_1001235460_3OF3

FIGURE 3-7. ENGINE INSTALLATION - DEUTZ D2011 ENGINE (STAGE V) (WITHOUT ARCTIC PACKAGE) (CE SPECS)

ITEM	PART NUMBER	QTY	DESCRIPTION	REV
	1001235460	Ref	ENGINE INSTALLATION - DEUTZ D2011 ENGINE (STAGE V) (WITHOUT ARCTIC PACKAGE)	C
1	0100011	AR	Compound, Locking	
2	0100020	AR	Sealant, Pipe	
3	0440162	1	Bearing	
4	0700614	4	Bolt M6 x 30	
6	0700817	1	Bolt M8 x 45	
7	0700821	1	Bolt M8 x 65	
8	0761015	5	Bolt M10 x 35	
9	1701505	1	Decal - Diesel Fuel	
10	2180348	2	Fitting, Barbed	
11	2220313	1	Fitting, Barbed 90	
12	2720058	17 ft / 5.18m	Hose	
13	3290605	6	Nut M6	
14	3290805	2	Nut M8	
15	3422532	1	Pin	
16	3291005	5	Nut M10	
17	3841143	1	Pin	
18	4240099	AR	Tie-Strap	
19	4811700	12	Washer M6	
21	4811902	1	Washer M8	
22	4812000	6	Washer M10	
23	4812100	4	Washer M12	
24	5240800	2	Washer M8	
25	5251215	1	Bolt M12 x 35	
26	5261200	1	Nut M12 Class10	
27	8405009	5	Clamp	
28	1320187	1	Clamp	
29	1320190	1	Clamp	
30	1001135196	1	Pin	
31	2750532	6 ft/ 1.83m	Hose	
32	1001235461	1	Engine and Pump Sub-Assembly - Deutz D2011 (Without Arctic Package) (CE Specs) (See ENGINE AND PUMP SUB-ASSEMBLY - DEUTZ D2011 (STAGE V) (WITHOUT ARCTIC PACKAGE) (CE SPECS for Breakdown)	
33	1001167038	1	Battery Cable Kit	
33	70009004	1	Cable, Battery (Black) (Battery Negative, Auxiliary Power Pump, Turntable Ground to Engine Ground)	
33	70009005	1	Cable, Battery (Red) (Battery Positive, Auxiliary Power Relay, Starter Relay to Starter)	
33	70009002	1	Cable, Battery (Red) (Auxiliary Power Relay to Auxiliary Power Pump)	
34	1001167512	1	Bracket, Engine	
35	1001169823	1	Plate, Engine Lock	
36	1001172195	1	Pipe, Exhaust	
37	0760610	1	Bolt M6 x 20	
38	1001156107	1	Holder, Cable	
39	0641504	1	Bolt 5/16 x 1/2	
40	4711500	1	Washer 5/16	

ITEM	PART NUMBER	QTY	DESCRIPTION	REV
41	4811900	1	Washer M8	
42	0700610	1	Bolt M6 x 20	
43	1320224	1	Clamp, Cable	
44	1001148641	1	Bracket, Clamp Mounting	

FIGURE 3-8. ENGINE AND PUMP SUB-ASSEMBLY - DEUTZ D2011 (STAGE V) (WITHOUT ARCTIC PACKAGE) (CE SPECS)

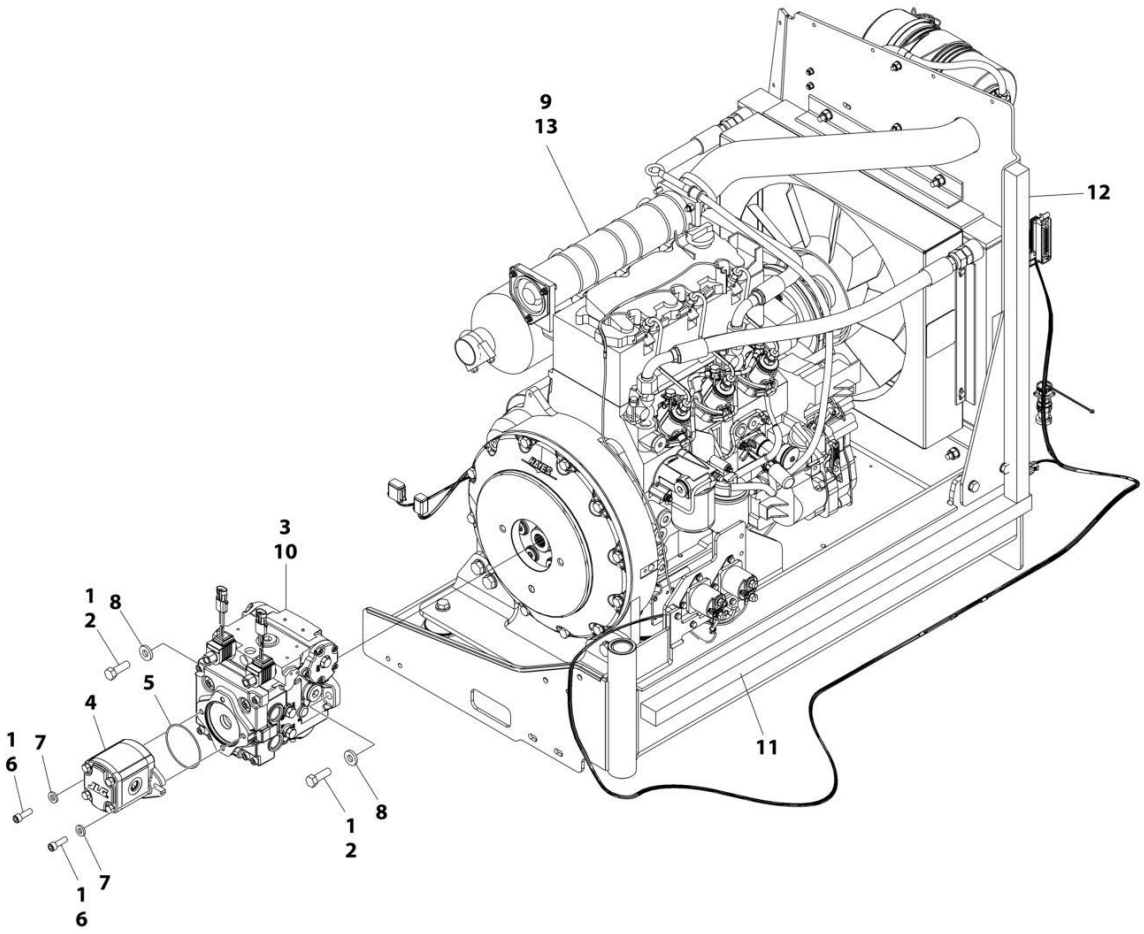

FIGURE 3-8. ENGINE AND PUMP SUB-ASSEMBLY - DEUTZ D2011 (STAGE V) (WITHOUT ARCTIC PACKAGE) (CE SPECS)

ITEM	PART NUMBER	QTY	DESCRIPTION	REV
	1001235461	Ref	ENGINE AND PUMP SUB-ASSEMBLY - DEUTZ D2011 (STAGE V) (WITHOUT ARCTIC PACKAGE)	B
1	0100011	AR	Compound, Locking	
2	0641812	2	Bolt 1/2 x 1-1/2	
3	3020037	AR	Lube	
4	1001214207	1	Gear Pump Assembly	
4	70006356	1	Seal Kit - 1001214207 Pump	
5	3790152	1	O-Ring	
6	3931618	2	Capscrew 3/8 x 1-1/8	
7	4891600	2	Washer 3/8	
8	4891800	2	Washer 1/2	
9	1001235462	1	Engine Assembly - Deutz D2011 Engine (Stage V) (Without Arctic Package) (CE Specs) (See ENGINE ASSEMBLY - DEUTZ D2011 (STAGE V) ENGINE (WITHOUT ARCTIC PACKAGE) (CE SPECS) for Breakdown)	
10	1001167036	1	Piston Pump Assembly (See PISTON PUMP ASSEMBLY for Breakdown)	
11	1001171953	1	Seal	
12	1001171954	1	Seal	
13	1001235455	1	Engine, Deutz D2011 (Stage V) (See ENGINE COMPONENTS - DEUTZ D2011 ENGINE (STAGE V) for Breakdown)	

FIGURE 3-9. ENGINE ASSEMBLY - DEUTZ D2011 ENGINE (STAGE V) (WITHOUT ARCTIC PACKAGE) (CE SPECS)

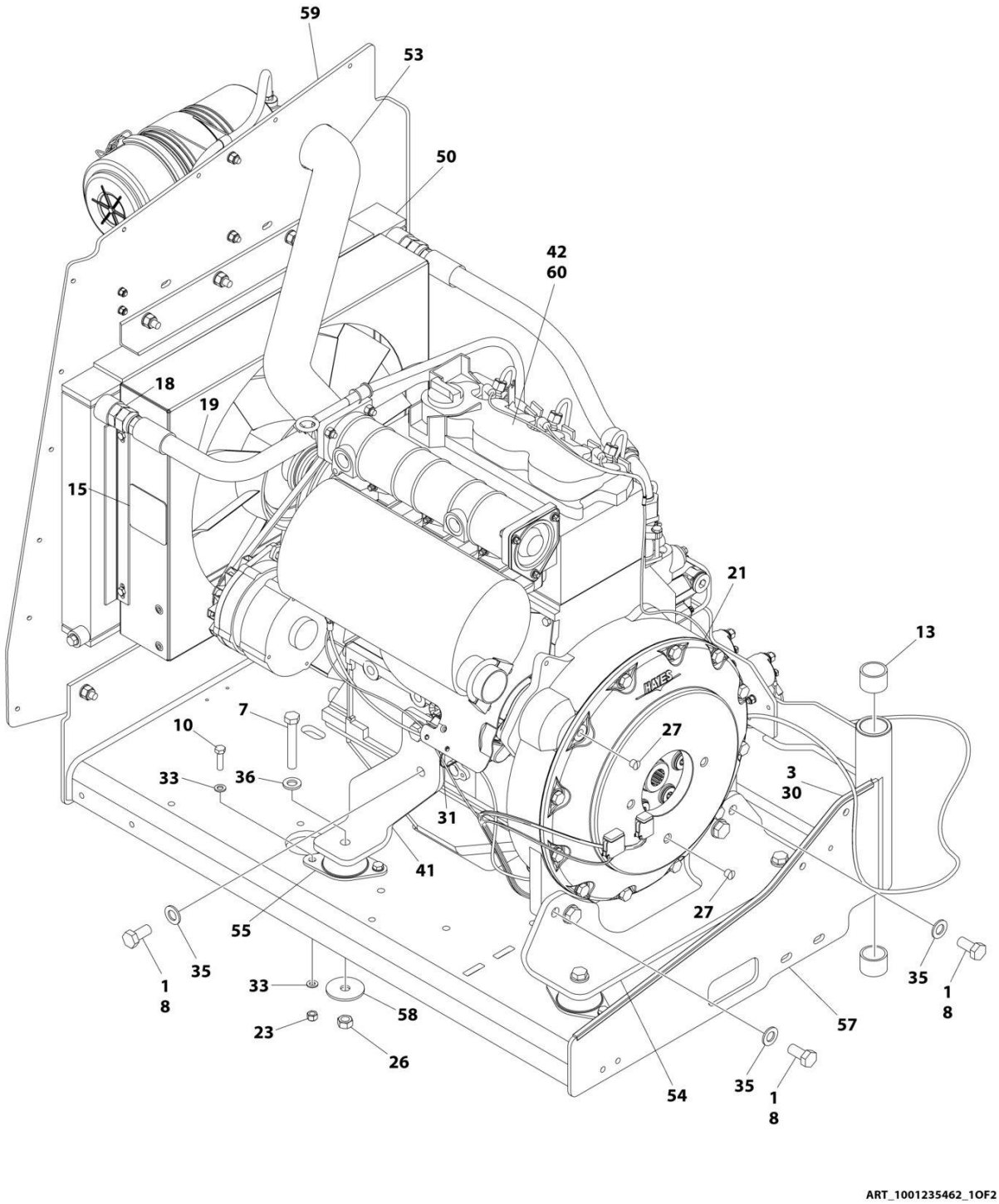

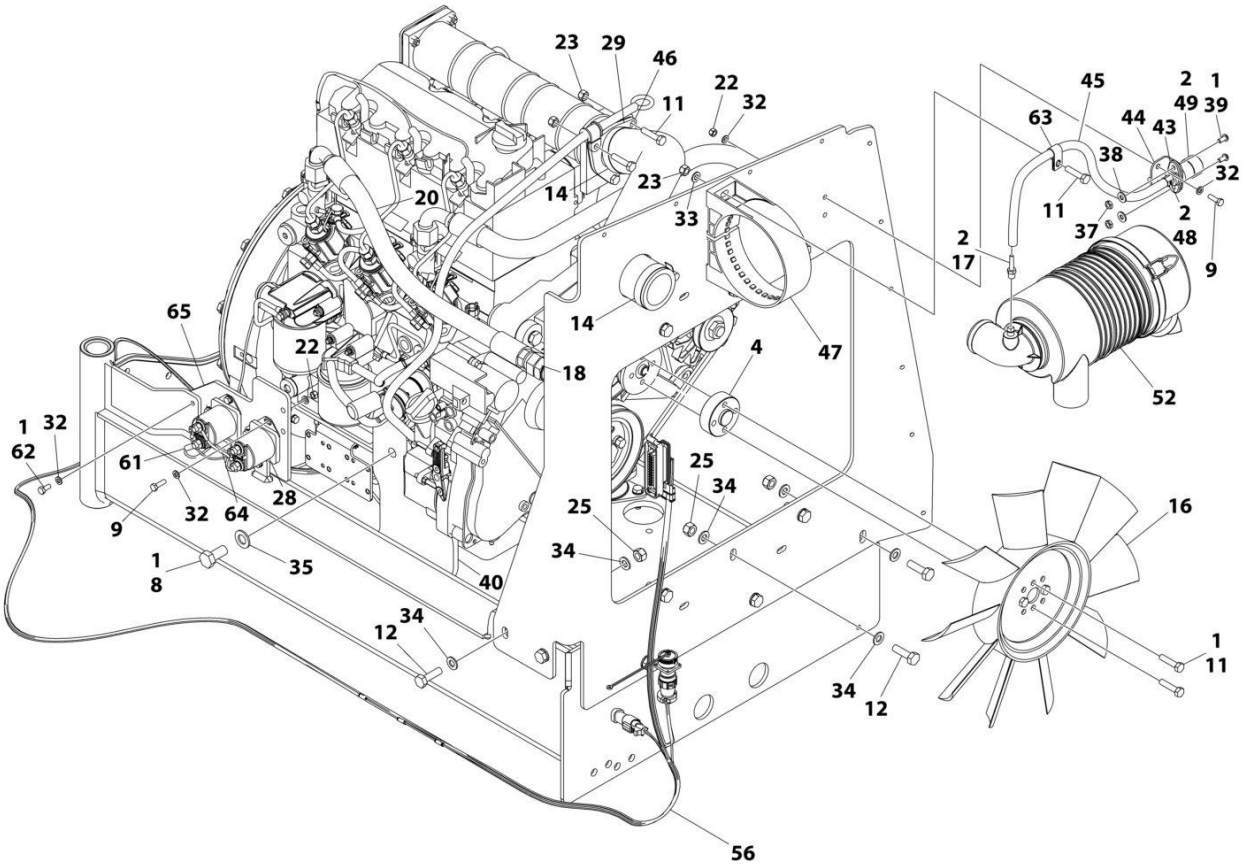
23
29
46
22
32
11
45
2
1
49
39
63
44
43
38
32
23
14
20
33
11
2
37
48
2
17
9
65
14
47
4
22
18
52
1
32
62
61
25
34
25
16
9
32
64
28
34
1
8
35
40
12
34
1
11
34
12
56
ART_1001235462_2OF2

FIGURE 3-9. ENGINE ASSEMBLY - DEUTZ D2011 ENGINE (STAGE V) (WITHOUT ARCTIC PACKAGE) (CE SPECS)

ITEM	PART NUMBER	QTY	DESCRIPTION	REV
	1001235462	Ref	ENGINE ASSEMBLY - DEUTZ D2011 ENGINE (STAGE V) (WITHOUT ARCTIC PACKAGE)	C
1	0100011	AR	Compound, Locking	
2	0100020	AR	Sealant, Pipe	
3	0100081	AR	Adhesive	
4	0080231	1	Spacer, Fan	
7	0711224	4	Bolt M12 x 80	
8	0771414	8	Bolt M14 x 30	
9	0760610	6	Bolt M6 x 20	
10	0760814	8	Bolt M8 x 30	
11	0760815	9	Bolt M8 x 35	
12	0761015	11	Bolt M10 x 35	
13	0961951	2	Bushing	
14	1320016	2	Clamp	
15	1703162	2	Decal - Caution Fan	
16	2060025	1	Fan	
17	2220315	1	Fitting, Barbed	
18	2220451	2	Fitting, Straight JIC/ORB	
19	2720398	1	Hose	
20	2720447	1	Hose	
21	2902065	1	Pump Coupling Kit (See PUMP COUPLING KIT for Breakdown)	
22	3290605	6	Nut M6	
23	3290805	13	Nut M8	
25	3291005	11	Nut M10	
26	3331215	4	Nut M12	
27	3520054	2	Plug	
28	3740067	2	Relay Assembly	
28	3300220	2	Nut	
28	3321001	1	Nut #10-32	
28	3740140	1	Relay	
28	4761000	1	Washer #10	
28	1001111424	2	Washer	
29	3960407	1	Gasket	
30	4060805	2.25 ft / 0.69m	Trim, Flex Shield	
31	4240099	AR	Tie-Strap	
32	4811700	15	Washer M6	
33	4811900	20	Washer M8	
34	4812000	22	Washer M10	
35	4812200	8	Washer M14	
36	5241200	4	Washer M12 Hardened	
37	8305401	2	Nut Jam .250-20	
38	8307109	2	Washer .250	
39	8310548	2	Screw 1/4 NC x 1/2	
40	1001132195	1	Bracket, Engine Mount	
41	1001132196	1	Bracket, Engine Mount	
42	1001136079	3 gal/ 11.3L	Oil, Motor	
43	1001138173	1	Support, Service Indicator	

ITEM	PART NUMBER	QTY	DESCRIPTION	REV
44	1001138175	1	Bracket, Service Indicator	
45	1001138248	2 ft /0.61m	Tube	
46	1001139819	1	Adapter, Air Intake	
47	1001141694	1	Clamp, Air Cleaner	
48	1001141995	1	Fitting, Barbed	
49	1001143390	1	Indicator	
50	1001150998	1	Radiator	
52	1001165388	1	Air Cleaner Assembly	
52	70003783	1	Element, Air Cleaner	
53	1001165389	1	Hose	
54	1001166717	1	Bracket, Engine Mount	
55	1001166718	4	Isolator, Engine Mount	
56	1001167111	1	Harness Engine - Deutz D2011 (See ELECTRICAL SECTION for Breakdown)	
57	1001167520	1	Tray, Engine	
58	1001168018	4	Washer, Snubbing	
59	1001168059	1	Plate, Radiator Mounting	
60	1001235455	1	Engine, Deutz D2011 (Stage V) (See ENGINE COMPONENTS - DEUTZ D2011 ENGINE (STAGE V) for Breakdown)	
61	4923451	1	Harness, Glow Plugs	
62	0760614	3	Bolt M6 x 30	
63	8406109	1	Clip	
64	1001178859	1	Cable, Alternator	
65	1001214975	1	Bracket	

FIGURE 3-10. ENGINE COMPONENTS - DEUTZ D2011 (STAGE V)

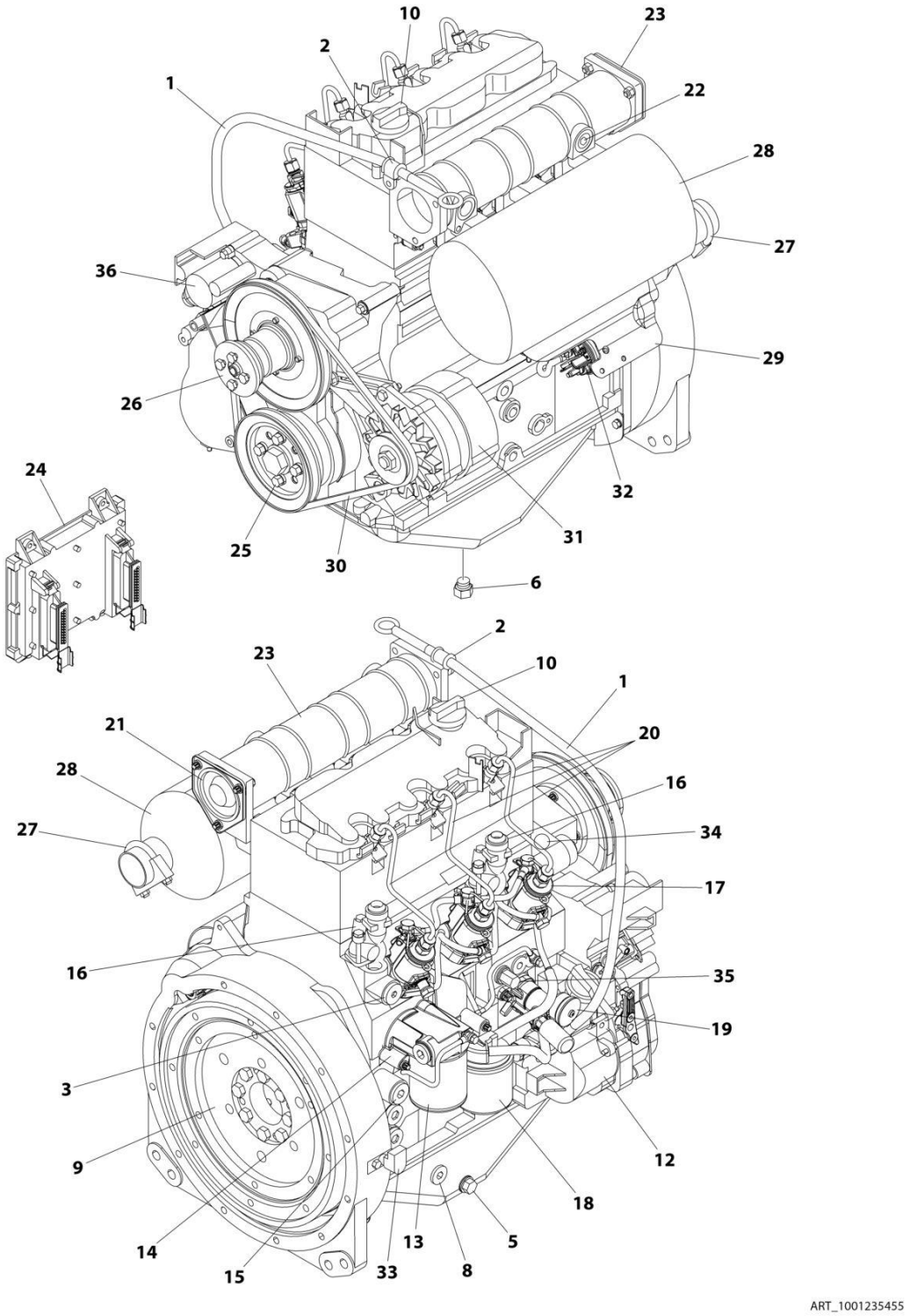

FIGURE 3-10. ENGINE COMPONENTS - DEUTZ D2011 (STAGE V)

ITEM	PART NUMBER	QTY	DESCRIPTION	REV
	1001235455	Ref	ENGINE COMPONENTS - DEUTZ D2011 (STAGE V) ENGINE	B
1	70001002	1	Tube, Dipstick	
1	7020403	1	Seal, Tube	
1	7020026	1	Dipstick	
2	70001654	1	Clamp	
2	70001655	1	Bolt	
3	70003475	1	Thermostat	
3	7020460	1	Spring	
4		Ref	Seal and Gasket Options (Not Shown):	
4	70002718	1	Seal, Rear Main	
4	7020430	1	Gasket, Valve Cover	
4	70003479	1	Gasket, Head - 1 Notch	
4	70003480	1	Gasket, Head - 2 Notch	
4	70003481	1	Gasket, Head - 3 Notch	
5	70025088	1	Plug	
6	70025667	1	Plug	
7	70025123	22	Bolt, Torx (Oil Pan Bolts) (Not Shown)	
8	7020492	1	Seal	
8	70025084	1	Plug	
9	70001870	1	Flywheel	
9	7024579	1	Ring Gear (Part of Flywheel)	
9	70025139	8	Bolt	
10	7020465	1	Cap, Oil Fill	
11	70000800	1	Timing Belt/Idler Kit (Includes Timing Belt, Tensioner and Tensioner Bolt) (Not Shown)	
12	70001850	1	Pump, Lubricating	
12	7020468	1	Seal, Pump to Engine Block (Not Shown)	
13	7016331	1	Filter, Oil	
14	70003472	1	Bracket, Oil Filter (Includes Plug with Seal, Temperature Sensor, Control Valve and Compression Spring)	
14	7027236	1	Sender, Temperature	
14	70025082	1	Seal, Plug	
14	70025091	1	Plug	
14	70003473	1	Gasket, Bracket to Engine Block (Not Shown)	
15	70001181	1	Valve	
15	70025091	1	Plug	
15	70025082	1	Seal, Plug	
16	70004268	2	Connector, Radiator Neck	
16	70004269	2	Seal, Radiator Neck to Engine Block	
17	70000912	3	Pump, Fuel Injector - A Spec	
17	70000913	3	Pump, Fuel Injector - B Spec	
17	70000914	3	Pump, Fuel Injector - C Spec	
17	70000915	3	Pump, Fuel Injector - D Spec	
17	70003464	3	O-Ring, Pump to Engine Block	
18	7020023	1	Filter, Fuel	
18	70003463	1	Filter, Fuel - RME Resistant	
18	70001423	1	Bracket, Fuel Filter	
19	70000916	1	Pump Fuel Supply	
19	70000917	1	O-Seal Between Fuel Pump and Engine Block	
19	70000918	1	Sealing Ring Between Hand Pump and Supply Pump	

SECTION 3 - ENGINE

ITEM	PART NUMBER	QTY	DESCRIPTION	REV
19	70000919	1	Pump, Hand	
19	70001435	1	Repair Kit	
19	70025694	2	Bolt, Torx	
20	70000931	3	Pipe, High Pressure	
21	70003469	1	Flange, Intake	
21	70003468	1	Seal	
22	70025084	1	Plug	
22	7020492	1	Seal, Plug	
23	7027903	1	Manifold, Air Intake	
23	70001871	3	Gasket Between Manifold and Engine Block	
24	7027795	1	Module, Engine Control	
24	7027796	1	Cable, Electrical Between Module and Engine Harness (Not Shown)	
24	70001872	1	Harness, Engine (Connects to p/n 70004060) (Not Shown)	
24	70004060	1	Plug, Connector Located on Cable Near Module (Not Shown)	
24	70004059	1	Plug, Analyzer (Not Shown)	
25	70025123	4	Bolt, Torx	
26	70000787	1	Support, Fan (Includes Support, Internal Shaft, Bearings and Circlip)	
27	70001844	1	Clamp	
28	See Note	1	Muffler (Note: See ENGINE ASSEMBLY)	
28	7020471	3	Gasket, Exhaust Between Muffler and Engine Block	
28	70004270	6	Stud, Muffler	
29	70001498	1	Shield, Starter	
29	70025693	3	Bolt	
30	70004102	1	V-Belt	
31	70004056	1	Alternator (Includes Voltage Regulator and Gaskets, Fan and Fan Mounting Hardware)	
31	70001868	1	Regulator, Voltage	
31	70001866	1	Gasket Set, Voltage Regulator	
31	70025131	1	Fan	
31	70025086	1	Nut, Fan	
31	70000851	1	Bracket, Alternator Mounting	
31	70002234	1	Bracket, Alternator Adjustment	
31	70004103	1	Harness, Alternator (Not Shown)	
32	7020479	1	Starter	
32	70025121	2	Bolt, Starter Mounting	
32	70004058	1	Relay	
32	70004062	1	Harness, Starter (Not Shown)	
33	7024565	1	Sensor, Speed	
33	70003931	1	Bolt	
33	70003932	1	Spacer, Sleeve	
34	7027791	1	Sender, Temperature	
35	7027790	1	Sensor, Oil Pressure	
36	7027792	1	Actuator	
37	70000345	3	Plug, Glow (Not Shown)	

FIGURE 3-11. ENGINE COMPONENTS - DEUTZ D2011

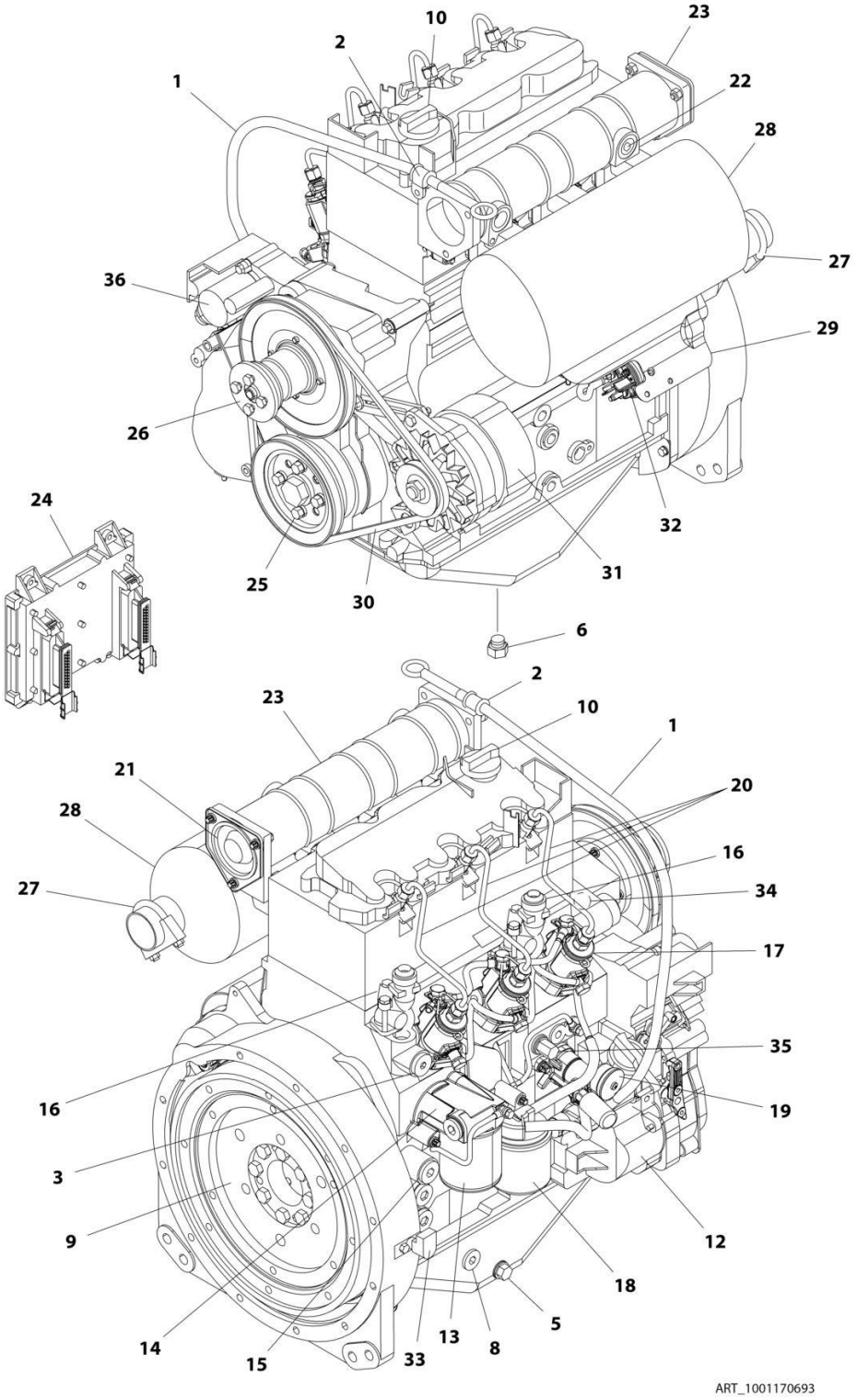

FIGURE 3-11. ENGINE COMPONENTS - DEUTZ D2011

ITEM	PART NUMBER	QTY	DESCRIPTION	REV
	1001170693	Ref	ENGINE COMPONENTS - DEUTZ D2011	C
1	70001002	1	Tube, Dipstick	
1	7020403	1	Seal, Tube	
1	7020026	1	Dipstick	
2	70001654	1	Clamp	
2	70001655	1	Bolt	
3	70003475	1	Thermostat	
3	7020460	1	Spring	
4		Ref	Seal and Gasket Options (Not Shown):	
4	70002718	1	Seal, Rear Main	
4	7020430	1	Gasket, Valve Cover	
4	70003479	1	Gasket, Head - 1 Notch	
4	70003480	1	Gasket, Head - 2 Notch	
4	70003481	1	Gasket, Head - 3 Notch	
5	70025088	1	Plug	
6	70025667	1	Plug	
7	70025123	22	Bolt, Torx (Oil Pan Bolts) (Not Shown)	
8	7020492	1	Seal	
8	70025084	1	Plug	
9	70001870	1	Flywheel	
9	7024579	1	Ring Gear (Part of Flywheel)	
9	70025139	8	Bolt	
10	7020465	1	Cap, Oil Fill	
11	70000800	1	Timing Belt/Idler Kit (Includes Timing Belt, Tensioner and Tensioner Bolt) (Not Shown)	
12	70001850	1	Pump, Lubricating	
12	7020468	1	Seal, Pump to Engine Block (Not Shown)	
13	7016331	1	Filter, Oil	
14	70003472	1	Bracket, Oil Filter (Includes Plug with Seal, Temperature Sensor, Control Valve and Compression Spring)	
14	7027236	1	Sender, Temperature	
14	70025082	1	Seal, Plug	
14	70025091	1	Plug	
14	70003473	1	Gasket, Bracket to Engine Block (Not Shown)	
15	70001181	1	Valve	
15	70025091	1	Plug	
15	70025082	1	Seal, Plug	
16	70004268	2	Connector, Radiator Neck	
16	70004269	2	Seal, Radiator Neck to Engine Block	
17	70000912	3	Pump, Fuel Injector - A Spec	
17	70000913	3	Pump, Fuel Injector - B Spec	
17	70000914	3	Pump, Fuel Injector - C Spec	
17	70000915	3	Pump, Fuel Injector - D Spec	
17	70003464	3	O-Ring, Pump to Engine Block	
18	7020023	1	Filter, Fuel	
18	70003463	1	Filter, Fuel - RME Resistant	
18	70001423	1	Bracket, Fuel Filter	
19	70000916	1	Pump Fuel Supply	
19	70000917	1	O-Seal Between Fuel Pump and Engine Block	
19	70000918	1	Sealing Ring Between Hand Pump and Supply Pump	

ITEM	PART NUMBER	QTY	DESCRIPTION	REV
19	70000919	1	Pump, Hand	
19	70001435	1	Repair Kit	
19	70025694	2	Bolt, Torx	
20	70000931	3	Pipe, High Pressure	
21	70003469	1	Flange, Intake	
21	70003468	1	Seal	
22	70025084	1	Plug	
22	7020492	1	Seal, Plug	
23	7027903	1	Manifold, Air Intake	
23	70001871	3	Gasket Between Manifold and Engine Block	
24	See Note	1	Module, Engine Control (Note: Not Currently Available)	
24	7027796	1	Cable, Electrical Between Module and Engine Harness (Not Shown)	
24	70001872	1	Harness, Engine (Connects to p/n 70004060) (Not Shown)	
24	70004060	1	Plug, Connector Located on Cable Near Module (Not Shown)	
24	70004059	1	Plug, Analyzer (Not Shown)	
25	70025123	4	Bolt, Torx	
26	70000787	1	Support, Fan (Includes Support, Internal Shaft, Bearings and Circlip)	
27	70001844	1	Clamp	
28	See Note	1	Muffler (Note: See ENGINE ASSEMBLY for Breakdown)	
28	7020471	3	Gasket, Exhaust Between Muffler and Engine Block	
28	70004270	6	Stud, Muffler	
29	70001498	1	Shield, Starter	
29	70025693	3	Bolt	
30	70004102	1	V-Belt	
31	70004056	1	Alternator (Includes Voltage Regulator and Gaskets, Fan and Fan Mounting Hardware)	
31	70001868	1	Regulator, Voltage	
31	70001866	1	Gasket Set, Voltage Regulator	
31	70025131	1	Fan	
31	70025086	1	Nut, Fan	
31	70000851	1	Bracket, Alternator Mounting	
31	70002234	1	Bracket, Alternator Adjustment	
31	70004103	1	Harness, Alternator (Not Shown)	
32	7020479	1	Starter	
32	70025121	2	Bolt, Starter Mounting	
32	70004058	1	Relay	
32	70004062	1	Harness, Starter (Not Shown)	
33	7024565	1	Sensor, Speed	
33	70003931	1	Bolt	
33	70003932	1	Spacer, Sleeve	
34	7027791	1	Sender, Temperature	
35	7027790	1	Sensor, Oil Pressure	
36	7027792	1	Actuator	
37	70000345	3	Plug, Glow (Not Shown)	

FIGURE 3-12. ENGINE INSTALLATION - DEUTZ D2.9L4 ENGINE (WITHOUT ARCTIC PACKAGE) (ANSI, CSA AND ANSI EXPORT SPECS)

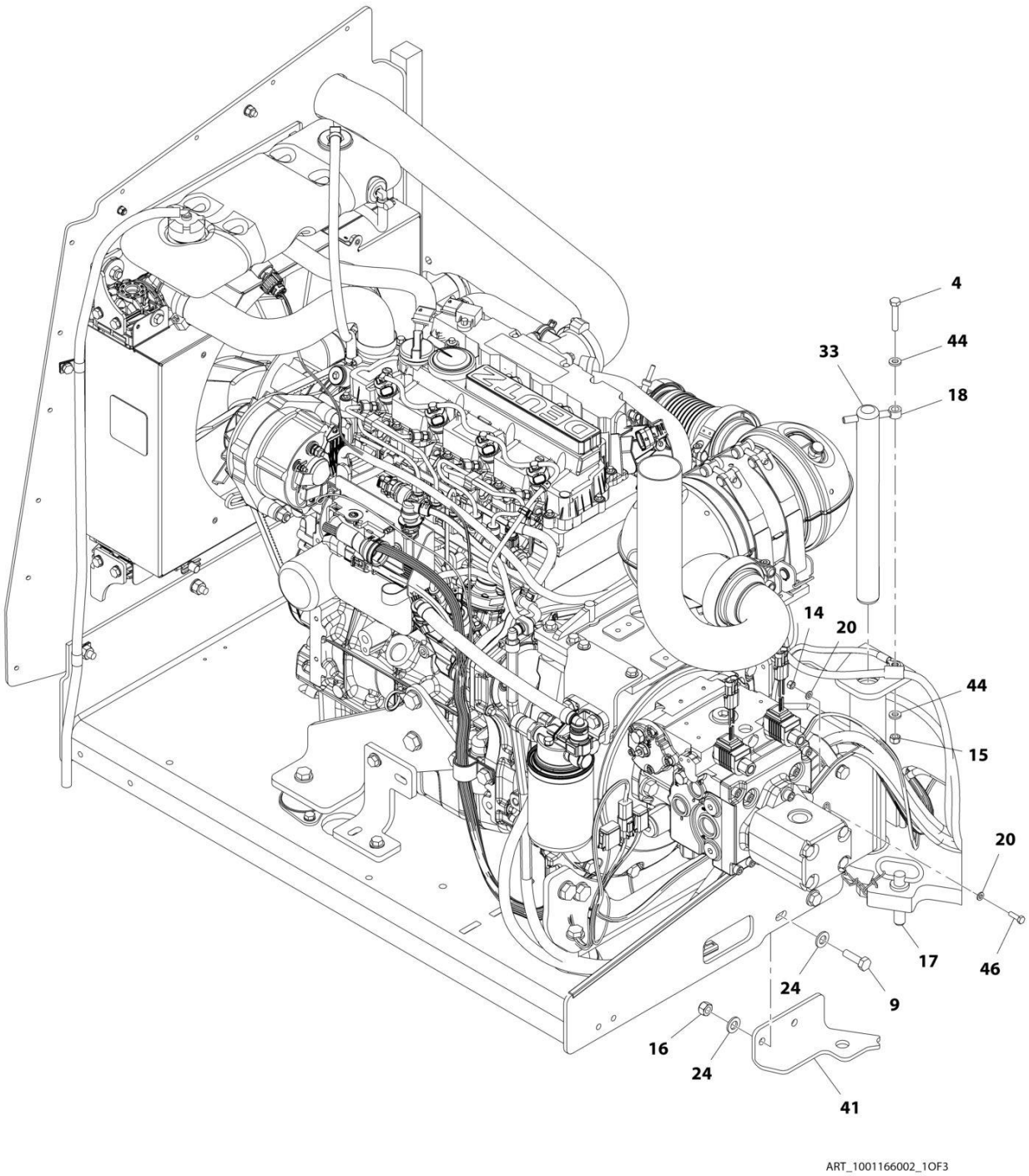

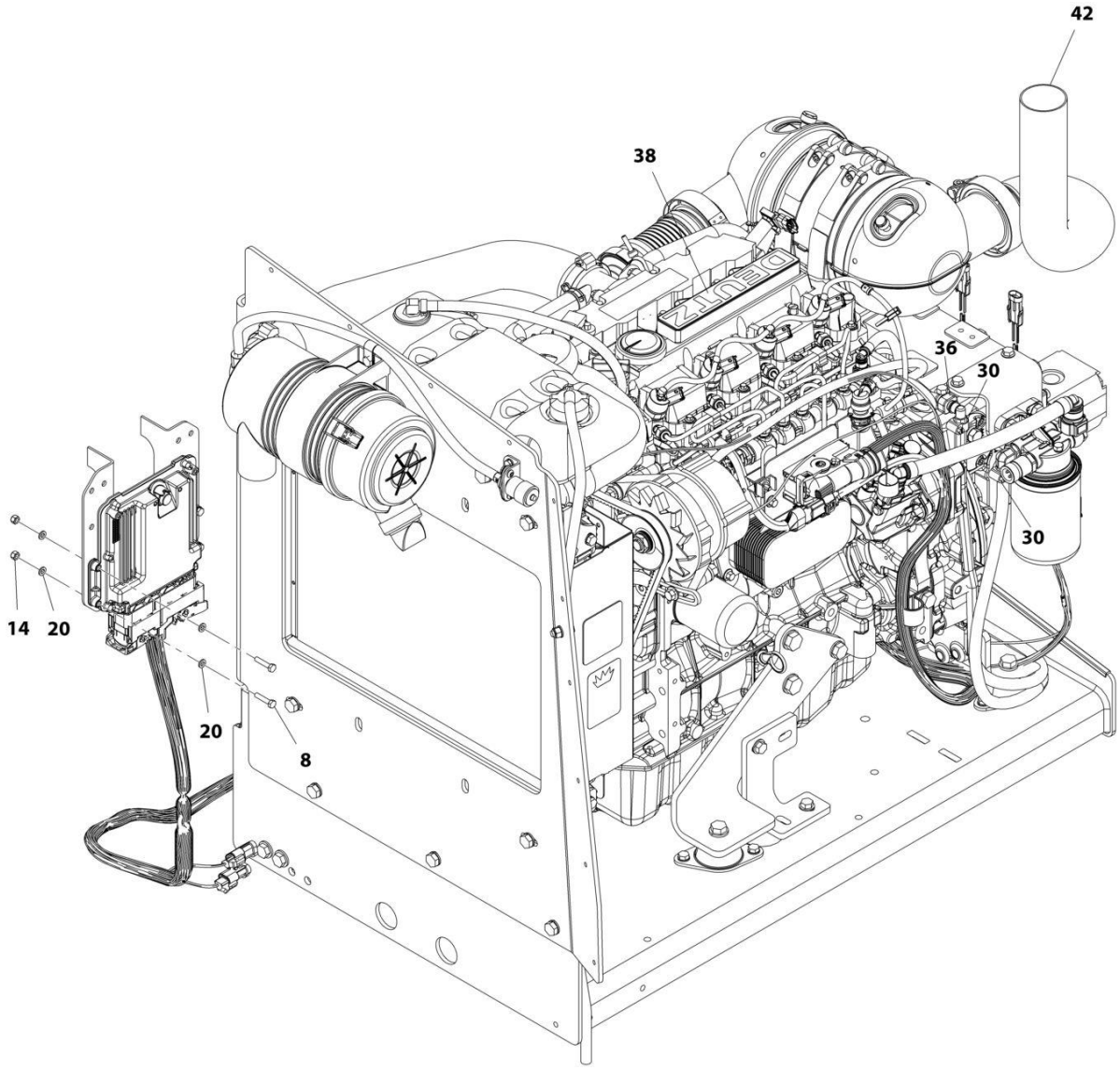

ART_1001166002_2OF3

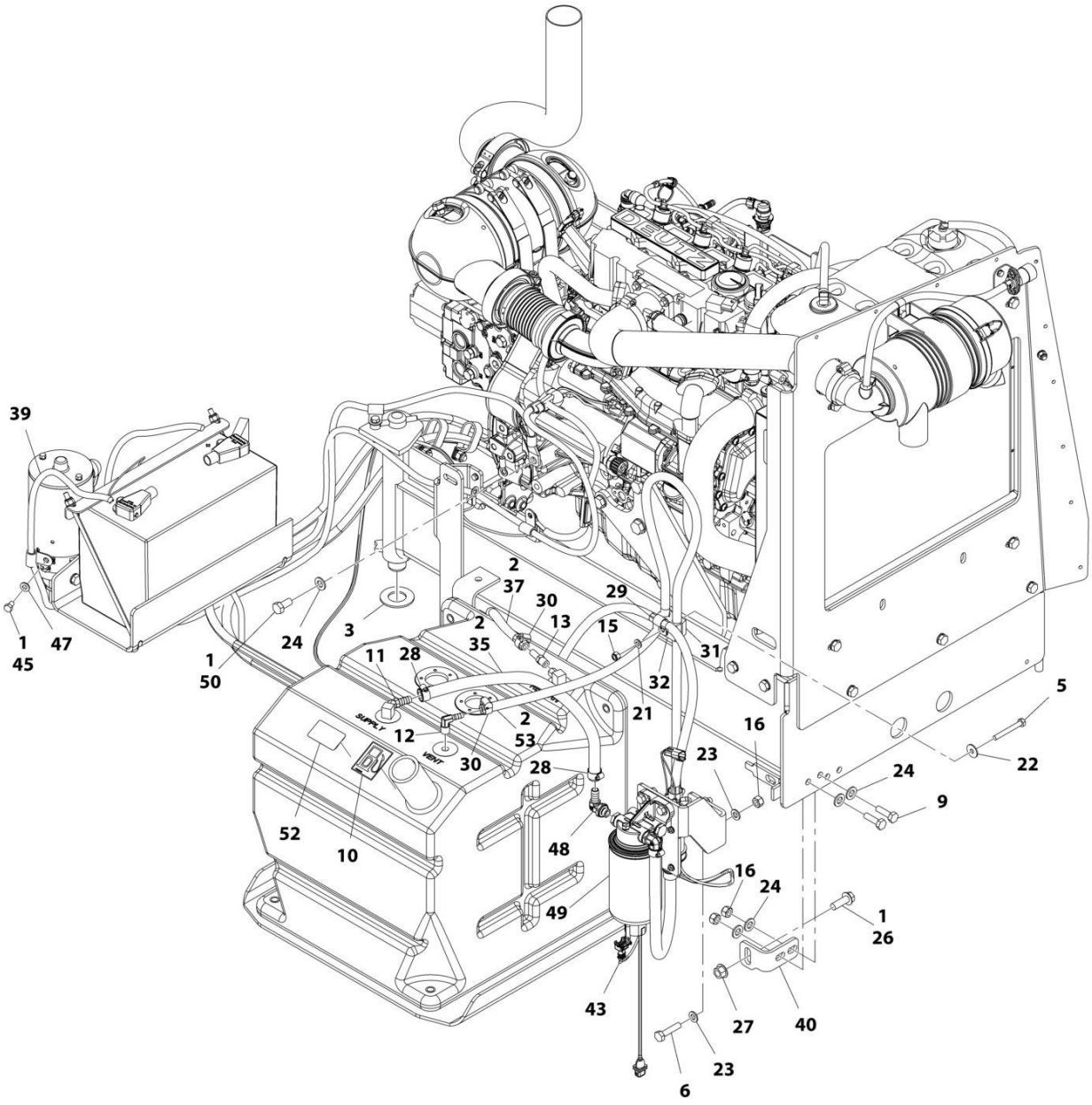

ART_1001166002_3OF3

FIGURE 3-12. ENGINE INSTALLATION - DEUTZ D2.9L4 ENGINE (WITHOUT ARCTIC PACKAGE) (ANSI, CSA AND ANSI EXPORT SPECS)

ITEM	PART NUMBER	QTY	DESCRIPTION	REV
	1001166002	Ref	ENGINE INSTALLATION - DEUTZ D2.9L4 ENGINE (WITHOUT ARCTIC PACKAGE) (ANSI, CSA AND ANSI EXPORT SPECS)	I
1	0100011	AR	Compound, Locking	
2	0100020	AR	Sealant, Pipe	
3	0440162	1	Bearing	
4	0700817	1	Bolt M8 x 45	
5	0700821	1	Bolt M8 x 65	
6	0701017	2	Bolt M10 x 45	
8	0760613	4	Bolt M6 x 28	
9	0761015	4	Bolt M10 x 35	
10	1701505	2	Decal - Diesel Fuel	
11	2180832	1	Fitting, Barbed	
12	2220313	1	Fitting, Barbed 90	
13	2220767	1	Fitting, Barbed	
14	3290605	5	Nut, Lock M6 x 1	
15	3290805	2	Bolt, M8 x 1.25	
16	3291005	6	Nut, Lock M10 x 1.5	
17	3422532	1	Pin	
18	3841143	1	Keeper, Pin	
19	4240099	AR	Tie-Strap	
20	4811700	10	Washer, M6	
21	4811900	1	Washer, M8	
22	4811902	1	Washer, M8	
23	4812000	4	Washer, M10	
24	4812100	9	Washer, M12	
26	5251215	1	Bolt M12 x 35	
27	5261200	1	Nut, Flange M12	
28	8405006	3	Clamp	
29	8406101	1	Clip	
30	8410013	4	Clamp	
31	8750014	1	Clamp	
32	8750031	1	Clamp	
33	1001135196	1	Pin	
35	1001154405	27.56 in /70cm	Hose	
36	1001155823	1	Coupling, Quick Disconnect 90	
37	1001165035	26 ft /7.93m	Hose **(SN 0300203771 through 0300218460)**	
37	1001165035	21 ft /6.42m	Hose **(SN 0300218461 through 0300272360, Except SN 0300272174 through 0300272184)**	
38	1001166001	1	Engine and Pump Sub-Assembly - Deutz D2.9L4 (Without Arctic Package) (ANSI, CSA AND ANSI Export Specs) (See ENGINE AND PUMP SUB-ASSEMBLY - DEUTZ D2.9L4 (WITHOUT ARCTIC PACKAGE) (ANSI, CSA AND ANSI EXPORT SPECS) for Breakdown)	
39	1001166970	1	Battery and Auxiliary Power Pump Cable Kit	
39	70009006	1	Cable, Battery (Black) (Battery to Ground)	
39	70009002	1	Cable, Battery (Red) (Auxiliary Power Relay to Auxiliary Power Pump)	
39	70009007	1	Cable, Battery (Red) (Battery to Auxiliary Power Relay)	
40	1001167512	1	Bracket, Engine Tray	

ITEM	PART NUMBER	QTY	DESCRIPTION	REV
41	1001169823	1	Plate, Engine Lock	
42	1001172594	1	Pipe, Exhaust	
43	1001173342	1	Harness, Fuel Pump (See ELECTRICAL SECTION for Breakdown)	
44	5240800	2	Washer, M8 Hardened	
45	0641504	1	Bolt 5/16 x 1/2	
46	0760610	1	Bolt M6 x 20	
47	4711500	1	Washer, 5/16	
48	1001142501	1	Fitting, Barbed 90	
49	1001162335	1	Bracket Assembly - Fuel Pump/Filter (See BRACKET ASSEMBLY - FUEL PUMP AND FILTER (DEUTZ D2.9L4 ENGINE) for Breakdown)	
50	0771212	1	Bolt M12 x 25	
52	1001125387	1	Decal - Ultra Low Sulfur Fuel	
53	2750532	5.54 ft /1.69m	Hose **(SN 0300218461 through 0300272360, Except SN 0300272174 through 0300272184)**	

FIGURE 3-13. ENGINE AND PUMP SUB-ASSEMBLY - DEUTZ D2.9L4 (WITHOUT ARCTIC PACKAGE) (ANSI, CSA AND ANSI EXPORT SPECS)

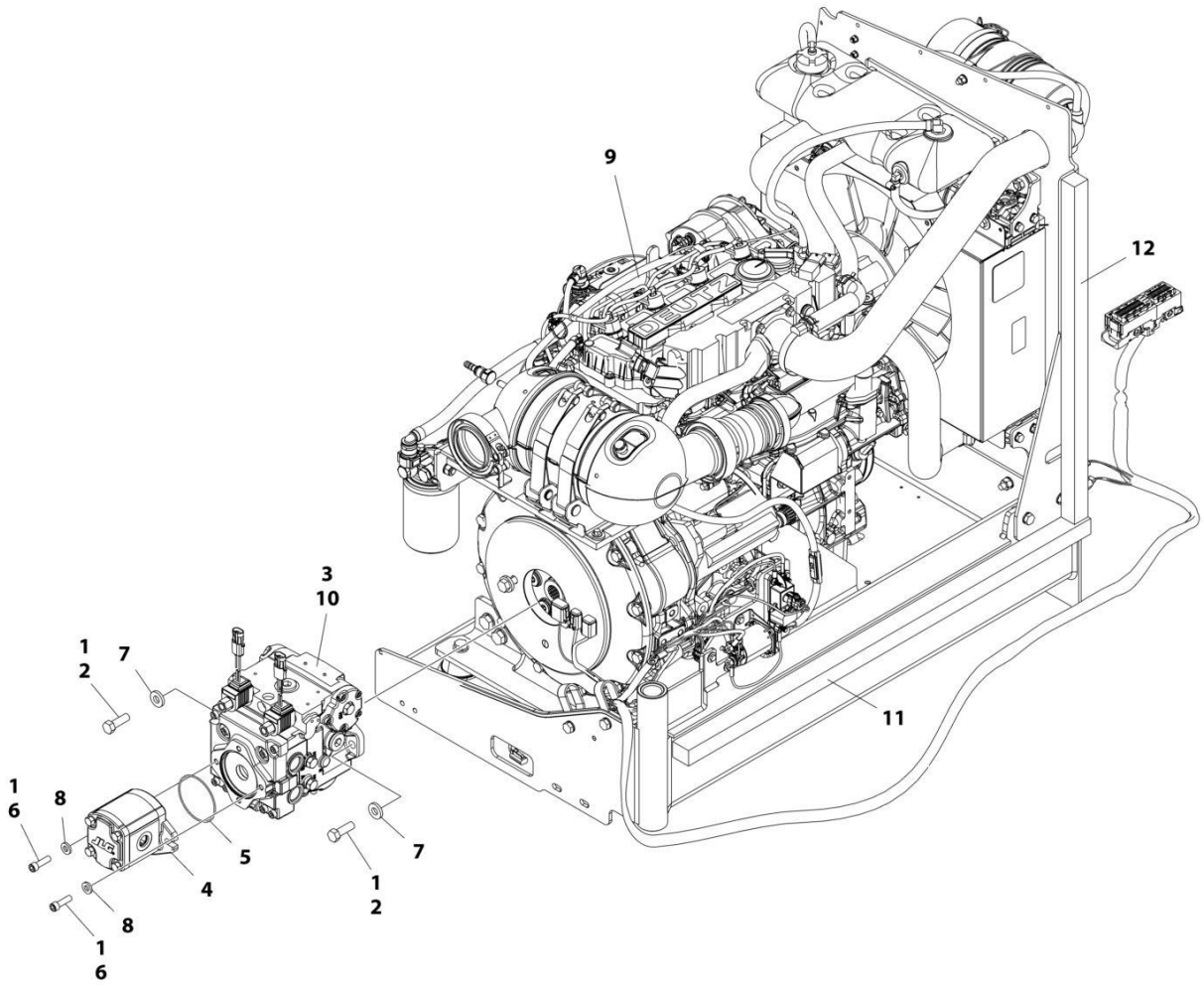

FIGURE 3-13. ENGINE AND PUMP SUB-ASSEMBLY - DEUTZ D2.9L4 (WITHOUT ARCTIC PACKAGE) (ANSI, CSA AND ANSI EXPORT SPECS)

ITEM	PART NUMBER	QTY	DESCRIPTION	REV
	1001166001	Ref	ENGINE AND PUMP SUB-ASSEMBLY - DEUTZ D2.9L4 (WITHOUT ARCTIC PACKAGE) (ANSI, CSA AND ANSI EXPORT SPECS)	G
1	0100011	AR	Compound, Locking	
2	0641812	2	Bolt, 1/2 x 1-1/2	
3	3020037	AR	Lube	
4	3600242	1	Gear Pump Assembly (See GEAR PUMP ASSEMBLY for Breakdown) **(SN 0300203771 through 0300233151)**	
4	1001214207	1	Gear Pump Assembly **(SN 0300233152 through 0300272360, Except SN 0300272174 through 0300272184)**	
4	70006356	1	Seal Kit	
5	3790152	1	O-Ring	
6	3931620	AR	Capscrew, 3/8 x 1-1/4	
6	3931618	AR	Capscrew, 3/8 x 1 1/8	
7	4891800	2	Washer 1/2 Hardened	
8	4891600	2	Washer, 3/8 Hardened	
9	1001166000	1	Engine Assembly - Deutz D2.9L4 Engine (Without Arctic Package) (ANSI, CSA and ANSI Export Specs) (See ENGINE ASSEMBLY - DEUTZ D2.9L4 ENGINE (WITHOUT ARCTIC PACKAGE) (ANSI, CSA AND ANSI EXPORT SPECS) for Breakdown)	
10	1001167036	1	Piston Pump Assembly (See PISTON PUMP ASSEMBLY for Breakdown)	
11	1001171953	1	Seal	
12	1001171954	1	Seal	

FIGURE 3-14. ENGINE ASSEMBLY - DEUTZ D2.9L4 ENGINE (WITHOUT ARCTIC PACKAGE) (ANSI, CSA AND ANSI EXPORT SPECS)

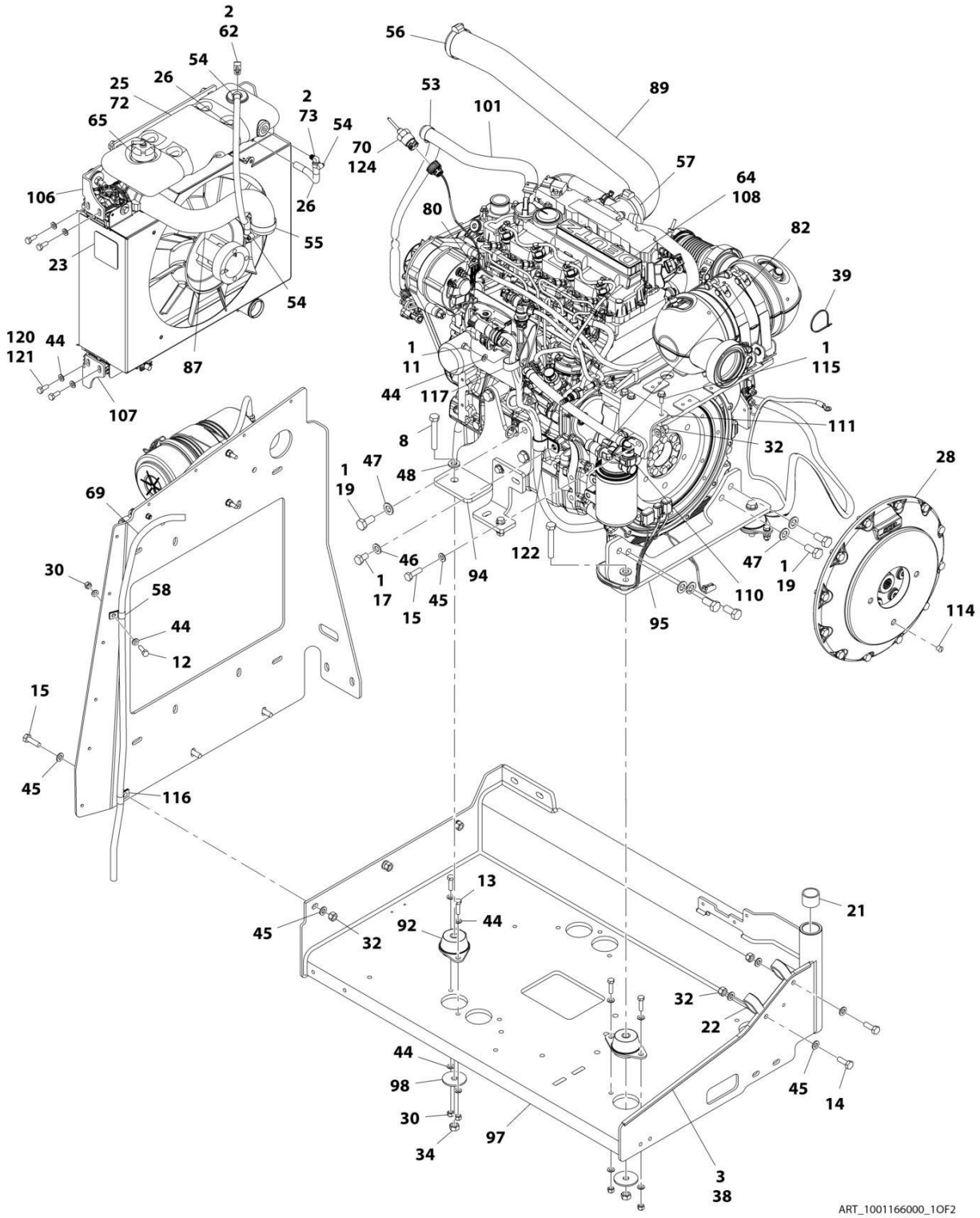

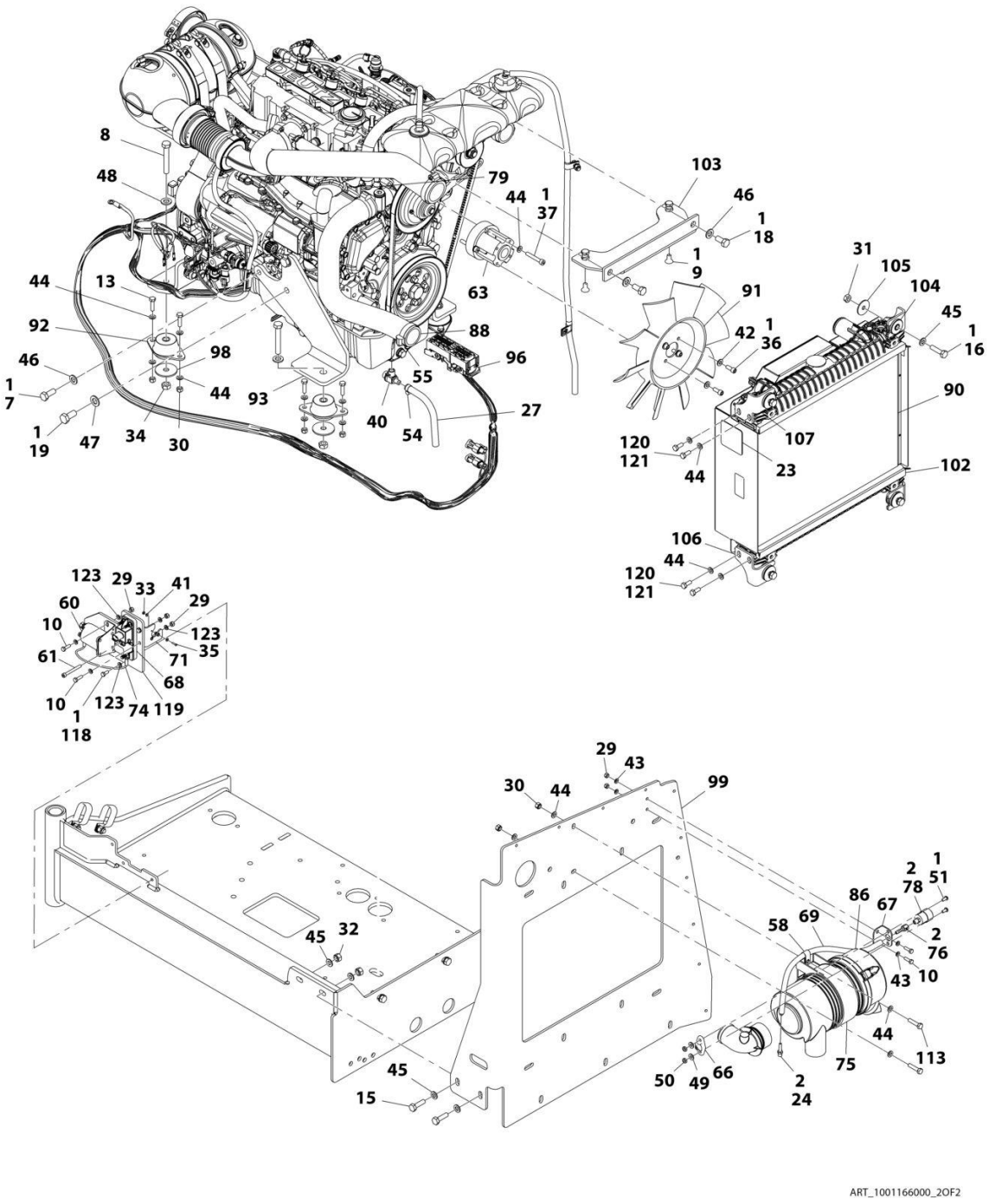
8
48
79
44
1
37
103
46
1
18
1
9
31
105
104
45
1
16
44
13
63
91
92
88
42
1
36
46
98
96
1
7
44
93
55
90
1
19
47
34
30
40
54
27
120
121
107
44
23
102
106
44
120
121
123
29
33
41
29
60
10
123
35
61
71
68
10
123
74
119
1
118
29
43
30
44
99
1
51
2
78
86
67
58
69
2
76
45
32
43
10
44
113
75
45
50
49
66
2
24
15
ART_1001166000_2OF2

FIGURE 3-14. ENGINE ASSEMBLY - DEUTZ D2.9L4 ENGINE (WITHOUT ARCTIC PACKAGE) (ANSI, CSA AND ANSI EXPORT SPECS)

ITEM	PART NUMBER	QTY	DESCRIPTION	REV
	1001166000	Ref	ENGINE ASSEMBLY - DEUTZ D2.9L4 ENGINE (WITHOUT ARCTIC PACKAGE) (ANSI, CSA AND ANSI EXPORT SPECS)	Q
1	0100011	AR	Compound, Locking	
2	0100020	AR	Sealant, Pipe	
3	0100081	AR	Adhesive	
7	0711214	AR	Bolt M12 x 30	
8	0711224	4	Bolt M12 x 80 Grade 10.9	
9	0741606	2	Screw 3/8 x .75	
10	0760610	6	Bolt M6 x 20	
11	0760808	1	Bolt M8 x 16	
12	0760812	1	Bolt M8 x 25	
13	0760814	8	Bolt M8 x 30	
14	0761014	2	Bolt M10 x 30	
15	0761015	7	Bolt M10 x 35	
16	0761016	4	Bolt M10 x 40	
17	0761210	1	Bolt M12 x 20	
18	0761212	2	Bolt M12 x 25	
19	0771414	AR	Bolt M14 x 30	
21	0961951	2	Bushing	
22	1321716	2	Clamp	
23	1703162	2	Decal - Caution Fan	
24	2220315	1	Fitting, Straight Barbed	
25	2300004	3 gal/ 11.3L	Coolant	
26	2720015	2 ft/ 0.61m	Hose	
27	2720340	8 in/ 20.3cm	Hose	
28	2902065	1	Pump Coupling Kit (See PUMP COUPLING KIT for Breakdown)	
29	3290605	7	Nut, Lock M6 x 1	
30	3290805	11	Nut, Lock M8 x 1.25	
31	3291001	4	Nut, M10 x 1.5	
32	3291005	9	Nut, Lock M10 x 1.5	
33	3310401	3	Nut, #4	
34	3331215	4	Nut, M12 x 1.75	
35	3910408	3	Screw 4 x 1/2	
36	3931512	4	Capscrew 5/16 x 3/4	
37	4031914	4	Bolt M8 x 50	
38	4060805	2.25 ft/ 0.69m	Trim, Flex Shield	
39	4240099	AR	Tie-Strap	
40	4640751	1	Valve, Oil Drain	
41	4710400	3	Washer, #4	
42	4711500	4	Washer, 5/16	
43	4811700	AR	Washer, M6	
44	4811900	35	Washer, M8	
45	4812000	22	Washer, M10	
46	4812100	AR	Washer, M12	
47	4812200	AR	Washer, M14	
48	5241200	4	Washer, M12 Hardened	

ITEM	PART NUMBER	QTY	DESCRIPTION	REV
49	8305401	2	Nut, Jam .250	
50	8307109	2	Washer, .250	
51	8310548	2	Screw, 1/4 x 1/2	
53	8405007	2	Clamp	
54	8405009	5	Clamp	
55	8405104	4	Clamp	
56	8405202	1	Clamp	
57	8405204	1	Clamp	
58	8406109	2	Clip	
60	1001117308	1	Relay, 200Amp	
60	3300220	2	Nut	
60	3321001	2	Nut, #10	
60	4761000	2	Washer, Lock #10	
60	1001111424	2	Washer	
61	1001118878	1	Bolt M6 x 55	
62	1001134488	1	Fitting, Barbed **(SN 0300203771 through 0300241775)**	
63	1001144116	1	Spacer, Fan	
64	1001136079	2.4 gal/9L	Oil Motor	
65	1001136834	1	Cap, Tank	
66	1001138173	1	Support, Service Indicator	
67	1001138175	1	Bracket, Service Indicator	
68	1001138228	1	Relay, Power Module	
68	70023592	1	Fuse 20Amp	
68	70023593	1	Fuse 30Amp	
69	1001138248	5.25 ft/ 1.6m	Tube	
70	1001138827	1	Sensor, Coolant Level **(SN 0300203771 through 0300241775)**	
71	1001139240	1	Bracket	
72	1001140535	NLA	Tank, Surge (Use p/n 1001230635) **(SN 0300203771 through 0300241775)**	
72	1001230635	1	Tank, Surge (Includes Items 62, 70, & 73) **(SN 0300241775 through 0300272360, Except SN 0300272174 through 0300272184)**	
73	1001140564	1	Fitting, Barbed 90 **(SN 0300203771 through 0300241775)**	
74	1001141304	1	Harness, Glow Plug	
75	1001141694	1	Clamp, Air Cleaner	
76	1001141995	1	Fitting, Barbed	
78	1001143390	1	Indicator	
79	1001143797	1	Fitting, Barbed	
80	1001178788	1	Cable, Alternator	
82	1001152489	1	Fitting, Barbed 90	
86	1001165388	1	Air Cleaner Assembly	
86	70003783	1	Element, Air Cleaner	
87	1001165405	1	Hose, Upper Radiator	
88	1001165406	1	Hose, Lower Radiator	
89	1001165721	1	Hose, Air Intake	
90	1001165722	1	Radiator	
91	1001165849	1	Fan	
92	1001166718	4	Mount, Motor	
93	1001166921	1	Plate, Engine Mount	
94	1001166922	1	Plate, Engine Mount	
95	1001166924	1	Plate, Engine Mount	

ITEM	PART NUMBER	QTY	DESCRIPTION	REV
96	1001167108	1	Harness Engine - Deutz D2.9L4 (See ELECTRICAL SECTION for Breakdown)	
97	1001167520	1	Tray, Engine	
98	1001168018	4	Washer, Special	
99	1001168026	1	Plate, Radiator Mounting	
101	1001168099	1	Hose	
102	1001168166	2	Seal	
103	1001168950	1	Bracket	
104	1001169054	4	Isolator	
105	1001169138	4	Washer, Snubbing	
106	1001169967	2	Bracket	
107	1001170035	2	Bracket	
108	1001170617	1	Engine, Deutz D2.9L4 (See ENGINE COMPONENTS - DEUTZ D2.9L4 ENGINE for Breakdown)	
110	1001177359	1	Hose	
111	1001178876	1	Mount, Fuel Filter	
113	0760815	2	Bolt M8 x 35	
114	3520054	1	Plug	
115	5250810	2	Bolt M8 x 20	
116	8406110	1	Clip	
117	8406201	1	Clip	
118	0760607	3	Bolt M6 x 14	
119	1001179903	1	Bracket	
120	1001180620	AR	Adhesive	
121	0760810	8	Bolt M8 x 20	
122	1001191620	1	Clamp	
123	4811702	AR	Washer M6	
124	1001182997	AR	Adhesive	

FIGURE 3-15. ENGINE INSTALLATION - DEUTZ D2.9L4 ENGINE (WITH ARCTIC PACKAGE) (ANSI AND CSA SPECS)

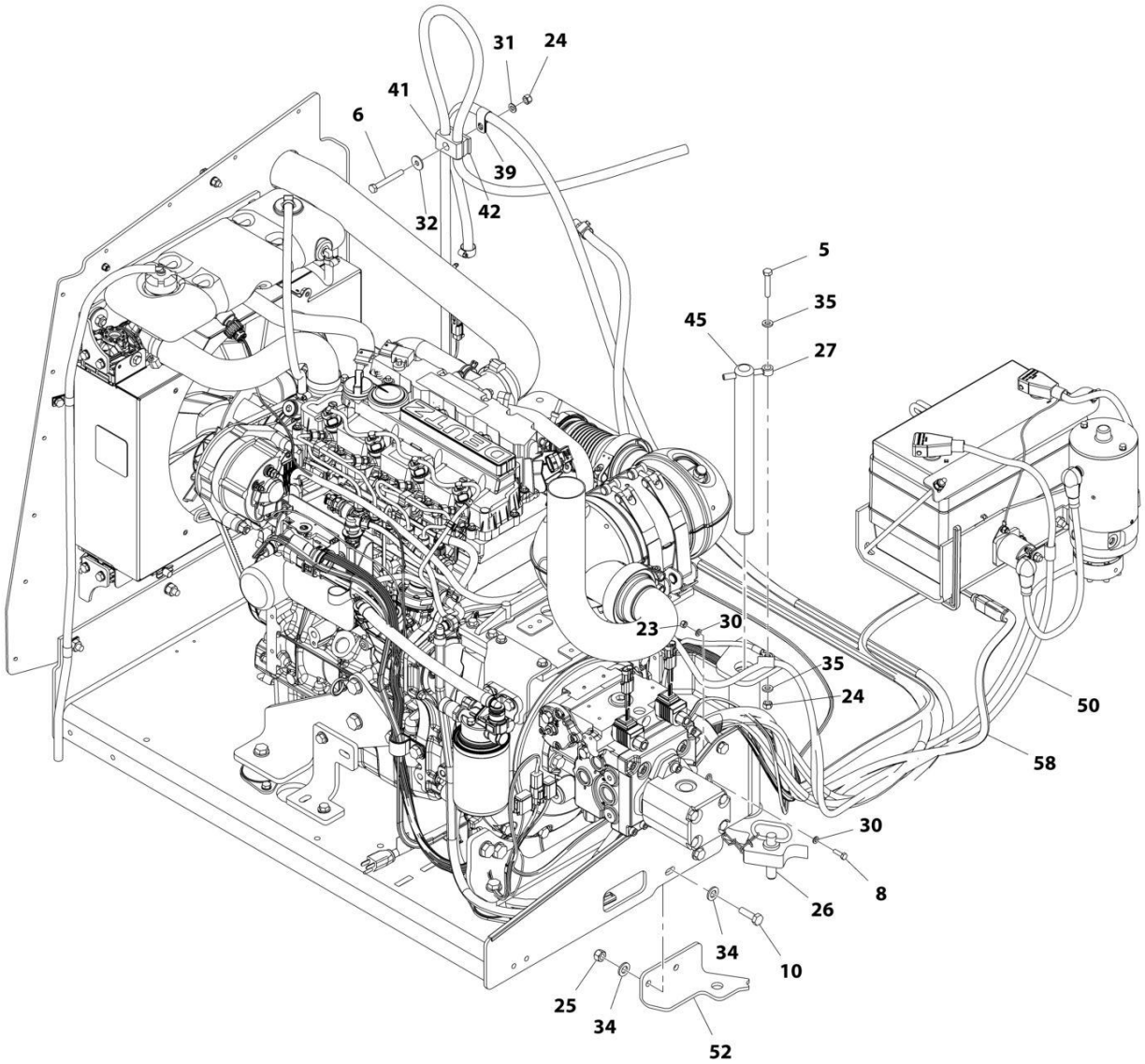

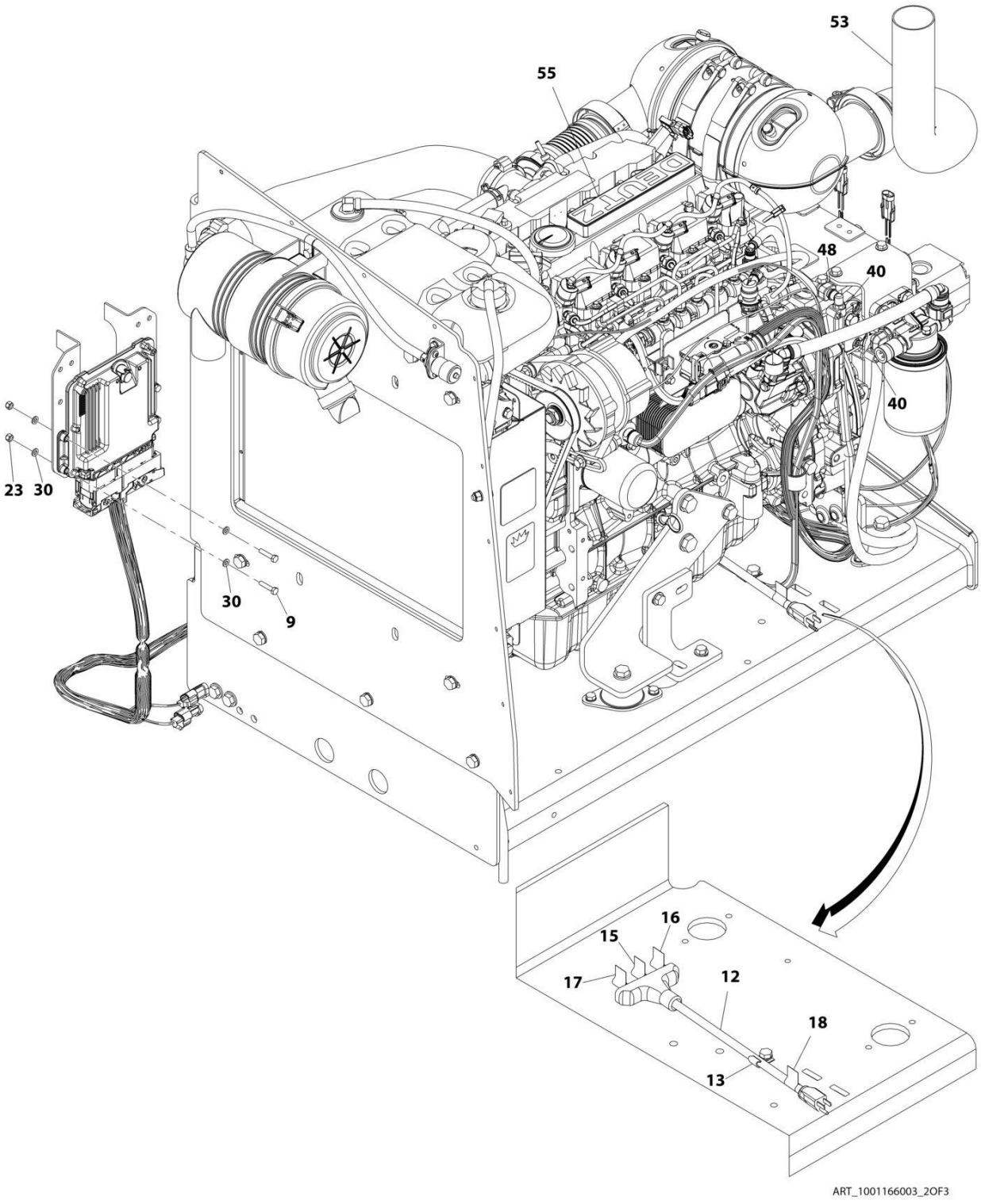
53
55
48
40
40
23
30
30
9
16
15
17
12
18
13
ART_1001166003_2OF3

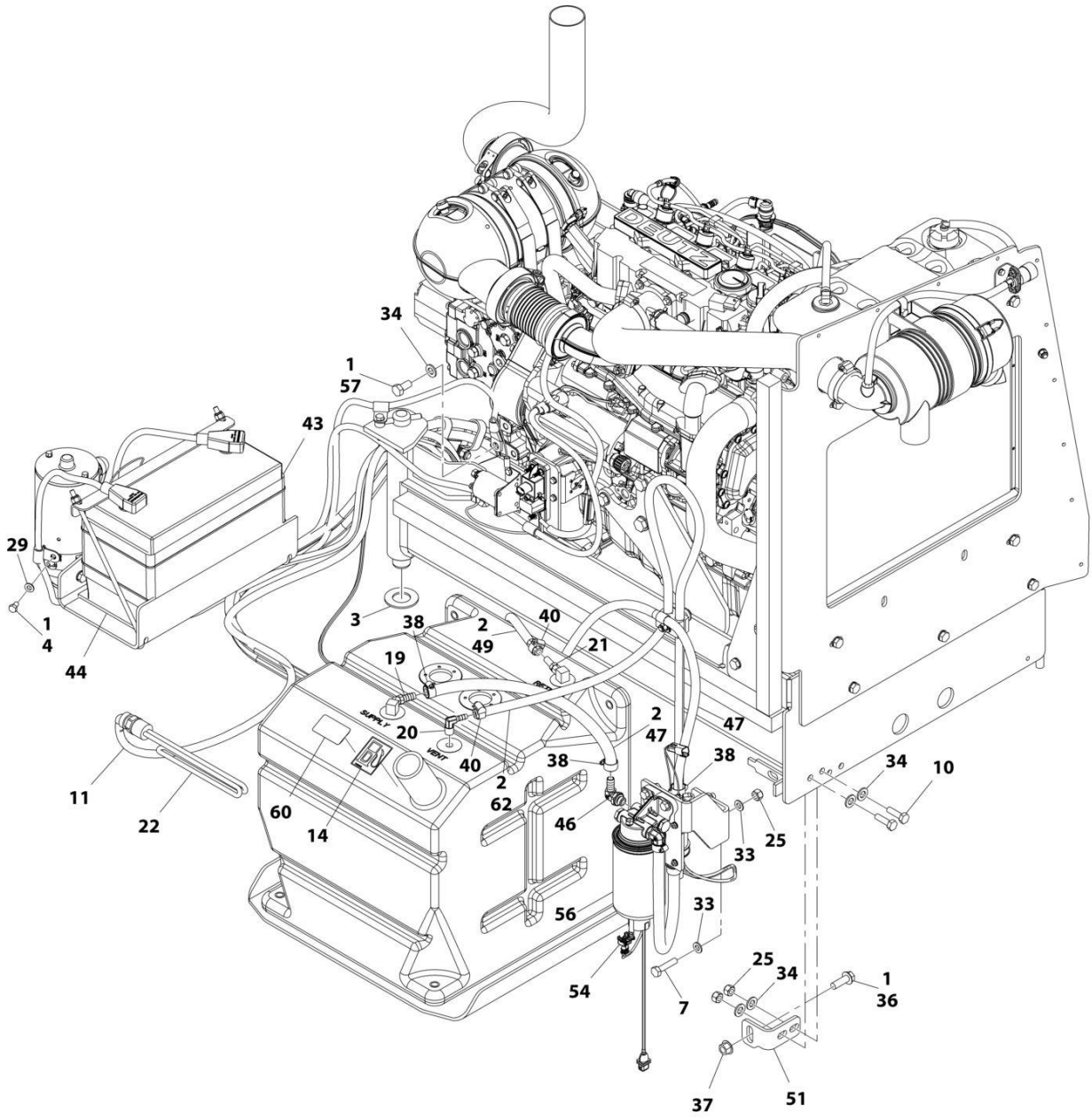
34
1
57
43
29
1
4
44
3
38
2
49
40
21
19
SUPPLY
VENT
20
40
2
62
2
47
47
38
38
34
10
11
22
60
14
46
25
33
33
56
54
7
25
34
1
36
37
51
ART_1001166003_3OF3

FIGURE 3-15. ENGINE INSTALLATION - DEUTZ D2.9L4 ENGINE (WITH ARCTIC PACKAGE) (ANSI AND CSA SPECS)

ITEM	PART NUMBER	QTY	DESCRIPTION	REV
	1001166003	Ref	ENGINE INSTALLATION - DEUTZ D2.9L4 ENGINE (WITH ARCTIC PACKAGE) (ANSI AND CSA SPECS)	J
1	0100011	AR	Compound, Locking	
2	0100020	AR	Sealant, Pipe	
3	0440162	1	Bearing	
4	0641504	1	Bolt 5/16 x 1/2	
5	0700817	1	Bolt M8 x 45	
6	0700821	1	Bolt M8 x 65	
7	0701017	2	Bolt M10 x 45	
8	0760610	1	Bolt M6 x 20	
9	0760613	4	Bolt M6 x 28	
10	0761015	5	Bolt M10 x 35	
11	1060625	1	Cable, Immersion Heater **(SN 0300203771 through 0300208326)**	
12	1060626	1	Plug, 3 Way	
13	1320223	1	Clamp	
14	1701505	2	Decal - Diesel Fuel	
15	1702941	1	Decal - Battery Heater	
16	1702942	1	Decal - Engine Block Heater	
17	1702943	1	Decal - Hydraulic Tank Heater	
18	1702944	1	Decal - Heater Cord	
19	2180832	1	Fitting, Barbed	
20	2220313	1	Fitting, Barbed 90	
21	2220767	1	Fitting, Barbed	
22	2580050	1	Heater, Hydraulic Tank **(SN 0300203771 through 0300208326)**	
22	1001188972	1	Heater, Hydraulic Tank **(SN 0300208327 through 0300272360, Except SN 0300272174 through 0300272184)**	
23	3290605	5	Nut, Lock M6 x 1	
24	3290805	2	Nut, Lock M8 x 1.25	
25	3291005	7	Nut, Lock M10 x 1.5	
26	3422532	1	Pin	
27	3841143	1	Keeper, Pin	
28	4240099	AR	Tie-Strap	
29	4711500	1	Washer, 5/16	
30	4811700	10	Washer, M6	
31	4811900	1	Washer, M8	
32	4811902	1	Washer, M8	
33	4812000	6	Washer, M10	
34	4812100	9	Washer, M12	
35	5240800	2	Washer, M8 Hardened	
36	5251215	1	Bolt M12 x 35	
37	5261200	1	Nut, Flange M12 Class10	
38	8405006	3	Clamp	
39	8406101	1	Clip	
40	8410013	4	Clamp	
41	8750014	1	Clamp **(SN 0300203771 through 0300243704)**	
41	1320187	1	Clamp **(SN 0300243704 through 0300272360, Except SN 0300272174 through 0300272184)**	
42	8750031	1	Clamp **(SN 0300203771 through 0300243704)**	
42	1320190	1	Clamp **(SN 0300243704 through 0300272360, Except SN 0300272174 through 0300272184)**	

ITEM	PART NUMBER	QTY	DESCRIPTION	REV
43	1001097000	1	Heater, Battery **(SN 0300203771 through 0300208326)**	
43	2580024	1	Heater, Battery **(SN 0300208327 through 0300272360, Except SN 0300272174 through 0300272184)**	
44	1001119278	1	Insulate	
45	1001135196	1	Pin	
46	1001142501	1	Fitting, Barbed 90	
47	1001154405	28 in/.7m	Hose	
48	1001155823	1	Coupling, Quick Disconnect 90	
49	1001165035	26 ft /7.93m	Hose **(SN 0300203771 through 0300218460)**	
49	1001165035	21 ft /6.42m	Hose **(SN 0300218461 through 0300272360, Except SN 0300272174 through 0300272184)**	
50	1001166970	1	Battery and Auxiliary Power Pump Cable Kit	
50	70009006	1	Cable, Battery (Black) (Battery to Ground)	
50	70009002	1	Cable, Battery (Red) (Auxiliary Power Relay to Auxiliary Power Pump)	
50	70009007	1	Cable, Battery (Red) (Battery to Auxiliary Power Relay)	
51	1001167512	1	Bracket, Engine Tray	
52	1001169823	1	Plate, Engine Lock	
53	1001172594	1	Pipe, Exhaust	
54	1001173342	1	Harness, Fuel Pump (See ELECTRICAL SECTION for Breakdown)	
55	1001174778	1	Engine and Pump Sub-Assembly - Deutz D2.9L4 (With Arctic Package) (ANSI and CSA Specs) (See ENGINE AND PUMP SUB-ASSEMBLY - DEUTZ D2.9L4 (WITH ARCTIC PACKAGE) (ANSI AND CSA SPECS) for Breakdown)	
56	1001162335	1	Bracket Assembly - Fuel Pump/Filter (See BRACKET ASSEMBLY - FUEL PUMP AND FILTER (DEUTZ D2.9L4 ENGINE) for Breakdown)	
57	0771212	1	Bolt M12 x 25	
58	1001150918	1	Cable, Extension Cord	
60	1001125387	1	Decal - Ultra Low Sulfur Fuel	
62	2750532	5.54 ft /1.69m	Hose **(SN 0300218461 through 0300272360, Except SN 0300272174 through 0300272184)**	
63	1001233763	1	Breather Heater Installetion (Not Shown - See Separate Breakdown in this Section) **(SN 0300245668 through 03002723601, SN E00005754 through E300007988, Except SN 0300272174 through 0300272184, Excluding E300007847)**	

FIGURE 3-16. ENGINE AND PUMP SUB-ASSEMBLY - DEUTZ D2.9L4 (WITH ARCTIC PACKAGE) (ANSI AND CSA SPECS)

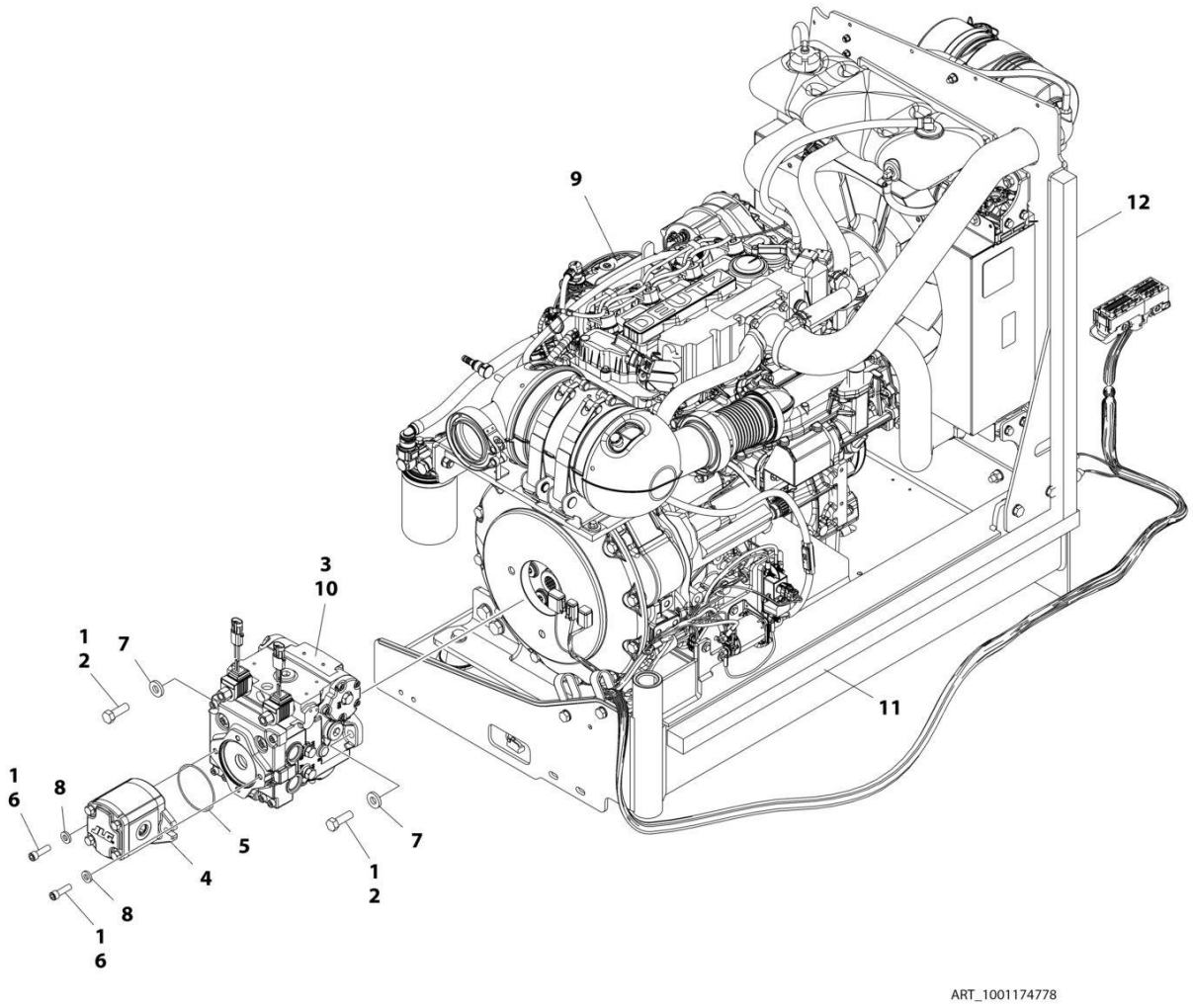

FIGURE 3-16. ENGINE AND PUMP SUB-ASSEMBLY - DEUTZ D2.9L4 (WITH ARCTIC PACKAGE) (ANSI AND CSA SPECS)

ITEM	PART NUMBER	QTY	DESCRIPTION	REV
	1001174778	Ref	ENGINE AND PUMP SUB-ASSEMBLY - DEUTZ D2.9L4 (WITH ARCTIC PACKAGE) (ANSI AND CSA SPECS)	F
1	0100011	AR	Compound, Locking	
2	0641812	2	Bolt, 1/2 x 1-1/2	
3	3020037	AR	Lube	
4	3600242	1	Gear Pump Assembly (See GEAR PUMP ASSEMBLY for Breakdown) **(SN 0300203771 through 0300233151)**	
4	1001214207	1	Gear Pump Assembly **(SN 0300233152 through 0300272360, Except SN 0300272174 through 0300272184)**	
4	70006356	1	Seal Kit	
5	3790152	1	O-Ring	
6	3931620	AR	Capscrew, 3/8 x 1-1/4	
6	3931618	AR	Capscrew, 3/8 x 1 1/8	
7	4891800	2	Washer, 1/2 Hardened	
8	4891600	2	Washer, 3/8 ID Hardened	
9	1001174777	1	Engine Assembly - Deutz D2.9L4 Engine (With Arctic Package) (ANSI and CSA Specs) (See ENGINE ASSEMBLY - DEUTZ D2.9L4 ENGINE (WITH ARCTIC PACKAGE) (ANSI AND CSA SPECS) for Breakdown)	
10	1001167036	1	Piston Pump Assembly (See PISTON PUMP ASSEMBLY for Breakdown)	
11	1001171953	1	Seal	
12	1001171954	1	Seal	

FIGURE 3-17. ENGINE ASSEMBLY - DEUTZ D2.9L4 ENGINE (WITH ARCTIC PACKAGE) (ANSI AND CSA SPECS)

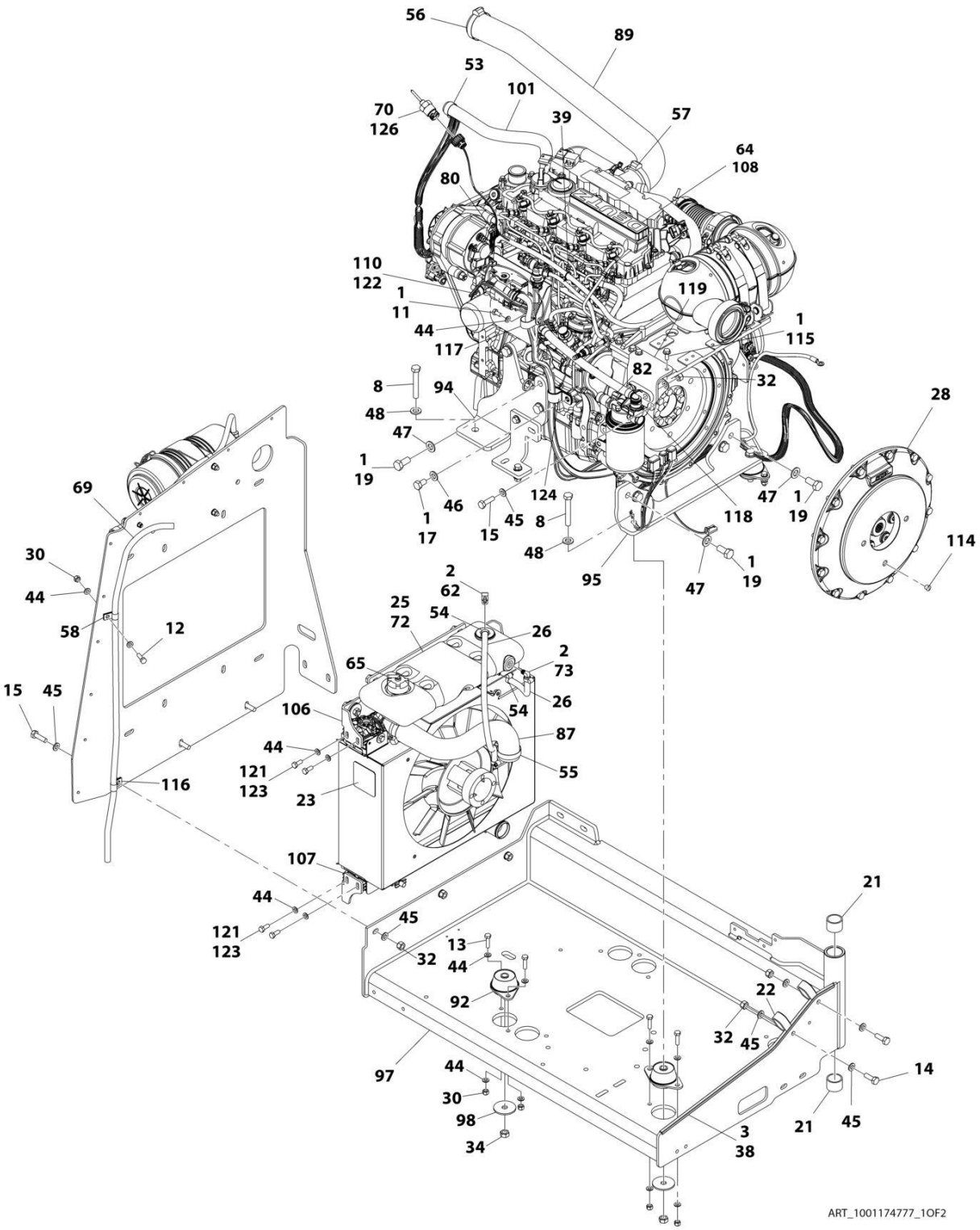

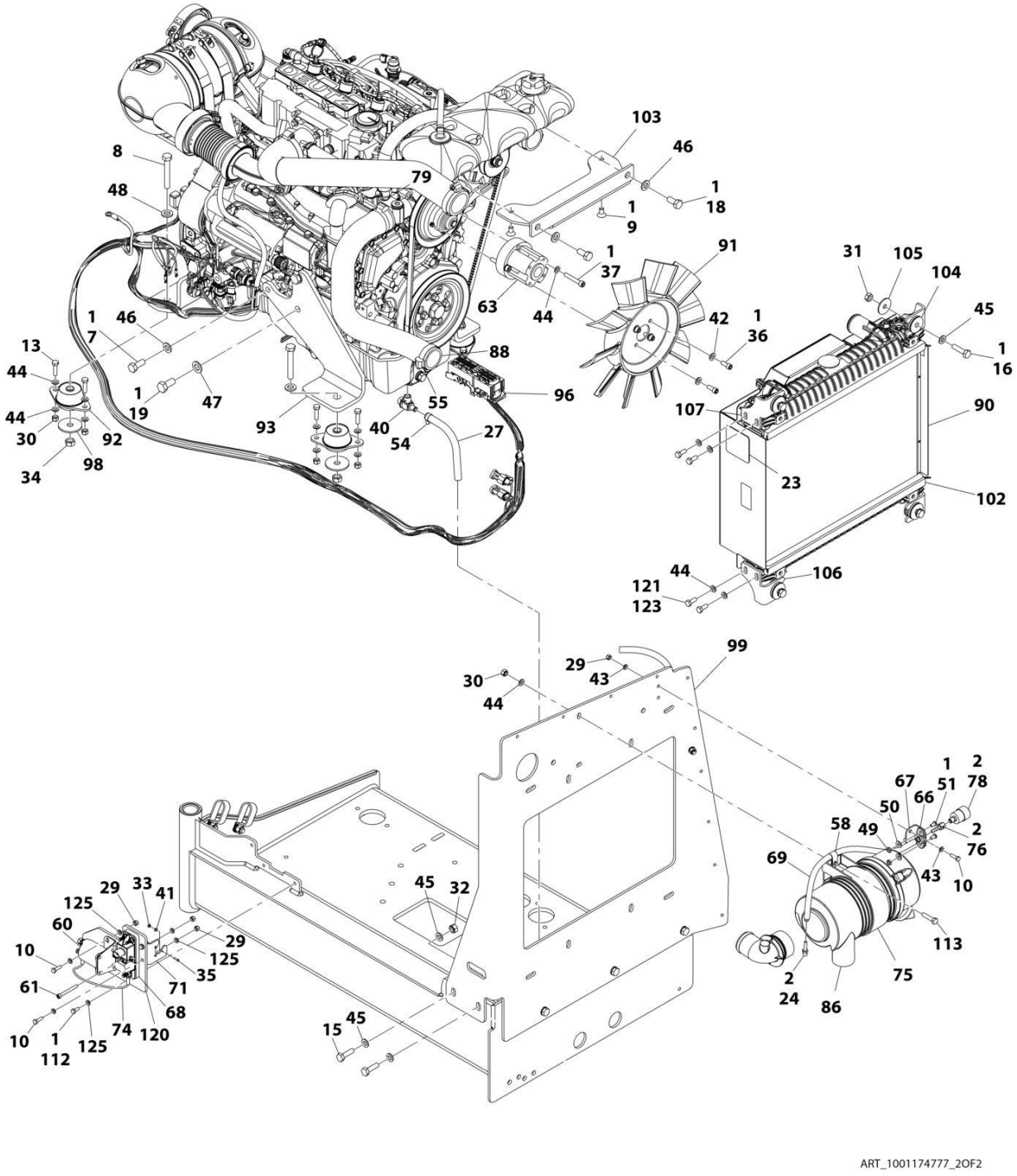
ART_1001174777_2OF2

FIGURE 3-17. ENGINE ASSEMBLY - DEUTZ D2.9L4 ENGINE (WITH ARCTIC PACKAGE) (ANSI AND CSA SPECS)

ITEM	PART NUMBER	QTY	DESCRIPTION	REV
	1001174777	Ref	ENGINE ASSEMBLY - DEUTZ D2.9L4 ENGINE (WITH ARCTIC PACKAGE) (ANSI AND CSA SPECS)	N
1	0100011	AR	Compound, Locking	
2	0100020	AR	Sealant, Pipe	
3	0100081	AR	Adhesive	
7	0711214	2	Bolt M12 x 30 **(SN 0300203771 through 0300214760)**	
7	0711214	1	Bolt M12 x 30 **(SN 0300214761 through 0300272360, Except SN 0300272174 through 0300272184)**	
8	0711224	4	Bolt M12 x 80	
9	0741606	2	Screw 3/8 x .75	
10	0760610	6	Bolt M6 x 20	
11	0760808	1	Bolt M8 x 16	
12	0760812	1	Bolt M8 x 25	
13	0760814	8	Bolt M8 x 30	
14	0761014	2	Bolt M10 x 30	
15	0761015	7	Bolt M10 x 35	
16	0761016	4	Bolt M10 x 40	
17	0761210	1	Bolt M12 x 20	
18	0761212	2	Bolt M12 x 25	
19	0771414	8	Bolt M14 x 30 **(SN 0300203771 through 0300214760)**	
19	0771414	9	Bolt M14 x 30 **(SN 0300214761 through 0300272360, Except SN 0300272174 through 0300272184)**	
21	0961951	2	Bushing	
22	1321716	2	Clamp	
23	1703162	2	Decal - Caution Fan	
24	2220315	1	Fitting, Barbed	
25	2300041	3 gal/ 11.3L	Coolant	
26	2720015	2 ft/0.61m	Hose	
27	2720340	8 in /0.2m	Hose	
28	2902065	1	Pump Coupling Kit (See PUMP COUPLING KIT for Breakdown)	
29	3290605	7	Nut, Lock M6 x 1	
30	3290805	11	Nut, Lock M8 x 1.25	
31	3291001	4	Nut, M10 x 1.5	
32	3291005	9	Nut, Lock M10 x 1.5	
33	3310401	3	Nut, #4	
34	3331215	4	Nut, M12 x 1.75	
35	3910408	3	Screw 4 x 1/2	
36	3931512	4	Capscrew 5/16 x 3/4	
37	4031914	4	Bolt M8 x 50	
38	4060805	2.25 ft/ 0.69m	Trim, Flex Shield	
39	4240099	AR	Tie-Strap	
40	4640751	1	Valve, Oil Drain	
41	4710400	3	Washer, #4	
42	4711500	4	Washer, 5/16	
43	4811700	16	Washer, M6 **(SN 0300203771 through 0300214760)**	
43	4811700	4	Washer, M6 **(SN 0300214761 through 0300272360, Except SN 0300272174 through 0300272184)**	
44	4811900	35	Washer, M8	

ITEM	PART NUMBER	QTY	DESCRIPTION	REV
45	4812000	22	Washer, M10	
46	4812100	5	Washer, M12 **(SN 0300203771 through 0300214760)**	
46	4812100	4	Washer, M12 **(SN 0300214761 through 0300272360, Except SN 0300272174 through 0300272184)**	
47	4812200	8	Washer, M14 **(SN 0300203771 through 0300214760)**	
47	4812200	9	Washer, M14 **(SN 0300214761 through 0300272360, Except SN 0300272174 through 0300272184)**	
48	5241200	4	Washer, M12 Hardened	
49	8305401	2	Nut, Jam .250-20	
50	8307109	2	Washer, .250	
51	8310548	2	Screw 1/4 x 1/2	
53	8405007	2	Clamp	
54	8405009	5	Clamp	
55	8405104	4	Clamp	
56	8405202	1	Clamp	
57	8405204	1	Clamp	
58	8406109	2	Clip	
60	1001117308	1	Relay, 200Amp	
60	3300220	2	Nut	
60	3321001	2	Nut, #10	
60	4761000	2	Washer, Lock #10	
60	1001111424	2	Washer	
61	1001118878	1	Bolt M6 x 55	
62	1001134488	1	Fitting, Barbed 90	
63	1001144116	1	Spacer, Fan	
64	1001136172	2.4 gal /9L	Oil, Motor	
65	1001136834	1	Cap, Tank	
66	1001138173	1	Support, Service Indicator	
67	1001138175	1	Bracket, Service Indicator	
68	1001138228	1	Relay, Power Module	
68	70023592	1	Fuse 20Amp	
68	70023593	1	Fuse 30Amp	
69	1001138248	5.25 ft/ 1.6m	Tube	
70	1001138827	1	Sensor, Coolant Level	
71	1001139240	1	Bracket	
72	1001140535	NLA	Tank, Surge (Use p/n 1001230635) **(SN 0300203771 through 0300241775)**	
72	1001230635	1	Tank, Surge (Includes Items 62, 70 & 73) **(SN 0300241775 through 0300272360, Except SN 0300272174 through 0300272184)**	
73	1001140564	1	Fitting, Barbed 90	
74	1001141304	1	Harness, Glow Plug	
75	1001141694	1	Clamp, Air Cleaner	
76	1001141995	1	Fitting, Barbed	
78	1001143390	1	Indicator	
79	1001143797	1	Fitting, Barbed	
80	1001178788	1	Cable, Alternator	
82	1001152489	1	Fitting, Barbed 90	
86	1001165388	1	Air Cleaner Assembly	
86	70003783	1	Element, Air Cleaner	
87	1001165405	1	Hose, Upper Radiator	
88	1001165406	1	Hose, Lower Radiator	

ITEM	PART NUMBER	QTY	DESCRIPTION	REV
89	1001165721	1	Hose, Air Intake	
90	1001165722	1	Radiator	
91	1001165849	1	Fan	
92	1001166718	4	Mount, Motor	
93	1001166921	1	Plate, Engine Mount	
94	1001166922	1	Plate, Engine Mount	
95	1001166924	1	Plate, Engine Mount	
96	1001167108	1	Harness Engine - Deutz D2.9L4 (See ELECTRICAL SECTION for Breakdown)	
97	1001167520	1	Tray, Engine	
98	1001168018	4	Washer, Special	
99	1001168026	1	Plate, Radiator Mounting	
101	1001168099	1	Hose	
102	1001168166	2	Seal	
103	1001168950	1	Bracket	
104	1001169054	4	Isolator	
105	1001169138	4	Washer, Snubbing	
106	1001169967	2	Bracket	
107	1001170035	2	Bracket	
108	1001170617	1	Engine, Deutz D2.9L4 (See ENGINE COMPONENTS - DEUTZ D2.9L4 ENGINE for Breakdown)	
110	1001140312	1	Heater, Engine Block	
112	0760607	3	Bolt M6 x 14	
113	0760815	2	Bolt M8 x 35	
114	3520054	1	Plug	
115	5250810	2	Bolt M8 x 20	
116	8406110	1	Clip	
117	8406201	1	Clip	
118	1001177359	1	Hose	
119	1001178876	1	Mount, Fuel Filter	
120	1001179903	1	Bracket	
121	1001180620	AR	Adhesive	
122	1001181895	AR	Adhesive	
123	0760810	8	Bolt M8 x 20	
124	1001191620	1	Clamp	
125	4811702	AR	Washer M6	
126	1001182997	AR	Adhesive	

FIGURE 3-18. BREATHER HEATER INSTALLATION - DEUTZ D2.9L4 ENGINE WITH ARCTIC PACKAGE

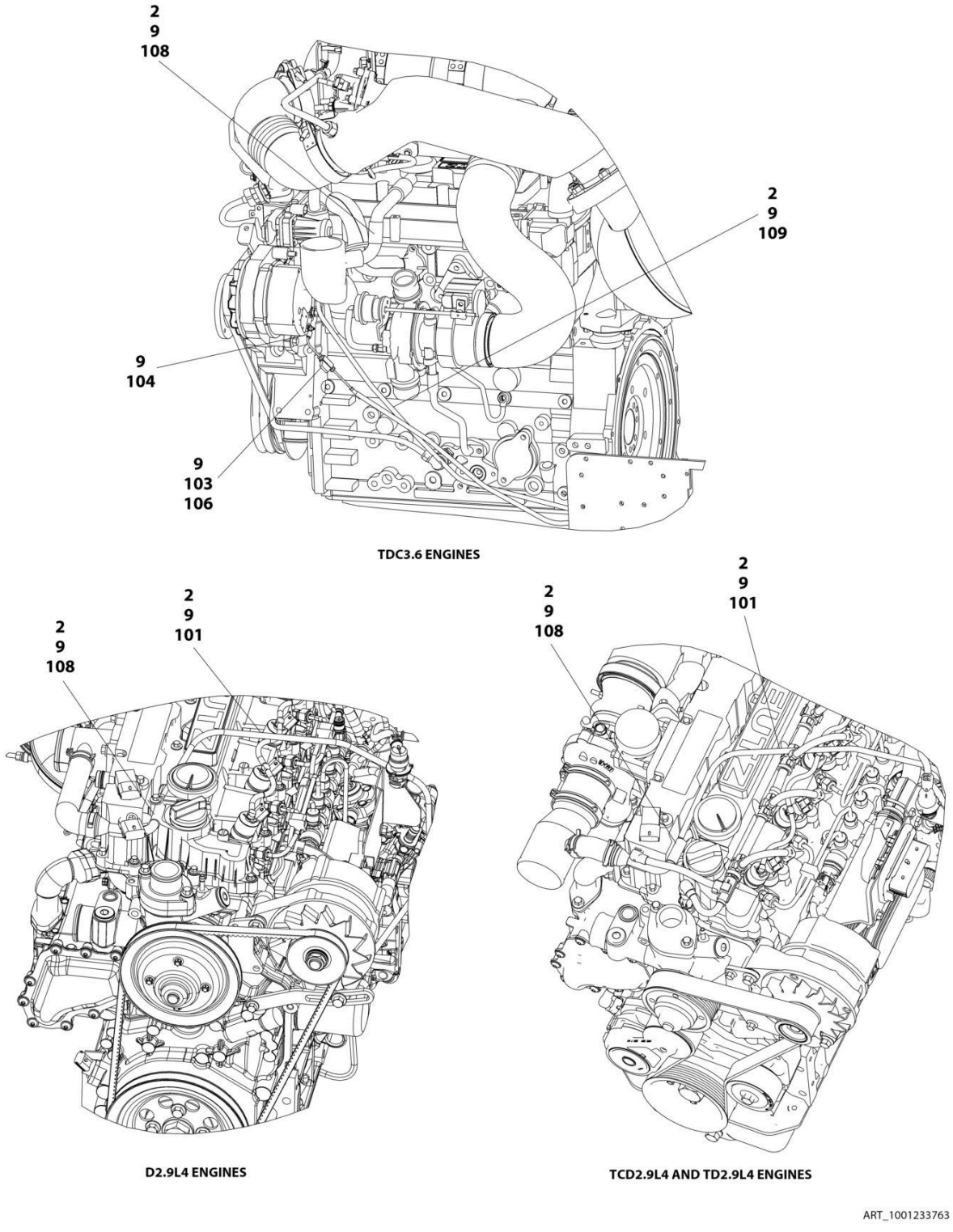

FIGURE 3-18. BREATHER HEATER INSTALLATION - DEUTZ D2.9L4 ENGINE WITH ARCTIC PACKAGE

ITEM	PART NUMBER	QTY	DESCRIPTION	REV
	1001233763	Ref	BREATHER HEATER INSTALLATION - DEUTZ ENGINES	D
2	4240099	AR	Tie-Strap	
9	1001243895	1	Breather Heater Harness	C
101	2820035	AR	Insulation	
103	2400060	1	Fuseholder with Cover	
104	4460043	1	Terminal, Ring	
105	4460722	1	Terminal, Ring (Not Shown)	
106	1001196634	1	Fuse - 2 Amp	
108	1001232842	1	Breather Heater Kit	

FIGURE 3-19. BRACKET ASSEMBLY - FUEL PUMP AND FILTER (DEUTZ D2.9L4 ENGINE)

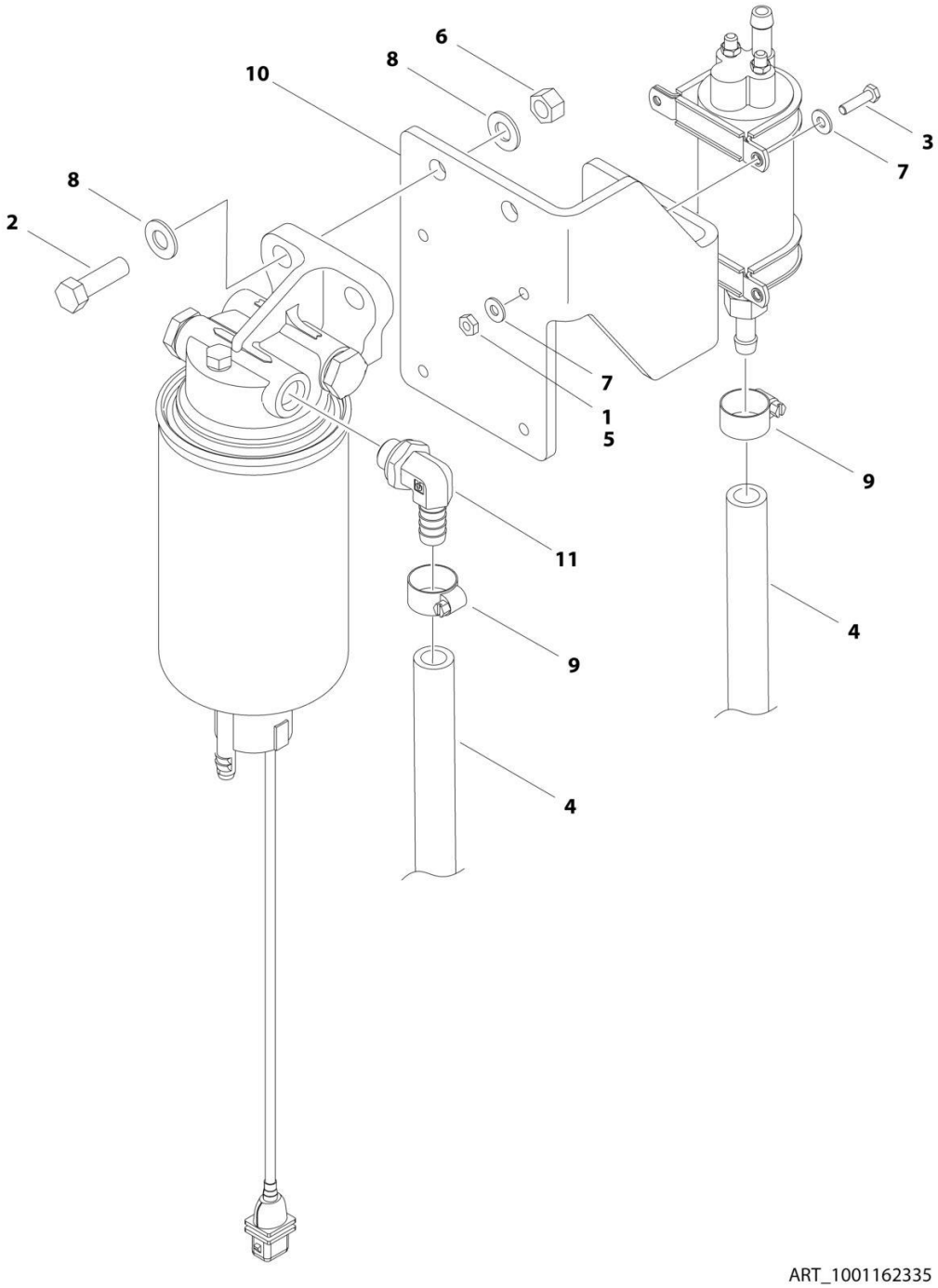

FIGURE 3-19. BRACKET ASSEMBLY - FUEL PUMP AND FILTER (DEUTZ D2.9L4 ENGINE)

ITEM	PART NUMBER	QTY	DESCRIPTION	REV
	1001162335	Ref	BRACKET ASSEMBLY - FUEL PUMP AND FILTER (DEUTZ D2.9L4 ENGINE)	D
1	0100011	AR	Compound, Locking	
2	0641610	2	Bolt, 3/8 x 1-1/4	
3	0721006	4	Bolt, #10 x 3/4	
4	1001154405	1.5 ft /0.4m	Hose	
5	3311001	4	Nut, #10	
6	3311605	2	Nut, Lock 3/8	
7	4711000	8	Washer #10	
8	4711600	4	Washer, 3/8	
9	8405006	2	Clamp	
10	1001141870	1	Plate, Fuel Pump Mounting	
11	1001142501	1	Fitting, Elbow Barbed	

FIGURE 3-20. ENGINE COMPONENTS - DEUTZ D2.9L4 ENGINE

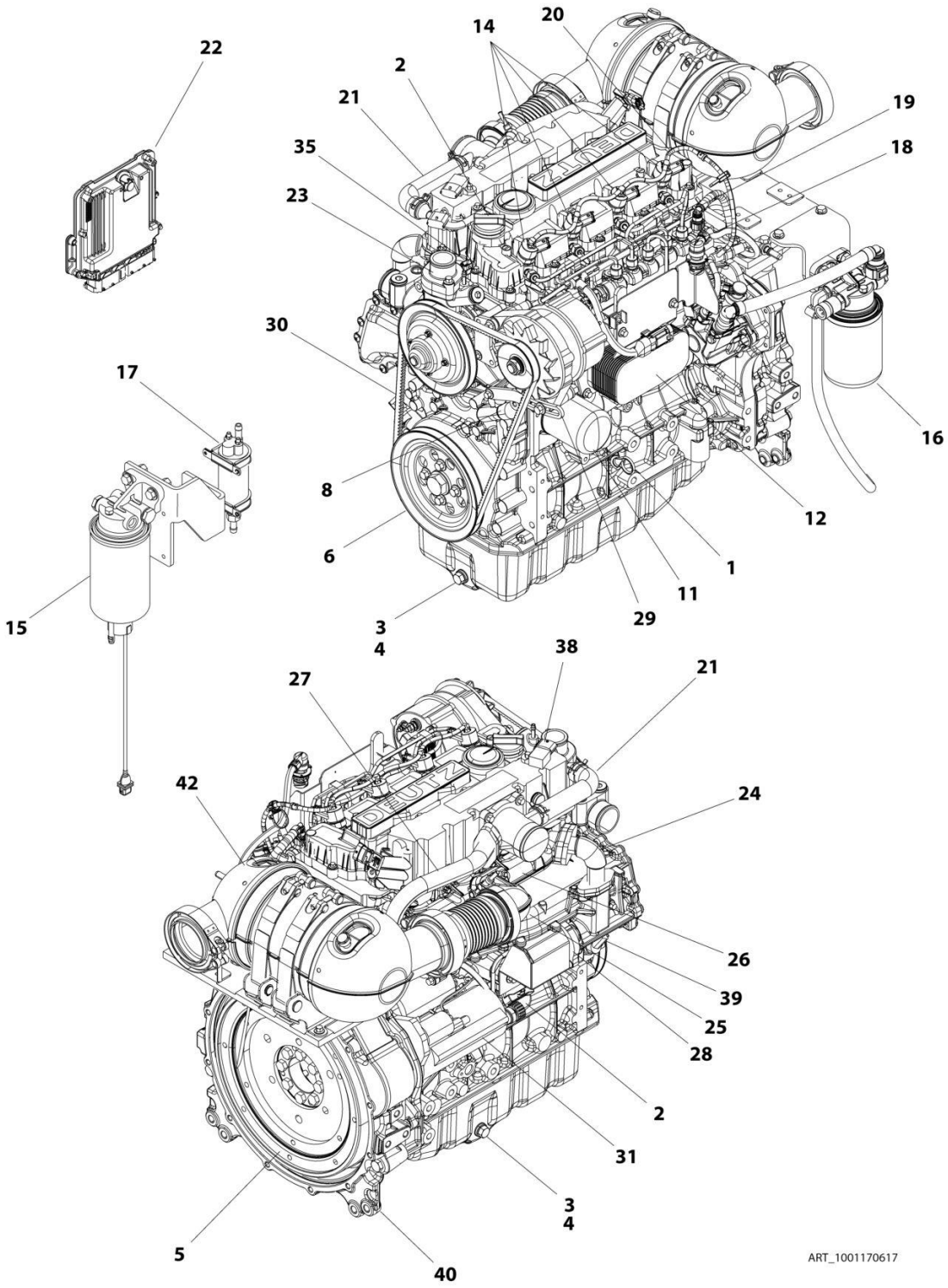

FIGURE 3-20. ENGINE COMPONENTS - DEUTZ D2.9L4 ENGINE

ITEM	PART NUMBER	QTY	DESCRIPTION	REV
	1001170617	Ref	ENGINE COMPONENTS - DEUTZ D2.9L4 ENGINE	D
1	70024904	1	Dipstick	
1	70024905	1	O-Ring	
2	7020465	2	Cap, Filler	
3	70025088	2	Plug, Oil	
4	7020404	2	Ring, Sealing	
5	70001870	1	Flywheel	
5	7024579	1	Ring, Gear	
6	70025198	1	Pulley, Crank	
7	70024906	1	Gasket, Head (Not Shown)	
7	70025195	1	Gasket, Valve Cover (Not Shown)	
7	70005171	1	Gasket, Valve Cover (Not Shown)	
8	70025076	1	Valve	
8	70025091	1	Plug	
8	70025176	1	Spring	
8	70025082	1	Seal	
9	70004280	1	Seal, Crankshaft (Front) (Not Shown)	
9	70002718	1	Seal, Crankshaft (Rear) (Not Shown)	
10	70005172	1	Pump, Oil Lube (Not Shown)	
10	70025135	1	O-Ring (Not Shown)	
10	70005173	1	Gasket (Not Shown)	
11	7016331	1	Filter, Oil	
12	70004275	1	Cooler, Oil	
12	70024925	1	Gasket	
13	70025171	1	Pipe, Oil Suction (Not Shown)	
14	70004281	4	Injector, Fuel	
14	70025140	4	Washer, Sealing	
14	70025146	4	Clamp (Top of Injector)	
14	70025145	4	O-Ring	
14	70025154	4	Shoe, Clamping	
15	70024961	1	Bracket, Fuel Filter	
15	70025153	1	Filter, Fuel	
15	70024513	1	Cable, Sensor	
15	70025239	1	Seal	
16	70025160	1	Bracket, Fuel Filter	
16	70025161	1	Filter, Fuel	
16	70024504	1	Sensor, Pressure	
16	70024920	1	O-Ring	
16	70004513	2	Ring, Sealing	
17	70005174	NLA	Pump, Fuel (Use p/n 1001226098)	
17	70025144	2	Clamp	
18	70025151	1	Rail, Fuel	
18	70025235	1	Repair Kit	
18	70025240	1	O-Ring	
19	70025182	1	Line, Fuel (Cylinder 1 + 2)	
19	70025183	1	Line, Fuel (Cylinder 3 + 4)	
19	70025184	1	Line, Fuel (Fuel Rail to Pump)	
20	70024502	1	Fuel Return Pipe	
20	70025185	1	Hose, Fuel	
20	70025101	2	Clamp	

ITEM	PART NUMBER	QTY	DESCRIPTION	REV
20	70025109	2	Clamp	
20	70025115	1	Clamp, Pipe	
20	70025133	1	Hose	
20	70025148	1	Connector, Plug-in	
21	70005182	1	Elbow, Air Charger	
21	70005176	1	O-Ring	
21	70005177	1	Gasket	
21	70005180	1	Line, Breather	
21	70005181	1	O-Ring	
21	70005183	1	Line, Breather	
21	70025111	2	Clamp	
22	70025210	1	Module, ECU	
23	70024910	1	Pump, Water	
23	70025084	1	Plug	
23	7020492	1	O-Ring	
23	70025200	1	Seal	
23	70024473	1	Thermostat	
23	70005184	1	O-Ring (Thermostat)	
23	70025142	1	Cover, Thermostat	
23	70025159	1	Pulley, Water Pump	
24	70025177	1	Pipe	
24	70025179	1	Gasket	
25	70005185	1	Manifold	
25	70024912	1	Gasket	
26	70004282	1	Manifold, Exhaust	
26	70025164	1	Gasket, Exhaust Manifold	
27	70005186	1	Pipe	
27	70025179	1	Gasket (Two Hole)	
27	70025180	1	Gasket (Three Hole)	
28	70004283	1	Module, ERG	
28	70005188	1	Valve, Control	
28	70005189	1	Parts, Service	
29	70024914	1	Alternator	
29	70025149	1	Regulator	
29	70025131	1	Fan	
29	70025150	1	Pulley	
29	70025191	1	Plate, Retaining	
29	70025201	1	Bracket, Alternator	
30	70024913	1	V-Belt	
31	70024915	1	Starter	
32	70025231	1	Harness, Glow Plug (Not Shown)	
32	70025233	1	Connector (Not Shown)	
33	70025221	1	Connector, Plug-In (Not Shown)	
33	70025781	1	Connector, Plug-In (Not Shown)	
33	70025779	1	Ring, Fastening (Not Shown)	
34	70004284	1	Harness, Engine (Not Shown)	
34	70025165	1	Plate, Retaining (Not Shown)	
34	70025216	1	Adapter (Not Shown)	
34	70025215	1	Bracket, Fixing (Not Shown)	
34	70025228	2	Bracket (Not Shown)	
34	70025226	1	Connector, Plug-In (Not Shown)	

ITEM	PART NUMBER	QTY	DESCRIPTION	REV
34	70025220	5	Connector, Plug-In (Not Shown)	
34	70025222	3	Connector, Plug-In (Not Shown)	
34	70025223	1	Connector, Plug-In (Not Shown)	
34	70025219	1	Connector, Plug-In (Not Shown)	
34	70025238	1	Connector, Plug-In (Not Shown)	
34	70025221	2	Connector, Plug-In (Not Shown)	
34	70025217	8	Clamp (Not Shown)	
34	70025213	2	Clip (Not Shown)	
34	70025209	1	Bracket (Not Shown)	
34	70025225	1	Support (Not Shown)	
34	70025218	3	Clamp (Not Shown)	
34	70025237	1	Connector, Plug-In (Not Shown)	
34	70025214	1	Cap (Not Shown)	
34	70025224	2	Clamp (Not Shown)	
34	70025166	1	Support, Harness (Not Shown)	
34	70025211	1	Plate, Retaining (Not Shown)	
34	70025189	1	Plate, Retaining (Not Shown)	
34	70025236	1	Support, Harness (Not Shown)	
35	70024918	1	Sender, Temperature	
36	70024504	1	Sensor, Pressure (Not Shown - Located Left Side Front)	
36	70024920	1	O-Ring (Not Shown)	
37	70024503	1	Sensor, Speed (Not Shown)	
37	70005191	1	O-Ring	
38	70024507	1	Sensor, Pressure	
38	70025120	1	Seal	
39	70024503	1	Sensor, Speed	
39	70024917	1	Seal	
40	70025192	1	Housing	
40	70025113	2	Pin	
41	70000345	4	Plug, Glow (Not Shown)	
42	70004285	1	Outlet, Muffler	
42	70025241	1	Clip	
42	04600004	2	Gasket	
42	70004504	1	Compensator	
42	70024512	1	Clamp	
42	04603585	1	Clamp	

FIGURE 3-21. ENGINE INSTALLATION - GM ENGINE (WITHOUT ARCTIC PACKAGE) (SN 0300203771 through 0300222291)

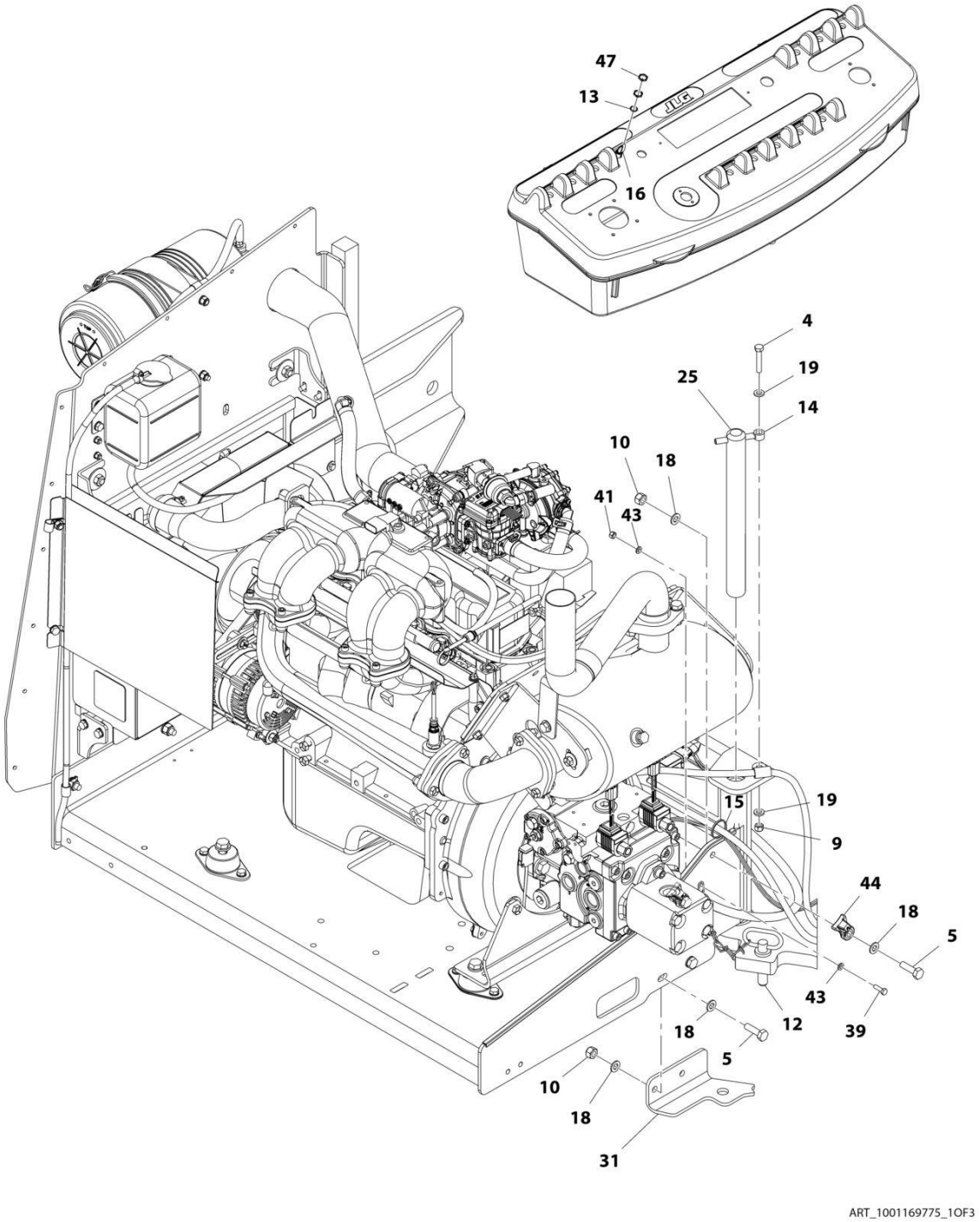

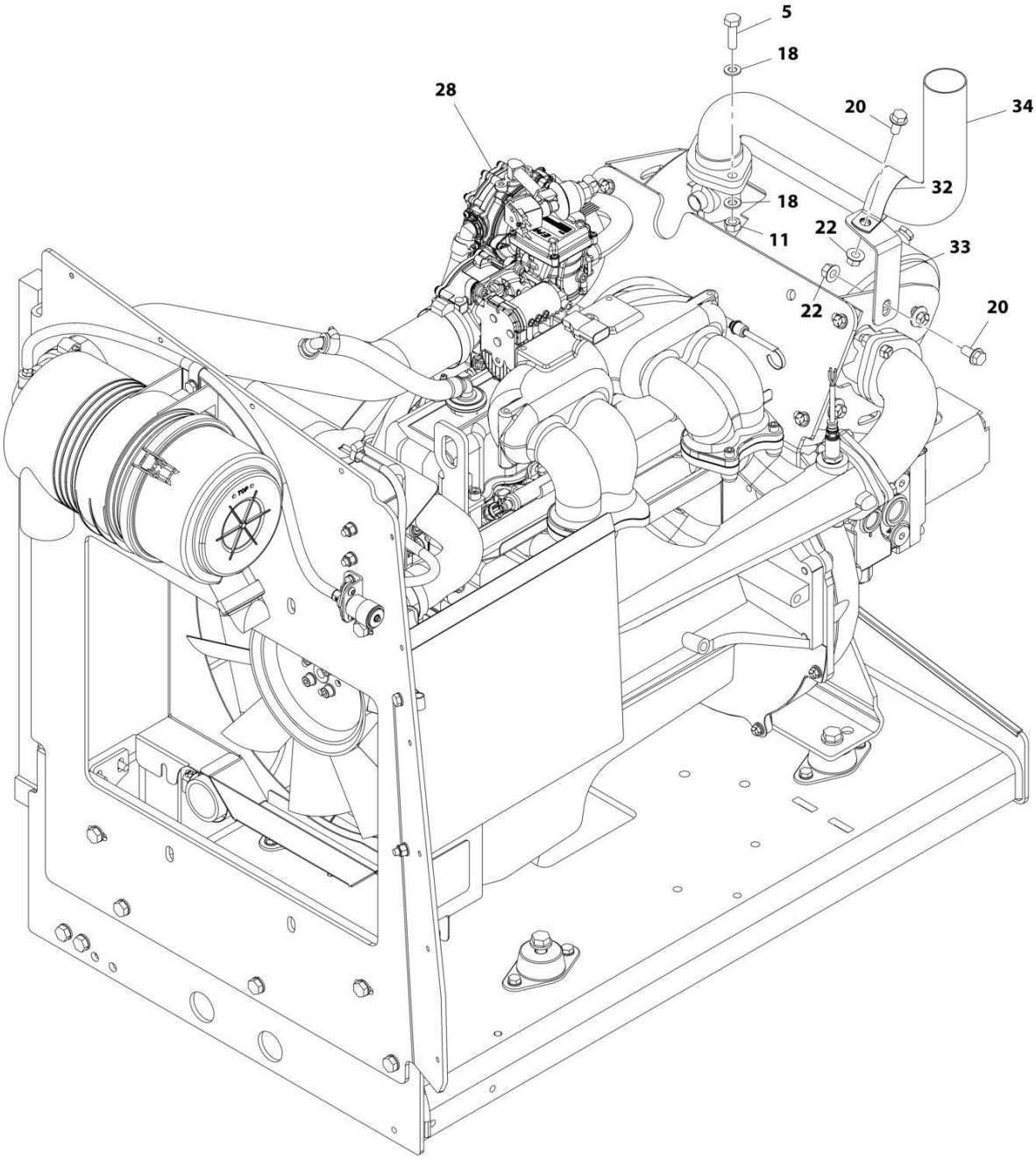

ART_1001169775_2OF3

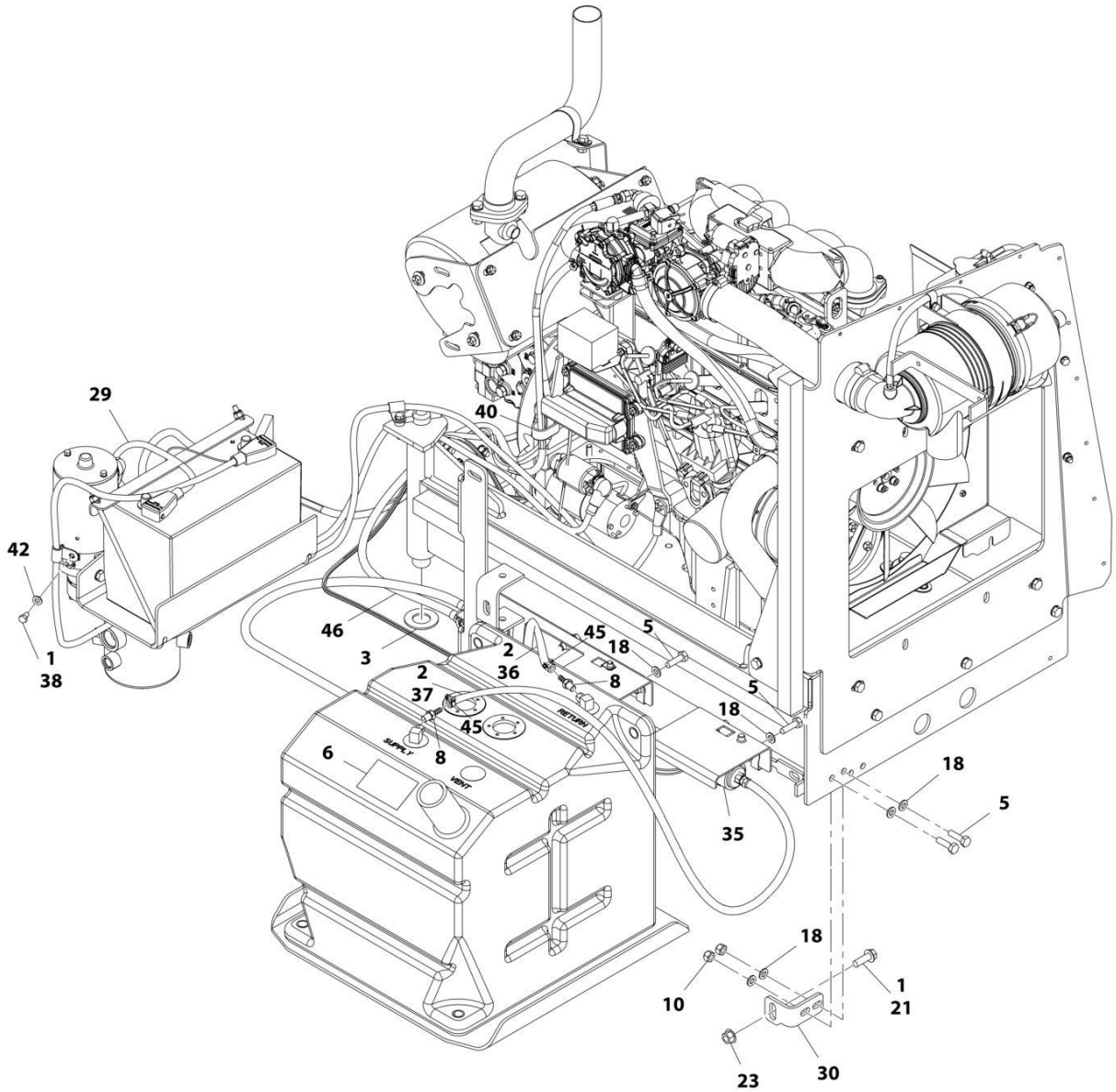

ART_1001169775_3OF3

FIGURE 3-21. ENGINE INSTALLATION - GM ENGINE (WITHOUT ARCTIC PACKAGE) (SN 0300203771 through 0300222291)

ITEM	PART NUMBER	QTY	DESCRIPTION	REV
	1001169775	Ref	ENGINE INSTALLATION - GM ENGINE (WITHOUT ARCTIC PACKAGE) **(SN 0300203771 through 0300222291)**	F
1	0100011	AR	Compound, Locking	
2	0100020	AR	Sealant, Pipe	
3	0440162	1	Bearing	
4	0700817	1	Bolt M8 x 45	
5	0761015	12	Bolt M10 x 35	
6	1701542	1	Decal - Gas **(SN 0300203771 through 0300214760)**	
6	1701542	2	Decal - Gas **(SN 0300214761 through 0300222291)**	
7	1701543	1	Decal - LPG	
8	2180348	2	Fitting, Barbed	
9	3290805	1	Nut, Lock M8 x 1.25	
10	3291005	6	Nut, Lock, M10 x 1.5	
11	3291007	2	Nut, Lock M10 x 1.5	
12	3422532	1	Pin	
13	3790012	1	O-Ring	
14	3841143	1	Keeper, Pin	
15	4240099	AR	Tie-Strap	
16	1001161710	1	Switch, Toggle	
18	4812000	20	Washer M10	
19	5240800	2	Washer M8 Hardened	
20	5251010	2	Bolt M10 x 20	
21	5251215	1	Bolt M12 x 35	
22	5261018	2	Nut, Flange M10	
23	5261200	1	Nut M12 Grade 10.9	
25	1001135196	1	Pin	
28	1001166202	1	Engine and Pump Sub-Assembly - GM Engine (Without Arctic Package) (See ENGINE AND PUMP SUB-ASSEMBLY - GM ENGINE (WITHOUT ARCTIC PACKAGE) for Breakdown)	
29	1001167039	1	Battery Cable Kit	
29	70009001	1	Cable, Battery (Black) (Battery Negative, Engine Ground, Auxiliary Power Pump to Turntable Ground)	
29	70009002	1	Cable, Battery (Red) (Auxiliary Power Relay to Auxiliary Power Pump)	
29	70009003	1	Cable, Battery (Red) (Battery Positive, Auxiliary Power Relay to Starter)	
30	1001167512	1	Bracket, Engine Tray Stow	
31	1001169823	1	Plate, Engine Lock	
32	1001170719	1	Clamp	
33	1001172003	1	Support, Muffler	
34	1001172791	1	Pipe, Exhaust	
35	1001190920	1	Fuel System Mounting (See FUEL SYSTEM MOUNTING - GM ENGINES for Breakdown)	
36	1001175021	1	Hose	
37	1001175022	1	Hose	
38	0641504	1	Bolt 5/16 x 1/2	
39	0760610	1	Bolt, M6 x 20	
40	1321716	1	Clamp **(SN 0300203771 through 0300214760)**	
41	3290605	1	Nut, Lock M6 x 1	
42	4711500	1	Washer, 5/16	

ITEM	PART NUMBER	QTY	DESCRIPTION	REV
43	4811700	2	Washer, M6	
44	1001156107	2	Holder, Cable	
45	1001174486	2	Clamp	
46	1001181366	1	Hose	
47	1001155044	2	Nut, Special 15/32	

FIGURE 3-22. ENGINE INSTALLATION - GM ENGINE (WITHOUT ARCTIC PACKAGE) (SN 0300222292 through 0300272360)

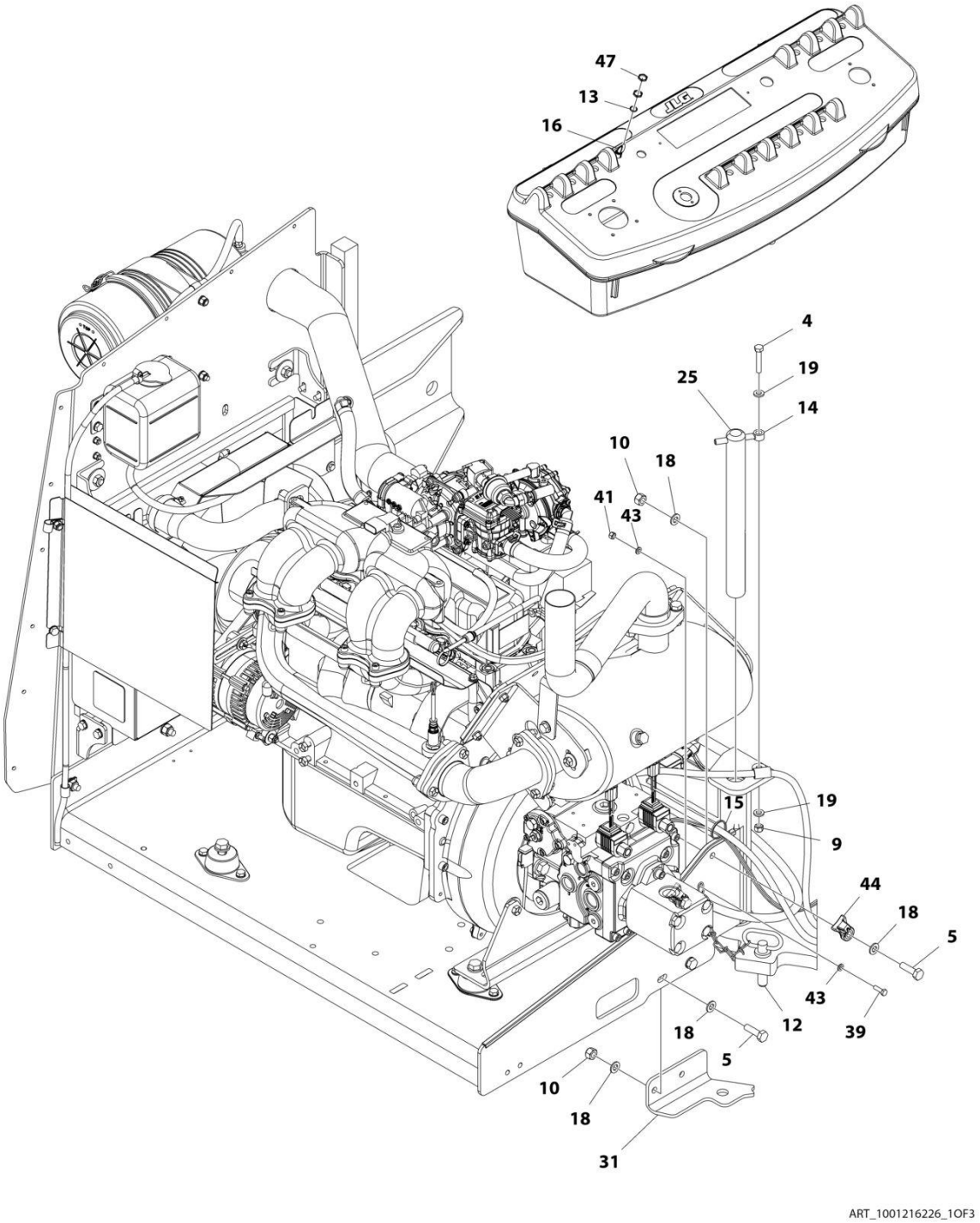

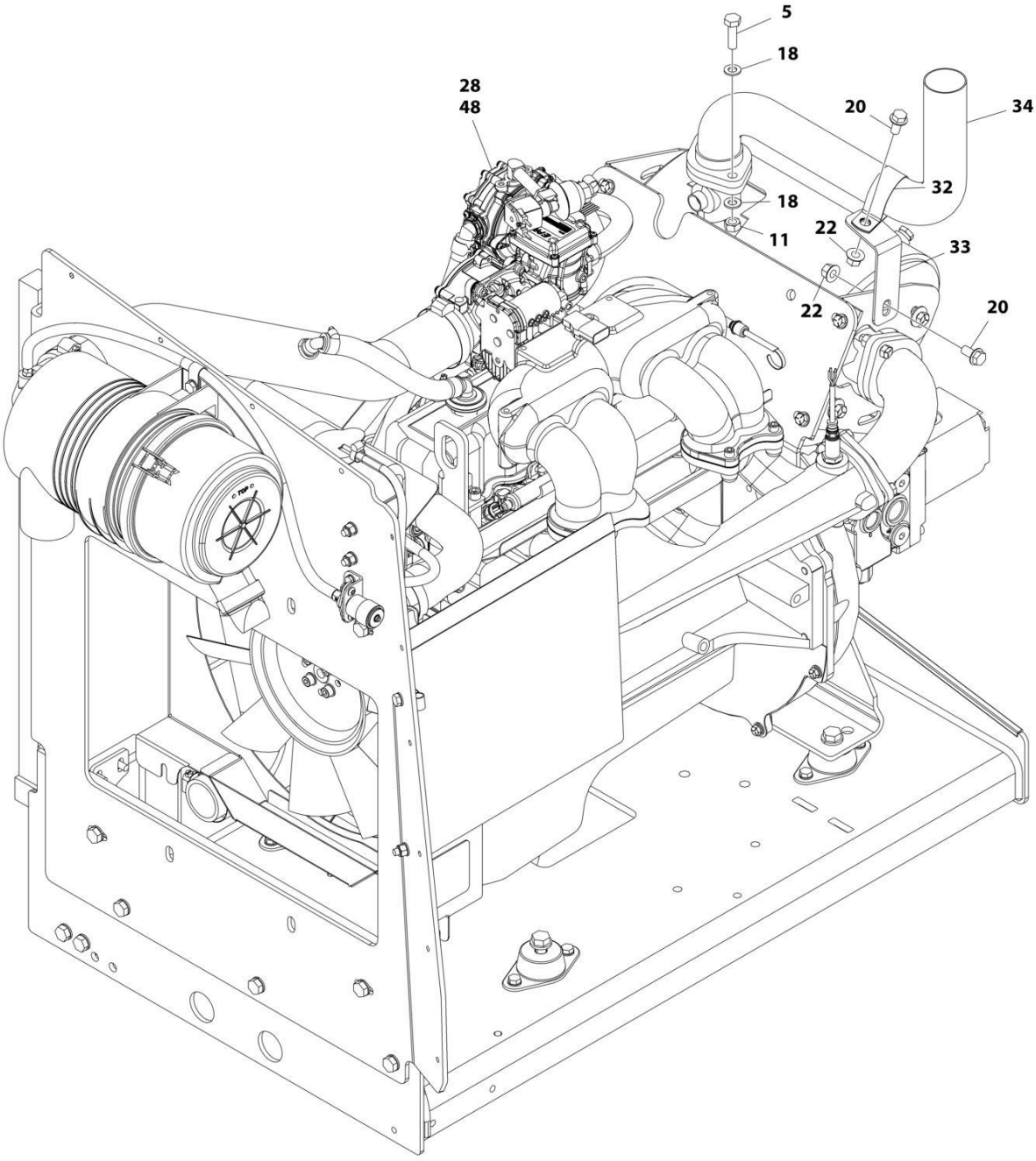
5
18
28
48
20
34
32
18
11
22
33
22
20
ART_1001216226_2OF3

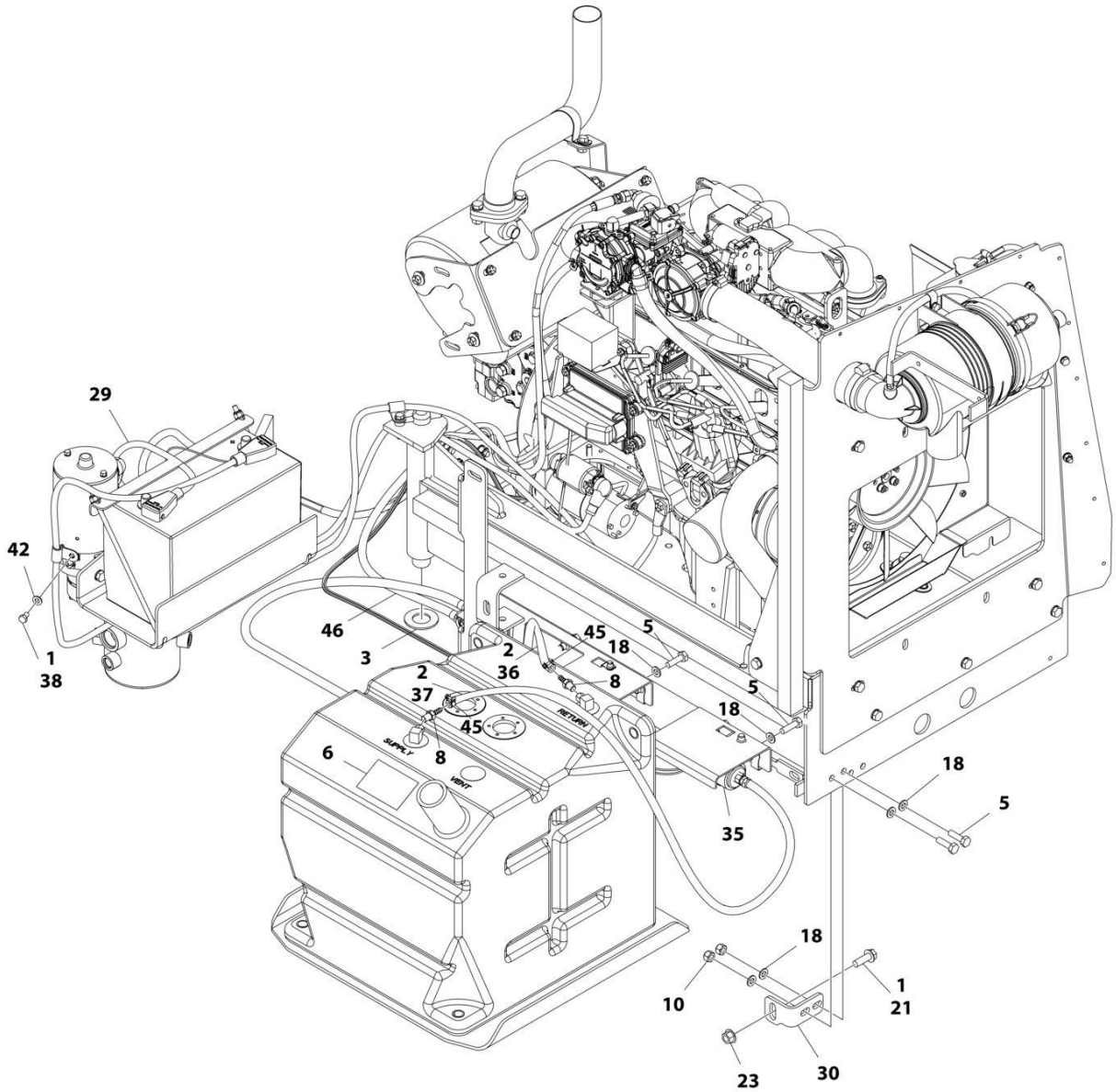

ART_1001216226_3OF3

FIGURE 3-22. ENGINE INSTALLATION - GM ENGINE (WITHOUT ARCTIC PACKAGE) (SN 0300222292 through 0300272360)

ITEM	PART NUMBER	QTY	DESCRIPTION	REV
	1001216226	Ref	ENGINE INSTALLATION - GM ENGINE (WITHOUT ARCTIC PACKAGE)	C
1	0100011	AR	Compound, Locking	
2	0100020	AR	Sealant, Pipe	
3	0440162	1	Bearing	
4	0700817	1	Bolt M8 x 45	
5	0761015	12	Bolt M10 x 35	
6	1701542	2	Decal - Gas	
7	1701543	1	Decal - LPG (Not Shown)	
8	2180348	2	Fitting, Barbed	
9	3290805	1	Nut, Lock M8 x 1.25	
10	3291005	6	Nut, Lock, M10 x 1.5	
11	3291007	2	Nut, Lock M10 x 1.5	
12	3422532	1	Pin	
13	3790012	1	O-Ring	
14	3841143	1	Keeper, Pin	
15	4240099	AR	Tie-Strap	
16	1001161710	1	Switch, Toggle	
18	4812000	20	Washer M10	
19	5240800	2	Washer M8 Hardened	
20	5251010	2	Bolt M10 x 20	
21	5251215	1	Bolt M12 x 35	
22	5261018	1	Nut, Flange M10	
23	5261200	2	Nut M12 Grade 10.9	
25	1001135196	1	Pin	
28	1001216224	1	Engine and Pump Sub-Assembly - GM Engine (Without Arctic Package) (See ENGINE AND PUMP SUB-ASSEMBLY - GM ENGINE (WITHOUT ARCTIC PACKAGE) for Breakdown)	
29	1001167039	1	Battery Cable Kit	
29	70009001	1	Cable, Battery (Black) (Battery Negative, Engine Ground, Auxiliary Power Pump to Turntable Ground)	
29	70009002	1	Cable, Battery (Red) (Auxiliary Power Relay to Auxiliary Power Pump)	
29	70009003	1	Cable, Battery (Red) (Battery Positive, Auxiliary Power Relay to Starter)	
30	1001167512	1	Bracket, Engine Tray Stow	
31	1001169823	1	Plate, Engine Lock	
32	1001170719	1	Clamp	
33	1001172003	1	Support, Muffler	
34	1001172791	1	Pipe, Exhaust	
35	1001190920	1	Fuel System Mounting (See FUEL SYSTEM MOUNTING - GM ENGINES for Breakdown)	
36	1001175021	1	Hose	
37	1001175022	1	Hose	
38	0641504	1	Bolt 5/16 x 1/2	
39	0760610	1	Bolt, M6 x 20	
40	0100011	AR	Compound, Locking (Not Shown)	
41	3290605	1	Nut, Lock M6 x 1	
42	4711500	1	Washer, 5/16	
43	4811700	2	Washer, M6	

ITEM	PART NUMBER	QTY	DESCRIPTION	REV
44	1001156107	2	Holder, Cable	
45	1001174486	2	Clamp	
46	1001181366	1	Hose	
47	1001155044	2	Nut, Special 15/32	
48	1001214862	1	Engine - GM Engine	

FIGURE 3-23. ENGINE AND PUMP SUB-ASSEMBLY - GM ENGINE (WITHOUT ARCTIC PACKAGE) (SN 0300203771 through 0300222291)

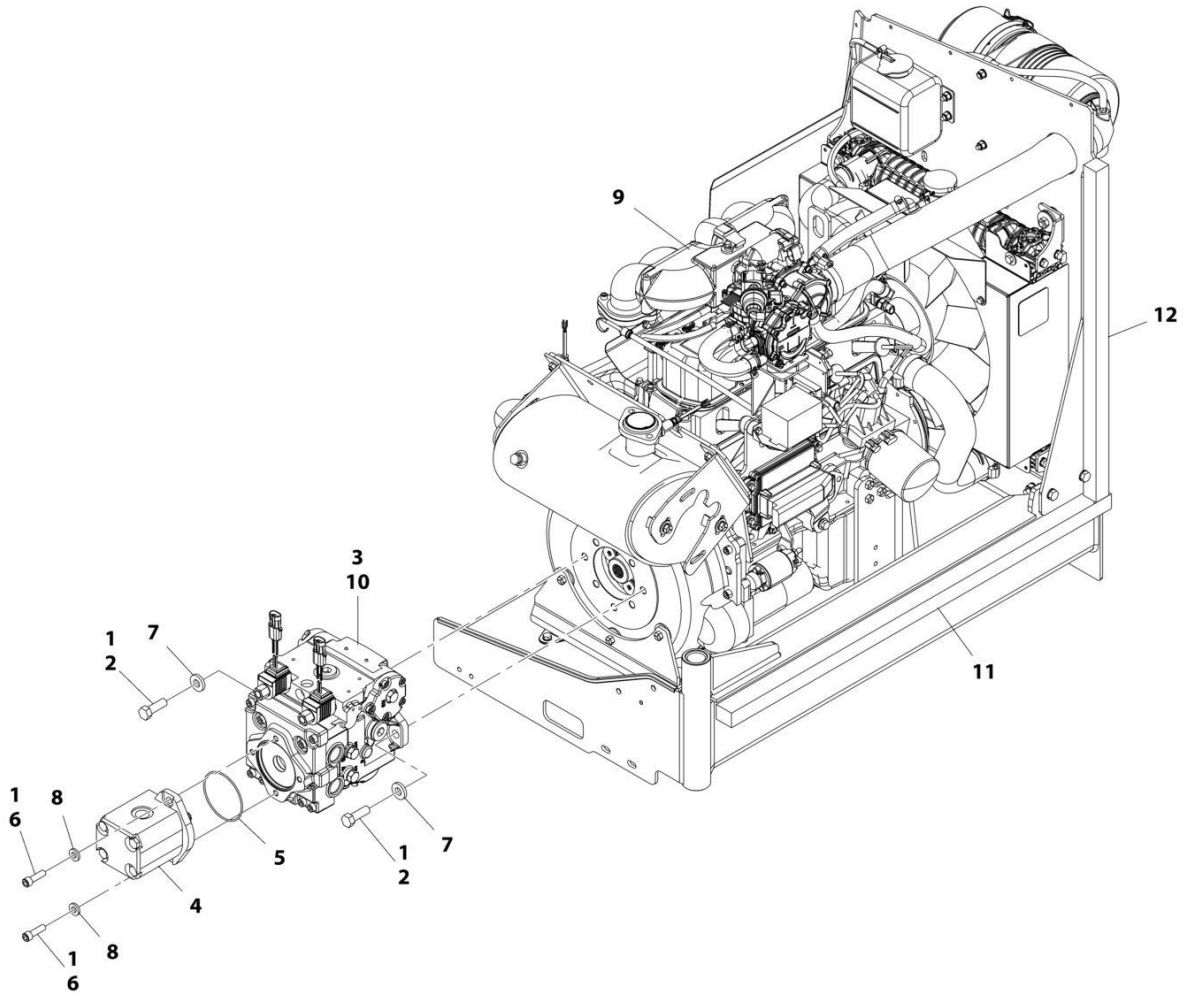

FIGURE 3-23. ENGINE AND PUMP SUB-ASSEMBLY - GM ENGINE (WITHOUT ARCTIC PACKAGE) (SN 0300203771 through 0300222291)

ITEM	PART NUMBER	QTY	DESCRIPTION	REV
	1001166202	Ref	ENGINE AND PUMP SUB-ASSEMBLY - GM ENGINE (WITHOUT ARCTIC PACKAGE) **(SN 0300203771 through 0300222291)**	J
1	0100011	AR	Compound, Locking	
2	0641812	2	Bolt, 1/2 x 1-1/2	
3	3020037	AR	Lube	
4	3600242	1	Gear Pump Assembly (See GEAR PUMP ASSEMBLY for Breakdown)	
5	3790152	1	O-Ring	
6	3931620	2	Capscrew, 3/8 x 1-1/4	
7	4891800	2	Washer, 1/2 Hardened	
8	4891600	2	Washer, 3/8 Hardened	
9	1001166203	1	Engine Assembly - GM Engine (Without Arctic Package) (See ENGINE ASSEMBLY - GM ENGINE (WITHOUT ARCTIC PACKAGE) for Breakdown)	
10	1001167036	1	Piston Pump Assembly (See PISTON PUMP ASSEMBLY for Breakdown)	
11	1001171953	1	Seal	
12	1001171954	1	Seal	

FIGURE 3-24. ENGINE AND PUMP SUB-ASSEMBLY - GM ENGINE (WITHOUT ARCTIC PACKAGE) (SN 0300222292 through 0300272360)

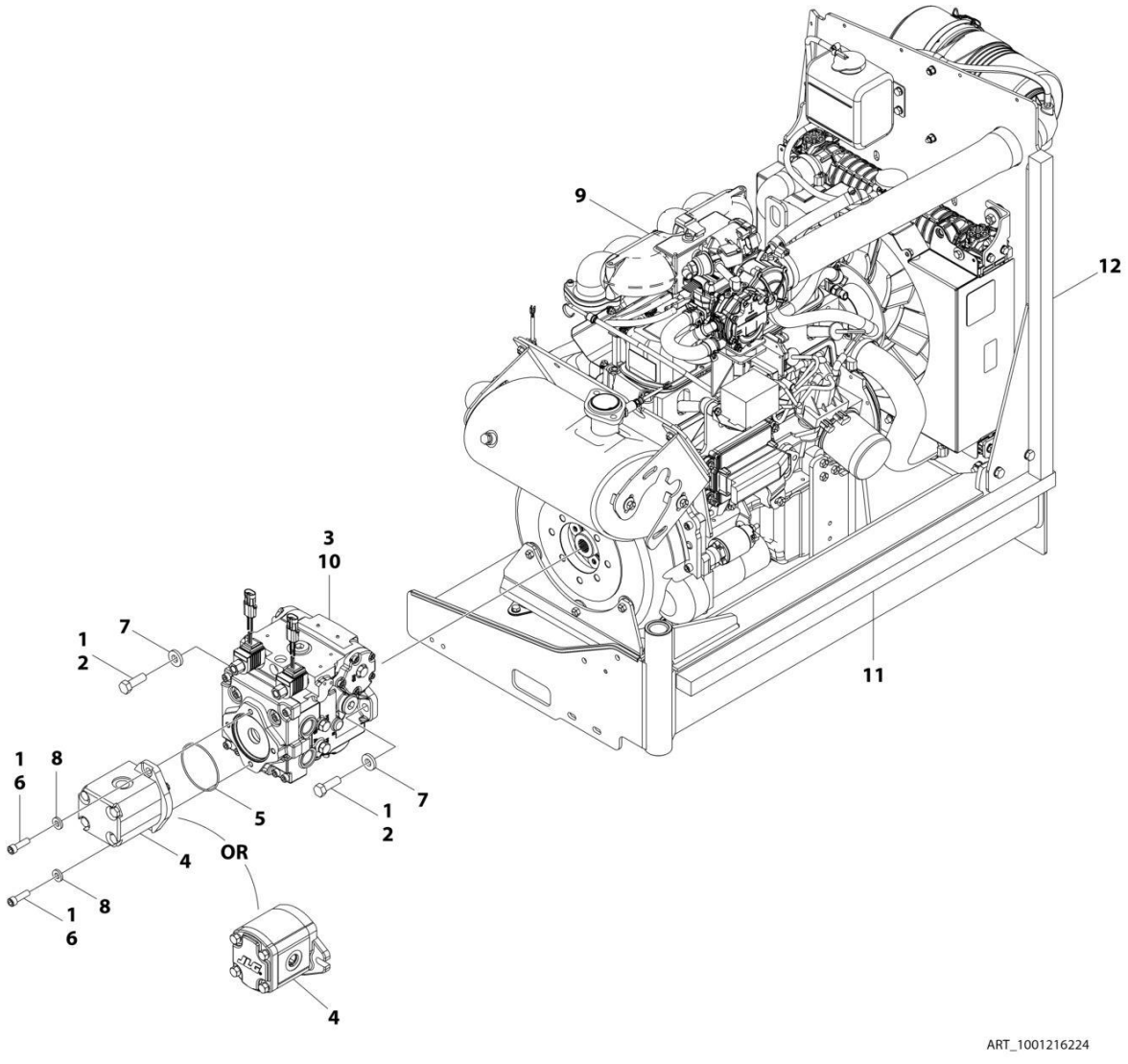

FIGURE 3-24. ENGINE AND PUMP SUB-ASSEMBLY - GM ENGINE (WITHOUT ARCTIC PACKAGE) (SN 0300222292 through 0300272360)

ITEM	PART NUMBER	QTY	DESCRIPTION	REV
	1001216224	Ref	ENGINE AND PUMP SUB-ASSEMBLY - GM ENGINE (WITHOUT ARCTIC PACKAGE)	F
1	0100011	AR	Compound, Locking	
2	0641812	2	Bolt, 1/2 x 1-1/2	
3	3020037	AR	Lube	
4	3600242	1	Gear Pump Assembly (See GEAR PUMP ASSEMBLY for Breakdown) **(SN 0300222292 through 0300237046)**	
4	1001214207	1	Gear Pump Assembly **(SN 0300237046 through 0300272360, Except SN 0300272174 through 0300272184)**	
4	70006356	1	Seal Kit - 1001214207 Pump	
5	3790152	1	O-Ring	
6	3931620	2	Capscrew, 3/8 x 1-1/4	
6	3931618	2	Capscrew, 3/8 x 1-1/8	
7	4891800	2	Washer, 1/2 Hardened	
8	4891600	2	Washer, 3/8 Hardened	
9	1001216222	1	Engine Assembly - GM Engine (Without Arctic Package) (See ENGINE ASSEMBLY - GM ENGINE (WITHOUT ARCTIC PACKAGE) for Breakdown)	
10	1001167036	1	Piston Pump Assembly (See PISTON PUMP ASSEMBLY for Breakdown)	
11	1001171953	1	Seal	
12	1001171954	1	Seal	

FIGURE 3-25. ENGINE ASSEMBLY - GM ENGINE (WITHOUT ARCTIC PACKAGE) (SN 0300203771 through 0300222291)

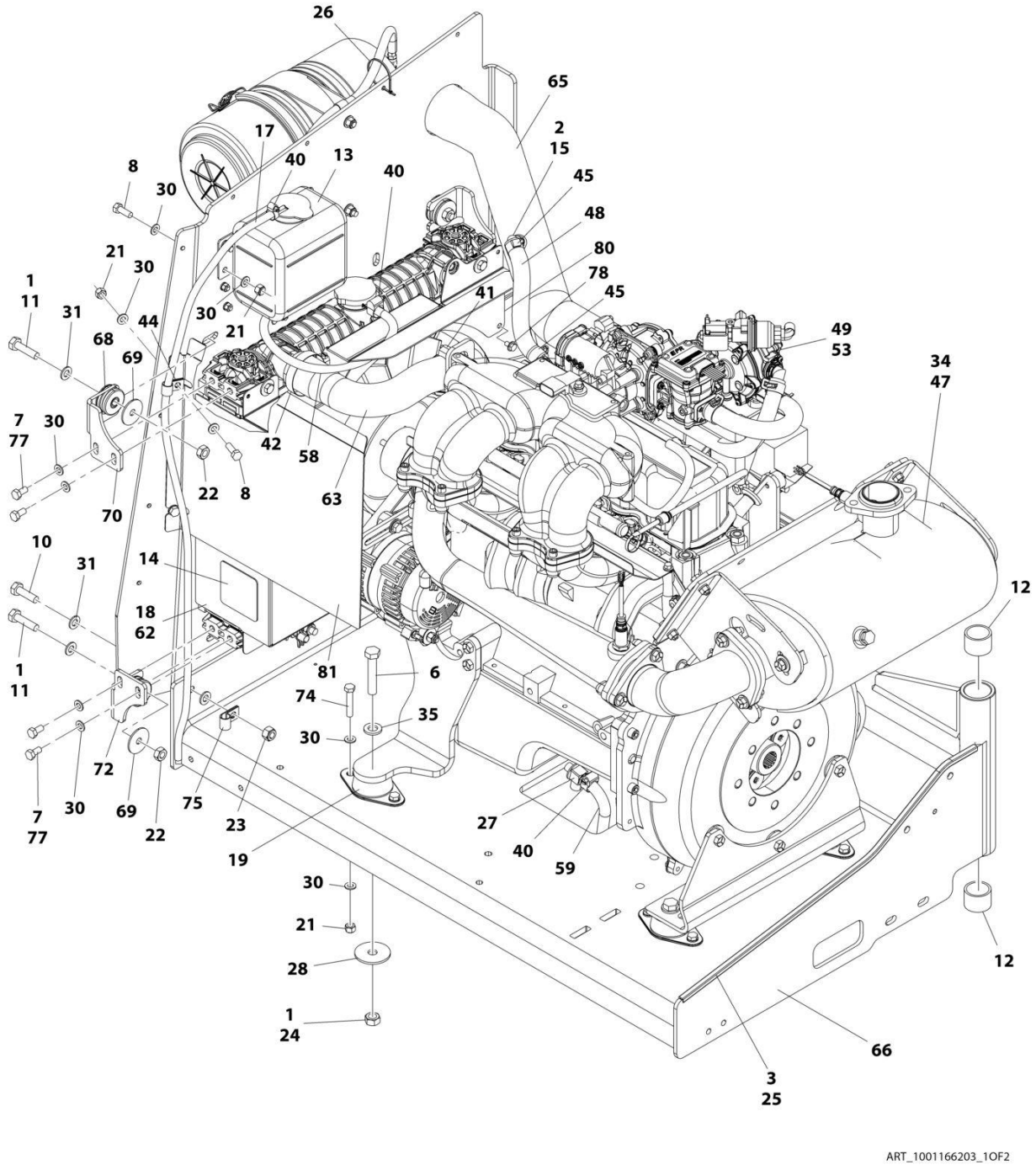

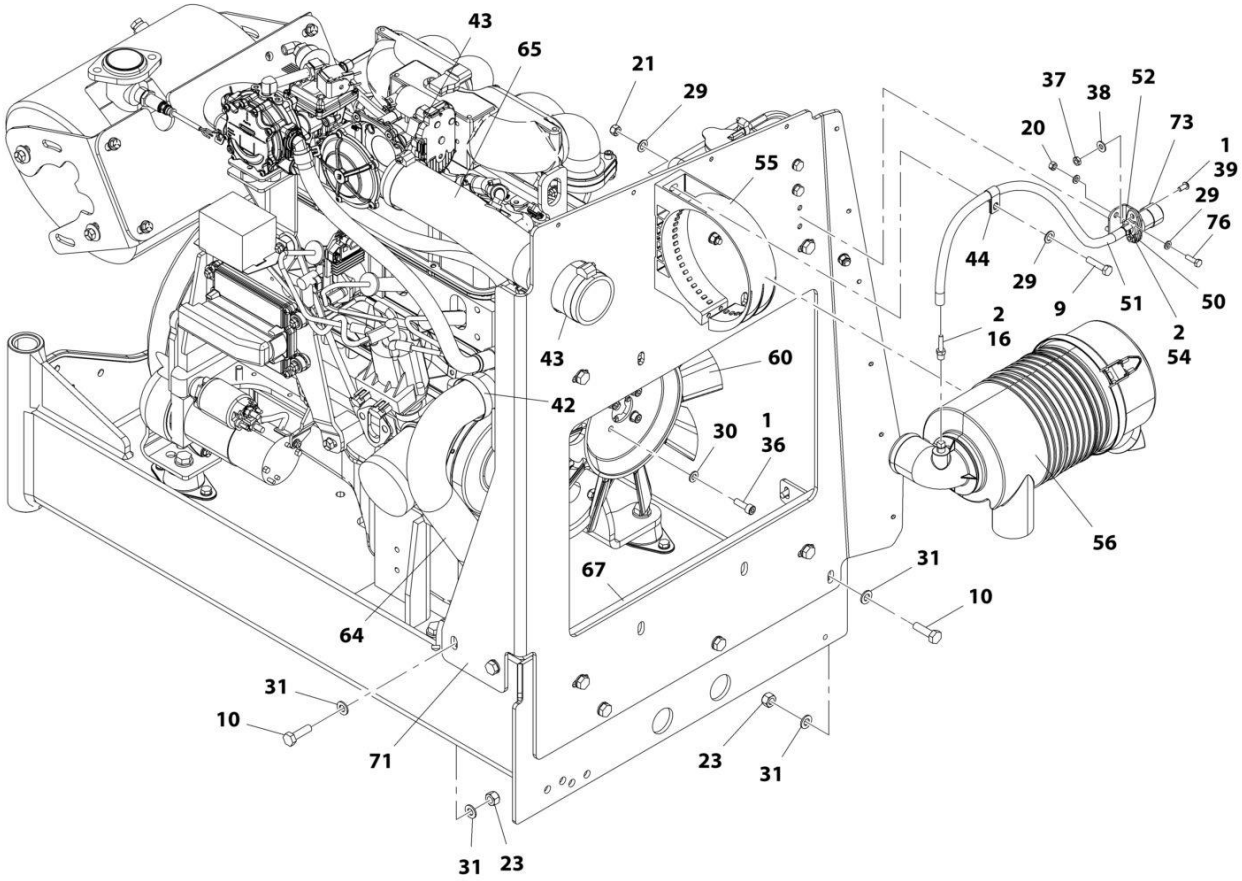

ART_1001166203_2OF2

FIGURE 3-25. ENGINE ASSEMBLY - GM ENGINE (WITHOUT ARCTIC PACKAGE) (SN 0300203771 through 0300222291)

ITEM	PART NUMBER	QTY	DESCRIPTION	REV
	1001166203	Ref	ENGINE ASSEMBLY - GM ENGINE (WITHOUT ARCTIC PACKAGE) **(SN 0300203771 through 0300222291)**	J
1	0100011	AR	Compound, Locking	
2	0100020	AR	Sealant, Pipe	
3	0100081	AR	Adhesive	
6	0711221	4	Bolt M12 x 65	
7	0760808	8	Bolt M8 x 16	
8	0760812	6	Bolt M8 x 25	
9	0760815	2	Bolt M8 x 35	
10	0761015	5	Bolt M10 x 35	
11	0761016	4	Bolt M10 x 40	
12	0961951	2	Bushing	
13	1580011	1	Container, Coolant Overflow	
14	1703162	2	Decal - Caution Fan	
15	2180877	1	Fitting, Barbed 90	
16	2220315	1	Fitting, Barbed	
17	2720271	38.5 in /97.8cm	Hose	
18	2300004	2.7 gal /10.2L	Coolant, Anti-Freeze	
19	3200406	4	Mount, Rubber	
20	3290607	2	Nut, Lock M6 x 1	
21	3290805	16	Nut, Lock M8 x 1.25	
22	3291001	4	Nut, Lock M10 x 1.5	
23	3291005	5	Nut, Lock M10 x 1.5	
24	3331211	4	Nut, Lock M12 x 1.75	
25	4060805	2.25 ft /0.69m	Trim, Flex Shield	
26	4240099	AR	Tie-Strap (Not Shown)	
27	4640952	1	Valve, Oil Drain	
28	4740274	4	Washer, Snubbing	
29	4811700	4	Washer, M6	
30	4811900	44	Washer, M8	
31	4812000	14	Washer, M10	
34	4920385	10 ft	Wire, Safety	
35	5241200	4	Washer, M12 Hardened	
36	5271809	4	Bolt M8 x 25	
37	8305401	2	Nut, Jam .250	
38	8307109	2	Washer, .250	
39	8310548	2	Screw 1/4 x 1/2	
40	8405009	4	Clamp	
41	8405103	1	Clamp	
42	8405201	3	Clamp	
43	8405203	2	Clamp	
44	8406109	2	Clip	
45	8410009	2	Clamp	
47	1001091794	1	Insulation, Muffler	
48	1001091892	8 in /20cm	Hose	
49	1001190775	4.5 qt /4.3L	Oil, Engine	

ITEM	PART NUMBER	QTY	DESCRIPTION	REV
50	1001138173	1	Support, Service Indicator	
51	1001138248	2 ft /0.61m	Hose	
52	1001138175	1	Bracket, Service Indicator	
53	1001181430	1	Engine, GM 3.0L (See GM Engine Supplement p/n 3121245 for Breakdown of Additional Components)	
53A	7027965	1	Filter, Oil	
54	1001141995	1	Fitting, Barbed	
55	1001147812	1	Clamp, Air Cleaner	
56	1001147813	1	Air Cleaner Assembly Including Filter Element	
56	70004020	1	Element, Filter (Not Shown)	
58	1001156819	14.5 in /37cm	Hose	
59	1001165035	8 in /20.3cm	Hose	
60	1001165849	1	Fan **(SN 0300203771 through 0300211991)**	
60	2060025	1	Fan **(SN 0300211991 through 0300222291)**	
62	1001167193	1	Radiator	
63	1001167382	1	Hose, Upper Radiator	
64	1001167383	1	Hose, Lower Radiator	
65	1001167384	1	Hose, Air Intake	
66	1001167895	1	Tray, Engine	
67	1001168166	2	Seal	
68	1001169054	4	Isolator, Radiator	
69	1001169138	4	Washer, Snubbing	
70	1001169967	2	Bracket	
71	1001169974	1	Plate, Radiator Mounting **(SN 0300203771 through 0300211991)**	
71	1001195714	1	Plate, Radiator Mounting **(SN 0300211991 through 0300222291)**	
72	1001170035	2	Bracket	
73	1001170981	1	Indicator	
74	0760814	8	Bolt M8 x 30	
75	8406110	1	Clip	
76	0760610	2	Bolt M6 x 20	
77	1001180620	AR	Adhesive	
78	5250605	2	Bolt M6 x 10 **(SN 0300211991 through 0300222291)**	
80	1001195699	1	Plate, Air Deflector **(SN 0300211991 through 0300222291)**	
81	1001195700	1	Plate, Air Deflector **(SN 0300211991 through 0300222291)**	

FIGURE 3-26. ENGINE ASSEMBLY - GM ENGINE (WITHOUT ARCTIC PACKAGE) (SN 0300222292 through 0300272360)

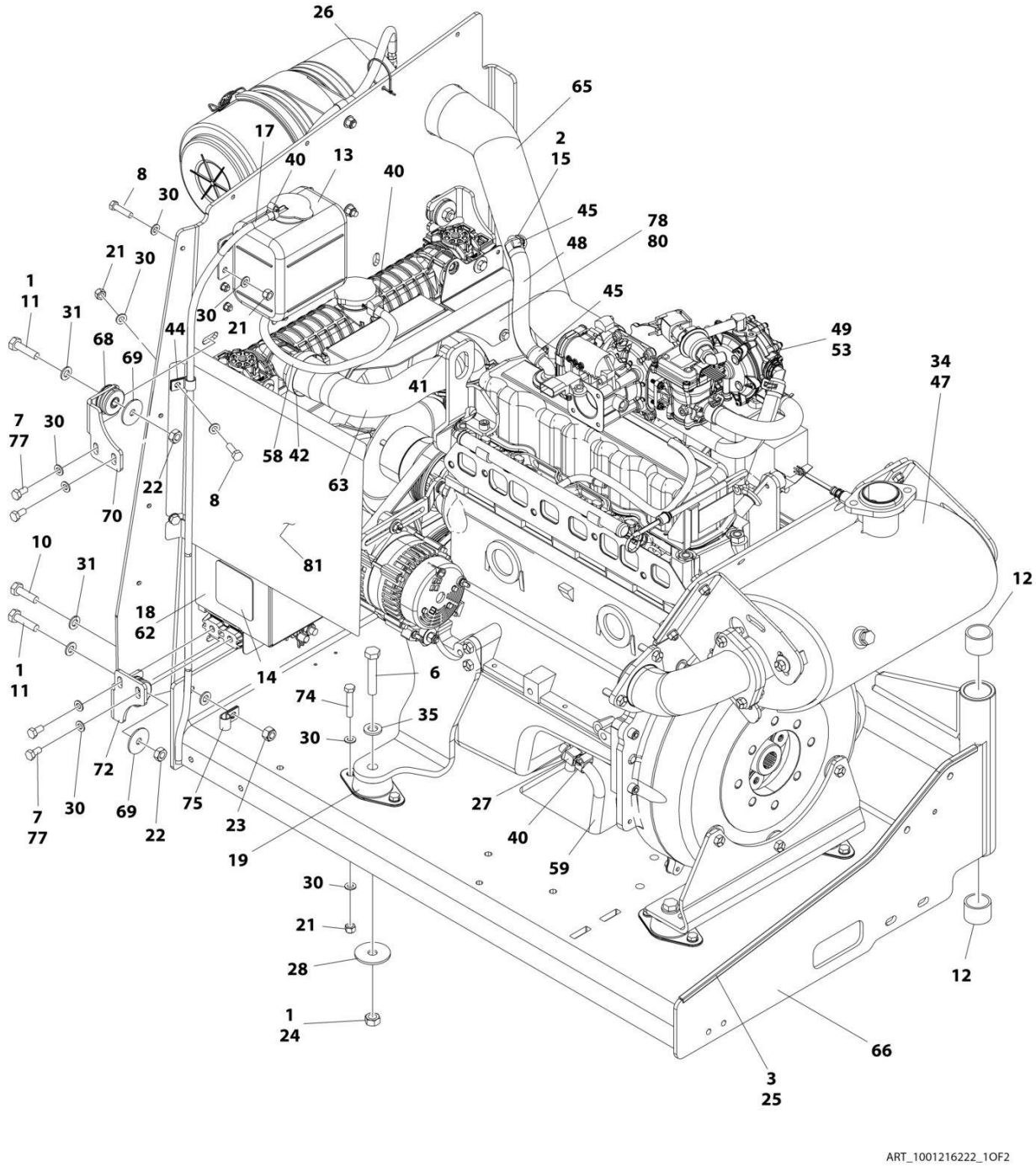

ART_1001216222_1OF2

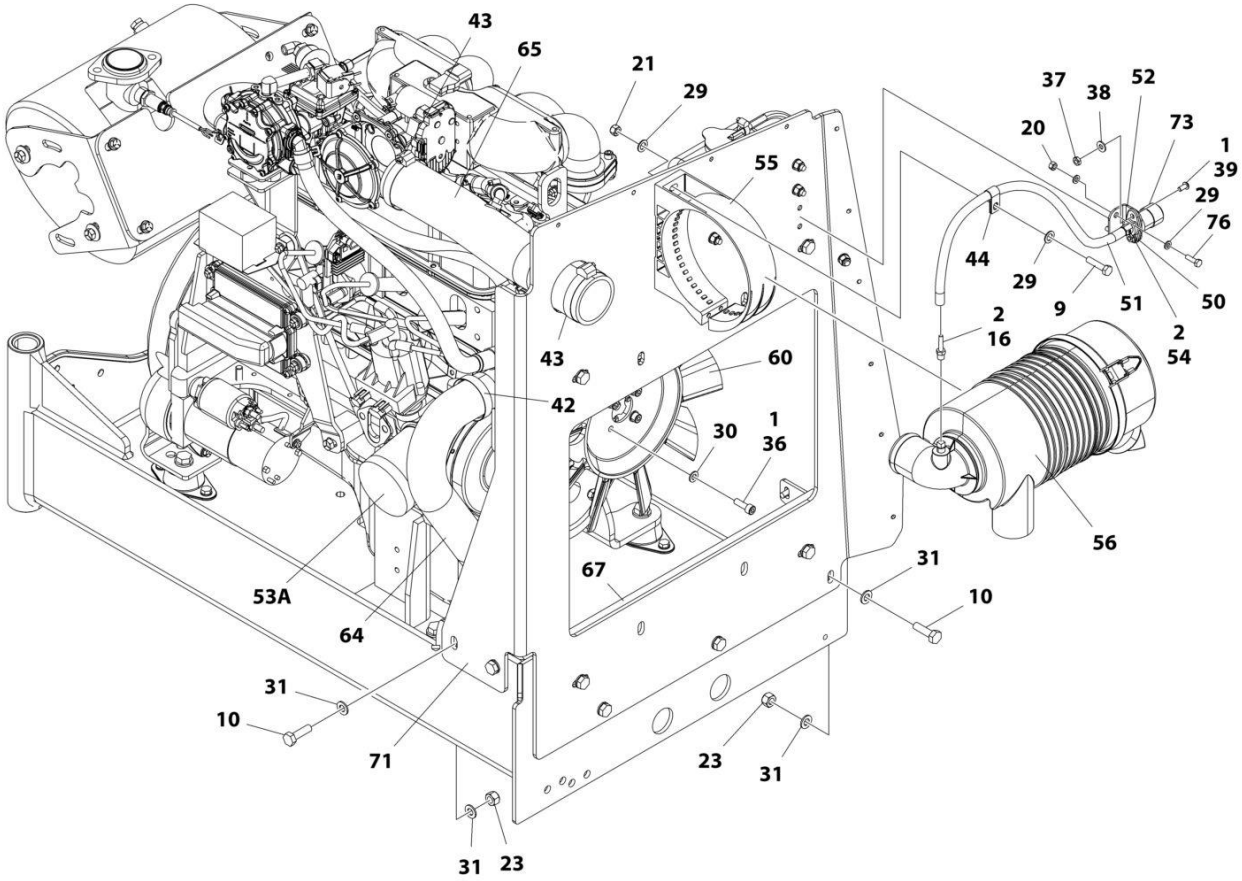

ART_1001216222_2OF2

FIGURE 3-26. ENGINE ASSEMBLY - GM ENGINE (WITHOUT ARCTIC PACKAGE) (SN 0300222292 through 0300272360)

ITEM	PART NUMBER	QTY	DESCRIPTION	REV
	1001216222	Ref	ENGINE ASSEMBLY - GM ENGINE (WITHOUT ARCTIC PACKAGE)	B
1	0100011	AR	Compound, Locking	
2	0100020	AR	Sealant, Pipe	
3	0100081	AR	Adhesive	
6	0711221	4	Bolt M12 x 65	
7	0760808	8	Bolt M8 x 16	
8	0760812	6	Bolt M8 x 25	
9	0760815	2	Bolt M8 x 35	
10	0761015	5	Bolt M10 x 35	
11	0761016	4	Bolt M10 x 40	
12	0961951	2	Bushing	
13	1580011	1	Container, Coolant Overflow	
14	1703162	2	Decal - Caution Fan	
15	2180877	1	Fitting, Barbed 90	
16	2220315	1	Fitting, Barbed	
17	2720271	38.3 in /97.5cm	Hose	
18	2300004	2.4 gal /9.1L	Coolant, Anti-Freeze	
19	3200406	4	Mount, Rubber	
20	3290607	2	Nut, Lock M6 x 1	
21	3290805	16	Nut, Lock M8 x 1.25	
22	3291001	4	Nut, Lock M10 x 1.5	
23	3291005	5	Nut, Lock M10 x 1.5	
24	3331211	4	Nut, Lock M12 x 1.75	
25	4060805	2.02 ft /0.61m	Trim, Flex Shield	
26	4240099	AR	Tie-Strap	
27	4640952	1	Valve, Oil Drain	
28	4740274	4	Washer, Snubbing	
29	4811700	4	Washer, M6	
30	4811900	44	Washer, M8	
31	4812000	14	Washer, M10	
34	4920385	10 ft/3.0m	Wire, Safety	
35	5241200	4	Washer, M12 Hardened	
36	5271809	4	Bolt M8 x 25	
37	8305401	2	Nut, Jam .250	
38	8307109	2	Washer, .250	
39	8310548	2	Screw 1/4 x 1/2	
40	8405009	4	Clamp	
41	8405103	1	Clamp	
42	8405201	3	Clamp	
43	8405203	2	Clamp	
44	8406109	2	Clip	
45	8410009	2	Clamp	
47	1001091794	1	Insulation, Muffler	
48	1001091892	7.6 in /19.4cm	Hose	
49	1001190775	4.5 qt	Oil, Engine	

ITEM	PART NUMBER	QTY	DESCRIPTION	REV
		/4.3L		
50	1001138173	1	Support, Service Indicator	
51	1001138248	1.9 ft /0.57m	Hose	
52	1001138175	1	Bracket, Service Indicator	
53	1001216219	1	Engine, GM 3.0L	
53A	7027965	1	Filter, Oil	
54	1001141995	1	Fitting, Barbed	
55	1001147812	1	Clamp, Air Cleaner	
56	1001147813	1	Air Cleaner Assembly Including Filter Element	
56	70004020	1	Element, Filter (Not Shown)	
58	1001156819	14.5 in /37cm	Hose	
59	1001165035	7.8 in /20cm	Hose	
60	2060025	1	Fan	
62	1001167193	1	Radiator	
63	1001167382	1	Hose, Upper Radiator	
64	1001167383	1	Hose, Lower Radiator	
65	1001167384	1	Hose, Air Intake	
66	1001167895	1	Tray, Engine	
67	1001168166	2	Seal	
68	1001169054	4	Isolator, Radiator	
69	1001169138	4	Washer, Snubbing	
70	1001169967	2	Bracket	
71	1001195714	1	Plate, Radiator Mounting	
72	1001170035	2	Bracket	
73	1001170981	1	Indicator	
74	0760814	8	Bolt M8 x 30	
75	8406110	1	Clip	
76	0760610	2	Bolt M6 x 20	
77	1001180620	AR	Adhesive	
78	5250605	2	Bolt M6 x 10	
80	1001195699	1	Plate, Air Deflector	
81	1001195700	1	Plate, Air Deflector	

FIGURE 3-27. ENGINE INSTALLATION - GM ENGINE (WITH ARCTIC PACKAGE) (SN 0300203771 through 0300222291)

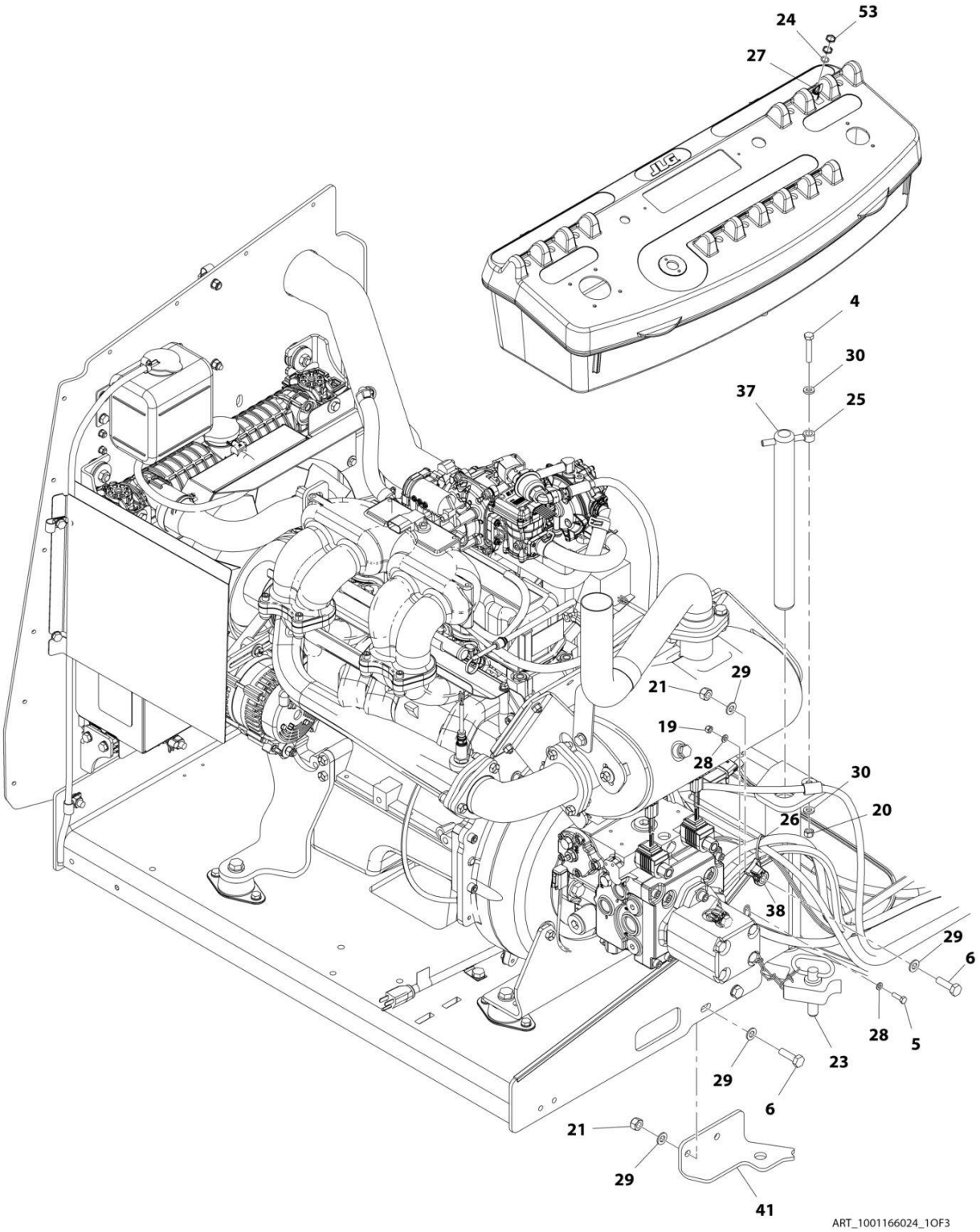

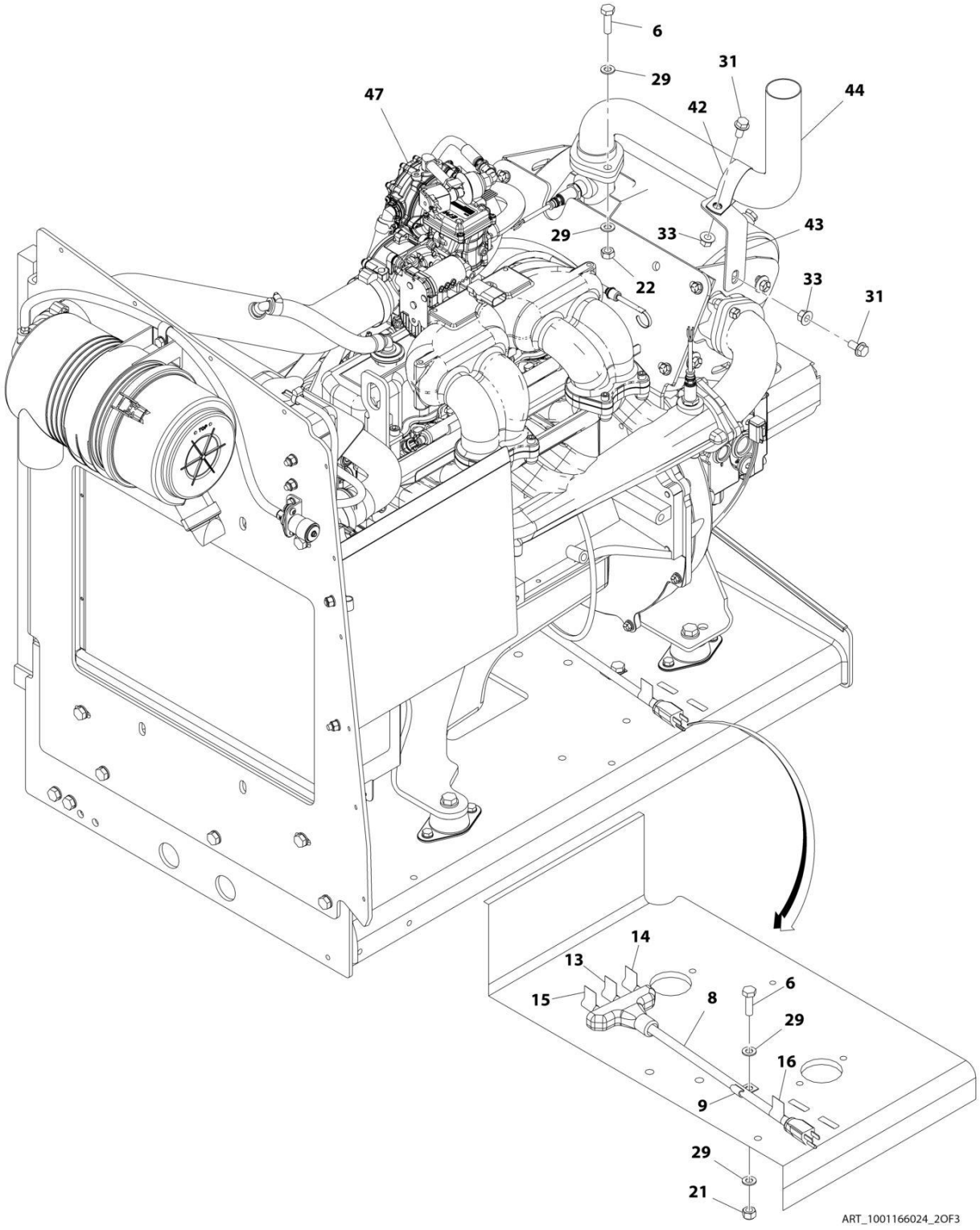
6
29
31
44
47
42
43
33
29
22
33
31
14
13
15
8
6
29
16
9
29
21
ART_1001166024_2OF3

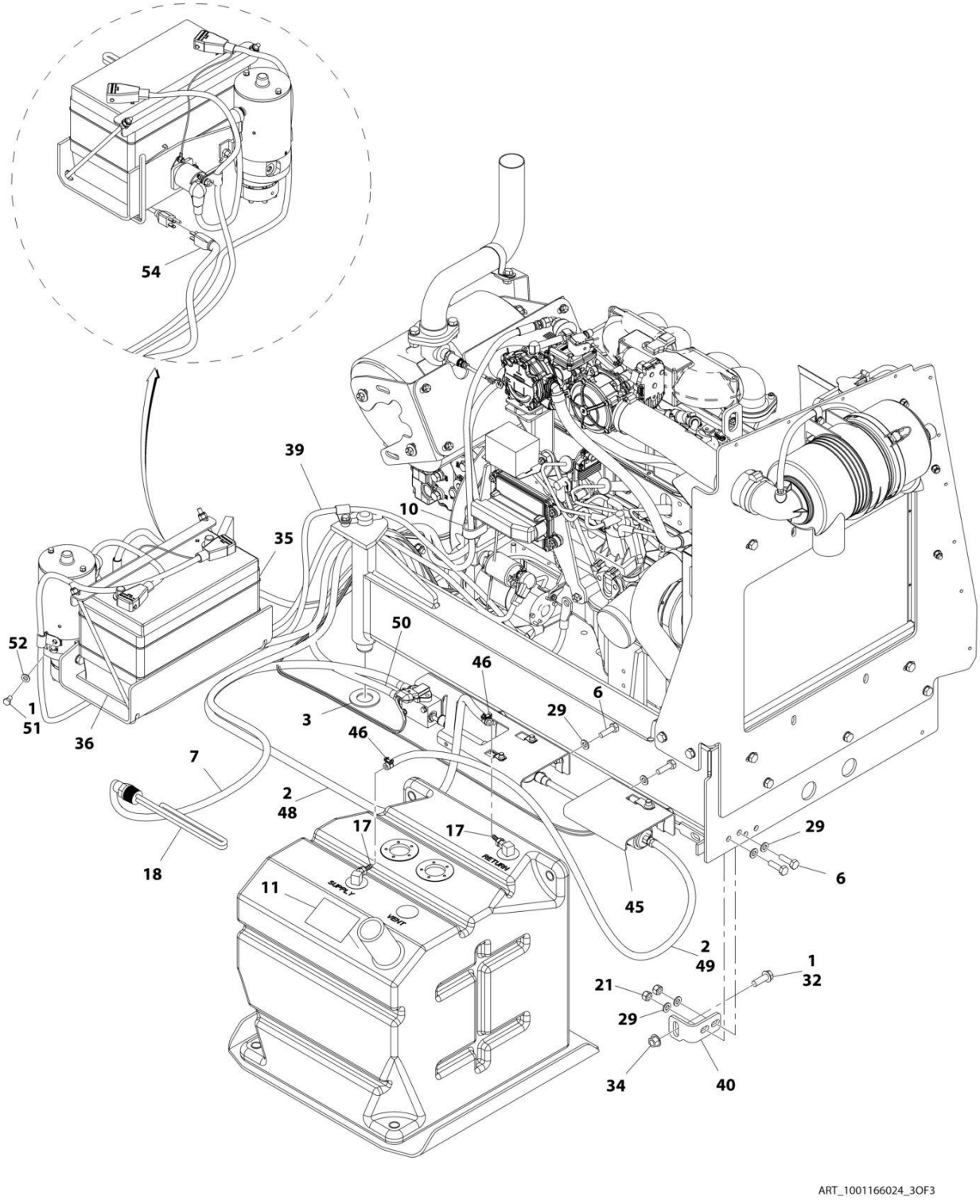
54
39
10
35
52
50
46
6
1
51
3
29
36
46
7
2
48
17
17
29
18
RETURN
6
11
SUPPLY
VENT
45
2
49
1
32
21
29
34
40
ART_1001166024_3OF3

FIGURE 3-27. ENGINE INSTALLATION - GM ENGINE (WITH ARCTIC PACKAGE) (SN 0300203771 through 0300222291)

ITEM	PART NUMBER	QTY	DESCRIPTION	REV
	1001166024	Ref	ENGINE INSTALLATION - GM ENGINE (WITH ARCTIC PACKAGE) **(SN 0300203771 through 0300222291)**	E
1	0100011	AR	Compound, Locking	
2	0100020	AR	Sealant, Pipe	
3	0440162	1	Bearing	
4	0700817	1	Bolt M8 x 45	
5	0760610	1	Bolt M6 x 20	
6	0761015	13	Bolt M10 x 35	
7	1060625	1	Cable, Immersion Heater **(SN 0300203771 through 0300208326)**	
8	1060626	1	Cord, 3 Way Extension	
9	1320223	1	Clamp	
10	1321716	1	Clamp **(SN 0300203771 through 0300214760)**	
11	1701542	1	Decal - Gas **(SN 0300203771 through 0300214760)**	
11	1701542	2	Decal - Gas **(SN 0300214761 through 0300222291)**	
12	1701543	1	Decal - LPG	
13	1702941	1	Decal - Battery Heater	
14	1702942	1	Decal - Engine Block Heater	
15	1702943	1	Decal - Hydraulic Tank Heater	
16	1702944	1	Decal - Heater Cord	
17	2180348	2	Fitting, Barbed	
18	2580050	1	Heater, Hydraulic Tank **(SN 0300203771 through 0300208326)**	
18	1001188972	1	Heater, Hydraulic Tank **(SN 0300208327 through 0300222291)**	
19	3290605	1	Nut, Lock M6 x 1	
20	3290805	1	Nut, Lock M8 x 1.25	
21	3291005	7	Nut, Lock M10 x 1.5	
22	3291007	2	Nut, Lock M10 x 1.5	
23	3422532	1	Pin	
24	3790012	1	O-Ring	
25	3841143	1	Keeper, Pin	
26	4240099	AR	Tie-Strap	
27	1001161710	1	Switch, Toggle	
28	4811700	2	Washer, M6	
29	4812000	22	Washer, M10	
30	5240800	2	Washer, M8 Hardened	
31	5251010	2	Bolt M10 x 20	
32	5251215	1	Bolt M12 x 35	
33	5261018	2	Nut, Flange M10	
34	5261200	1	Nut, Flange M12 (Grade 10.9)	
35	1001097000	1	Heater, Battery **(SN 0300203771 through 0300208326)**	
35	2580024	1	Heater, Battery **(SN 0300208327 through 0300222291)**	
36	1001119278	1	Insulate	
37	1001135196	1	Pin	
38	1001156107	2	Holder, Cable	
39	1001167039	1	Battery Cable Kit	
39	70009001	1	Cable, Battery (Black) (Battery Negative, Engine Ground, Auxiliary Power Pump to Turntable Ground)	
39	70009002	1	Cable, Battery (Red) (Auxiliary Power Relay to Auxiliary Power Pump)	
39	70009003	1	Cable, Battery (Red) (Battery Positive, Auxiliary Power Relay to Starter)	

ITEM	PART NUMBER	QTY	DESCRIPTION	REV
40	1001167512	1	Bracket, Engine Tray Stow	
41	1001169823	1	Plate, Engine Lock	
42	1001170719	1	Clamp	
43	1001172003	1	Support, Muffler	
44	1001172791	1	Pipe, Exhaust	
45	1001190920	1	Fuel System Mounting (See FUEL SYSTEM MOUNTING - GM ENGINES for Breakdown)	
46	1001174486	2	Clamp	
47	1001174781	1	Engine and Pump Sub-Assembly - GM Engine (With Arctic Package) (See ENGINE AND PUMP SUB-ASSEMBLY - GM ENGINE (WITH ARCTIC PACKAGE) for Breakdown)	
48	1001175021	1	Hose	
49	1001175022	1	Hose	
50	1001181366	1	Hose	
51	0641504	1	Bolt 5/16 x 1/2	
52	4711500	1	Washer, 5/16	
53	1001155044	2	Nut, Special 15/32-32	
54	1001159018	1	Cable, Extension Cord	

FIGURE 3-28. ENGINE INSTALLATION - GM ENGINE (WITH ARCTIC PACKAGE) (SN 0300222292 through 0300272360)

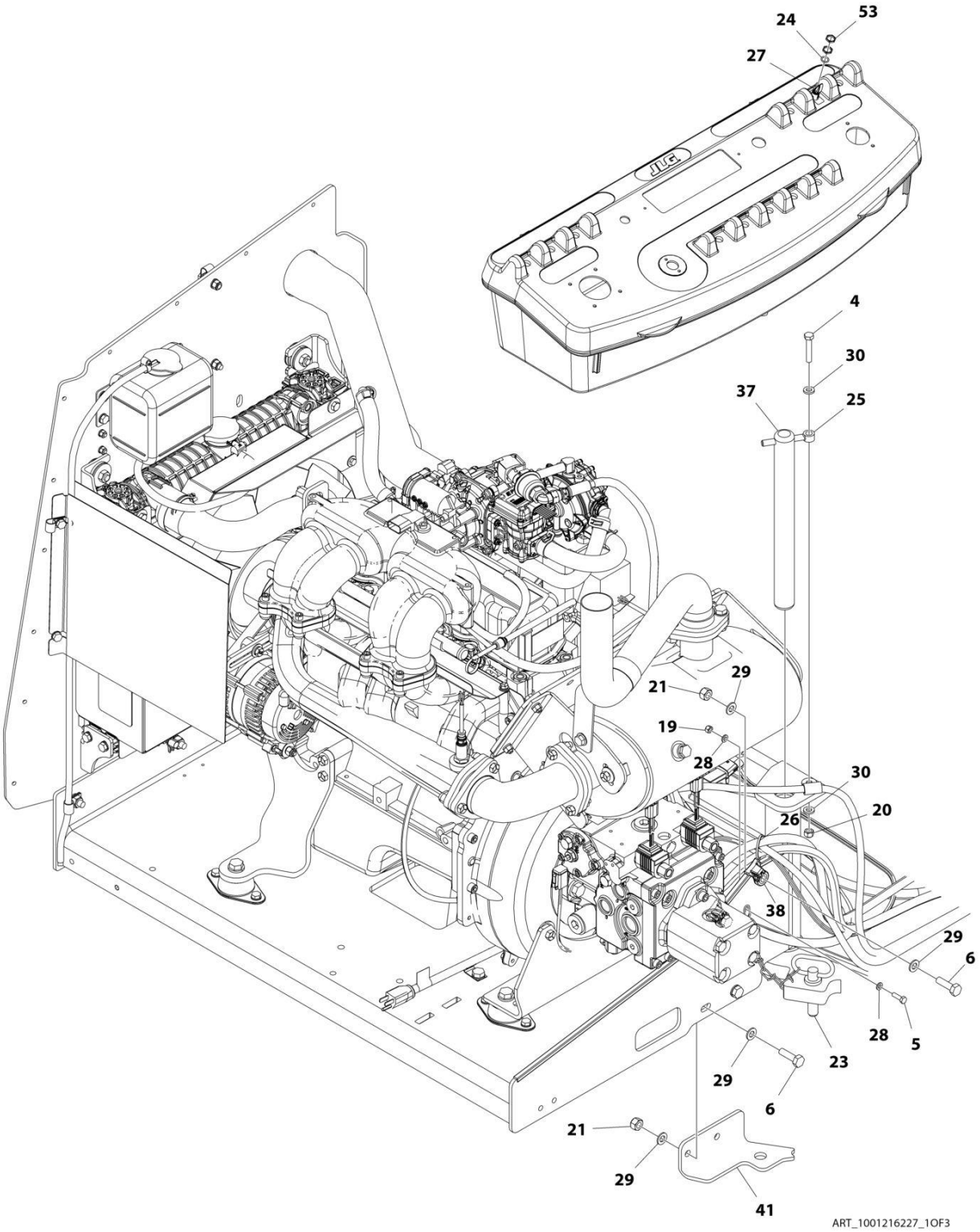

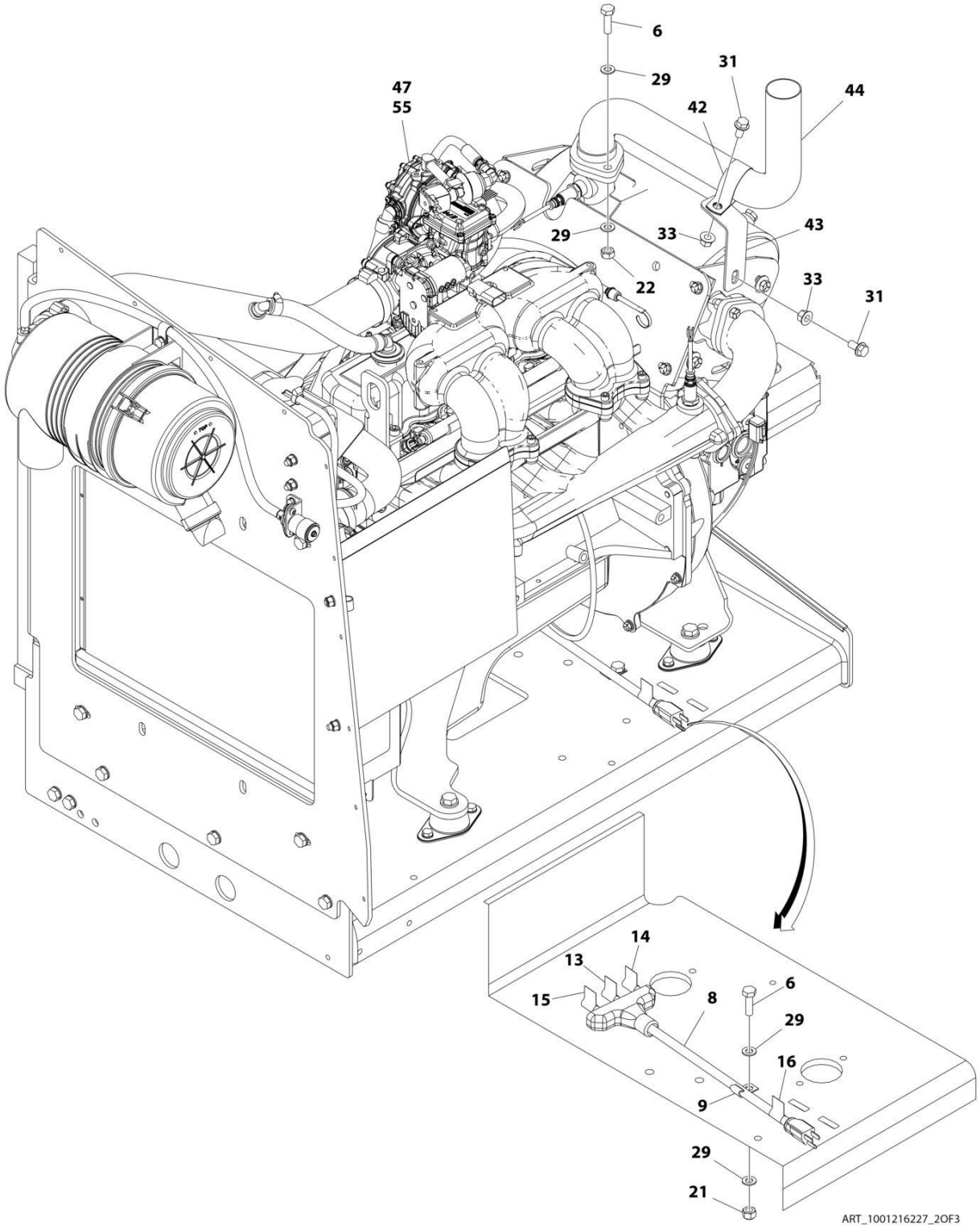
6
29
31
44
47
55
42
29
33
43
22
33
31
14
13
15
8
6
29
16
9
29
21
ART_1001216227_2OF3

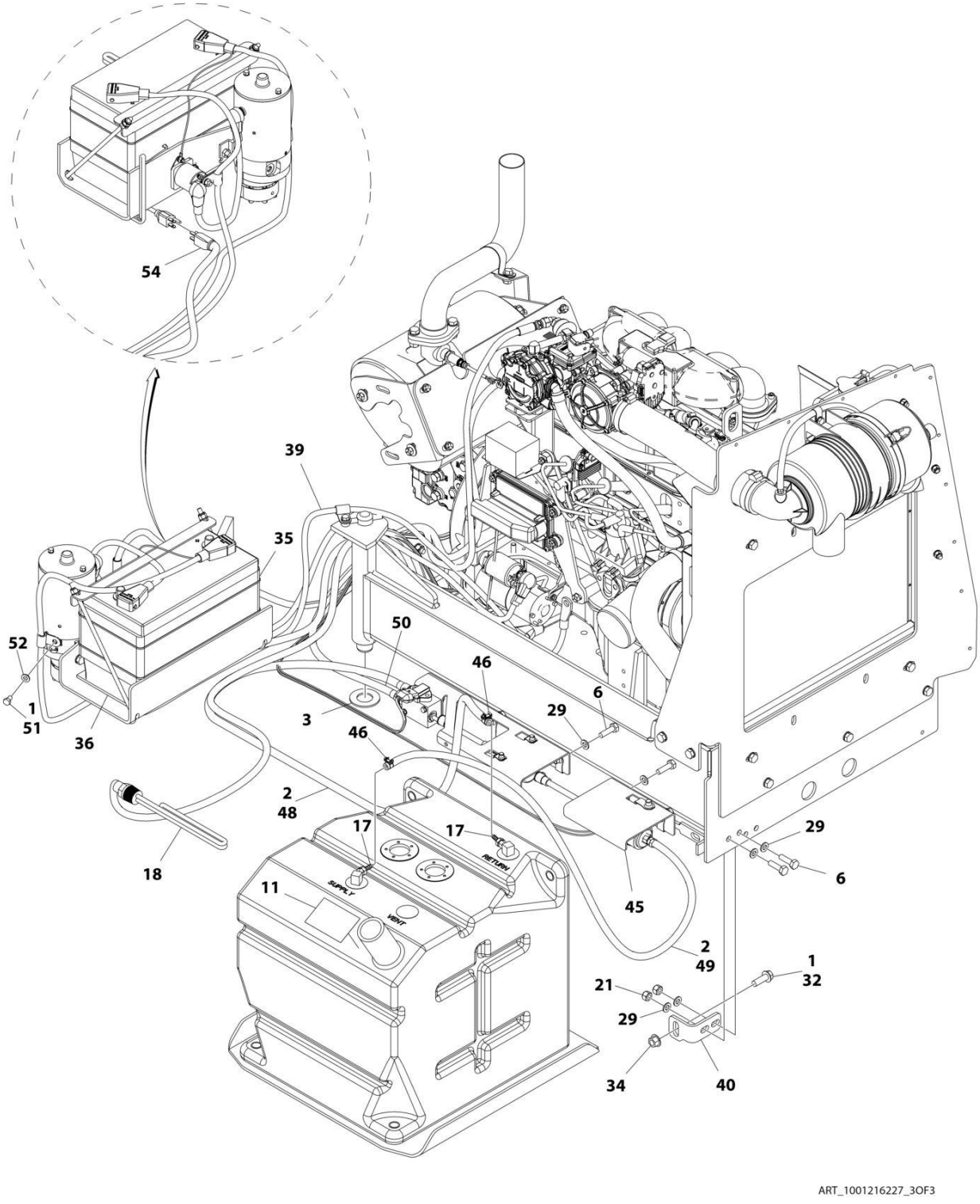
54
39
35
52
1
51
36
50
46
6
3
29
46
2
48
17
17
18
11
SUPPLY
RETURN
VENT
45
29
6
2
49
1
32
21
29
34
40
ART_1001216227_3OF3

FIGURE 3-28. ENGINE INSTALLATION - GM ENGINE (WITH ARCTIC PACKAGE) (SN 0300222292 through 0300272360)

ITEM	PART NUMBER	QTY	DESCRIPTION	REV
	1001216227	Ref	ENGINE INSTALLATION - GM ENGINE (WITH ARCTIC PACKAGE)	B
1	0100011	AR	Compound, Locking	
2	0100020	AR	Sealant, Pipe	
3	0440162	1	Bearing	
4	0700817	1	Bolt M8 x 45	
5	0760610	1	Bolt M6 x 20	
6	0761015	13	Bolt M10 x 35	
8	1060626	1	Cord, 3 Way Extension	
9	1320223	1	Clamp	
11	1701542	2	Decal - Gas	
12	1701543	1	Decal - LPG (Not Shown)	
13	1702941	1	Decal - Battery Heater	
14	1702942	1	Decal - Engine Block Heater	
15	1702943	1	Decal - Hydraulic Tank Heater	
16	1702944	1	Decal - Heater Cord	
17	2180348	2	Fitting, Barbed	
18	1001188972	1	Heater, Hydraulic Tank	
19	3290605	1	Nut, Lock M6 x 1	
20	3290805	1	Nut, Lock M8 x 1.25	
21	3291005	7	Nut, Lock M10 x 1.5	
22	3291007	2	Nut, Lock M10 x 1.5	
23	3422532	1	Pin	
24	3790012	1	O-Ring	
25	3841143	1	Keeper, Pin	
26	4240099	AR	Tie-Strap	
27	1001161710	1	Switch, Toggle	
28	4811700	2	Washer, M6	
29	4812000	22	Washer, M10	
30	5240800	2	Washer, M8 Hardened	
31	5251010	2	Bolt M10 x 20	
32	5251215	1	Bolt M12 x 35	
33	5261018	2	Nut, Flange M10	
34	5261200	1	Nut, Flange M12 (Grade 10.9)	
35	2580024	1	Heater, Battery	
36	1001119278	1	Insulate	
37	1001135196	1	Pin	
38	1001156107	2	Holder, Cable	
39	1001167039	1	Battery Cable Kit	
39	70009001	1	Cable, Battery (Black) (Battery Negative, Engine Ground, Auxiliary Power Pump to Turntable Ground)	
39	70009002	1	Cable, Battery (Red) (Auxiliary Power Relay to Auxiliary Power Pump)	
39	70009003	1	Cable, Battery (Red) (Battery Positive, Auxiliary Power Relay to Starter)	
40	1001167512	1	Bracket, Engine Tray Stow	
41	1001169823	1	Plate, Engine Lock	
42	1001170719	1	Clamp	
43	1001172003	1	Support, Muffler	
44	1001172791	1	Pipe, Exhaust	

ITEM	PART NUMBER	QTY	DESCRIPTION	REV
45	1001190920	1	Fuel System Mounting (See FUEL SYSTEM MOUNTING - GM ENGINES for Breakdown)	
46	1001174486	2	Clamp	
47	1001216225	1	Engine and Pump Sub-Assembly - GM Engine (With Arctic Package) (See ENGINE AND PUMP SUB-ASSEMBLY - GM ENGINE (WITH ARCTIC PACKAGE) for Breakdown)	
48	1001175021	1	Hose	
49	1001175022	1	Hose	
50	1001181366	1	Hose	
51	0641504	1	Bolt 5/16 x 1/2	
52	4711500	1	Washer, 5/16	
53	1001155044	2	Nut, Special 15/32-32	
54	1001150918	1	Cable, Extension Cord	
55	1001214862	1	Engine - GM Engine	

FIGURE 3-29. ENGINE AND PUMP SUB-ASSEMBLY - GM ENGINE (WITH ARCTIC PACKAGE) (SN 0300203771 through 0300222291)

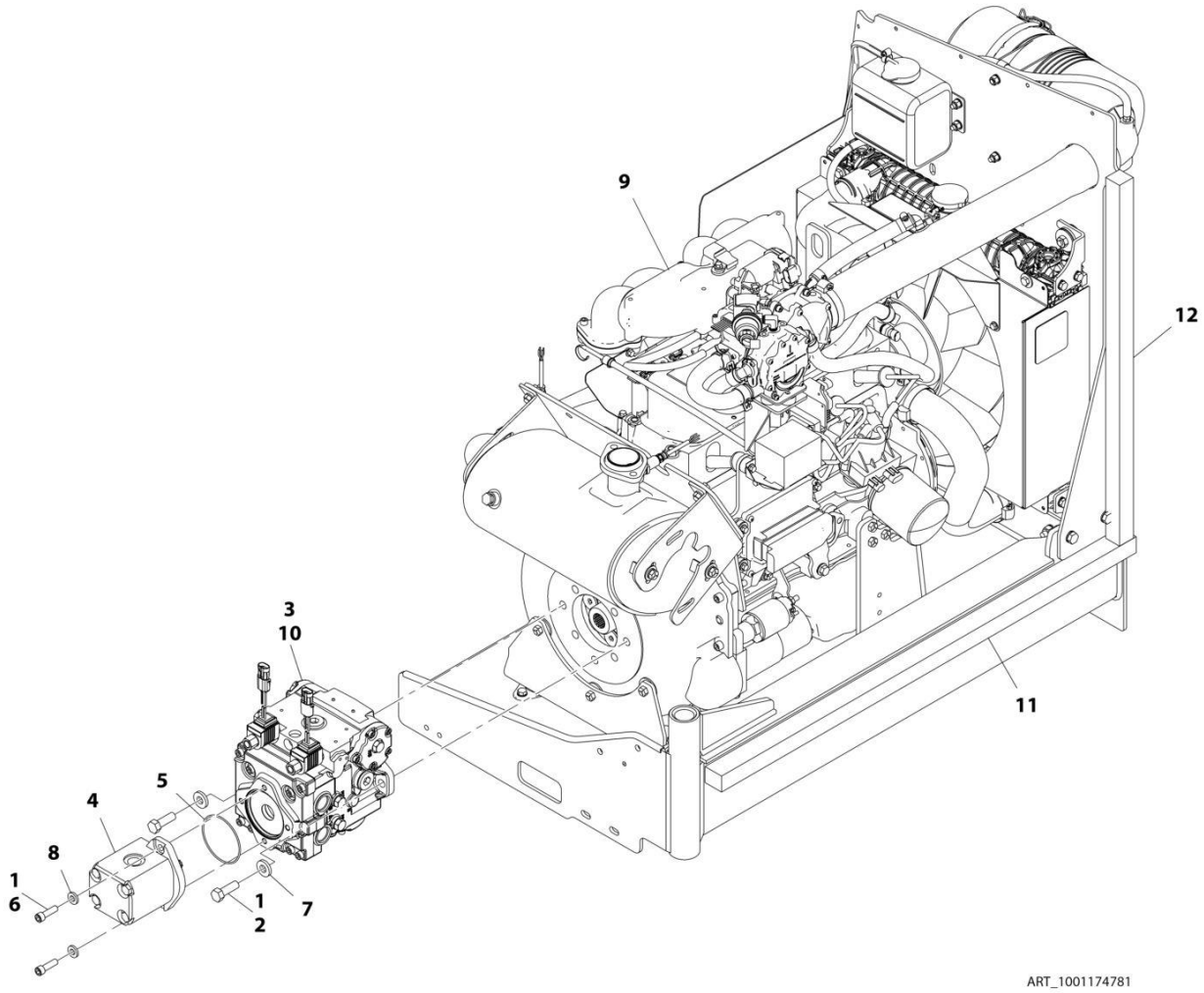

FIGURE 3-29. ENGINE AND PUMP SUB-ASSEMBLY - GM ENGINE (WITH ARCTIC PACKAGE) (SN 0300203771 through 0300222291)

ITEM	PART NUMBER	QTY	DESCRIPTION	REV
	1001174781	Ref	ENGINE AND PUMP SUB-ASSEMBLY - GM ENGINE (WITH ARCTIC PACKAGE) **(SN 0300203771 through 0300222291)**	J
1	0100011	AR	Compound, Locking	
2	0641812	2	Bolt, 1/2 x 1-1/2	
3	3020037	AR	Lube	
4	3600242	1	Gear Pump Assembly (See GEAR PUMP ASSEMBLY for Breakdown)	
5	3790152	1	O-Ring	
6	3931620	2	Capscrew, 3/8 x 1-1/4	
7	4891800	2	Washer, 1/2 Hardened	
8	4891600	2	Washer, 3/8 Hardened	
9	1001174780	1	Engine Assembly - GM Engine (With Arctic Package) (See ENGINE ASSEMBLY - GM ENGINE (WITH ARCTIC PACKAGE) for Breakdown)	
10	1001167036	1	Piston Pump Assembly (See PISTON PUMP ASSEMBLY for Breakdown)	
11	1001171953	1	Seal	
12	1001171954	1	Seal	

FIGURE 3-30. ENGINE AND PUMP SUB-ASSEMBLY - GM ENGINE (WITH ARCTIC PACKAGE) (SN 0300222292 through 0300272360)

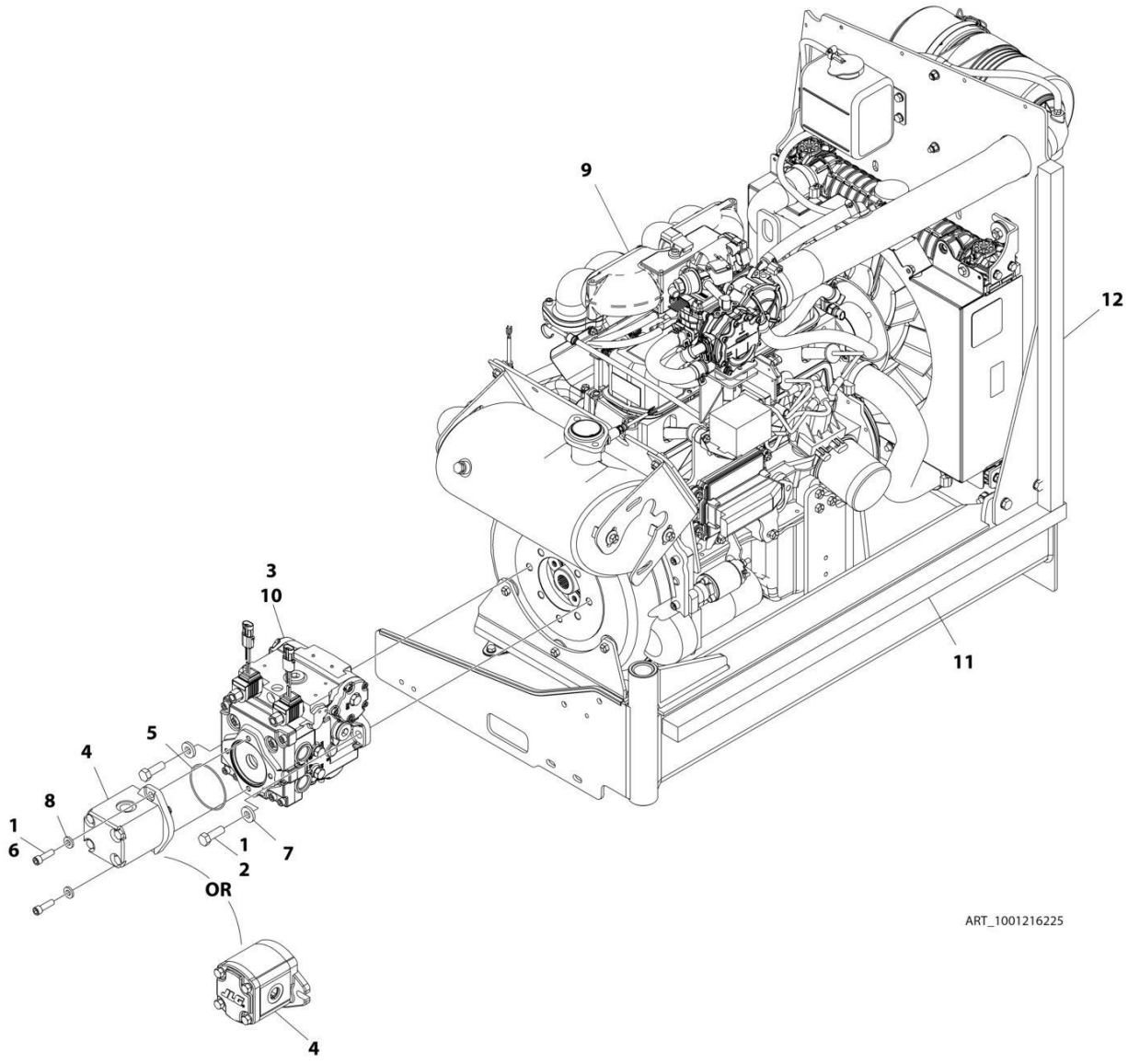

FIGURE 3-30. ENGINE AND PUMP SUB-ASSEMBLY - GM ENGINE (WITH ARCTIC PACKAGE) (SN 0300222292 through 0300272360)

ITEM	PART NUMBER	QTY	DESCRIPTION	REV
	1001216225	Ref	ENGINE AND PUMP SUB-ASSEMBLY - GM ENGINE (WITH ARCTIC PACKAGE)	F
1	0100011	AR	Compound, Locking	
2	0641812	2	Bolt, 1/2 x 1-1/2	
3	3020037	AR	Lube	
4	3600242	1	Gear Pump Assembly (See GEAR PUMP ASSEMBLY for Breakdown) **(SN 0300222292 through 0300237046)**	
4	1001214207	1	Gear Pump Assembly **(SN 0300237046 through 0300272360, Except SN 0300272174 through 0300272184)**	
4	70006356	1	Seal Kit - 1001214207 Pump	
5	3790152	1	O-Ring	
6	3931620	AR	Capscrew, 3/8 x 1-1/4	
6	3931618	AR	Capscrew, 3/8 x 1 1/8	
7	4891800	2	Washer, 1/2 Hardened	
8	4891600	2	Washer, 3/8 Hardened	
9	1001216223	1	Engine Assembly - GM Engine (With Arctic Package) (See ENGINE ASSEMBLY - GM ENGINE (WITH ARCTIC PACKAGE) for Breakdown)	
10	1001167036	1	Piston Pump Assembly (See PISTON PUMP ASSEMBLY for Breakdown)	
11	1001171953	1	Seal	
12	1001171954	1	Seal	

FIGURE 3-31. ENGINE ASSEMBLY - GM ENGINE (WITH ARCTIC PACKAGE) (SN 0300203771 through 0300222291)

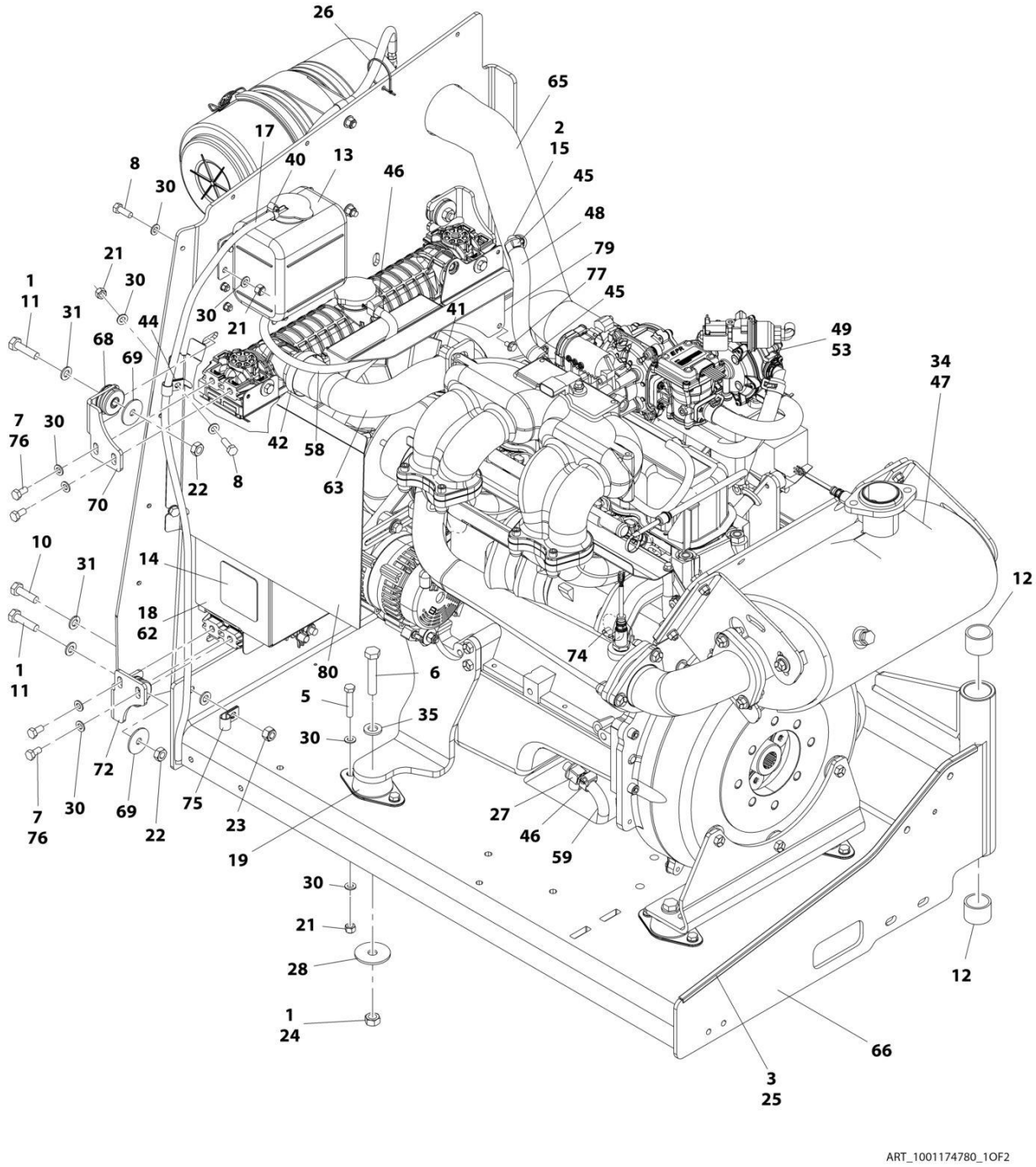

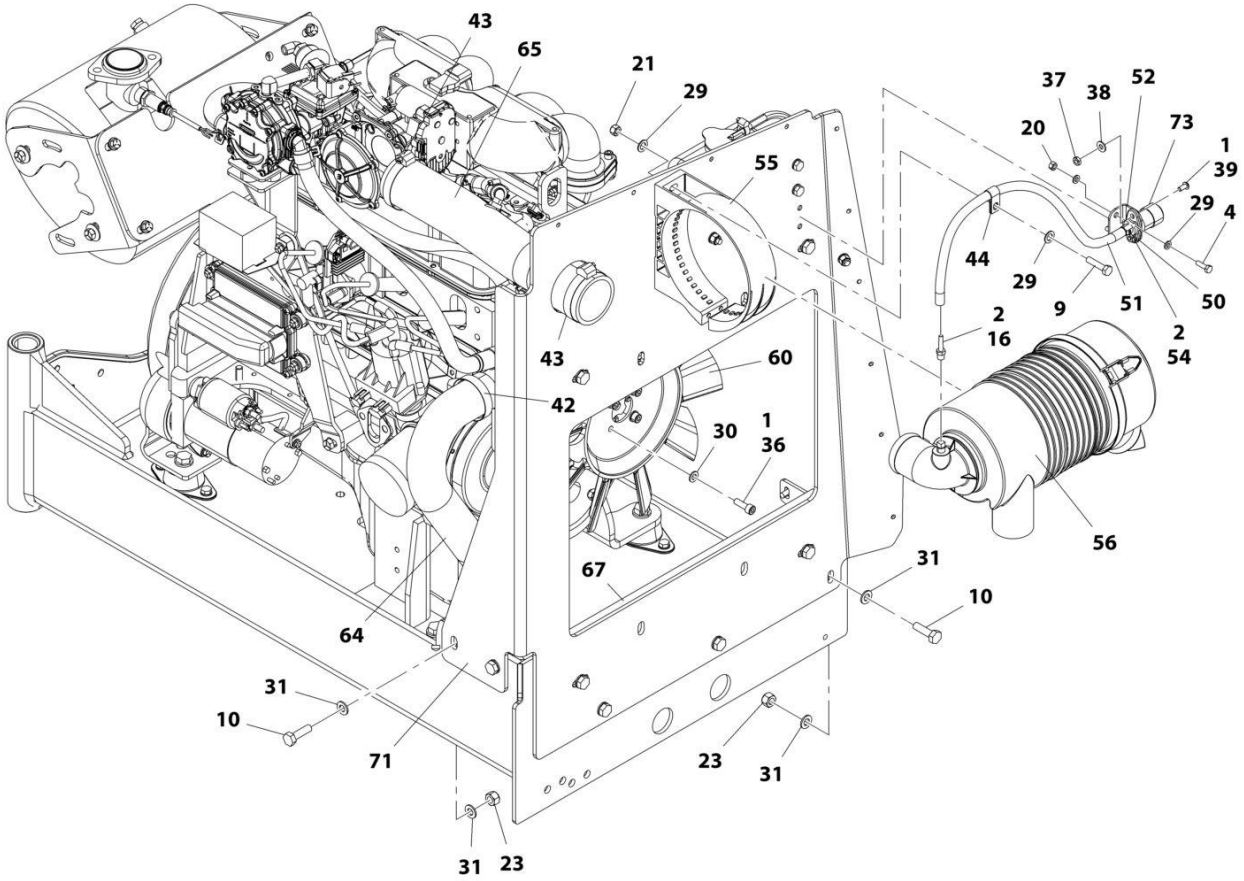

ART_1001174780_2OF2

FIGURE 3-31. ENGINE ASSEMBLY - GM ENGINE (WITH ARCTIC PACKAGE) (SN 0300203771 through 0300222291)

ITEM	PART NUMBER	QTY	DESCRIPTION	REV
	1001174780	Ref	ENGINE ASSEMBLY - GM ENGINE (WITH ARCTIC PACKAGE) **(SN 0300203771 through 0300222291)**	J
1	0100011	AR	Compound, Locking	
2	0100020	AR	Sealant, Pipe	
3	0100081	AR	Adhesive	
4	0760610	2	Bolt M6 x 20	
5	0760814	8	Bolt M8 x 30	
6	0711221	4	Bolt M12 x 65	
7	0760808	8	Bolt M8 x 16	
8	0760812	6	Bolt M8 x 25	
9	0760815	2	Bolt M8 x 35	
10	0761015	5	Bolt M10 x 35	
11	0761016	4	Bolt M10 x 40	
12	0961951	2	Bushing	
13	1580011	1	Container, Coolant Overflow	
14	1703162	2	Decal - Caution Fan	
15	2180877	1	Fitting, Elbow	
16	2220315	1	Fitting, Barbed	
17	2720271	38.5 in /97.8cm	Hose	
18	2300041	2.7 gal /10.2L	Coolant, Anti-Freeze	
19	3200406	4	Mount, Rubber	
20	3290607	2	Nut, Lock M6 x 1	
21	3290805	16	Nut, Lock M8 x 1.25	
22	3291001	4	Nut, M10 x 1.5	
23	3291005	5	Nut, Lock M10 x 1.5	
24	3331211	4	Nut, M12 x 1.75	
25	4060805	2.25 ft /0.69m	Trim, Flex Shield	
26	4240099	AR	Tie-Strap (Not Shown)	
27	4640952	1	Valve, Oil Drain	
28	4740274	4	Washer, Snubbing	
29	4811700	4	Washer, M6	
30	4811900	44	Washer, M8	
31	4812000	14	Washer, M10	
34	4920385	10 ft/3m	Wire, Safety	
35	5241200	4	Washer, M12 Hardened	
36	5271809	4	Bolt M8 x 25	
37	8305401	2	Nut, Jam .250	
38	8307109	2	Washer, .250	
39	8310548	2	Screw 1/4 x 1/2	
40	8405009	1	Clamp	
41	8405103	1	Clamp	
42	8405201	3	Clamp	
43	8405203	2	Clamp	
44	8406109	2	Clip	
45	8410009	2	Clamp	
46	8410013	3	Clamp	
47	1001091794	1	Insulation, Muffler	

ITEM	PART NUMBER	QTY	DESCRIPTION	REV
48	1001091892	8 in /20cm	Hose	
49	1001115931	4.5 qt /4.3L	Oil, Motor	
50	1001138173	1	Support, Service Indicator	
51	1001138248	2 ft /0.61m	Hose	
52	1001138175	1	Bracket, Service Indicator	
53	1001181430	1	Engine, GM 3.0L (See GM Engine Supplement p/n 3121245 for Breakdown of Additional Components) **(SN 0300203771 through 0300222291)**	
53	1001216219	1	Engine, GM 3.0L **(SN 0300222292 through 0300272360)**	
53	7027972	1	Filter, Fuel (Not Shown - Located on Tank of Machine)	
53	70002895	1	Module, ECU	
53A	7027965	1	Filter, Oil	
54	1001141995	1	Fitting, Barbed	
55	1001147812	1	Clamp, Air Cleaner	
56	1001147813	1	Air Cleaner Assembly Including Filter Element	
56	70004020	1	Element, Filter (Not Shown)	
58	1001156819	14.5 in /37cm	Hose	
59	1001165035	8 in /20.3cm	Hose	
60	1001165849	1	Fan **(SN 0300203771 through 0300211991)**	
60	2060025	1	Fan **(SN 0300211991 through 0300272360)**	
62	1001167193	1	Radiator	
63	1001167382	1	Hose, Upper Radiator	
64	1001167383	1	Hose, Lower Radiator	
65	1001167384	1	Hose, Air Intake	
66	1001167895	1	Tray, Engine	
67	1001168166	2	Seal	
68	1001169054	4	Isolator, Radiator	
69	1001169138	4	Washer, Snubbing	
70	1001169967	2	Bracket	
71	1001169974	1	Plate, Radiator Mounting **(SN 0300203771 through 0300211991)**	
71	1001195714	1	Plate, Radiator Mounting **(SN 0300211991 through 0300272360)**	
72	1001170035	2	Bracket	
73	1001170981	1	Indicator	
74	2580063	1	Heater, Engine Block	
75	8406110	1	Clip	
76	1001180620	AR	Adhesive	
77	5250605	2	Bolt M6 x 10 **(SN 0300211991 through 0300272360)**	
79	1001195699	1	Plate, Air Deflector **(SN 0300211991 through 0300272360)**	
80	1001195700	1	Plate, Air Deflector **(SN 0300211991 through 0300272360)**	

FIGURE 3-32. ENGINE ASSEMBLY - GM ENGINE (WITH ARCTIC PACKAGE) (SN 0300222292 through 0300272360)

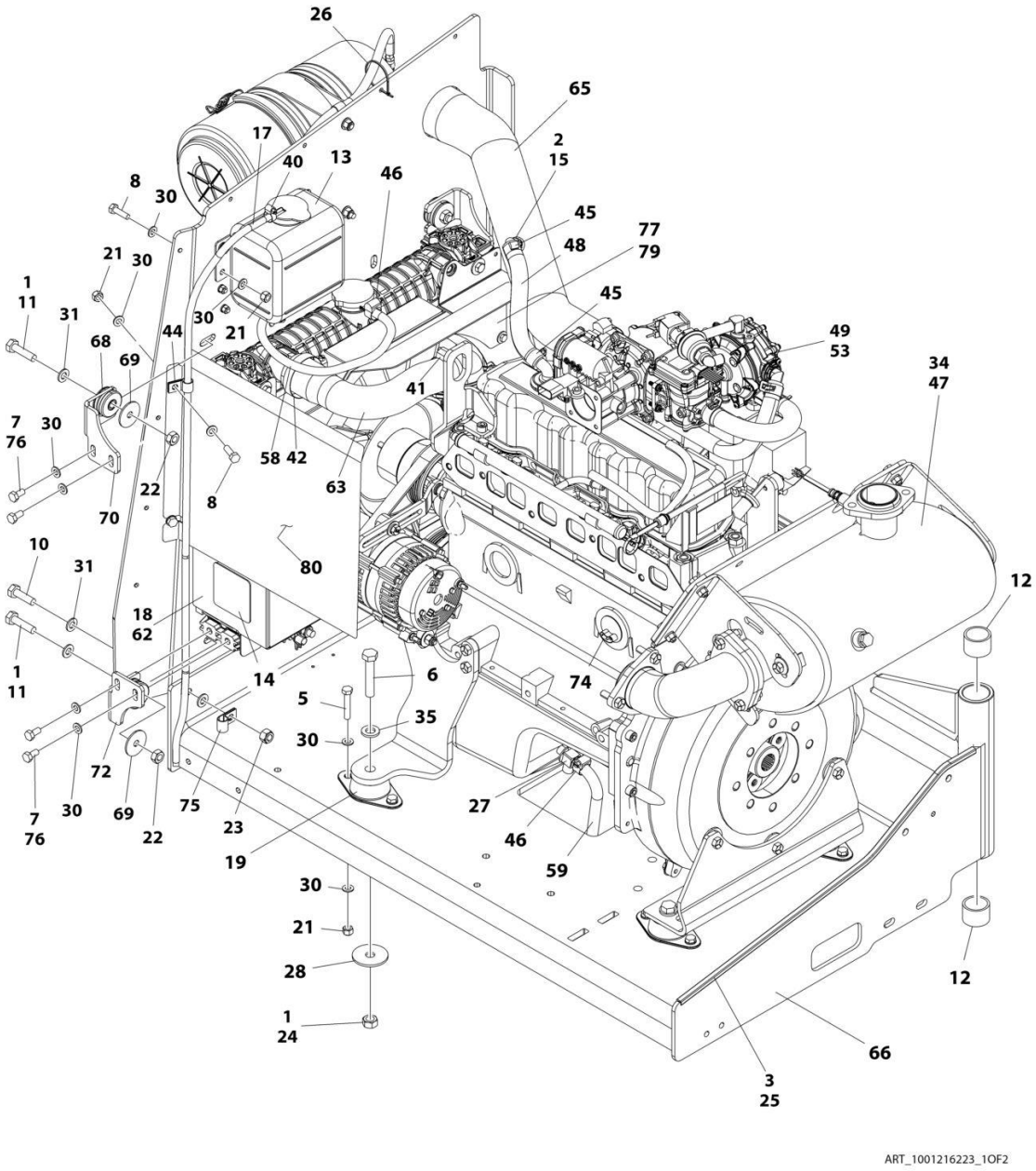

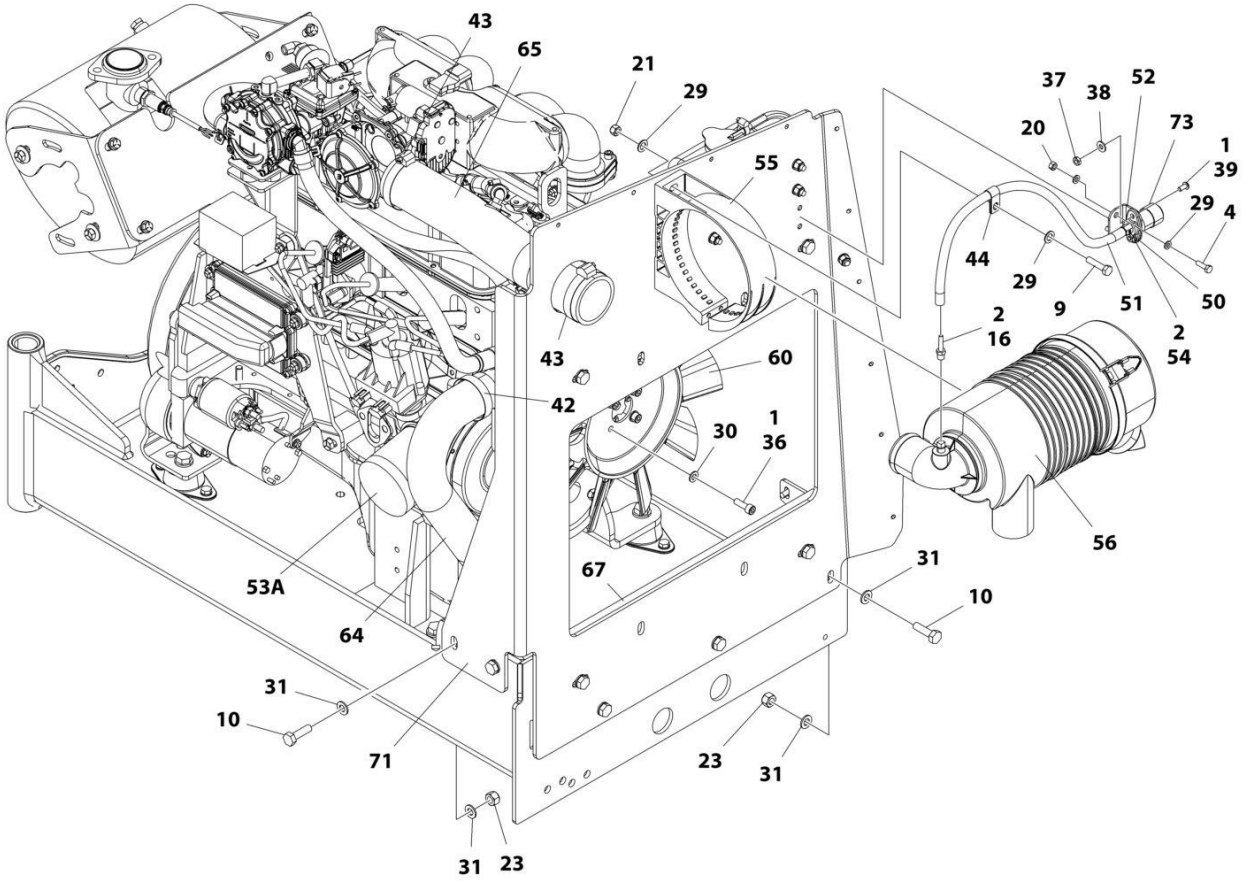

ART_1001216223_2OF2

FIGURE 3-32. ENGINE ASSEMBLY - GM ENGINE (WITH ARCTIC PACKAGE) (SN 0300222292 through 0300272360)

ITEM	PART NUMBER	QTY	DESCRIPTION	REV
	1001216223	Ref	ENGINE ASSEMBLY - GM ENGINE (WITH ARCTIC PACKAGE)	B
1	0100011	AR	Compound, Locking	
2	0100020	AR	Sealant, Pipe	
3	0100081	AR	Adhesive	
4	0760610	2	Bolt M6 x 20	
5	0760814	8	Bolt M8 x 30	
6	0711221	4	Bolt M12 x 65	
7	0760808	8	Bolt M8 x 16	
8	0760812	6	Bolt M8 x 25	
9	0760815	2	Bolt M8 x 35	
10	0761015	5	Bolt M10 x 35	
11	0761016	4	Bolt M10 x 40	
12	0961951	2	Bushing	
13	1580011	1	Container, Coolant Overflow	
14	1703162	2	Decal - Caution Fan	
15	2180877	1	Fitting, Elbow	
16	2220315	1	Fitting, Barbed	
17	2720271	31.2 in /97.5cm	Hose	
18	2300041	2.0 gal /9.1L	Coolant, Anti-Freeze	
19	3200406	4	Mount, Rubber	
20	3290607	2	Nut, Lock M6 x 1	
21	3290805	16	Nut, Lock M8 x 1.25	
22	3291001	4	Nut, M10 x 1.5	
23	3291005	5	Nut, Lock M10 x 1.5	
24	3331211	4	Nut, M12 x 1.75	
25	4060805	2 ft /0.61m	Trim, Flex Shield	
26	4240099	AR	Tie-Strap	
27	4640952	1	Valve, Oil Drain	
28	4740274	4	Washer, Snubbing	
29	4811700	4	Washer, M6	
30	4811900	44	Washer, M8	
31	4812000	14	Washer, M10	
34	4920385	10 ft/3m	Wire, Safety	
35	5241200	4	Washer, M12 Hardened	
36	5271809	4	Bolt M8 x 25	
37	8305401	2	Nut, Jam .250	
38	8307109	2	Washer, .250	
39	8310548	2	Screw 1/4 x 1/2	
40	8405009	1	Clamp	
41	8405103	1	Clamp	
42	8405201	3	Clamp	
43	8405203	2	Clamp	
44	8406109	2	Clip	
45	8410009	2	Clamp	
46	8410013	3	Clamp	
47	1001091794	1	Insulation, Muffler	

ITEM	PART NUMBER	QTY	DESCRIPTION	REV
48	1001091892	7.6 in /19.4cm	Hose	
49	1001115931	4.5 qt /4.3L	Oil, Motor	
50	1001138173	1	Support, Service Indicator	
51	1001138248	1.9 ft /0.58m	Hose	
52	1001138175	1	Bracket, Service Indicator	
53	1001216219	1	Engine, GM 3.0L	
53	7027972	1	Filter, Fuel (Not Shown - Located on Tank of Machine)	
53	70002895	1	Module, ECU	
53A	7027965	1	Filter, Oil	
54	1001141995	1	Fitting, Barbed	
55	1001147812	1	Clamp, Air Cleaner	
56	1001147813	1	Air Cleaner Assembly Including Filter Element	
58	1001156819	8 in /20.3cm	Hose	
59	1001165035	7.8 in /20cm	Hose	
60	2060025	1	Fan	
62	1001167193	1	Radiator	
63	1001167382	1	Hose, Upper Radiator	
64	1001167383	1	Hose, Lower Radiator	
65	1001167384	1	Hose, Air Intake	
66	1001167895	1	Tray, Engine	
67	1001168166	2	Seal	
68	1001169054	4	Isolator, Radiator	
69	1001169138	4	Washer, Snubbing	
70	1001169967	2	Bracket	
71	1001195714	1	Plate, Radiator Mounting	
72	1001170035	2	Bracket	
73	1001170981	1	Indicator	
74	2580063	1	Heater, Engine Block	
75	8406110	1	Clip	
76	1001180620	AR	Adhesive	
77	5250605	2	Bolt M6 x 10	
79	1001195699	1	Plate, Air Deflector	
80	1001195700	1	Plate, Air Deflector	

FIGURE 3-33. FUEL SYSTEM MOUNTING - GM ENGINES

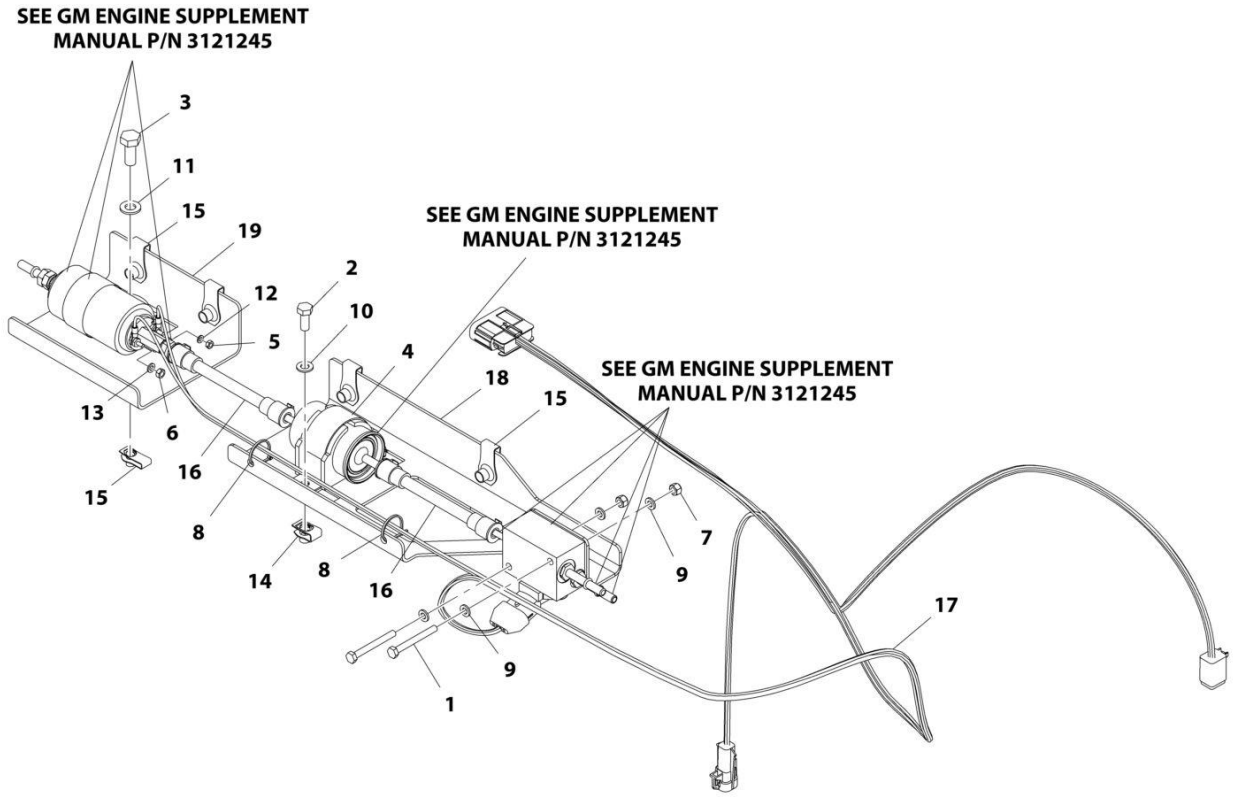

FIGURE 3-33. FUEL SYSTEM MOUNTING - GM ENGINES

ITEM	PART NUMBER	QTY	DESCRIPTION	REV
	1001190920	Ref	FUEL SYSTEM MOUNTING - GM ENGINES	B
1	0700619	2	Bolt M6 x 55	
2	0760810	2	Bolt M8 x 20	
3	0761012	1	Bolt M10 x 25	
4	1320323	1	Clamp	
5	3290401	1	Nut, M4 x 0.7	
6	3290501	1	Nut, M5 x 0.8	
7	3290605	2	Nut, Lock M6 x 1	
8	4240099	1	Tie-Strap	
9	4811700	4	Washer, M6	
10	4811900	2	Washer, M8	
11	4812000	1	Washer, M10	
12	4831400	1	Washer, Lock M4	
13	4831600	1	Washer, Lock M5	
14	1001118274	2	Nut, Special M8 x 1.25	
15	1001118972	5	Nut, Special M10 x 1.5	
16	1001156823	2	Hose	
17	1001167112	1	Harness Engine (See ELECTRICAL SECTION for Breakdown)	
18	1001190919	1	Plate	
19	1001190918	1	Plate	

FIGURE 3-34. ENGINE INSTALLATION - KUBOTA ENGINE (WITHOUT ARCTIC PACKAGE) (SN 0300203771 through 0300241777)

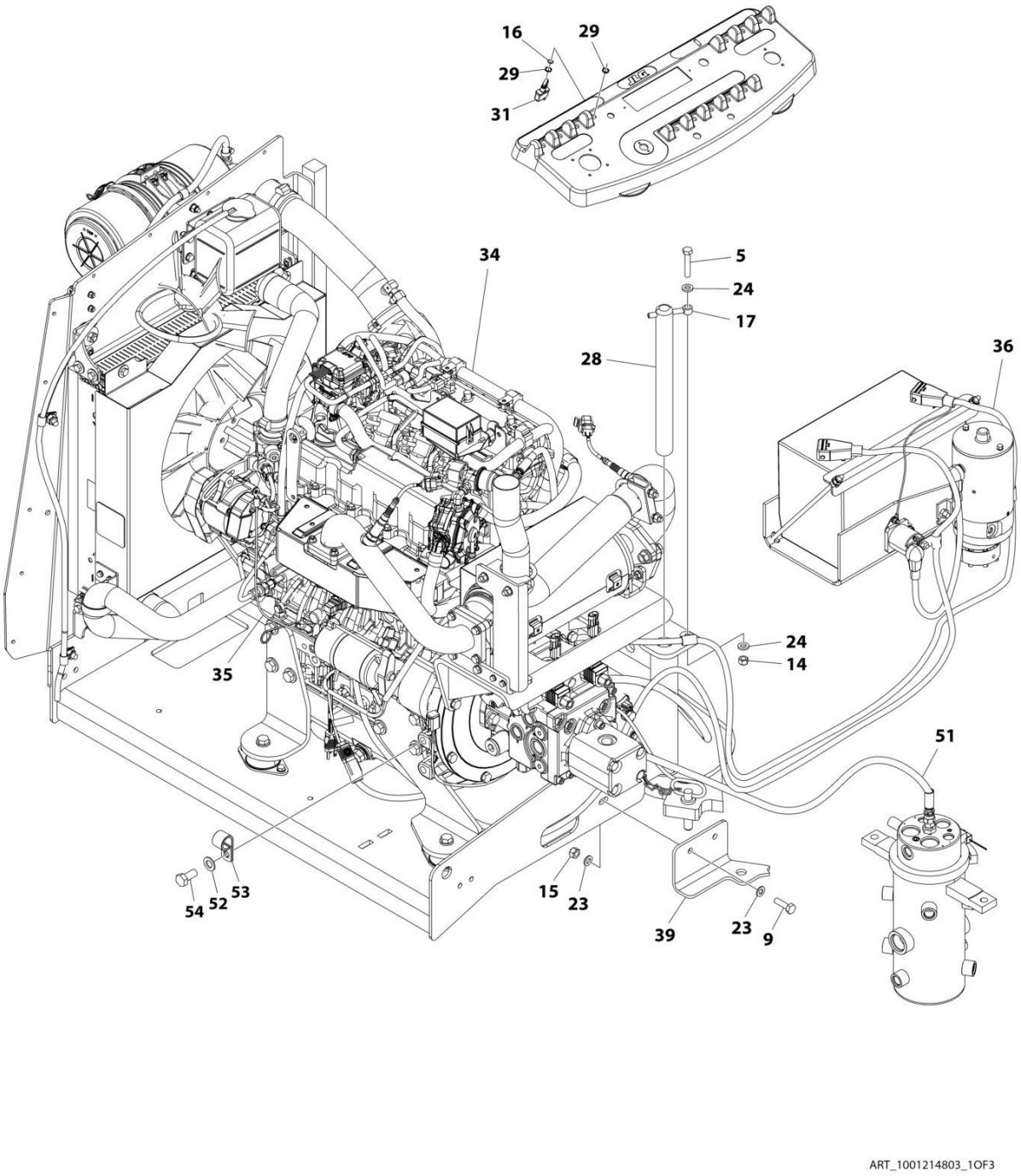

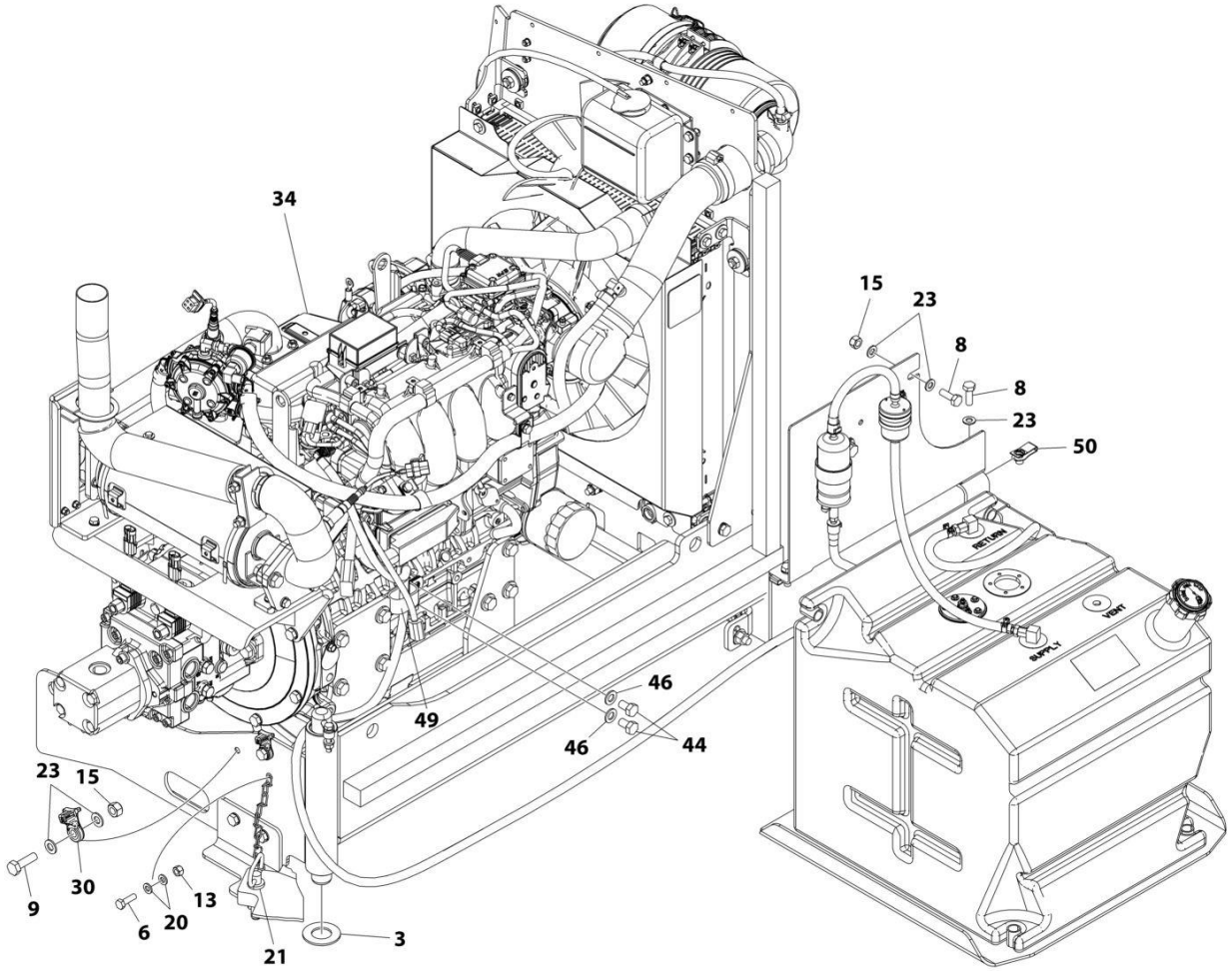

ART_1001214803_2OF3

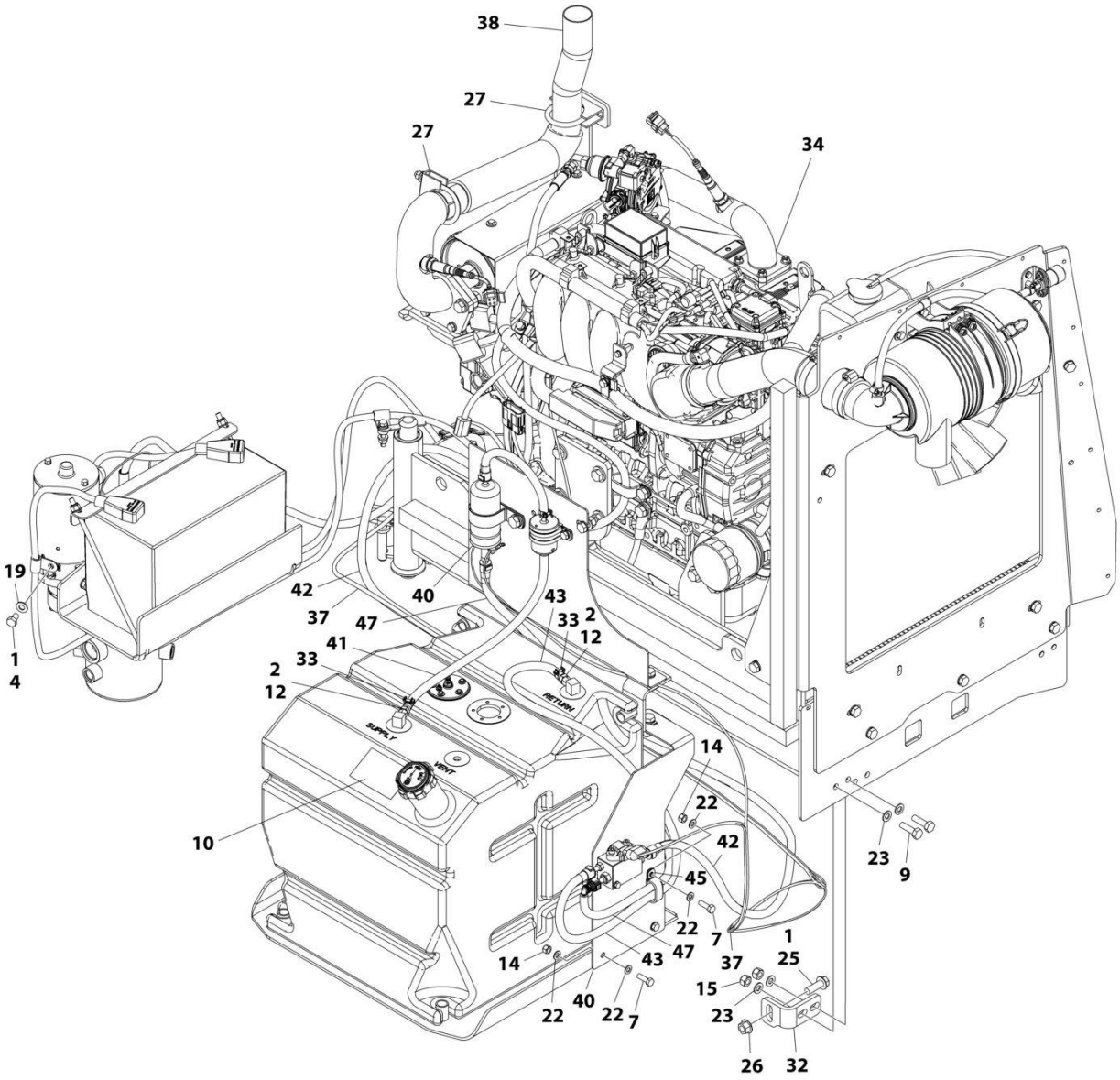

ART_1001214803_3OF3

FIGURE 3-34. ENGINE INSTALLATION - KUBOTA ENGINE (WITHOUT ARCTIC PACKAGE) (SN 0300203771 through 0300241777)

ITEM	PART NUMBER	QTY	DESCRIPTION	REV
	1001214803	Ref	ENGINE INSTALLATION - KUBOTA ENGINE (WITHOUT ARCTIC PACKAGE)	G
1	0100011	AR	Compound, Locking	
2	0100020	AR	Sealant, Pipe	
3	0440162	1	Bearing	
4	0641504	1	Bolt, 5/16 x 1/2	
5	0700817	1	Bolt M8 x 45	
6	0760610	1	Bolt M6 x 20	
7	0760812	3	Bolt M8 x 25	
8	0761014	4	Bolt M10 x 30	
9	0761015	AR	Bolt M10 x 35	
10	1701542	2	Decal - Gas	
11	1701543	1	Decal - LPG (Not Shown)	
12	2180348	2	Fitting, Barbed	
13	3290605	1	Nut M6	
14	3290805	4	Nut M8	
15	3291005	AR	Nut M10	
16	3790012	1	O-Ring	
17	3841143	1	Keeper, Pin	
18	4240099	AR	Tie-Strap (Not Shown)	
19	4711500	1	Washer, 5/16	
20	4811700	2	Washer, M6	
21	3422532	1	Pin	
22	4811900	6	Washer, M8	
23	4812000	AR	Washer, M10	
24	5240800	2	Washer, M8 Hardened	
25	5251215	1	Bolt M12 x 35	
26	5261200	1	Nut, Flange M12 (Grade 10.9)	
27	1001217785	2	Clamp, Muffler	
28	1001135196	1	Pin	
29	1001155044	2	Nut, Special 15/32-32	
30	1001156107	2	Holder, Cable **(SN 0300203771 through 0300229351)**	
31	1001161710	1	Switch, Toggle	
32	1001167512	1	Bracket, Engine Tray Stow	
33	1001174486	2	Clamp	
34	1001210765	1	Engine and Pump Sub-Assembly - Kubota Engine (Without Arctic Package) (See ENGINE AND PUMP SUB-ASSEMBLY - KUBOTA ENGINE (WITHOUT ARCTIC PACKAGE) for Breakdown)	
35	1001212257	1	Cable, Kubota Alternator	
36	1001213062	1	Cable, Battery Cable Kit	
37	1001213599	1	Harness Engine - Kubota Engine (Not Shown - See ELECTRICAL SECTION for Breakdown)	
38	1001214502	1	Pipe, Tail Pipe	
39	1001215259	1	Plate, Engine Lock	
40	1001215801	1	Mount, Fuel System	
41	1001156819	20.9 in/ 53cm	Hose	
42	1001216396	1	Hose	
43	1001216397	1	Hose	
44	1001217494	2	Capscrew M12	

ITEM	PART NUMBER	QTY	DESCRIPTION	REV
45	1321283	1	Clamp	
46	4812100	2	Washer, M12	
47	1001216399	1	Hose	
49	1321716	1	Clamp **(SN 0300203771 through 0300229351)**	
49	1001195039	1	Clamp **(SN 0300229352 through 0300241777)**	
50	1001118972	3	Nut M10	
51	1001219348	1	Hose **(SN 0300203771 through 0300237483)**	
52	4812200	AR	Washer, M14	
53	24431386	1	Support, Clamp **(SN 0300229352 through 0300241777)**	
54	1001217345	AR	Bolt M14 x 30	
55	1001229798	1	Harness - Kubota B6 D/F Power (Not Shown - See ELECTRICAL SECTION for Breakdown)	
56	4460466	8	Terminal, Sealing Plug (Not Shown)	
57	4460930	1	Plug, Male - 8 Position (Deutsch) (Not Shown)	

FIGURE 3-35. ENGINE INSTALLATION - KUBOTA ENGINE (WITHOUT ARCTIC PACKAGE) (SN 0300241778 through 0300272360)

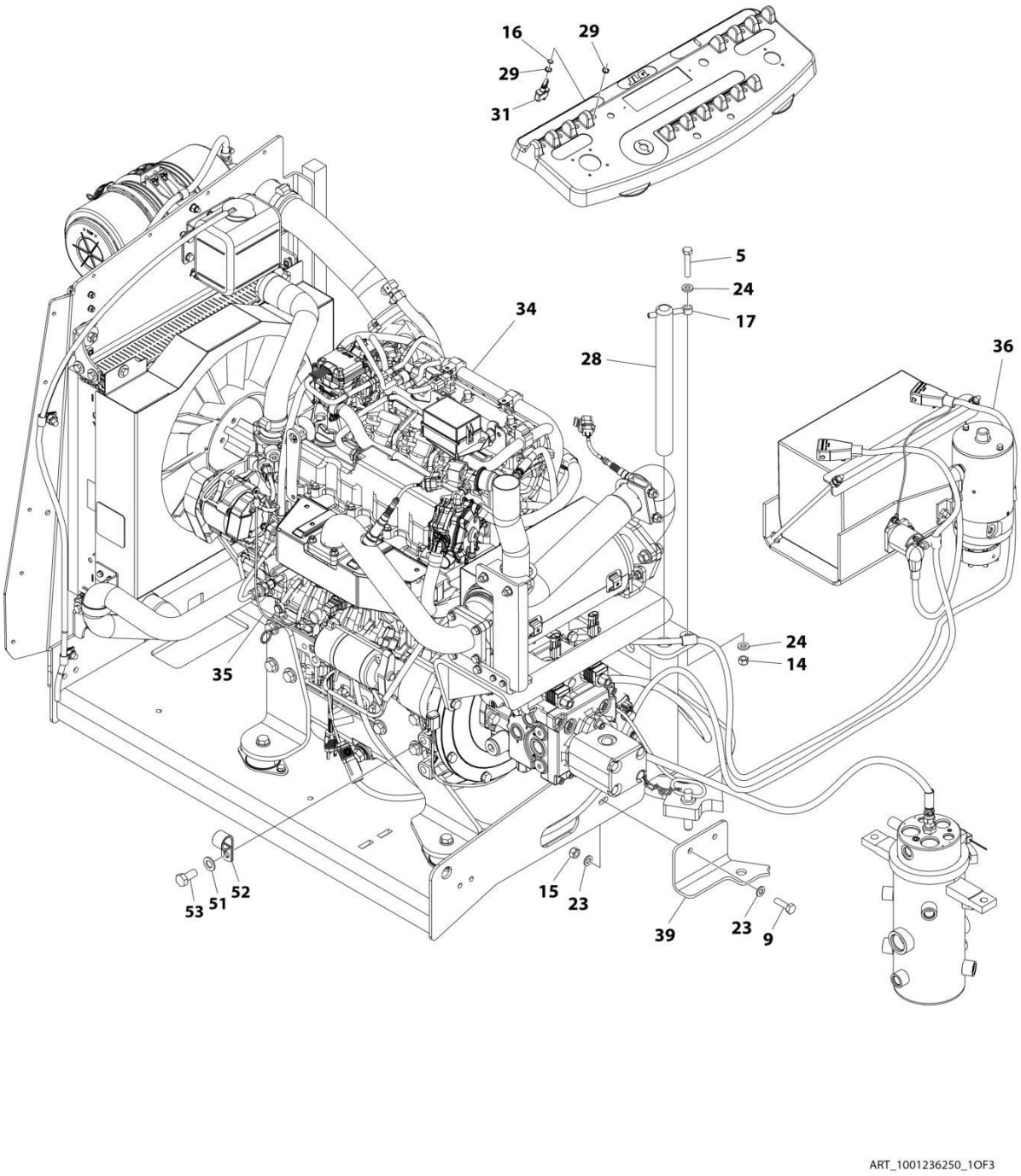

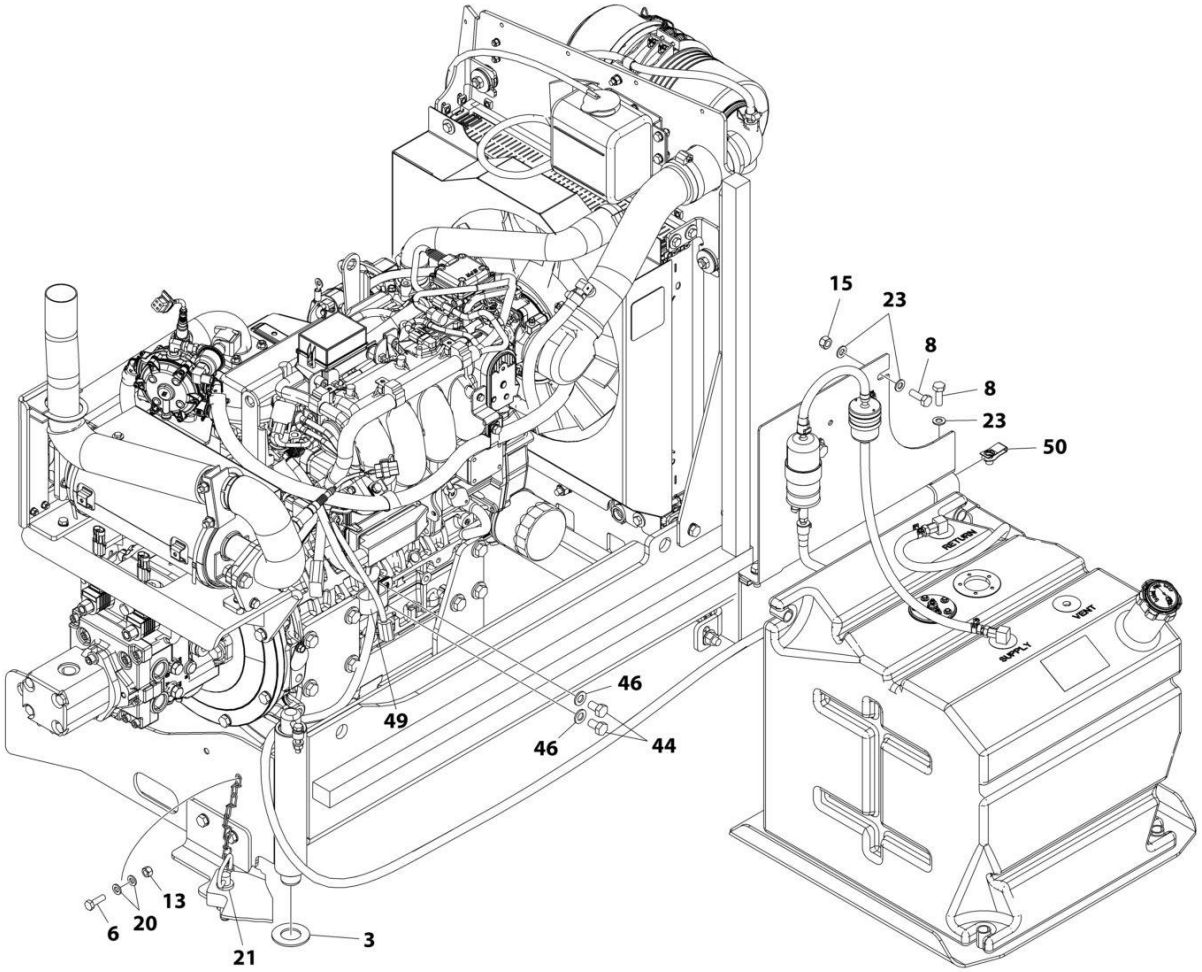

ART_1001236250_2OF3

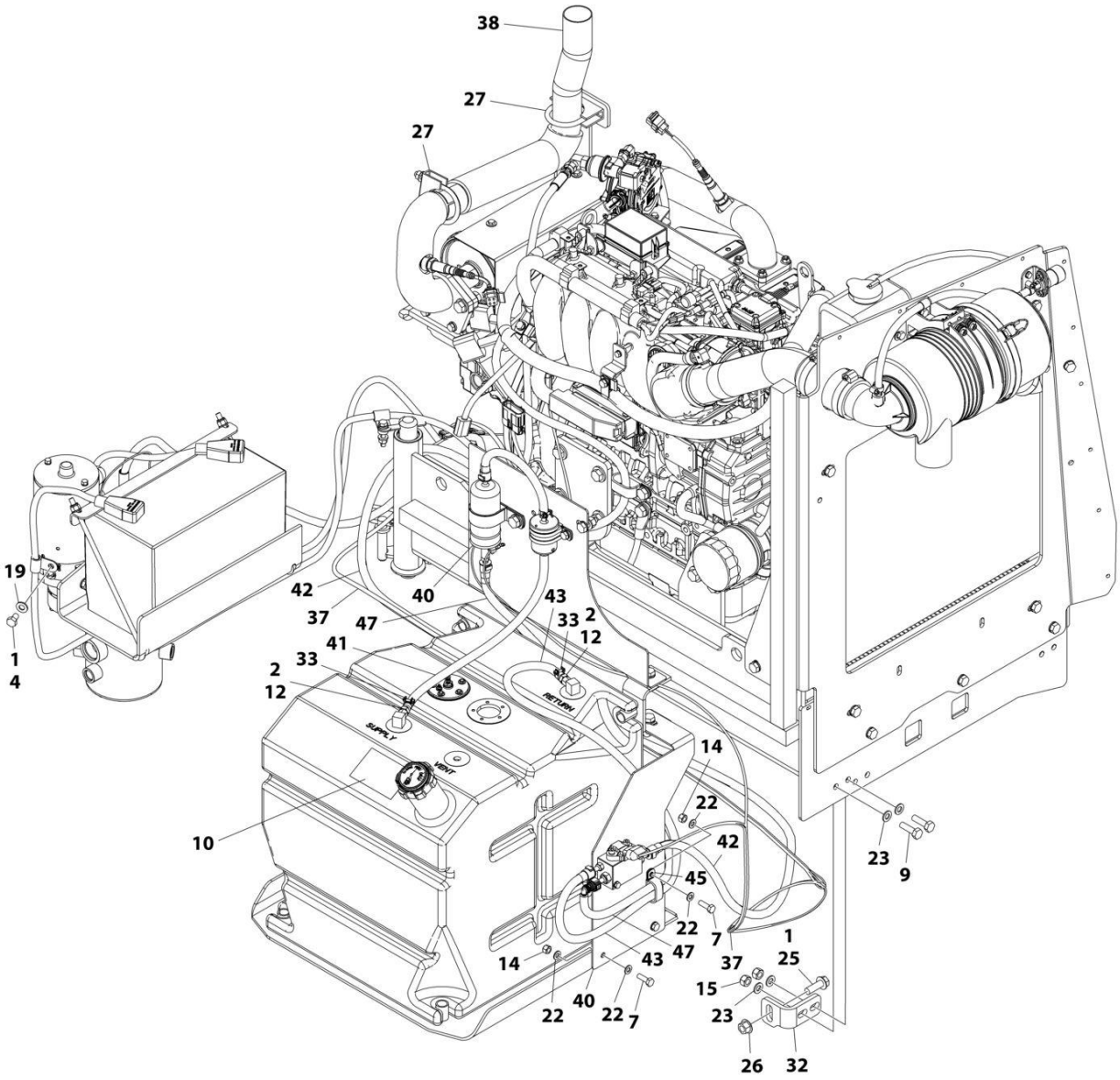

ART_1001236250_3OF3

FIGURE 3-35. ENGINE INSTALLATION - KUBOTA ENGINE (WITHOUT ARCTIC PACKAGE) (SN 0300241778 through 0300272360)

ITEM	PART NUMBER	QTY	DESCRIPTION	REV
	1001236250	Ref	ENGINE INSTALLATION - KUBOTA ENGINE (WITHOUT ARCTIC PACKAGE)	A
1	0100011	AR	Compound, Locking	
2	0100020	AR	Sealant, Pipe	
3	0440162	1	Bearing	
4	0641504	1	Bolt 5/16 x 1/2	
5	0700817	1	Bolt M8 x 45	
6	0760610	1	Bolt M6 x 20	
7	0760812	3	Bolt M8 x 25	
8	0761014	4	Bolt M10 x 30	
9	0761015	4	Bolt M10 x 35	
10	1701542	2	Decal - Gas	
11	1701543	1	Decal - LPG (Not Shown)	
12	2180348	2	Fitting, Barbed	
13	3290605	1	Nut, Lock M6 x 1	
14	3290805	4	Nut, Lock M8 x 1.25	
15	3291005	5	Nut, Lock M10 x 1.5	
16	3790012	1	O-Ring	
17	3841143	1	Keeper, Pin	
18	4240099	AR	Tie-Strap (Not Shown)	
19	4711500	1	Washer 5/16	
20	4811700	2	Washer M6	
21	3422532	1	Pin	
22	4811900	6	Washer M8	
23	4812000	13	Washer M10	
24	5240800	2	Washer M8 Hardened	
25	5251215	1	Bolt M12 x 35	
26	5261200	1	Nut, Flange M12 (Grade 10.9)	
27	1001217785	2	Clamp, Muffler	
28	1001135196	1	Pin	
29	1001155044	2	Nut, Special 15/32-32	
31	1001161710	1	Switch, Toggle	
32	1001167512	1	Bracket, Engine Tray Stow	
33	1001174486	2	Clamp	
34	1001236254	1	Engine and Pump Sub-Assembly - Kubota Engine (Without Arctic Package) (See ENGINE AND PUMP SUB-ASSEMBLY - KUBOTA ENGINE (WITHOUT ARCTIC PACKAGE) for Breakdown)	
35	1001212257	1	Cable, Kubota Alternator	
36	1001213062	1	Cable, Battery Cable Kit	
37	1001213599	1	Harness Engine - Kubota Engine (See ELECTRICAL SECTION for Breakdown)	
38	1001214502	1	Pipe, Tail Pipe	
39	1001215259	1	Plate, Engine Lock	
40	1001215801	1	Mount, Fuel System	
41	1001156819	20 in/ 53cm	Hose	
42	1001216396	1	Hose	
43	1001216397	1	Hose	
44	1001217494	2	Bolt M12 x 20	
45	1321283	1	Clamp	

ITEM	PART NUMBER	QTY	DESCRIPTION	REV
46	4812100	2	Washer M12	
47	1001216399	1	Hose	
49	1001195039	1	Clamp	
50	1001118972	3	Nut M10 x 1.5	
51	4812200	1	Washer M14	
52	24431386	1	Support Clamp 15/16	
53	1001217345	1	Bolt M14 x 30	
54	1001229798	1	Harness - Kubota B6 D/F Power (Not Shown - See ELECTRICAL SECTION for Breakdown)	
55	4460466	8	Terminal, Sealing Plug (Not Shown)	
56	4460930	1	Plug, Male - 8 Position (Deutsch) (Not Shown)	

FIGURE 3-36. ENGINE AND PUMP SUB-ASSEMBLY - KUBOTA ENGINE (WITHOUT ARCTIC PACKAGE) (SN 0300203771 through 0300241777)

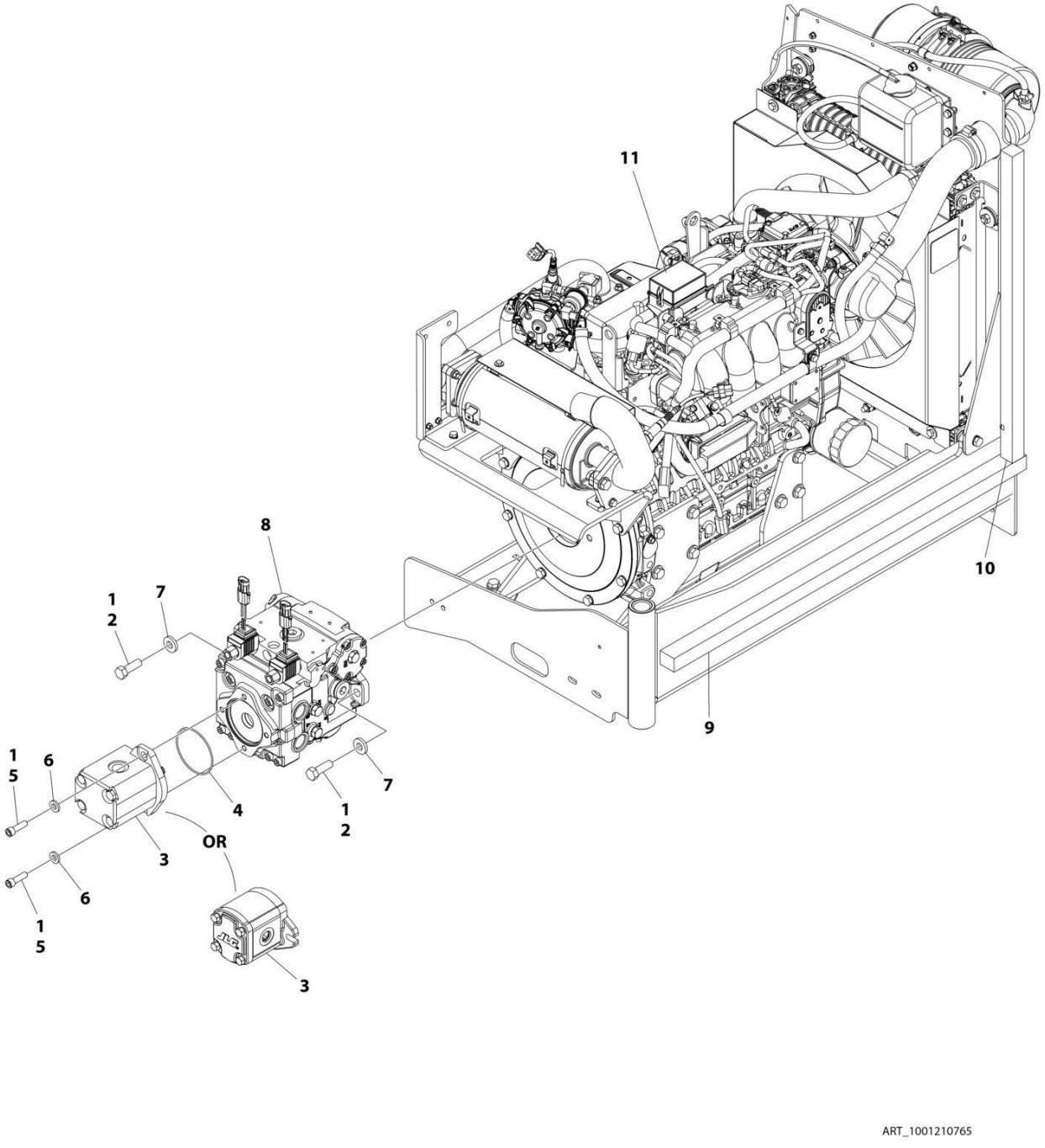

FIGURE 3-36. ENGINE AND PUMP SUB-ASSEMBLY - KUBOTA ENGINE (WITHOUT ARCTIC PACKAGE) (SN 0300203771 through 0300241777)

ITEM	PART NUMBER	QTY	DESCRIPTION	REV
	1001210765	Ref	ENGINE AND PUMP SUB-ASSEMBLY - KUBOTA ENGINE (WITHOUT ARCTIC PACKAGE)	E
1	0100011	AR	Compound, Locking	
2	0641812	2	Bolt, 1/2-13 x 1-1/2	
3	3600242	1	Gear Pump Assembly (See GEAR PUMP ASSEMBLY for Breakdown) **(SN 0300203771 through 0300237045)**	
3	1001214207	1	Gear Pump Assembly **(SN 0300237046 through 0300241777)**	
3	70006356	1	Seal Kit - 1001214207 Pump	
4	3790152	1	O-Ring	
5	3931620	AR	Capscrew 3/8 x 1-1/4	
5	3931618	AR	Capscrew 3/8 x 1-1/8	
6	4891600	2	Washer, 3/8 Hardened	
7	4891800	2	Washer, 1/2 Hardened	
8	1001167036	1	Piston Pump Assembly (See PISTON PUMP ASSEMBLY for Breakdown)	
9	1001171953	1	Seal	
10	1001171954	1	Seal	
11	1001210421	1	Engine Assembly - Kubota Engine (Without Arctic Package) (See ENGINE ASSEMBLY - KUBOTA ENGINE (WITHOUT ARCTIC PACKAGE) for Breakdown)	

FIGURE 3-37. ENGINE AND PUMP SUB-ASSEMBLY - KUBOTA ENGINE (WITHOUT ARCTIC PACKAGE) (SN 0300241778 through 0300272360)

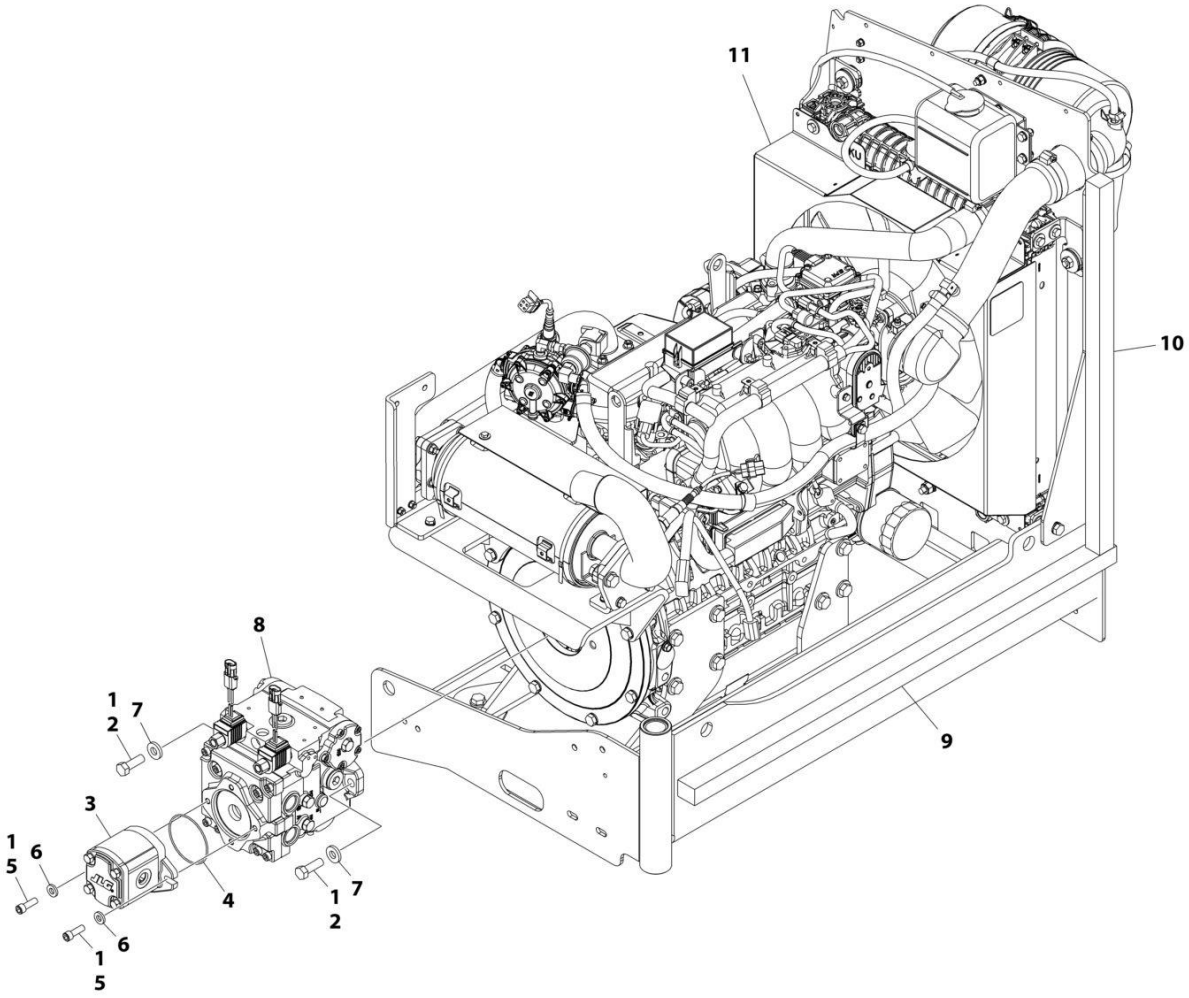

FIGURE 3-37. ENGINE AND PUMP SUB-ASSEMBLY - KUBOTA ENGINE (WITHOUT ARCTIC PACKAGE) (SN 0300241778 through 0300272360)

ITEM	PART NUMBER	QTY	DESCRIPTION	REV
	1001236254	Ref	ENGINE AND PUMP SUB-ASSEMBLY - KUBOTA ENGINE (WITHOUT ARCTIC PACKAGE)	A
1	0100011	AR	Loctite	
2	0641812	2	Bolt 1/2 x 1-1/2	
3	1001214207	1	Pump, Gear	
4	3790152	1	O-Ring	
5	3931618	2	Bolt 3/8 x 1-1/8	
6	4891600	2	Washer 3/8	
7	4891800	2	Washer 1/2	
8	1001167036	1	Pump	
9	1001171953	1	Seal, Gasket	
10	1001171954	1	Seal, Gasket	
11	1001236256	1	Engine Assembly - Kubota Engine (Without Arctic Package) (See ENGINE ASSEMBLY - KUBOTA ENGINE (WITHOUT ARCTIC PACKAGE) for Breakdown)	

FIGURE 3-38. ENGINE ASSEMBLY - KUBOTA ENGINE (WITHOUT ARCTIC PACKAGE) (SN 0300203771 through 0300241777)

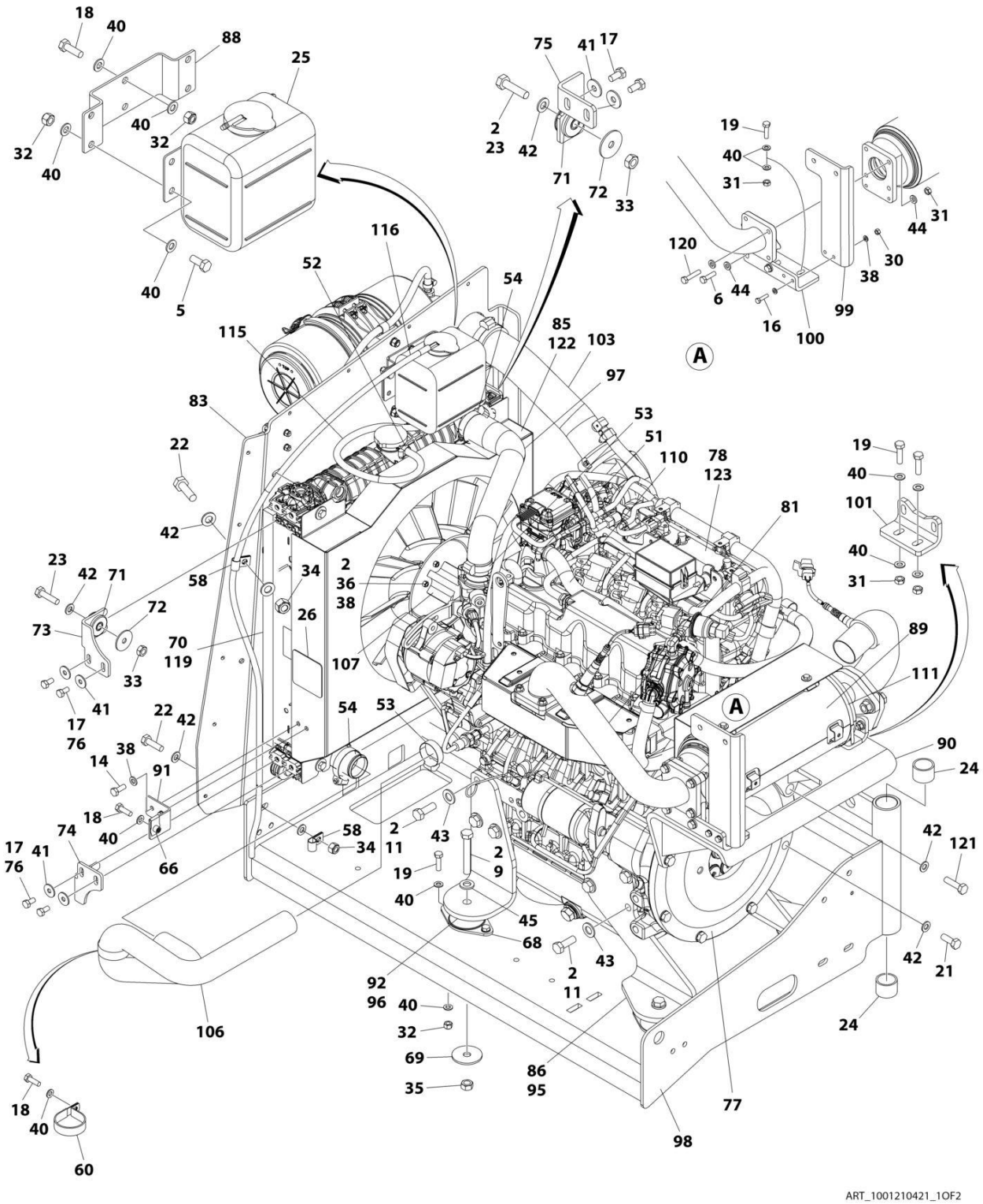

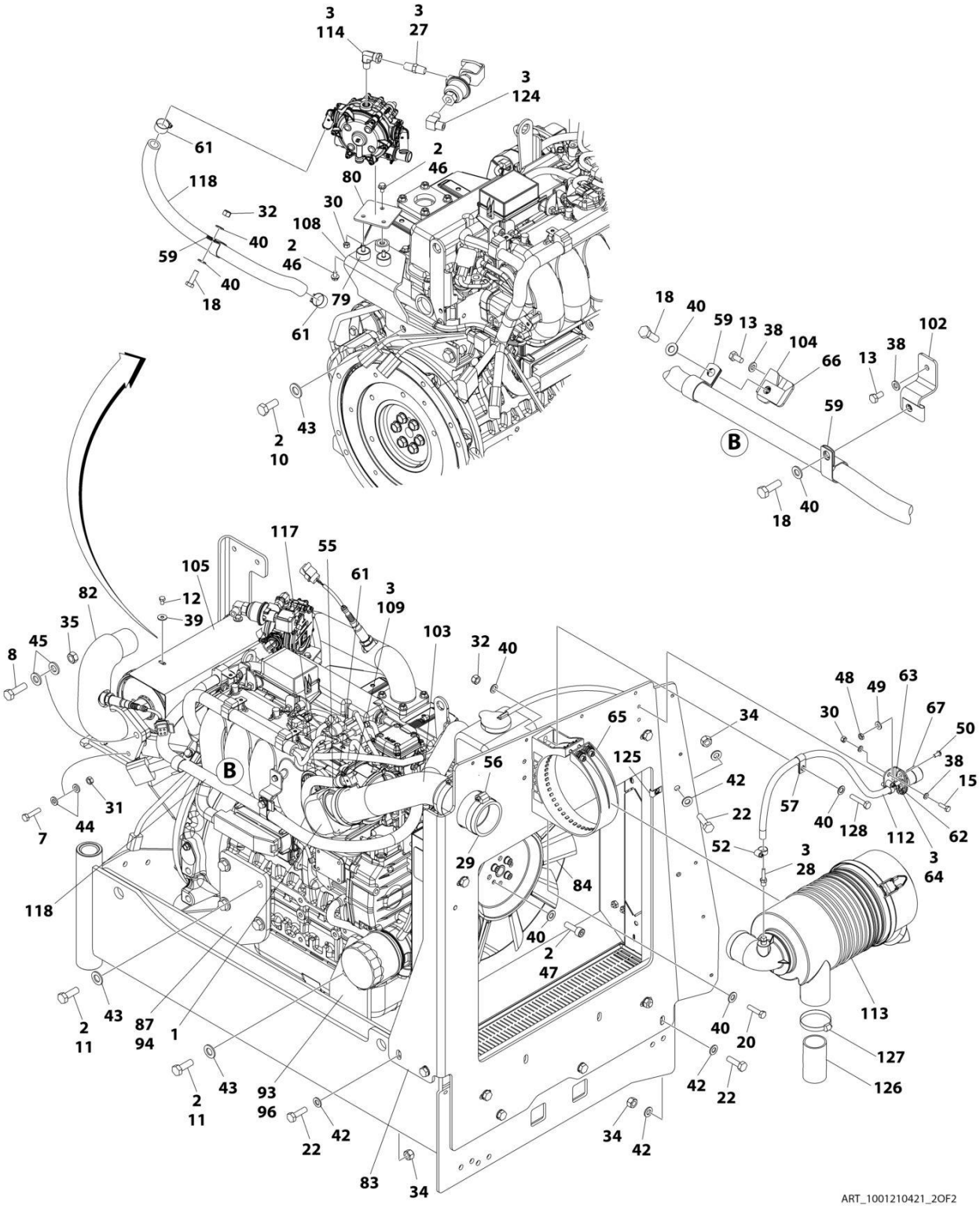
3
114
3
27
3
124
61
118
2
46
80
32
30
108
40
59
2
46
40
18
79
61
43
2
10
18
40
59
13
38
104
66
13
38
102
59
B
40
18
117
55
105
61
3
109
82
12
39
35
45
8
103
32
40
48
49
63
30
67
50
34
65
125
56
38
15
42
57
40
128
112
62
22
52
3
28
3
64
31
44
7
29
84
118
40
2
47
113
2
11
43
87
94
1
40
20
127
126
2
11
43
93
96
42
22
22
42
34
42
83
34
ART_1001210421_2OF2

FIGURE 3-38. ENGINE ASSEMBLY - KUBOTA ENGINE (WITHOUT ARCTIC PACKAGE) (SN 0300203771 through 0300241777)

ITEM	PART NUMBER	QTY	DESCRIPTION	REV
	1001210421	Ref	ENGINE ASSEMBLY - KUBOTA ENGINE (WITHOUT ARCTIC PACKAGE)	H
1	0080201	1	Adapter, 90	
2	0100011	AR	Compound, Locking	
3	0100020	AR	Sealant, Pipe	
5	0700810	4	Bolt M8 x 20	
6	0700814	2	Bolt M8 x 30	
7	0700815	2	Bolt M8 x 35	
8	0701216	2	Bolt M12 x 40	
9	0701224	4	Bolt M12 x 80	
10	0711214	AR	Bolt M12 x 30	
10	1001217494	AR	Bolt M12 x 20	
11	1001217343	14	Bolt M12 x 35	
12	0760605	4	Bolt M6 x 10	
13	0760606	2	Bolt M6 x 12	
14	0760608	2	Bolt M6 x 16	
15	0760610	2	Bolt M6 x 20	
16	0760612	2	Bolt M6 x 25	
17	0760808	8	Bolt M8 x 16	
18	0760812	6	Bolt M8 x 25	
19	0760814	12	Bolt M8 x 30	
20	0760815	AR	Bolt M8 x 35	
21	0761014	4	Bolt M10 x 30	
22	0761015	6	Bolt M10 x 35	
23	0761016	4	Bolt M10 x 40	
24	0961951	2	Bushing	
25	1580011	1	Container, Coolant Overflow	
26	1703162	2	Decal - Caution Fan	
27	2220261	1	Fitting, Nipple NPTF/NPTF	
28	2220315	1	Fitting, Barbed	
29	2720644	1	Hose	
30	3290607	5	Nut M6	
31	3290801	10	Nut M8	
32	3290805	17	Nut M8	
33	3291001	4	Nut M10	
34	3291005	6	Nut M10	
35	3291201	6	Nut M12	
36	4031711	4	Bolt M6 x 35	
37	4240099	AR	Tie-Strap (Not Shown)	
38	4811700	16	Washer M6	
39	4811702	4	Washer M6	
40	4811900	49	Washer M8	
41	4811902	8	Washer M8	
42	4812000	24	Washer M10	
43	4812200	AR	Washer M14	
43	5241400	AR	Washer M14	
44	5240800	14	Washer, M8 Hardened	
45	5241200	8	Washer, M12 Hardened	
46	5250605	3	Bolt M6 x 10	

ITEM	PART NUMBER	QTY	DESCRIPTION	REV
47	5271809	4	Bolt, M8 x 25mm	
48	8305401	2	Nut, Jam .250-20	
49	8307109	2	Washer, .250	
50	8310548	2	Screw, 1/4 NC x 1/2	
51	8405007	2	Clamp **(SN 0300203771 through 0300228655)**	
51	1001173535	2	Clamp **(SN 0300228656 through 0300272360, Except SN 0300272174 through 0300272184)**	
52	8405009	4	Clamp	
53	8405102	2	Clamp	
54	8405104	2	Clamp	
55	8405202	1	Clamp	
56	8405203	3	Clamp	
57	8406109	1	Clip	
58	8406110	1	Clip	
59	8406201	3	Clip	
60	8410001	1	Clamp	
61	8410009	6	Clamp	
62	1001138173	1	Support, Service Indicator	
63	1001138175	1	Bracket, Service Indicator	
64	1001141995	1	Fitting, Barbed	
65	1001147812	1	Clamp, Air Cleaner	
66	1001149160	3	Nut M8	
67	1001149639	1	Indicator, Air Intake	
68	1001166718	4	Isolator, Engine Mount	
69	1001168018	4	Washer, Snubbing	
70	1001168166	2	Seal	
71	1001169054	4	Isolator, Radiator	
72	1001169138	4	Washer, Snubbing	
73	1001169967	2	Bracket	
74	1001170035	1	Bracket	
75	1001176330	1	Bracket	
76	1001180620	AR	Adhesive	
77	1001209844	1	Pump Coupling Kit (See PUMP COUPLING KIT for Breakdown)	
78	1001210763	1	Engine, Kubota	
79	1001211794	3	Mount	
80	1001211797	1	Mount	
81	1001212989	1	Pipe, Exhaust (Inlet)	
82	1001212993	1	Pipe Exhaust (Outlet)	
83	1001213305	1	Plate, Mounting	
84	1001213357	1	Fan	
85	1001213423	1	Radiator	
86	1001213425	1	Plate, Engine Mount (Left Rear)	
87	1001213426	1	Plate, Engine Mount (Right Rear)	
88	1001213482	1	Bracket	
89	1001213824	1	Insulation	
90	1001214138	1	Bracket	
91	1001214205	1	Support	
92	1001214233	1	Plate (Front Left)	
93	1001214234	1	Plate (Front Right)	
94	1001214276	1	Shim	
95	1001214277	1	Shim	
96	1001214278	2	Shim	

ITEM	PART NUMBER	QTY	DESCRIPTION	REV
97	1001214307	1	Hose	
98	1001214508	1	Support	
99	1001214553	1	Support	
100	1001214555	1	Bracket	
101	1001214556	1	Bracket	
102	1001214558	1	Bracket	
103	1001214598	1	Tube	
104	1001214599	1	Bracket	
105	1001214664	1	Cover	
106	1001214694	1	Hose	
107	1001214729	1	Spacer	
108	1001214841	1	Bracket	
109	1001215125	1	Fitting, 90	
110	1001215869	1	Hose	
111	1001137336	2	Strap	
112	1001138248	2 ft/ 0.61m	Tube	
113	1001147813	1	Air Cleaner Assembly Including Filter Element	
113	70004020	1	Element, Filter (Not Shown)	
114	2220064	1	Fitting, 90 FSNPSM/NPTF	
115	2720058	1.75 ft/ 0.53m	Hose	
116	2720271	4 ft/ 1.22m	Hose	
117	2720615	1.25 ft/ 0.38m	Hose	
118	82033995	5.5 ft/ 1.68m	Hose	
119	1001216825	2	Seal	
120	0700816	4	Bolt M8 x 40	
121	0701016	4	Bolt M10 x 40	
122	2300004	2.7 gal/ 10.2L	Coolant, Anti-Freeze	
123	1001190775	10 qt/ 9.4L	Oil, Engine	
124	2180504	1	Fitting, Barbed	
125	1001118274	1	Nut, Special M8	
126	1001001939	1	Tube, Flex	
127	8410011	1	Clamp	
128	0760816	AR	Bolt M8 x 40	

FIGURE 3-39. ENGINE ASSEMBLY - KUBOTA ENGINE (WITHOUT ARCTIC PACKAGE) (SN 0300241778 through 0300272360)

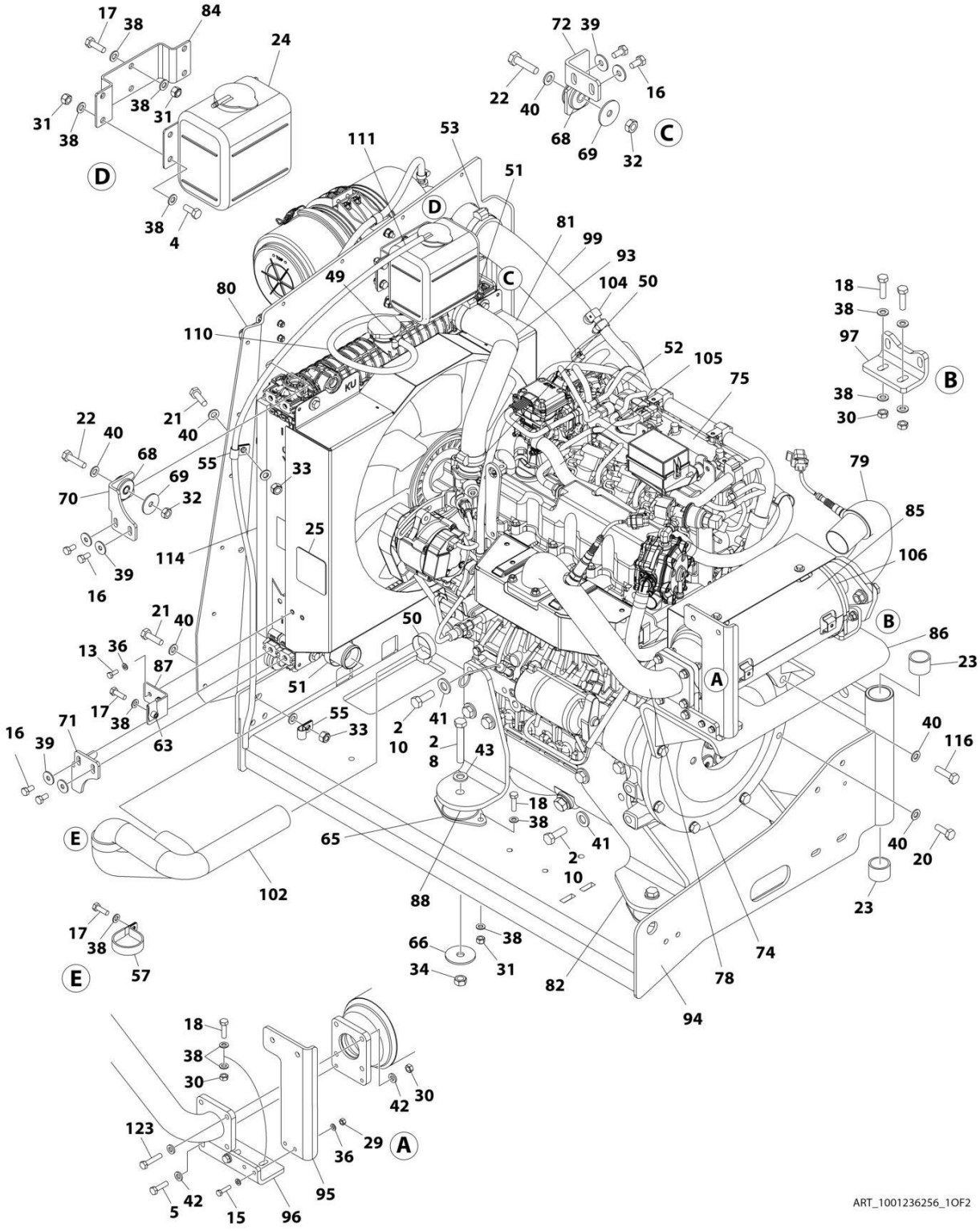

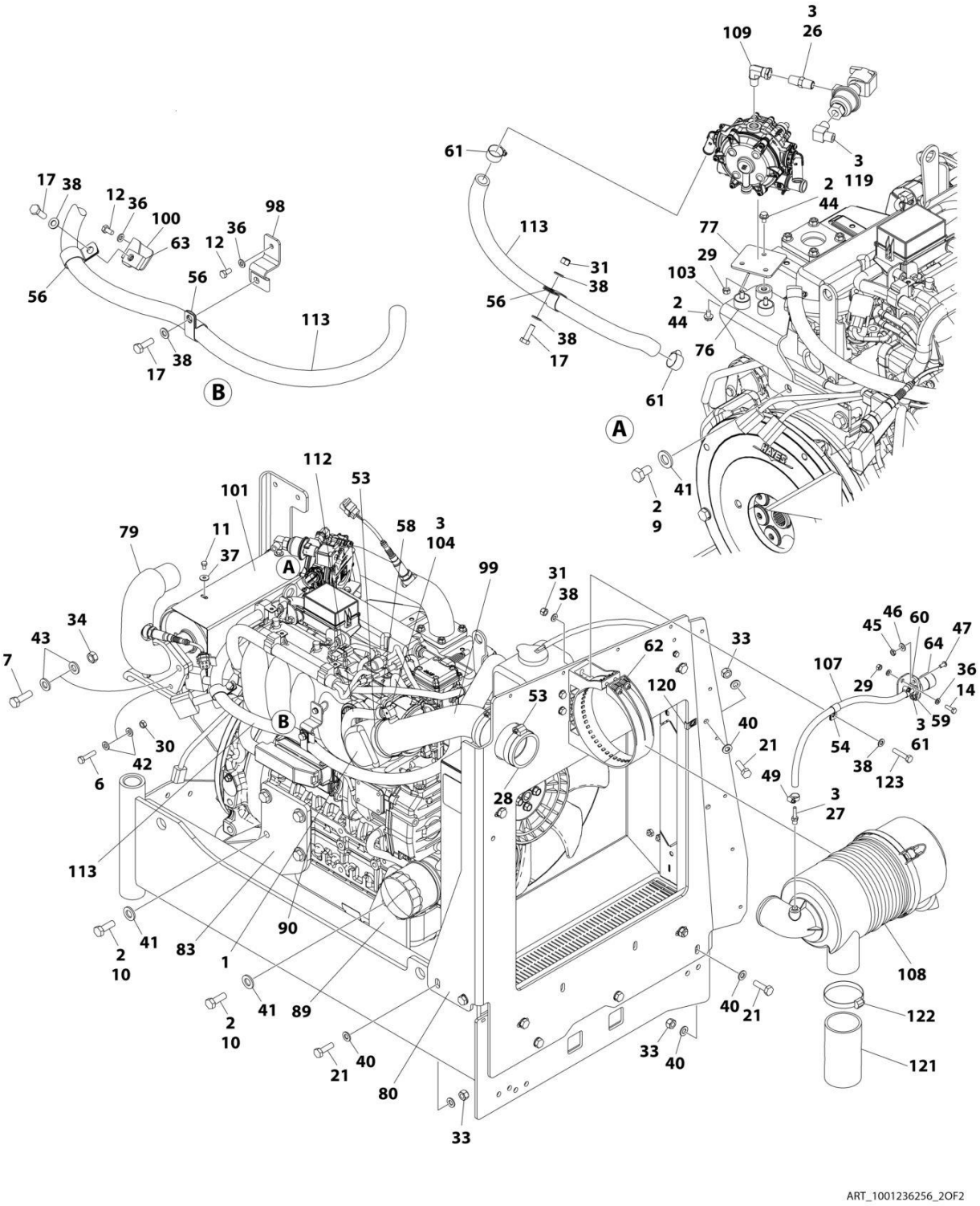
ART_1001236256_2OF2

FIGURE 3-39. ENGINE ASSEMBLY - KUBOTA ENGINE (WITHOUT ARCTIC PACKAGE) (SN 0300241778 through 0300272360)

ITEM	PART NUMBER	QTY	DESCRIPTION	REV
	1001236256	Ref	ENGINE ASSEMBLY - KUBOTA ENGINE (WITHOUT ARCTIC PACKAGE)	A
1	0080201	1	Adapter, 90	
2	0100011	AR	Compound, Locking	
3	0100020	AR	Sealant, Pipe	
4	0700810	4	Bolt M8 x 20	
5	0700814	2	Bolt M8 x 30	
6	0700815	2	Bolt M8 x 35	
7	0701216	2	Bolt M12 x 40	
8	0701224	4	Bolt M12 x 80	
9	1001217494	2	Bolt M12 x 20	
10	1001217343	14	Bolt M12 x 35	
11	0760605	4	Bolt M6 x 10	
12	0760606	2	Bolt M6 x 12	
13	0760608	2	Bolt M6 x 16	
14	0760610	2	Bolt M6 x 20	
15	0760612	2	Bolt M6 x 25	
16	0760808	8	Bolt M8 x 16	
17	0760812	6	Bolt M8 x 25	
18	0760814	12	Bolt M8 x 30	
19	0760815	1	Bolt M8 x 35	
20	0761014	4	Bolt M10 x 30	
21	0761015	6	Bolt M10 x 35	
22	0761016	4	Bolt M10 x 40	
23	0961951	2	Bushing	
24	1580011	1	Container, Coolant Overflow	
25	1703162	2	Decal - Caution Fan	
26	2220261	1	Fitting, Nipple NPTF/NPTF	
27	2220315	1	Fitting, Barbed	
28	2720644	1	Hose	
29	3290607	5	Nut, Lock M6 x 1	
30	3290801	10	Nut, M8	
31	3290805	17	Nut, Lock M8 x 1.25	
32	3291001	4	Nut, Lock M10 x 1.5	
33	3291005	6	Nut, Lock M10 x 1.5	
34	3291201	6	Nut M12	
35	4240099	AR	Tie-Strap (Not Shown)	
36	4811700	12	Washer, M6	
37	4811702	4	Washer, M6	
38	4811900	45	Washer, M8	
39	4811902	8	Washer, M8	
40	4812000	24	Washer, M10	
41	5241400	16	Washer, M14	
42	5240800	14	Washer, M8 Hardened	
43	5241200	8	Washer, M12 Hardened	
44	5250605	3	Bolt M6 x 10	
45	8305401	2	Nut, Jam .250-20	
46	8307109	2	Washer, .250	
47	8310548	2	Screw, 1/4 NC x 1/2	

ITEM	PART NUMBER	QTY	DESCRIPTION	REV
48	1001173535	2	Clamp	
49	8405009	4	Clamp	
50	8405102	2	Clamp	
51	8405104	2	Clamp	
52	8405202	1	Clamp	
53	8405203	3	Clamp	
54	8406109	1	Clip	
55	8406110	2	Clip	
56	8406201	3	Clip	
57	8410001	1	Clamp	
58	8410009	6	Clamp	
59	1001138173	1	Support, Service Indicator	
60	1001138175	1	Bracket, Service Indicator	
61	1001141995	1	Fitting, Barbed	
62	1001147812	1	Clamp, Air Cleaner	
63	1001149160	3	Nut M8	
64	1001149639	1	Indicator, Air Intake	
65	1001166718	4	Isolator, Engine Mount	
66	1001168018	4	Washer, Snubbing	
67	1001168166	2	Seal	
68	1001169054	4	Isolator, Radiator	
69	1001169138	4	Washer, Snubbing	
70	1001169967	2	Bracket	
71	1001170035	1	Bracket	
72	1001176330	1	Bracket	
73	1001180620	AR	Adhesive	
74	1001209844	1	Pump Coupling Kit (See Separate Breakdown in this Section)	
75	1001236393	1	Engine, Kubota (See Separate Breakdown in this Section)	
76	1001211794	3	Mount	
77	1001211797	1	Mount	
78	1001212989	1	Pipe, Exhaust (Inlet)	
79	1001212993	1	Pipe Exhaust (Outlet)	
80	1001213305	1	Plate, Mounting	
81	1001236257	1	Radiator	
82	1001213425	1	Plate, Engine Mount (Left Rear)	
83	1001213426	1	Plate, Engine Mount (Right Rear)	
84	1001213482	1	Bracket	
85	1001213824	1	Insulation	
86	1001214138	1	Bracket	
87	1001214205	1	Support	
88	1001214233	1	Plate (Front Left)	
89	1001214234	1	Plate (Front Right)	
90	1001214276	1	Shim	
91	1001214277	1	Shim	
92	1001214278	2	Shim	
93	1001214307	1	Hose	
94	1001214508	1	Support	
95	1001214553	1	Support	
96	1001214555	1	Bracket	
97	1001214556	1	Bracket	
98	1001214558	1	Bracket	

ITEM	PART NUMBER	QTY	DESCRIPTION	REV
99	1001214598	1	Tube	
100	1001214599	1	Bracket	
101	1001214664	1	Cover	
102	1001214694	1	Hose	
103	1001214841	1	Bracket	
104	1001215125	1	Fitting, 90	
105	1001215869	1	Hose	
106	1001137336	2	Strap	
107	1001138248	2 ft/ 0.61m	Tube	
108	1001147813	1	Air Cleaner Assembly Including Filter Element	
109	2220064	1	Fitting, 90 FSNPSM/NPTF	
110	2720058	1.75 ft/ 0.53m	Hose	
111	2720271	4 ft/ 1.22m	Hose	
112	2720615	1.25 ft/ 0.38m	Hose	
113	82033995	5.5 ft/ 1.68m	Hose	
114	1001216825	2	Seal	
115	0700816	4	Bolt M8 x 40	
116	0701016	4	Bolt M10 x 40	
117	2300004	2.7 gal/ 10.2L	Coolant, Anti-Freeze	
118	1001190775	10 qt/ 9.4L	Oil, Engine	
119	2180504	1	Fitting, Barbed	
120	1001118274	1	Nut, Special M8	
121	1001001939	1	Tube, Flex	
122	8410011	1	Clamp	
123	0760816	1	Bolt M8 x 40	

FIGURE 3-40. PUMP COUPLING KIT - KUBOTA ENGINE

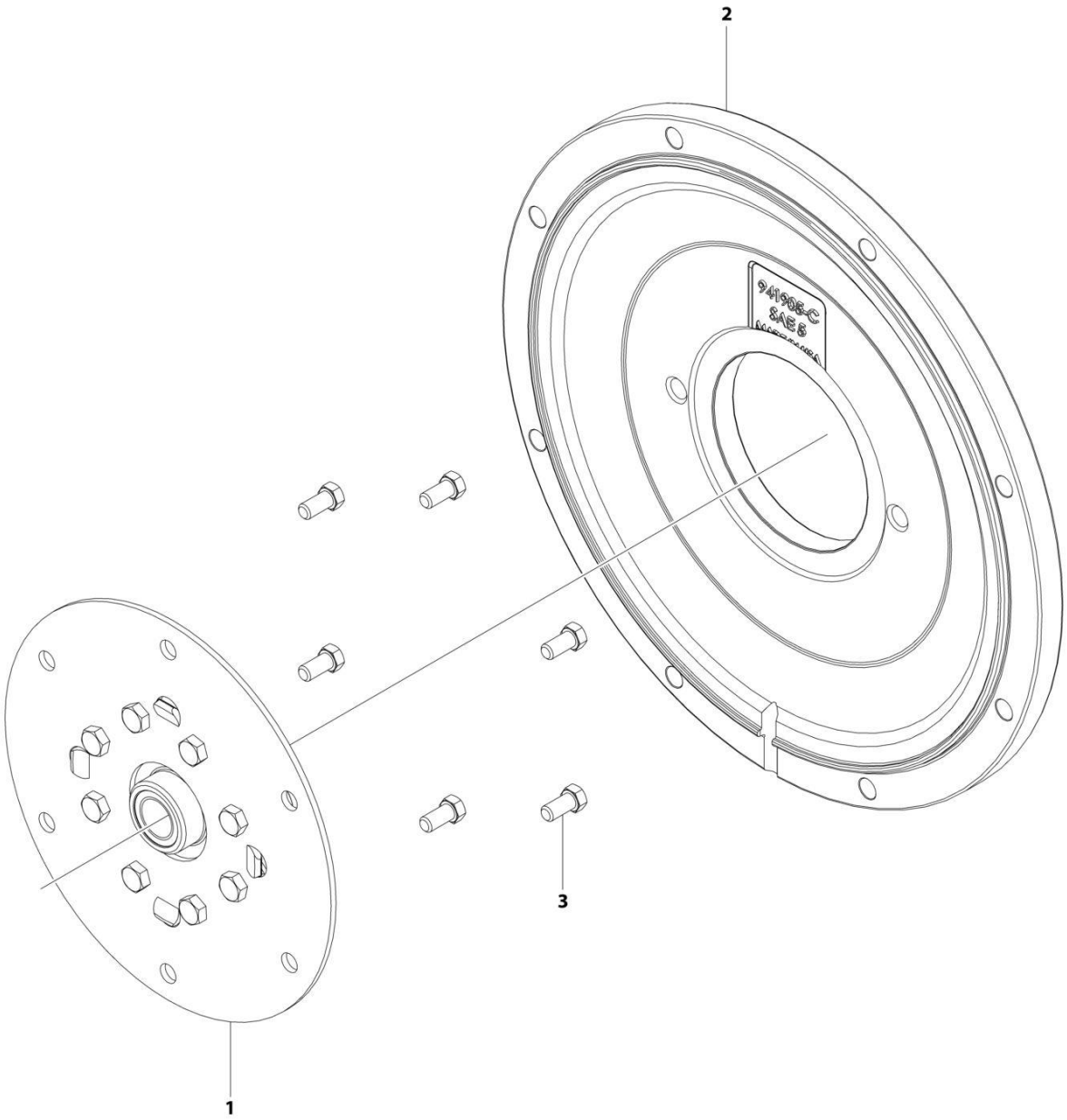

FIGURE 3-40. PUMP COUPLING KIT - KUBOTA ENGINE

ITEM	PART NUMBER	QTY	DESCRIPTION	REV
	1001209844	Ref	PUMP COUPLING KIT - KUBOTA ENGINE	B
1	70006010	1	Coupling Assembly, Hayes	
2	70006011	1	Plate, Pump Adapter	
3	70006012	1	Bolt Kit	

FIGURE 3-41. ENGINE INSTALLATION - KUBOTA ENGINE (WITH ARCTIC PACKAGE) (SN 0300203771 through 0300241777)

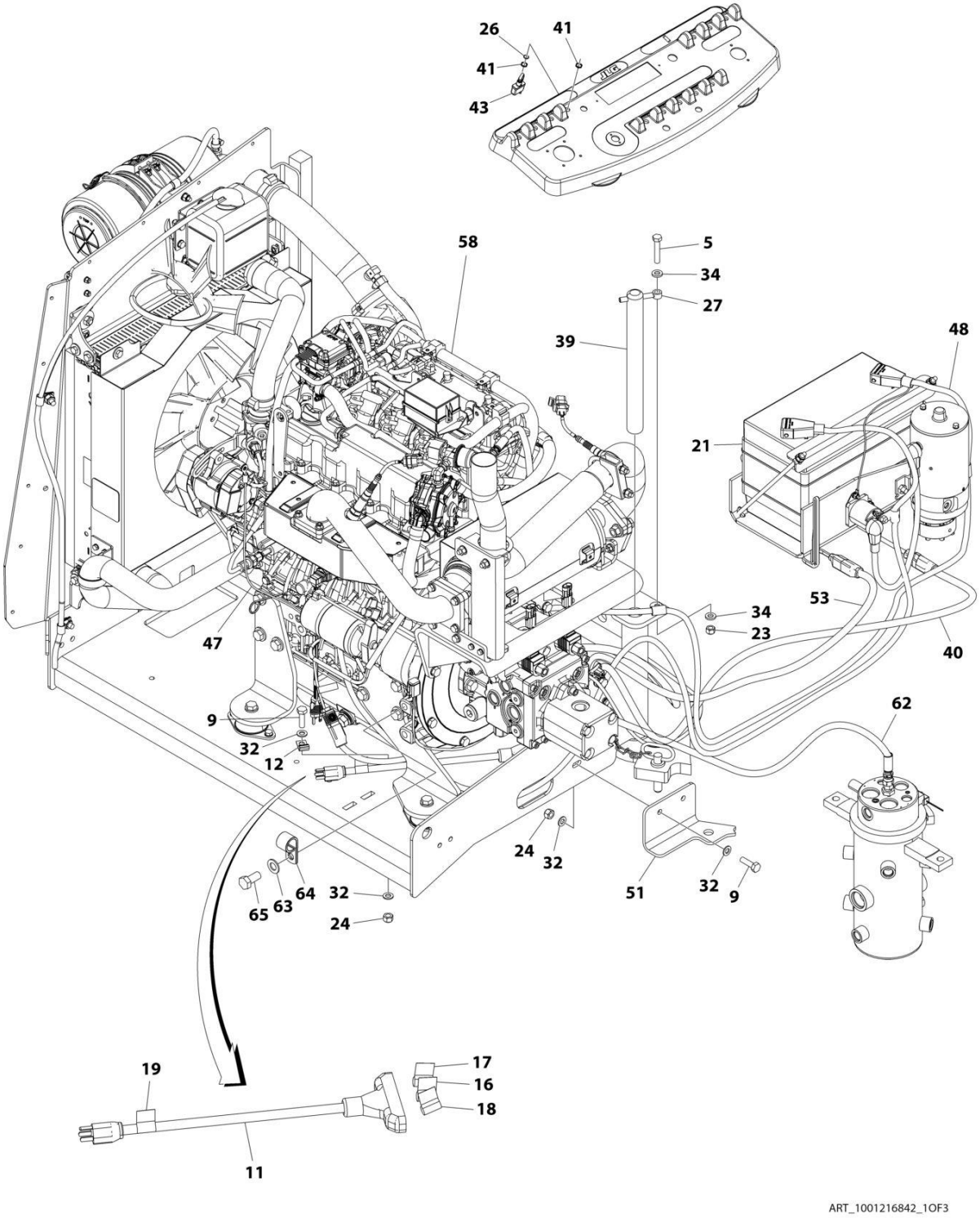

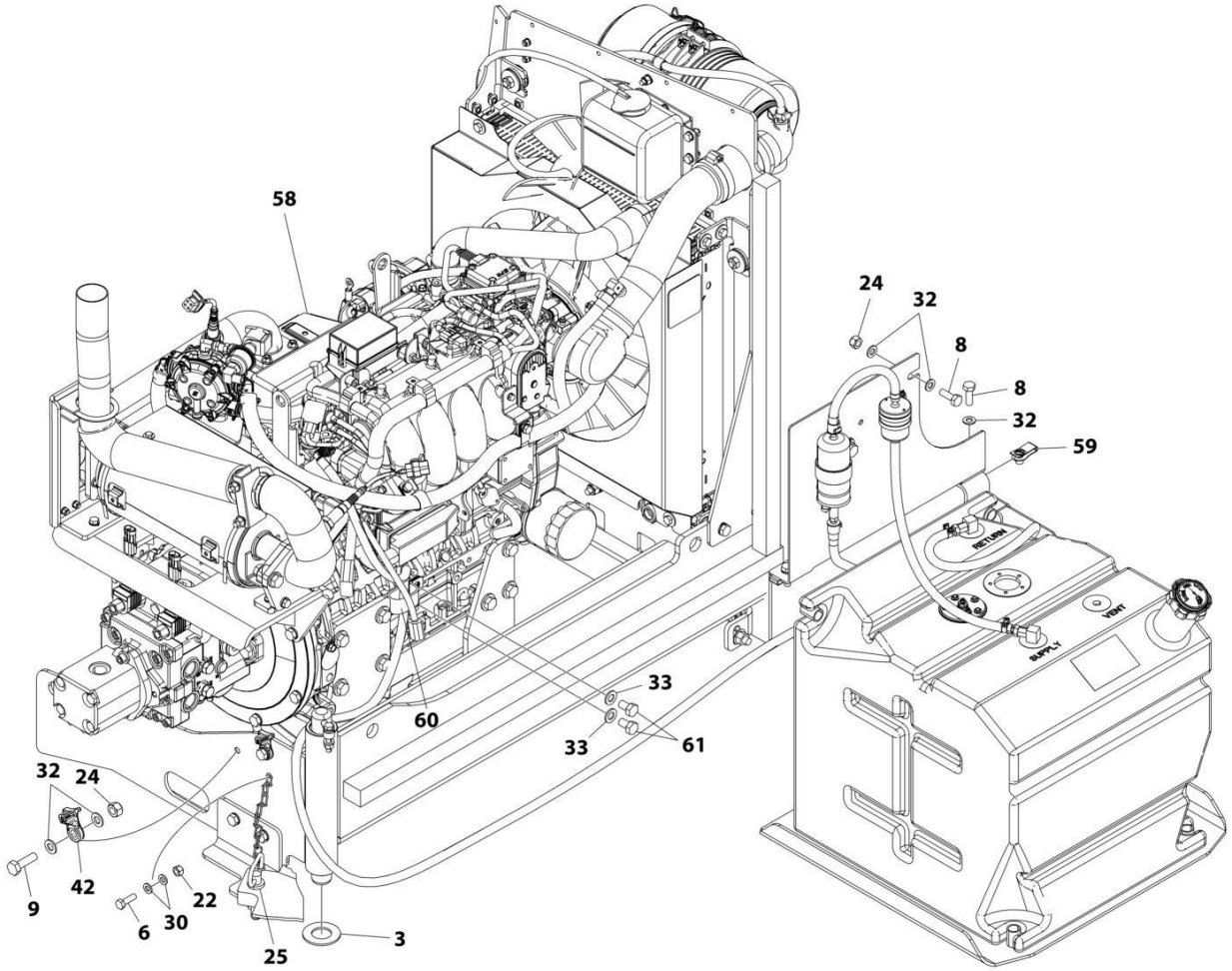

ART_1001216842_2OF3

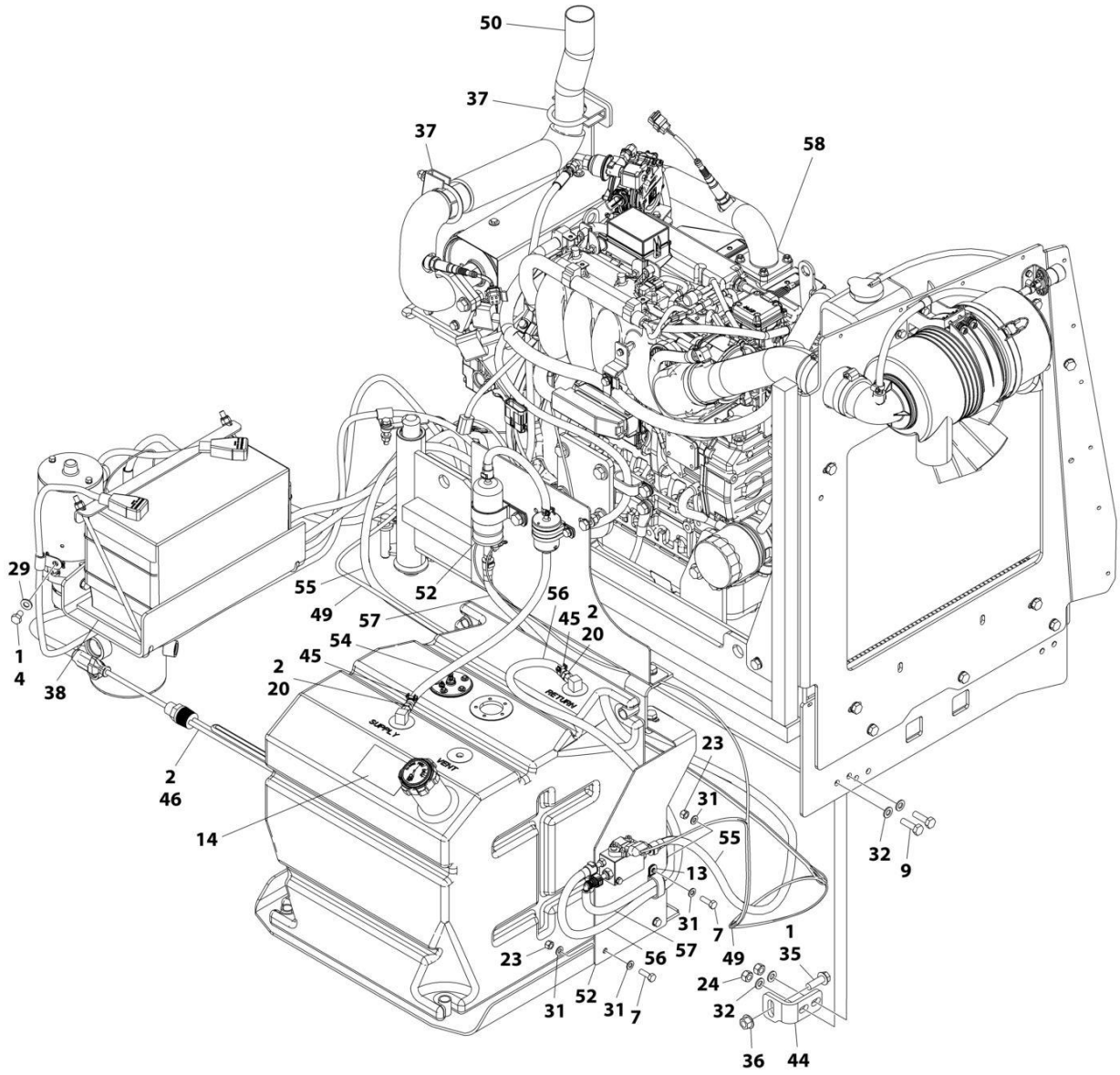
50
37
37
58
29
1
4
38
55
49
57
52
56
45
2
20
54
45
2
20
2
46
14
SUPPLY
RETURN
23
31
55
13
31
7
1
49
57
56
23
52
31
31
7
24
32
35
36
44
32
9
ART_1001216842_3OF3

FIGURE 3-41. ENGINE INSTALLATION - KUBOTA ENGINE (WITH ARCTIC PACKAGE) (SN 0300203771 through 0300241777)

ITEM	PART NUMBER	QTY	DESCRIPTION	REV
	1001216842	Ref	ENGINE INSTALLATION - KUBOTA ENGINE (WITH ARCTIC PACKAGE)	E
1	0100011	AR	Compound, Locking	
2	0100020	AR	Sealant, Pipe	
3	0440162	1	Bearing	
4	0641504	1	Bolt, 5/16 x 1/2	
5	0700817	1	Bolt M8 x 45	
6	0760610	1	Bolt M6 x 20	
7	0760812	3	Bolt M8 x 25	
8	0761014	4	Bolt M10 x 30	
9	0761015	AR	Bolt M10 x 35	
11	1060626	1	Plug, 3 Way	
12	1320223	1	Clamp	
13	1321283	1	Clamp	
14	1701542	2	Decal - Gas	
15	1701543	1	Decal - LPG (Not Shown)	
16	1702941	1	Decal - Battery Heater	
17	1702942	1	Decal - Engine Block Heater	
18	1702943	1	Decal - Hydraulic Tank Heater	
19	1702944	1	Decal - Heater Cord	
20	2180348	2	Fitting, Barbed	
21	2580024	1	Heater, Battery	
22	3290605	1	Nut M6	
23	3290805	4	Nut M8	
24	3291005	AR	Nut M10	
25	3422532	1	Pin	
26	3790012	1	O-Ring	
27	3841143	1	Keeper, Pin	
28	4240099	AR	Tie-Strap (Not Shown)	
29	4711500	1	Washer, 5/16	
30	4811700	2	Washer, M6	
31	4811900	6	Washer, M8	
32	4812000	AR	Washer M10	
33	4812100	2	Washer M12	
34	5240800	2	Washer, M8 Hardened	
35	5251215	1	Bolt M12 x 35	
36	5261200	1	Nut, Flange M12 Class10	
37	1001217785	2	Clamp, Muffler	
38	1001119278	1	Insulate	
39	1001135196	1	Pin	
40	1001150918	1	Cable, Extension Cord	
41	1001155044	2	Nut, Special 15/32	
42	1001156107	2	Holder, Cable **(SN 0300203771 through 0300229351)**	
43	1001161710	1	Switch, Toggle	
44	1001167512	1	Bracket, Engine Tray Stow	
45	1001174486	2	Clamp	
46	1001188972	1	Heater, Hydraulic Tank	
47	1001212257	1	Cable, Kubota Alternator	
48	1001213062	1	Cable, Battery Cable Kit Kubota	

ITEM	PART NUMBER	QTY	DESCRIPTION	REV
49	1001213599	1	Harness Engine - Kubota Engine (Not Shown - See ELECTRICAL SECTION for Breakdown)	
50	1001214502	1	Pipe, Tail Pipe	
51	1001215259	1	Plate, Engine Lock	
52	1001215801	1	Mount, Fuel System (Kubota)	
53	1001216080	2	Cable, Extension Cord	
54	1001156819	20.9 in/ 53cm	Hose	
55	1001216396	1	Hose	
56	1001216397	1	Hose	
57	1001216399	1	Hose	
58	1001216827	1	Engine and Pump Sub-Assembly - Kubota Engine (With Arctic Package) (See ENGINE AND PUMP SUB-ASSEMBLY - KUBOTA ENGINE (WITH ARCTIC PACKAGE) for Breakdown)	
59	1001118972	3	Nut, Special M10 x 1.5	
60	1321716	1	Clamp **(SN 0300203771 through 0300229351)**	
60	1001195039	1	Clamp **(SN 0300229352 through 0300241777)**	
61	1001217494	2	Capscrew M12	
62	1001219348	1	Hose **(SN 0300203771 through 0300237483)**	
63	4812200	AR	Washer, M14	
64	24431386	1	Support, Clamp **(SN 0300229352 through 0300241777)**	
65	1001217345	AR	Bolt M14 x 30	
66	1001229798	1	Harness - Kubota B6 D/F Power (Not Shown - See ELECTRICAL SECTION for Breakdown)	
67	4460466	8	Terminal, Sealing Plug (Not Shown)	
68	4460930	1	Plug, Male - 8 Position (Deutsch) (Not Shown)	

FIGURE 3-42. ENGINE INSTALLATION - KUBOTA ENGINE (WITH ARCTIC PACKAGE) (SN 0300241778 through 0300272360)

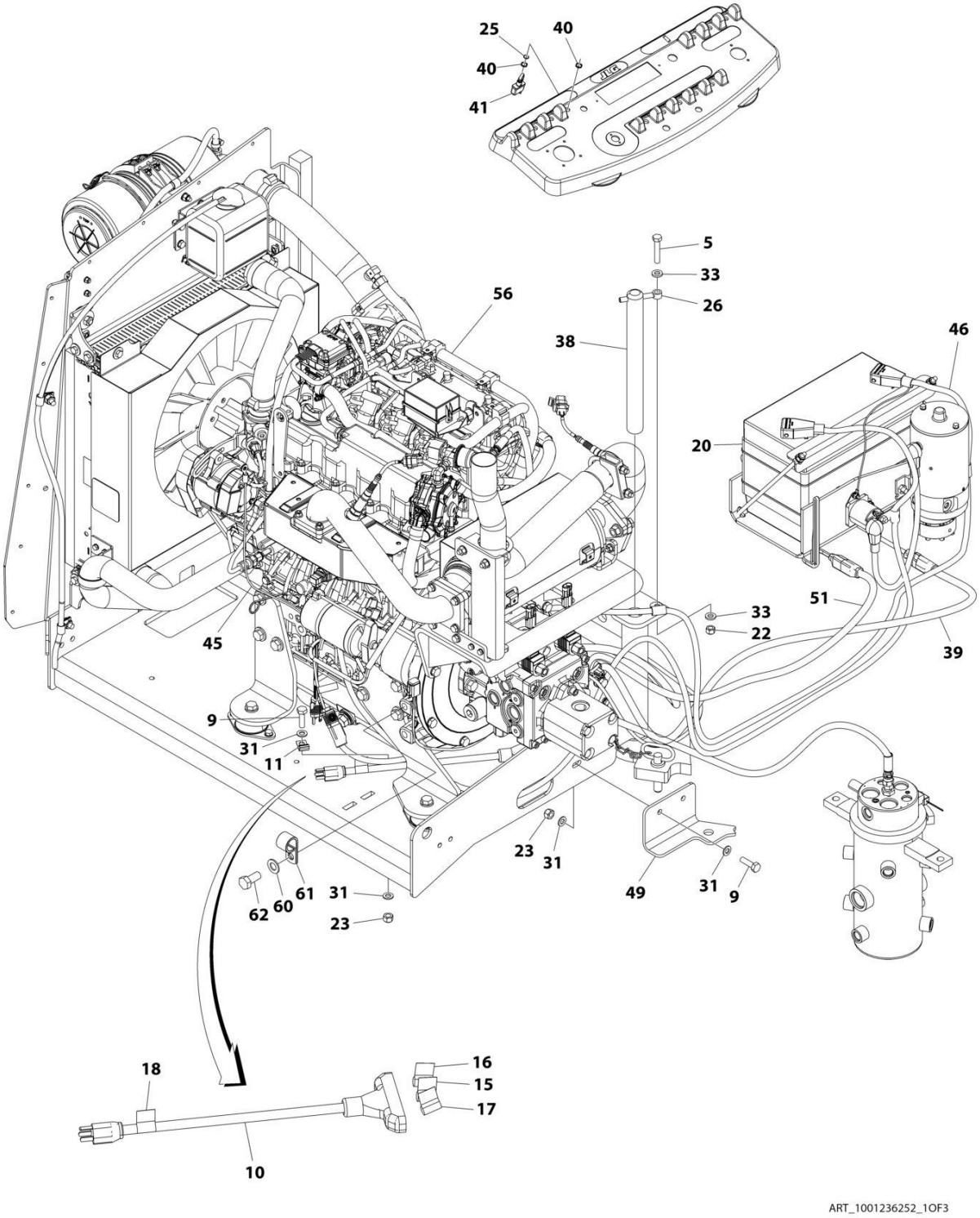

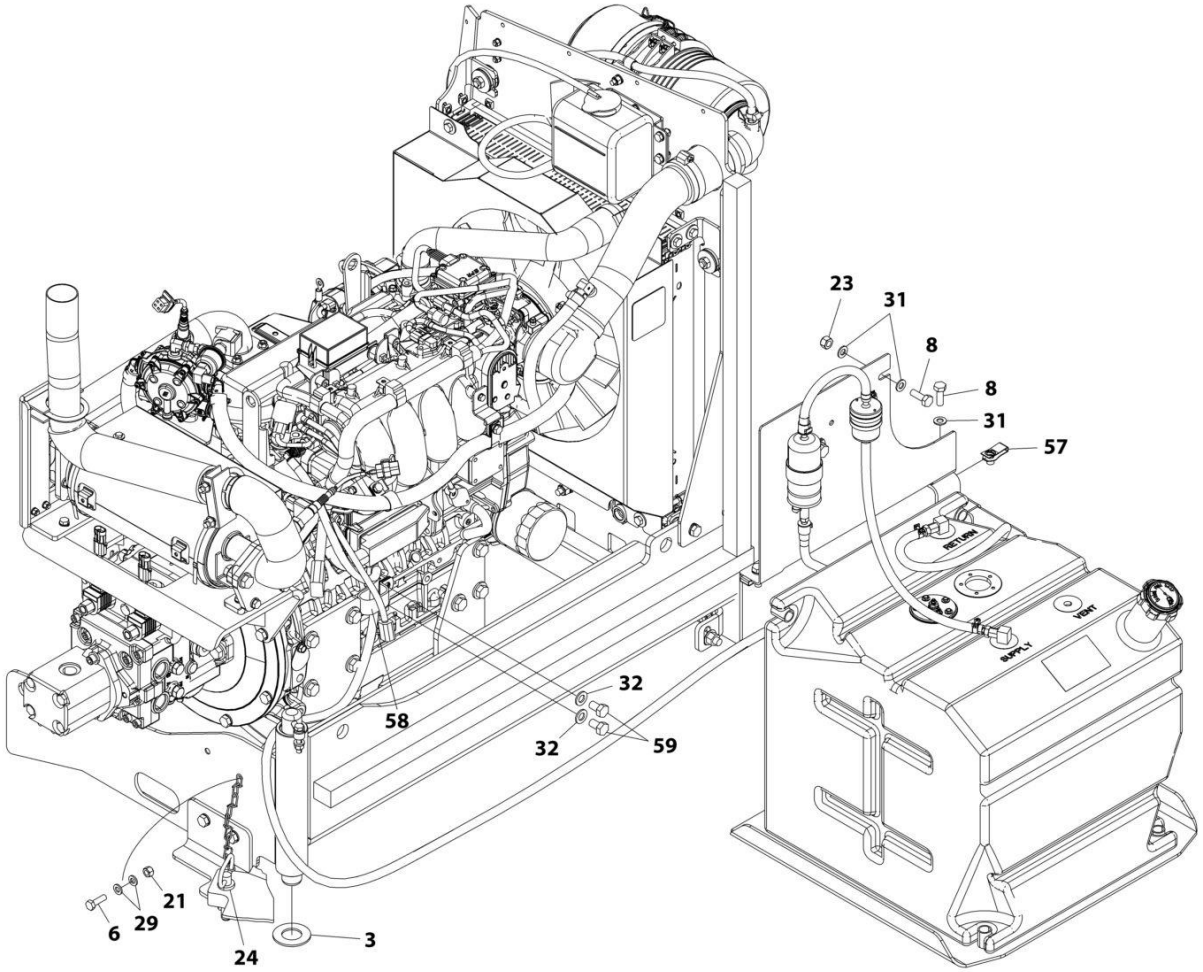

ART_1001236252_2OF3

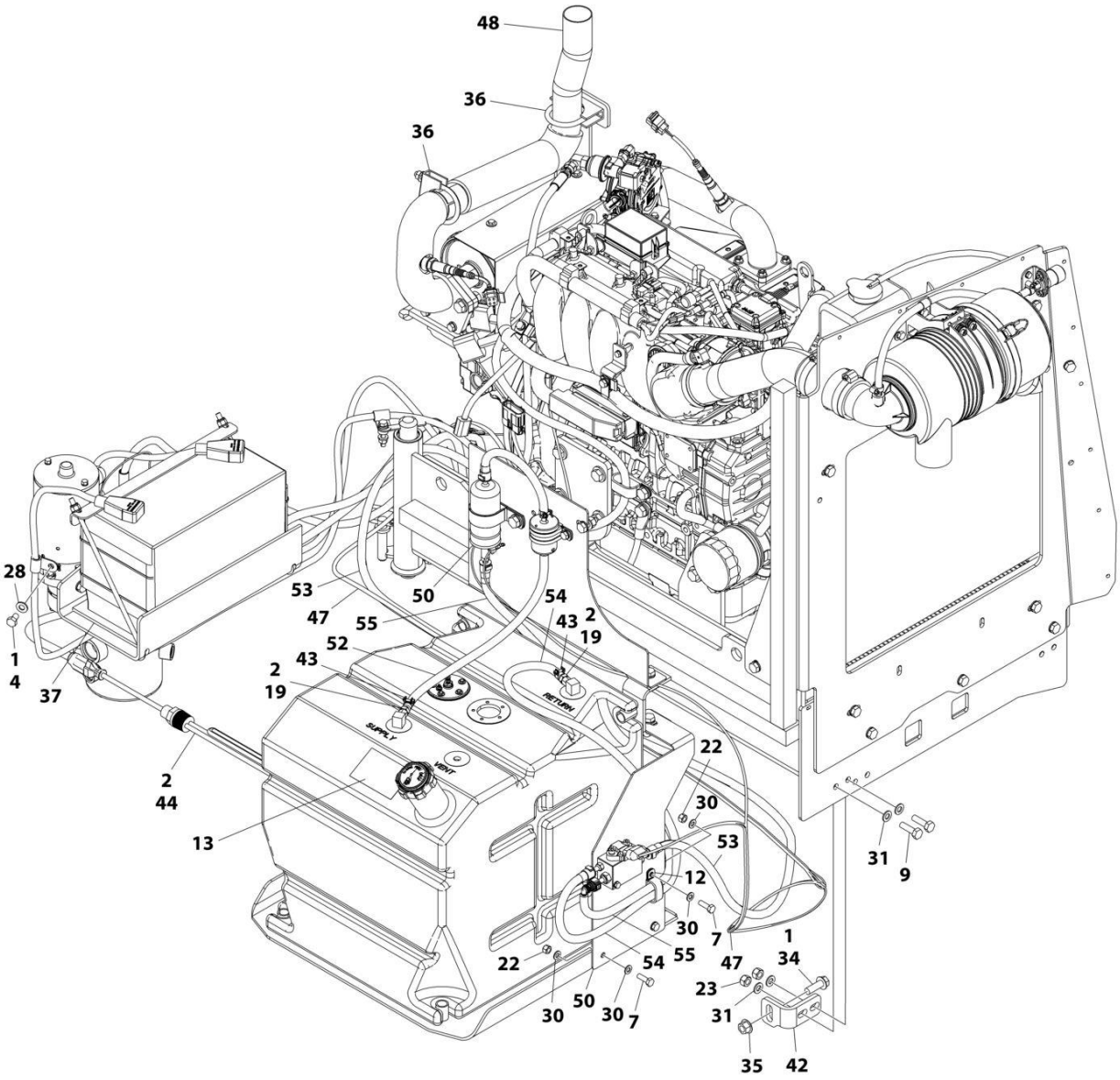

ART_1001236252_3OF3

FIGURE 3-42. ENGINE INSTALLATION - KUBOTA ENGINE (WITH ARCTIC PACKAGE) (SN 0300241778 through 0300272360)

ITEM	PART NUMBER	QTY	DESCRIPTION	REV
	1001236252	Ref	ENGINE INSTALLATION - KUBOTA ENGINE (WITH ARCTIC PACKAGE)	A
1	0100011	AR	Compound, Locking	
2	0100020	AR	Sealant, Pipe	
3	0440162	1	Bearing	
4	0641504	1	Bolt, 5/16 x 1/2	
5	0700817	1	Bolt M8 x 45	
6	0760610	1	Bolt M6 x 20	
7	0760812	3	Bolt M8 x 25	
8	0761014	4	Bolt M10 x 30	
9	0761015	5	Bolt M10 x 35	
10	1060626	1	Plug, 3 Way	
11	1320223	1	Clamp	
12	1321283	1	Clamp	
13	1701542	2	Decal - Gas	
14	1701543	1	Decal - LPG (Not Shown)	
15	1702941	1	Decal - Battery Heater	
16	1702942	1	Decal - Engine Block Heater	
17	1702943	1	Decal - Hydraulic Tank Heater	
18	1702944	1	Decal - Heater Cord	
19	2180348	2	Fitting, Barbed	
20	2580024	1	Heater, Battery	
21	3290605	1	Nut, Lock M6 x 1	
22	3290805	4	Nut, Lock M8 x 1.25	
23	3291005	6	Nut, Lock M10 x 1.5	
24	3422532	1	Pin	
25	3790012	1	O-Ring	
26	3841143	1	Keeper, Pin	
27	4240099	AR	Tie-Strap (Not Shown)	
28	4711500	1	Washer, 5/16	
29	4811700	2	Washer, M6	
30	4811900	6	Washer, M8	
31	4812000	15	Washer M10	
32	4812100	2	Washer M12	
33	5240800	2	Washer, M8 Hardened	
34	5251215	1	Bolt M12 x 35	
35	5261200	1	Nut, Flange M12 Class10	
36	1001217785	2	Clamp, Muffler	
37	1001119278	1	Insulate	
38	1001135196	1	Pin	
39	1001150918	1	Cable, Extension Cord	
40	1001155044	2	Nut, Special 15/32	
41	1001161710	1	Switch, Toggle	
42	1001167512	1	Bracket, Engine Tray Stow	
43	1001174486	2	Clamp	
44	1001188972	1	Heater, Hydraulic Tank	
45	1001212257	1	Cable, Kubota Alternator	
46	1001213062	1	Cable, Battery Cable Kit Kubota	
47	1001213599	1	Harness Engine - Kubota Engine (See ELECTRICAL SECTION for	

ITEM	PART NUMBER	QTY	DESCRIPTION	REV
			Breakdown)	
48	1001214502	1	Pipe, Tail Pipe	
49	1001215259	1	Plate, Engine Lock	
50	1001215801	1	Mount, Fuel System (Kubota)	
51	1001216080	2	Cable, Extension Cord	
52	1001156819	20.9 in/ 53cm	Hose	
53	1001216396	1	Hose	
54	1001216397	1	Hose	
55	1001216399	1	Hose	
56	1001236258	1	Engine and Pump Sub-Assembly - Kubota Engine (With Arctic Package) (See ENGINE AND PUMP SUB-ASSEMBLY - KUBOTA ENGINE (WITH ARCTIC PACKAGE) for Breakdown)	
57	1001118972	3	Nut, Special M10 x 1.5	
58	1001195039	1	Clamp	
59	1001217494	2	Capscrew M12	
60	4812200	1	Washer, M14	
61	24431386	1	Support, Clamp	
62	1001217345	1	Bolt M14 x 30	
63	1001229798	1	Harness - Kubota B6 D/F Power (Not Shown - See ELECTRICAL SECTION for Breakdown)	
64	4460466	8	Terminal, Sealing Plug (Not Shown)	
65	4460930	1	Plug, Male - 8 Position (Deutsch) (Not Shown)	

FIGURE 3-43. ENGINE AND PUMP SUB-ASSEMBLY - KUBOTA ENGINE (WITH ARCTIC PACKAGE) (SN 0300203771 through 0300241777)

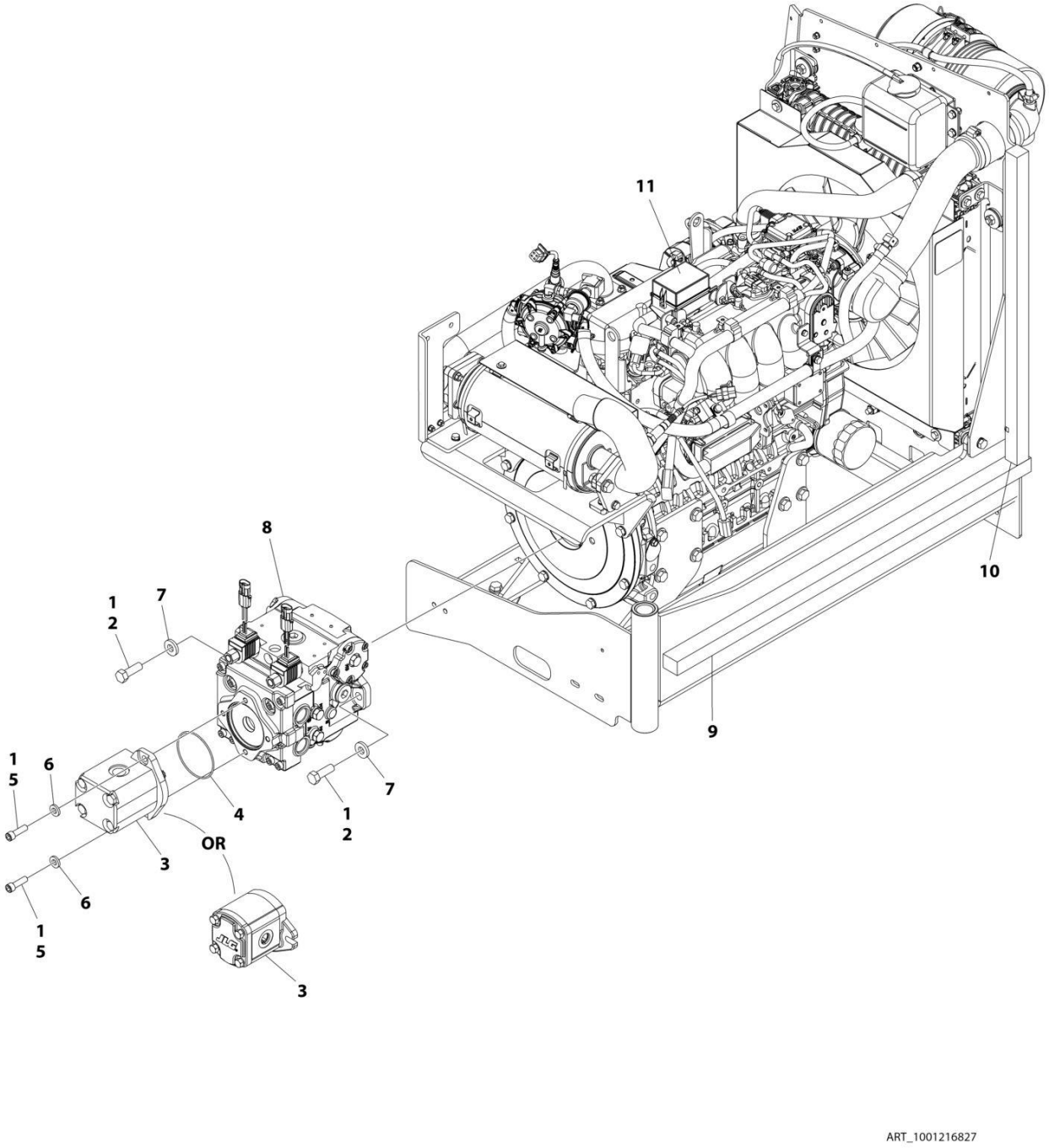

FIGURE 3-43. ENGINE AND PUMP SUB-ASSEMBLY - KUBOTA ENGINE (WITH ARCTIC PACKAGE) (SN 0300203771 through 0300241777)

ITEM	PART NUMBER	QTY	DESCRIPTION	REV
	1001216827	Ref	ENGINE AND PUMP SUB-ASSEMBLY - KUBOTA ENGINE (WITH ARCTIC PACKAGE)	E
1	0100011	AR	Compound, Locking	
2	0641812	2	Bolt 1/2 x 1-1/2	
3	3600242	1	Gear Pump Assembly (See GEAR PUMP ASSEMBLY for Breakdown) **(SN 0300203771 through 0300237045)**	
3	1001214207	1	Gear Pump Assembly **(SN 0300237046 through 0300241777)**	
3	70006356	1	Seal Kit - 1001214207 Pump	
4	3790152	1	O-Ring	
5	3931620	AR	Capscrew 3/8 x 1-1/4	
5	3931618	AR	Capscrew 3/8 x 1-1/8	
6	4891600	2	Washer 3/8	
7	4891800	2	Washer 1/2	
8	1001167036	1	Piston Pump Assembly (See PISTON PUMP ASSEMBLY for Breakdown)	
9	1001171953	1	Seal	
10	1001171954	1	Seal	
11	1001216826	1	Engine Assembly - Kubota Engine (With Arctic Package) (See ENGINE ASSEMBLY - KUBOTA ENGINE (WITH ARCTIC PACKAGE) for Breakdown)	

FIGURE 3-44. ENGINE AND PUMP SUB-ASSEMBLY - KUBOTA ENGINE (WITH ARCTIC PACKAGE) (SN 0300241778 through 0300272360)

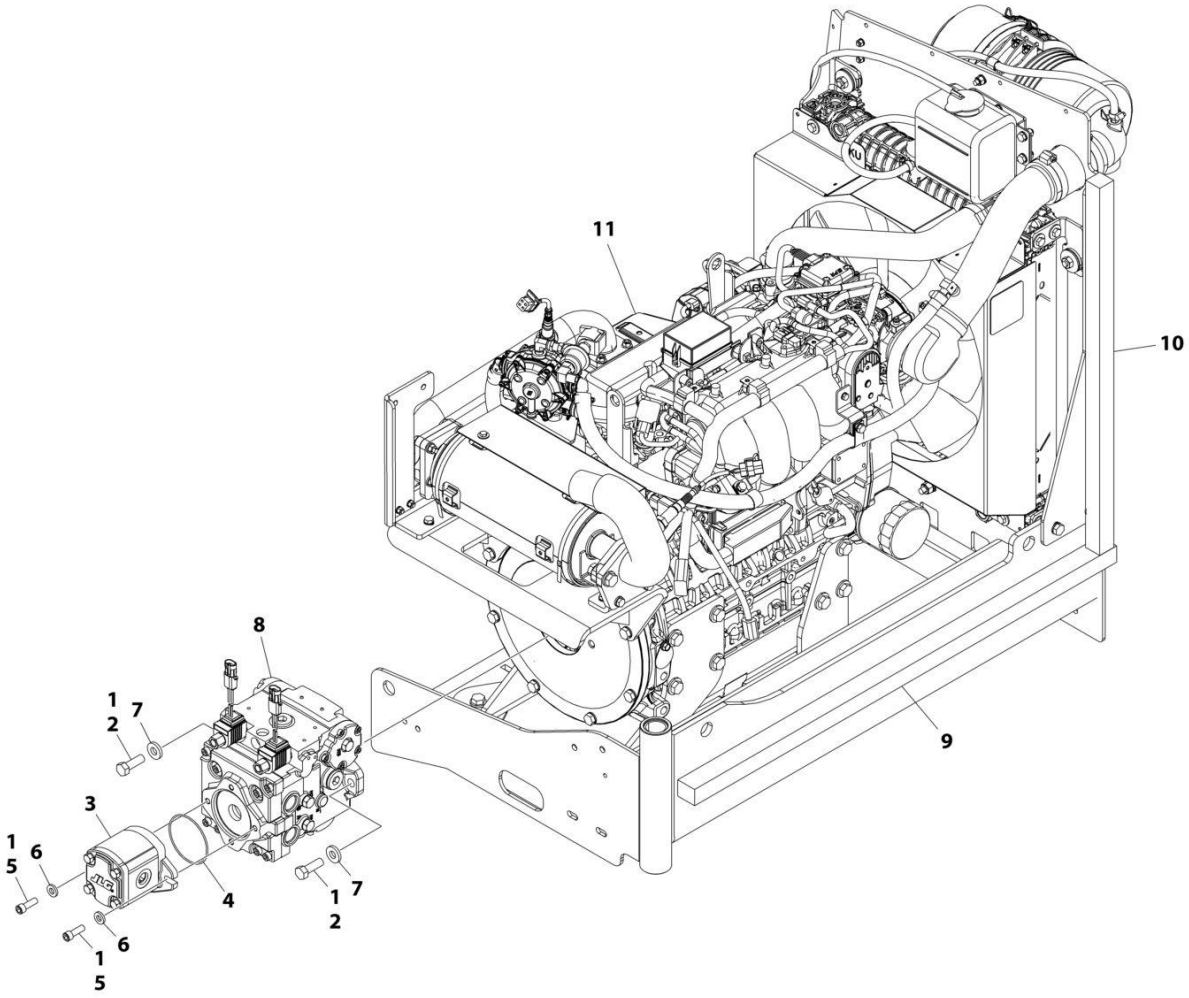

FIGURE 3-44. ENGINE AND PUMP SUB-ASSEMBLY - KUBOTA ENGINE (WITH ARCTIC PACKAGE) (SN 0300241778 through 0300272360)

ITEM	PART NUMBER	QTY	DESCRIPTION	REV
	1001236258	Ref	ENGINE AND PUMP SUB-ASSEMBLY - KUBOTA ENGINE (WITH ARCTIC PACKAGE)	A
1	0100011	AR	Compound, Locking	
2	0641812	2	Bolt 1/2 x 1-1/2	
3	1001214207	1	Gear Pump Assembly	
3	70006356	1	Seal Kit - 1001214207 Pump	
4	3790152	1	O-Ring	
5	3931618	2	Capscrew 3/8 x 1-1/8	
6	4891600	2	Washer 3/8	
7	4891800	2	Washer 1/2	
8	1001167036	1	Piston Pump Assembly (See PISTON PUMP ASSEMBLY for Breakdown)	
9	1001171953	1	Seal	
10	1001171954	1	Seal	
11	1001236259	1	Engine Assembly - Kubota Engine (With Arctic Package) (See ENGINE ASSEMBLY - KUBOTA ENGINE (WITH ARCTIC PACKAGE) for Breakdown)	

FIGURE 3-45. ENGINE ASSEMBLY - KUBOTA ENGINE (WITH ARCTIC PACKAGE) (SN 0300203771 through 0300241777)

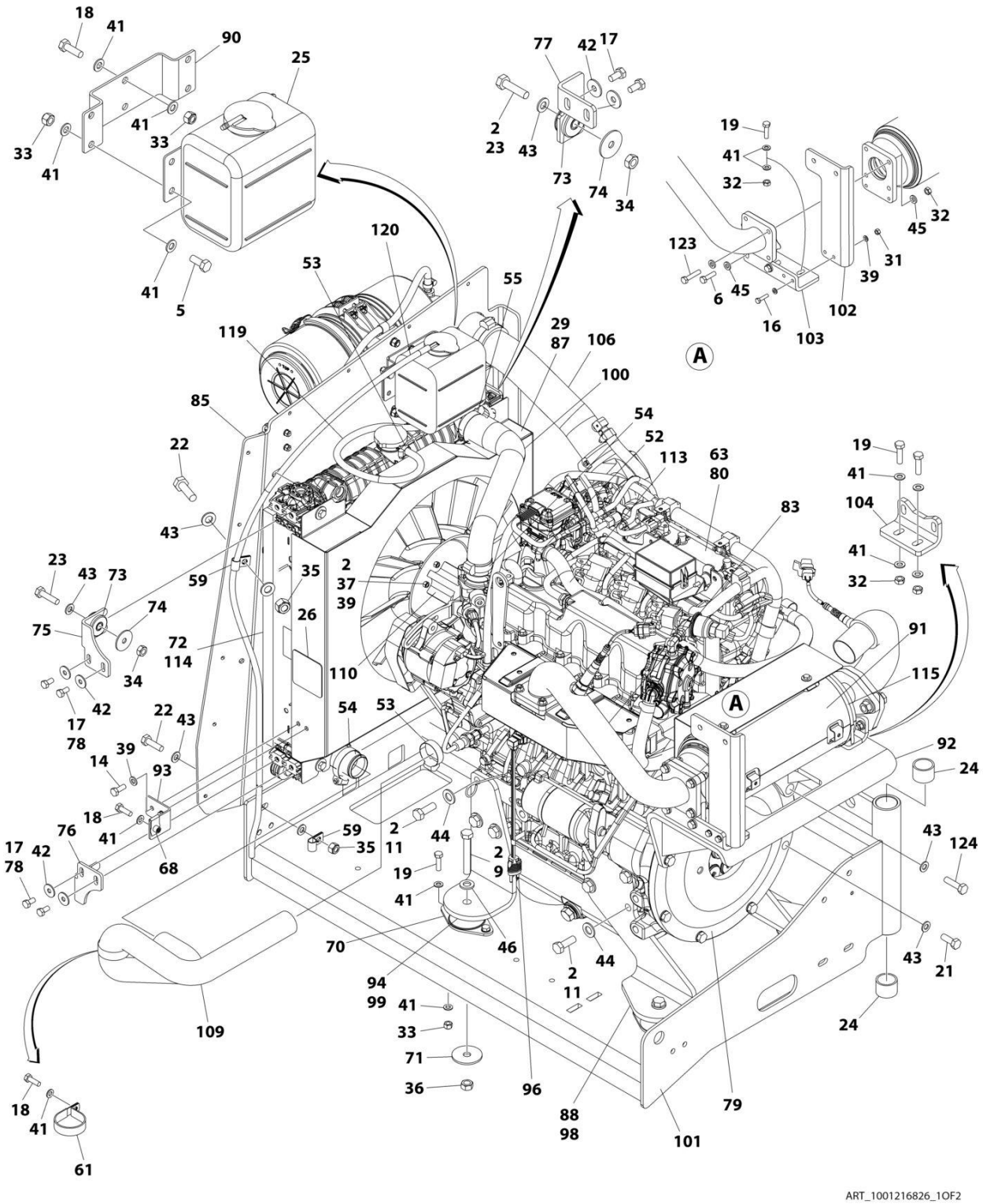

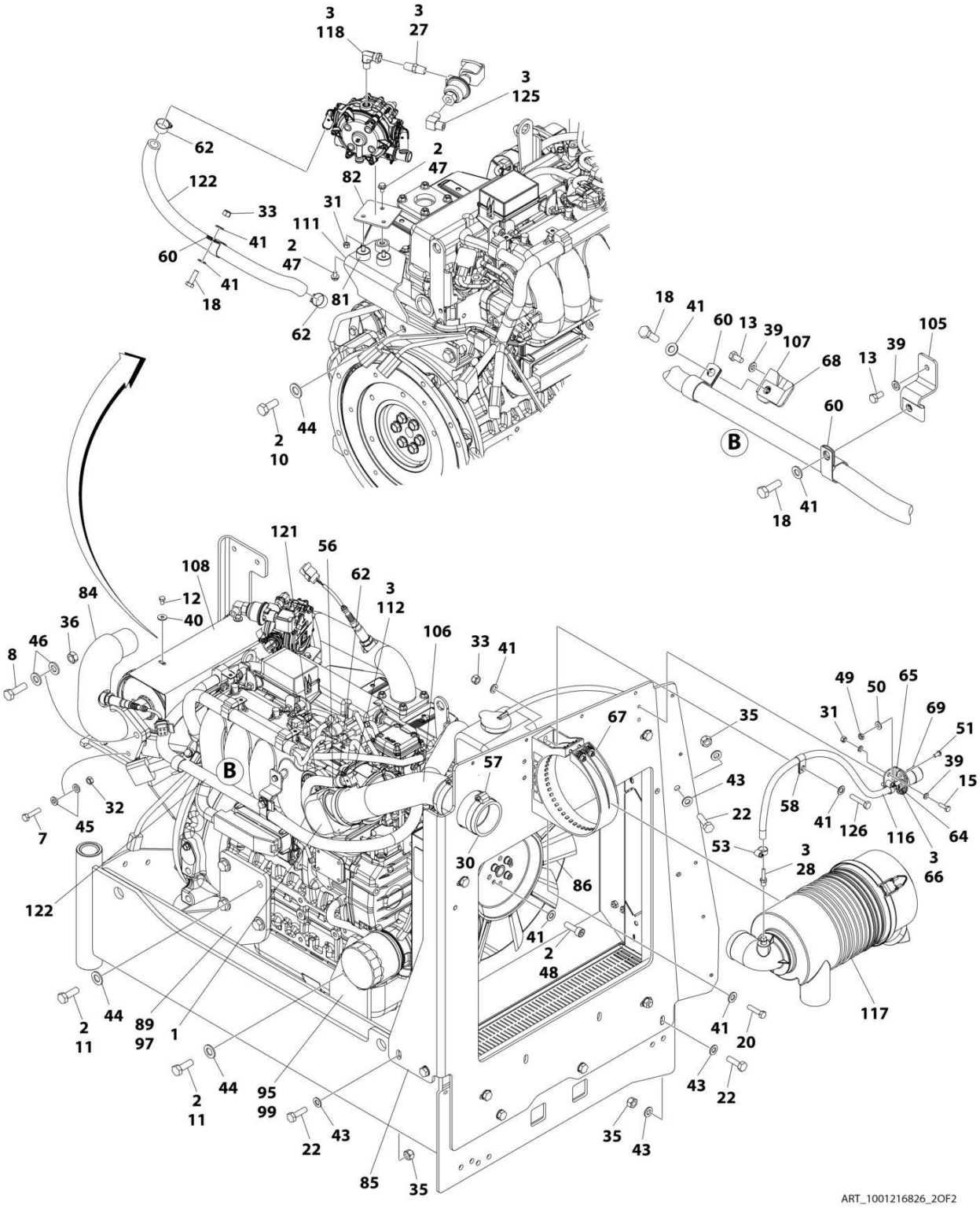
3
118
3
27
3
125
62
2
47
122
82
33
31
111
41
2
47
60
41
18
81
62
44
2
10
18
41
60
13
39
107
68
13
39
105
60
B
41
18
121
56
108
62
3
112
84
12
40
36
106
33
41
46
8
49
50
65
69
31
35
67
51
39
15
57
B
43
58
41
126
116
64
32
45
7
22
53
3
28
3
66
30
86
122
41
2
48
117
2
11
44
89
97
1
41
20
2
11
44
95
99
43
22
22
43
35
43
85
35
ART_1001216826_2OF2

FIGURE 3-45. ENGINE ASSEMBLY - KUBOTA ENGINE (WITH ARCTIC PACKAGE) (SN 0300203771 through 0300241777)

ITEM	PART NUMBER	QTY	DESCRIPTION	REV
	1001216826	Ref	ENGINE ASSEMBLY - KUBOTA ENGINE (WITH ARCTIC PACKAGE)	E
1	0080201	1	Adapter, 90	
2	0100011	AR	Compound, Locking	
3	0100020	AR	Sealant, Pipe	
5	0700810	4	Bolt M8 x 20	
6	0700814	2	Bolt M8 x 30	
7	0700815	2	Bolt M8 x 35	
8	0701216	2	Bolt M12 x 40	
9	0701224	4	Bolt M12 x 80	
10	0711214	AR	Bolt M12 x 30	
10	1001217494	AR	Bolt M12 x 20	
11	1001217343	14	Bolt M12 x 35	
12	0760605	4	Bolt M6 x 10	
13	0760606	2	Bolt M6 x 12	
14	0760608	2	Bolt M6 x 16	
15	0760610	2	Bolt M6 x 20	
16	0760612	2	Bolt M6 x 25	
17	0760808	8	Bolt M8 x 16	
18	0760812	6	Bolt M8 x 25	
19	0760814	12	Bolt M8 x 30	
20	0760815	AR	Bolt M8 x 35	
21	0761014	4	Bolt M10 x 30	
22	0761015	6	Bolt M10 x 35	
23	0761016	4	Bolt M10 x 40	
24	0961951	2	Bushing	
25	1580011	1	Container, Coolant Overflow	
26	1703162	2	Decal - Caution Fan	
27	2220261	1	Fitting, Nipple NPTF/NPTF	
28	2220315	1	Fitting, Barbed	
29	2300041	2.2 gal/ 8.5L	Coolant, Anti-Freeze	
30	2720644	1	Hose	
31	3290607	5	Nut M6	
32	3290801	10	Nut M8	
33	3290805	17	Nut M8	
34	3291001	4	Nut M10	
35	3291005	6	Nut M10	
36	3291201	6	Nut M12	
37	4031711	4	Bolt M6 x 35	
38	4240099	AR	Tie-Strap (Not Shown)	
39	4811700	16	Washer, M6	
40	4811702	4	Washer, M6	
41	4811900	49	Washer, M8	
42	4811902	8	Washer, M8	
43	4812000	24	Washer, M10	
44	4812200	AR	Washer, M14	
44	5241400	AR	Washer, M14	
45	5240800	14	Washer, M8	

ITEM	PART NUMBER	QTY	DESCRIPTION	REV
46	5241200	8	Washer, M12	
47	5250605	3	Bolt M6 x 10	
48	5271809	4	Bolt M8 x 25	
49	8305401	2	Nut, Jam .250-20	
50	8307109	2	Washer, .250	
51	8310548	2	Screw 1/4 x 1/2	
52	8405007	2	Clamp **(SN 0300203771 through 0300228655)**	
52	1001173535	2	Clamp **(SN 0300228656 through 0300241777)**	
53	8405009	4	Clamp	
54	8405102	2	Clamp	
55	8405104	2	Clamp	
56	8405202	1	Clamp	
57	8405203	3	Clamp	
58	8406109	1	Clip	
59	8406110	2	Clip	
60	8406201	3	Clip	
61	8410001	1	Clamp	
62	8410009	6	Clamp	
63	1001190775	10 qt/ 9.4L	Oil, Engine	
64	1001138173	1	Support, Service Indicator	
65	1001138175	1	Bracket, Service Indicator	
66	1001141995	1	Fitting, Barbed	
67	1001147812	1	Clamp, Air Cleaner	
68	1001149160	3	Nut M8	
69	1001149639	1	Indicator, Air Intake	
70	1001166718	4	Isolator, Engine Mount	
71	1001168018	4	Washer, Snubbing	
72	1001168166	2	Seal	
73	1001169054	4	Isolator, Radiator	
74	1001169138	4	Washer, Snubbing	
75	1001169967	2	Bracket	
76	1001170035	1	Bracket	
77	1001176330	1	Bracket	
78	1001180620	AR	Adhesive	
79	1001209844	1	Pump Coupling Kit (See PUMP COUPLING KIT for Breakdown)	
80	1001210763	1	Engine, Kubota	
81	1001211794	3	Mount	
82	1001211797	1	Mount	
83	1001212989	1	Pipe, Exhaust (Inlet)	
84	1001212993	1	Pipe, Exhaust (Outlet)	
85	1001213305	1	Plate, Mounting	
86	1001213357	1	Fan	
87	1001213423	1	Radiator	
88	1001213425	1	Plate, Engine Mount (Left Rear)	
89	1001213426	1	Plate, Engine Mount (Right Rear)	
90	1001213482	1	Bracket	
91	1001213824	1	Insulation	
92	1001214138	1	Bracket	
93	1001214205	1	Support	
94	1001214233	1	Plate (Front Left)	
95	1001214234	1	Plate (Front Right)	

ITEM	PART NUMBER	QTY	DESCRIPTION	REV
96	1001214269	1	Heater, Block	
97	1001214276	1	Shim	
98	1001214277	1	Shim	
99	1001214278	2	Shim	
100	1001214307	1	Hose	
101	1001214508	1	Support	
102	1001214553	1	Support	
103	1001214555	1	Bracket	
104	1001214556	1	Bracket	
105	1001214558	1	Bracket	
106	1001214598	1	Tube	
107	1001214599	1	Bracket	
108	1001214664	1	Cover	
109	1001214694	1	Hose	
110	1001214729	1	Spacer	
111	1001214841	1	Bracket	
112	1001215125	1	Fitting, 90	
113	1001215869	1	Hose	
114	1001216825	2	Seal	
115	1001137336	2	Strap	
116	1001138248	2 ft/0.6m	Tube	
117	1001147813	1	Air Cleaner Assembly Including Filter Element	
117	70004020	1	Element, Filter (Not Shown)	
118	2220064	1	Fitting, 90 FSNPSM/NPTF	
119	2720058	1.8 ft/ 0.5m	Hose	
120	2720271	4 ft/1.2m	Hose	
121	2720615	1.2 ft/ 0.4m	Hose	
122	82033995	5.5 ft/ 1.7m	Hose	
123	0700816	4	Bolt M8 x 40	
124	0701016	4	Bolt M10 x 40	
125	2180504	1	Fitting, Barbed	
126	0760816	AR	Bolt M8 x 40	

FIGURE 3-46. ENGINE ASSEMBLY - KUBOTA ENGINE (WITH ARCTIC PACKAGE) (SN 0300241778 through 0300272360)

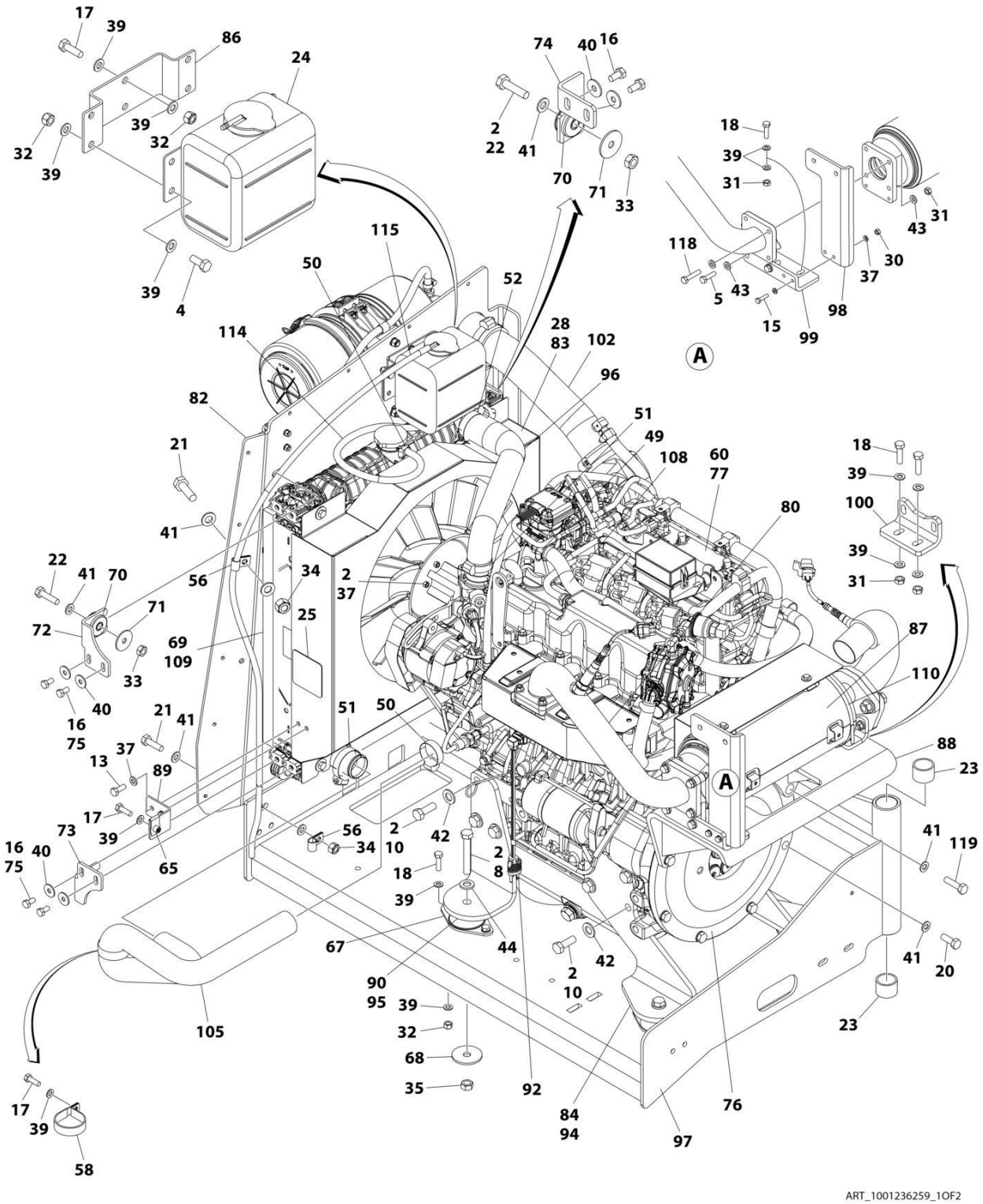

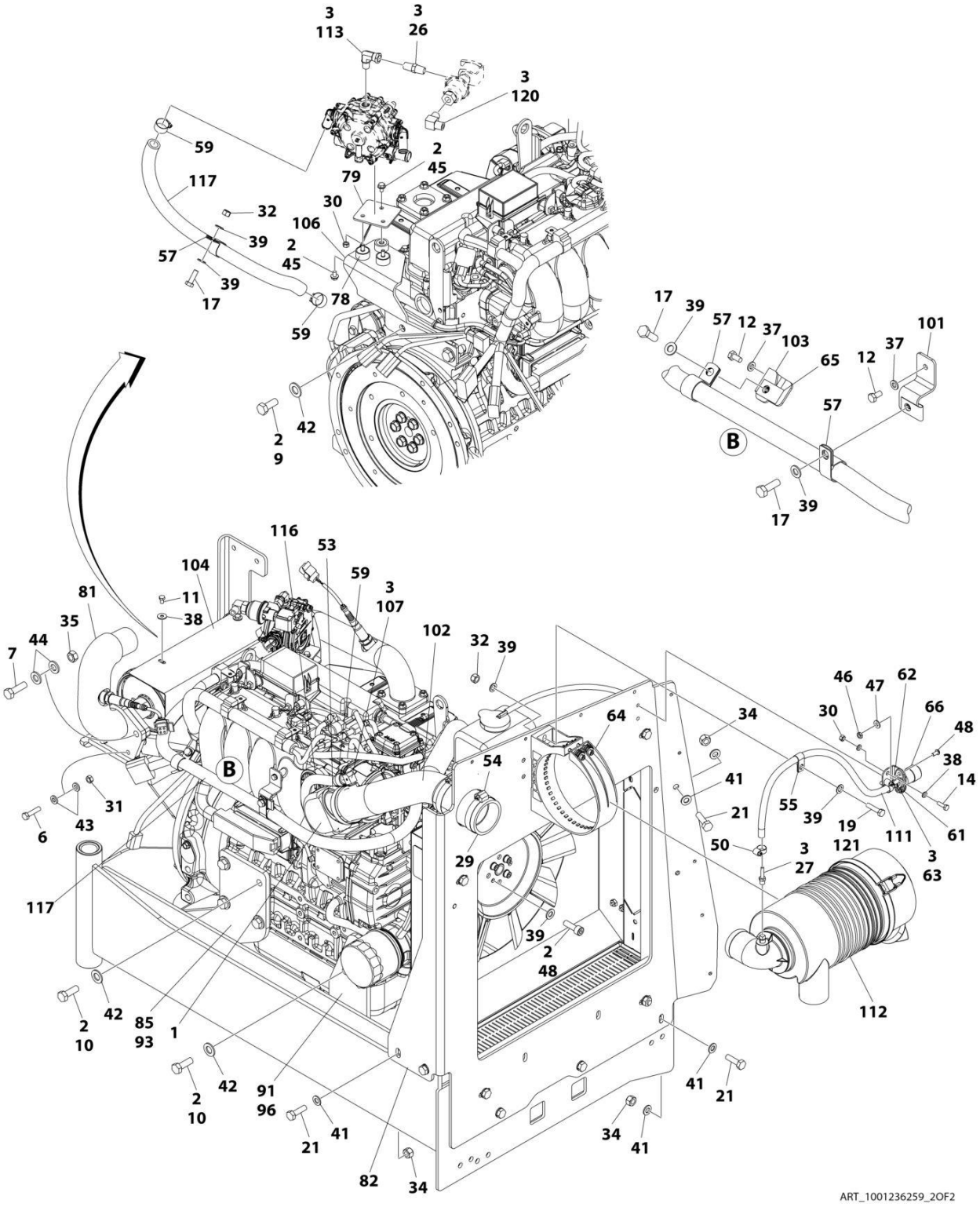
3
113
3
26
3
120
59
117
32
39
57
39
17
2
45
79
30
106
2
45
78
59
42
2
9
17
39
57
12
37
103
65
12
37
101
57
B
39
17
116
53
104
59
3
107
81
11
38
35
44
7
102
32
39
46
47
62
66
48
30
34
64
38
14
B
54
41
31
43
6
21
55
39
19
111
61
50
3
121
3
27
63
29
117
39
2
48
112
2
10
42
85
93
1
2
10
42
91
96
41
21
21
41
34
41
82
34
ART_1001236259_2OF2

FIGURE 3-46. ENGINE ASSEMBLY - KUBOTA ENGINE (WITH ARCTIC PACKAGE) (SN 0300241778 through 0300272360)

ITEM	PART NUMBER	QTY	DESCRIPTION	REV
	1001236259	Ref	ENGINE ASSEMBLY - KUBOTA ENGINE (WITH ARCTIC PACKAGE)	A
1	0080201	1	Adapter, 90	
2	0100011	AR	Compound, Locking	
3	0100020	AR	Sealant, Pipe	
4	0700810	4	Bolt M8 x 20	
5	0700814	2	Bolt M8 x 30	
6	0700815	2	Bolt M8 x 35	
7	0701216	2	Bolt M12 x 40	
8	0701224	4	Bolt M12 x 80	
9	1001217494	2	Bolt M12 x 20	
10	1001217343	14	Bolt M12 x 35	
11	0760605	4	Bolt M6 x 10	
12	0760606	2	Bolt M6 x 12	
13	0760608	2	Bolt M6 x 16	
14	0760610	2	Bolt M6 x 20	
15	0760612	2	Bolt M6 x 25	
16	0760808	8	Bolt M8 x 16	
17	0760812	6	Bolt M8 x 25	
18	0760814	12	Bolt M8 x 30	
19	0760815	1	Bolt M8 x 35	
20	0761014	4	Bolt M10 x 30	
21	0761015	6	Bolt M10 x 35	
22	0761016	4	Bolt M10 x 40	
23	0961951	2	Bushing	
24	1580011	1	Container, Coolant Overflow	
25	1703162	2	Decal - Caution Fan	
26	2220261	1	Fitting, Nipple NPTF/NPTF	
27	2220315	1	Fitting, Barbed	
28	2300041	2.2 gal/ 8.5L	Coolant, Anti-Freeze	
29	2720644	1	Hose	
30	3290607	5	Nut M6 x 1	
31	3290801	10	Nut M8	
32	3290805	17	Nut M8 x 1.25	
33	3291001	4	Nut M10 x 1.5	
34	3291005	6	Nut M10 x 1.5	
35	3291201	6	Nut M12	
36	4240099	AR	Tie-Strap (Not Shown)	
37	4811700	16	Washer M6	
38	4811702	4	Washer M6	
39	4811900	45	Washer M8	
40	4811902	8	Washer M8	
41	4812000	24	Washer M10	
42	5241400	16	Washer M14	
43	5240800	14	Washer M8	
44	5241200	8	Washer M12	
45	5250605	3	Bolt M6 x 10	
46	8305401	2	Nut, Jam .250-20	

ITEM	PART NUMBER	QTY	DESCRIPTION	REV
47	8307109	2	Washer, .250	
48	8310548	2	Screw 1/4 x 1/2	
49	1001173535	2	Clamp	
50	8405009	4	Clamp	
51	8405102	2	Clamp	
52	8405104	2	Clamp	
53	8405202	1	Clamp	
54	8405203	3	Clamp	
55	8406109	1	Clip	
56	8406110	2	Clip	
57	8406201	3	Clip	
58	8410001	1	Clamp	
59	8410009	6	Clamp	
60	1001190775	10 qt/ 9.4L	Oil, Engine	
61	1001138173	1	Support, Service Indicator	
62	1001138175	1	Bracket, Service Indicator	
63	1001141995	1	Fitting, Barbed	
64	1001147812	1	Clamp, Air Cleaner	
65	1001149160	3	Nut M8	
66	1001149639	1	Indicator, Air Intake	
67	1001166718	4	Isolator, Engine Mount	
68	1001168018	4	Washer, Snubbing	
69	1001168166	2	Seal	
70	1001169054	4	Isolator, Radiator	
71	1001169138	4	Washer, Snubbing	
72	1001169967	2	Bracket	
73	1001170035	1	Bracket	
74	1001176330	1	Bracket	
75	1001180620	AR	Adhesive	
76	1001209844	1	Pump Coupling Kit (See Separate Breakdown in this Section)	
77	1001236393	1	Engine, Kubota (See Separate Breakdown in this Section)	
78	1001211794	3	Mount	
79	1001211797	1	Mount	
80	1001212989	1	Pipe, Exhaust (Inlet)	
81	1001212993	1	Pipe, Exhaust (Outlet)	
82	1001213305	1	Plate, Mounting	
83	1001236257	1	Radiator	
84	1001213425	1	Plate, Engine Mount (Left Rear)	
85	1001213426	1	Plate, Engine Mount (Right Rear)	
86	1001213482	1	Bracket	
87	1001213824	1	Insulation	
88	1001214138	1	Bracket	
89	1001214205	1	Support	
90	1001214233	1	Plate (Front Left)	
91	1001214234	1	Plate (Front Right)	
92	1001214269	1	Heater, Block	
93	1001214276	1	Shim	
94	1001214277	1	Shim	
95	1001214278	2	Shim	
96	1001214307	1	Hose	
97	1001214508	1	Support	

ITEM	PART NUMBER	QTY	DESCRIPTION	REV
98	1001214553	1	Support	
99	1001214555	1	Bracket	
100	1001214556	1	Bracket	
101	1001214558	1	Bracket	
102	1001214598	1	Tube	
103	1001214599	1	Bracket	
104	1001214664	1	Cover	
105	1001214694	1	Hose	
106	1001214841	1	Bracket	
107	1001215125	1	Fitting, 90	
108	1001215869	1	Hose	
109	1001216825	2	Seal	
110	1001137336	2	Strap	
111	1001138248	2 ft/ 0.6m	Tube	
112	1001147813	1	Air Cleaner Assembly Including Filter Element	
112	70004020	1	Element, Filter (Not Shown)	
113	2220064	1	Fitting, 90 FSNPSM/NPTF	
114	2720058	1.8 ft/ 0.5m	Hose	
115	2720271	4 ft/ 1.2m	Hose	
116	2720615	1.2 ft/ 0.4m	Hose	
117	82033995	5.5 ft/ 1.7m	Hose	
118	0700816	4	Bolt M8 x 40	
119	0701016	4	Bolt M10 x 40	
120	2180504	1	Fitting, Barbed	
121	0760816	1	Bolt M8 x 40	

FIGURE 3-47. ENGINE COMPONENTS - KUBOTA

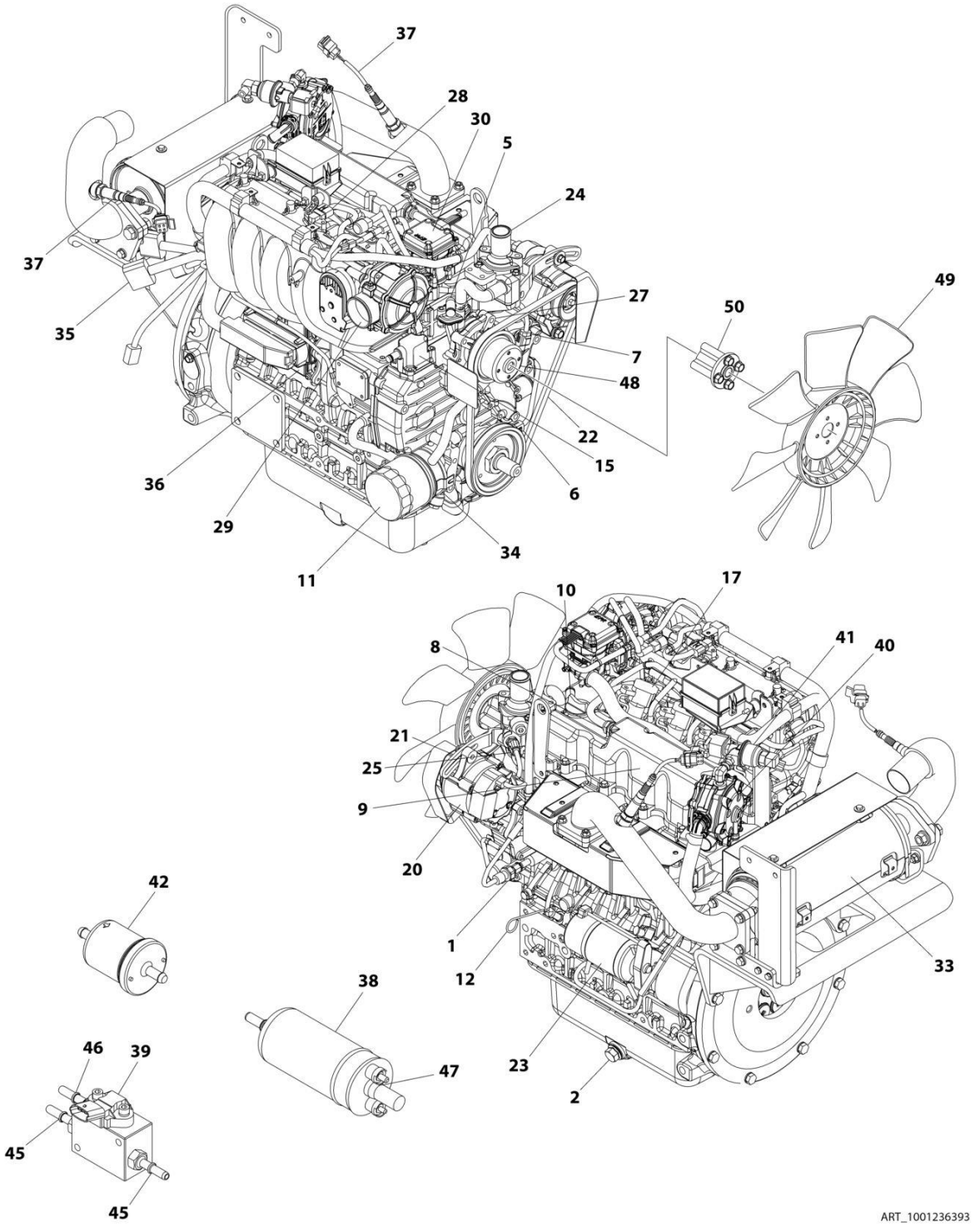

FIGURE 3-47. ENGINE COMPONENTS - KUBOTA

ITEM	PART NUMBER	QTY	DESCRIPTION	REV
	1001236393	Ref	ENGINE COMPONENTS - KUBOTA	B
1	70005745	1	Switch, Oil	
1	70006013	1	Adapter	
2	7023154	1	Plug, Drain	
2	7017904	1	Gasket, Oil Pan Drain	
3	70006014	1	Gasket, Cylinder Head (Not Shown)	
4	70006015	1	Sensor (Knock) (Not Shown - Located on Left Side of Engine)	
5	70006016	1	Flange Assembly (Water Return)	
5	70002316	1	Pipe	
5	70006017	1	Gasket	
6	70005737	1	Sensor Stick Assembly	
7	70006018	1	Sensor	
8	70006019	1	Valve (PCV)	
8	70006020	1	Seal	
9	7017932	3	Element, Breather	
9	70006021	1	Gasket	
10	70002318	1	Oil Filler Cap	
10	70006022	1	O-Ring	
11	70006023	1	Filter, Oil	
12	70006024	1	Dipstick	
13	70006025	1	Pump Assembly, Oil (Not Shown - Located Under Front Cover)	
13	70006026	1	Gasket	
13	70006027	1	Key	
14	70006028	1	Flywheel (Not Shown - Located Behind Coupling Plate)	
14	70006029	1	Ring Gear (Part of Flywheel)	
15	70006030	1	Flange Assembly (Breather)	
15	70002316	1	Pipe	
15	70006031	1	Gasket	
16	70006035	1	Pipe Assembly (Not Shown)	
16	70005727	1	Gasket	
17	70006034	4	Coil	
17	70006033	4	Spark Plug	
18	70006032	1	Gasket (Not Shown)	
19	70005751	4	Injector (Not Shown)	
20	70006036	1	Alternator (Includes Voltage Regulator and Gaskets, Fan and Fan Mounting Hardware)	
21	70006037	1	Bracket	
22	70006038	1	Belt	
23	70006039	1	Starter	
24	70006041	1	Thermostat	
24	70002326	1	Gasket	
25	70005726	1	Sensor	
25	70006042	1	O-Ring	
26	70006040	1	Gasket (Not Shown - Located Between Engine Head and Water Flange)	
27	70006043	1	Water Pump Assembly	
27	70004829	1	Pipe	
27	70006044	1	Gasket	
28	70005746	1	Sensor (TMAP)	
28	70005747	1	O-Ring	

ITEM	PART NUMBER	QTY	DESCRIPTION	REV
29	70006049	1	Mixer Assembly	
29	70006050	1	Seal, Rubber	
29	70006045	1	Throttle Body	
29	70006046	1	Gasket	
29	70006047	1	Adapter	
29	70006048	1	O-Ring	
30	70006051	1	Regulator Assembly	
30	70006052	1	Seal, Rubber	
30	70006053	1	Seal, Rubber	
30	70006054	1	Seal, Rubber	
31	70006055	1	Gasket (Not Shown - Located Between Intake Manifold and Engine Head)	
32	70006056	1	Gasket (Not Shown - Located Between Exhaust Manifold and Engine Head)	
33	70006057	1	Muffler	
33	70006065	1	Gasket	
33	70006066	1	Gasket	
33	70006072	1	Gasket	
34	70006058	1	Oil Cooler Assembly	
34	70006059	1	Seal	
34	7017959	2	Clamp	
35	70006060	1	Engine Harness	
36	70006061	1	Module, Engine Control	
37	70006062	2	Sensor (O2)	
38	70006063	1	Pump, Fuel	
39	70006064	1	Manifold (FPM)	
40	70006067	1	Regulator Assembly	
40	70006068	1	Connector	
40	70006069	3	Clip	
40	70006070	2	Connector	
41	70006071	1	Valve, Lockoff	
41	70006078	1	Valve, Lockoff Kit	
42	7017992	1	Filter, Fuel	
43	70006079	1	Gasket Kit (Upper) (Not Shown)	
44	70006080	1	Gasket Kit (Lower) (Not Shown)	
45	70006074	2	Joint (Includes O-Ring)	
46	70006075	1	Joint (Includes O-Ring)	
47	70006076	1	Joint (Includes O-Ring)	
47	70006077	1	Gasket	
48	70006379	1	Pulley	
49	70006639	1	Fan	
50	70006640	1	Collar, Fan	

FIGURE 3-48. PUMP COUPLING KIT (KUBOTA ENGINES)

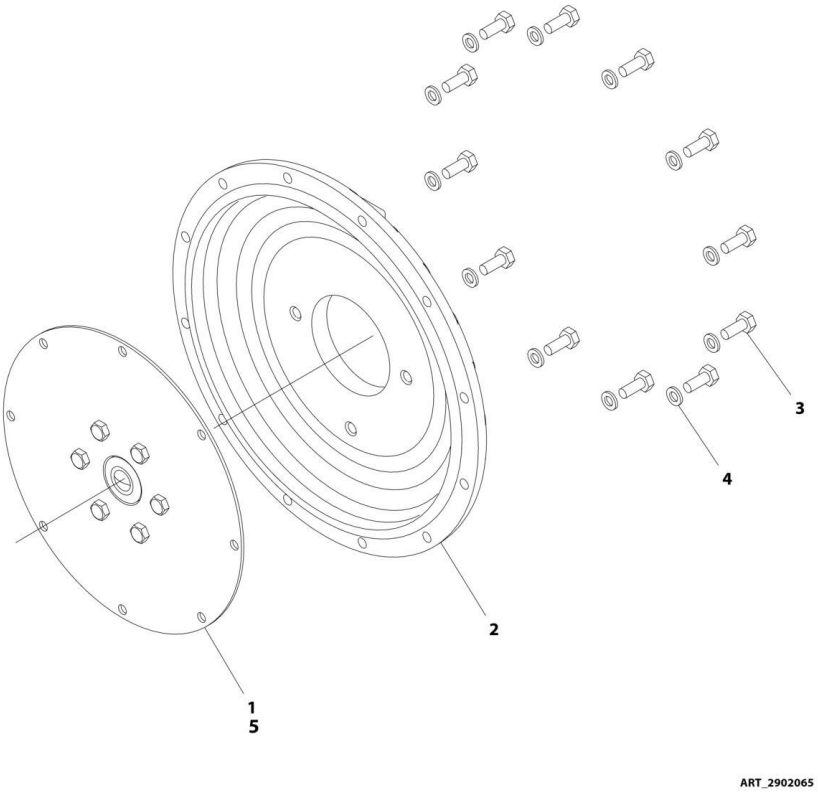

FIGURE 3-48. PUMP COUPLING KIT (KUBOTA ENGINES)

ITEM	PART NUMBER	QTY	DESCRIPTION	REV
	2902065	Ref	PUMP COUPLING KIT	K
1	70000793	1	Coupling, Hayes	
2	See Note	NSS	Plate, Pump Adapter (Note: Use p/n 2902065)	
3	See Note	NSS	Bolt M10 x 20 Grade 10.9 (Note: Use p/n 2902065)	
4	See Note	NSS	Washer, M10 (Note: Use p/n 2902065)	
5	3020021	AR	Grease, Coupling	

FIGURE 3-49. GEAR PUMP ASSEMBLY

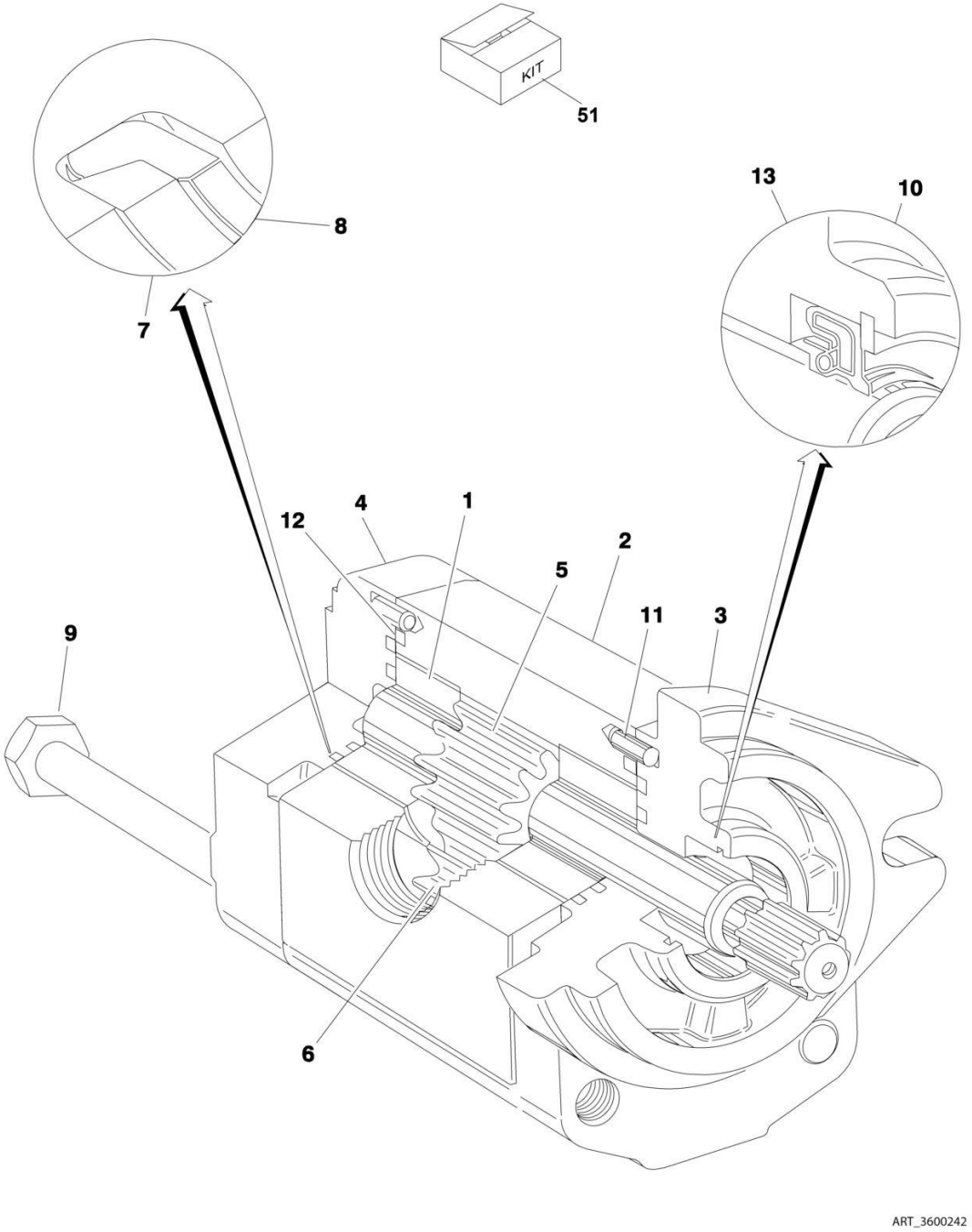

FIGURE 3-49. GEAR PUMP ASSEMBLY

ITEM	PART NUMBER	QTY	DESCRIPTION	REV
	3600242	Ref	GEAR PUMP ASSEMBLY	
1	7010105	2	Bearing/Bushing	
2	See Note	NSS	Housing (Note: Not Available - Purchase Complete Assembly)	
3	See Note	NSS	Flange (Note: Not Available - Purchase Complete Assembly)	
4	7010103	1	Cover	
5	7012987	1	Gear, Drive	
6	7012988	1	Gear, Idler	
7	7007489	2	Ring, Anti-Extrusion	
8	7007489	2	Seal	
9	See Note	4	Bolt (Note: Not Available for Purchase)	
10	7010104	1	Ring, Retaining	
11	See Note	4	Pin, Dowel (Note: Not Available for Purchase)	
12	7007489	2	Seal, O-Ring	
13	7007489	1	Seal, Shaft	
51	7007489	1	Seal Kit (Includes Items 7, 8, 12 & 13)	

FIGURE 3-50. PISTON PUMP ASSEMBLY

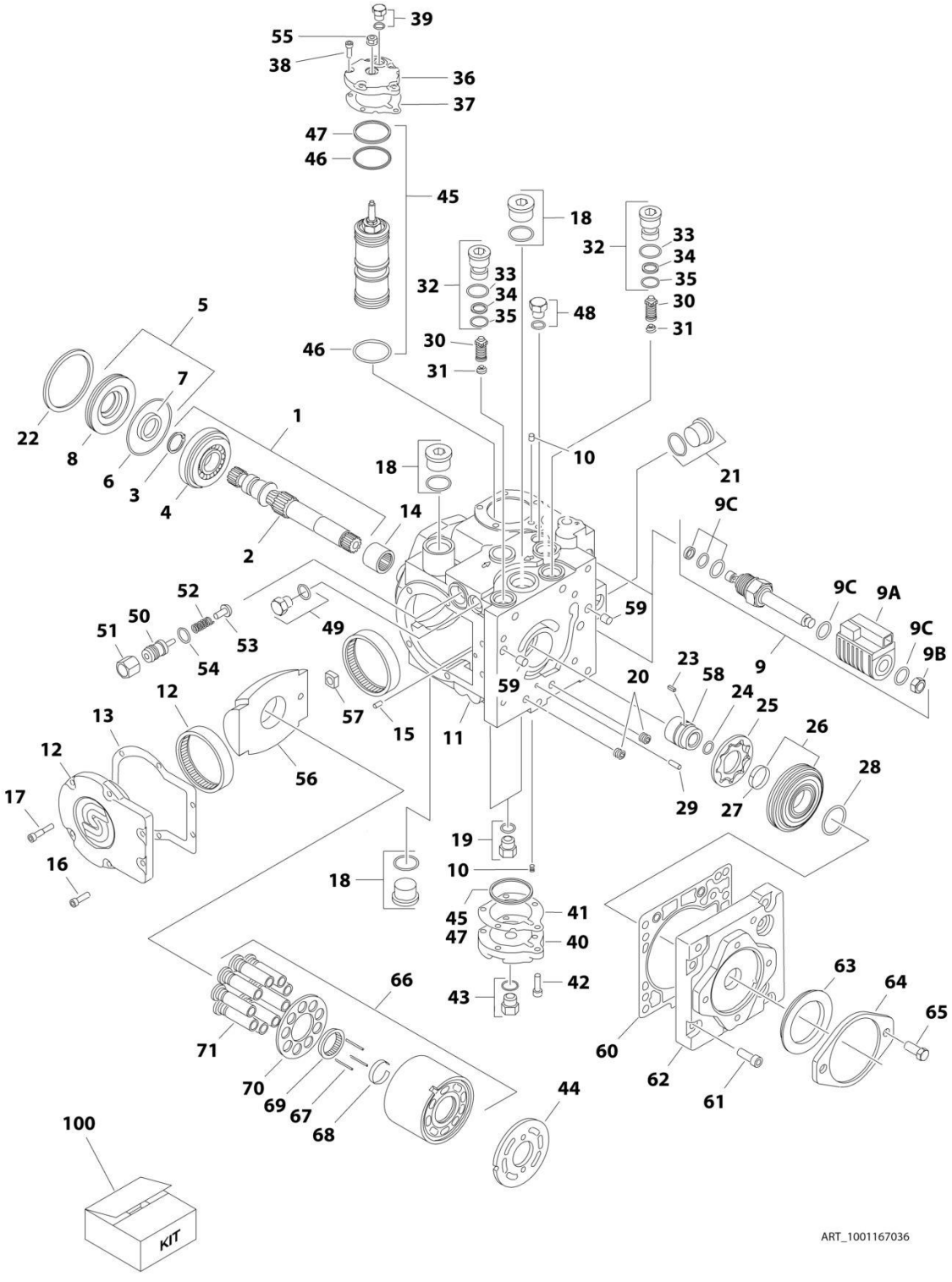

FIGURE 3-50. PISTON PUMP ASSEMBLY

ITEM	PART NUMBER	QTY	DESCRIPTION	REV
	1001167036	Ref	PISTON PUMP ASSEMBLY	B
1	7021240	1	Shaft Assembly (Includes Items 2-4)	
2	7021237	1	Shaft	
3	7021238	1	Ring, Retaining	
4	7021239	1	Bearing, Roller	
5	70004896	1	Shaft Seal Kit (Includes Items 6-8)	
6	7021241	1	O-Ring	
7	7021242	1	Seal, Lip	
8	7021243	1	Carrier, Seal Shaft	
9	7024855	2	Solenoid Assembly	
9A	70004897	2	Coil (1 Per Assembly)	
9B	7024857	2	Nut (1 Per Assembly)	
9C	7024858	2	Seal Kit - 7024855 Cartridge (1 Per Assembly)	
10	70004889	2	Orifice	
11	See Note	NSS	Housing Assembly (Note: Not Available for Purchase)	
12	7021248	1	Side Cover Assembly (Includes Item 13)	
13	70004891	1	Gasket	
14	7021249	1	Bearing, Needle	
15	See Note	NSS	Pin (Note: Not Available for Purchase)	
16	70004890	2	Screw	
17	70004892	4	Screw	
18	7007419	2	Plug Assembly (Includes O-Ring)	
19	7007420	2	Plug Assembly (Includes O-Ring)	
20	See Note	NSS	Plug (Note: Not Available for Purchase)	
21	7007419	1	Plug Assembly (Includes O-Ring)	
22	7021257	1	Ring, Retaining	
23	70004893	1	Key	
24	7022341	1	Ring, Retaining	
25	7021258	1	Gerotor	
26	70004894	1	Gerotor Cover Assembly (Includes Item 27)	
27	7021259	1	Bearing, Journal	
28	7021262	1	O-Ring	
29	See Note	NSS	Pin (Note: Not Available for Purchase)	
30	7021263	2	Bypass Valve Assembly	
31	7024800	2	Spring	
32	7021265	2	Bypass Valve Assembly (Includes Items 32-34)	
33	7007415	2	O-Ring	
34	7021293	2	Ring, Back-up	
35	7022300	2	O-Ring	
36	70004895	1	Cover, Servo	
37	7021253	1	Gasket	
38	70004892	5	Screw	
39	7007420	1	Plug Assembly (Includes O-Ring)	
40	7021268	1	Cover, Servo	
41	7021253	1	Gasket	
42	70004892	5	Screw	
43	7007420	1	Plug Assembly (Includes O-Ring)	
44	7021281	1	Plate, Valve	
45	70004898	1	Servo Piston Kit (Includes Items 46 & 47)	
46	7007495	2	O-Ring	

ITEM	PART NUMBER	QTY	DESCRIPTION	REV
47	7007493	2	O-Ring	
48	7007420	1	Plug Assembly (Includes O-Ring)	
49	70004900	1	Plug Assembly (Includes O-Ring)	
50	7022346	1	Adjuster	
51	7021290	1	Nut	
52	7022347	1	Spring	
53	70004901	1	Poppet	
54	7007415	1	O-Ring	
55	70004902	1	Nut, Seal	
56	70004903	1	Swash Plate	
57	70004904	1	Bearing Assembly	
58	70004905	1	Coupling	
59	7001481	2	Pin	
60	70002257	1	Gasket	
61	70004906	8	Screw	
62	70004907	1	Cover, Charge Pump	
63	70004908	1	Seal	
64	7021299	1	Plate, Cover	
65	7007289	2	Screw	
66	70004909	1	Cylinder Block Assembly (Includes Items 67-71)	
67	70004910	3	Pin, Slipper Hold Down	
68	7021276	1	Retainer, Hold Down Pin	
69	7021277	1	Guide, Slipper Retainer	
70	7021278	1	Retainer, Slipper	
71	70004911	1	Piston Assembly	
100	70004899	1	Seal Kit (Includes Items 5-8, 33-35, 37, 41, 46, 47 & 54)	

FIGURE 3-51. SPARK ARRESTOR INSTALLATION - DEUTZ D2.9L4 ENGINE

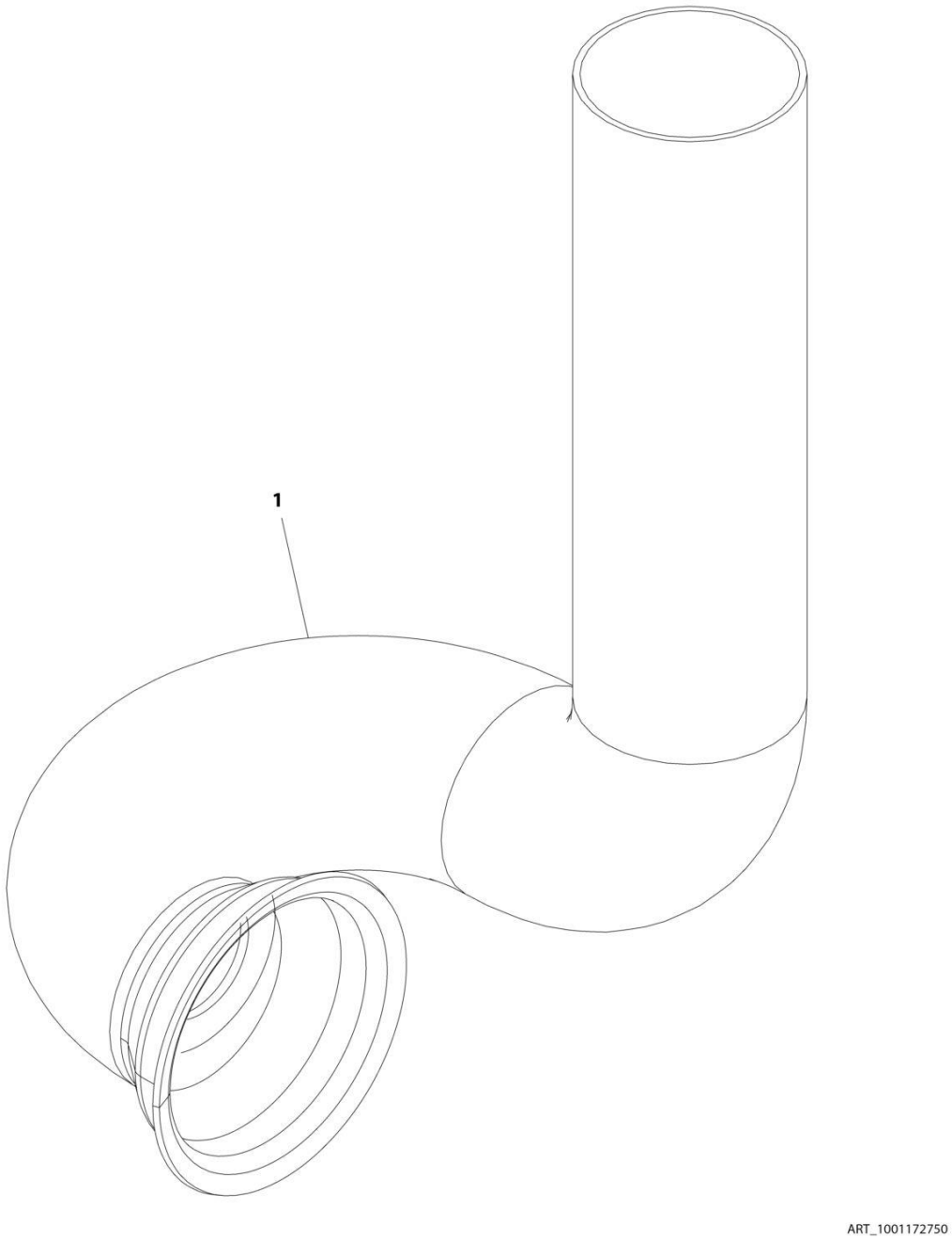

FIGURE 3-51. SPARK ARRESTOR INSTALLATION - DEUTZ D2.9L4 ENGINE

ITEM	PART NUMBER	QTY	DESCRIPTION	REV
	1001172750	Ref	SPARK ARRESTOR INSTALLATION - DEUTZ D2.9L4 ENGINE	A
1	1001172595	1	Muffler, Spark Arrestor	

FIGURE 3-52. CATALYTIC SPARK ARRESTOR INSTALLATION - DEUTZ D2011 ENGINE

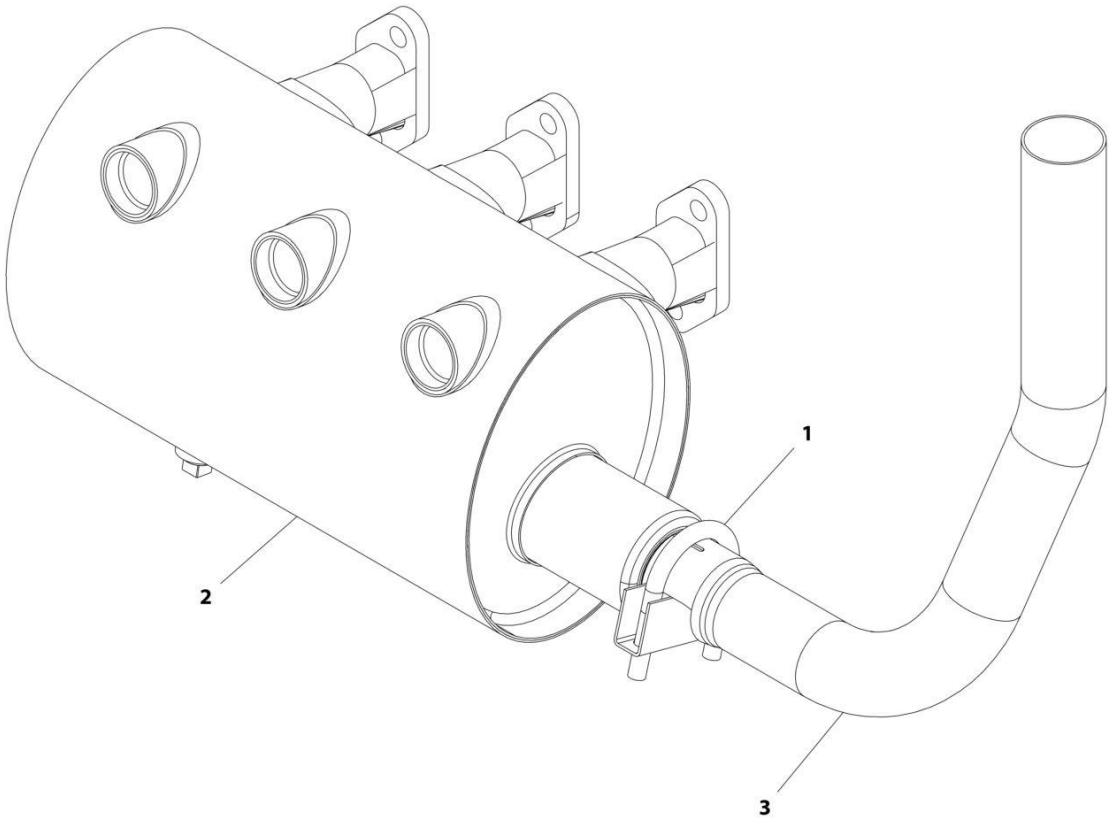

FIGURE 3-52. CATALYTIC SPARK ARRESTOR INSTALLATION - DEUTZ D2011 ENGINE

ITEM	PART NUMBER	QTY	DESCRIPTION	REV
	1001175070	Ref	CATALYTIC SPARK ARRESTOR INSTALLATION - DEUTZ D2011 ENGINE	A
1	1320176	1	Clamp	
2	1001170225	1	Muffler, Catalytic Spark Arresting	
3	1001175068	1	Pipe, Exhaust	

FIGURE 3-53. SPARK ARRESTOR INSTALLATION - DEUTZ D2011 ENGINE

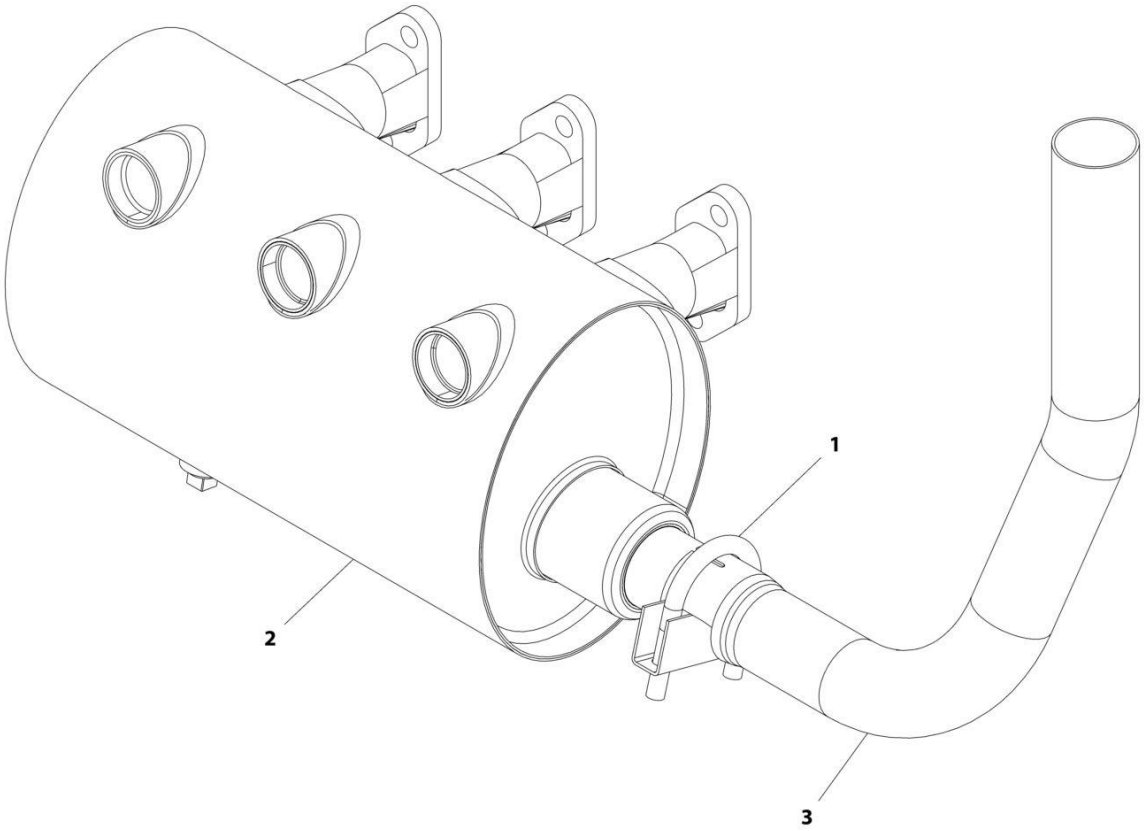

ART_1001175071

FIGURE 3-53. SPARK ARRESTOR INSTALLATION - DEUTZ D2011 ENGINE

ITEM	PART NUMBER	QTY	DESCRIPTION	REV
	1001175071	Ref	SPARK ARRESTOR INSTALLATION - DEUTZ D2011 ENGINE	A
1	1320176	1	Clamp	
2	1001170224	1	Muffler, Spark Arresting	
3	1001175068	1	Pipe, Exhaust	

FIGURE 3-54. SPARK ARRESTOR INSTALLATION - KUBOTA ENGINE

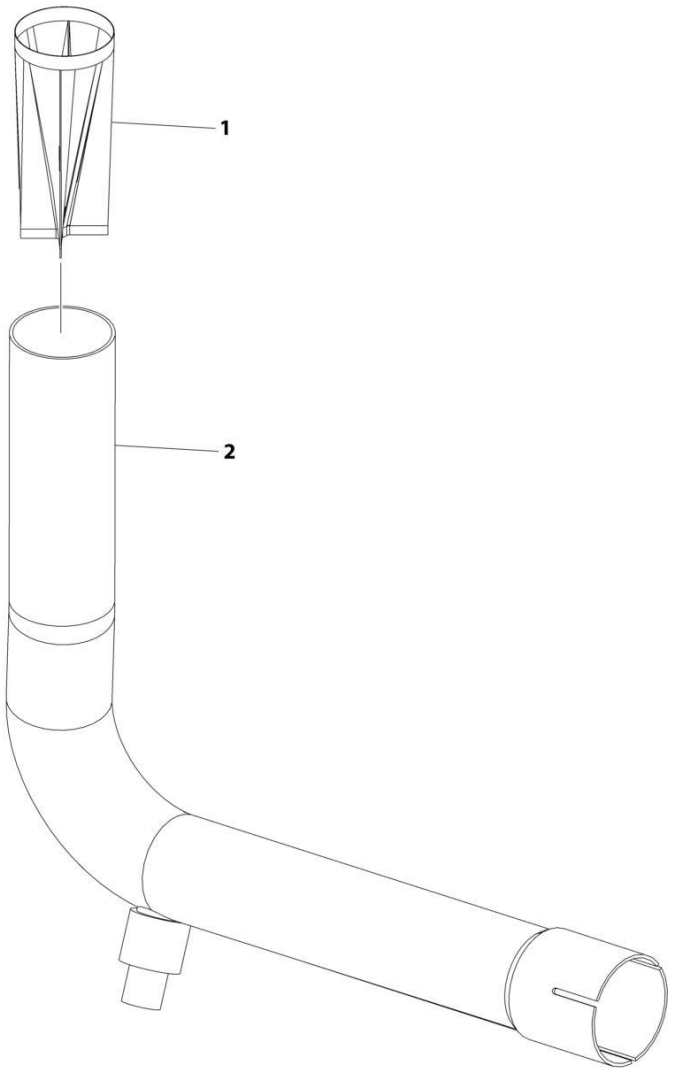

FIGURE 3-54. SPARK ARRESTOR INSTALLATION - KUBOTA ENGINE

ITEM	PART NUMBER	QTY	DESCRIPTION	REV
	1001214837	Ref	SPARK ARRESTOR INSTALLATION - KUBOTA ENGINE	B
1	1001214355	1	Muffler, Spark Arrestor	
2	1001214838	1	Pipe, Exhaust	

FIGURE 3-55. ENGINE BAFFLE INSTALLATION - ABS HOODS (DEUTZ & GM ENGINES)

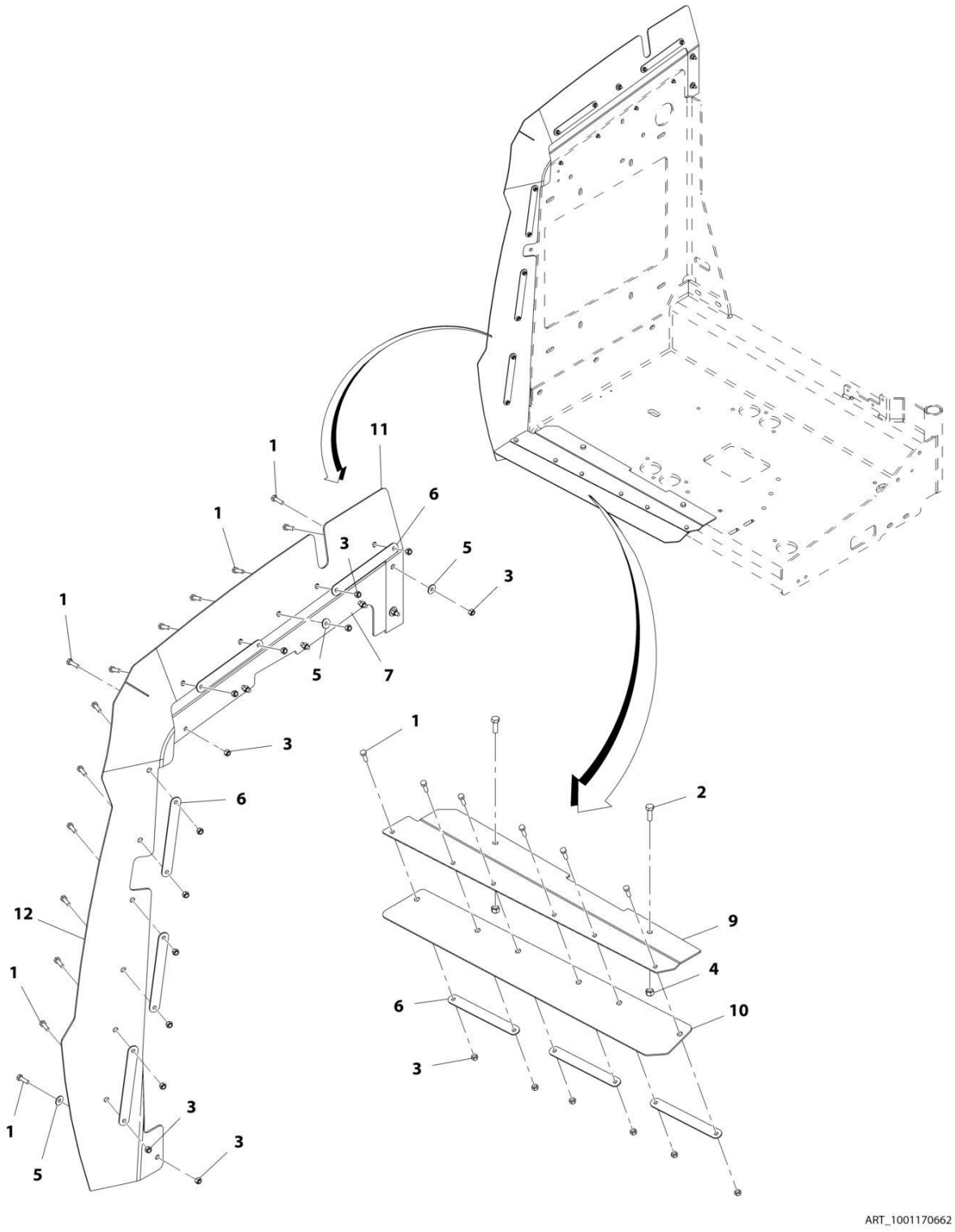

FIGURE 3-55. ENGINE BAFFLE INSTALLATION - ABS HOODS (DEUTZ & GM ENGINES)

ITEM	PART NUMBER	QTY	DESCRIPTION	REV
	1001170662	Ref	ENGINE BAFFLE INSTALLATION	F
1	0760610	24	Bolt M6 x 20	
2	0760812	2	Bolt M8 x 25	
3	3290605	24	Nut, Lock M6 x 1	
4	3290805	2	Nut, Lock M8 x 1.25	
5	4811702	4	Washer, M6	
6	1001167164	8	Plate, Support	
7	1001170650	1	Bracket	
8	1001170651	1	Seal (Not Shown) **(SN 0300203771 through 0300220296, SN E300000100 through E300003485)**	
9	1001170663	1	Bracket	
10	1001170664	1	Seal	
11	1001211877	1	Seal **(SN 0300220297 through 0300272360, SN E300003486 through E300007988, SN 1300007289 through 1300007393, Except SN 0300272174 through 0300272184, Excluding E300007847)**	
12	1001211878	1	Seal **(SN 0300220297 through 0300272360, SN E300003486 through E300007988, SN 1300007289 through 1300007393, Except SN 0300272174 through 0300272184, Excluding E300007847)**	

FIGURE 3-56. ENGINE BAFFLE INSTALLATION - ABS HOODS (KUBOTA ENGINES)

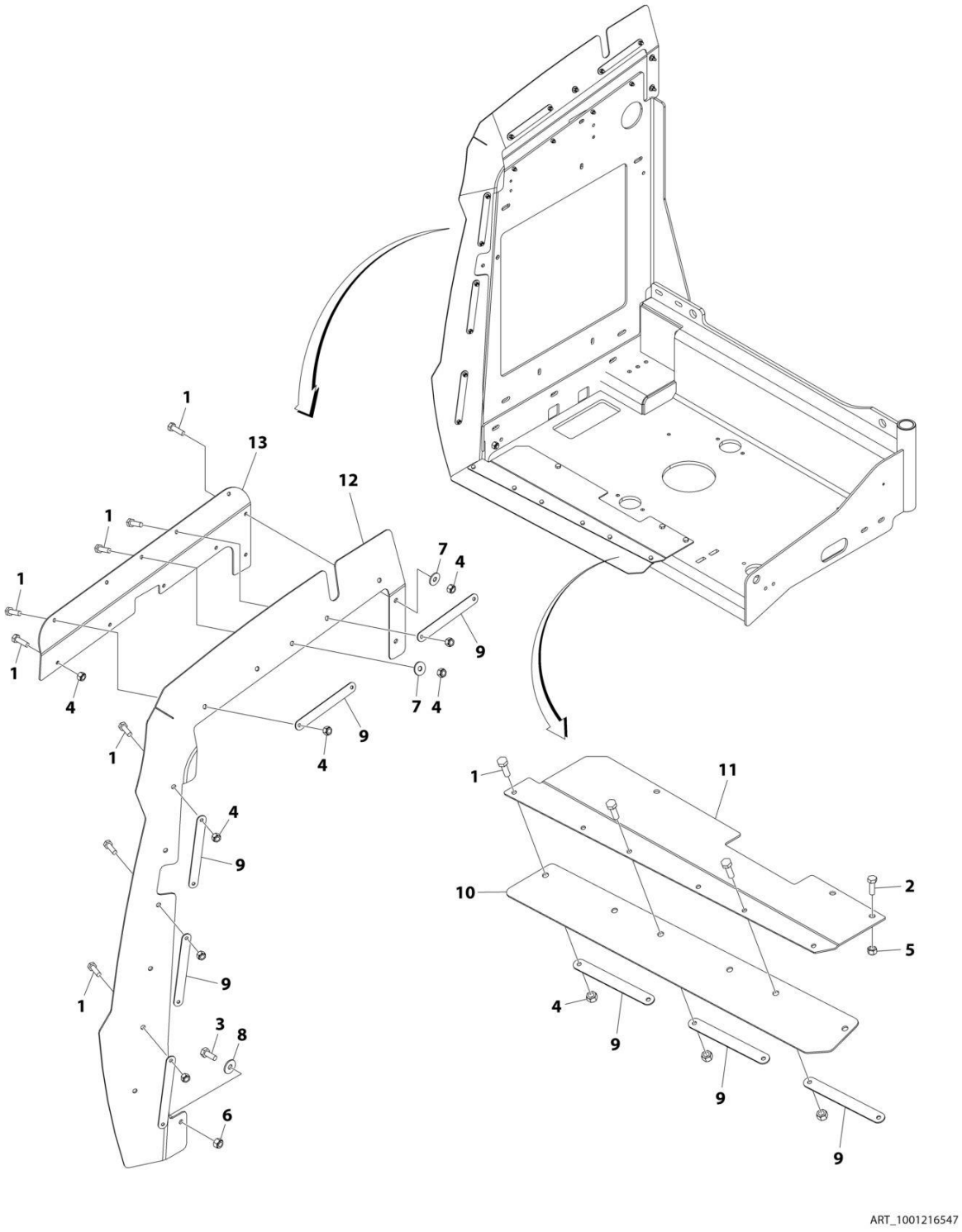

FIGURE 3-56. ENGINE BAFFLE INSTALLATION - ABS HOODS (KUBOTA ENGINES)

ITEM	PART NUMBER	QTY	DESCRIPTION	REV
	1001216547	Ref	KUBOTA ENGINE BAFFLE INSTALLATION	B
1	0760610	24	Bolt M6 x 20	
2	0760812	3	Bolt M8 x 25	
3	0761012	1	Bolt M10 x 25	
4	3290605	23	Nut, Lock M6 x 1	
5	3290805	3	Nut, Lock M8 x 1.25	
6	3291005	1	Nut M10	
7	4811702	3	Washer, M6	
8	4812002	1	Washer M10	
9	1001167164	8	Plate, Support	
10	1001170664	1	Seal	
11	1001216512	1	Bracket	
12	1001216548	1	Seal	
13	1001216549	1	Bracket	

FIGURE 3-57. ENGINE BAFFLE INSTALLATION - STEEL HOODS

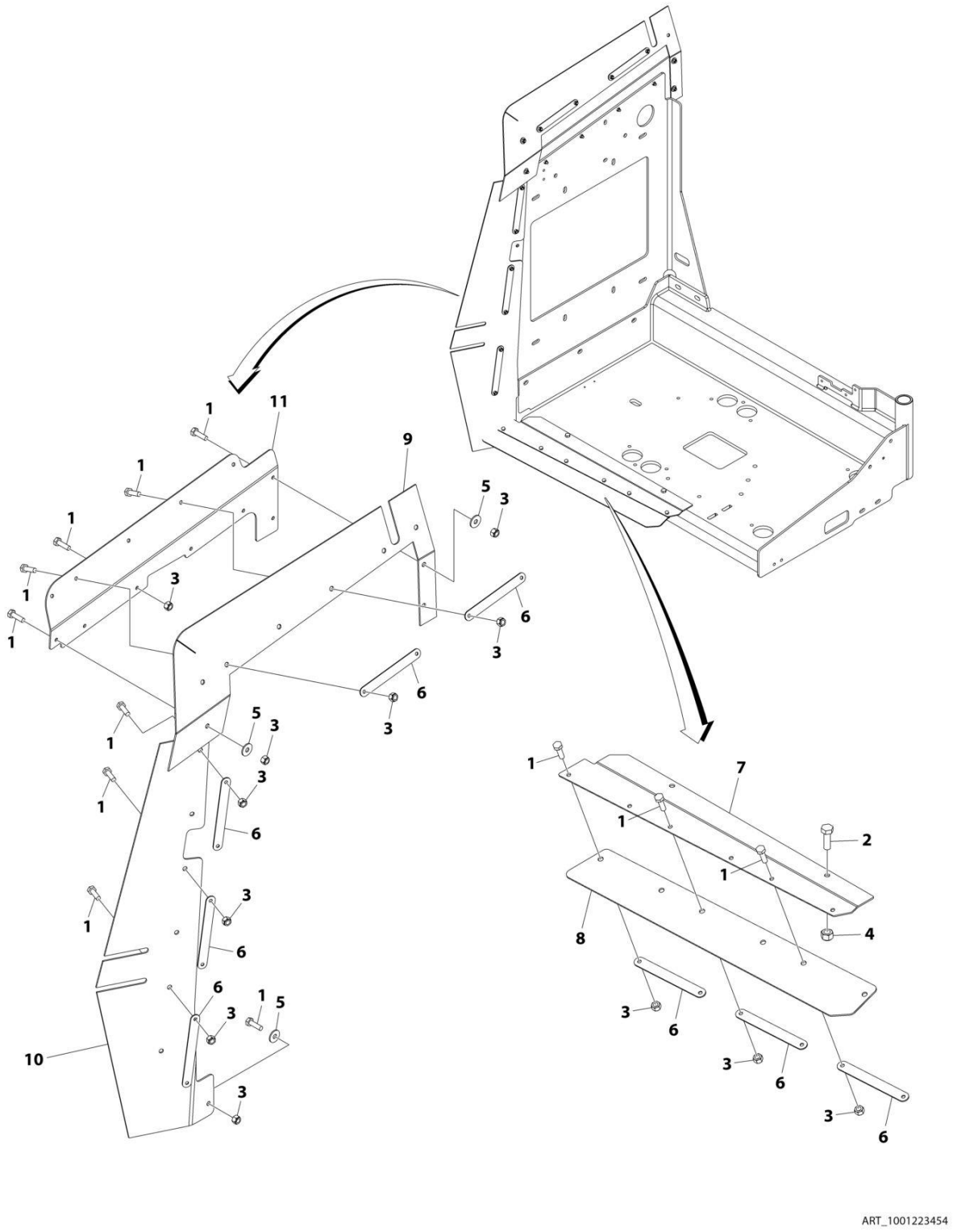

FIGURE 3-57. ENGINE BAFFLE INSTALLATION - STEEL HOODS

ITEM	PART NUMBER	QTY	DESCRIPTION	REV
	1001223454	Ref	STEEL HOOD ENGINE BAFFLE INSTALLATION	A
1	0760610	25	Bolt M6 x 20	
2	0760812	2	Bolt M8 x 25	
3	3290605	25	Nut, Lock M6 x 1	
4	3290805	2	Nut, Lock M8 x 1.25	
5	4811702	5	Washer M6	
6	1001167164	8	Plate, Support	
7	1001170663	1	Bracket	
8	1001170664	1	Seal	
9	1001223309	1	Seal	
10	1001223310	1	Seal	
11	1001223328	1	Bracket	

FIGURE 3-58. ENGINE TRAY JACK (SN 0300203771 through 0300272360, SN E300000100 through E300007214)

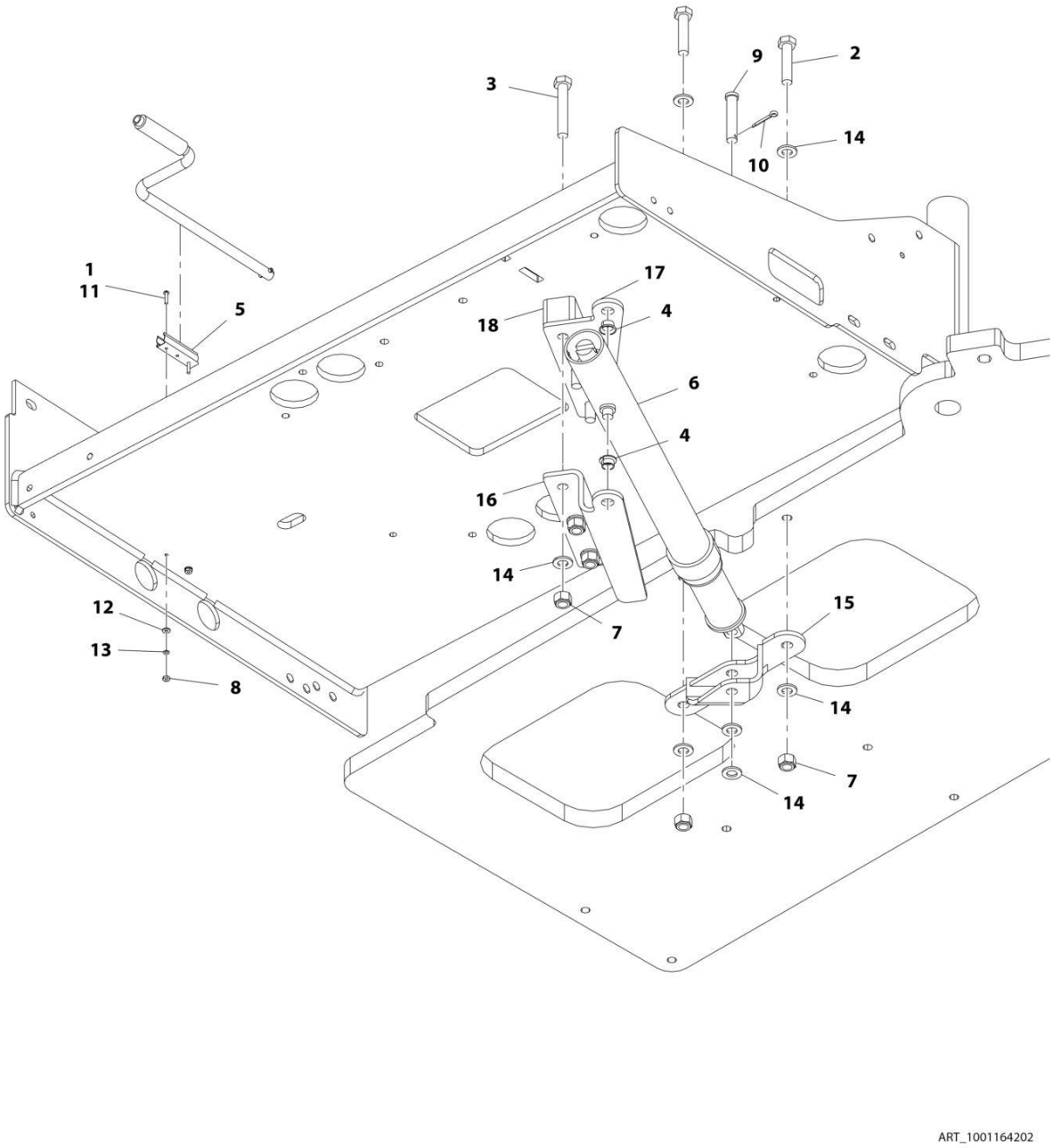

FIGURE 3-58. ENGINE TRAY JACK (SN 0300203771 through 0300272360, SN E300000100 through E300007214)

ITEM	PART NUMBER	QTY	DESCRIPTION	REV
	1001164202	Ref	ENGINE TRAY JACK	C
1	0100011	AR	Compound, Locking	
2	0701219	2	Bolt M12 x 55	
3	0701223	3	Bolt	
4	0962051	2	Bearing	
5	1380147	1	Clip	
6	2840016	1	Screw Jack Assembly	
6	7024598	1	Handle	
6	7016322	1	Wiper	
7	3291205	5	Nut M12	
8	3310601	2	Nut #6	
9	3430820	1	Pin, Clevis	
10	3450404	1	Pin, Cotter	
11	3910610	2	Screw 6 x 5/8	
12	4750600	2	Washer #6	
13	4770600	2	Washer #6	
14	4812100	9	Washer M12	
15	1001166894	1	Support, Engine Tray Jack	
16	1001175073	1	Support, Engine Tray Jack	
17	1001175074	1	Support, Engine Tray Jack	
18	1001175075	1	Shim	

FIGURE 3-59. ENGINE TRAY JACK (SN E300007215 through E300007988)

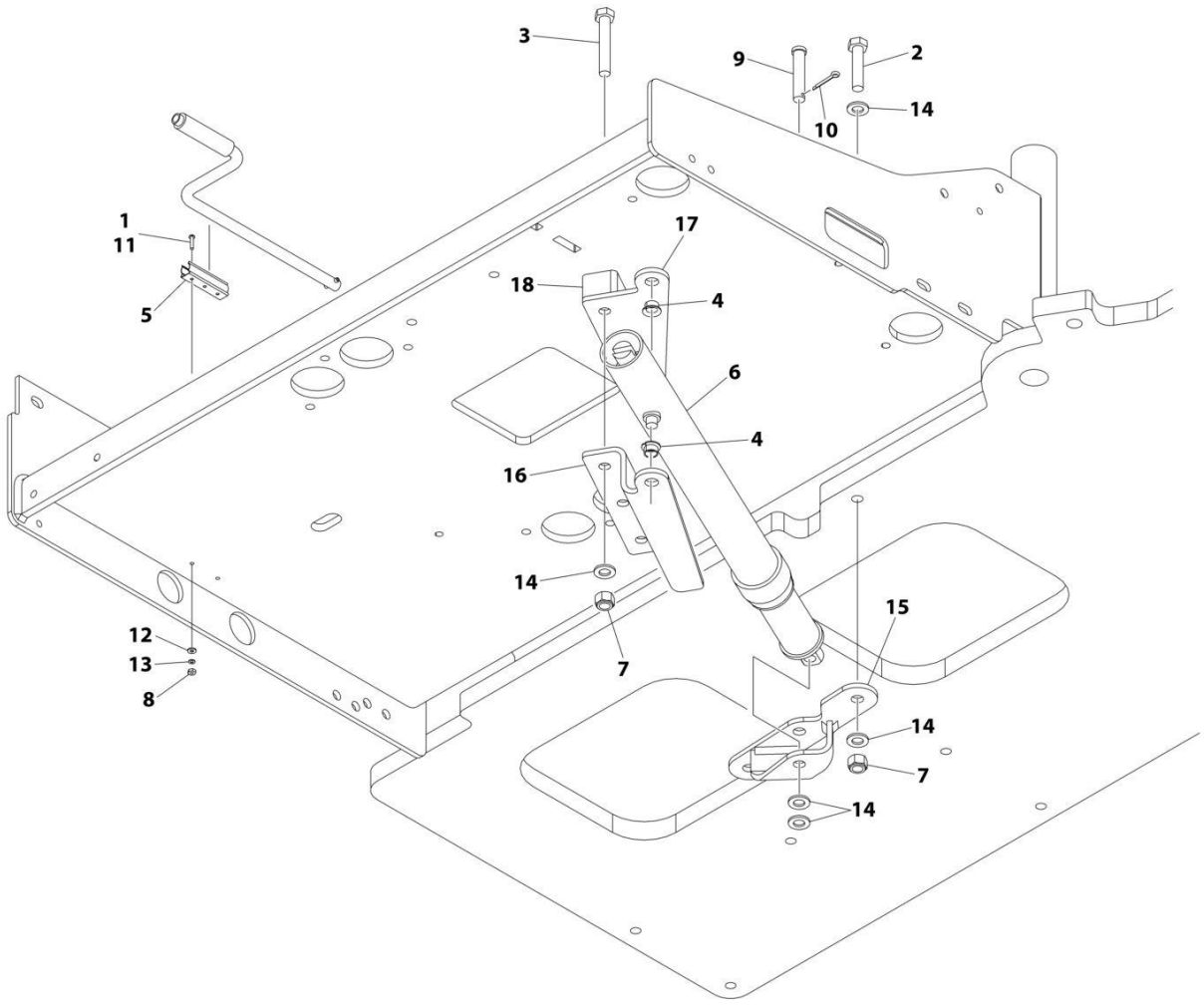

FIGURE 3-59. ENGINE TRAY JACK (SN E300007215 through E300007988)

ITEM	PART NUMBER	QTY	DESCRIPTION	REV
	1001243870	Ref	ENGINE TRAY JACK	B
1	0100011	AR	Compound, Locking	
2	0701219	2	Bolt M12 x 55	
3	0701223	3	Bolt	
4	0962051	2	Bearing	
5	1380147	1	Clip	
6	2840016	1	Screw Jack Assembly	
6	7024598	1	Handle	
6	7016322	1	Wiper	
7	3291205	5	Nut M12 x 1.75	
8	3310601	2	Nut #6	
9	3430820	1	Pin, Clevis	
10	3450404	1	Pin, Cotter	
11	3910610	2	Screw 6 x 5/8	
12	4750600	2	Washer #6	
13	4770600	2	Washer #6	
14	4812100	9	Washer M12	
15	1001166894	1	Support, Engine Tray Jack	
16	1001175073	1	Support, Engine Tray Jack	
17	1001175074	1	Support, Engine Tray Jack	
18	1001243869	1	Shim	

FIGURE 3-60. GENERATOR INSTALLATION - 2500W/60HZ (DEUTZ D2011 ENGINE)

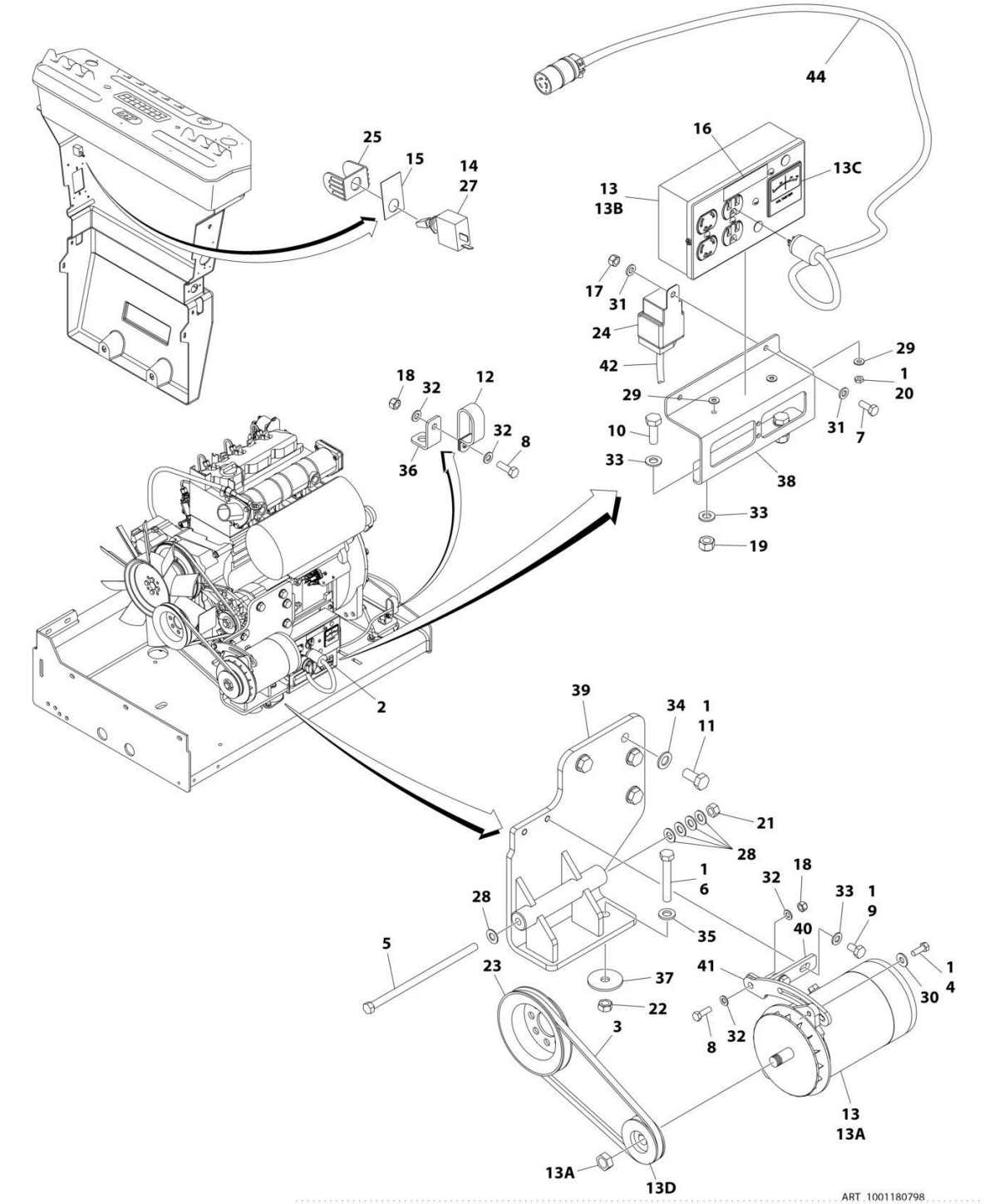

FIGURE 3-60. GENERATOR INSTALLATION - 2500W/60HZ (DEUTZ D2011 ENGINE)

ITEM	PART NUMBER	QTY	DESCRIPTION	REV
	1001180798	Ref	GENERATOR INSTALLATION - 2500W/60HZ (DEUTZ D2011 ENGINE)	B
1	0100011	AR	Compound, Locking	
2	0100048	AR	Grease, Dielectric	
3	0480122	1	Belt	
4	0641507	1	Bolt 5/16 x 7/8	
5	0641772	1	Bolt 7/16 x 9	
6	0711224	1	Bolt M12 x 80 Grade 10.9	
7	0760608	1	Bolt M6 x 16	
8	0760812	2	Bolt M8 x 25	
9	0761009	2	Bolt M10 x 18	
10	0761014	2	Bolt M10 x 30	
11	0771414	4	Bolt M14 x 30 Grade 10.9	
12	1321716	1	Clamp	
13	2460055	1	Generator and Control Box Assembly	
13A	7012558	1	Generator	
	See Note	Ref	Note: Replacement Generators come standard with p/n 3580134 pulley. This pulley may not be correct for all applications. Refer to pulley options below.	
13A	7026199	1	Armature with Slip Rings	
13A	7012513	3	Cap, Brush Holder	
13A	7020108	4	Brush	
13A	7020109	4	Holder, Brush	
13A	7012514	1	Fan	
13A	7020110	1	Bell, Front	
13A	7020111	1	Bell, Rear	
13A	7020190	1	Bearing	
13B	7019680	1	Box, Control	
13B	4460190	1	Receptacle, Standard	
13B	4460027	1	Receptacle, Twistlock	
13B	4360542	1	Breaker, Circuit	
13B	3520028	1	Plug, Hole	
13B	4460961	1	Connector - 4 Position	
13B	4460705	4	Pin, Male	
13B	4460321	1	Connector - 4 Position (Note: Mate to p/n 4460961 Purchase Separately)	
13B	4460268	3	Socket, Female (Note: Mate to p/n 4460705 Purchase Separately)	
13C	2420203	1	Voltmeter	
13D	3580276	1	Pulley	
13D	7027887	1	Key, Woodruff	
14	2820031	AR	Heat Shrink	
15	See Note	1	Nameplate (Note: Not Available for Purchase)	
16	3251243	1	Nameplate 120V-60Hz	
17	3290605	1	Nut M6	
18	3290805	2	Nut M8	
19	3291005	2	Nut M10	
20	3311001	2	Nut #10	
21	3311705	1	Nut 7/16	
22	3331211	1	Nut M12	
23	3580158	1	Pulley	

ITEM	PART NUMBER	QTY	DESCRIPTION	REV
24	3740080	1	Relay	
25	4060802	1	Guard, Switch	
26	4240099	AR	Tie-Strap (Not Shown)	
27	4360336	1	Switch, Toggle	
28	4711700	5	Washer 7/16	
29	4751000	4	Washer #10	
30	4751500	1	Washer 5/16	
31	4811700	2	Washer M6	
32	4811900	4	Washer M8	
33	4812000	6	Washer M10	
34	4812200	4	Washer M14	
35	5241200	1	Washer M12 Hardened	
36	1001148641	1	Bracket	
37	1001168018	1	Washer, Snubbing	
38	1001183477	1	Support	
39	1001184637	1	Mount, Engine	
40	1001184644	1	Support	
41	1001184645	1	Bracket	
42	1001187522	1	Harness, Generator (See ELECTRICAL SECTION for Breakdown)	
43	1001188731	1	Wiring Diagram (Not Shown - See ELECTRICAL SECTION for Breakdown)	
44	1001182296	1	Harness, Inverter	
44	1060494	10 ft/3.5m	Cable, Electrical - 12/3	
44	4460134	1	Receptacle, Female	
44	4460138	1	Plug, Male	

FIGURE 3-61. GENERATOR INSTALLATION - 2500W/60HZ (DEUTZ D2.9L4 ENGINE)

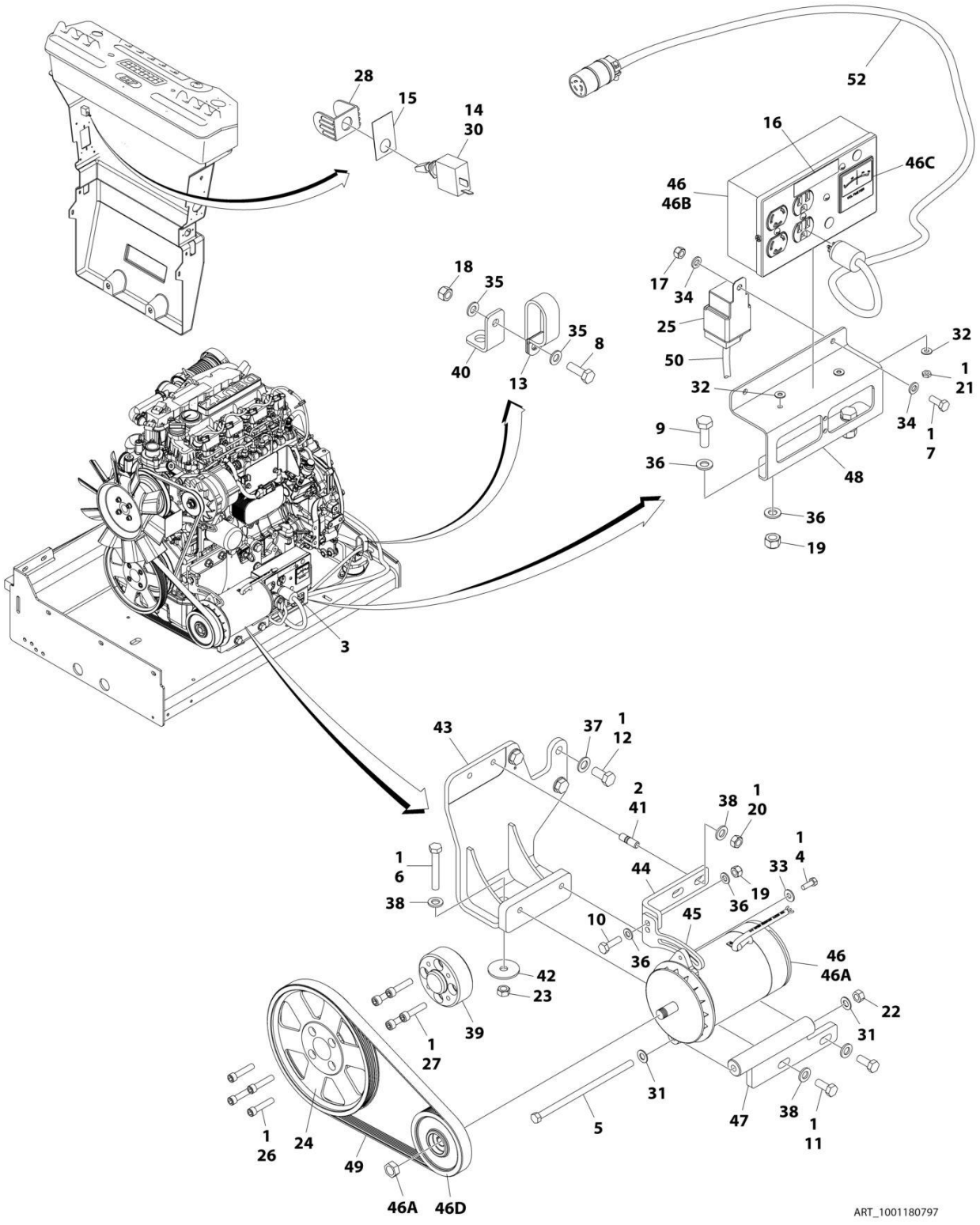

FIGURE 3-61. GENERATOR INSTALLATION - 2500W/60HZ (DEUTZ D2.9L4 ENGINE)

ITEM	PART NUMBER	QTY	DESCRIPTION	REV
	1001180797	Ref	GENERATOR INSTALLATION - 2500W/60HZ (DEUTZ D2.9L4 ENGINE)	D
1	0100011	AR	Compound, Locking	
2	0100019	AR	Compound, Locking	
3	0100048	AR	Grease, Dielectric	
4	0641507	1	Bolt 5/16 x 7/8	
5	0641772	1	Bolt 7/16 x 9	
6	0711224	1	Bolt M12 x 80 Grade 10.9	
7	0760608	1	Bolt M6 x 16	
8	0760812	1	Bolt M8 x 25	
9	0761014	2	Bolt M10 x 30	
10	0761015	1	Bolt M10 x 35	
11	0761214	2	Bolt M12 x 30	
12	0771414	3	Bolt M14 x 30 Grade 10.9	
13	1321716	1	Clamp	
14	2820031	AR	Heat Shrink	
15	See Note	1	Nameplate (Note: Not Available for Purchase)	
16	3251243	1	Nameplate 120V-60Hz	
17	3290605	1	Nut M6	
18	3290805	1	Nut M8	
19	3291005	3	Nut M10	
20	3291201	2	Nut M12	
21	3311001	2	Nut #10	
22	3311705	1	Nut 7/16	
23	3331211	1	Nut M12	
24	3580320	1	Pulley	
25	3740080	1	Relay	
26	3931628	4	Capscrew 3/8 x 1-3/4	
27	4032014	4	Bolt M10 x 50	
28	4060802	1	Guard, Switch	
29	4240099	AR	Tie-Strap (Not Shown)	
30	4360336	1	Switch, Toggle	
31	4711700	2	Washer 7/16	
32	4751000	4	Washer #10	
33	4751500	1	Washer 5/16	
34	4811700	2	Washer M6	
35	4811900	2	Washer M8	
36	4812000	AR	Washer M10	
37	4812200	3	Washer M14	
38	5241200	5	Washer M12 Hardened	
39	1001135679	1	Adapter	
40	1001148641	1	Bracket	
41	1001155041	2	Stud	
42	1001168018	1	Washer, Snubbing	
43	1001168207	1	Support	
44	1001179836	1	Mount, Upper Generator	
45	1001179837	1	Arm Adjustment	
46	1001180001	1	Generator	
46A	7026199	1	Armature with Slip Rings	
46A	7012513	3	Cap, Brush Holder	

ITEM	PART NUMBER	QTY	DESCRIPTION	REV
46A	7020108	4	Brush	
46A	7020109	4	Holder, Brush	
46A	7012514	1	Fan	
46A	7020110	1	Bell, Front	
46A	7020111	1	Bell, Rear	
46A	7020190	1	Bearing	
46B	7019680	1	Box, Control	
46B	4460190	1	Receptacle, Standard	
46B	4460027	1	Receptacle, Twistlock	
46B	4360542	1	Breaker, Circuit	
46B	3520028	1	Plug, Hole	
46B	4460961	1	Connector - 4 Position	
46B	4460705	4	Pin, Male	
46B	4460321	1	Connector - 4 Position (Note: Mate to p/n 4460961 Purchase Separately)	
46B	4460268	3	Socket, Female (Note: Mate to p/n 4460705 Purchase Separately)	
46C	2420203	1	Voltmeter	
46D	1001179893	1	Pulley	
46D	7027887	1	Key, Woodruff	
47	1001181243	1	Mount, Lower Generator	
48	1001183477	1	Support	
49	1001148138	1	Belt	
50	1001187522	1	Harness, Generator (See ELECTRICAL SECTION for Breakdown)	
51	1001188731	1	Wiring Diagram (Not Shown - See ELECTRICAL SECTION for Breakdown)	
52	1001182296	1	Harness, Inverter	
52	1060494	10 ft/3.5m	Cable, Electrical - 12/3	
52	4460134	1	Receptacle, Female	
52	4460138	1	Plug, Male	

FIGURE 3-62. GENERATOR INSTALLATION - 2500W/60HZ (GM ENGINE)

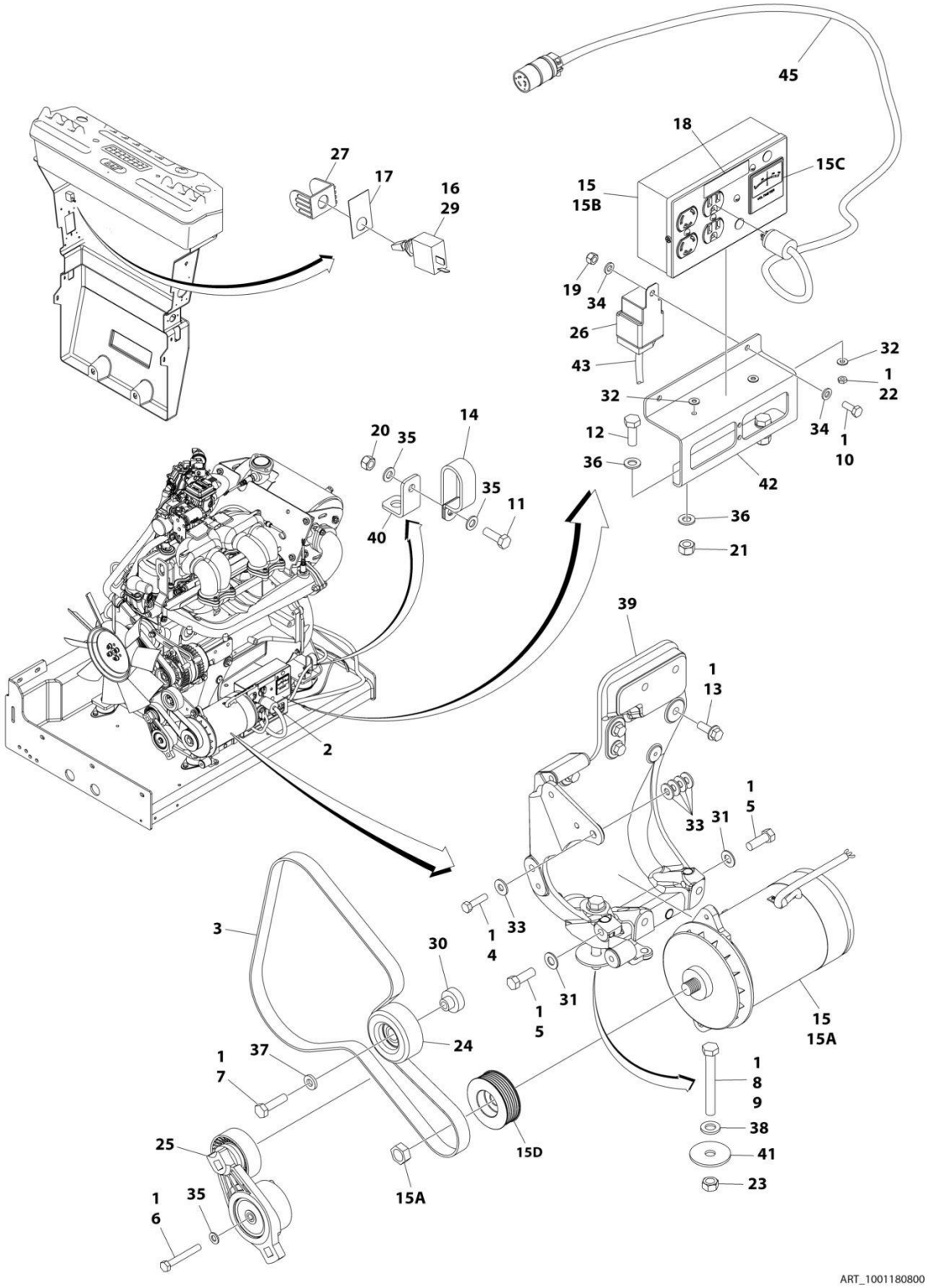

FIGURE 3-62. GENERATOR INSTALLATION - 2500W/60HZ (GM ENGINE)

ITEM	PART NUMBER	QTY	DESCRIPTION	REV
	1001180800	Ref	GENERATOR INSTALLATION - 2500W/60HZ (GM ENGINE)	B
1	0100011	AR	Compound, Locking	
2	0100048	AR	Grease, Dielectric	
3	0480142	1	Belt	
4	0641510	1	Bolt 5/16 x 1-1/4	
5	0641710	2	Bolt 7/16 x 1-1/4	
6	0700820	1	Bolt M8 x 60	
7	0701016	1	Bolt M10 x 40	
8	0711221	1	Bolt M12 x 65 Grade 10.9	
9	0711227	1	Bolt M12 x 100	
10	0760608	1	Bolt M6 x 16	
11	0760812	1	Bolt M8 x 25	
12	0761014	2	Bolt M10 x 30	
13	0811608	4	Screw 3/8 x 1	
14	1321716	1	Clamp	
15	2460051	1	Generator and Control Box Assembly	
15A	7012558	1	Generator - 110V/60Hz	
15A	7026199	1	Armature with Slip Rings	
15A	7012513	4	Cap, Brush Holder	
15A	7020108	4	Brush	
15A	7020109	4	Holder, Brush	
15A	7012514	1	Fan	
15A	7020110	1	Bell, Front	
15A	7020111	1	Bell, Rear	
15A	7020190	2	Bearing	
15B	7019680	1	Box, Control - 110V/60Hz	
15B	4460190	1	Receptacle, Standard (110V Only)	
15B	4460027	1	Receptacle, Twistlock (110V Only)	
15B	4360542	1	Breaker, Circuit	
15B	3520028	1	Plug, Hole	
15B	4460961	1	Connector - 4 Position	
15B	4460705	4	Pin, Male	
15B	4460321	1	Connector - 4 Position (Note: Mate to p/n 4460961 Purchase Separately)	
15B	4460268	3	Socket, Female (Note: Mate to p/n 4460705 Purchase Separately)	
15C	2420203	1	Voltmeter	
15D	3580324	1	Pulley	
15D	7027887	1	Key, Woodruff	
16	2820031	AR	Heat Shrink	
17	See Note	1	Nameplate (Note: Not Available for Purchase)	
18	3251243	1	Nameplate 120V-60Hz	
19	3290605	1	Nut M6	
20	3290805	1	Nut M8	
21	3291005	2	Nut M10	
22	3311001	2	Nut #10	
23	3331211	1	Nut M12	
24	3580312	1	Pulley	
25	3580348	1	Pulley	
26	3740080	1	Relay	
27	4060802	1	Guard, Switch	

ITEM	PART NUMBER	QTY	DESCRIPTION	REV
28	4240099	AR	Tie-Strap (Not Shown)	
29	4360336	1	Switch, Toggle	
30	4568735	1	Spacer	
31	4711700	2	Washer 7/16	
32	4751000	4	Washer #10	
33	4751500	5	Washer 5/16	
34	4811700	2	Washer M6	
35	4811900	3	Washer M8	
36	4812000	4	Washer M10	
37	4891600	1	Washer 3/8	
38	5241200	1	Washer M12 Hardened	
39	1001141181	1	Support	
40	1001148641	1	Bracket	
41	1001168018	1	Washer, Snubbing	
42	1001183477	1	Support	
43	1001187522	1	Harness, Generator (See ELECTRICAL SECTION for Breakdown)	
44	1001188731	1	Wiring Diagram (Not Shown - See ELECTRICAL SECTION for Breakdown)	
45	1001182296	1	Harness, Inverter	
45	1060494	10 ft/3.5m	Cable, Electrical - 12/3	
45	4460134	1	Receptacle, Female	
45	4460138	1	Plug, Male	

FIGURE 3-63. GENERATOR INSTALLATION - 2500W/60HZ (KUBOTA ENGINE)

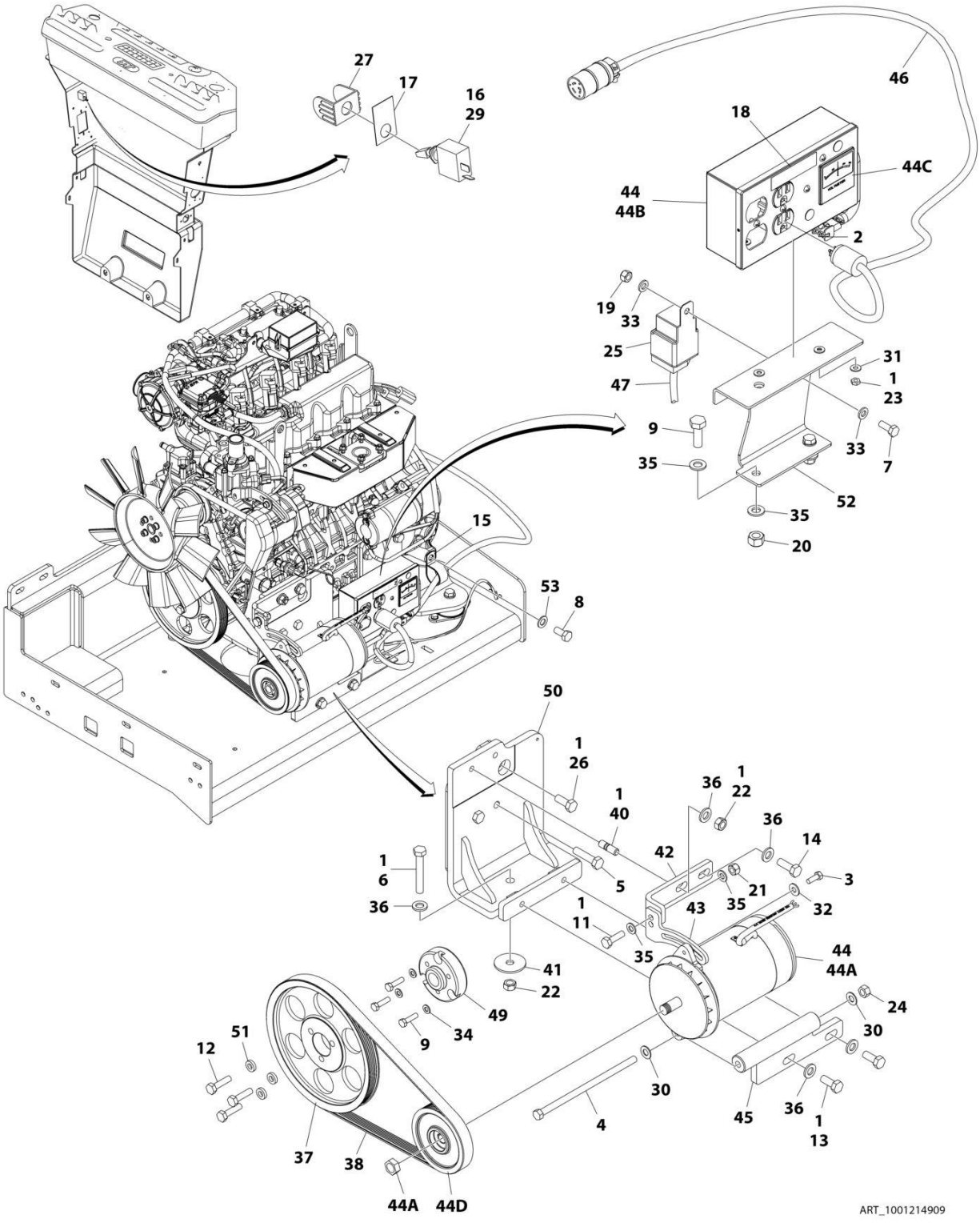

FIGURE 3-63. GENERATOR INSTALLATION - 2500W/60HZ (KUBOTA ENGINE)

ITEM	PART NUMBER	QTY	DESCRIPTION	REV
	1001214909	Ref	GENERATOR INSTALLATION - 2500W/60Hz (KUBOTA ENGINE)	D
1	0100011	AR	Compound, Locking	
2	0100048	AR	Grease, Dielectric	
3	0641507	1	Bolt 5/16 x 7/8	
4	0641772	1	Bolt 7/16 x 9	
5	1001217344	2	Bolt M12 x 50	
6	0711224	AR	Bolt M12 x 80 Grade 10.9	
6	0701224	AR	Bolt M12 x 80	
7	0760608	1	Bolt M6 x 16	
8	1001217345	1	Bolt M14 x 30	
9	0760814	5	Bolt M8 x 30	
11	0761015	1	Bolt M10 x 35	
12	0761016	3	Bolt M10 x 40	
13	0761214	2	Bolt M12 x 30	
14	0761215	1	Bolt M12 x 35	
15	84521061	1	Clamp	
16	2820031	AR	Heat Shrink	
17	See Note	1	Nameplate (Note: Not Available for Purchase)	
18	3251243	1	Nameplate 120V-60Hz	
19	3290605	1	Nut M6	
20	3290805	2	Nut M8	
21	3291005	1	Nut M10	
22	3291201	2	Nut M12	
23	3311001	2	Nut #10	
24	3311705	1	Nut 7/16	
25	3740080	1	Relay	
26	1001217342	1	Bolt M12 x 30	
27	4060802	1	Guard, Switch	
28	4240099	AR	Tie-Strap (Not Shown)	
29	4360336	1	Switch, Toggle	
30	4711700	2	Washer 7/16	
31	4751000	4	Washer #10	
32	4751500	1	Washer 5/16	
33	4811700	2	Washer M6	
34	4811900	5	Washer M8	
35	4812000	4	Washer M10	
36	5241200	1	Washer M12 Hardened	
37	1001147233	1	Pulley	
38	1001148138	1	Belt	
40	1001155041	1	Stud	
41	1001168018	1	Washer, Snubbing	
42	1001179836	1	Mount, Upper Generator	
43	1001179837	1	Arm Adjustment	
44	1001180001	1	Generator	
44A	7026199	1	Armature with Slip Rings	
44A	7012513	3	Cap, Brush Holder	
44A	7020108	4	Brush	
44A	7020109	4	Holder, Brush	
44A	7012514	1	Fan	
44A	7020110	1	Bell, Front	

SECTION 3 - ENGINE

ITEM	PART NUMBER	QTY	DESCRIPTION	REV
44A	7020111	1	Bell, Rear	
44A	7020190	1	Bearing	
44B	7019680	1	Box, Control	
44B	4460190	1	Receptacle, Standard	
44B	4460027	1	Receptacle, Twistlock	
44B	4360542	1	Breaker, Circuit	
44B	3520028	1	Plug, Hole	
44B	4460961	1	Connector - 4 Position	
44B	4460705	4	Pin, Male	
44B	4460321	1	Connector - 4 Position (Note: Mate to p/n 4460961 Purchase Separately)	
44B	4460268	3	Socket, Female (Note: Mate to p/n 4460705 Purchase Separately)	
44C	2420203	1	Voltmeter	
44D	1001179893	1	Pulley	
44D	7027887	1	Key, Woodruff	
45	1001181243	1	Mount, Lower Generator	
46	1001182296	1	Harness, Inverter	
46	1060494	10 ft/ 3.5m	Cable, Electrical - 12/3	
46	4460134	1	Receptacle, Female	
46	4460138	1	Plug, Male	
47	1001187522	1	Harness, Generator (See ELECTRICAL SECTION for Breakdown)	
48	1001188731	1	Wiring Diagram (Not Shown - See ELECTRICAL SECTION for Breakdown)	
49	1001213029	1	Adapter, Pulley	
50	1001214546	1	Support	
51	1001216805	1	Spacer	
52	1001216840	1	Support	
53	4812200	1	Washer M14	

FIGURE 3-64. GENERATOR INSTALLATION - 4000W/50HZ (DEUTZ D2011 ENGINE)

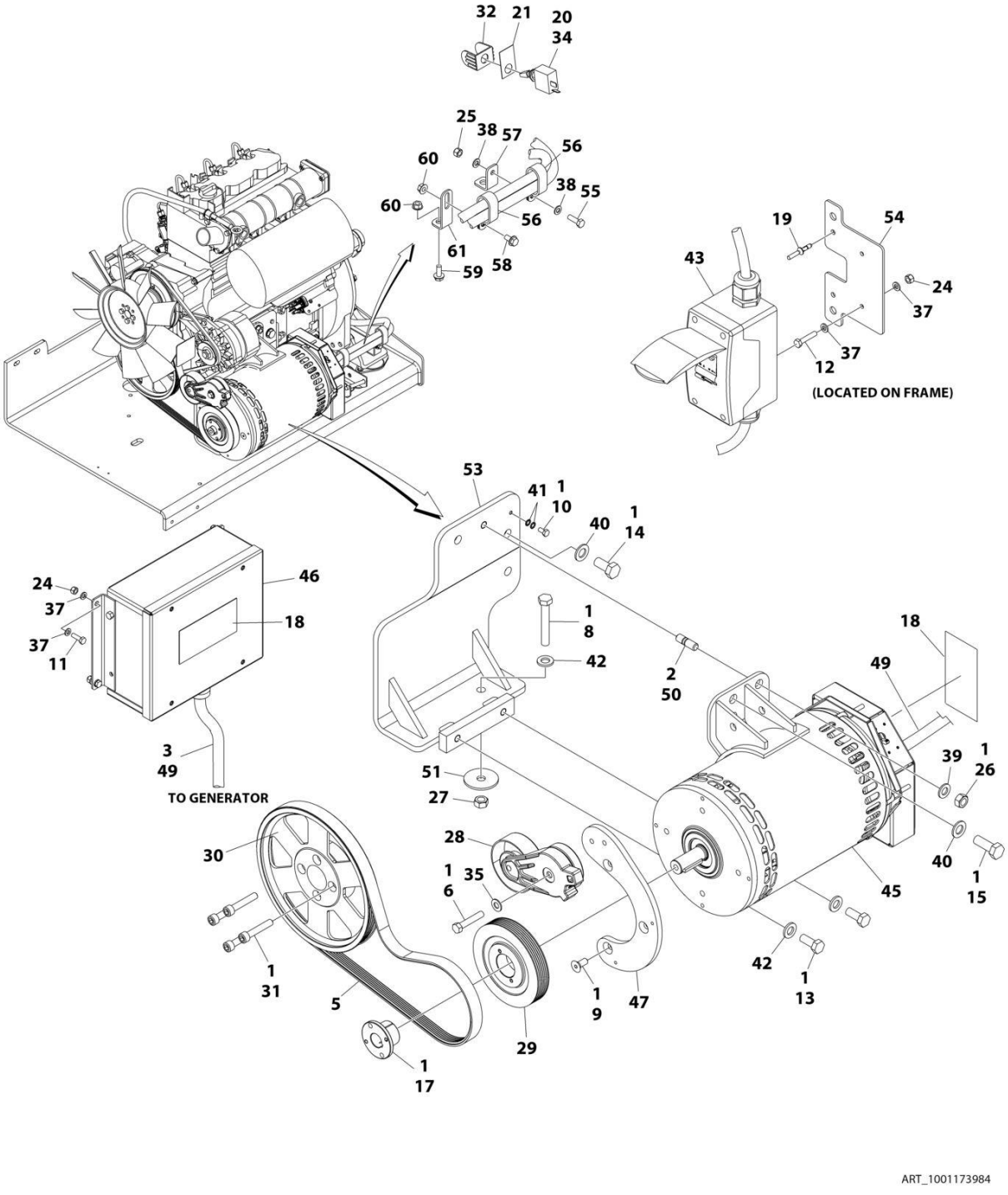

FIGURE 3-64. GENERATOR INSTALLATION - 4000W/50HZ (DEUTZ D2011 ENGINE)

ITEM	PART NUMBER	QTY	DESCRIPTION	REV
	1001173984	Ref	GENERATOR INSTALLATION - 4000W/50HZ (DEUTZ D2011 ENGINE)	G
1	0100011	AR	Compound, Locking	
2	0100019	AR	Compound, Locking	
3	0100048	AR	Grease, Dielectric	
4	0100079	AR	Sealant (Not Shown)	
5	0480126	1	Belt	
6	0641616	1	Bolt 3/8 x 2	
8	0711224	1	Bolt M12 x 80 Grade 10.9	
9	0741607	3	Screw 3/8 x 7/8	
10	0760606	1	Bolt M6 x 12	
11	0760610	4	Bolt M6 x 20	
12	0760614	2	Bolt M6 x 30	
13	0761214	2	Bolt M12 x 30	
14	0771414	2	Bolt M14 x 30 Grade 10.9	
15	0771416	1	Bolt M14 x 40	
17	0962520	1	Bushing	
18	1705489	AR	Decal - Hazardous Voltage	
19	2080040	2	Fastener, Huck	
20	2820031	AR	Heat Shrink	
21	See Note	1	Nameplate (Note: Not Available for Purchase)	
24	3290605	6	Nut M6	
25	3290805	AR	Nut M8	
26	3291201	1	Nut M12	
27	3331211	1	Nut M12	
28	3580317	1	Pulley	
29	3580319	1	Pulley	
30	3580320	1	Pulley	
31	4032015	4	Bolt M10 x 55	
32	4060802	1	Guard, Switch	
33	4240099	AR	Tie-Strap (Not Shown)	
34	4360336	1	Switch, Toggle	
35	4711600	1	Washer 3/8	
37	4811700	12	Washer M6	
38	4811900	AR	Washer M8	
39	4812100	1	Washer M12	
40	4812200	3	Washer M14	
41	4871700	2	Washer M6	
42	5241200	3	Washer M12 Hardened	
43	1001096070	1	Breaker Box Kit (50Hz) (See ELECTRICAL SECTION for Breakdown)	
45	1001138565	1	Generator Assembly	
45	70003709	1	Ring, Retaining (External)	
45	70003708	1	Ring, Retaining (Internal)	
45	70001966	1	Bearing	
45	70004092	1	Endbell (Shaft End)	
45	70004171	1	Key	
45	70004676	1	Rotor	
45	70004677	1	Stator	
45	70004678	1	Endbell (Rear)	

ITEM	PART NUMBER	QTY	DESCRIPTION	REV
45	70004679	1	Cover, Endbell (Rear)	
45	70004680	1	Enclosure, Wiring	
45	70004681	1	Cover, Enclosure	
45	70004682	1	Switch, Reset (Located on Enclosure Cover)	
45	70004683	1	Connector, Strain Relief (Located on Enclosure Cover)	
46	1001138566	1	Box, Control	
47	1001139357	1	Mount, Tensioner	
49	1001152532	1	Harness, Generator (See ELECTRICAL SECTION for Breakdown)	
50	1001196382	1	Stud	
51	1001168018	1	Washer, Snubbing	
53	1001173925	1	Mount	
54	1001174158	1	Mount	
55	0760812	1	Bolt M8 x 25	
56	1321716	AR	Clamp	
57	1001148641	1	Bracket	
58	5250808	AR	Bolt M8 x 16	
59	5250810	AR	Bolt M8 x 20	
60	5260800	AR	Nut M8	
61	1001223122	1	Support **(SN 0300226844 through 0300272360, SN E300004186 through E300007988, SN 1300007289 through 1300007393, Except SN 0300272174 through 0300272184, Excluding E300007847)**	

FIGURE 3-65. GENERATOR INSTALLATION - 4000W/60HZ (DEUTZ D2011 ENGINE)

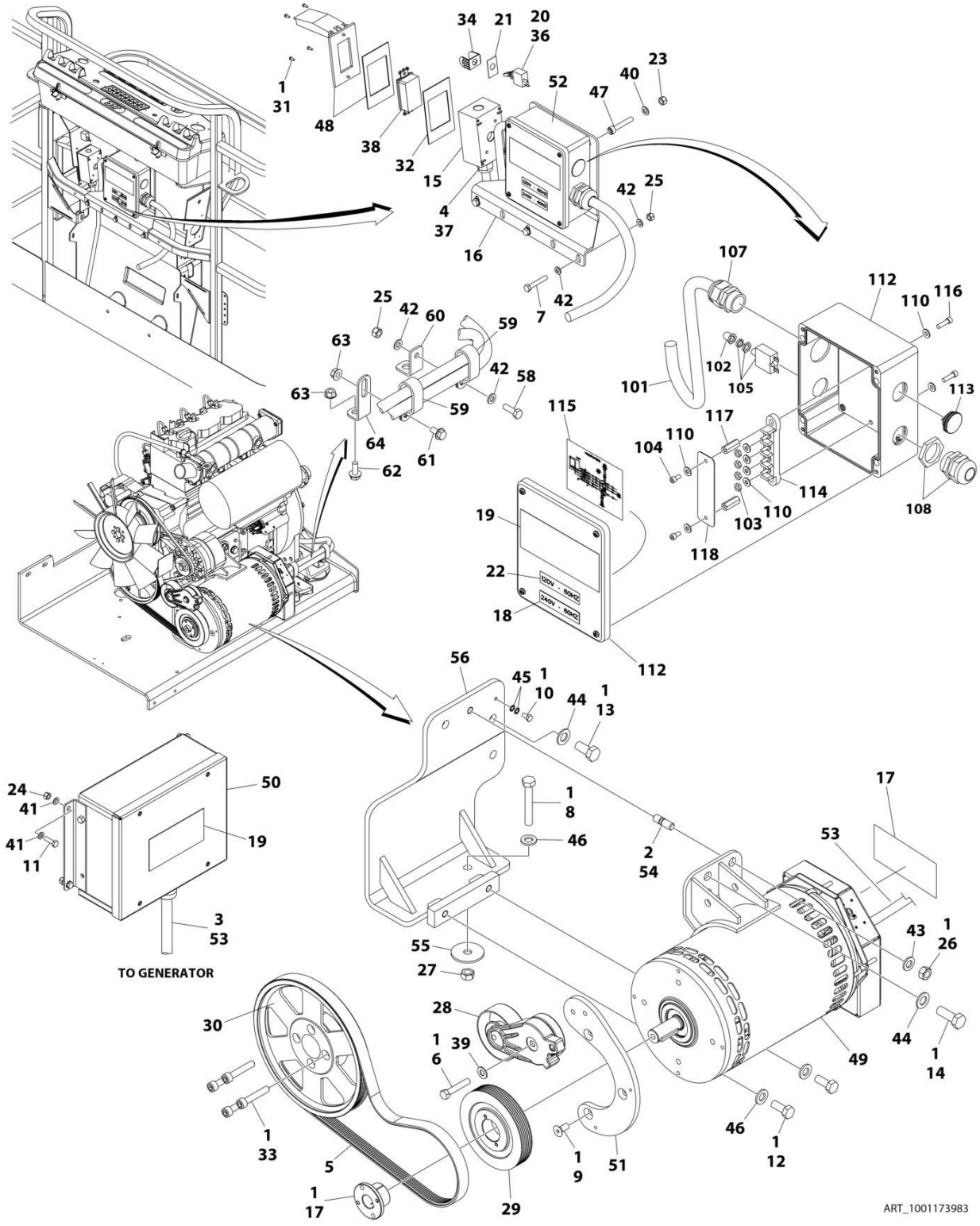

FIGURE 3-65. GENERATOR INSTALLATION - 4000W/60HZ (DEUTZ D2011 ENGINE)

ITEM	PART NUMBER	QTY	DESCRIPTION	REV
	1001173983	Ref	GENERATOR INSTALLATION - 4000W/60HZ (DEUTZ D2011 ENGINE)	E
1	0100011	AR	Compound, Locking	
2	0100019	AR	Compound, Locking	
3	0100048	AR	Grease, Dielectric	
4	0100079	AR	Sealant	
5	0480128	1	Belt	
6	0641616	1	Bolt 3/8 x 2	
7	0700818	3	Bolt M8 x 50	
8	0711224	1	Bolt M12 x 80 Grade 10.9	
9	0741607	3	Screw 3/8 x 7/8	
10	0760606	1	Bolt M6 x 12	
11	0760610	4	Bolt M6 x 20	
12	0761214	2	Bolt M12 x 30	
13	0771414	2	Bolt M14 x 30 Grade 10.9	
14	0771416	1	Bolt M14 x 40	
15	0860038	1	Box, Switch	
16	0902888	1	Bracket	
17	0962520	1	Bushing	
18	1705374	1	Decal - 240V-60Hz	
19	1705387	3	Decal - Hazardous Voltage	
20	2820031	AR	Heat Shrink	
21	See Note	1	Nameplate (Note: Not Available for Purchase)	
22	3251243	1	Nameplate 120V-60Hz	
23	3290505	4	Nut M5	
24	3290605	4	Nut M6	
25	3290805	4	Nut M8	
26	3291201	2	Nut M12	
27	3331211	1	Nut M12	
28	3580317	1	Pulley	
29	3580318	1	Pulley	
30	3580320	1	Pulley	
31	3910606	4	Screw #6 x 3/8	
32	3960422	1	Gasket	
33	4032015	4	Bolt M10 x 55	
34	4060802	1	Guard, Switch	
35	4240099	AR	Tie-Strap (Not Shown)	
36	4360336	1	Switch, Toggle	
37	4460071	1	Connector, Strain Relief	
38	4460346	1	Receptacle	
39	4711600	1	Washer 3/8	
40	4811600	4	Washer M5	
41	4811700	8	Washer M6	
42	4811900	8	Washer M8	
43	4812100	1	Washer M12	
44	4812200	3	Washer M14	
45	4871700	2	Washer M6	
46	5241200	3	Washer M12 Hardened	
47	1001104029	4	Screw M5 x 30	
48	1001110873	1	Shield, Cover	

ITEM	PART NUMBER	QTY	DESCRIPTION	REV
49	1001129858	1	Generator	
49	70003709	1	Ring, Retaining (External)	
49	70003708	1	Ring, Retaining (Internal)	
49	70001966	1	Bearing	
49	70004092	1	Endbell (Shaft End)	
49	70004171	1	Key	
49	70004676	1	Rotor	
49	70004684	1	Stator	
49	70004678	1	Endbell (Rear)	
49	70004679	1	Cover, Endbell (Rear)	
49	70004680	1	Enclosure, Wiring	
49	70004685	1	Cover, Enclosure	
49	70004682	1	Switch, Reset (Located on Enclosure Cover)	
49	70004098	1	Connector, Strain Relief (Located on Enclosure Cover)	
50	1001138566	1	Box, Control	
51	1001139357	1	Mount, Tensioner	
52	1001152457	1	Generator Junction Box Assembly (See Items 101-118 for Breakdown)	
53	1001152532	1	Harness, Generator (See ELECTRICAL SECTION for Breakdown)	
54	1001196382	1	Stud	
55	1001168018	1	Washer, Snubbing	
56	1001173925	1	Mount	
57	1001175631	1	Wiring Diagram (See ELECTRICAL SECTION for Breakdown) **(SN 0300203771 through 0300208696)**	
58	0760812	1	Bolt M8 x 25	
59	1321716	AR	Clamp	
60	1001148641	1	Bracket	
61	5250808	AR	Bolt M8 x 16	
62	5250810	AR	Bolt M8 x 20	
63	5260800	AR	Nut M8	
64	1001223122	1	Support **(SN 0300226844 through 0300272360, SN E300004186 through E300007988, SN 1300007289 through 1300007393, Except SN 0300272174 through 0300272184, Excluding E300007847)**	
	1001152457	Ref	GENERATOR JUNCTION BOX COMPONENTS	
101	1001179154	2.5 ft/ 0.8m	Cable, Electrical - 12/3	
102	3300396	1	Cover, Breaker	
103	3311001	4	Nut #10	
104	3900300	2	Screw	
105	4360070	1	Breaker, Circuit - 15Amp	
107	4460425	1	Connector, Strain Relief (LH Side)	
108	4460426	1	Connector, Strain Relief (RH Side)	
110	4711000	8	Washer #10	
112	1001152456	1	Box, Junction	
113	1001152525	1	Plug	
114	1001152530	1	Terminal, Block	
115	1001153260	1	Decal - Wiring Diagram	
116	3900267	2	Screw	
117	1001158008	2	Stand-Off	
118	1001158363	1	Cover, Terminal Block	

FIGURE 3-66. GENERATOR INSTALLATION - 4000W/60HZ (DEUTZ D2.9L4 ENGINE)

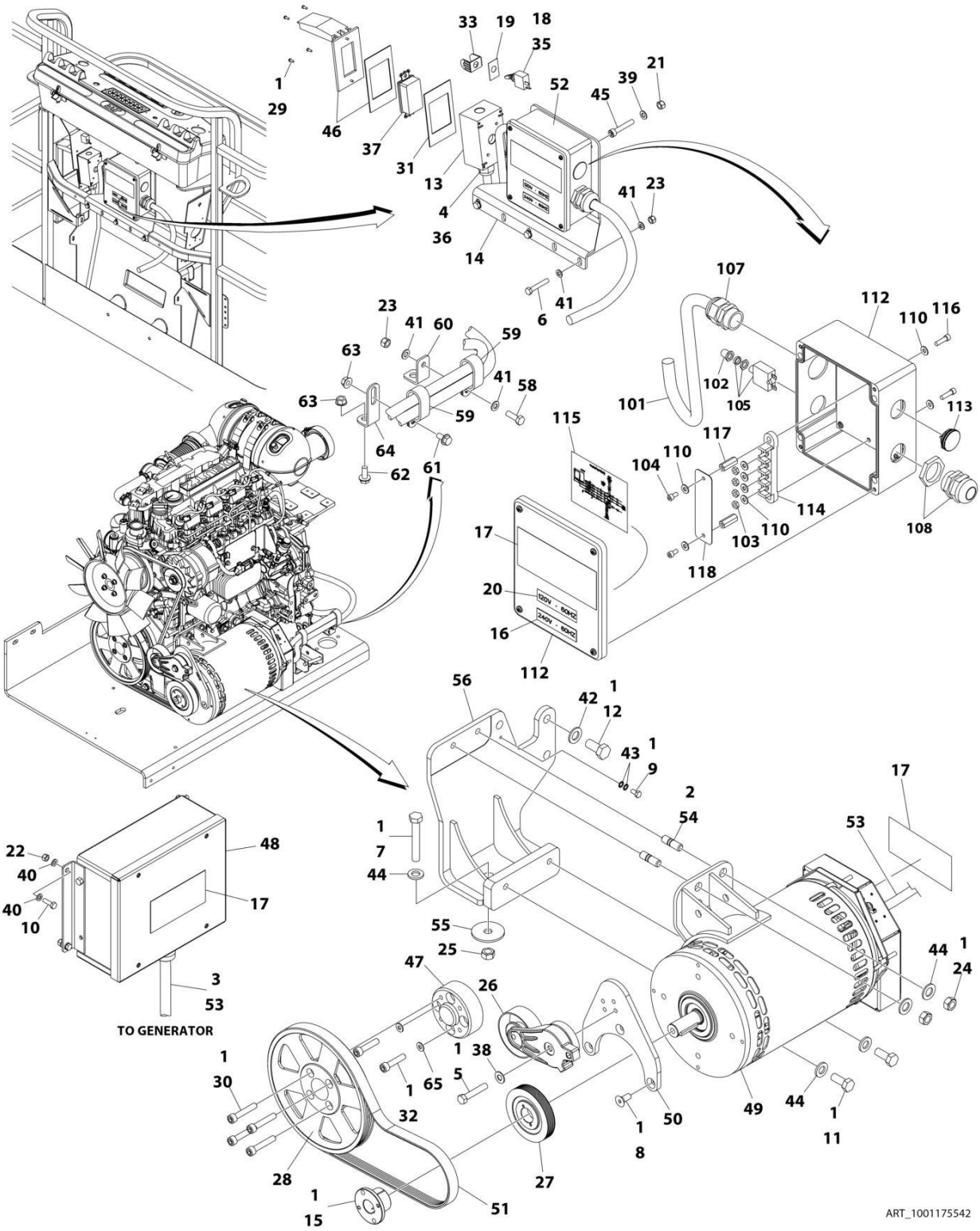

FIGURE 3-66. GENERATOR INSTALLATION - 4000W/60HZ (DEUTZ D2.9L4 ENGINE)

ITEM	PART NUMBER	QTY	DESCRIPTION	REV
	1001175542	Ref	GENERATOR INSTALLATION - 4000W/60HZ (DEUTZ D2.9L4 ENGINE)	H
1	0100011	AR	Compound, Locking	
2	0100019	AR	Compound, Locking	
3	0100048	AR	Grease, Dielectric	
4	0100079	AR	Sealant	
5	0641616	1	Bolt 3/8 x 2	
6	0700818	3	Bolt M8 x 50	
7	0711224	1	Bolt M12 x 80 Grade 10.9	
8	0741607	3	Screw 3/8 x 7/8	
9	0760606	1	Bolt M6 x 12	
10	0760610	4	Bolt M6 x 20	
11	0761212	2	Bolt M12 x 25	
12	0771414	3	Bolt M14 x 30 Grade 10.9	
13	0860038	1	Box, Switch	
14	0902888	1	Bracket	
15	0962520	1	Bushing	
16	1705374	1	Decal - 240V-60Hz	
17	1705387	3	Decal - Hazardous Voltage	
18	2820031	AR	Heat Shrink	
19	See Note	1	Nameplate (Note: Not Available for Purchase)	
20	3251243	1	Nameplate 120V-60Hz	
21	3290505	4	Nut M5	
22	3290605	4	Nut M6	
23	3290805	4	Nut M8	
24	3291201	2	Nut M12	
25	3331211	1	Nut M12	
26	3580317	1	Pulley	
27	3580318	1	Pulley	
28	3580320	1	Pulley	
29	3910606	4	Screw #6 x 3/8	
30	3931628	4	Capscrew 3/8 x 1-3/4	
31	3960422	1	Gasket	
32	4032014	AR	Capscrew M10 x 50	
33	4060802	1	Guard, Switch	
34	4240099	AR	Tie-Strap (Not Shown)	
35	4360336	1	Switch, Toggle	
36	4460071	1	Connector, Strain Relief	
37	4460346	1	Receptacle	
38	4711600	1	Washer 3/8	
39	4811600	4	Washer M5	
40	4811700	8	Washer M6	
41	4811900	8	Washer M8	
42	4812200	3	Washer M14	
43	4871700	2	Washer M6	
44	5241200	5	Washer M12 Hardened	
45	1001104029	4	Screw M5 x 30	
46	1001110873	1	Shield, Cover	
47	1001135679	1	Adapter	
48	1001138566	1	Box, Control	

ITEM	PART NUMBER	QTY	DESCRIPTION	REV
49	1001140346	1	Generator Assembly	
49	70003709	1	Ring, Retaining (External)	
49	70003708	1	Ring, Retaining (Internal)	
49	70001966	1	Bearing	
49	70004092	1	Endbell (Shaft End)	
49	70004099	1	Key	
49	70004676	1	Rotor	
49	70004687	1	Stator	
49	70004678	1	Endbell (Rear)	
49	70004679	1	Cover, Endbell (Rear)	
49	70004680	1	Enclosure, Wiring	
49	70004685	1	Cover, Enclosure	
49	70004682	1	Switch, Reset (Located on Enclosure Cover)	
49	70004098	1	Connector, Strain Relief (Located on Enclosure Cover)	
50	1001142643	1	Support	
51	1001142646	1	Belt	
52	1001152457	1	Generator Junction Box Assembly (See Items 101-118 for Breakdown)	
53	1001152532	1	Harness, Generator (See ELECTRICAL SECTION for Breakdown)	
54	1001196382	2	Stud	
55	1001168018	1	Washer, Snubbing	
56	1001168207	1	Support	
57	1001175631	1	Wiring Diagram (Not Shown - See ELECTRICAL SECTION for Breakdown) **(SN 0300203771 through 0300208696)**	
58	0760812	1	Bolt M8 x 25	
59	1321716	AR	Clamp	
60	1001148641	1	Bracket	
61	5250808	AR	Bolt M8 x 16	
62	5250810	AR	Bolt M8 x 20	
63	5260800	AR	Nut M8	
64	1001223122	1	Support **(SN 0300226844 through 0300272360, SN E300004186 through E300007988, SN 1300007289 through 1300007393, Except SN 0300272174 through 0300272184, Excluding E300007847)**	
65	4812000	AR	Washer M10	
	1001152457	Ref	GENERATOR JUNCTION BOX COMPONENTS	
101	1001179154	2.5 ft/ 0.8m	Cable, Electrical - 12/3	
102	3300396	1	Cover, Breaker	
103	3311001	4	Nut #10	
104	3900300	2	Screw	
105	4360070	1	Breaker, Circuit - 15Amp	
107	4460425	1	Connector, Strain Relief (LH Side)	
108	4460426	1	Connector, Strain Relief (RH Side)	
110	4711000	8	Washer #10	
112	1001152456	1	Box, Junction	
113	1001152525	1	Plug	
114	1001152530	1	Terminal, Block	
115	1001153260	1	Decal - Wiring Diagram	
116	3900267	2	Screw	
117	1001158008	2	Stand-Off	
118	1001158363	1	Cover, Terminal Block	

FIGURE 3-67. GENERATOR INSTALLATION - 4000W/60HZ (GM ENGINE)

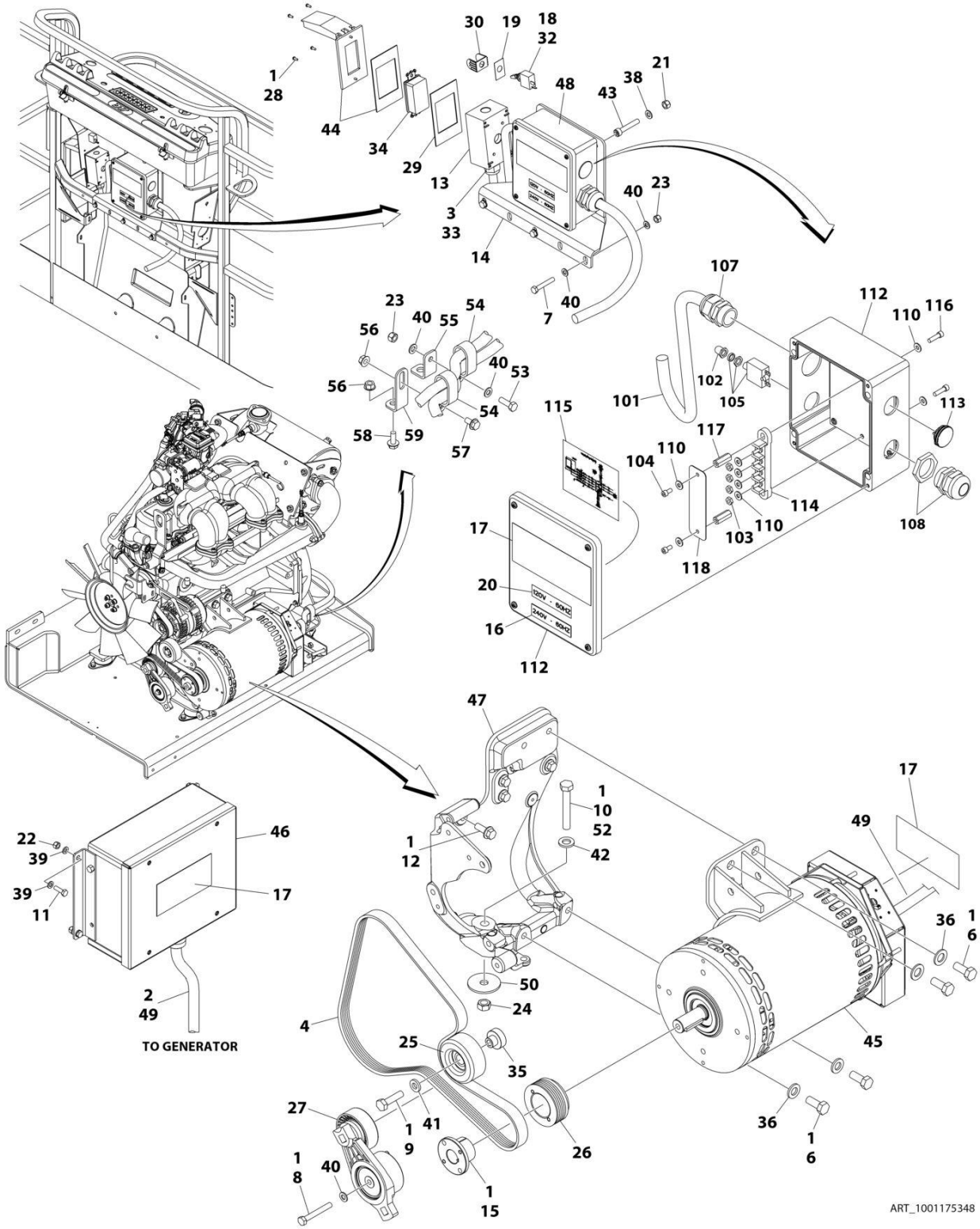

FIGURE 3-67. GENERATOR INSTALLATION - 4000W/60HZ (GM ENGINE)

ITEM	PART NUMBER	QTY	DESCRIPTION	REV
	1001175348	Ref	GENERATOR INSTALLATION - 4000W/60HZ (GM ENGINE)	E
1	0100011	AR	Compound, Locking	
2	0100048	AR	Grease, Dielectric	
3	0100079	AR	Sealant	
4	0480142	1	Belt	
6	0641808	4	Bolt 1/2 x 1	
7	0700818	3	Bolt M8 x 50	
8	0700820	1	Bolt M8 x 60	
9	0701016	1	Bolt M10 x 40	
10	0711227	1	Bolt M12 x 100	
11	0760610	4	Bolt M6 x 20	
12	0811608	4	Screw 3/8 x 1	
13	0860038	1	Box, Switch	
14	0902888	1	Bracket	
15	0962520	1	Bushing	
16	1705374	1	Decal - 240V-60Hz	
17	1705387	3	Decal - Hazardous Voltage	
18	2820031	AR	Heat Shrink	
19	See Note	1	Nameplate (Note: Not Available for Purchase)	
20	3251243	1	Nameplate 120V-60Hz	
21	3290505	4	Nut M5	
22	3290605	4	Nut M6	
23	3290805	4	Nut M8	
24	3331211	1	Nut M12	
25	3580312	1	Pulley	
26	3580314	1	Pulley	
27	3580348	1	Pulley	
28	3910606	4	Screw #6 x 3/8	
29	3960422	1	Gasket	
30	4060802	1	Guard, Switch	
31	4240099	AR	Tie-Strap (Not Shown)	
32	4360336	1	Switch, Toggle	
33	4460071	1	Connector, Strain Relief	
34	4460346	1	Receptacle	
35	4568735	1	Spacer	
36	4711800	4	Washer 1/2	
38	4811600	4	Washer M5	
39	4811700	8	Washer M6	
40	4811900	9	Washer M8	
41	4891600	1	Washer 3/8	
42	5241200	1	Washer M12 Hardened	
43	1001104029	4	Screw M5 x 30	
44	1001110873	1	Shield, Cover	
45	1001129858	1	Generator	
45	70003709	1	Ring, Retaining (External)	
45	70003708	1	Ring, Retaining (Internal)	
45	70001966	1	Bearing	
45	70004092	1	Endbell (Shaft End)	
45	70004171	1	Key	
45	70004676	1	Rotor	

ITEM	PART NUMBER	QTY	DESCRIPTION	REV
45	70004684	1	Stator	
45	70004678	1	Endbell (Rear)	
45	70004679	1	Cover, Endbell (Rear)	
45	70004680	1	Enclosure, Wiring	
45	70004685	1	Cover, Enclosure	
45	70004682	1	Switch, Reset (Located on Enclosure Cover)	
45	70004098	1	Connector, Strain Relief (Located on Enclosure Cover)	
46	1001138566	1	Box, Control	
47	1001141181	1	Support	
48	1001152457	1	Generator Junction Box Assembly (See Items 101-118 for Breakdown)	
49	1001152532	1	Harness, Generator (See ELECTRICAL SECTION for Breakdown)	
50	1001168018	1	Washer, Snubbing	
51	1001175631	1	Wiring Diagram (Not Shown - See ELECTRICAL SECTION for Breakdown) **(SN 0300203771 through 0300208696)**	
52	0711221	1	Bolt M12 x 65 Grade 10.9	
53	0760812	1	Bolt M8 x 25	
54	1321716	AR	Clamp	
55	1001148641	1	Bracket	
56	5260800	AR	Nut M8	
57	5250808	AR	Bolt M8 x 16	
58	5250810	AR	Bolt M8 x 20	
59	1001223122	1	Support **(SN 0300226844 through 0300272360, Except SN 0300272174 through 0300272184)**	
	1001152457	Ref	GENERATOR JUNCTION BOX COMPONENTS	
101	1001179154	2.5 ft/ 0.8m	Cable, Electrical - 12/3	
102	3300396	1	Cover, Breaker	
103	3311001	4	Nut #10	
104	3900300	2	Screw	
105	4360070	1	Breaker, Circuit - 15Amp	
107	4460425	1	Connector, Strain Relief (LH Side)	
108	4460426	1	Connector, Strain Relief (RH Side)	
110	4711000	8	Washer #10	
112	1001152456	1	Box, Junction	
113	1001152525	1	Plug	
114	1001152530	1	Terminal, Block	
115	1001153260	1	Decal - Wiring Diagram	
116	3900267	2	Screw	
117	1001158008	2	Stand-Off	
118	1001158363	1	Cover, Terminal Block	

FIGURE 3-68. GENERATOR INSTALLATION - 7500W/50HZ (DEUTZ D2011 ENGINE)

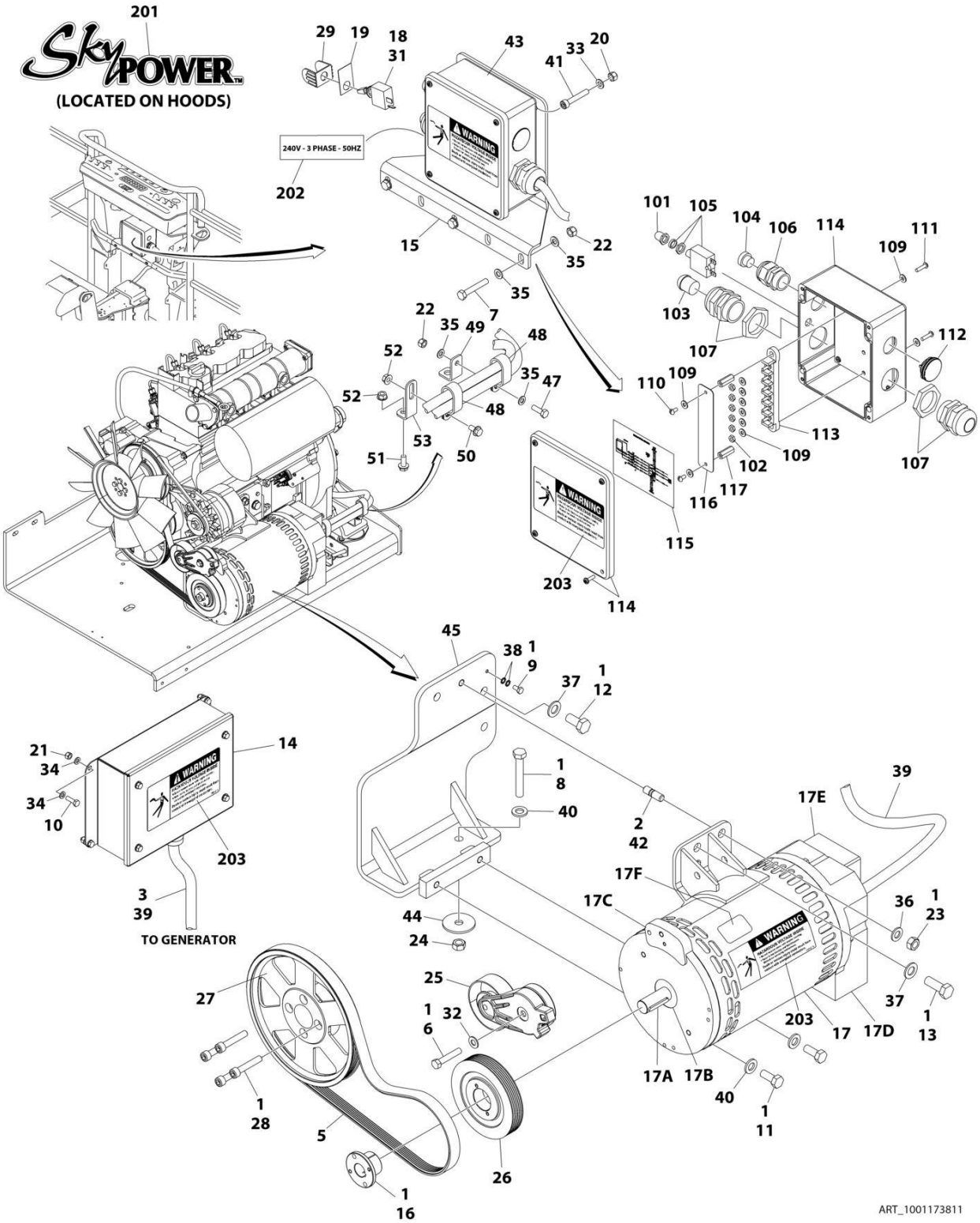

FIGURE 3-68. GENERATOR INSTALLATION - 7500W/50HZ (DEUTZ D2011 ENGINE)

ITEM	PART NUMBER	QTY	DESCRIPTION	REV
	1001173811	Ref	GENERATOR INSTALLATION - 7500W/50HZ (DEUTZ D2011 ENGINE)	E
1	0100011	AR	Compound, Locking	
2	0100019	AR	Compound, Locking	
3	0100048	AR	Grease, Dielectric	
4	0100079	AR	Sealant (Not Shown)	
5	0480126	1	Belt	
6	0641616	1	Bolt 3/8 x 2	
7	0700818	3	Bolt M8 x 50	
8	0711224	1	Bolt M12 x 80 Grade 10.9	
9	0760606	1	Bolt M6 x 12	
10	0760610	4	Bolt M6 x 20	
11	0761214	2	Bolt M12 x 30	
12	0771414	2	Bolt M14 x 30 Grade 10.9	
13	0771416	1	Bolt M14 x 40	
14	0861572	1	Control Box Assembly	
14	7024488	1	Card, Circuit - Generator Power	
14	See Note	NSS	Fuse (Note: Not Available - Purchase Locally)	
14	7024489	1	Card, Circuit - Control	
14	70000619	1	Harness, Control Box (Internal)	
15	0902888	1	Bracket	
16	0962520	1	Bushing	
17	2460048	1	Generator Assembly	
17	70001100	1	Rotor (Includes p/n 70001384 & 70000863) (Not Shown)	
17	70001384	1	Bearing, Ball Radial (Not Shown)	
17	70000863	1	Fan (Not Shown)	
17	70002088	1	Stator (Not Shown)	
17	70002297	1	Stud	
17	70003631	1	Brushholder Assembly (Not Shown)	
17A	70004171	1	Key	
17B	70001966	1	Bearing, Ball Radial (Located in Belt Tensioner Endbell)	
17B	70003708	1	Ring, Internal Retaining (Located in Belt Tensioner Endbell)	
17B	70003709	1	Ring, External Retaining (Located in Belt Tensioner Endbell)	
17C	70001953	1	Endbell, Belt Tensioner	
17D	70004169	1	Endbell, Brush Block	
17E	70004169	1	Shroud	
17E	See Note	NSS	Insulator, Endbell (Note: Not Available for Purchase)	
17E	7027799	1	Block, Connector 6 Position (Not Shown)	
17E	70002460	1	Nut, Brass (Attaches p/n 7027799 to Cover) (Not Shown)	
17E	7024485	1	Breaker, Circuit 30Amp (Not Shown)	
17E	70001696	1	Boot, Breaker (Not Shown)	
17E	7026626	1	Connector, 6 Position (Includes Seal) (Not Shown - Plugs into Item 39)	
17E	7026597	1	Connector, with Leads (Not Shown)	
17E	7026188	1	Clamp, Cable Options (Not Shown)	
17E	70004169	1	Plate, End Panel	
17E	70001974	1	Decal - Terminal Connections	
17F	70001973	1	Decal - Warning Moving Parts	
18	2820031	AR	Heat Shrink	
19	3252764	1	Nameplate	

ITEM	PART NUMBER	QTY	DESCRIPTION	REV
20	3290505	4	Nut M5	
21	3290605	4	Nut M6	
22	3290805	4	Nut M8	
23	3291201	1	Nut M12	
24	3331211	1	Nut M12	
25	3580317	1	Pulley	
26	3580319	1	Pulley	
27	3580320	1	Pulley	
28	4032015	4	Bolt M10 x 55	
29	4060802	1	Guard, Switch	
30	4240099	AR	Tie-Strap (Not Shown)	
31	4360336	1	Switch, Toggle	
32	4711600	1	Washer 3/8	
33	4811600	4	Washer M5	
34	4811700	8	Washer M6	
35	4811900	8	Washer M8	
36	4812100	1	Washer M12	
37	4812200	3	Washer M14	
38	4871700	2	Washer M6	
39	4922925	1	Harness, Generator	
39	4460225	1	Plug, Male 6 Position (Plugs into Generator)	
39	See Note	NSS	Socket, Female (Use with 4460225)	
39	See Note	NSS	Seal, Plug (Use with 4460225)	
39	See Note	NSS	Seal, Interface (Use with 4460225)	
40	5241200	3	Washer M12 Hardened	
41	1001104029	4	Screw M5 x 30	
42	1001196382	1	Stud	
43	1001157525	1	Junction Box Assembly (See Items 101-117 for Breakdown)	
44	1001168018	1	Washer, Snubbing	
45	1001173925	1	Mount	
46	1001174675	1	Wiring Diagram (Not Shown)	
47	0760812	1	Bolt M8 x 25	
48	1321716	AR	Clamp	
49	1001148641	1	Bracket	
50	5250808	AR	Bolt M8 x 16	
51	5250810	AR	Bolt M8 x 20	
52	5260800	AR	Nut M8	
53	1001223122	1	Support **(SN 0300226844 through 0300272360, SN E300004186 through E300007988, SN 1300007289 through 1300007393, Except SN 0300272174 through 0300272184, Excluding E300007847)**	
	1001157525	Ref	JUNCTION BOX ASSEMBLY	B
101	3300396	1	Cover, Fuse	
102	3311001	6	Nut #10-24NC	
103	3520189	1	Plug	
104	3520192	1	Plug	
105	4360070	1	Circuit Breaker - 15Amp	
106	4460425	1	Connector, Strain Relief	
107	4460426	2	Connector, Strain Relief	
109	4711000	10	Flatwasher, #10 Thin	
110	10702077	2	Screw #10-32NF x 3/8in	
111	10702082	2	Screw #10-32NF x 3/4in	

ITEM	PART NUMBER	QTY	DESCRIPTION	REV
112	1001152525	1	Plug	
113	1001157520	1	Block, Terminal	
114	1001157521	1	Box, Junction	
115	1001157528	1	Decal - Wiring Schematic	
116	1001158007	1	Cover, PVC	
117	1001158008	2	Stand-Off	
	0272589	Ref	DECAL INSTALLATION	A
201	1705460	2	Decal - SkyPower	
202	1705461	1	Decal - 240V - 3 Phase - 50Hz	
203	1705489	3	Decal - Hazardous Voltage	

FIGURE 3-69. GENERATOR INSTALLATION - 7500W/60HZ (DEUTZ D2011 ENGINE)

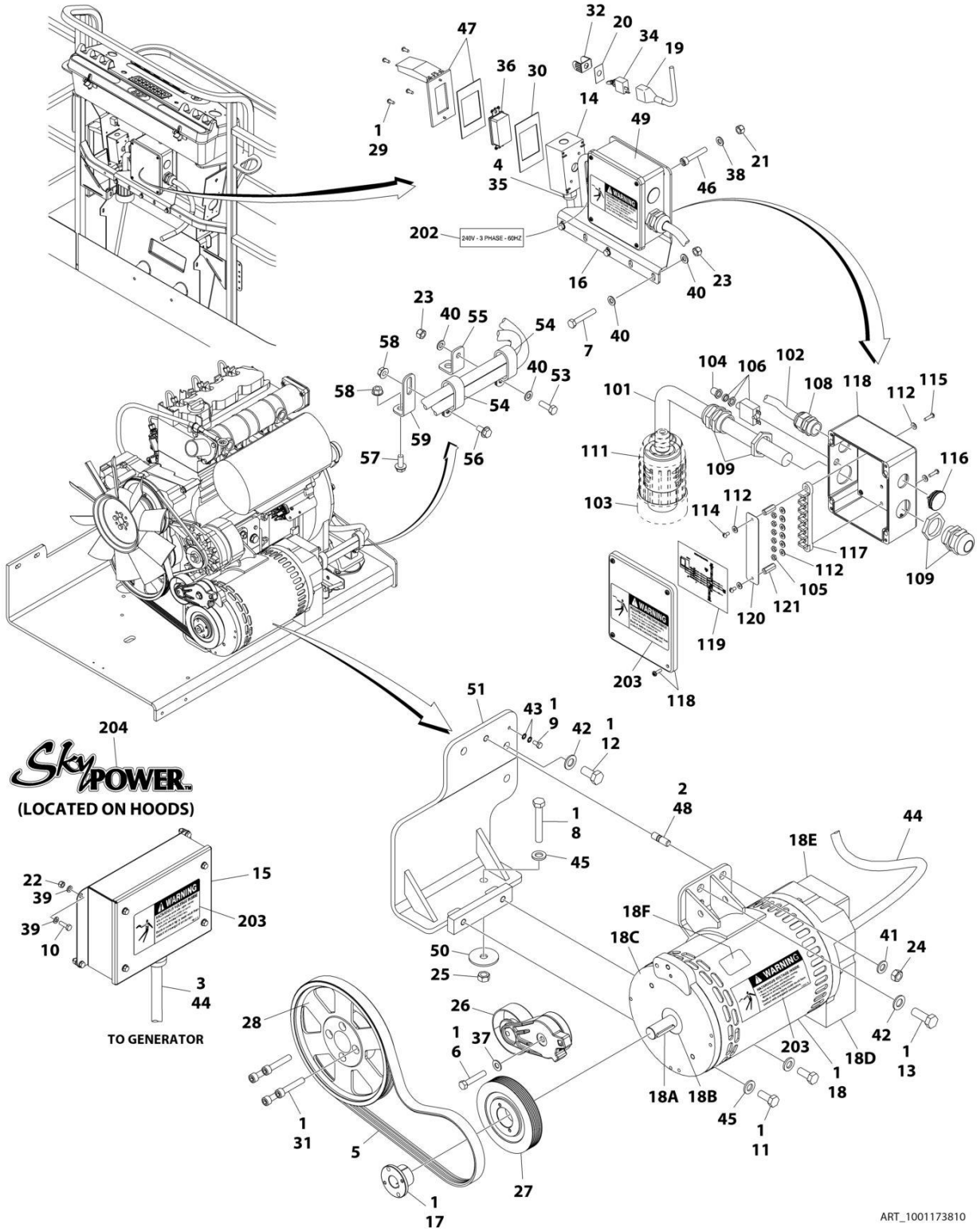

FIGURE 3-69. GENERATOR INSTALLATION - 7500W/60HZ (DEUTZ D2011 ENGINE)

ITEM	PART NUMBER	QTY	DESCRIPTION	REV
	1001173810	Ref	GENERATOR INSTALLATION - 7500W/60Hz (DEUTZ D2011 ENGINE)	E
1	0100011	AR	Compound, Locking	
2	0100019	AR	Compound, Locking	
3	0100048	AR	Grease, Dielectric	
4	0100079	AR	Sealant	
5	0480128	1	Belt	
6	0641616	1	Bolt 3/8 x 2	
7	0700818	3	Bolt M8 x 50	
8	0711224	1	Bolt M12 x 80 Grade 10.9	
9	0760606	1	Bolt M6 x 12	
10	0760610	4	Bolt M6 x 20	
11	0761214	2	Bolt M12 x 30	
12	0771414	2	Bolt M14 x 30 Grade 10.9	
13	0771416	1	Bolt M14 x 40	
14	0860038	1	Box, Switch	
15	0861538	1	Control Box Assembly	
15	7024488	1	Card, Circuit - Generator Power	
15	See Note	NSS	Fuse (Note: Not Available - Purchase Locally)	
15	7024489	1	Card, Circuit - Control	
15	70000619	1	Harness, Control Box (Internal)	
16	0902888	1	Bracket	
17	0962520	1	Bushing	
18	2460048	1	Generator Assembly	
18	70001100	1	Rotor (Includes p/n 70001384 & 70000863) (Not Shown)	
18	70001384	1	Bearing, Ball Radial (Not Shown)	
18	70000863	1	Fan (Not Shown)	
18	70002088	1	Stator (Not Shown)	
18	70002297	1	Stud	
18	70003631	1	Brushholder Assembly (Not Shown)	
18A	70004171	1	Key	
18B	70001966	1	Bearing, Ball Radial (Located in Belt Tensioner Endbell)	
18B	70003708	1	Ring, Internal Retaining (Located in Belt Tensioner Endbell)	
18B	70003709	1	Ring, External Retaining (Located in Belt Tensioner Endbell)	
18C	70001953	1	Endbell, Belt Tensioner	
18D	70004169	1	Endbell, Brush Block	
18E	70004169	1	Shroud	
18E	See Note	NSS	Insulator, Endbell (Note: Not Available for Purchase)	
18E	7027799	1	Block, Connector 6 Position (Not Shown)	
18E	70002460	1	Nut, Brass (Attaches p/n 7027799 to Cover) (Not Shown)	
18E	7024485	1	Breaker, Circuit 30Amp (Not Shown)	
18E	70001696	1	Boot, Breaker (Not Shown)	
18E	7026626	1	Connector, 6 Position (Includes Seal) (Not Shown - Plugs into Item 39)	
18E	7026597	1	Connector, with Leads (Not Shown)	
18E	7026188	1	Clamp, Cable Options (Not Shown)	
18E	70004169	1	Plate, End Panel	
18E	70001974	1	Decal - Terminal Connections	
18F	70001973	1	Decal - Warning Moving Parts	
19	2820031	AR	Heat Shrink	

ITEM	PART NUMBER	QTY	DESCRIPTION	REV
20	3252764	1	Nameplate	
21	3290505	4	Nut M5	
22	3290605	4	Nut M6	
23	3290805	4	Nut M8	
24	3291201	1	Nut M12	
25	3331211	1	Nut M12	
26	3580317	1	Pulley	
27	3580318	1	Pulley	
28	3580320	1	Pulley	
29	3910606	4	Screw #6 x 3/8	
30	3960422	1	Gasket	
31	4032015	4	Bolt M10 x 55	
32	4060802	1	Guard, Switch	
33	4240099	AR	Tie-Strap (Not Shown)	
34	4360336	1	Switch, Toggle	
35	4460071	1	Connector, Strain Relief	
36	4460346	1	Receptacle	
37	4711600	1	Washer 3/8	
38	4811600	4	Washer M5	
39	4811700	8	Washer M6	
40	4811900	8	Washer M8	
41	4812100	1	Washer M12	
42	4812200	3	Washer M14	
43	4871700	2	Washer M6	
44	4922925	1	Harness, Generator (See ELECTRICAL SECTION for Breakdown)	
44	4460225	1	Plug, Male 6 Position (Plugs into Generator)	
44	See Note	NSS	Socket, Female (Use with 4460225)	
44	See Note	NSS	Seal, Plug (Use with 4460225)	
44	See Note	NSS	Seal, Interface (Use with 4460225)	
45	5241200	3	Washer M12 Hardened	
46	1001104029	4	Screw M5 x 30	
47	1001110873	1	Shield, Cover	
48	1001196382	1	Stud	
49	1001157592	1	Junction Box Assembly Options (See Items 101-121 for Breakdown)	
50	1001168018	1	Washer, Snubbing	
51	1001173925	1	Mount	
52	1001174675	1	Wiring Diagram (Not Shown - See ELECTRICAL SECTION for Breakdown)	
53	0760812	1	Bolt M8 x 25	
54	1321716	AR	Clamp	
55	1001148641	1	Bracket	
56	5250808	AR	Bolt M8 x 16	
57	5250810	AR	Bolt M8 x 20	
58	5260800	AR	Nut M8	
59	1001223122	1	Support **(SN 0300226844 through 0300272360, SN E300004186 through E300007988, SN 1300007289 through 1300007393, Except SN 0300272174 through 0300272184, Excluding E300007847)**	
	1001157592	Ref	JUNCTION BOX ASSEMBLY	C
101	1060343	1.5 ft /0.5m	Cable, Electrical 10/4	
102	1001179154	2.5 ft	Cable, Electrical 12/3	

ITEM	PART NUMBER	QTY	DESCRIPTION	REV
		/0.8m		
103	1671092	1	Cover	
104	3300396	1	Cover, Fuse	
105	3311001	6	Nut #10-24NC	
106	4360070	1	Circuit Breaker - 15Amp	
108	4460425	1	Connector, Strain Relief	
109	4460426	2	Connector, Strain Relief	
111	4460963	1	Connector	
112	4711000	10	Flatwasher, #10 Thin	
114	10702077	2	Screw #10-32NF x 3/8in	
115	10702082	2	Screw #10-32NF x 3/4in	
116	1001152525	1	Plug	
117	1001157520	1	Block, Terminal	
118	1001157521	1	Box, Junction	
119	1001157528	1	Decal - Wiring Schematic	
120	1001158007	1	Cover, PVC	
121	1001158008	2	Stand-Off	
	0273380	Ref	DECAL INSTALLATION	B
202	1705375	1	Decal - 240V - 3 Phase - 60Hz	
203	1705387	3	Decal - Hazardous Voltage	
204	1705460	2	Decal - SkyPower	

FIGURE 3-70. GENERATOR INSTALLATION - 7500W/60HZ (DEUTZ D2.9L4 ENGINE)

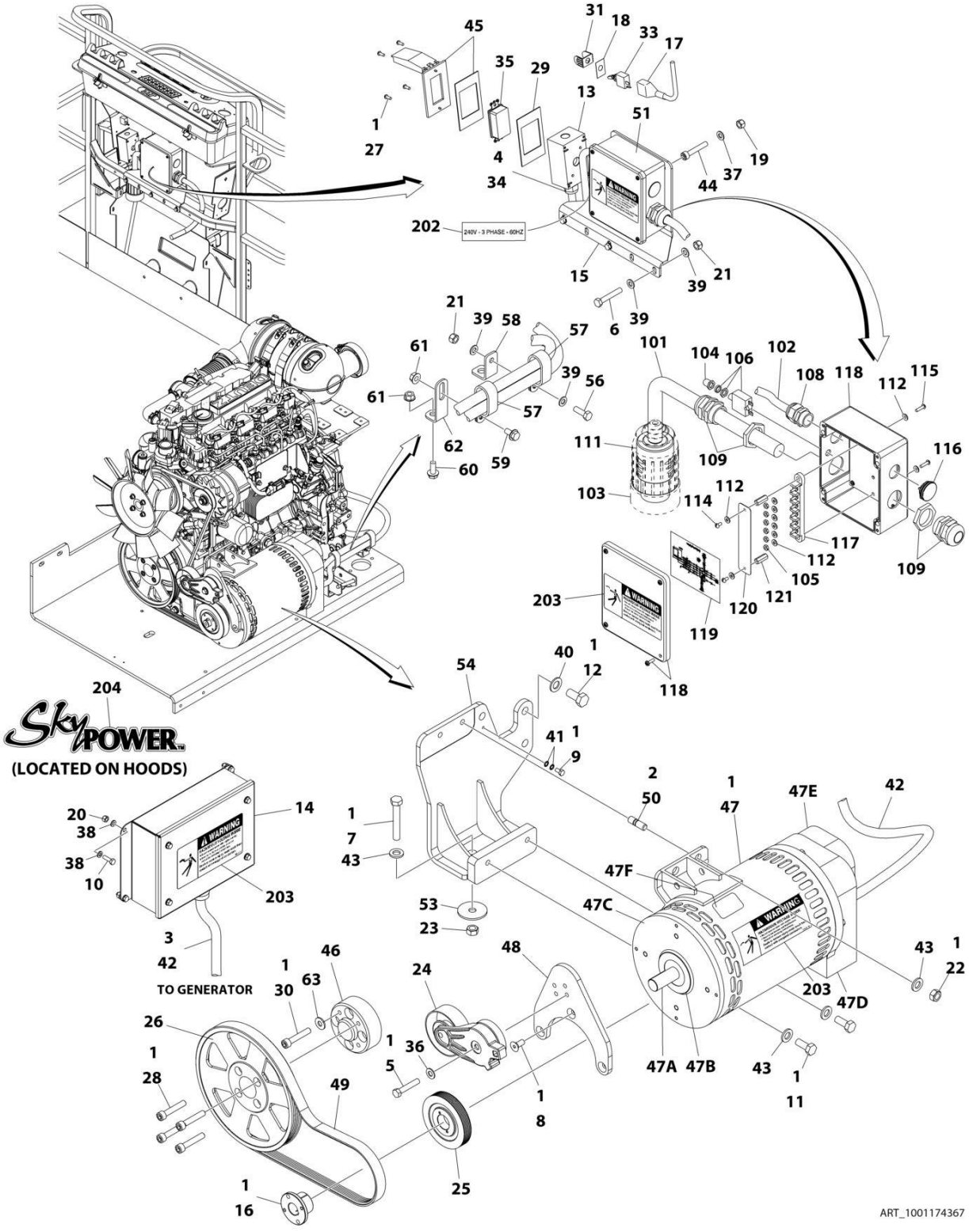

FIGURE 3-70. GENERATOR INSTALLATION - 7500W/60HZ (DEUTZ D2.9L4 ENGINE)

ITEM	PART NUMBER	QTY	DESCRIPTION	REV
	1001174367	Ref	GENERATOR INSTALLATION - 7500W/60Hz (DEUTZ D2.9L4 ENGINE)	H
1	0100011	AR	Compound, Locking	
2	0100019	AR	Compound, Locking	
3	0100048	AR	Grease, Dielectric	
4	0100079	AR	Sealant	
5	0641616	1	Bolt 3/8 x 2	
6	0700818	3	Bolt M8 x 50	
7	0711224	1	Bolt M12 x 80 Grade 10.9	
8	0741607	3	Screw 3/8 x 7/8	
9	0760606	1	Bolt M6 x 12	
10	0760610	4	Bolt M6 x 20	
11	0761212	2	Bolt M12 x 25	
12	0771414	3	Bolt M14 x 30 Grade 10.9	
13	0860038	1	Box, Switch	
14	0861538	1	Control Box Assembly	
14	7024488	1	Card, Circuit - Generator Power	
14	See Note	NSS	Fuse (Note: Not Available - Purchase Locally)	
14	7024489	1	Card, Circuit - Control	
14	70000619	1	Harness, Control Box (Internal)	
15	0902888	1	Bracket	
16	0962520	1	Bushing	
17	2820031	AR	Heat Shrink	
18	3252764	1	Nameplate	
19	3290505	4	Nut M5	
20	3290605	4	Nut M6	
21	3290805	4	Nut M8	
22	3291201	2	Nut M12	
23	3331211	1	Nut M12	
24	3580317	1	Pulley	
25	3580318	1	Pulley	
26	3580320	1	Pulley	
27	3910606	4	Screw #6 x 3/8	
28	3931628	4	Capscrew 3/8 x 1-3/4	
29	3960422	1	Gasket	
30	4032014	4	Bolt M10 x 50	
31	4060802	1	Guard, Switch	
32	4240099	AR	Tie-Strap (Not Shown)	
33	4360336	1	Switch, Toggle	
34	4460071	1	Connector, Strain Relief	
35	4460346	1	Receptacle	
36	4711600	1	Washer 3/8	
37	4811600	4	Washer M5	
38	4811700	8	Washer M6	
39	4811900	8	Washer M8	
40	4812200	3	Washer M14	
41	4871700	2	Washer M6	
42	4922925	1	Harness, Generator (See ELECTRICAL SECTION for Breakdown)	
42	4460225	1	Plug, Male 6 Position (Plugs into Generator)	
42	See Note	NSS	Socket, Female (Use with 4460225)	

ITEM	PART NUMBER	QTY	DESCRIPTION	REV
42	See Note	NSS	Seal, Plug (Use with 4460225)	
42	See Note	NSS	Seal, Interface (Use with 4460225)	
43	5241200	5	Washer M12 Hardened	
44	1001104029	4	Screw M5 x 30	
45	1001110873	1	Shield, Cover	
46	1001135679	1	Adapter	
47	1001136988	NLA	Generator Assembly (Use p/n 1001212223) **(SN 0300203771 through 0300226192)**	
47	1001212223	1	Generator Assembly **(SN 0300226193 through 0300272360, Except SN 0300272174 through 0300272184)**	
47	70001100	1	Rotor (Includes p/n 70001384 & 70000863) (Not Shown)	
47	70001384	1	Bearing, Ball Radial (Not Shown)	
47	70000863	1	Fan (Not Shown)	
47	70004093	1	Stator (Not Shown) (1001136988 Generator)	
47	70006093	1	Stator (Not Shown) (1001212223 Generator)	
47	70002297	1	Stud	
47	70003631	1	Brushholder Assembly (Not Shown)	
47A	70004099	1	Key	
47B	70001966	1	Bearing, Ball Radial (Located in Belt Tensioner Endbell)	
47B	70003708	1	Ring, Internal Retaining (Located in Belt Tensioner Endbell)	
47B	70003709	1	Ring, External Retaining (Located in Belt Tensioner Endbell)	
47C	70004092	1	Endbell, Belt Tensioner	
47D	70004094	1	Endbell, Brush Block	
47E	70004096	1	Shroud (1001136988 Generator)	
47E	70006094	1	Shroud (1001212223 Generator)	
47E	70004097	1	Insulator, Endbell (1001136988 Generator)	
47E	70002291	1	Insulator, Endbell (1001212223 Generator)	
47E	7027799	1	Block, Connector 6 Position (Not Shown)	
47E	70002460	1	Nut, Brass (Attaches p/n 7027799 to Cover) (Not Shown)	
47E	7024485	1	Breaker, Circuit 30Amp (Not Shown) (1001136988 Generator)	
47E	70006095	1	Breaker, Circuit 30Amp (Not Shown) (1001212223 Generator)	
47E	70001696	1	Boot, Breaker (Not Shown) (1001136988 Generator)	
47E	70006096	1	Guard, Breaker (Not Shown) (1001212223 Generator)	
47E	7026626	1	Connector, 6 Position (Includes Seal) (Not Shown - Plugs into Item 36)	
47E	7026597	1	Connector, with Leads (Not Shown)	
47E	70004098	1	Clamp, Cable (Not Shown)	
47E	70004095	1	Plate, End Panel (1001136988 Generator)	
47E	70006097	1	Plate, End Panel (1001212223 Generator)	
47E	70001974	1	Decal - Terminal Connections	
47F	70001973	1	Decal - Warning Moving Parts	
48	1001142643	1	Support	
49	1001142646	1	Belt	
50	1001155041	2	Stud	
51	1001157592	1	Junction Box Assembly Options (See Items 101-121 for Breakdown)	
53	1001168018	1	Washer, Snubbing	
54	1001168207	1	Support	
55	1001174675	1	Wiring Diagram (Not Shown - See ELECTRICAL SECTION for Breakdown)	
56	0760812	1	Bolt M8 x 25	
57	1321716	AR	Clamp	

ITEM	PART NUMBER	QTY	DESCRIPTION	REV
58	1001148641	1	Bracket	
59	5250808	AR	Bolt M8 x 16	
60	5250810	AR	Bolt M8 x 20	
61	5260800	AR	Nut M8	
62	1001223122	1	Support **(SN 0300226844 through 0300272360, Except SN 0300272174 through 0300272184)**	
63	4812000	AR	Washer M10	
	1001157592	Ref	JUNCTION BOX ASSEMBLY	C
101	1060343	1.5 ft/ 0.5m	Cable, Electrical 10/4	
102	1001179154	2.5 ft/ 0.8m	Cable, Electrical 12/3	
103	1671092	1	Cover	
104	3300396	1	Cover, Fuse	
105	3311001	6	Nut #10-24NC	
106	4360070	1	Circuit Breaker - 15Amp	
108	4460425	1	Connector, Strain Relief	
109	4460426	2	Connector, Strain Relief	
111	4460963	1	Connector	
112	4711000	10	Flatwasher, #10 Thin	
114	10702077	2	Screw #10-32NF x 3/8in	
115	10702082	2	Screw #10-32NF x 3/4in	
116	1001152525	1	Plug	
117	1001157520	1	Block, Terminal	
118	1001157521	1	Box, Junction	
119	1001157528	1	Decal - Wiring Schematic	
120	1001158007	1	Cover, PVC	
121	1001158008	2	Stand-Off	
	0273380	Ref	DECAL INSTALLATION	B
202	1705375	1	Decal - 240V - 3 Phase - 60Hz	
203	1705387	3	Decal - Hazardous Voltage	
204	1705460	2	Decal - SkyPower	

FIGURE 3-71. GENERATOR INSTALLATION - 7500W/60HZ (GM ENGINE)

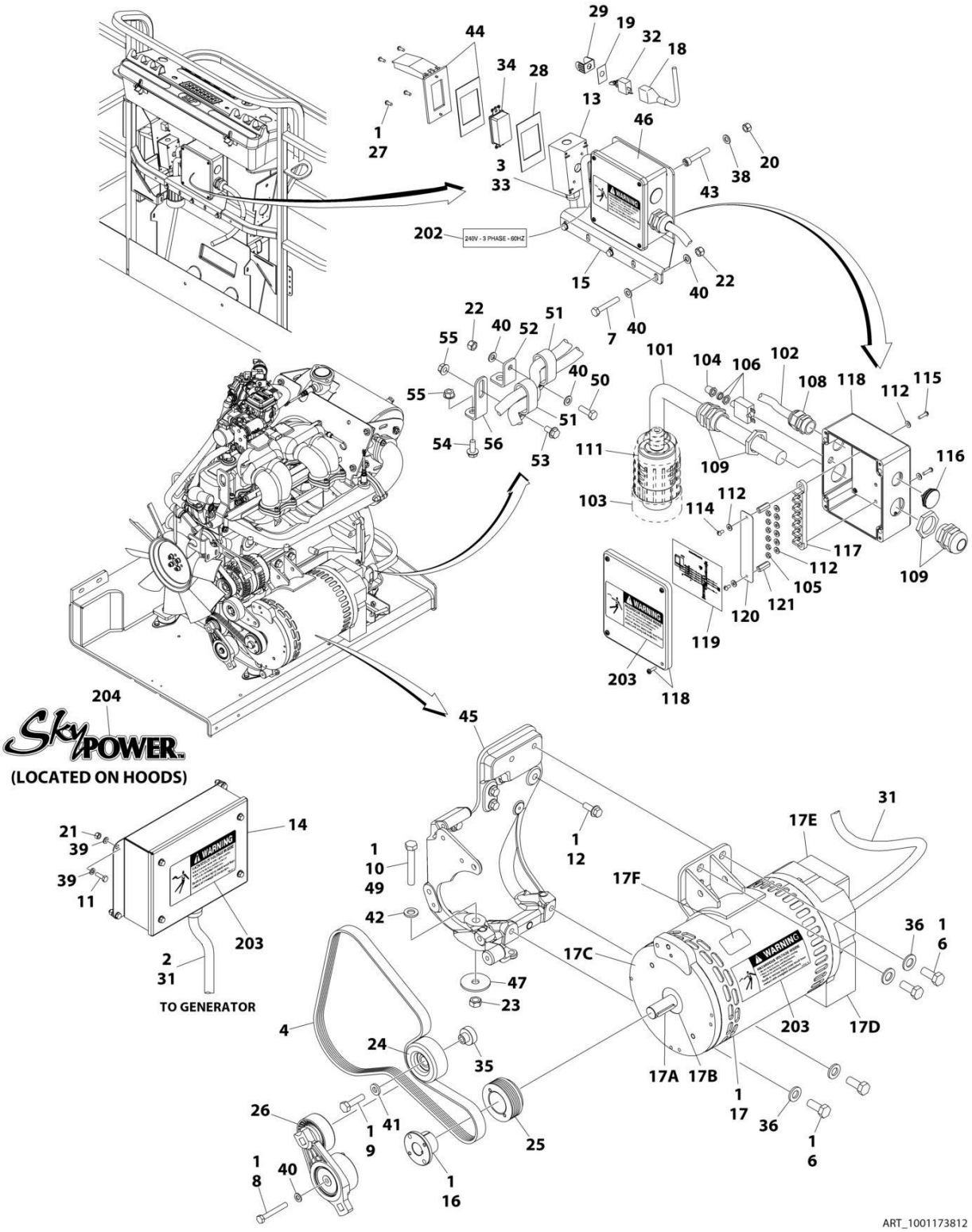

FIGURE 3-71. GENERATOR INSTALLATION - 7500W/60HZ (GM ENGINE)

ITEM	PART NUMBER	QTY	DESCRIPTION	REV
	1001173812	Ref	GENERATOR INSTALLATION - 7500W/60HZ (GM ENGINE)	E
1	0100011	AR	Compound, Locking	
2	0100048	AR	Grease, Dielectric	
3	0100079	AR	Sealant	
4	0480142	1	Belt	
6	0641808	4	Bolt 1/2 x 1	
7	0700818	3	Bolt M8 x 50	
8	0700820	1	Bolt M8 x 60	
9	0701016	1	Bolt M10 x 40	
10	0711227	1	Bolt M12 x 100	
11	0760610	4	Bolt M6 x 20	
12	0811608	4	Screw 3/8 x 1	
13	0860038	1	Box, Switch	
14	0861538	1	Control Box Assembly	
14	7024488	1	Card, Circuit - Generator Power	
14	See Note	NSS	Fuse (Note: Not Available - Purchase Locally)	
14	7024489	1	Card, Circuit - Control	
14	70000619	1	Harness, Control Box (Internal)	
15	0902888	1	Bracket	
16	0962520	1	Bushing	
17	2460048	1	Generator Assembly	
17	70001100	1	Rotor (Includes p/n 70001384 & 70000863) (Not Shown)	
17	70001384	1	Bearing, Ball Radial (Not Shown)	
17	70000863	1	Fan (Not Shown)	
17	70002088	1	Stator (Not Shown)	
17	70002297	1	Stud	
17	70003631	1	Brushholder Assembly (Not Shown)	
17A	70004171	1	Key	
17B	70001966	1	Bearing, Ball Radial (Located in Belt Tensioner Endbell)	
17B	70003708	1	Ring, Internal Retaining (Located in Belt Tensioner Endbell)	
17B	70003709	1	Ring, External Retaining (Located in Belt Tensioner Endbell)	
17C	70001953	1	Endbell, Belt Tensioner	
17D	70004169	1	Endbell, Brush Block	
17E	70004169	1	Shroud	
17E	See Note	NSS	Insulator, Endbell (Note: Not Available for Purchase)	
17E	7027799	1	Block, Connector - 6 Position (Not Shown)	
17E	70002460	1	Nut, Brass (Attaches p/n 7027799 to Cover) (Not Shown)	
17E	7024485	1	Breaker, Circuit 30Amp (Not Shown)	
17E	70001696	1	Boot, Breaker (Not Shown)	
17E	7026626	1	Connector - 6 Position (Includes Seal) (Not Shown - Plugs into Item 39)	
17E	7026597	1	Connector, with Leads (Not Shown)	
17E	7026188	1	Clamp, Cable Options (Not Shown)	
17E	70004169	1	Plate, End Panel	
17E	70001974	1	Decal - Terminal Connections	
17F	70001973	1	Decal - Warning Moving Parts	
18	2820031	AR	Heat Shrink	
19	3252764	1	Nameplate	
20	3290505	4	Nut M5	
21	3290605	4	Nut M6	

ITEM	PART NUMBER	QTY	DESCRIPTION	REV
22	3290805	4	Nut M8	
23	3331211	1	Nut M12	
24	3580312	1	Pulley	
25	3580314	1	Pulley	
26	3580348	1	Pulley	
27	3910606	4	Screw #6 x 3/8	
28	3960422	1	Gasket	
29	4060802	1	Guard, Switch	
30	4240099	AR	Tie-Strap (Not Shown)	
31	4922925	1	Harness, Generator (See ELECTRICAL SECTION for Breakdown)	
31	4460225	1	Plug, Male - 6 Position (Plugs into Generator)	
31	See Note	NSS	Socket, Female (Use with 4460225)	
31	See Note	NSS	Seal, Plug (Use with 4460225)	
31	See Note	NSS	Seal, Interface (Use with 4460225)	
32	4360336	1	Switch, Toggle	
33	4460071	1	Connector, Strain Relief	
34	4460346	1	Receptacle	
35	4568735	1	Spacer	
36	4711800	4	Washer 1/2	
38	4811600	4	Washer M5	
39	4811700	8	Washer M6	
40	4811900	9	Washer M8	
41	4891600	1	Washer 3/8	
42	5241200	1	Washer M12 Hardened	
43	1001104029	4	Screw M5 x 30	
44	1001110873	1	Shield, Cover	
45	1001141181	1	Support	
46	1001157592	1	Junction Box Assembly Options (See Items 101-121 for Breakdown)	
47	1001168018	1	Washer, Snubbing	
48	1001174675	1	Wiring Diagram (Not Shown - See ELECTRICAL SECTION for Breakdown)	
49	0711221	1	Bolt M12 x 65 Grade 10.9	
50	0760812	1	Bolt M8 x 25	
51	1321716	AR	Clamp	
52	1001148641	1	Bracket	
53	5250808	AR	Bolt M8 x 16	
54	5250810	AR	Bolt M8 x 20	
55	5260800	AR	Nut M8	
56	1001223122	1	Support	
	1001157592	Ref	JUNCTION BOX ASSEMBLY	C
101	1060343	1.5 ft /0.5m	Cable, Electrical 10/4	
102	1001179154	2.5 ft /0.8m	Cable, Electrical 12/3	
103	1671092	1	Cover	
104	3300396	1	Cover, Fuse	
105	3311001	6	Nut #10-24NC	
106	4360070	1	Circuit Breaker - 15Amp	
108	4460425	1	Connector, Strain Relief	
109	4460426	2	Connector, Strain Relief	
111	4460963	1	Connector	

ITEM	PART NUMBER	QTY	DESCRIPTION	REV
112	4711000	10	Flatwasher, #10 Thin	
114	10702077	2	Screw #10-32NF x 3/8in	
115	10702082	2	Screw #10-32NF x 3/4in	
116	1001152525	1	Plug	
117	1001157520	1	Block, Terminal	
118	1001157521	1	Box, Junction	
119	1001157528	1	Decal - Wiring Schematic	
120	1001158007	1	Cover, PVC	
121	1001158008	2	Stand-Off	
	0273380	Ref	DECAL INSTALLATION	B
202	1705375	1	Decal - 240V-3 Phase-60Hz	
203	1705387	3	Decal - Hazardous Voltage	
204	1705460	2	Decal - SkyPower	

FIGURE 3-72. GENERATOR INSTALLATION - 7500W/60HZ (KUBOTA ENGINE)

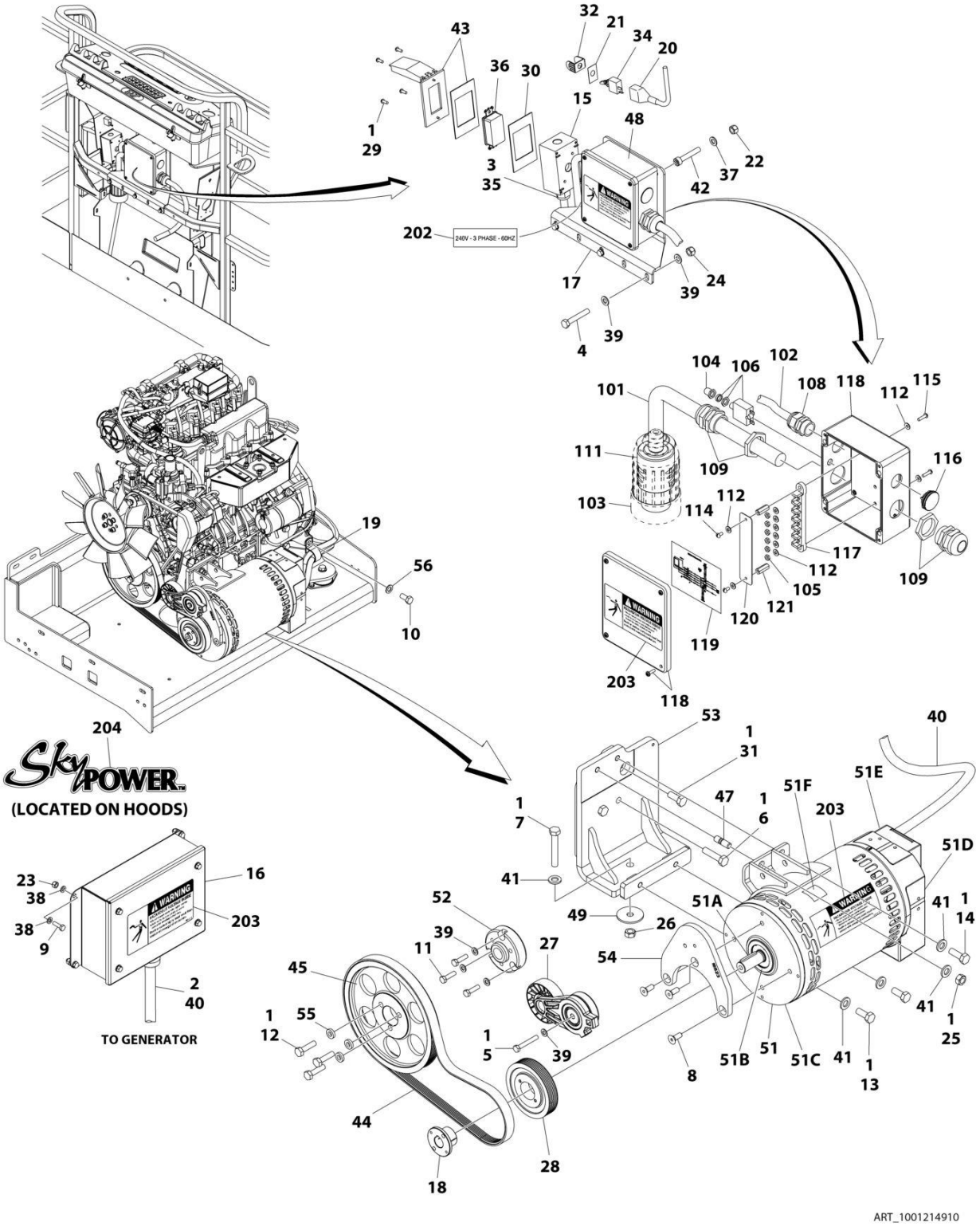

FIGURE 3-72. GENERATOR INSTALLATION - 7500W/60HZ (KUBOTA ENGINE)

ITEM	PART NUMBER	QTY	DESCRIPTION	REV
	1001214910	Ref	GENERATOR INSTALLATION - 7500W/60HZ (KUBOTA ENGINE)	C
1	0100011	AR	Compound, Locking	
2	0100048	AR	Grease, Dielectric	
3	0100079	AR	Sealant	
4	0700818	3	Bolt M8 x 50	
5	0700819	1	Bolt M8 x 55	
6	1001217344	2	Bolt M12 x 50	
7	0711224	AR	Bolt M12 x 80 Grade 10.9	
7	0701224	AR	Bolt M12 x 80	
8	0741608	3	Screw 3/8 x 1	
9	0760610	4	Bolt M6 x 20	
10	1001217345	1	Bolt M14 x 30	
11	0760814	3	Bolt M8 x 30	
12	0701016	3	Bolt M10 x 40	
13	0761214	2	Bolt M12 x 30	
14	0761215	1	Bolt M12 x 35	
15	0860038	1	Box, Switch	
16	0861538	1	Control Box Assembly	
16	7024488	1	Card, Circuit - Generator Power	
16	See Note	NSS	Fuse (Note: Not Available - Purchase Locally)	
16	7024489	1	Card, Circuit - Control	
16	70000619	1	Harness, Control Box (Internal)	
17	0902888	1	Bracket	
18	0962520	1	Bushing	
19	84521062	1	Clamp	
20	2820031	AR	Heat Shrink	
21	3252764	1	Nameplate	
22	3290505	4	Nut M5	
23	3290605	4	Nut M6	
24	3290805	3	Nut M8	
25	3291201	AR	Nut M12	
26	3331211	AR	Nut M12	
27	3580317	1	Pulley	
28	3580318	1	Pulley	
29	3910606	4	Screw #6 x 3/8	
30	3960422	1	Gasket	
31	1001217342	1	Bolt M12 x 30	
32	4060802	1	Guard, Switch	
33	4240099	AR	Tie-Strap (Not Shown)	
34	4360336	1	Switch, Toggle	
35	4460071	1	Connector, Strain Relief	
36	4460346	1	Receptacle	
37	4811600	4	Washer M5	
38	4811700	8	Washer M6	
39	4811900	10	Washer M8	
40	4922925	1	Harness, Generator	
40	4460225	1	Plug, Male - 6 Position (Plugs into Generator)	
40	See Note	NSS	Socket, Female (Use with 4460225)	
40	See Note	NSS	Seal, Plug (Use with 4460225)	
40	See Note	NSS	Seal, Interface (Use with 4460225)	

ITEM	PART NUMBER	QTY	DESCRIPTION	REV
41	5241200	5	Washer M12 Hardened	
42	1001104029	4	Screw M5 x 30	
43	1001110873	1	Shield, Cover	
44	0480129	1	Belt	
45	1001147233	1	Pulley	
47	1001155041	1	Stud	
48	1001157592	1	Junction Box Assembly (See Items 101-121 for Breakdown)	
49	1001168018	1	Washer, Snubbing	
50	1001174675	1	Wiring Diagram (Not Shown - See ELECTRICAL SECTION for Breakdown)	
51	1001212223	1	Generator Assembly	
51	70001100	1	Rotor (Includes p/n 70001384 & 70000863) (Not Shown)	
51	70001384	1	Bearing, Ball Radial (Not Shown)	
51	70000863	1	Fan (Not Shown)	
51	70006093	1	Stator (Not Shown)	
51	70002297	1	Stud	
51	70003631	1	Brushholder Assembly (Not Shown)	
51A	70004099	1	Key	
51B	70001966	1	Bearing, Ball Radial (Located in Belt Tensioner Endbell)	
51B	70003708	1	Ring, Internal Retaining (Located in Belt Tensioner Endbell)	
51B	70003709	1	Ring, External Retaining (Located in Belt Tensioner Endbell)	
51C	70004092	1	Endbell, Belt Tensioner	
51D	70004094	1	Endbell, Brush Block	
51E	70006094	1	Shroud	
51E	70002291	1	Insulator, Endbell	
51E	7027799	1	Block, Connector 6 Position (Not Shown)	
51E	70002460	1	Nut, Brass (Attaches p/n 7027799 to Cover) (Not Shown)	
51E	70006095	1	Breaker, Circuit 30Amp (Not Shown)	
51E	70006096	1	Guard, Breaker (Not Shown)	
51E	7026626	1	Connector, 6 Position (Includes Seal) (Not Shown - Plugs into Item 36)	
51E	70004098	1	Clamp, Cable (Not Shown)	
51E	70006097	1	Plate, End Panel	
51E	70001974	1	Decal - Terminal Connections	
51F	70001973	1	Decal - Warning Moving Parts	
52	1001213029	1	Adapter, Pulley	
53	1001214546	1	Support	
54	1001215523	1	Support	
55	1001216805	3	Spacer	
56	4812200	1	Washer M14	
	1001157592	Ref	JUNCTION BOX ASSEMBLY	C
101	1060343	1.5 ft/ 0.5m	Cable, Electrical 10/4	
102	1001179154	2.5 ft/ 0.8m	Cable, Electrical 12/3	
103	1671092	1	Cover	
104	3300396	1	Cover, Fuse	
105	3311001	6	Nut #10	
106	4360070	1	Circuit Breaker - 15Amp	
108	4460425	1	Connector, Strain Relief	
109	4460426	2	Connector, Strain Relief	
111	4460963	1	Connector	

ITEM	PART NUMBER	QTY	DESCRIPTION	REV
112	4711000	10	Washer #10	
114	10702077	2	Screw #10 x 3/8in	
115	10702082	2	Screw #10 x 3/4in	
116	1001152525	1	Plug	
117	1001157520	1	Block, Terminal	
118	1001157521	1	Box, Junction	
119	1001157528	1	Decal - Wiring Schematic	
120	1001158007	1	Cover, PVC	
121	1001158008	2	Stand-Off	
	0273380	Ref	DECAL INSTALLATION	B
202	1705375	1	Decal - 240V-3 Phase-60Hz	
203	1705387	3	Decal - Hazardous Voltage	
204	1705460	2	Decal - SkyPower	

SECTION 4 - BOOM

FIGURE 4-1. BOOM AND CYLINDERS INSTALLATION - 400S (EUROPEAN BUILT)

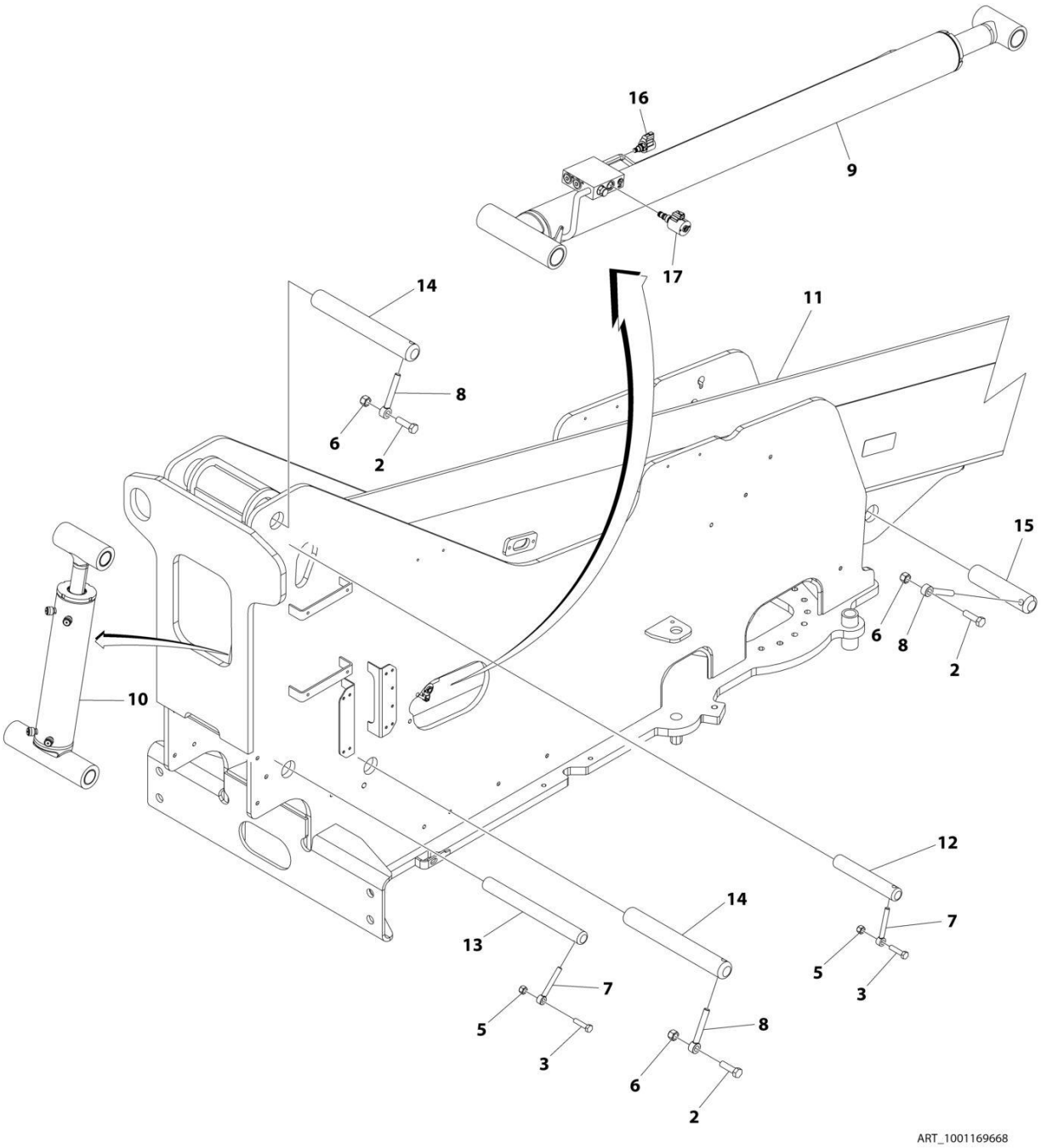

FIGURE 4-1. BOOM AND CYLINDERS INSTALLATION - 400S (EUROPEAN BUILT)

ITEM	PART NUMBER	QTY	DESCRIPTION	REV
	1001169668	Ref	BOOM AND CYLINDERS INSTALLATION - 400S	G
2	0701619	3	Bolt, M16 x 55	
3	0761218	2	Bolt, M12 x 50	
5	3291205	2	Nut, Lock M12 x 1.75	
6	3291605	3	Nut, Lock M16 x 2	
7	3841203	2	Keeper, Pin	
8	3841258	3	Keeper, Pin	
9	1001163384	NLA	Lift Cylinder Assembly (Use p/n 1001198885) (See CYLINDER SECTION for Breakdown) **(SN 0300203771 through 0300204034)**	
9	1001198885	1	Lift Cylinder Assembly (See CYLINDER SECTION for Breakdown) **(SN 0300204035 through 0300226846, SN E300000100 through E3000004457)**	
9	1001206321	NLA	Lift Cylinder Assembly (Use p/n 1001228092) (See CYLINDER SECTION for Breakdown) **(SN 0300226847 through 0300243703, SN E3000004458 through E300005607, SN 1300007289 through 1300007393)**	
9	1001228092	1	Lift Cylinder Assembly (See CYLINDER SECTION for Breakdown) **(SN 0300243704 through 0300272360, SN E300005608 through E300007988, Except SN 0300272174 through 0300272184, Excluding E300007847)**	
10	1001163385	1	Master Cylinder Assembly (See CYLINDER SECTION for Breakdown)	
11	1001163458	1	Main Boom Assembly - 400S (See MAIN BOOM ASSEMBLY - 400S for Breakdown)	
12	1001168843	1	Pin	
13	1001168844	1	Pin	
14	1001168845	2	Pin	
15	1001168854	1	Pin	
16	1001148972	1	Valve, Poppet **(SN 0300203771 through 0300226846, SN E300000100 through E300004457)**	
16	70002401	1	Cartridge, Solenoid Valve	
16	7017496	1	Seal Kit - 70002401 Valve	
16	70003788	1	Coil	
16	1001206625	1	Valve, Solenoid Cartridge with Coil **(SN 0300226847 through 0300243703, SN E3000004458 through E300005607, SN 1300007289 through 1300007393)**	
16	70006104	1	Valve, Solenoid Cartridge Less Coil	
16	70006105	1	Seal Kit - 70006104 & 1001206625 Valves	
16	70003788	1	Coil	
16	7022390	1	Nut, Coil	
17	1001164709	1	Valve, Poppet (Normally Closed) **(SN 0300203771 through 0300243703, SN E300000100 through E300005607)**	
17	7017467	1	Cartridge, Solenoid Valve	
17	7012967	1	Seal Kit - 7017467 Valve	
17	70002386	1	Coil	

FIGURE 4-2. BOOM AND CYLINDERS INSTALLATION - 400S (US BUILT) (SN 0300255280 through 0300272360)

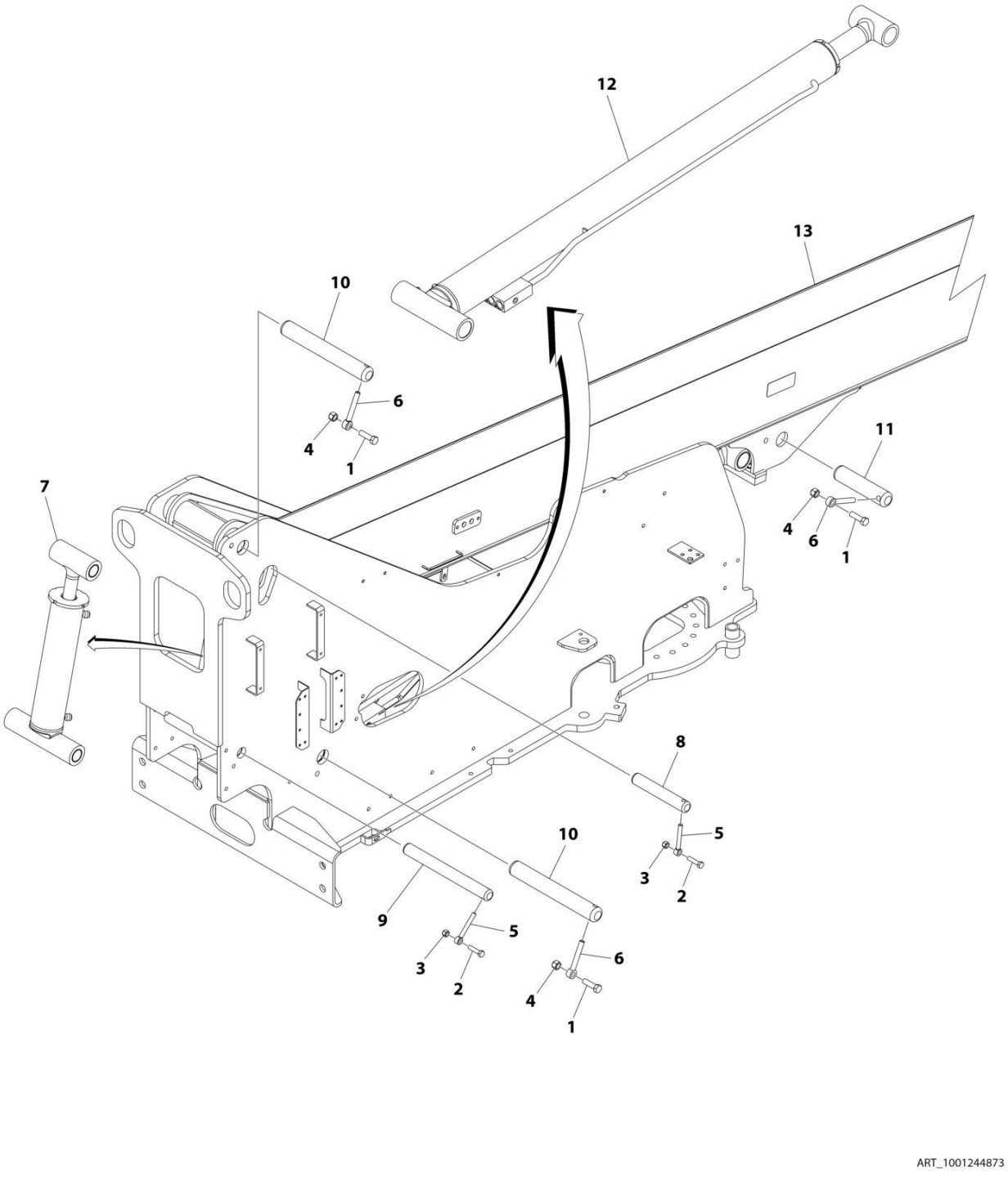

FIGURE 4-2. BOOM AND CYLINDERS INSTALLATION - 400S (US BUILT) (SN 0300255280 through 0300272360)

ITEM	PART NUMBER	QTY	DESCRIPTION	REV
	1001244873	Ref	BOOM AND CYLINDERS INSTALLATION	A
1	0701619	3	Bolt, M16 x 55	
2	0761218	2	Bolt, M12 x 50	
3	3291205	2	Nut, Lock M12 x 1.75	
4	3291605	3	Nut, Lock M16 x 2	
5	3841203	2	Keeper, Pin	
6	3841258	3	Keeper, Pin	
7	1001163385	1	Master Cylinder Assembly (See Separate Breakdown in CYLINDER SECTION)	
8	1001168843	1	Pin	
9	1001168844	1	Pin	
10	1001168845	2	Pin	
11	1001168854	1	Pin	
12	1001228092	1	Lift Cylinder Assembly (See Separate Breakdown in CYLINDER SECTION)	
13	1001244874	1	Main Boom Assembly (See Separate Breakdown in this Section)	

FIGURE 4-3. BOOM AND CYLINDERS INSTALLATION - 460SJ (SN 0300203771 through 0300272360, SN E300000100 through E300004333)

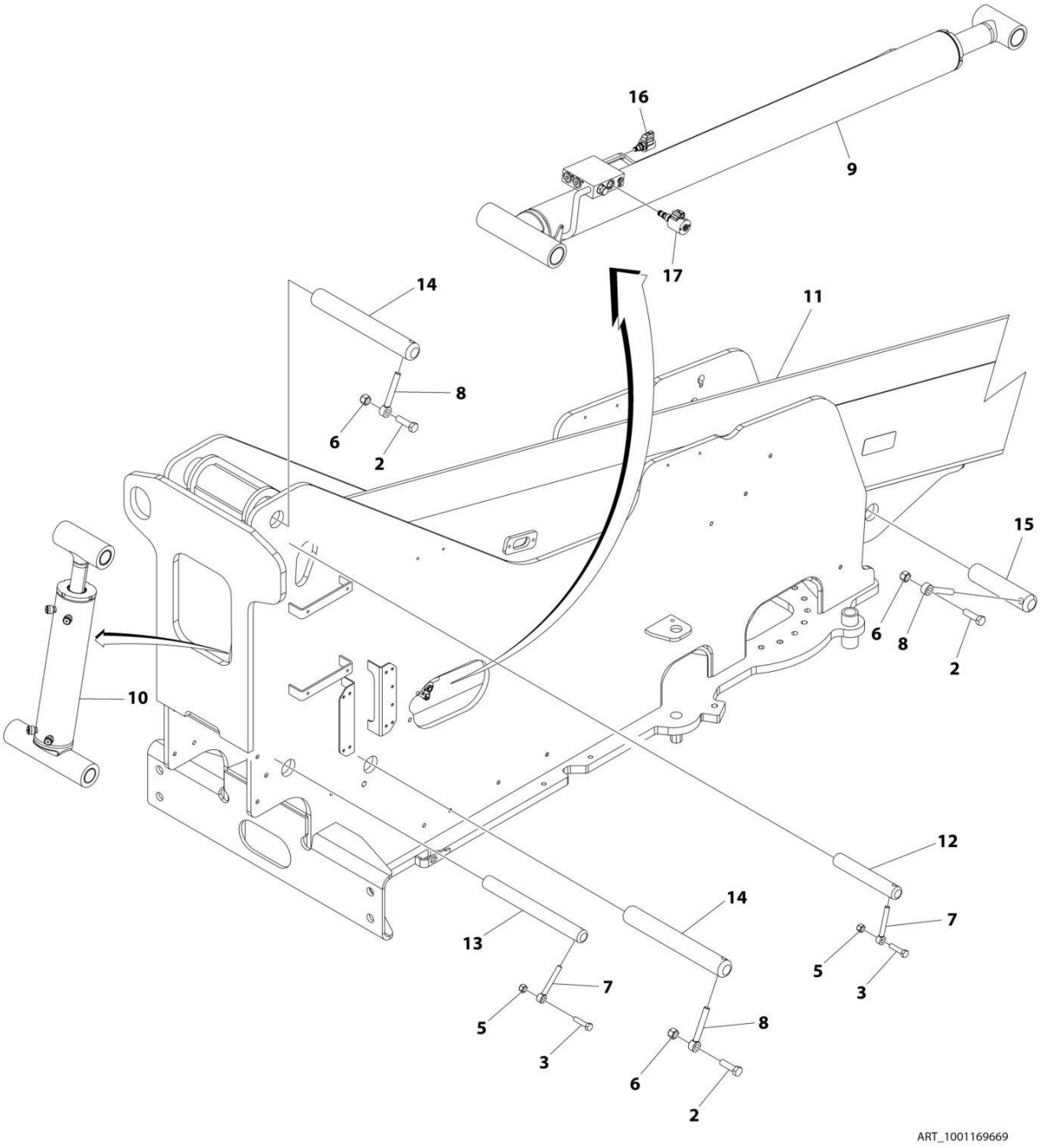

FIGURE 4-3. BOOM AND CYLINDERS INSTALLATION - 460SJ (SN 0300203771 through 0300272360, SN E300000100 through E300004333)

ITEM	PART NUMBER	QTY	DESCRIPTION	REV
	1001169669	Ref	BOOM AND CYLINDERS INSTALLATION - 460SJ	G
2	0701619	3	Bolt M16 x 55	
3	0761218	2	Bolt M12 x 50	
5	3291205	2	Nut, Lock M12 x 1.75	
6	3291605	3	Nut, Lock M16 x 2	
7	3841203	2	Keeper, Pin	
8	3841258	3	Keeper, Pin	
9	1001163384	NLA	Lift Cylinder Assembly (Use p/n 1001198885) (See CYLINDER SECTION for Breakdown) **(SN 0300203771 through 0300204034)**	
9	1001198885	1	Lift Cylinder Assembly (See CYLINDER SECTION for Breakdown) **(SN 0300204035 through 0300226846, SN E300000100 through E300004333)**	
9	1001206321	NLA	Lift Cylinder Assembly (Use p/n 1001228092) (See CYLINDER SECTION for Breakdown) **(SN 0300226847 through 0300243703)**	
9	1001228092	1	Lift Cylinder Assembly (See CYLINDER SECTION for Breakdown) **(SN 0300243704 through 0300272360, Except SN 0300272174 through 0300272184)**	
10	1001163385	1	Master Cylinder Assembly (See CYLINDER SECTION for Breakdown)	
11	1001163482	1	Main Boom Assembly - 460SJ (See MAIN BOOM ASSEMBLY - 460SJ for Breakdown)	
12	1001168843	1	Pin	
13	1001168844	1	Pin	
14	1001168845	2	Pin	
15	1001168854	1	Pin	
16	1001148972	1	Valve, Poppet **(SN 0300203771 through 0300226846, SN E300000100 through E300004333)**	
16	70002401	1	Cartridge, Solenoid Valve	
16	7017496	1	Seal Kit - 70002401 Valve	
16	70003788	1	Coil	
16	1001206625	1	Valve, Solenoid Cartridge with Coil **(SN 0300226847 through 0300243703)**	
16	70006104	1	Valve, Solenoid Cartridge Less Coil	
16	70006105	1	Seal Kit - 70006104 & 1001206625 Valves	
16	70003788	1	Coil	
16	7022390	1	Nut, Coil	
17	1001164709	1	Valve, Poppet (Normally Closed) **(SN 0300203771 through 0300243703, SN E300000100 through E300004333)**	
17	7017467	1	Cartridge, Solenoid Valve	
17	7012967	1	Seal Kit - 7017467 Valve	
17	70002386	1	Coil	

FIGURE 4-4. BOOM AND CYLINDERS INSTALLATION - 460SJ (SN E300004334 through E300007988, SN 1300007289 through 1300007393)

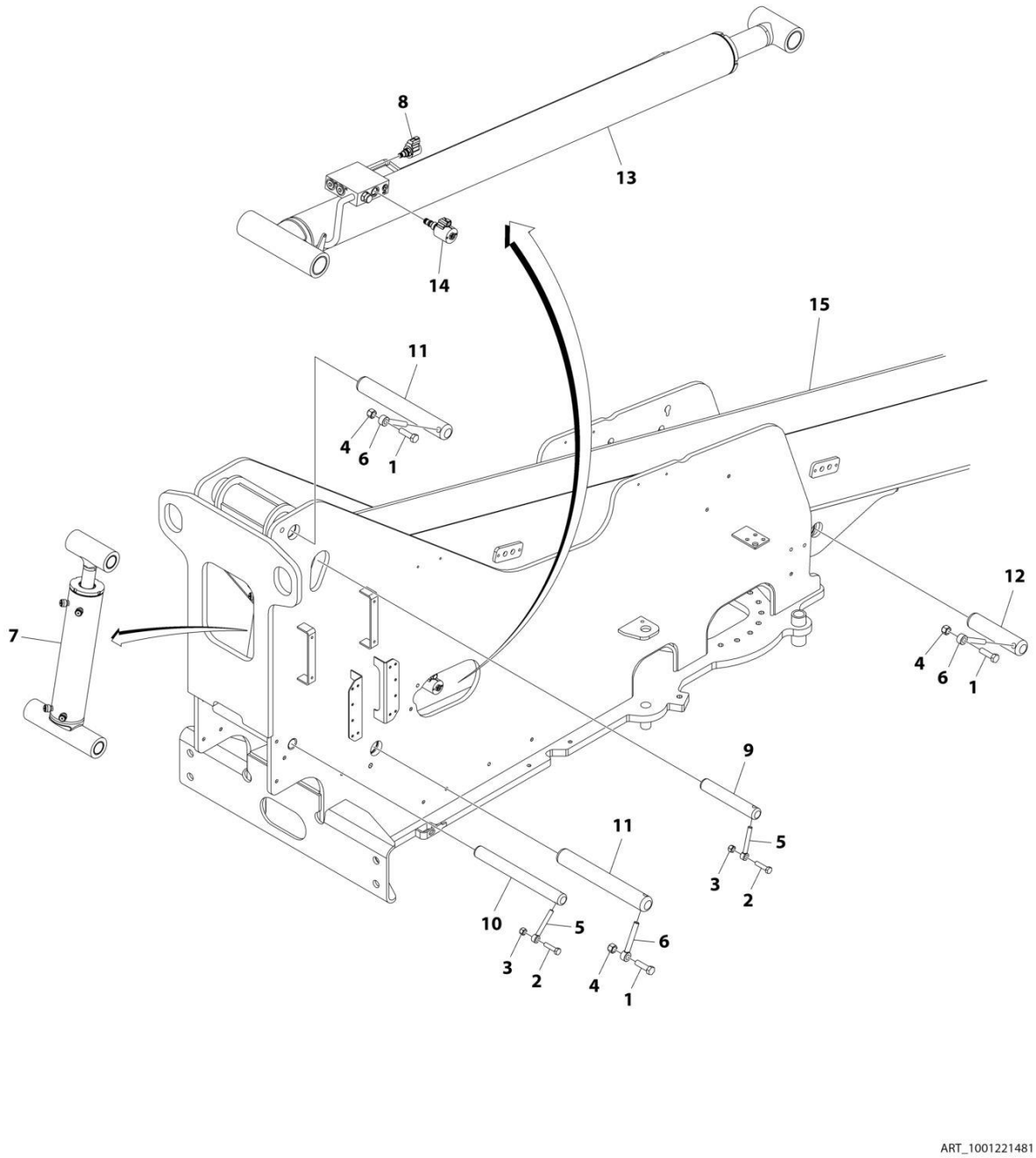

FIGURE 4-4. BOOM AND CYLINDERS INSTALLATION - 460SJ (SN E300004334 through E300007988, SN 1300007289 through 1300007393)

ITEM	PART NUMBER	QTY	DESCRIPTION	REV
	1001221481	Ref	BOOM AND CYLINDERS INSTALLATION - 460SJ	C
1	0701619	3	Bolt, M16 x 55	
2	0761218	2	Bolt, M12 x 50	
3	3291205	2	Nut, Lock M12 x 1.75	
4	3291605	3	Nut, Lock M16 x 2	
5	3841203	2	Keeper, Pin	
6	3841258	3	Keeper, Pin	
7	1001163385	1	Master Cylinder Assembly (See CYLINDER SECTION for Breakdown)	
8	1001164709	1	Valve, Poppet (Normally Closed) **(SN E300004334 through E300005607)**	
8	7017467	1	Cartridge, Solenoid Valve	
8	7012967	1	Seal Kit - 7017467 Valve	
8	70002386	1	Coil	
9	1001168843	1	Pin	
10	1001168844	1	Pin	
11	1001168845	2	Pin	
12	1001168854	1	Pin	
13	1001206321	NLA	Lift Cylinder Assembly (Use p/n 1001228092) (See CYLINDER SECTION for Breakdown) **(SN 1300007289 through 1300007393, SN E3000004334 through E300005607)**	
13	1001228092	1	Lift Cylinder Assembly (See CYLINDER SECTION for Breakdown) **(SN E300005608 through E300007988, Excluding E300007847)**	
14	1001206625	1	Valve, Solenoid Cartridge with Coil **(SN 1300007289 through 1300007393, SN E300004334 through E300005607)**	
14	70006104	1	Valve, Solenoid Cartridge Less Coil	
14	70006105	1	Seal Kit - 1001206625 Valves	
14	70003788	1	Coil	
14	7022390	1	Nut, Coil	
15	1001221482	1	Main Boom Assembly - 460SJ (See MAIN BOOM ASSEMBLY - 460SJ for Breakdown)	

FIGURE 4-5. MAIN BOOM ASSEMBLY - 400S

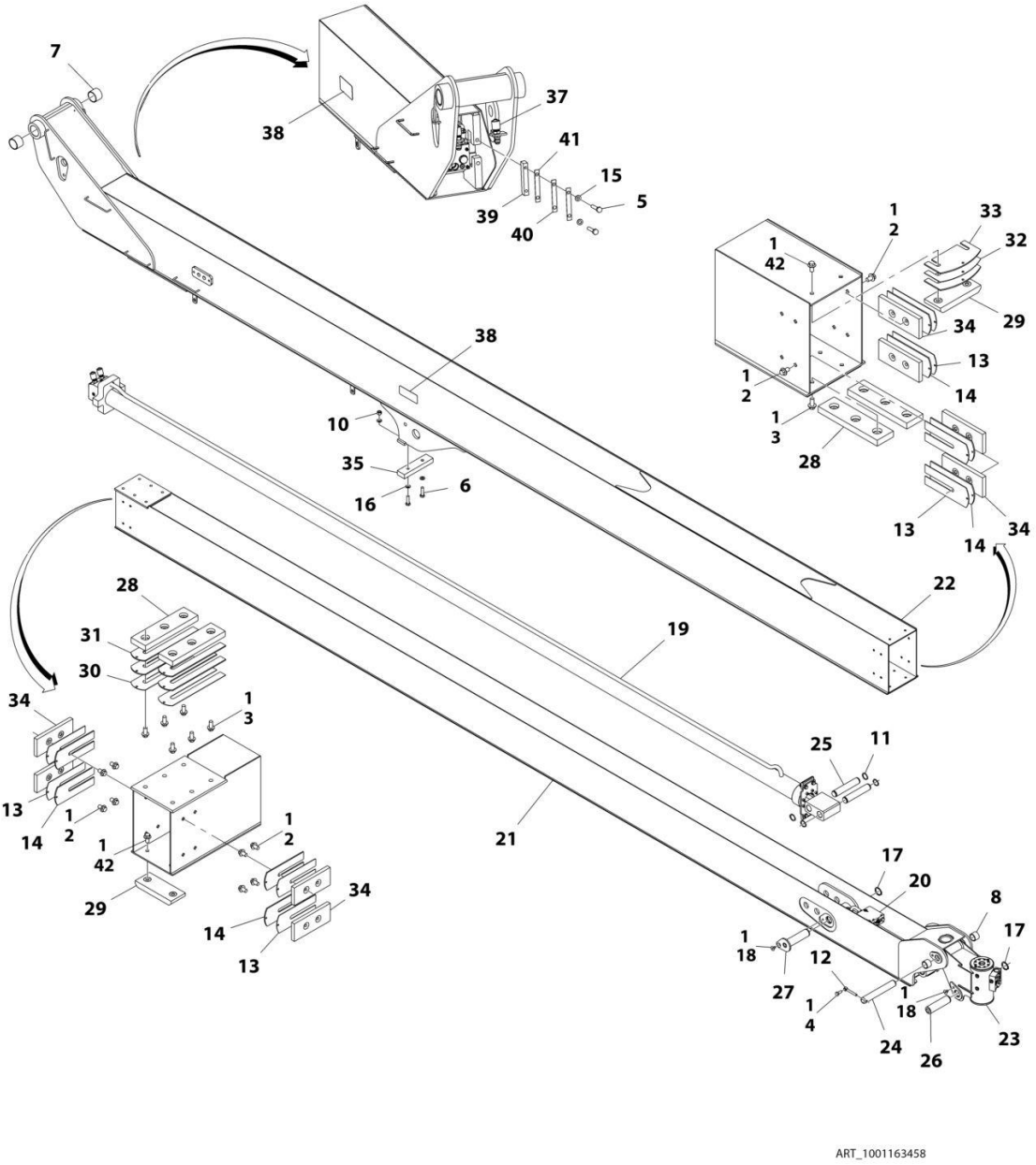

FIGURE 4-5. MAIN BOOM ASSEMBLY - 400S

ITEM	PART NUMBER	QTY	DESCRIPTION	REV
	1001163458	Ref	MAIN BOOM ASSEMBLY - 400S	I
1	0100011	AR	Compound, Locking	
2	5251008	16	Bolt M10 x 16	
3	5251011	12	Bolt M10 x 22	
4	0761012	1	Bolt M10 x 25	
5	0761019	4	Bolt M10 x 55	
6	0761217	2	Bolt M12 x 45	
7	0961950	2	Bearing	
8	0961951	2	Bushing	
10	3291205	2	Nut M12	
11	3760133	4	Ring	
12	3841143	1	Keeper, Pin	
13	4070897	AR	Shim 18 Ga	
14	4070898	AR	Shim 11 Ga	
15	4812000	4	Washer M10	
16	4812100	4	Washer M12	
17	1001099560	2	Ring, Retaining	
18	1001137032	2	Screw M10 x 16	
19	1001163383	NLA	Telescope Cylinder Assembly (See CYLINDER SECTION for Breakdown) (Use p/n 1001228075) **(SN 0300203771 through 0300255279, SN E300000100 through E300005673, SN 1300007289 through 1300007393, Except SN 0300272174 through 0300272184)**	
19	1001228075	1	Telescope Cylinder Assembly (See CYLINDER SECTION for Breakdown) **(SN E300005674 through E300007988, Excluding E300007847)**	
20	1001163386	1	Level (Platform Slave) Cylinder Assembly (See CYLINDER SECTION for Breakdown)	
21	1001163459	1	Fly, Boom	
22	1001163470	1	Base, Boom	
23	1001168278	NLA	Platform Rotator Assembly (See ROTATOR ASSEMBLY - 400S for Breakdown) (Use p/n 1001221927) **(SN 0300203771 through 0300244182, SN E300000100 through E300005673, SN 1300007289 through 1300007393)**	
23	1001221927	1	Platform Rotator Assembly (See ROTATOR ASSEMBLY - 400S for Breakdown) **(SN 0300244183 through 0300272360, SN E300005674 through E300007988, Except SN 0300272174 through 0300272184, Excluding E300007847)**	
24	1001168841	1	Pin	
25	1001168842	2	Pin	
26	1001168848	1	Pin	
27	1001168849	1	Pin	
28	1001169284	4	Pad	
29	1001169285	2	Pad	
30	1001169286	AR	Shim	
31	1001169287	AR	Shim	
32	1001169288	AR	Shim	
33	1001169289	AR	Shim	
34	1001169380	8	Pad	
35	1001171067	1	Pad	
37	1001171112	2	Hose	
38	1001171324	2	Cover	

ITEM	PART NUMBER	QTY	DESCRIPTION	REV
39	1001171667	2	Bar	
40	1001171966	AR	Shim 20Ga	
41	1001171967	AR	Shim 16Ga	
42	5251009	4	Bolt M10 x 18	

FIGURE 4-6. MAIN BOOM ASSEMBLY - 460SJ (SN 0300203771 through 0300272360, SN E300000100 through E300004333)

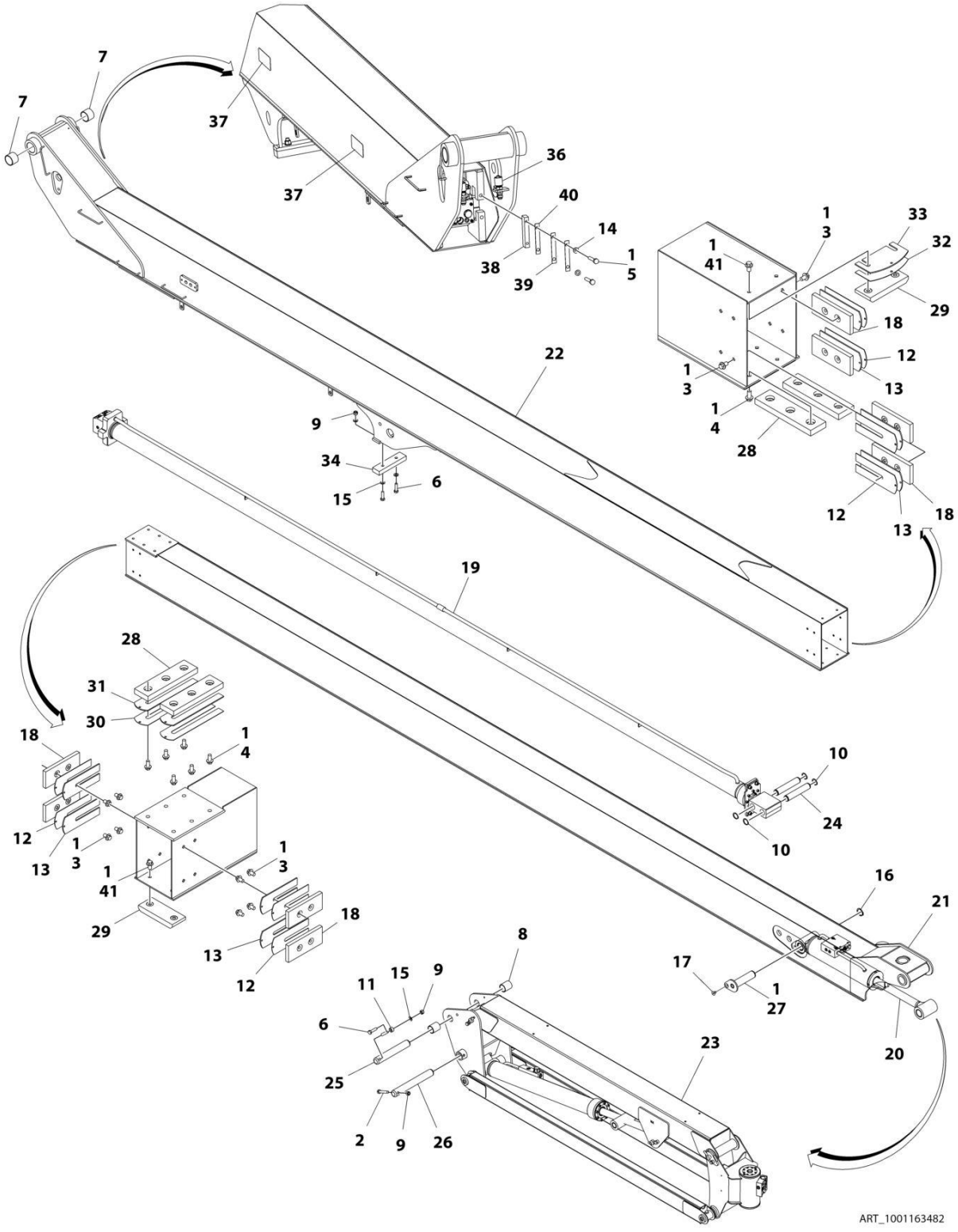

FIGURE 4-6. MAIN BOOM ASSEMBLY - 460SJ (SN 0300203771 through 0300272360, SN E300000100 through E300004333)

ITEM	PART NUMBER	QTY	DESCRIPTION	REV
	1001163482	Ref	MAIN BOOM ASSEMBLY - 460SJ	I
1	0100011	AR	Compound, Locking	
2	0701222	1	Bolt, M12 x 70	
3	5251008	16	Bolt, M10 x 16	
4	5251011	12	Bolt, M10 x 22	
5	0761019	4	Bolt, M10 x 55	
6	0761217	3	Bolt, M12 x 45	
7	0961950	2	Bearing	
8	0962348	2	Bearing	
9	3291205	4	Nut, Lock M12 x 1.75	
10	3760133	4	Ring, Retaining	
11	3841203	1	Keeper, Pin	
12	4070897	AR	Shim, 18Ga	
13	4070898	AR	Shim, 11Ga	
14	4812000	4	Washer, M10	
15	4812100	5	Washer, M12	
16	1001099560	1	Ring, Retaining	
17	1001137032	1	Screw M10 x 16	
18	1001169380	8	Pad	
19	1001163383	NLA	Telescope Cylinder Assembly (See CYLINDER SECTION for Breakdown) (Use p/n 1001251075) **(SN 0300203771 through 0300244183, SN E300000100 through E300004333)**	
19	1001228075	NLA	Telescope Cylinder Assembly (See CYLINDER SECTION for Breakdown (Use p/n 1001251075) **(SN 0300244183 through 0300255279)**	
19	1001251075	1	Telescope Cylinder Assembly (See CYLINDER SECTION for Breakdown **(SN 0300255280 through 0300272360, Except SN 0300272174 through 0300272184)**	
20	1001163386	1	Level (Platform Slave) Cylinder Assembly (See CYLINDER SECTION for Breakdown)	
21	1001163483	1	Fly, Boom	
22	1001163492	1	Base, Boom	
23	1001167605	NLA	Jib Boom Assembly (Use p/n 1001247048) (See JIB BOOM ASSEMBLY for Breakdown) **(SN 0300203771 through 0300261548, SN E300000100 through E300004333)**	
23	1001247048	1	Jib Boom Assembly (See Separate Breakdown in this Section) **(SN 0300261549 through 0300272360, Except SN 0300272174 through 0300272184)**	
24	1001168842	2	Pin	
25	1001168846	1	Pin **(SN 0300203771 through 0300213436)**	
25	3422793	1	Pin **(SN 0300213437 through 0300272360, Except SN 0300272174 through 0300272184)**	
26	1001168847	1	Pin	
27	1001168849	1	Pin	
28	1001169284	4	Pad	
29	1001169285	2	Pad	
30	1001169286	AR	Shim	
31	1001169287	AR	Shim	
32	1001169288	AR	Shim	
33	1001169289	AR	Shim	
34	1001171067	1	Pad	

ITEM	PART NUMBER	QTY	DESCRIPTION	REV
36	1001171112	2	Hose	
37	1001171324	1	Cover **(SN 0300203771 through 0300220923)**	
37	1001171324	2	Cover **(SN 0300220924 through 0300272360, Except SN 0300272174 through 0300272184)**	
38	1001171667	2	Bar	
39	1001171966	AR	Shim, 20Ga	
40	1001171967	AR	Shim, 16Ga	
41	5251009	4	Bolt, M10 x 18	

FIGURE 4-7. MAIN BOOM ASSEMBLY - 460SJ (SN E300004334 through E300007988, SN 1300007289 through 1300007393)

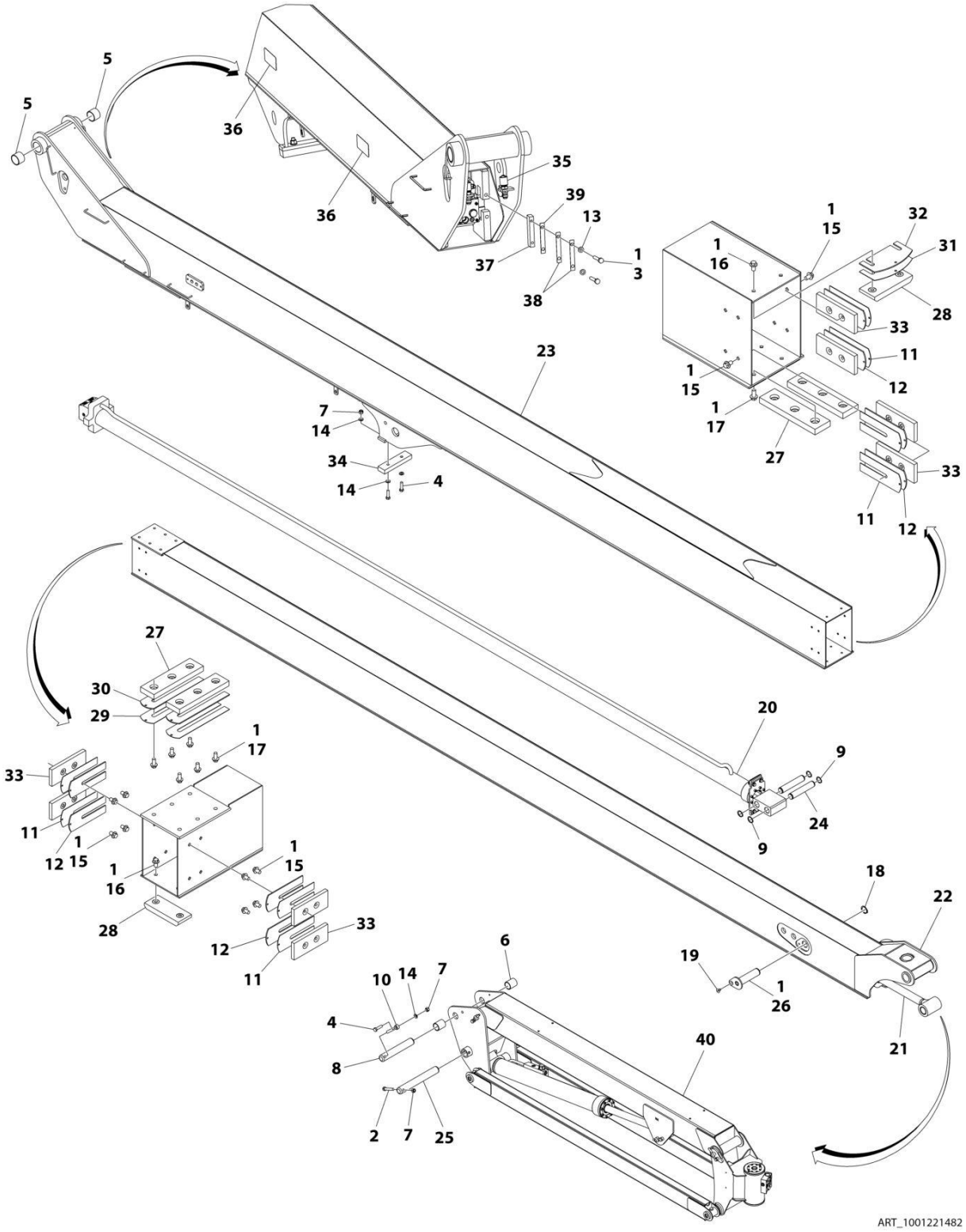

FIGURE 4-7. MAIN BOOM ASSEMBLY - 460SJ (SN E300004334 through E300007988, SN 1300007289 through 1300007393)

ITEM	PART NUMBER	QTY	DESCRIPTION	REV
	1001221482	Ref	MAIN BOOM ASSEMBLY - 460SJ	D
1	0100011	AR	Compound, Locking	
2	0701222	1	Bolt, M12 x 70	
3	0761019	4	Bolt, M10 x 55	
4	0761217	3	Bolt, M12 x 45	
5	0961950	2	Bearing	
6	0962348	2	Bearing	
7	3291205	4	Nut, Lock M12 x 1.75	
8	3422793	1	Pin	
9	3760133	4	Ring, Retaining	
10	3841203	1	Keeper, Pin	
11	4070897	AR	Shim, 18Ga	
12	4070898	AR	Shim, 11Ga	
13	4812000	4	Washer, M10	
14	4812100	5	Washer, M12	
15	5251008	16	Bolt, M10 x 16	
16	5251009	4	Bolt, M10 x 18	
17	5251011	12	Bolt, M10 x 22	
18	1001099560	1	Ring, Retaining	
19	1001137032	1	Screw M10 x 16	
20	1001163383	NLA	Telescope Cylinder Assembly (See CYLINDER SECTION for Breakdown) (Use p/n 1001228075) **(SN 1300007289 through 1300007393, SN E300004334 through E300005673)**	
20	1001228075	1	Telescope Cylinder Assembly (See CYLINDER SECTION for Breakdown) **(SN E300005674 through E300007988, Excluding E300007847)**	
21	1001163386	1	Level (Platform Slave) Cylinder Assembly (See CYLINDER SECTION for Breakdown)	
22	1001163483	1	Fly, Boom	
23	1001163492	1	Base, Boom	
24	1001168842	2	Pin	
25	1001168847	1	Pin	
26	1001168849	1	Pin	
27	1001169284	4	Pad	
28	1001169285	2	Pad	
29	1001169286	AR	Shim	
30	1001169287	AR	Shim	
31	1001169288	AR	Shim	
32	1001169289	AR	Shim	
33	1001169380	8	Pad	
34	1001171067	1	Pad	
35	1001171112	2	Hose	
36	1001171324	AR	Cover	
37	1001171667	2	Bar	
38	1001171966	AR	Shim, 20Ga	
39	1001171967	AR	Shim, 16Ga	
40	1001221483	NLA	Jib Boom Assembly (Use p/n 1001247623) (See Separate Breakdown in this Section) **(SN 1300007289 through 1300007393, SN E300004334 through E300007170)**	
40	1001247623	1	Jib Boom Assembly (See Separate Breakdown in this Section) **(SN**	

ITEM	PART NUMBER	QTY	DESCRIPTION	REV
			E300007171 through E300007988, Excluding E300007847)	

FIGURE 4-8. MAIN BOOM ASSEMBLY - 400S (SN 0300255280 through 0300272360)

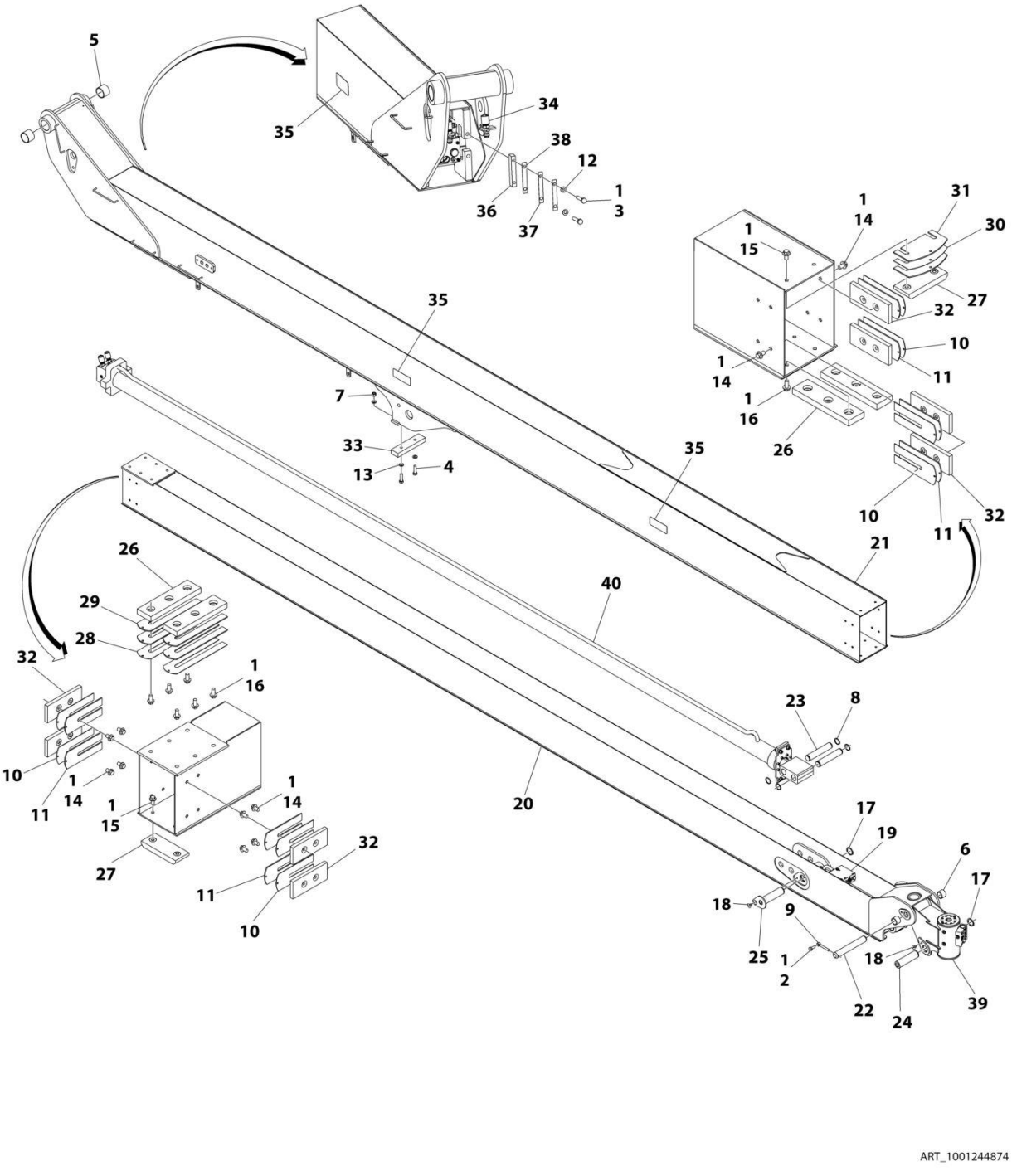

FIGURE 4-8. MAIN BOOM ASSEMBLY - 400S (SN 0300255280 through 0300272360)

ITEM	PART NUMBER	QTY	DESCRIPTION	REV
	1001244874	Ref	MAIN BOOM ASSEMBLY	B
1	0100011	AR	Compound, Locking	
2	0761012	1	Bolt M10 x 25	
3	0761019	4	Bolt M10 x 55	
4	0761217	2	Bolt M12 x 45	
5	0961950	2	Bearing	
6	0961951	2	Bushing	
7	3291205	2	Nut M12	
8	3760133	4	Ring	
9	3841143	1	Keeper, Pin	
10	4070897	AR	Shim 18 Ga	
11	4070898	AR	Shim 11 Ga	
12	4812000	4	Washer M10	
13	4812100	4	Washer M12	
14	5251008	16	Bolt M10 x 16	
15	5251009	4	Bolt M10 x 18	
16	5251011	12	Bolt M10 x 22	
17	1001099560	2	Ring, Retaining	
18	1001137032	2	Screw M10 x 16	
19	1001163386	1	Level (Platform Slave) Cylinder Assembly (See Separate Breakdown in CYLINDER SECTION)	
20	1001163459	1	Fly, Boom	
21	1001163470	1	Base, Boom	
22	1001168841	1	Pin	
23	1001168842	2	Pin	
24	1001168848	1	Pin	
25	1001168849	1	Pin	
26	1001169284	4	Pad	
27	1001169285	2	Pad	
28	1001169286	AR	Shim	
29	1001169287	AR	Shim	
30	1001169288	AR	Shim	
31	1001169289	AR	Shim	
32	1001169380	8	Pad	
33	1001171067	1	Pad	
34	1001171112	2	Hose	
35	1001171324	6	Cover	
36	1001171667	2	Bar	
37	1001171966	AR	Shim 20Ga	
38	1001171967	AR	Shim 16Ga	
39	1001221927	1	Platform Rotator Assembly (See Separate Breakdown in this Section)	
40	1001251075	1	Telescope Cylinder Assembly (See Separate Breakdown in CYLINDER SECTION)	

FIGURE 4-9. JIB BOOM ASSEMBLY (SN 0300203771 through 0300261548, SN E300000100 through E300004333)

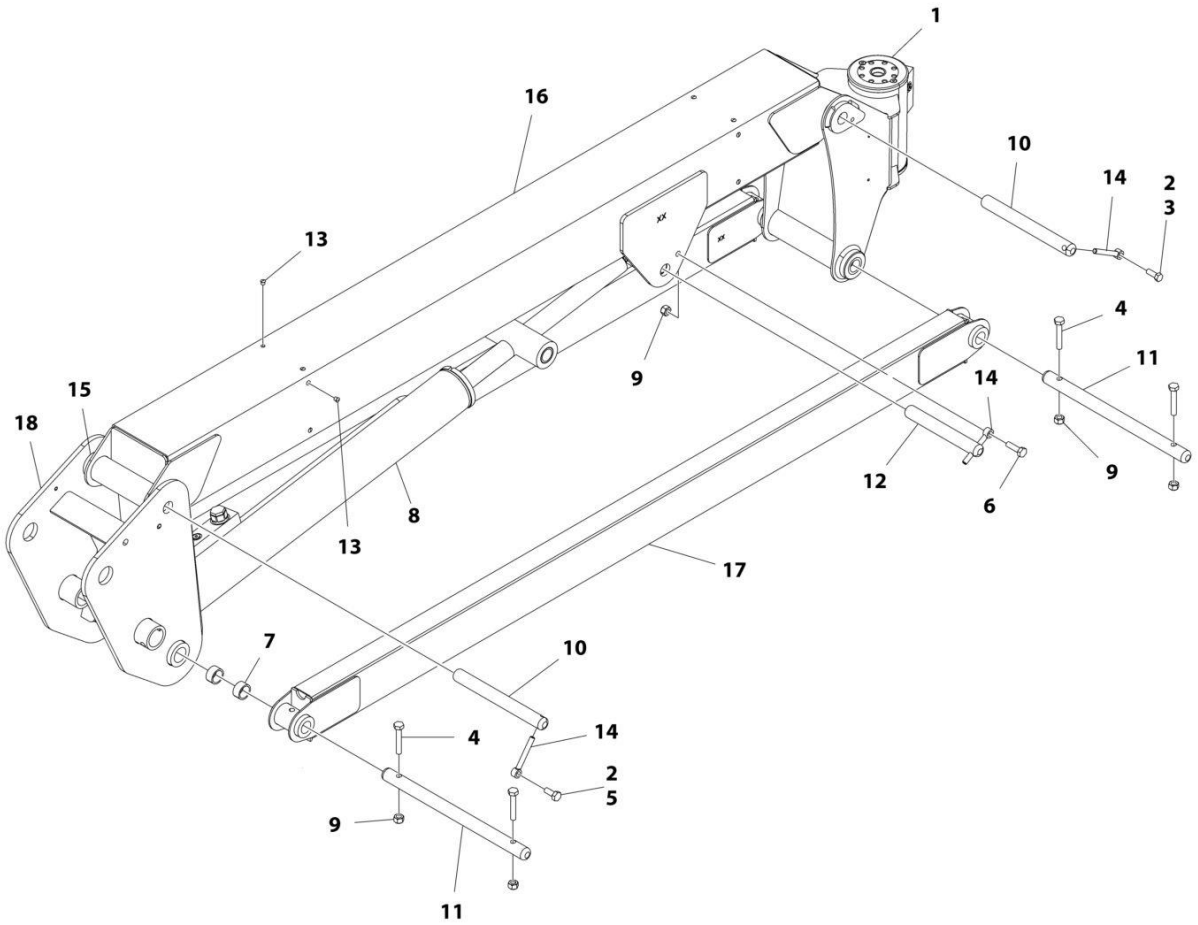

FIGURE 4-9. JIB BOOM ASSEMBLY (SN 0300203771 through 0300261548, SN E300000100 through E300004333)

ITEM	PART NUMBER	QTY	DESCRIPTION	REV
	1001167605	Ref	JIB BOOM ASSEMBLY	I
1	1001181051	1	Rotator Assembly (See ROTATOR ASSEMBLY - 460SJ for Breakdown)	
2	0100011	AR	Compound, Locking	
3	0641608	1	Bolt, 3/8 x 1	
4	0701020	4	Bolt, M10 x 60	
5	0761012	1	Bolt, M10 x 25	
6	0761015	1	Bolt, M10 x 35	
7	0961947	4	Bearing	
8	1683609	NLA	Lift Cylinder Assembly - Jib (Use p/n 1001248012) (See CYLINDER SECTION for Breakdown) **(SN 0300203771 through 0300244835, SN E300000100 through E300004333)**	
8	1001228012	NLA	Lift Cylinder Assembly - Jib (Use p/n 1001248012) (See CYLINDER SECTION for Breakdown) **(SN 0300244836 through 0300244838, SN E300000100 through E300004333)**	
8	1001248012	1	Lift Cylinder Assembly - Jib (See CYLINDER SECTION for Breakdown) **(SN 0300244839 through 0300261548)**	
9	3291005	5	Nut M10	
10	3422860	2	Pin	
11	3422861	2	Pin	
12	3422867	1	Pin	
13	3520034	8	Plug **(SN 0300203771 through 0300229918, SN E300000100 through E300004333)**	
13	1001223899	8	Fastener **(SN 0300229919 through 0300261548, SN E300000100 through E300004333)**	
14	3841143	3	Keeper, Pin	
15	4740439	2	Washer, Thrust	
16	4844816	1	Tube (Upper)	
16	0962335	4	Bushing	
17	4844817	2	Tube, Lower	
18	1001165567	1	Pivot	

FIGURE 4-10. JIB BOOM ASSEMBLY (SN 0300261549 through 0300272360)

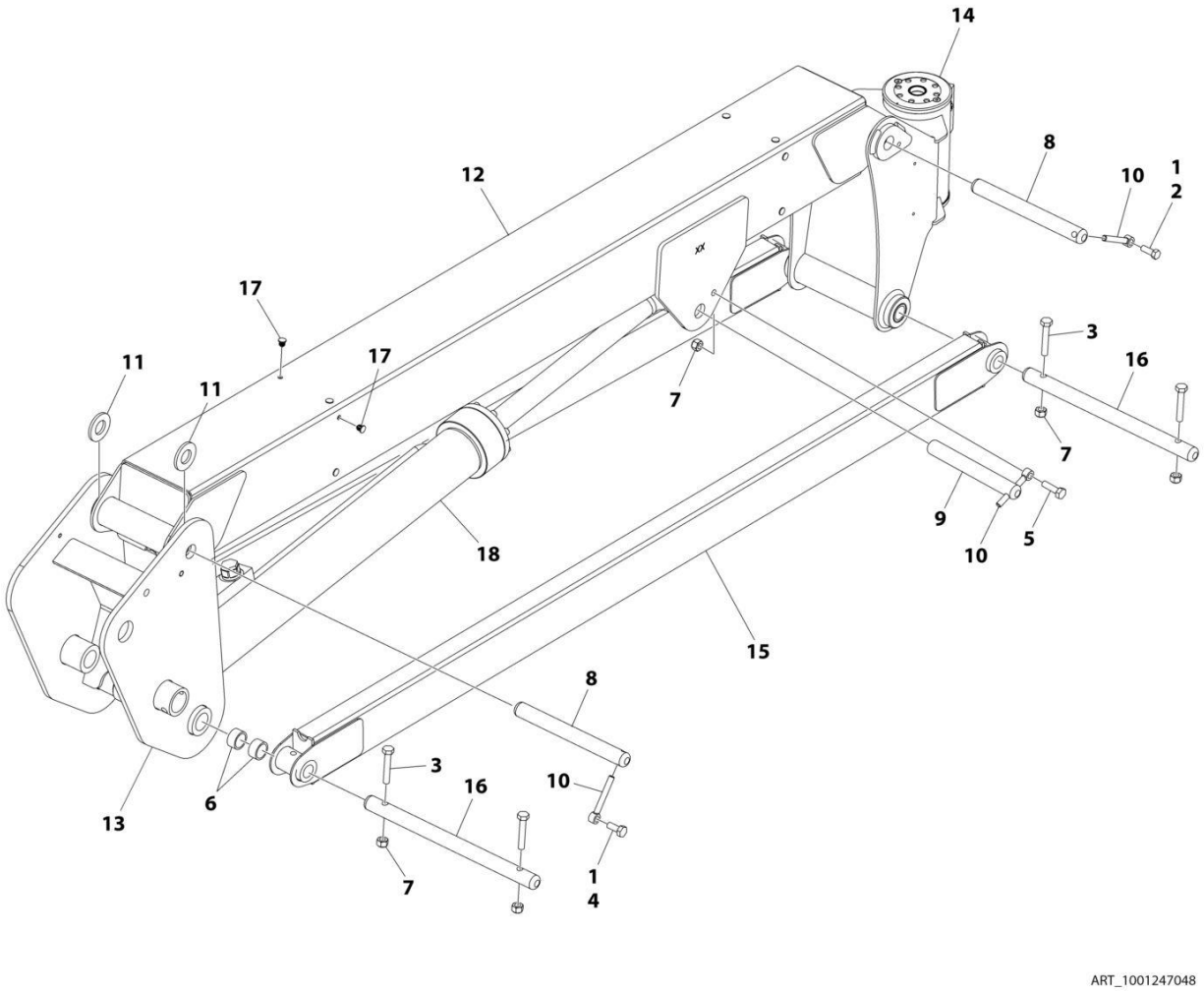

FIGURE 4-10. JIB BOOM ASSEMBLY (SN 0300261549 through 0300272360)

ITEM	PART NUMBER	QTY	DESCRIPTION	REV
	1001247048	Ref	JIB BOOM ASSEMBLY	B
1	0100011	AR	Compound, Locking	
2	0641608	1	Bolt 3/8 x 1	
3	0701020	4	Bolt M10 x 60	
4	0761012	1	Bolt M10 x 25	
5	0761015	1	Bolt M10 x 35	
6	0961947	4	Bearing	
7	3291005	5	Nut M10	
8	3422860	2	Pin	
9	3422867	1	Pin	
10	3841143	3	Keeper, Pin	
11	4740439	2	Washer, Thrust	
12	4844816	1	Tube (Upper)	
12	0962335	4	Bushing	
13	1001165567	1	Pivot	
14	1001181051	1	Rotator Assembly (See Separate Breakdown in this Section)	
15	4844817	2	Tube, Lower	
16	3422861	2	Pin	
17	1001223899	8	Fastener	
18	1001248012	1	Lift Cylinder Assembly - Jib (See Separate Breakdown in CYLINDER SECTION)	

FIGURE 4-11. JIB BOOM ASSEMBLY - 460SJ (SN E300004334 through E300007170, SN 1300007289 through 1300007393)

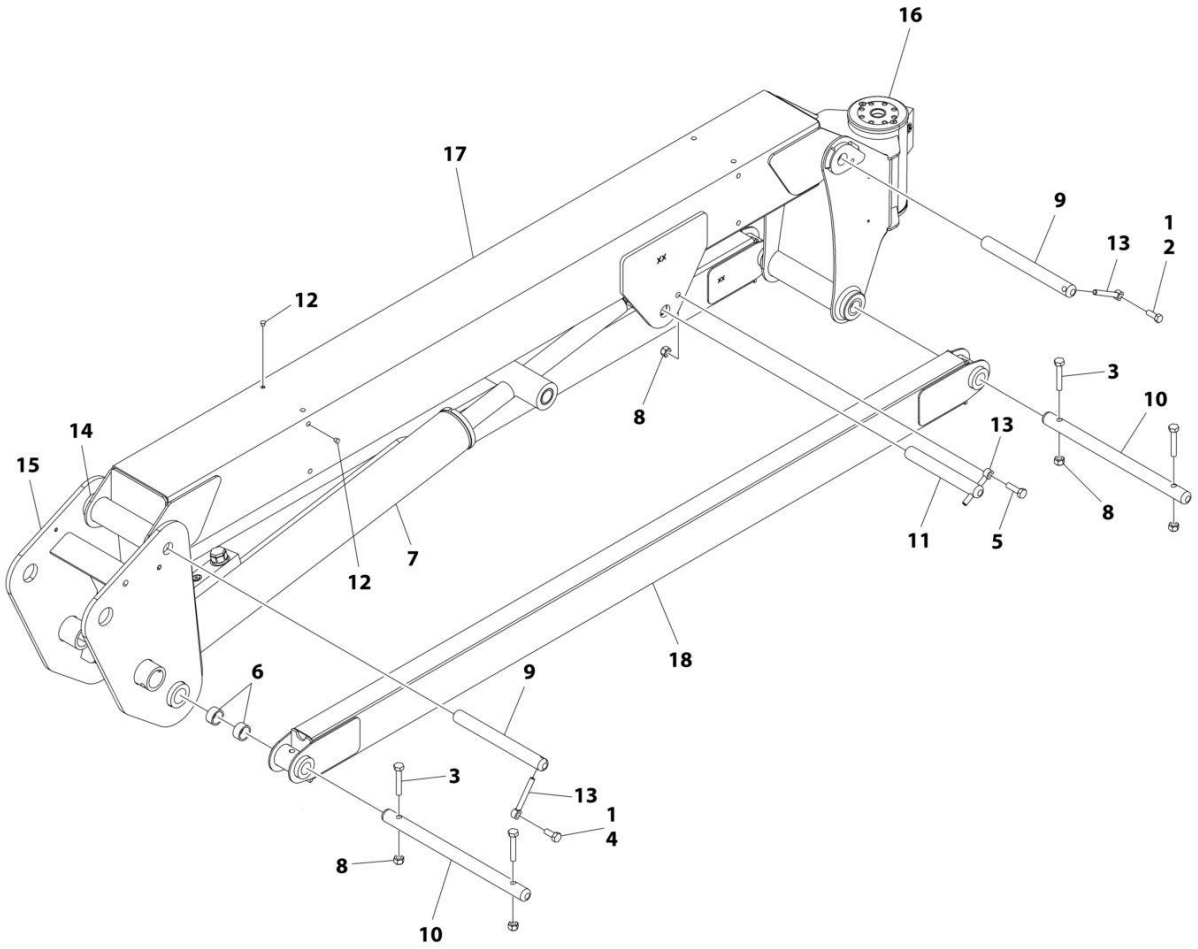

FIGURE 4-11. JIB BOOM ASSEMBLY - 460SJ (SN E300004334 through E300007170, SN 1300007289 through 1300007393)

ITEM	PART NUMBER	QTY	DESCRIPTION	REV
	1001221483	Ref	JIB BOOM ASSEMBLY - 460SJ	E
1	0100011	AR	Compound, Locking	
2	0641608	1	Bolt, 3/8 x 1	
3	0701020	4	Bolt, M10 x 60	
4	0761012	1	Bolt, M10 x 25	
5	0761015	1	Bolt, M10 x 35	
6	0961947	4	Bearing	
7	1683609	NLA	Lift Cylinder Assembly - Jib (See CYLINDER SECTION for Breakdown) (Use p/n 1001228012) **(SN 1300007289 through 1300007393, SN E30004334 through E300005748)**	
7	1001228012	NLA	Lift Cylinder Assembly - Jib (See CYLINDER SECTION for Breakdown) **(SN E300004334 through E300006009)**	
7	1001248012	1	Lift Cylinder Assembly - Jib (See CYLINDER SECTION for Breakdown) **(SN E300006010 through E300007170)**	
8	3291005	5	Nut M10	
9	3422860	2	Pin	
10	3422861	2	Pin	
11	3422867	1	Pin	
12	3520034	8	Plug	
13	3841143	3	Keeper, Pin	
14	4740439	2	Washer, Thrust	
15	1001165567	1	Pivot	
16	1001181051	1	Rotator Assembly (See ROTATOR ASSEMBLY - 460SJ for Breakdown)	
17	1001221484	1	Tube (Upper)	
17	0962335	4	Bushing	
18	1001221486	2	Tube, Lower	

FIGURE 4-12. JIB BOOM ASSEMBLY - 460SJ (SN E300007171 through E300007988)

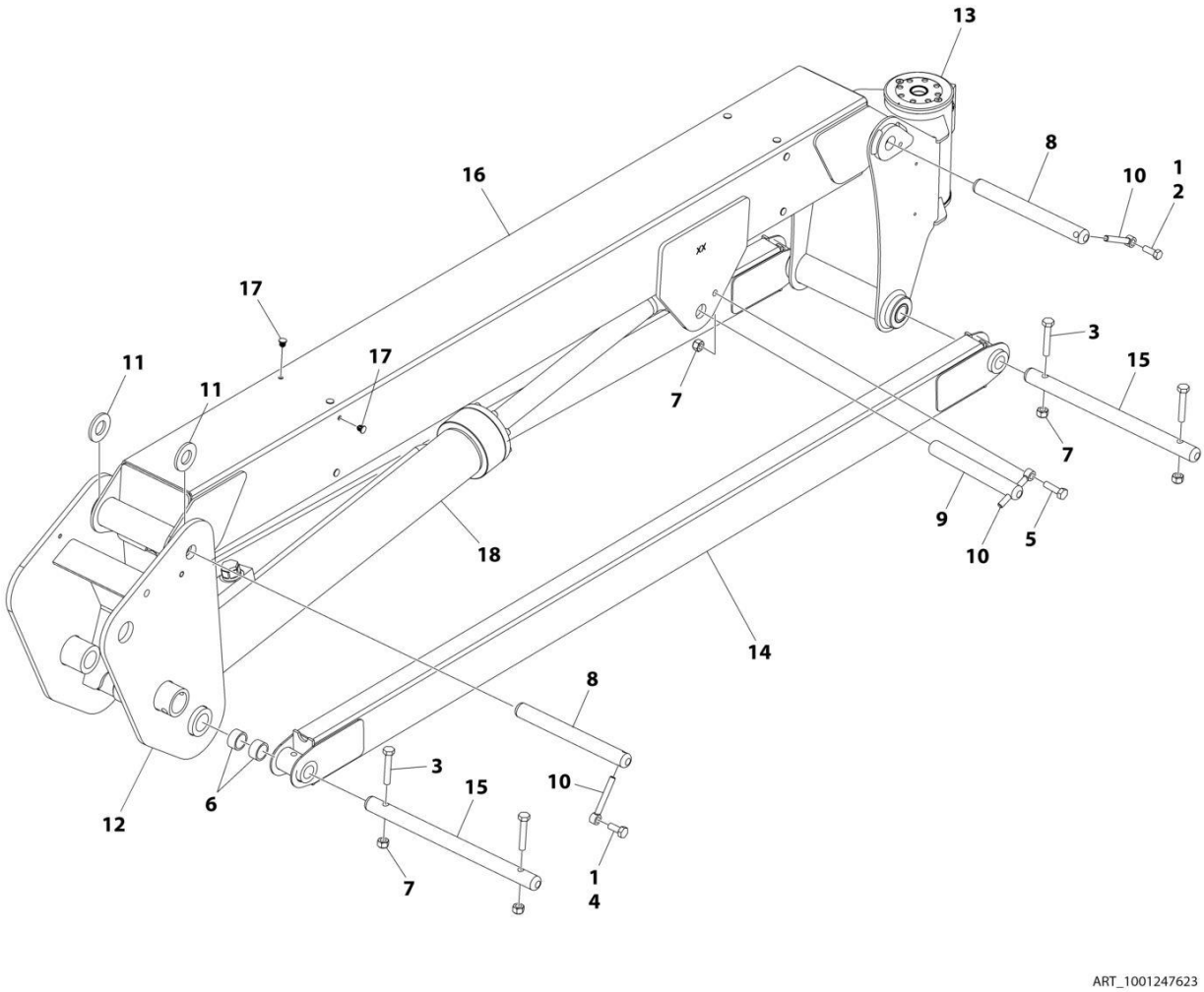

FIGURE 4-12. JIB BOOM ASSEMBLY - 460SJ (SN E300007171 through E300007988)

ITEM	PART NUMBER	QTY	DESCRIPTION	REV
	1001247623	Ref	JIB BOOM ASSEMBLY	B
1	0100011	AR	Compound, Locking	
2	0641608	1	Bolt 3/8 x 1	
3	0701020	4	Bolt M10 x 60	
4	0761012	1	Bolt M10 x 25	
5	0761015	1	Bolt M10 x 35	
6	0961947	4	Bearing	
7	3291005	5	Nut M10	
8	3422860	2	Pin	
9	3422867	1	Pin	
10	3841143	3	Keeper, Pin	
11	4740439	2	Washer, Thrust	
12	1001165567	1	Pivot	
13	1001181051	1	Rotator Assembly (See Separate Breakdown in this Section)	
14	1001221486	2	Tube, Lower	
15	3422861	2	Pin	
16	1001221484	1	Tube (Upper)	
16	0962335	4	Bushing	
17	1001223899	8	Fastener	
18	1001248012	1	Lift Cylinder Assembly - Jib (See Separate Breakdown in CYLINDER SECTION)	

FIGURE 4-13. ROTATOR ASSEMBLY - 400S (SN 0300203771 through 03002444182, SN E300000100 through E300005673, SN 1300007289 through 1300007393)

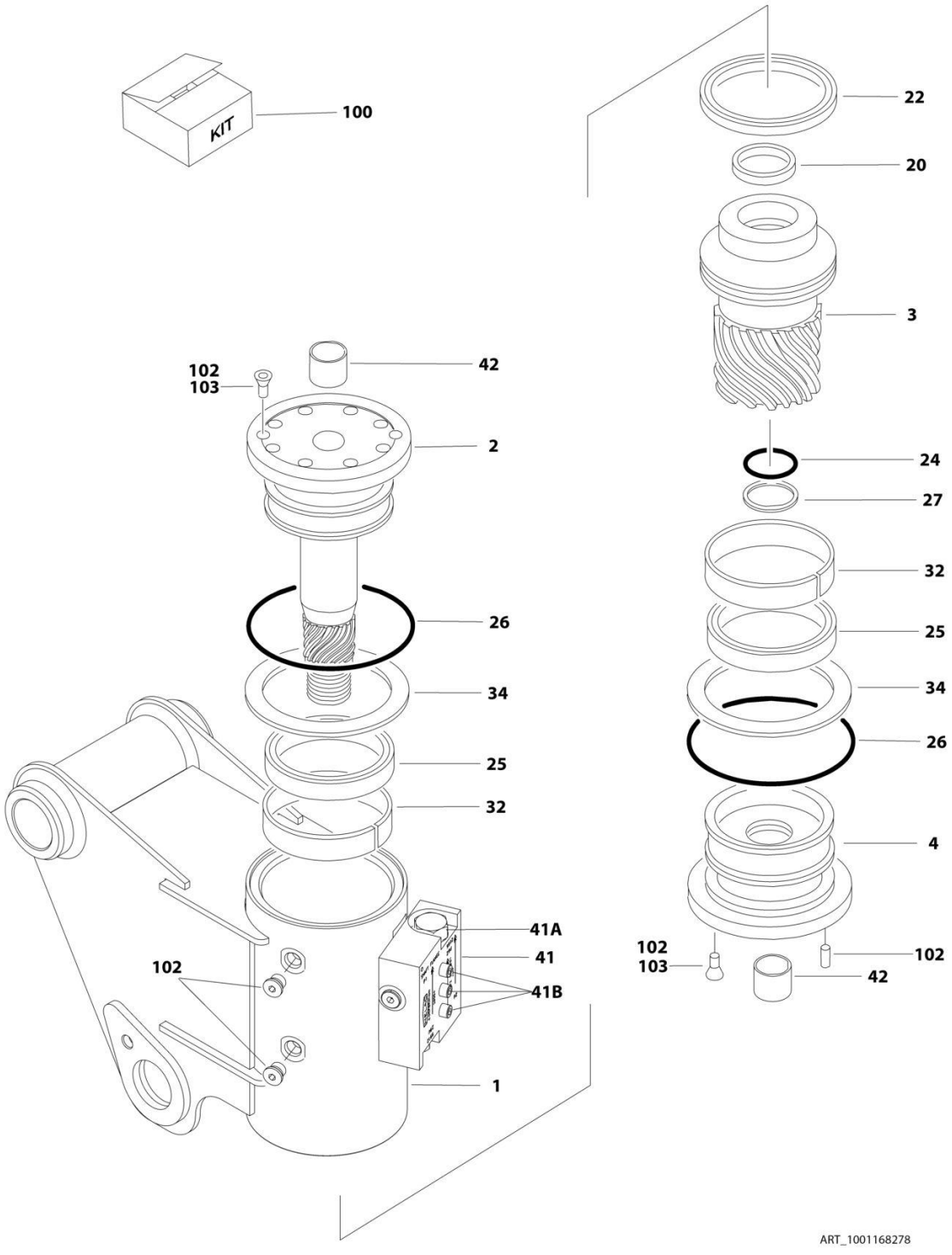

FIGURE 4-13. ROTATOR ASSEMBLY - 400S (SN 0300203771 through 03002444182, SN E300000100 through E300005673, SN 1300007289 through 1300007393)

ITEM	PART NUMBER	QTY	DESCRIPTION	REV
	1001168278	Ref	ROTATOR ASSEMBLY - 400S	D
1	See Note	NSS	Housing/Ring Gear Assembly (Note: Not Available - Purchase Complete Rotator Assembly)	
2	7017162	1	Shaft Weldment	
3	7017163	1	Piston/Sleeve Assembly	
4	7017164	1	Cap, End	
20	See Note	NSS	T-Seal (Note: Use Item 100)	
22	See Note	NSS	T-Seal (Note: Use Item 100)	
24	See Note	NSS	O-Ring (Note: Use Item 100)	
25	See Note	NSS	Seal (Note: Use Item 100)	
26	See Note	NSS	O-Ring (Note: Use Item 100)	
27	See Note	NSS	Ring, Back-up (Note: Use Item 100)	
32	See Note	NSS	Ring, Wear (Note: Use Item 101)	
34	See Note	NSS	Washer, Thrust (Note: Use Item 101)	
41	7017172	AR	Valve Assembly	
41A	7017192	2	Cartridge, Valve	
41A	See Note	NSS	Seal Kit - 7017192 Valve (Note: Not Available for Purchase)	
41B	See Note	3	Bolt 1/4-20NC x 1-1/2 (Grade 8) (Note: Not Available - Purchase Locally)	
42	7017195	2	Bushing	
100	70000342	1	Seal Kit (Includes Items 20, 22, 24, 25, 27 & 33)	
101	7017159	1	Bearing Kit (Includes Items 32 & 34)	
102	7017142	1	Hardware Kit	
103	70001697	4	Screw, Countersunk 1/4 x 3/8 Grade 8	

FIGURE 4-14. ROTATOR ASSEMBLY - 400S (SN 0300244183 through 0300272360, SN E300005674 through E300007988)

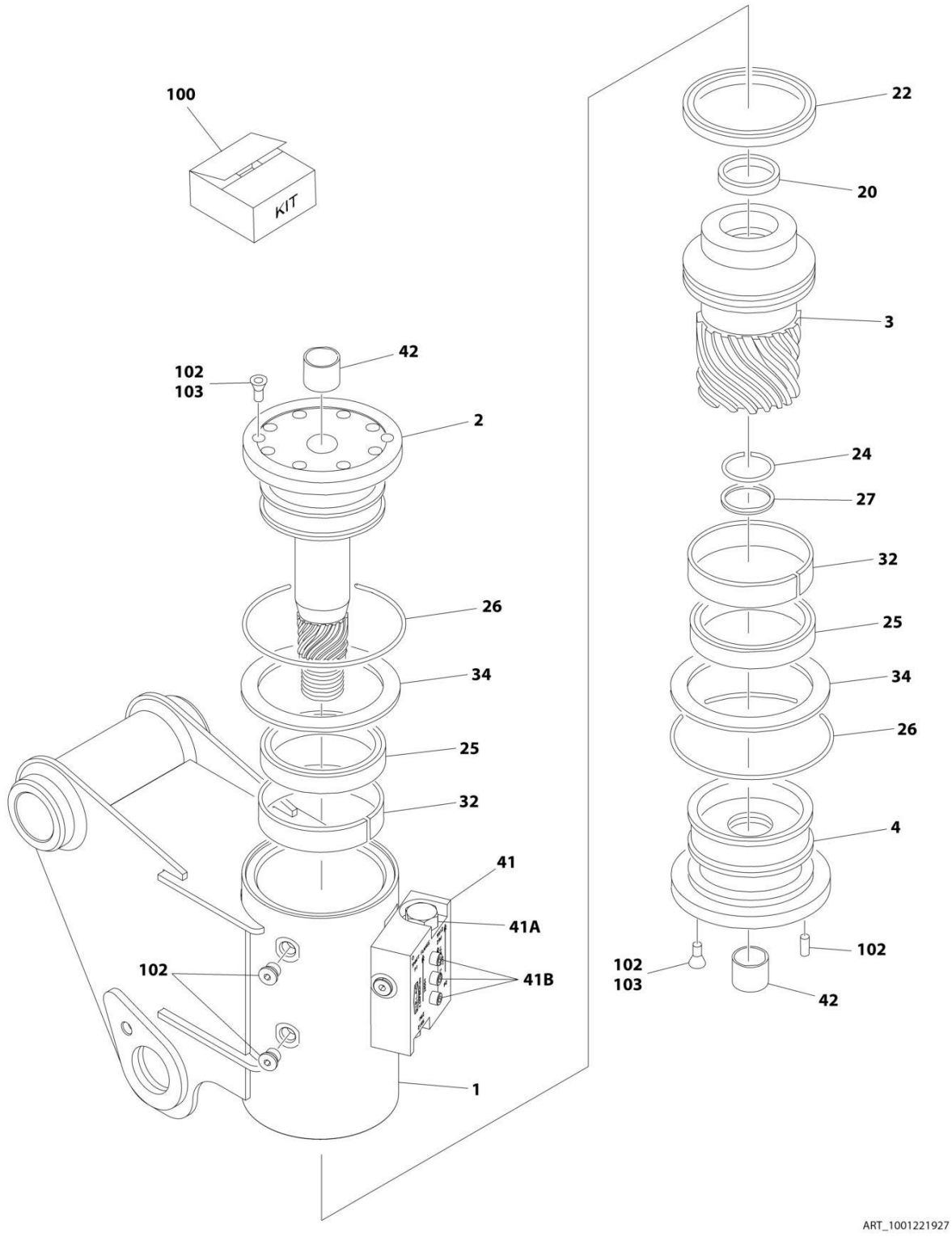

FIGURE 4-14. ROTATOR ASSEMBLY - 400S (SN 0300244183 through 0300272360, SN E300005674 through E300007988)

ITEM	PART NUMBER	QTY	DESCRIPTION	REV
	1001221927	Ref	ROTATOR ASSEMBLY - 400S	A
1	See Note	NSS	Housing/Ring Gear Assembly (Note: Not Available - Purchase Complete Rotator Assembly)	
2	7017162	1	Shaft Weldment	
3	7017163	1	Piston/Sleeve Assembly	
4	7017164	1	Cap, End	
20	See Note	NSS	T-Seal (Note: Use Item 100)	
22	See Note	NSS	T-Seal (Note: Use Item 100)	
24	See Note	NSS	O-Ring (Note: Use Item 100)	
25	See Note	NSS	Seal (Note: Use Item 100)	
26	See Note	NSS	O-Ring (Note: Use Item 100)	
27	See Note	NSS	Ring, Back-up (Note: Use Item 100)	
32	See Note	NSS	Ring, Wear (Note: Use Item 101)	
34	See Note	NSS	Washer, Thrust (Note: Use Item 101)	
40	70006580	1	Tube, Stop (Not Shown)	
41	7017172	AR	Valve Assembly	
41A	7017192	2	Cartridge, Valve	
41A	See Note	NSS	Seal Kit - 7017192 Valve (Note: Not Available for Purchase)	
41B	See Note	3	Bolt 1/4 x 1-1/2 (Grade 8) (Note: Not Available - Purchase Locally)	
42	7017195	2	Bushing	
100	70000342	1	Seal Kit (Includes Items 20, 22, 24, 25, 27)	
101	7017159	1	Bearing Kit (Includes Items 32 & 34)	
102	7017142	1	Hardware Kit	
103	70001697	4	Screw, Countersunk 1/4 x 3/8 Grade 8	

FIGURE 4-15. ROTATOR ASSEMBLY - 460SJ

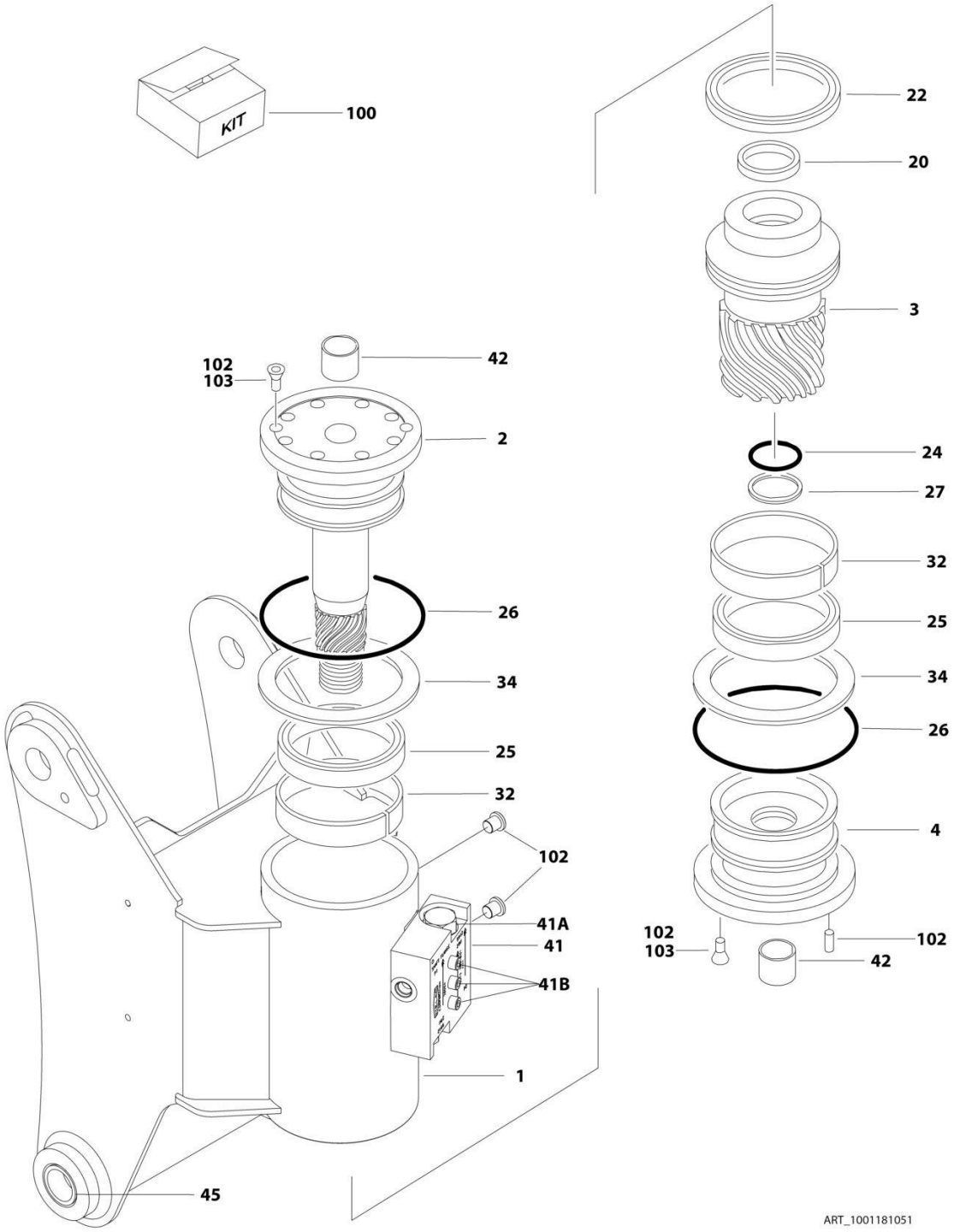

FIGURE 4-15. ROTATOR ASSEMBLY - 460SJ

ITEM	PART NUMBER	QTY	DESCRIPTION	REV
	1001181051	Ref	ROTATOR ASSEMBLY - 460SJ	A
1	See Note	NSS	Housing/Ring Gear Assembly (Note: Not Available - Purchase Complete Rotator Assembly)	
2	7017162	1	Shaft Weldment	
3	7017163	1	Piston/Sleeve Assembly	
4	7017164	1	Cap, End	
20	See Note	NSS	T-Seal (Note: Use Item 100)	
22	See Note	NSS	T-Seal (Note: Use Item 100)	
24	See Note	NSS	O-Ring (Note: Use Item 100)	
25	See Note	NSS	Seal (Note: Use Item 100)	
26	See Note	NSS	O-Ring (Note: Use Item 100)	
27	See Note	NSS	Ring, Back-up (Note: Use Item 100)	
32	See Note	NSS	Ring, Wear (Note: Use Item 101)	
34	See Note	NSS	Washer, Thrust (Note: Use Item 101)	
41	7017172	AR	Valve Assembly	
41A	7017192	2	Cartridge, Valve	
41A	See Note	NSS	Seal Kit - 7017192 Valve (Note: Not Available for Purchase)	
41B	See Note	3	Bolt 1/4-20NC x 1-1/2 Grade 8 (Note: Not Available - Purchase Locally)	
42	7017195	2	Bushing	
45	7017150	2	Bushing	
100	70000342	1	Seal Kit (Includes Items 20, 22, 24, 25, 27 & 33)	
101	7017159	1	Bearing Kit (Includes Items 32 & 34)	
102	7017142	1	Hardware Kit	
103	70001697	4	Screw, Countersunk 1/4 x 3/8 Grade 8	

FIGURE 4-16. POWER TRACK INSTALLATION (SN 0300203771 through 0300272360, SN E300000100 through E300003862)

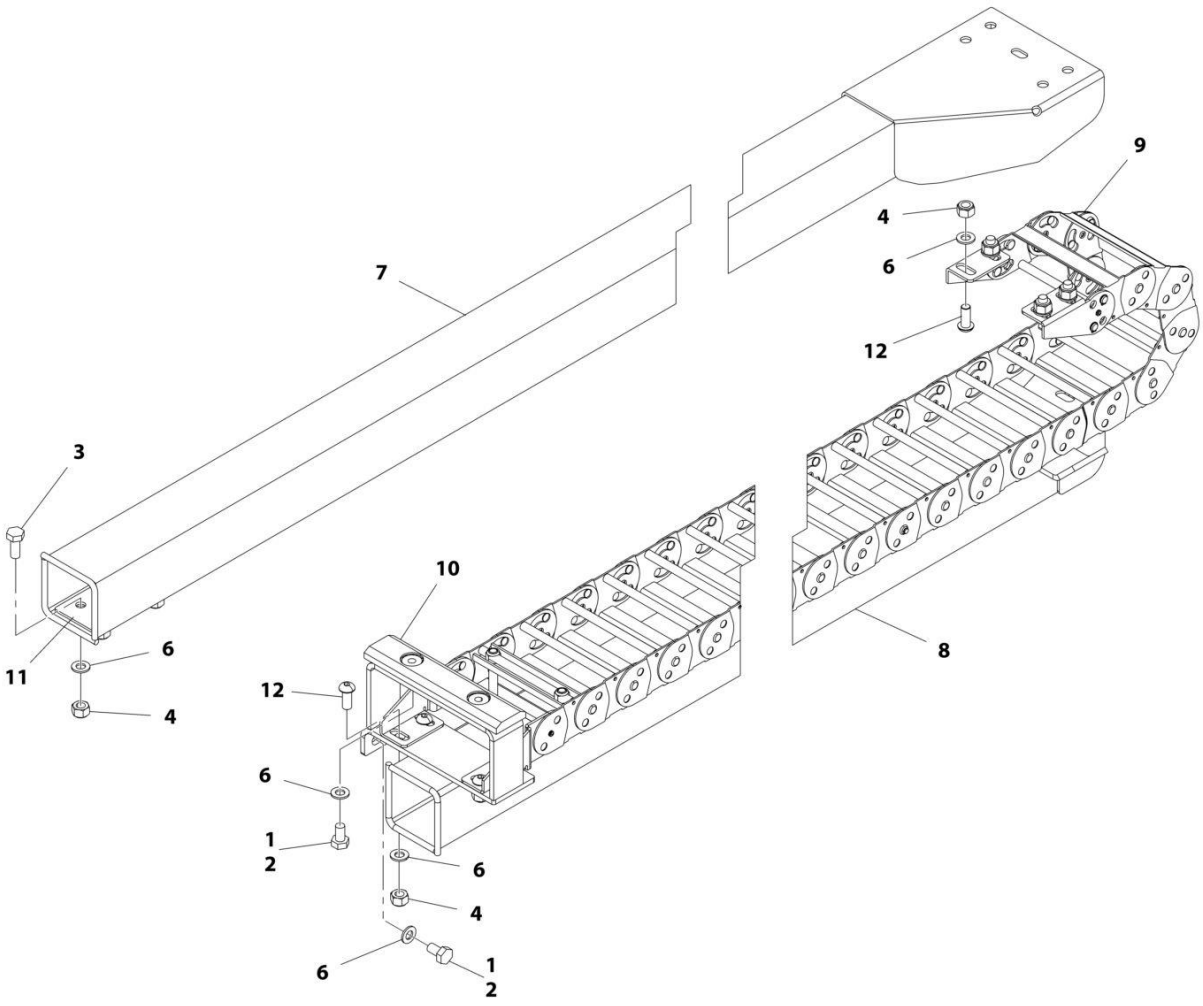

FIGURE 4-16. POWER TRACK INSTALLATION (SN 0300203771 through 0300272360, SN E300000100 through E300003862)

ITEM	PART NUMBER	QTY	DESCRIPTION	REV
	1001165538	Ref	POWER TRACK INSTALLATION	D
1	0100011	AR	Compound, Locking	
2	0761009	10	Bolt, M10 x 18	
3	0761012	4	Bolt, M10 x 25	
4	3291005	12	Nut M10	
6	4812000	22	Washer, M10	
7	1001165531	1	Tube, Push	
8	1001165534	1	Tube, Carrier	
9	1001165537	1	Power Track **(SN 0300203771 through 0300229632, SN E300000100 through E300003862, SN 1300007289 through 1300007393)**	
9	1001224888	1	Power Track **(SN 0300229633 through 0300272360, SN E30004417 through E30004333, Except SN 0300272174 through 0300272184)**	
9	70002011	1	Repair Section without Clamp - 10 Links (1001165537 Power Track) **(SN 0300203771 through 0300229632, SN E300000100 through E300003862, SN 1300007289 through 1300007393)**	
9	70005106	1	Repair Section with Clamp - 10 Links (1001165537 Power Track) **(SN 0300203771 through 0300229632, SN E300000100 through E300003862, SN 1300007289 through 1300007393)**	
9	70006255	1	Repair Section (1001224888 Power Track) **(SN 0300229633 through 0300272360, SN E30004417 through E30004333, Except SN 0300272174 through 0300272184)**	
9	70005107	1	Feet, Mounting (Includes 1 each Left and Right Mounting Feet)(1001165537 Power Track) **(SN 0300203771 through 0300229632, SN E300000100 through E300003862, SN 1300007289 through 1300007393)**	
9	70006270	1	Feet, Mounting (Includes 2 each Left and Right Mounting Feet)(1001224888 Power Track) **(SN 0300229633 through 0300272360, SN E30004417 through E30004333, Except SN 0300272174 through 0300272184)**	
10	1001169611	1	Pad, Wear	
11	1001176899	1	Plate, Support	
12	1001173763	8	Screw, M10 x 25	

FIGURE 4-17. POWER TRACK INSTALLATION (SN E300003862 through E300007988, SN 1300007289 through 1300007393)

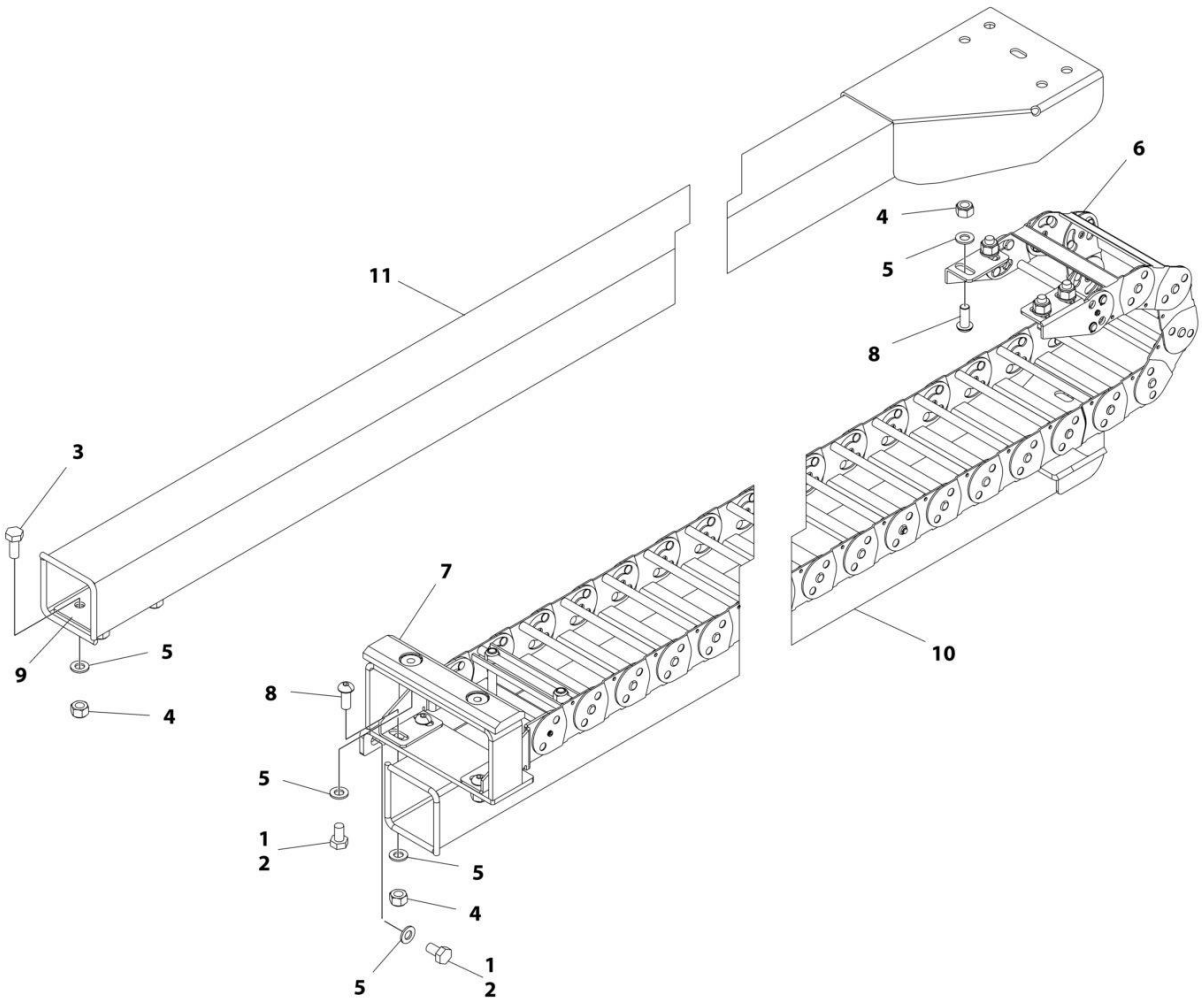

FIGURE 4-17. POWER TRACK INSTALLATION (SN E300003862 through E300007988, SN 1300007289 through 1300007393)

ITEM	PART NUMBER	QTY	DESCRIPTION	REV
	1001220920	Ref	POWER TRACK INSTALLATION	B
1	0100011	AR	Compound, Locking	
2	0761009	10	Bolt, M10 x 18	
3	0761012	4	Bolt, M10 x 25	
4	3291005	12	Nut M10	
5	4812000	22	Washer, M10	
6	1001165537	1	Power Track **(SN E300003862 through E300004500)**	
6	1001224888	1	Power Track **(SN E300004501 through E300007988, SN 1300007289 through 1300007393, Excluding E300007847)**	
6	70002011	1	Repair Section without Clamp - 10 Links	
6	70005106	1	Repair Section with Clamp - 10 Links	
6	70005107	1	Feet, Mounting (Includes 1 each Left and Right Mounting Feet)	
7	1001169611	1	Pad, Wear	
8	1001173763	8	Screw, M10 x 25	
9	1001176899	1	Plate, Support	
10	1001220921	1	Tube, Carrier	
11	1001220924	1	Tube, Push	

FIGURE 4-18. CAPACITY SWITCH INSTALLATION

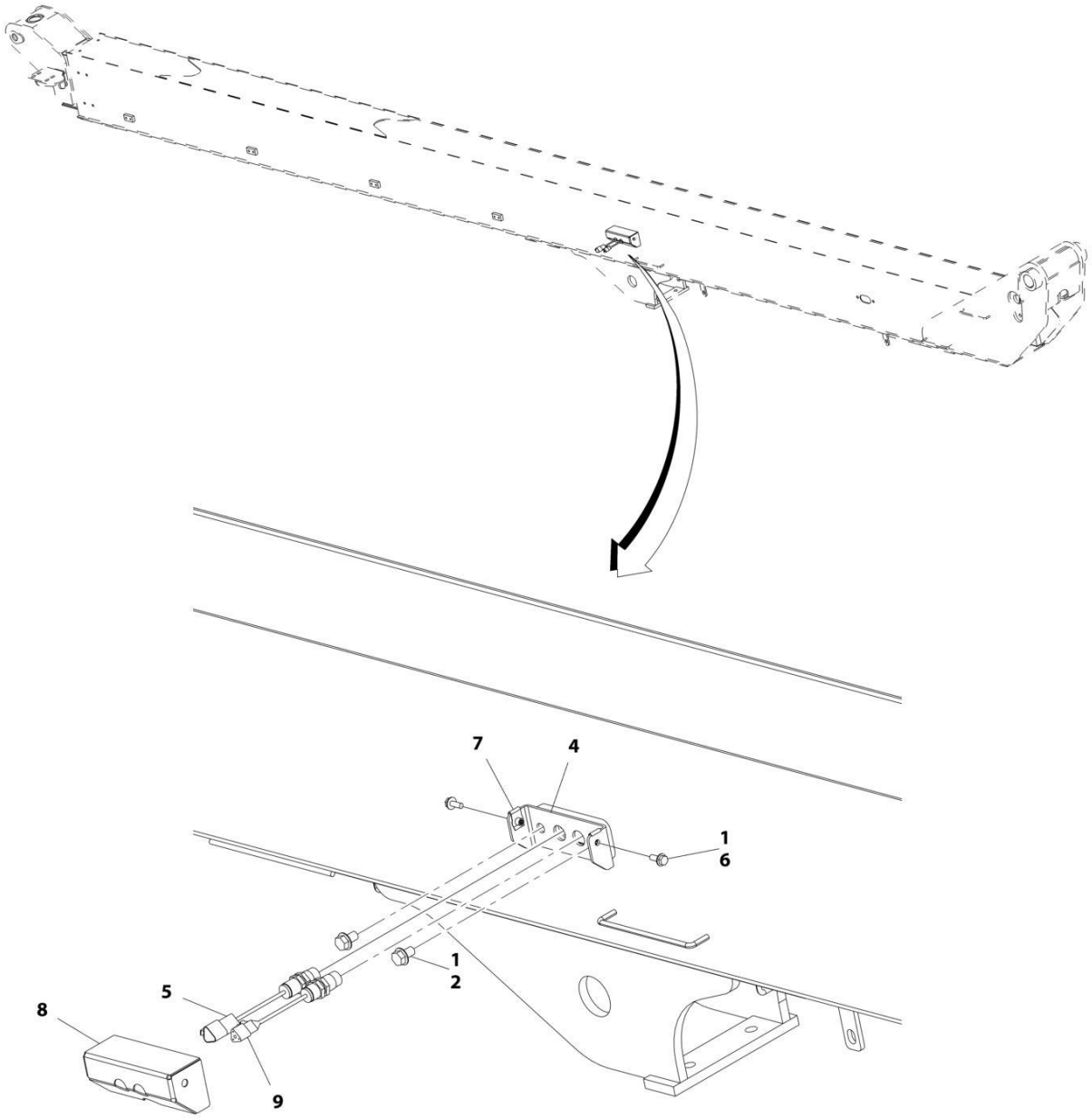

FIGURE 4-18. CAPACITY SWITCH INSTALLATION

ITEM	PART NUMBER	QTY	DESCRIPTION	REV
	1001173233	Ref	CAPACITY SWITCH INSTALLATION	D
1	0100011	AR	Compound, Locking	
2	5251008	2	Bolt, M10 x 16	
4	1001165540	1	Plate, Mounting **(SN 0300203771 through 0300213436)**	
5	1001170847	1	Sensor, Proximity	
5	4460536	1	Connector - 3 Position	
5	4460464	3	Pin, Male	
6	5250608	2	Bolt, M6 x 16 **(SN 0300203771 through 0300213436)**	
7	1001130220	2	Nut, M6 Tinnerman **(SN 0300203771 through 0300213436)**	
8	1001180608	1	Bracket, Cover **(SN 0300203771 through 0300213436)**	
8	1001204715	1	Bracket, Cover **(SN 0300213437 through 0300272360, SN E300000100 through E300007988, SN 1300007289 through 1300007393, Except SN 0300272174 through 0300272184, Excluding E300007847)**	
9	1001182570	1	Sensor, Proximity	
9	4460539	1	Connector 3 Position	
9	4460465	3	Socket, Female	

FIGURE 4-19. TRANSPORT SWITCHES INSTALLATION

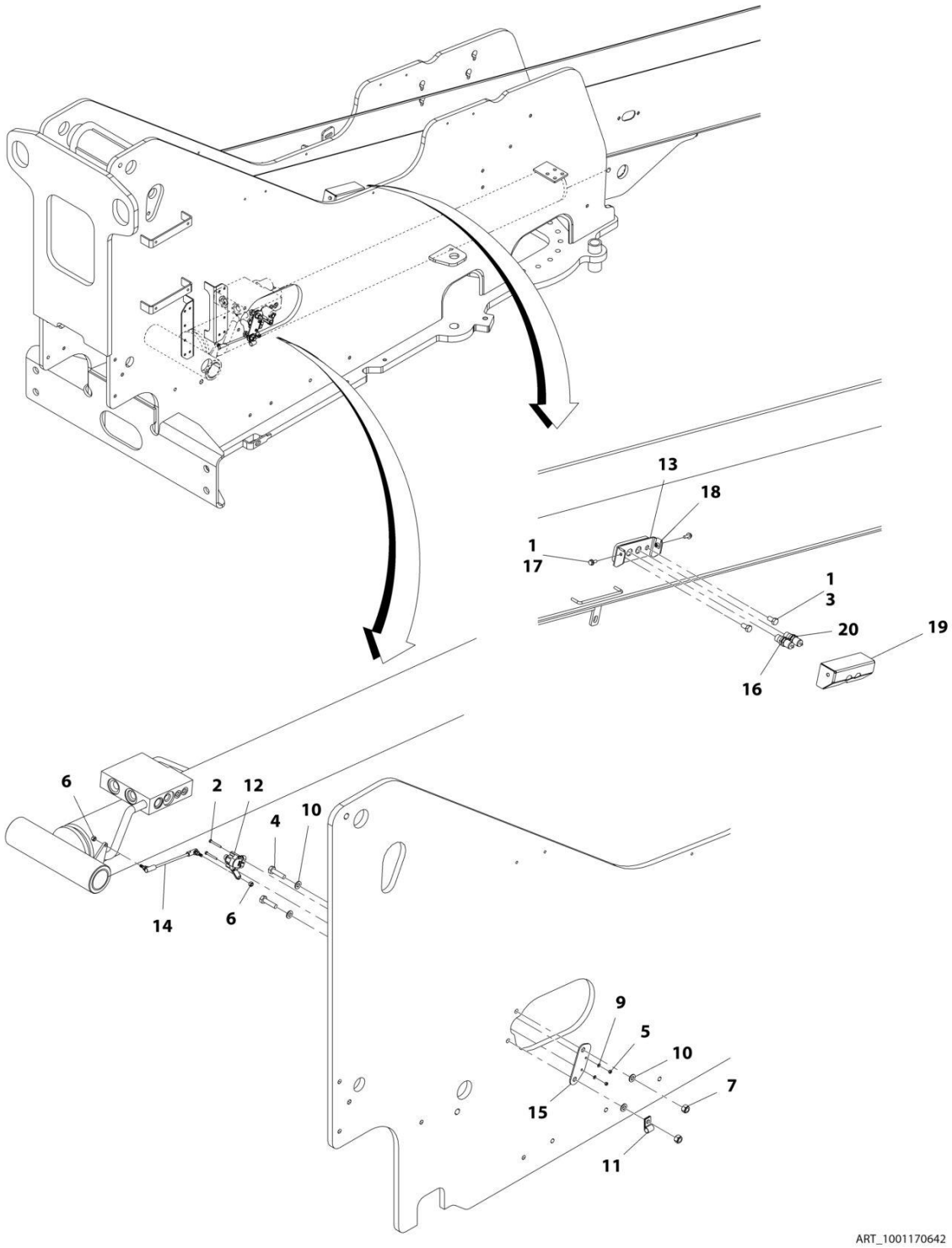

FIGURE 4-19. TRANSPORT SWITCHES INSTALLATION

ITEM	PART NUMBER	QTY	DESCRIPTION	REV
	1001170642	Ref	TRANSPORT SWITCHES INSTALLATION	F
1	0100011	AR	Compound, Locking	
2	0760415	2	Bolt, M4 x 35	
3	5251008	2	Bolt, M10 x 16	
4	0761016	2	Bolt, M10 x 40	
5	3290405	2	Nut, Lock M4 x 0.7	
6	3290605	2	Nut, Lock M6 x 1	
7	3291005	2	Nut, Lock M10 x 1.5	
9	4811400	2	Washer, M4	
10	4812000	4	Washer, M10	
11	8406110	1	Clip	
12	1001118971	1	Angle, Sensor	
13	1001165540	1	Plate, Mounting **(SN 0300203771 through 0300213436)**	
14	1001170564	1	Link, Sensor	
15	1001170565	1	Bracket	
16	1001170847	1	Sensor, Proximity	
16	4460536	1	Connector - 3 Position	
16	4460464	3	Pin, Male	
17	5250608	2	Bolt, M6 x 16 **(SN 0300203771 through 0300213436)**	
18	1001130220	2	Nut, Tinnerman M6 **(SN 0300203771 through 0300213436)**	
19	1001180608	1	Bracket, Switch Cover **(SN 0300203771 through 0300213436)**	
19	1001204715	1	Bracket, Switch Cover **(SN 0300213437 through 0300272360, SN E300000100 through E300007988, SN 1300007289 through 1300007393, Except SN 0300272174 through 0300272184, Excluding E300007847)**	
20	1001182570	1	Sensor, Proximity	
20	4460539	1	Connector - 3 Position	
20	4460465	3	Socket, Female	

FIGURE 4-20. PLATFORM SUPPORT INSTALLATION - WITHOUT LSS

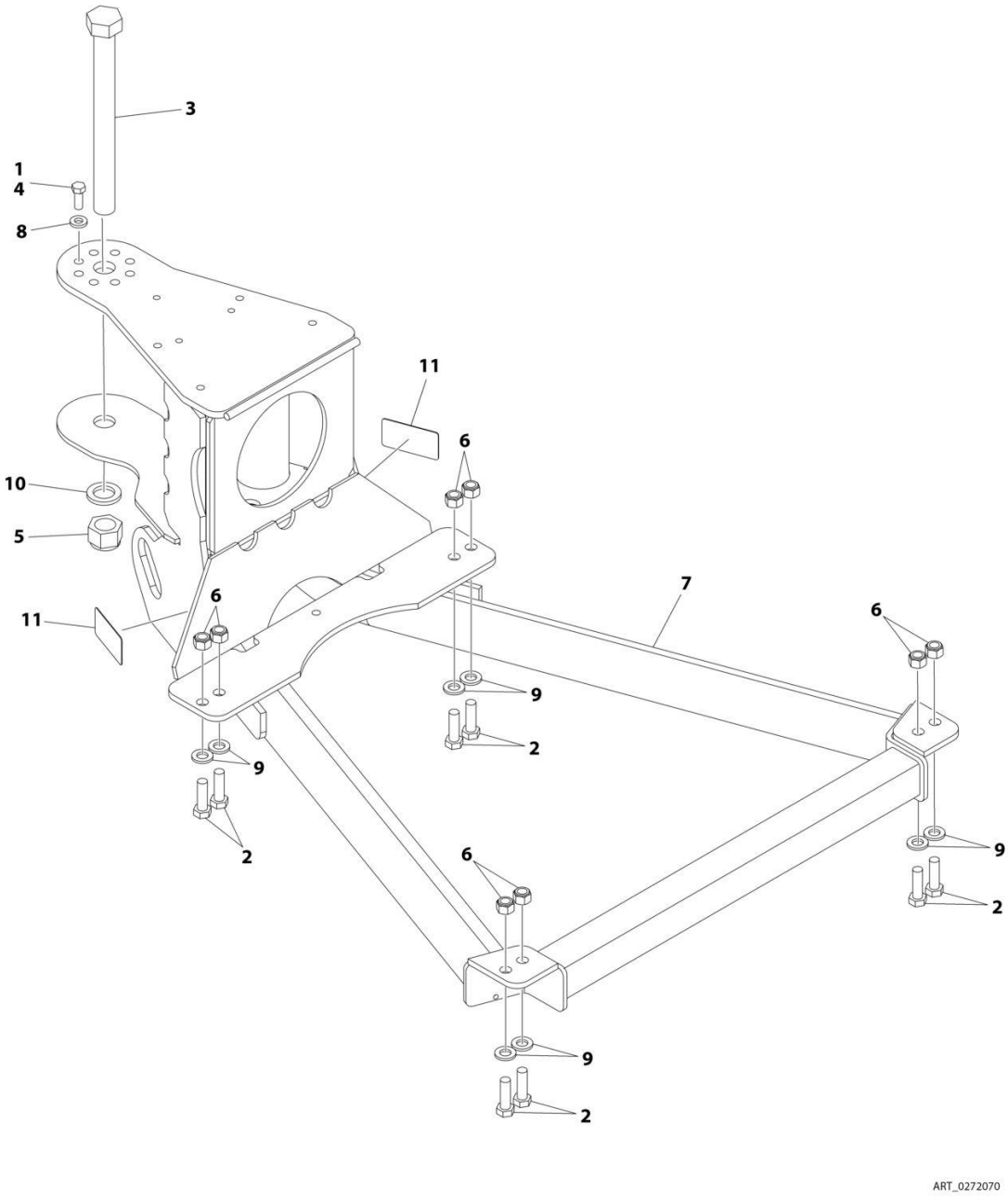

FIGURE 4-20. PLATFORM SUPPORT INSTALLATION - WITHOUT LSS

ITEM	PART NUMBER	QTY	DESCRIPTION	REV
	0272070	Ref	PLATFORM SUPPORT INSTALLATION - WITHOUT LSS	I
1	0100011	AR	Compound, Locking	
2	0641812	AR	Bolt 1/2 x 1-1/2	
2	0761216	AR	Bolt M12 x 40	
3	0642684	1	Bolt 1 x 10-1/2	
4	0681608	8	Bolt 3/8 x 1	
5	3300243	1	Nut 1	
6	3311805	AR	Nut 1/2	
6	3291205	AR	Nut M12	
7	4846573	1	Support	
8	4891600	8	Washer 3/8	
9	4891800	AR	Washer 1/2	
9	5241200	AR	Washer M12	
10	4892600	1	Washer 1	
11	1001216630	2	Decal - Tie Down/No Lift	

FIGURE 4-21. PLATFORM SUPPORT INSTALLATION WITH 4 CELL LSS

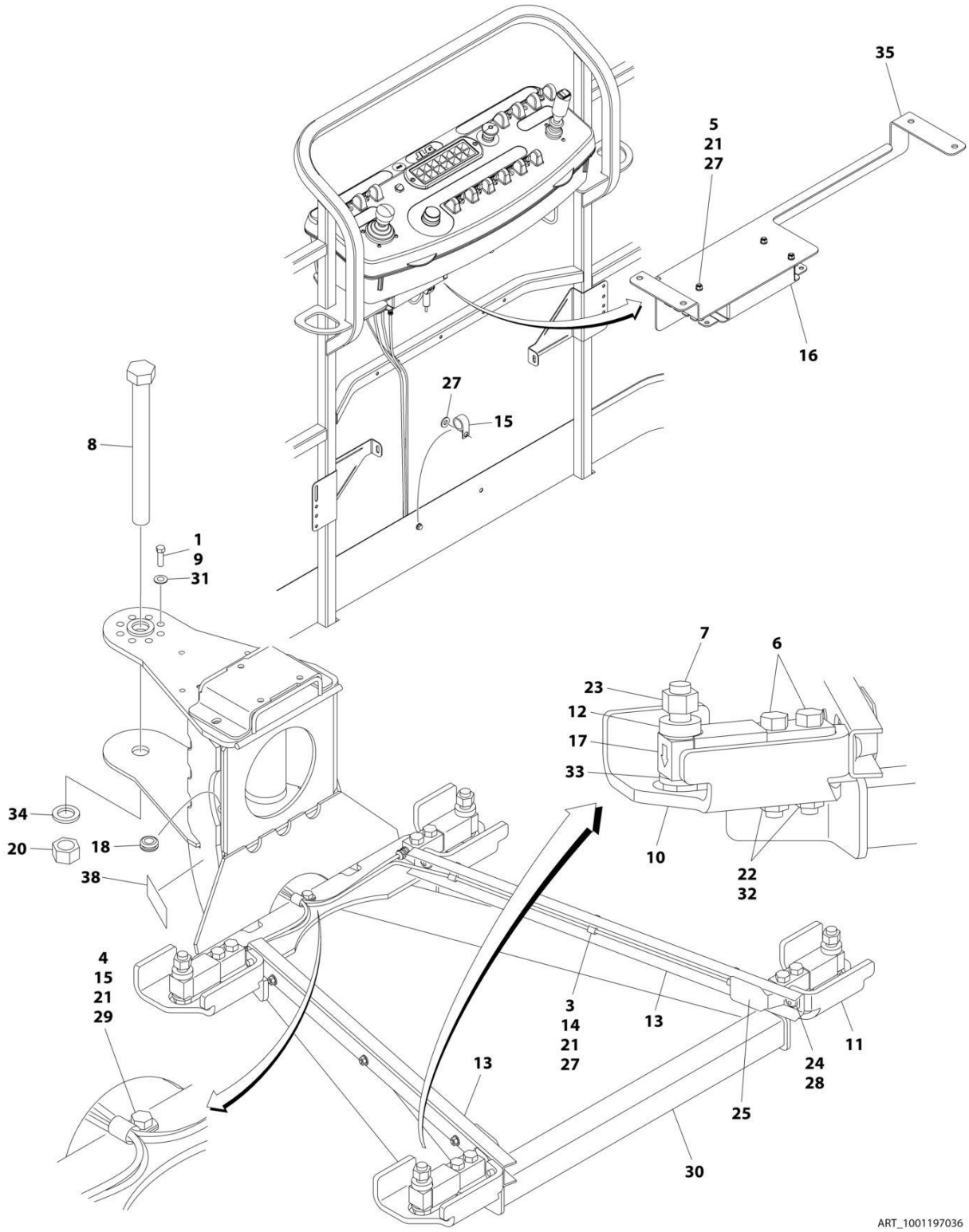

FIGURE 4-21. PLATFORM SUPPORT INSTALLATION WITH 4 CELL LSS

ITEM	PART NUMBER	QTY	DESCRIPTION	REV
	1001197036	Ref	PLATFORM SUPPORT INSTALLATION WITH 4 CELL LSS	E
1	0100011	AR	Compound, Locking	
2	0100048	AR	Silicon, Compound (Not Shown)	
3	0641405	6	Bolt 1/4 x 5/8	
4	0641407	1	Bolt 1/4 x 7/8	
5	0641416	3	Bolt 1/4 x 2	
6	0641822	8	Bolt 1/2 x 2-3/4	
7	0642024	4	Bolt 5/8 x 3	
8	0642684	1	Bolt 1/8 x 10-1/2	
9	0681608	8	Bolt 3/8 x 1	
10	0902919	2	Bracket, LH	
11	0902920	2	Bracket, RH	
12	0962450	4	Bushing, Spacer	
13	1271538	2	Channel, Load Cell Wire	
14	1320136	6	Clamp, Cable	
15	1320224	2	Clamp, Cable	
16	1600387	1	Controller, Load Sense	
17	2420202	4	Gauge	
18	2540038	1	Grommet	
20	3272605	1	Nut 1	
21	3311405	10	Nut 1/4	
22	3311805	8	Nut 1/2	
23	3312005	4	Nut 5/8	
24	3900283	4	Screw 3/8 x 3/4	
25	4061054	2	Shield	
26	4240033	AR	Tie-Strap (Not Shown)	
27	4711400	13	Washer 1/4	
28	4711600	4	Washer 3/8	
29	4751400	1	Washer 1/4	
30	4846573	1	Weldment	
31	4891600	8	Washer 3/8	
32	4891800	8	Washer 1/2	
33	4892000	4	Washer 5/8	
34	4892600	1	Washer 1	
35	1001113483	1	Bracket	
36	1001120371	1	LSS Harness (Not Shown - See ELECTRICAL SECTION for Breakdown)	
37	4460428	1	Connector, Strain Relief (Not Shown)	
38	1001216630	2	Decal - Tie Down/No Lift	

FIGURE 4-22. PLATFORM SUPPORT INSTALLATION - WITH 1 CELL LSS

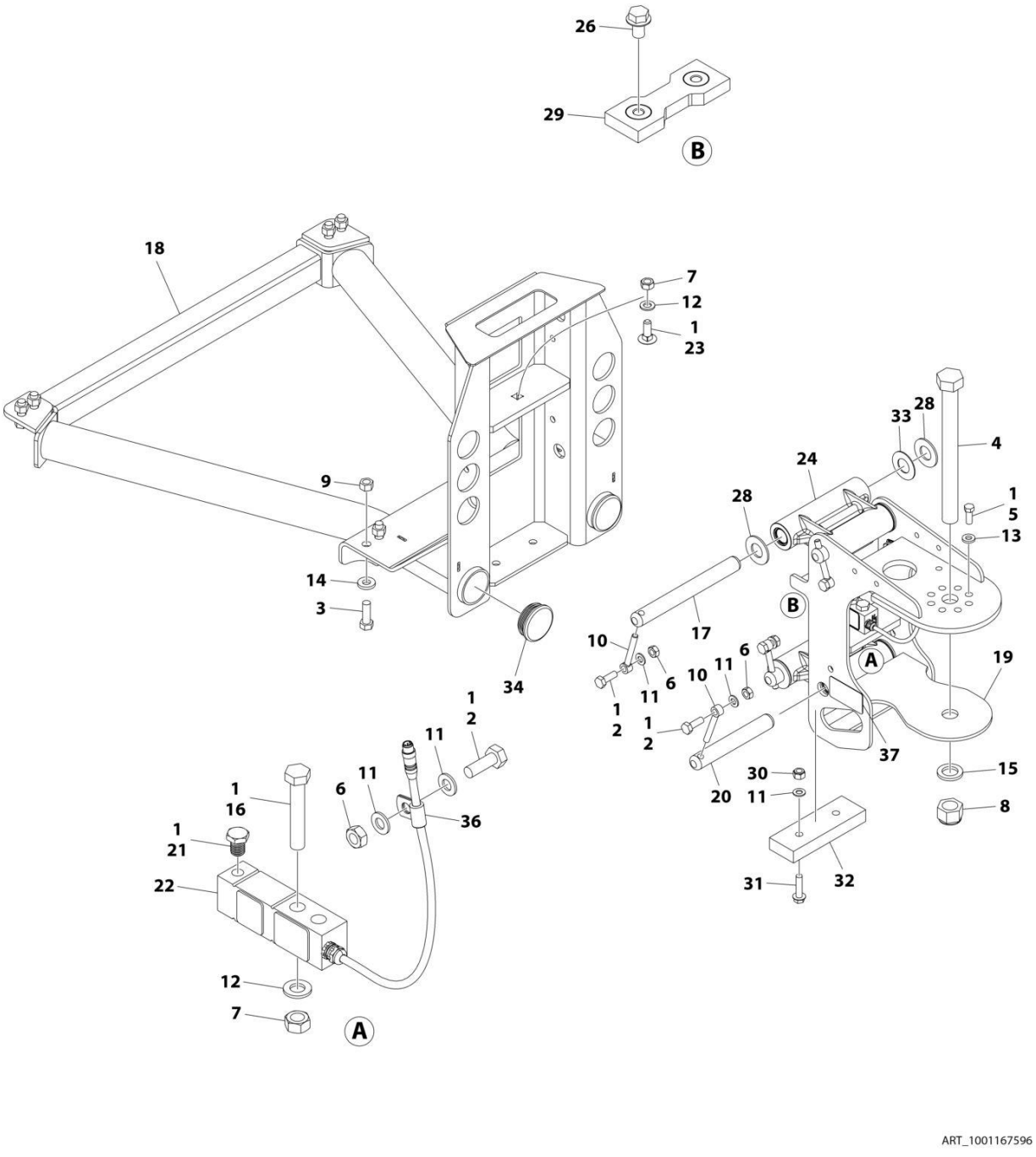

FIGURE 4-22. PLATFORM SUPPORT INSTALLATION - WITH 1 CELL LSS

ITEM	PART NUMBER	QTY	DESCRIPTION	REV
	1001167596	Ref	PLATFORM SUPPORT INSTALLATION - WITH 1 CELL LSS	L
1	0100011	AR	Compound, Locking	
2	0761014	AR	Bolt M10 x 30	
3	0641812	8	Bolt 1/2 x 1-1/2	
3	0761216	8	Bolt M12 x 40	
4	0642684	1	Bolt 1 x 10-1/2	
5	0681608	8	Bolt 3/8 x 1	
6	3291001	AR	Nut M10	
7	3291201	3	Nut M12	
8	3300243	1	Nut 1	
9	3311805	8	Nut 1/2	
9	3291205	8	Nut M12	
10	3841143	4	Keeper	
11	4812000	AR	Washer M10	
12	4812100	3	Washer M12	
13	4891600	8	Washer 3/8	
14	4891800	8	Washer 1/2	
14	5241200	8	Washer M12	
15	4892600	1	Washer 1	
16	1001098828	2	Bolt M12 x 70 Grade 10.9	
17	1001167565	2	Pin	
18	1001200494	1	Support	
19	1001167567	1	Platform Support	
20	1001168402	2	Pin	
21	1001188622	1	Screw M12	
22	1001247468	1	GAUGE,LOAD SENSING	
23	1001188844	1	Bolt M12 x 35	
24	1001201351	2	LSS Link Assembly	
24	1001187382	4	Bearing	
24	1001187383	4	Seal	
26	5251008	2	Bolt M10 x 16	
27	1001175244	1	Harness, LSS (Not Shown) **(SN 0300203771 through 0300222801, SN E300000100 through E300003814)**	
28	1001189002	8	Bearing	
29	1001190985	1	Pad, Wear	
30	3291005	2	Nut M10	
31	5251016	1	Bolt M10 x 40	
32	1001200491	1	Plate	
33	1001189001	4	Bearing	
34	1001204725	2	Plug	
35	4460428	1	Connector, Strain Relief (Not Shown) **(SN 0300203771 through 0300222801, SN E300000100 through E300003814)**	
36	91203039	1	Clamp **(SN 0300222802 through 0300272360, SN E300003815 through E300007988, SN 1300007289 through 1300007393, Except SN 0300272174 through 0300272184, Excluding E300007847)**	
37	1001216630	2	Decal - Tie Down/No Lift **(SN 0300222802 through 0300272360, SN E300003815 through E300007988, SN 1300007289 through 1300007393, Except SN 0300272174 through 0300272184, Excluding E300007847)**	
38	1001238421	Ref	Kit, Platform Leveling (Not Shown) **(SN E300006390 through E300007988, Excluding E300007847)**	

FIGURE 4-23. CABLES AND CLAMPS INSTALLATION - 400S (ANSI, ANSI EXPORT, CSA AND CHINA SPECS)

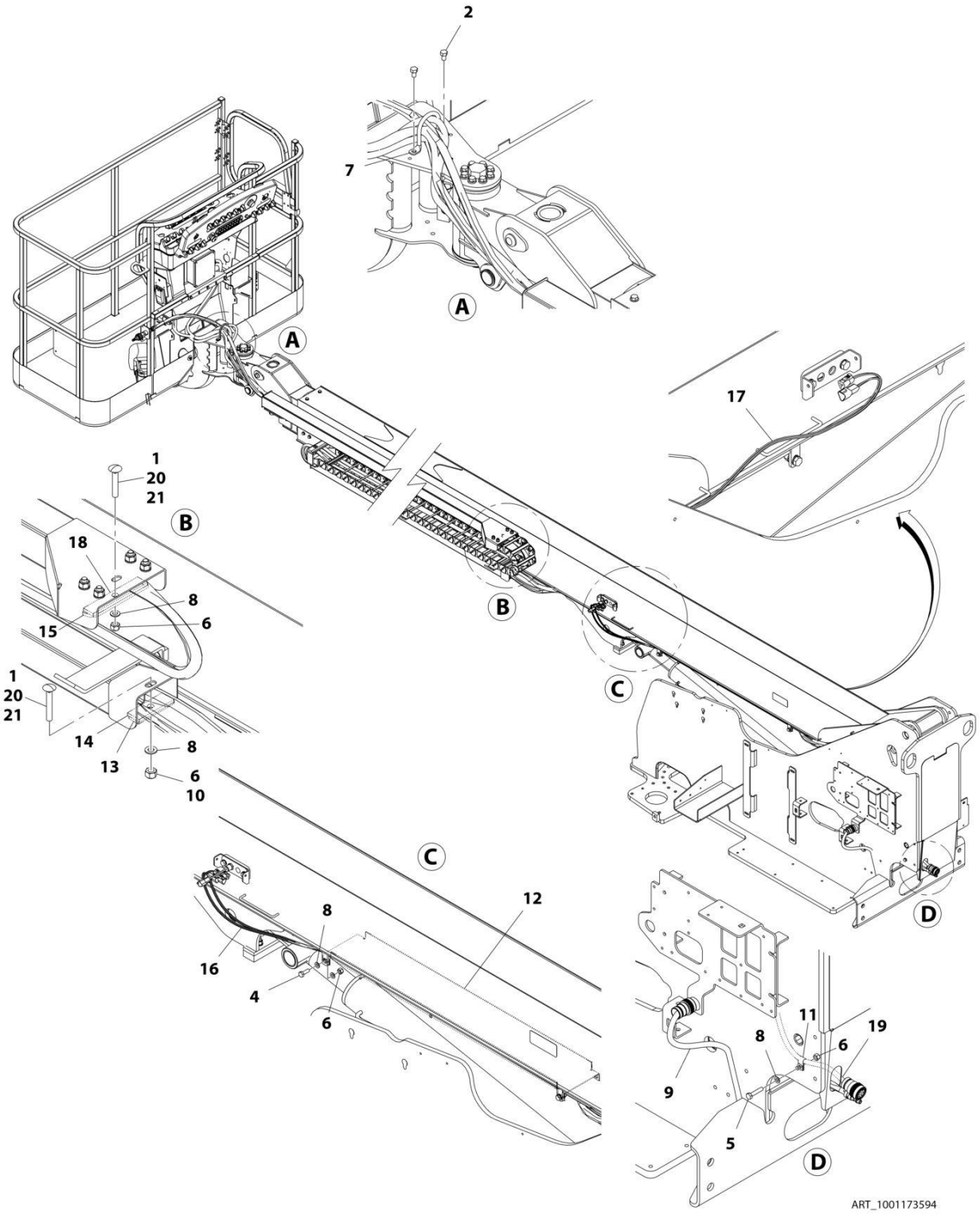

FIGURE 4-23. CABLES AND CLAMPS INSTALLATION - 400S (ANSI, ANSI EXPORT, CSA AND CHINA SPECS)

ITEM	PART NUMBER	QTY	DESCRIPTION	REV
	1001173594	Ref	CABLES AND CLAMPS INSTALLATION - 400S (ANSI, ANSI EXPORT, CSA AND CHINA SPECS)	D
1	0630563	2	Bolt, Carriage M10 x 60	
2	0641605	AR	Bolt, 3/8 x 5/8	
2	0641504	AR	Bolt, 5/16 x 1/2	
4	0761014	4	Bolt, M10 x 30	
5	0761018	1	Bolt, M10 x 50	
6	3291005	7	Nut, Lock M10 x 1.5	
7	3841340	1	Hose Loop	
8	4812000	12	Washer, M10	
9	1001176952	1	Harness, Main Boom Cable (See ELECTRICAL SECTION for Breakdown)	
10	5261018	AR	Nut, M10	
11	8406110	1	Clip	
12	1001172128	1	Bracket, Hose Cover	
13	1001173456	1	Clamp	
14	1001173665	1	Clamp	
15	1001173761	1	Bracket	
16	1001173807	1	Harness, Capacity Switch (See ELECTRICAL SECTION for Breakdown)	
17	1001173808	1	Harness, Telescope In Proximity Sensors (See ELECTRICAL SECTION for Breakdown)	
18	1001173927	1	Clamp	
19	1060985	1	Cable, Electrical 12/3 **(SN 0300203771 through 0300212083)**	
19	1001203434	1	Cable, Electrical 12/3 **(SN 0300212083 through 0300272360, Except SN 0300272174 through 0300272184)**	
20	0100081	AR	Adhesive	
21	1001181329	AR	Bolt, Carriage M10 x 70	

FIGURE 4-24. CABLES AND CLAMPS INSTALLATION - 400S (CE SPECS) (SN 0300203771 through 0300212082)

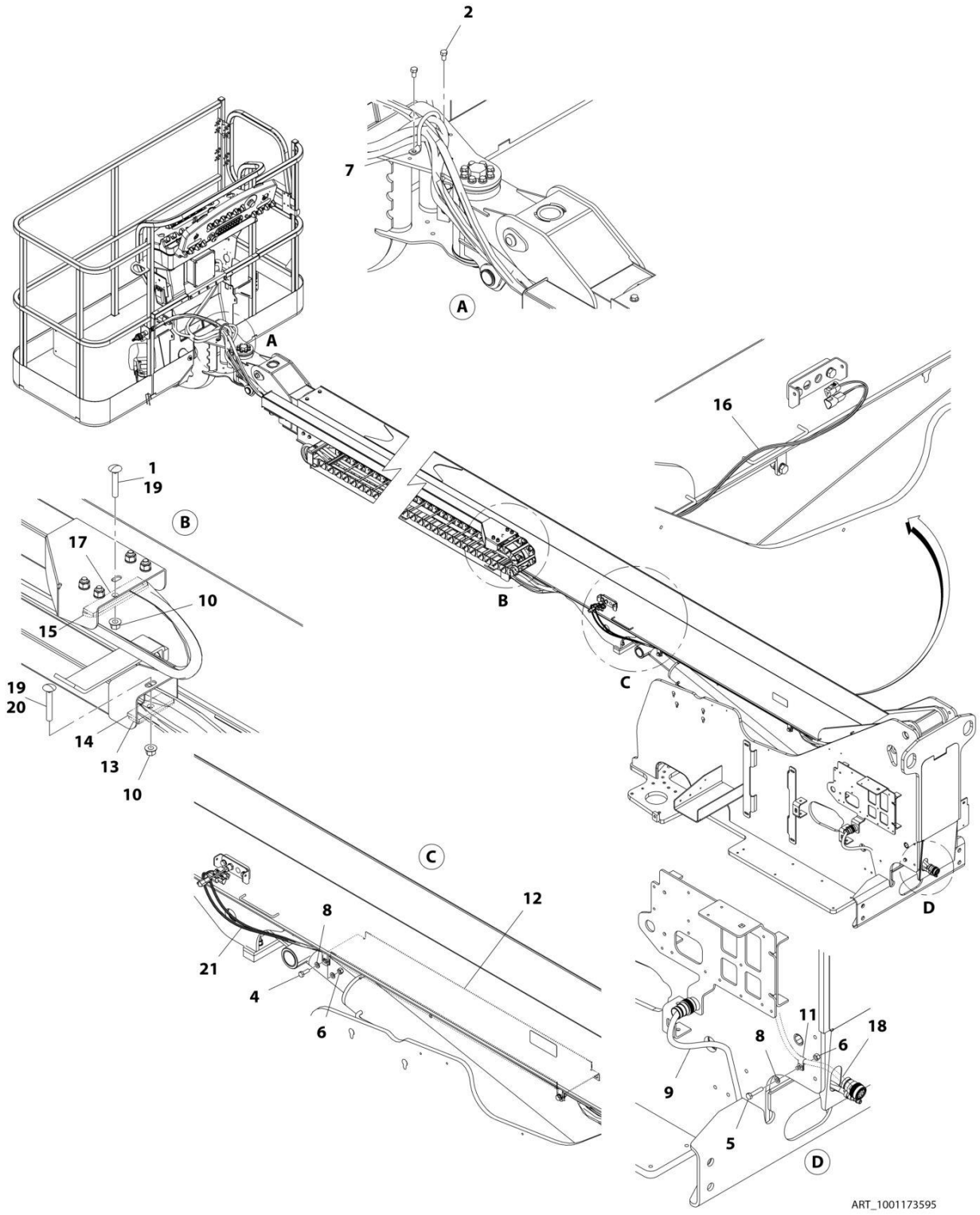

FIGURE 4-24. CABLES AND CLAMPS INSTALLATION - 400S (CE SPECS) (SN 0300203771 through 0300212082)

ITEM	PART NUMBER	QTY	DESCRIPTION	REV
	1001173595	Ref	CABLES AND CLAMPS INSTALLATION - 400S (CE SPECS)	D
1	0630563	1	Bolt, Carriage M10 x 60	
2	0641605	2	Bolt, 3/8 x 5/8	
4	0761014	4	Bolt, M10 x 30	
5	0761018	1	Bolt, M10 x 50	
6	3291005	5	Nut, Lock M10 x 1.5	
7	3841340	1	Hose Loop	
8	4812000	10	Washer, M10	
9	1001176952	1	Harness, Main Boom Cable (See ELECTRICAL SECTION for Breakdown)	
10	5261018	2	Nut, M10	
11	8406110	1	Clip	
12	1001172128	1	Bracket, Hose Cover	
13	1001173456	1	Clamp	
14	1001173665	1	Clamp	
15	1001173761	1	Bracket	
16	1001173808	1	Harness, Telescope In Proximity Sensors (See ELECTRICAL SECTION for Breakdown)	
17	1001173927	1	Clamp	
18	1060986	1	Cable, Electrical 12/3	
19	0100081	AR	Adhesive	
20	1001181329	1	Bolt, Carriage M10 x 70	
21	1001173807	1	Harness, Capacity Switch (See ELECTRICAL SECTION for Breakdown)	

FIGURE 4-25. CABLES AND CLAMPS INSTALLATION - 400S (CE SPECS) (SN 0300212083 through 0300272360, SN E300000100 through E300007988, SN 1300007289 through 1300007393)

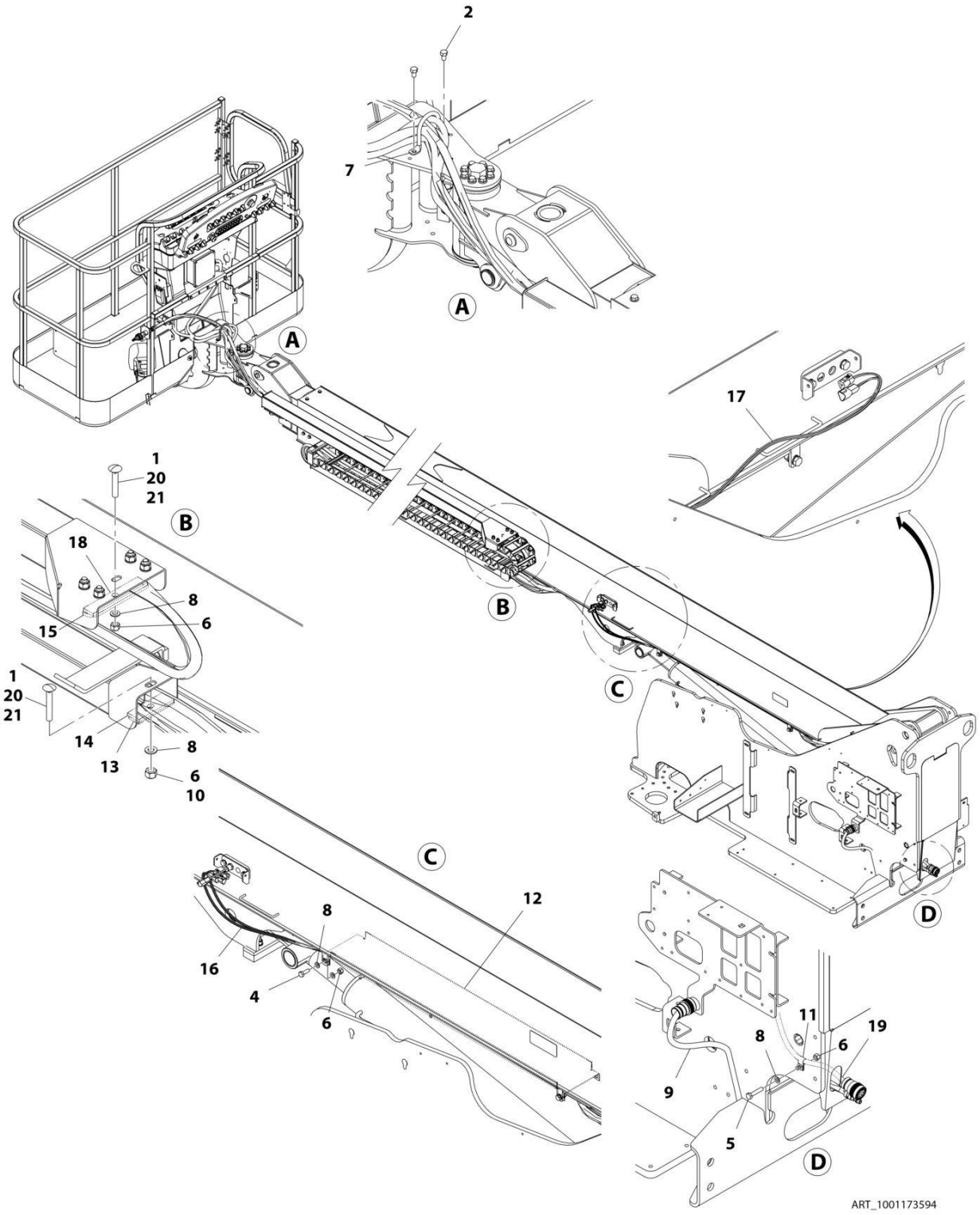

FIGURE 4-25. CABLES AND CLAMPS INSTALLATION - 400S (CE SPECS) (SN 0300212083 through 0300272360, SN E300000100 through E300007988, SN 1300007289 through 1300007393)

ITEM	PART NUMBER	QTY	DESCRIPTION	REV
	1001173594	Ref	CABLES AND CLAMPS INSTALLATION - 400S (CE SPECS)	D
1	0630563	2	Bolt, Carriage M10 x 60	
2	0641605	AR	Bolt, 3/8 x 5/8	
2	0641504	AR	Bolt, 5/16 x 1/2	
4	0761014	4	Bolt, M10 x 30	
5	0761018	1	Bolt, M10 x 50	
6	3291005	7	Nut, Lock M10 x 1.5	
7	3841340	1	Hose Loop	
8	4812000	12	Washer, M10	
9	1001176952	1	Harness, Main Boom Cable (See ELECTRICAL SECTION for Breakdown)	
10	5261018	AR	Nut, M10	
11	8406110	1	Clip	
12	1001172128	1	Bracket, Hose Cover	
13	1001173456	1	Clamp	
14	1001173665	1	Clamp	
15	1001173761	1	Bracket	
16	1001173807	1	Harness, Capacity Switch (See ELECTRICAL SECTION for Breakdown)	
17	1001173808	1	Harness, Telescope In Proximity Sensors (See ELECTRICAL SECTION for Breakdown)	
18	1001173927	1	Clamp	
19	1001203434	1	Cable, Electrical 12/3	
20	0100081	AR	Adhesive	
21	1001181329	AR	Bolt, Carriage M10 x 70	

FIGURE 4-26. CABLES AND CLAMPS INSTALLATION - 460SJ (ANSI, ANSI EXPORT AND CSA SPECS) (SN 0300203771 through 0300212083)

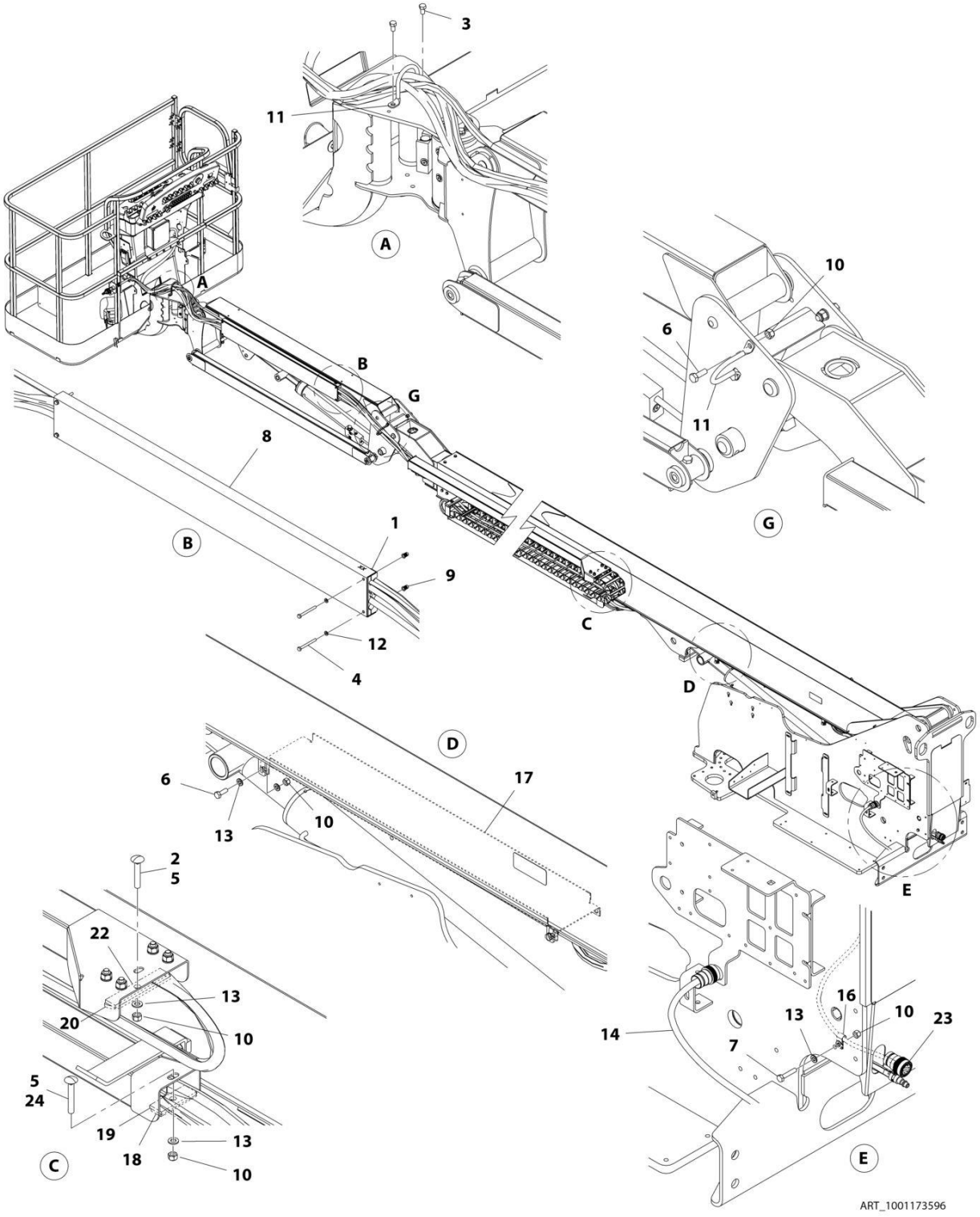

FIGURE 4-26. CABLES AND CLAMPS INSTALLATION - 460SJ (ANSI, ANSI EXPORT AND CSA SPECS) (SN 0300203771 through 0300212083)

ITEM	PART NUMBER	QTY	DESCRIPTION	REV
	1001173596	Ref	CABLES AND CLAMPS INSTALLATION - 460SJ (ANSI, ANSI EXPORT AND CSA SPECS)	C
1	0561237	2	Block, Clamp	
2	0630563	1	Bolt, Carriage M10 x 60	
3	0641605	2	Bolt, 3/8 x 5/8	
4	0700620	4	Bolt, M6 x 60	
5	0100081	1	Adhesive	
6	0761014	6	Bolt, M10 x 30	
7	0761018	1	Bolt, M10 x 50	
8	1670769	1	Cover	
9	1001176636	4	Nut, Rivet M6	
10	3291005	7	Nut, Lock M10 x 1.5	
11	3841340	2	Hose Loop	
12	4811700	4	Washer, M6	
13	4812000	10	Washer, M10	
14	1001176953	1	Harness, Main Boom Cable (See ELECTRICAL SECTION for Breakdown)	
15	5261018	2	Nut, Flange M10	
16	8406110	1	Clip	
17	1001172128	1	Bracket, Hose Cover	
18	1001173456	1	Clamp	
19	1001173665	1	Clamp	
20	1001173761	1	Bracket	
21	1001173808	1	Harness, Telescope In Proximity Sensors (See ELECTRICAL SECTION for Breakdown)	
22	1001173927	1	Clamp	
23	1060983	1	Cable, Electrical 12/3	
24	1001181329	1	Bolt, Carriage M10 x 70	

FIGURE 4-27. CABLES AND CLAMPS INSTALLATION - 460SJ (CE SPECS) (SN 0300203771 through 0300212083)

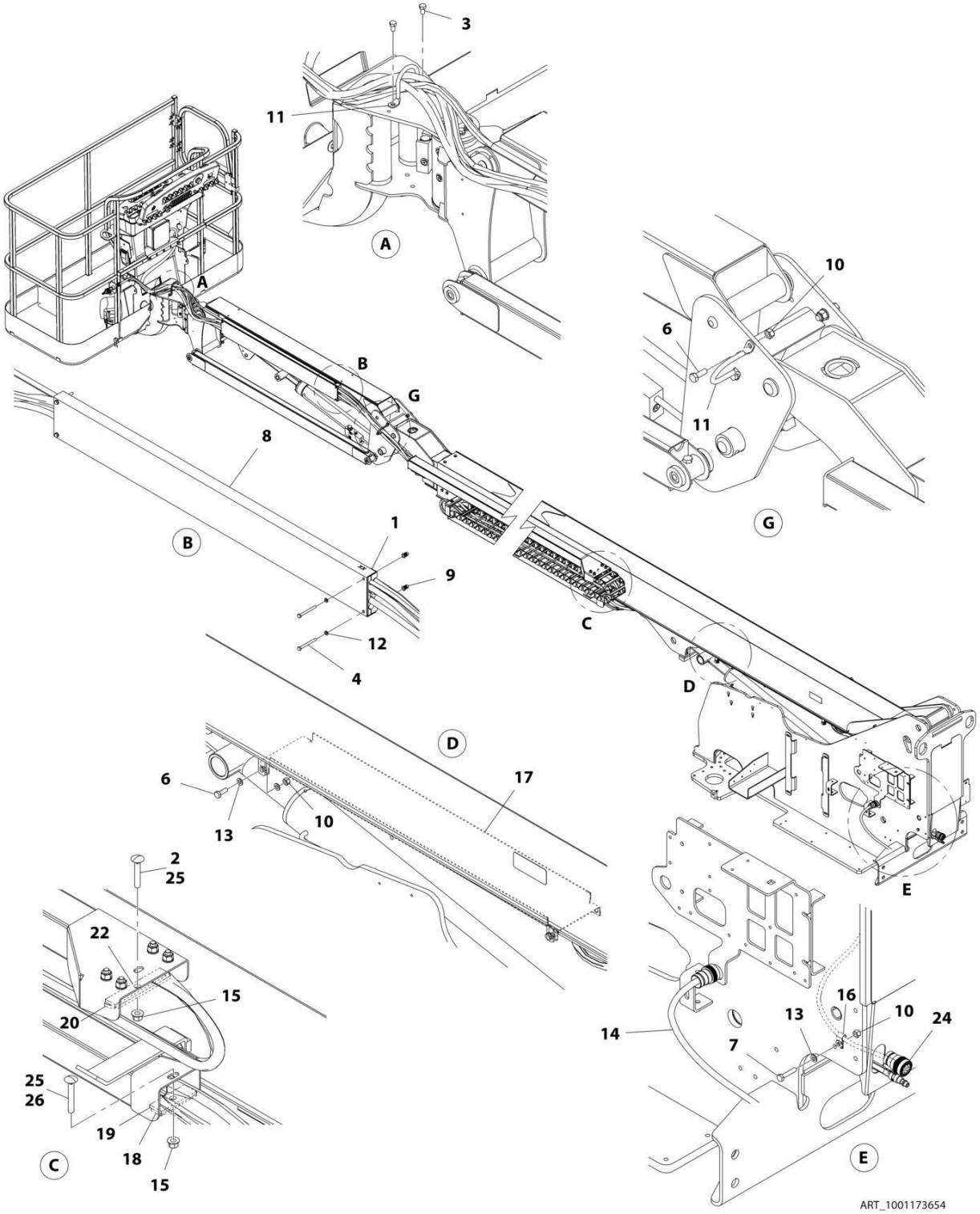

FIGURE 4-27. CABLES AND CLAMPS INSTALLATION - 460SJ (CE SPECS) (SN 0300203771 through 0300212083)

ITEM	PART NUMBER	QTY	DESCRIPTION	REV
	1001173654	Ref	CABLES AND CLAMPS INSTALLATION - 460SJ (CE SPECS)	C
1	0561237	2	Block, Clamp	
2	0630563	1	Bolt, Carriage M10 x 60	
3	0641605	2	Bolt, 3/8 x 5/8	
4	0700620	4	Bolt, M6 x 60	
6	0761014	6	Bolt, M10 x 30	
7	0761018	1	Bolt, M10 x 50	
8	1670769	1	Cover	
9	1001176636	4	Nut, Rivet M6	
10	3291005	7	Nut, Lock M10 X 1.5	
11	3841340	2	Hose Loop	
12	4811700	4	Washer, M6	
13	4812000	10	Washer, M10	
14	1001176953	1	Harness, Main Boom Cable (See ELECTRICAL SECTION for Breakdown)	
15	5261018	2	Nut, Flange M10	
16	8406110	1	Clip	
17	1001172128	1	Bracket, Hose Cover	
18	1001173456	1	Clamp	
19	1001173665	1	Clamp	
20	1001173761	1	Bracket	
21	1001173808	1	Harness, Telescope In Proximity Sensors (See ELECTRICAL SECTION for Breakdown)	
22	1001173927	1	Clamp	
24	1060984	1	Cable, Electrical 12/3	
25	0100081	1	Adhesive	
26	1001181329	1	Bolt, Carriage M10 x 70	

FIGURE 4-28. CABLES AND CLAMPS INSTALLATION - 460SJ (ALL SPECS) (SN 0300212083 through 0300272360, SN E300000100 through E300007988, SN 1300007289 through 1300007393)

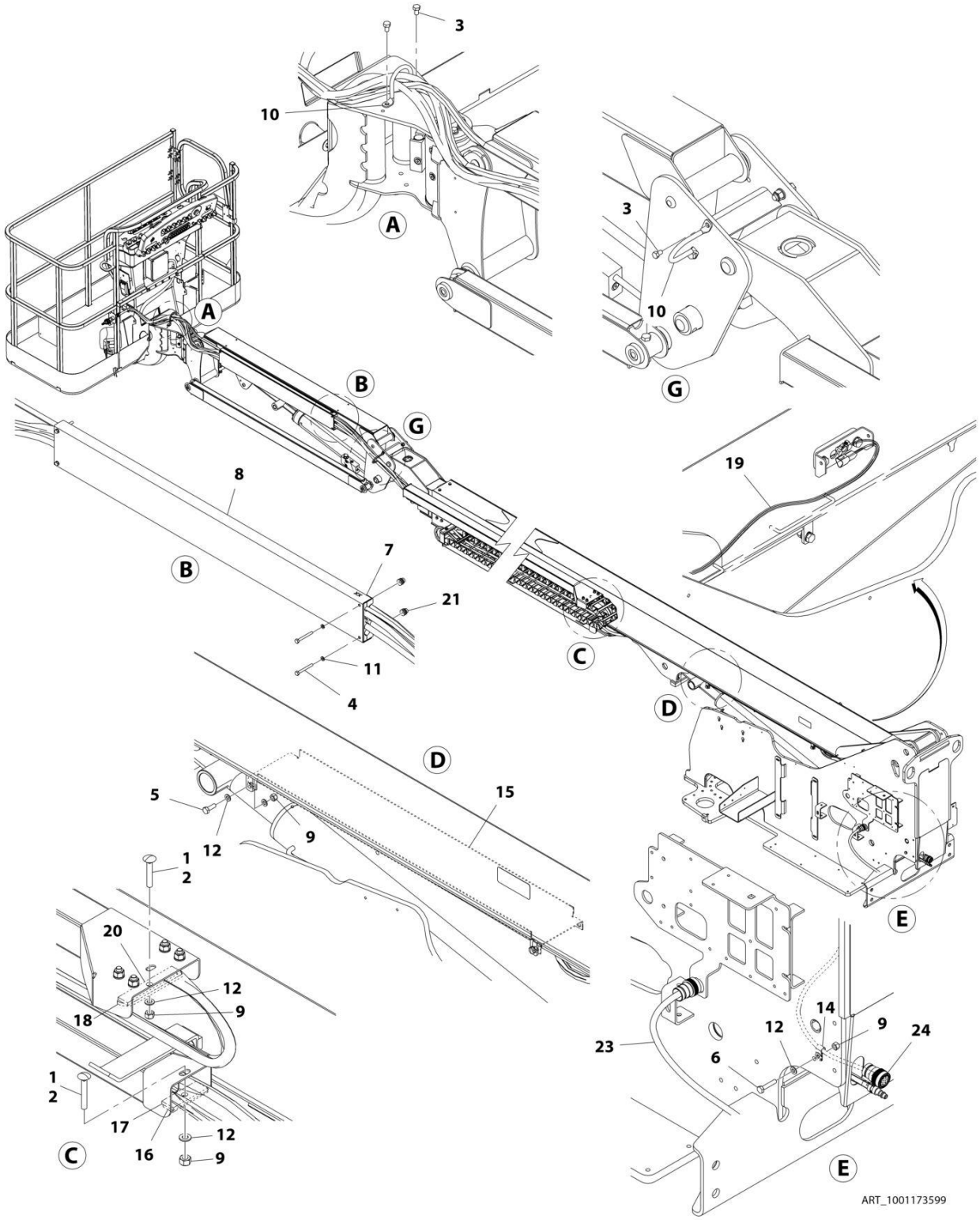

FIGURE 4-28. CABLES AND CLAMPS INSTALLATION - 460SJ (ALL SPECS) (SN 0300212083 through 0300272360, SN E300000100 through E300007988, SN 1300007289 through 1300007393)

ITEM	PART NUMBER	QTY	DESCRIPTION	REV
	1001173599	Ref	CABLES AND CLAMPS INSTALLATION - 460SJ (ALL SPECS)	D
1	0100081	1	Adhesive	
2	0630563	2	Bolt, Carriage M10 x 60	
3	0641605	2	Bolt, 3/6 x 5/8 **(SN 0300203771 through 0300212083)**	
3	0641504	4	Bolt, 5/16 x 1/2 **(SN 0300212083 through 0300272360, Except SN 0300272174 through 0300272184)**	
4	0700620	4	Bolt, M6 x 60 **(SN 0300203771 through 0300212083)**	
4	0641418	4	Bolt, 1/4 x 2-1/4 **(SN 0300212083 through 0300272360, Except SN 0300272174 through 0300272184)**	
5	0761014	4	Bolt, M10 x 30	
6	0761018	1	Bolt, M10 x 50	
7	1321700	2	Block, Clamp **(SN 0300203771 through 0300212083)**	
7	1001203459	2	Block, Clamp **(SN 0300212083 through 0300272360, Except SN 0300272174 through 0300272184)**	
8	1670769	1	Cover	
9	3291005	7	Nut, Lock M10 x 1.5	
10	3841340	2	Hose Loop	
11	4811700	4	Washer, M6	
12	4812000	12	Washer, M10	
13	5261018	2	Nut, Flange M10 **(SN 0300203771 through 0300212083)**	
14	8406110	1	Clip	
15	1001172128	1	Bracket, Hose Cover	
16	1001173456	1	Clamp	
17	1001173665	1	Clamp	
18	1001173761	1	Bracket	
19	1001173808	1	Harness, Telescope In Proximity Sensors (See ELECTRICAL SECTION for Breakdown)	
20	1001173927	1	Clamp	
21	1001176636	4	Nut, Rivet M6 **(SN 0300203771 through 0300212083)**	
21	2080044	4	Nut, Rivet 1/4 **(SN 0300212083 through 0300272360, Except SN 0300272174 through 0300272184)**	
22	1001181329	1	Bolt, Carriage M10 x 70 **(SN 0300203771 through 0300212083)**	
23	1001176953	1	Harness, Main Boom Cable (See ELECTRICAL SECTION for Breakdown)	
24	1060983	1	Cable, Electrical 12/3 **(SN 0300203771 through 0300212083)**	
24	1001203435	1	Cable, Electrical 12/3 **(SN 0300212083 through 0300272360, Except SN 0300272174 through 0300272184)**	

SECTION 5 - PLATFORM

SECTION 5 - PLATFORM

FIGURE 5-1. PLATFORM ASSEMBLY - 30IN X 5FT (76.2CM X 1.52M) WITH SWING GATE (USA BUILT MACHINES)

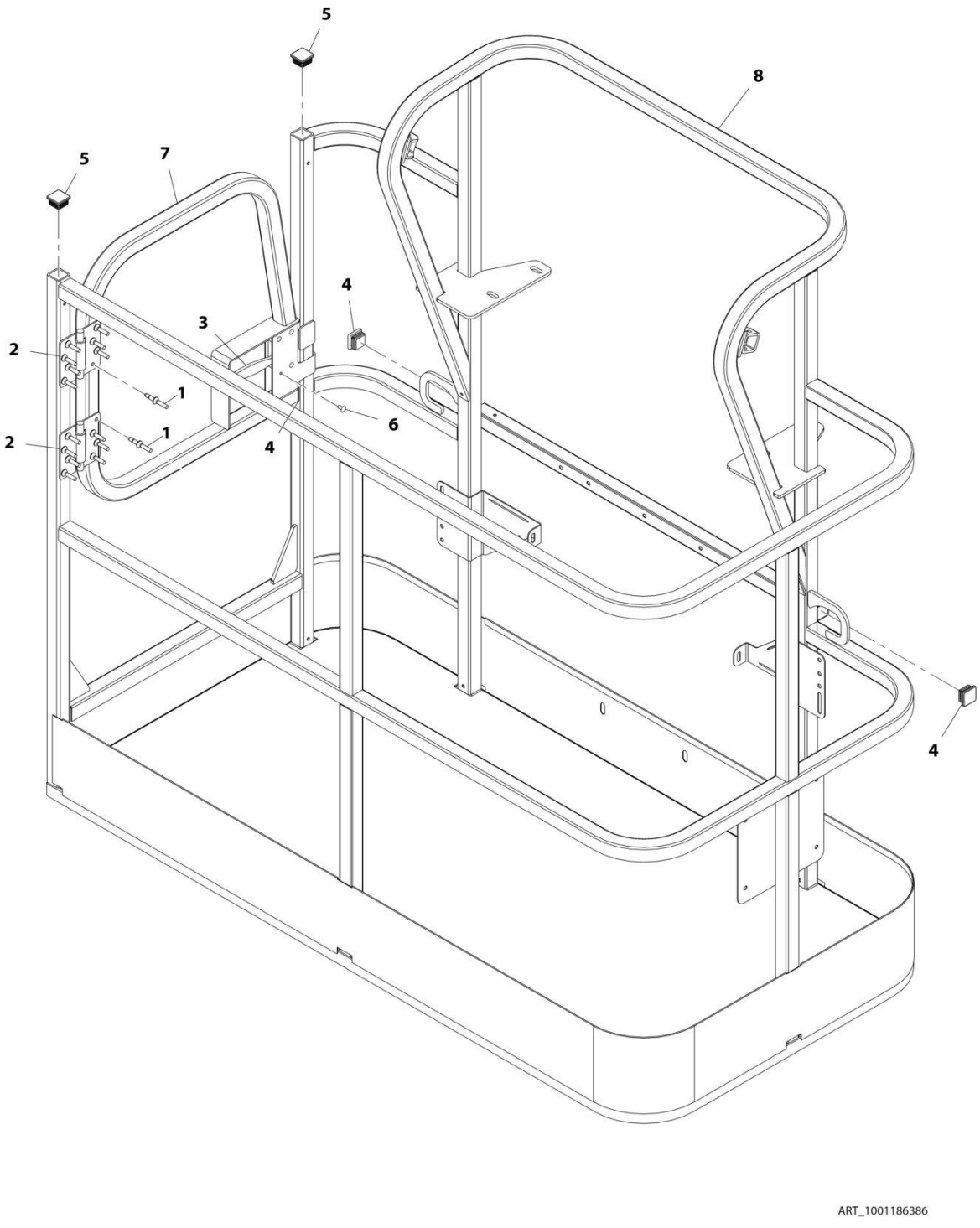

FIGURE 5-1. PLATFORM ASSEMBLY - 30IN X 5FT (76.2CM X 1.52M) WITH SWING GATE (USA BUILT MACHINES)

ITEM	PART NUMBER	QTY	DESCRIPTION	REV
	1001186386	Ref	PLATFORM ASSEMBLY - 30IN X 5FT (76.2CM X 1.52M) WITH SWING GATE (USA BUILT MACHINES)	C
	See Note	Ref	Note: Platform and Mesh must be ordered separately for Platforms with Mesh. See SPECIAL OPTIONS SECTION for Mesh Installations.	
	See Note	Ref	Note: Replacement Decals Must be Ordered Separately - See DECALS SECTION.	
1	2080040	16	Fastener, Huck	
2	2600281	2	Hinge	
3	2940074	1	Latch	
4	3520072	3	Plug	
5	3520198	2	Plug	
6	3820020	4	Rivet	
7	1001144629	1	Gate	
8	See Note	NSS	Platform (Note: Use p/n 1001186386)	

FIGURE 5-2. PLATFORM ASSEMBLY - 36IN X 6FT (91.5CM X 1.83M) WITH SWING GATE (USA BUILT MACHINES)

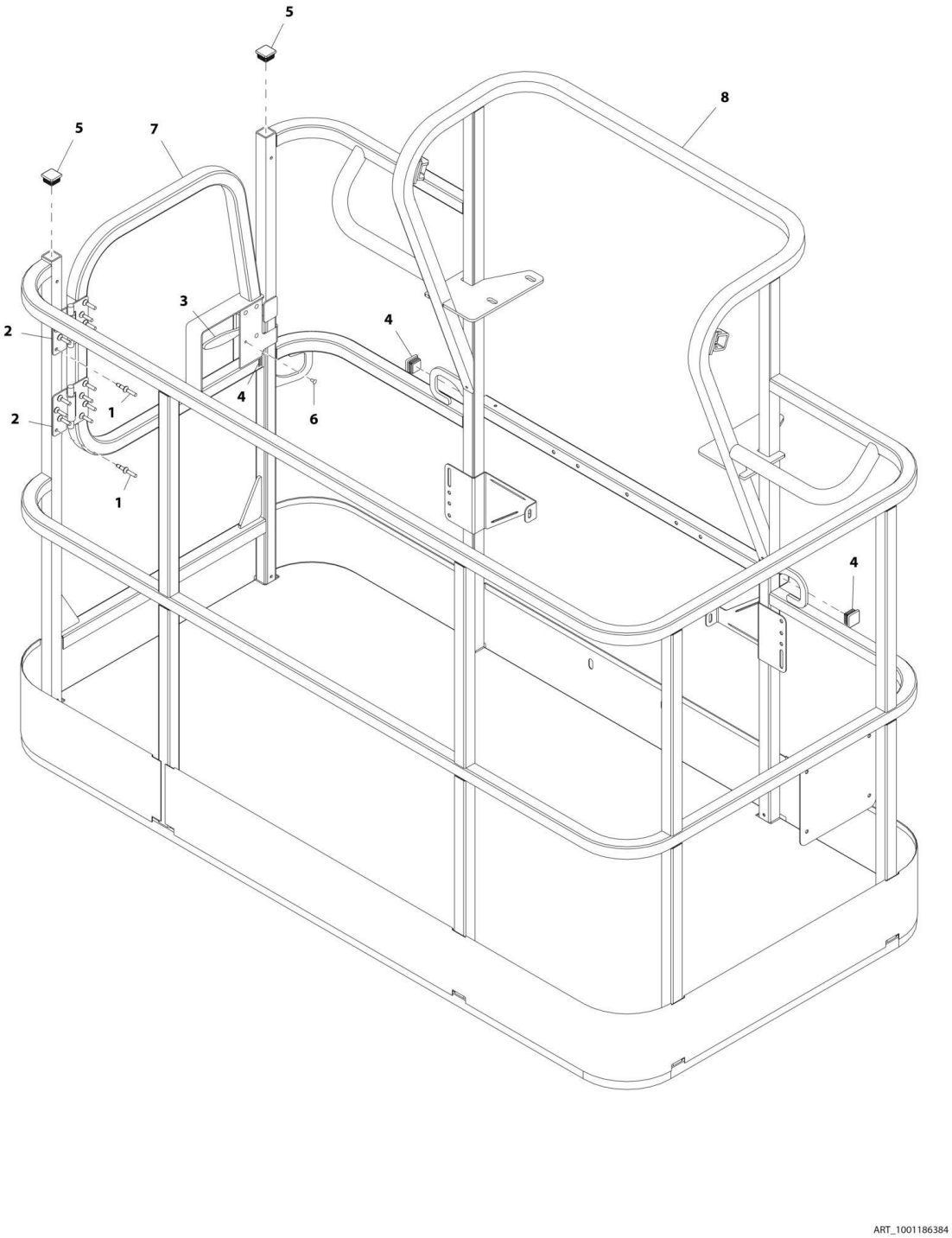

FIGURE 5-2. PLATFORM ASSEMBLY - 36IN X 6FT (91.5CM X 1.83M) WITH SWING GATE (USA BUILT MACHINES)

ITEM	PART NUMBER	QTY	DESCRIPTION	REV
	1001186384	Ref	PLATFORM ASSEMBLY - 36IN X 6FT (91.5CM X 1.83M) WITH SWING GATE (USA BUILT MACHINES)	C
	See Note	Ref	Note: Platform and Mesh must be ordered separately for Platforms with Mesh. See SPECIAL OPTIONS SECTION for Mesh Installations.	
	See Note	Ref	Note: Replacement Decals Must be Ordered Separately - See DECALS SECTION.	
1	2080040	16	Fastener, Huck	
2	2600281	2	Hinge	
3	2940074	1	Latch	
4	3520072	3	Plug	
5	3520198	2	Plug	
6	3820020	4	Rivet	
7	1001144629	1	Gate	
8	See Note	NSS	Platform (Note: Not Available - Purchase Platform Assembly)	

FIGURE 5-3. PLATFORM ASSEMBLY - 36IN X 8FT (91.5CM X 2.44M) WITH SWING GATE (USA BUILT MACHINES)

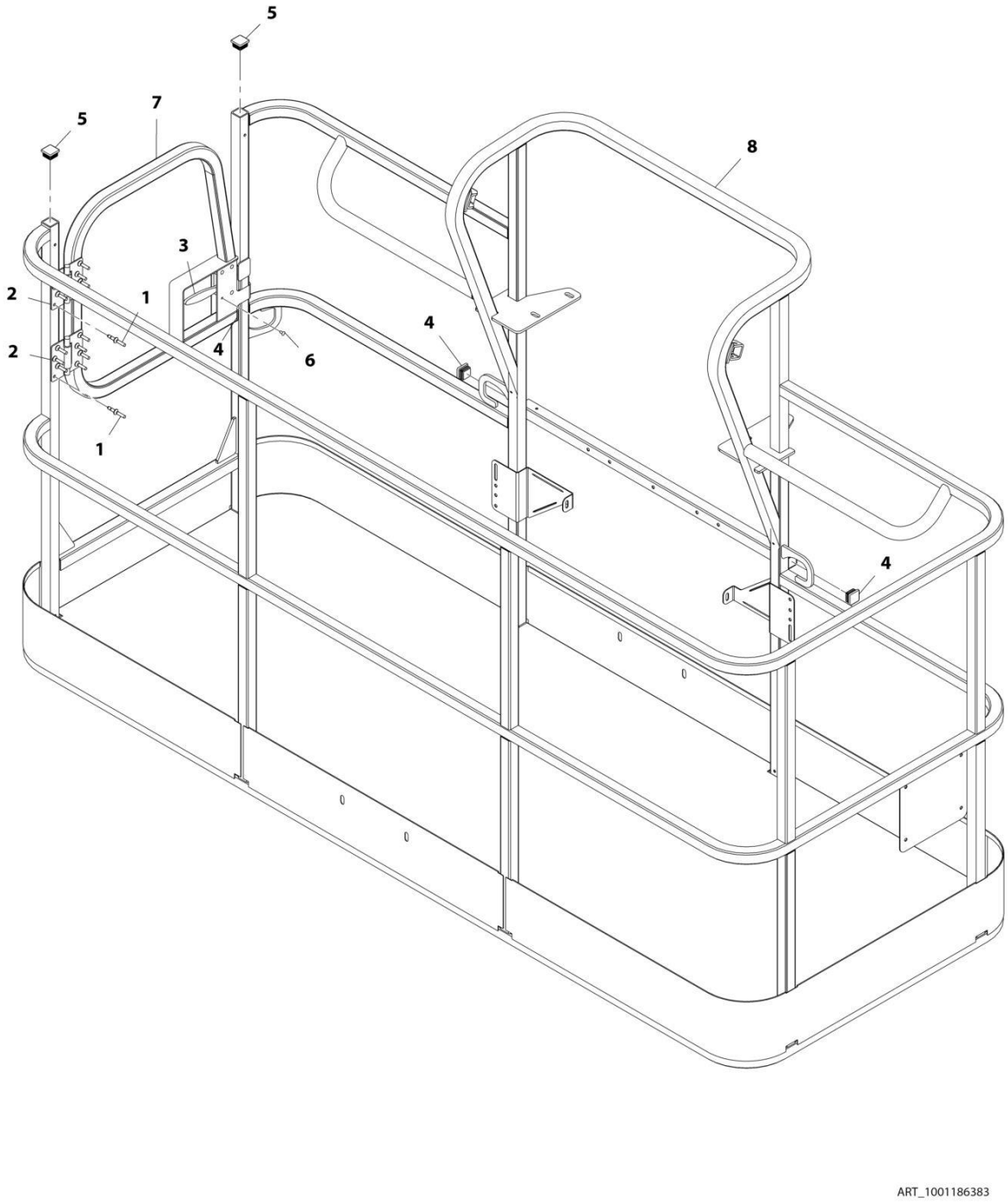

FIGURE 5-3. PLATFORM ASSEMBLY - 36IN X 8FT (91.5CM X 2.44M) WITH SWING GATE (USA BUILT MACHINES)

ITEM	PART NUMBER	QTY	DESCRIPTION	REV
	1001186383	Ref	PLATFORM ASSEMBLY - 36IN X 8FT (91.5CM X 2.44M) WITH SWING GATE (USA BUILT MACHINES)	D
	See Note	Ref	Note: Platform and Mesh must be ordered separately for Platforms with Mesh. See SPECIAL OPTIONS SECTION for Mesh Installations.	
	See Note	Ref	Note: Replacement Decals Must be Ordered Separately - See DECALS SECTION.	
1	2080040	16	Fastener, Huck	
2	2600281	2	Hinge	
3	2940074	1	Latch	
4	3520072	3	Plug	
5	3520198	2	Plug	
6	3820020	4	Rivet	
7	1001144629	1	Gate	
8	See Note	NSS	Platform (Note: Not Available - Purchase Platform Assembly)	

FIGURE 5-4. PLATFORM ASSEMBLY - 30IN X 5FT (76.2CM X 1.52M) WITH DROP BAR (USA BUILT MACHINES)

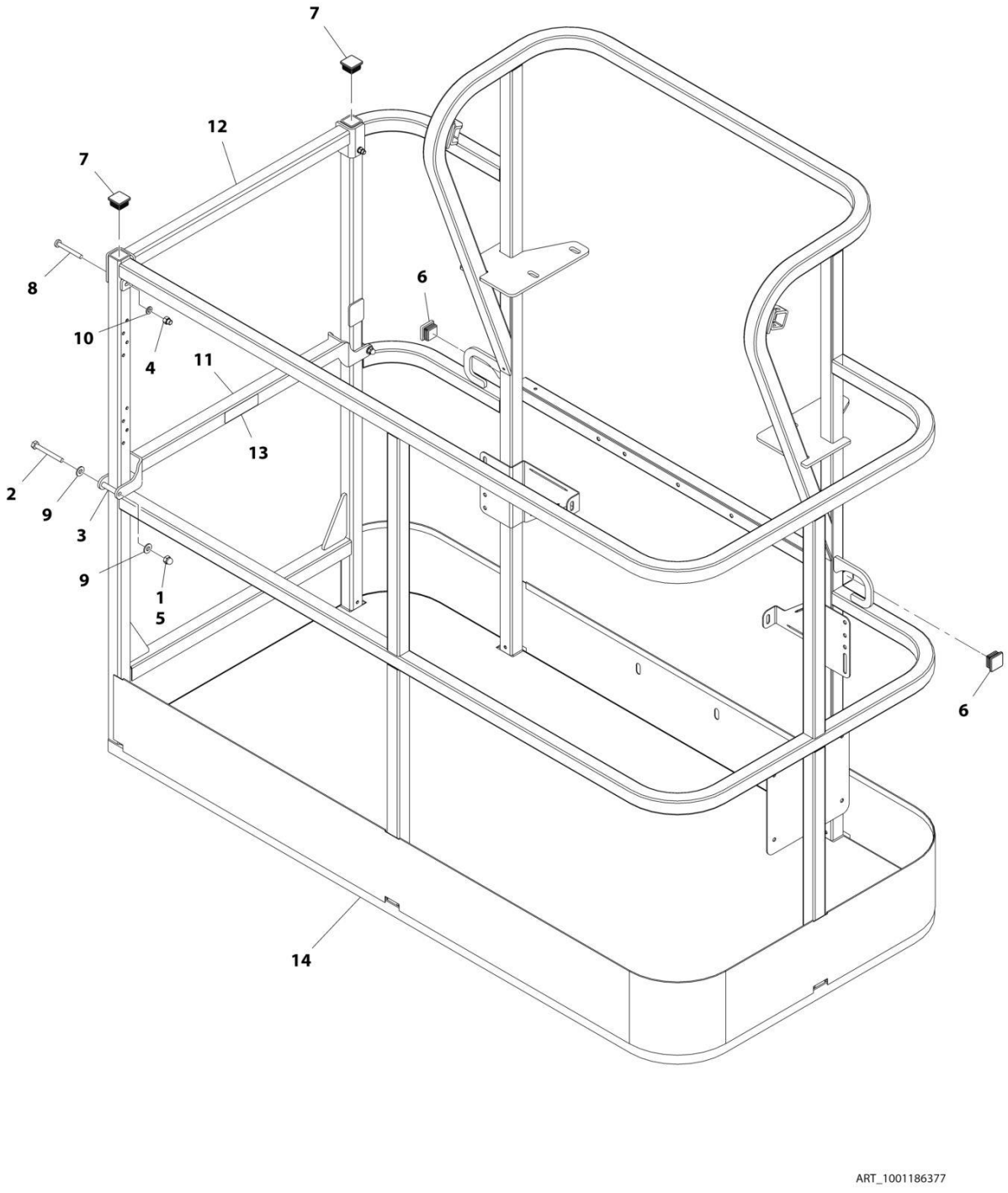

FIGURE 5-4. PLATFORM ASSEMBLY - 30IN X 5FT (76.2CM X 1.52M) WITH DROP BAR (USA BUILT MACHINES)

ITEM	PART NUMBER	QTY	DESCRIPTION	REV
	1001186377	Ref	PLATFORM ASSEMBLY - 30IN X 5FT (76.2CM X 1.52M) WITH DROP BAR (USA BUILT MACHINES)	C
	See Note	Ref	Note: Platform and Mesh must be ordered separately for Platforms with Mesh. See SPECIAL OPTIONS SECTION for Mesh Installations.	
	See Note	Ref	Note: Replacement Decals Must be Ordered Separately - See DECALS SECTION.	
1	0100011	AR	Compound, Locking	
2	0641420	2	Bolt 1/4 x 2-1/2	
3	0961845	2	Bushing	
4	3290606	2	Nut M6	
5	3300151	2	Nut 1/4	
6	3520072	2	Plug	
7	3520198	2	Plug	
8	4010618	2	Screw M6 x 50	
9	4711400	4	Washer 1/4	
10	4811700	2	Washer M6	
11	1001138494	1	Bar, Drop	
12	1001138514	1	Rail (Top)	
13	1001140429	1	Decal - Drop Bar	
14	See Note	NSS	Platform (Note: Use p/n 100186377)	

FIGURE 5-5. PLATFORM ASSEMBLY - 36IN X 6FT (91.5CM X 1.83M) WITH DROP BAR (USA BUILT MACHINES)

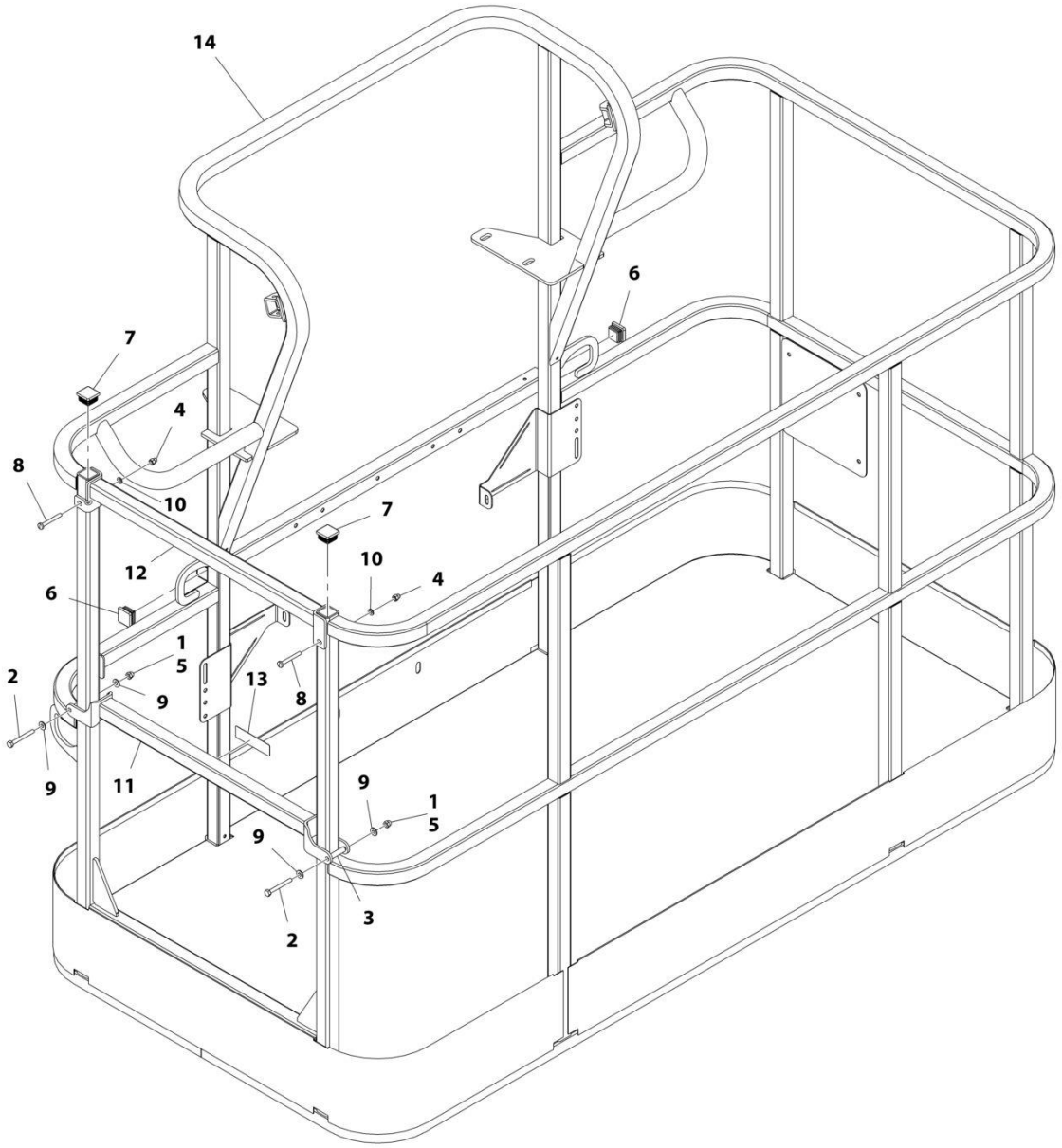

FIGURE 5-5. PLATFORM ASSEMBLY - 36IN X 6FT (91.5CM X 1.83M) WITH DROP BAR (USA BUILT MACHINES)

ITEM	PART NUMBER	QTY	DESCRIPTION	REV
	1001186379	Ref	PLATFORM ASSEMBLY - 36IN X 6FT (91.5CM X 1.83M) WITH DROP BAR (USA BUILT MACHINES)	B
	See Note	Ref	Note: Platform and Mesh must be ordered separately for Platforms with Mesh. See SPECIAL OPTIONS SECTION for Mesh Installations.	
	See Note	Ref	Note: Replacement Decals Must be Ordered Separately - See DECALS SECTION.	
1	0100011	AR	Compound, Locking	
2	0641418	2	Bolt 1/4 x 2-1/4	
3	0961845	2	Bushing	
4	3290606	2	Nut M6	
5	3300151	2	Nut 1/4	
6	3520072	2	Plug	
7	3520198	2	Plug	
8	4010618	2	Screw M6 x 50	
9	4711400	4	Washer 1/4	
10	4811700	2	Washer M6	
11	1001138494	1	Bar, Drop	
12	1001138514	1	Rail (Top)	
13	1001140429	1	Decal - Drop Bar	
14	See Note	NSS	Platform (Note: Not Available - Purchase Platform Assembly)	

FIGURE 5-6. PLATFORM ASSEMBLY - 36IN X 8FT (91.5CM X 2.44M) WITH DROP BAR (USA BUILT MACHINES)

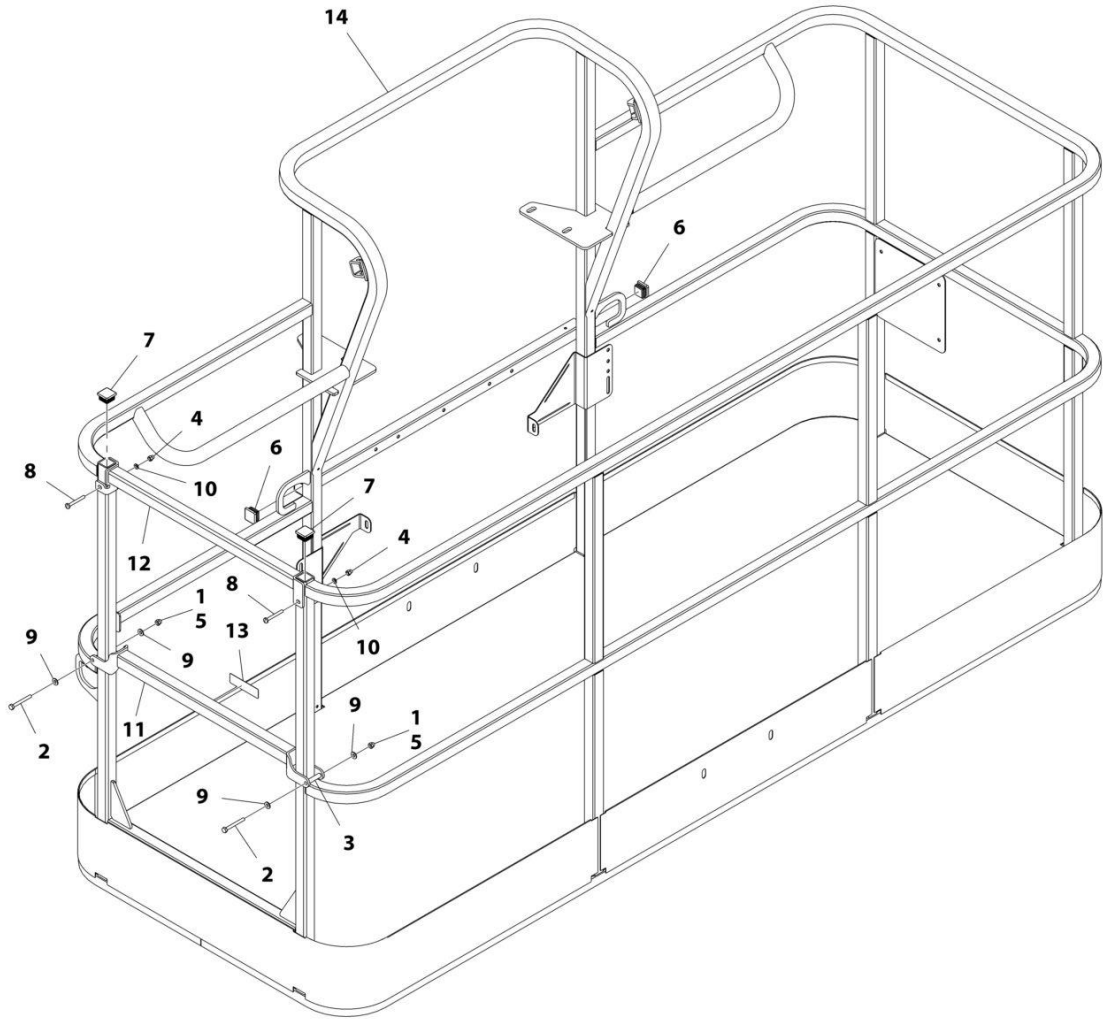

FIGURE 5-6. PLATFORM ASSEMBLY - 36IN X 8FT (91.5CM X 2.44M) WITH DROP BAR (USA BUILT MACHINES)

ITEM	PART NUMBER	QTY	DESCRIPTION	REV
	1001186382	Ref	PLATFORM ASSEMBLY - 36IN X 8FT (91.5CM X 2.44M) WITH DROP BAR (USA BUILT MACHINES)	C
	See Note	Ref	Note: Platform and Mesh must be ordered separately for Platforms with Mesh. See SPECIAL OPTIONS SECTION for Mesh Installations.	
	See Note	Ref	Note: Replacement Decals Must be Ordered Separately - See DECALS SECTION.	
1	0100011	AR	Compound, Locking	
2	0641418	2	Bolt 1/4 x 2-1/4	
3	0961845	2	Bushing	
4	3290606	2	Nut M6	
5	3300151	2	Nut 1/4	
6	3520072	2	Plug	
7	3520198	2	Plug	
8	4010618	2	Screw M6 x 50	
9	4711400	4	Washer 1/4	
10	4811700	2	Washer M6	
11	1001138494	1	Bar, Drop	
12	1001138514	1	Rail (Top)	
13	1001140429	1	Decal - Drop Bar	
14	See Note	NSS	Platform (Note: Not Available - Purchase Platform Assembly)	

FIGURE 5-7. PLATFORM ASSEMBLY - 36IN X 6FT (91.5CM X 1.83M) WITH FALL ARREST (ANSI, ANSI EXPORT AND CHINA SPECS) (USA BUILT MACHINES)

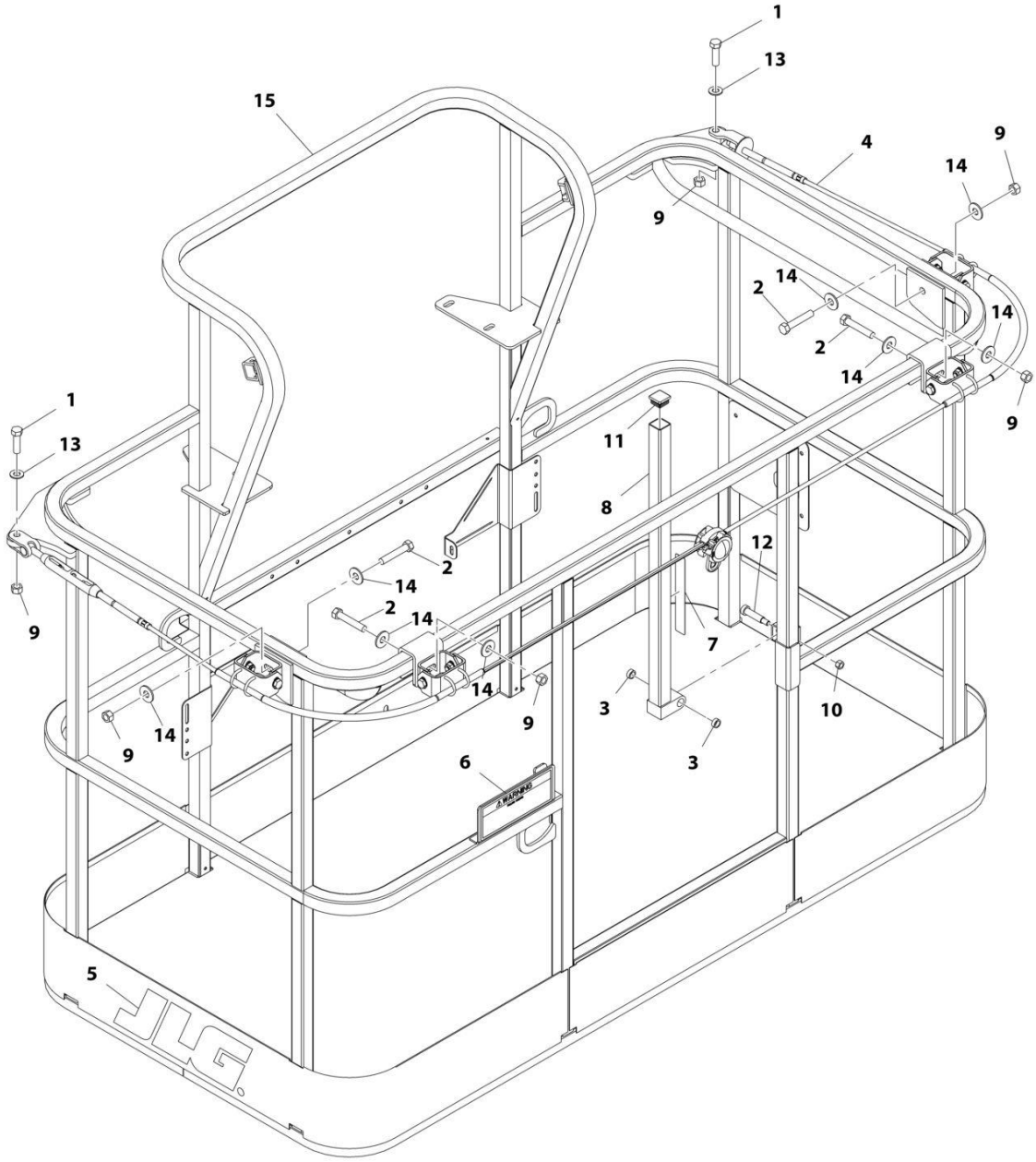

FIGURE 5-7. PLATFORM ASSEMBLY - 36IN X 6FT (91.5CM X 1.83M) WITH FALL ARREST (ANSI, ANSI EXPORT AND CHINA SPECS) (USA BUILT MACHINES)

ITEM	PART NUMBER	QTY	DESCRIPTION	REV
	1001186333	Ref	PLATFORM ASSEMBLY - 36IN X 6FT (91.5CM X 1.83M) WITH FALL ARREST (USA BUILT MACHINES) (ANSI, ANSI EXPORT AND CHINA SPECS)	C
	See Note	Ref	Note: Fall Arrest Not Available on Australian & CE Spec Platform Assembly.	
	See Note	Ref	Note: Replacement Decals Must be Ordered Separately - See DECALS SECTION.	
1	0681814	2	Bolt 1/2 x 1-3/4 Grade 8	
2	0681822	4	Bolt 1/2 x 2-3/4 Grade 8	
3	0962270	2	Bearing	
4	1060919	1	Cable, Fall Arrest	
5	1702773	1	Decal - JLG	
6	1705014	1	Decal - Safety	
7	1706385	1	Decal - Drop Bar	
8	2410014	1	Gate	
9	3271805	6	Nut 1/2 Grade 8	
10	3311605	1	Nut 3/8	
11	3520072	1	Plug	
12	3900054	1	Bolt 1/2 x 1-3/4	
13	4711800	2	Washer 1/2	
14	4751800	8	Washer 1/2	
15	See Note	NSS	Platform (Note: Not Available - Purchase Platform Assembly)	

FIGURE 5-8. PLATFORM ASSEMBLY - 30IN X 5FT (76CM X 1.52M) WITH SWING GATE (ROMANIAN BUILT MACHINES)

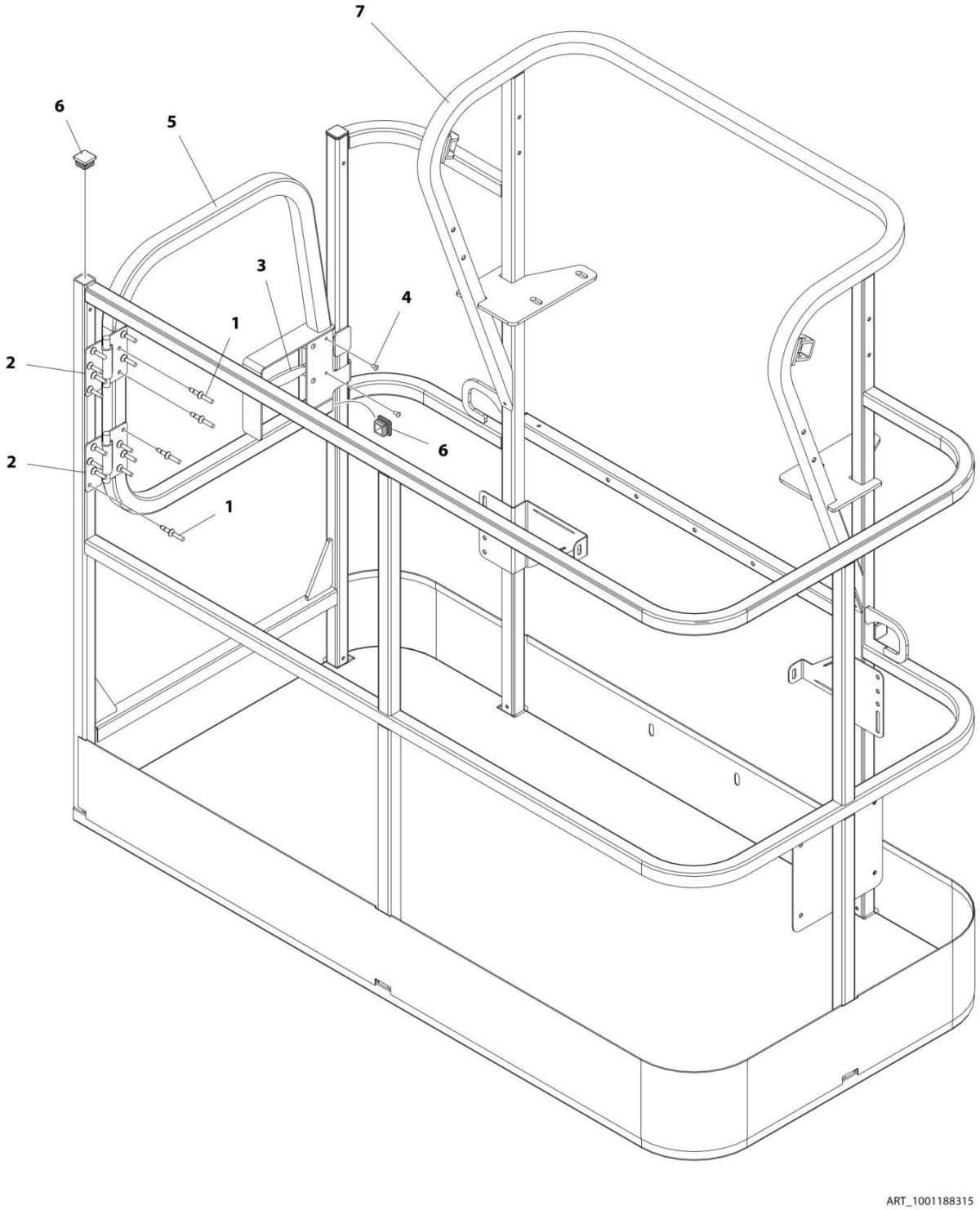

FIGURE 5-8. PLATFORM ASSEMBLY - 30IN X 5FT (76CM X 1.52M) WITH SWING GATE (ROMANIAN BUILT MACHINES)

ITEM	PART NUMBER	QTY	DESCRIPTION	REV
	1001188315	Ref	PLATFORM ASSEMBLY - 30IN X 5FT (76CM X 1.52M) WITH SWING GATE (ROMANIAN BUILT MACHINES)	D
	See Note	Ref	Note: Platform and Mesh must be ordered separately for Platforms with Mesh. See SPECIAL OPTIONS SECTION for Mesh Installations.	
	See Note	Ref	Note: Replacement Decals Must be Ordered Separately - See DECALS SECTION.	
1	2080040	16	Fastener, Huck	
2	2600281	2	Hinge	
3	2940074	1	Latch	
4	3820020	4	Rivet	
5	1001144629	1	Gate	
6	1001145781	5	Plug	
7	See Note	NSS	Platform (Note: Not Available - Purchase Platform Assembly)	

FIGURE 5-9. PLATFORM ASSEMBLY - 36IN X 6FT (92CM X 1.83M) WITH SWING GATE (ROMANIAN BUILT MACHINES)

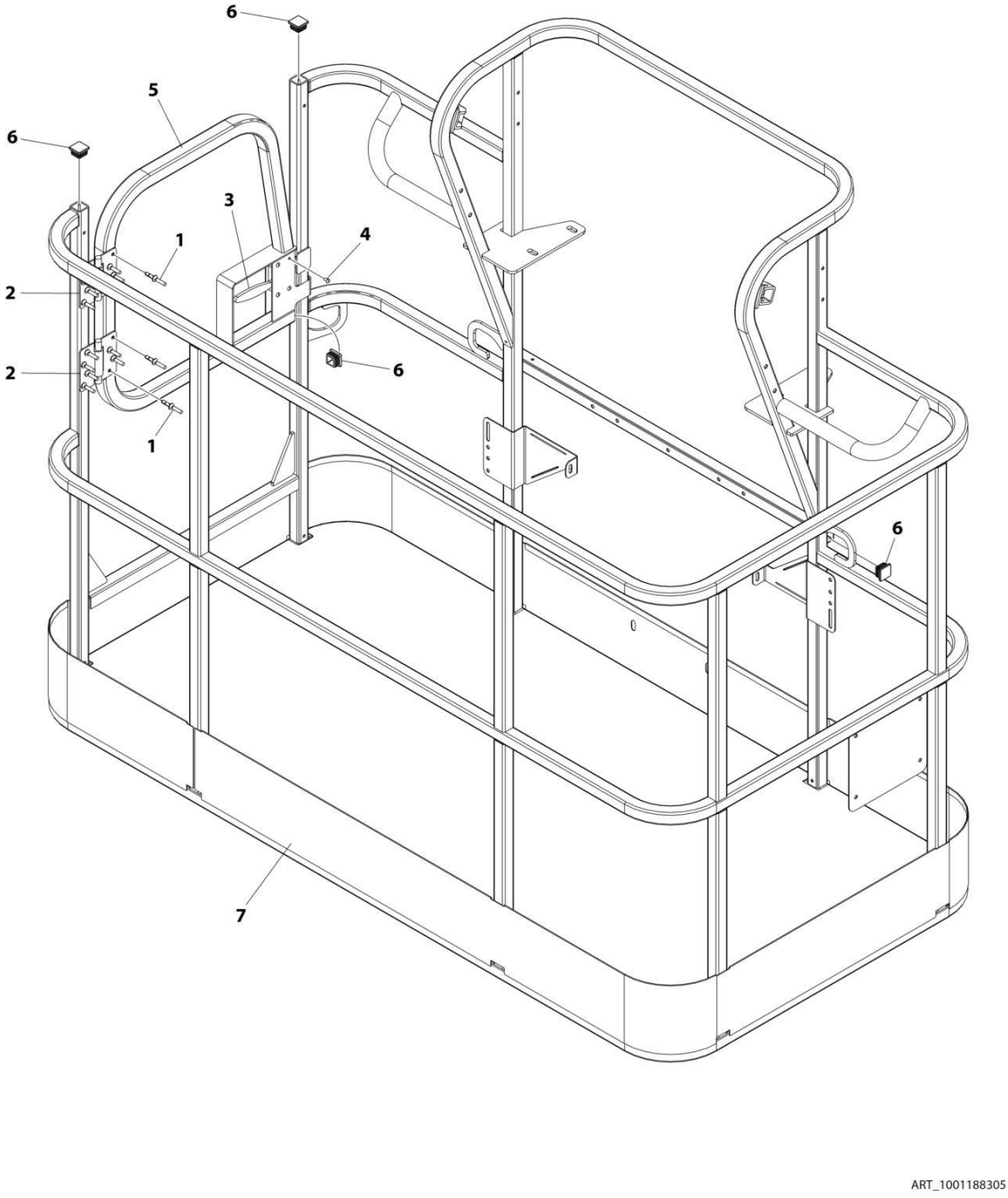

FIGURE 5-9. PLATFORM ASSEMBLY - 36IN X 6FT (92CM X 1.83M) WITH SWING GATE (ROMANIAN BUILT MACHINES)

ITEM	PART NUMBER	QTY	DESCRIPTION	REV
	1001188305	Ref	PLATFORM ASSEMBLY - 36IN X 6FT (91.5CM X 1.83M) WITH SWING GATE (ROMANIAN BUILT MACHINES)	C
	See Note	Ref	Note: Platform and Mesh must be ordered separately for Platforms with Mesh. See SPECIAL OPTIONS SECTION for Mesh Installations.	
	See Note	Ref	Note: Replacement Decals Must be Ordered Separately - See DECALS SECTION.	
1	2080040	16	Fastener, Huck	
2	2600281	2	Hinge	
3	2940074	1	Latch	
4	3820020	4	Rivet	
5	1001144629	1	Gate	
6	1001145781	5	Plug	
7	See Note	NSS	Platform (Note: Not Available - Purchase Platform Assembly)	

FIGURE 5-10. PLATFORM ASSEMBLY - 36IN X 8FT (91.5CM X 2.44M) WITH SWING GATE (ROMANIAN BUILT MACHINES)

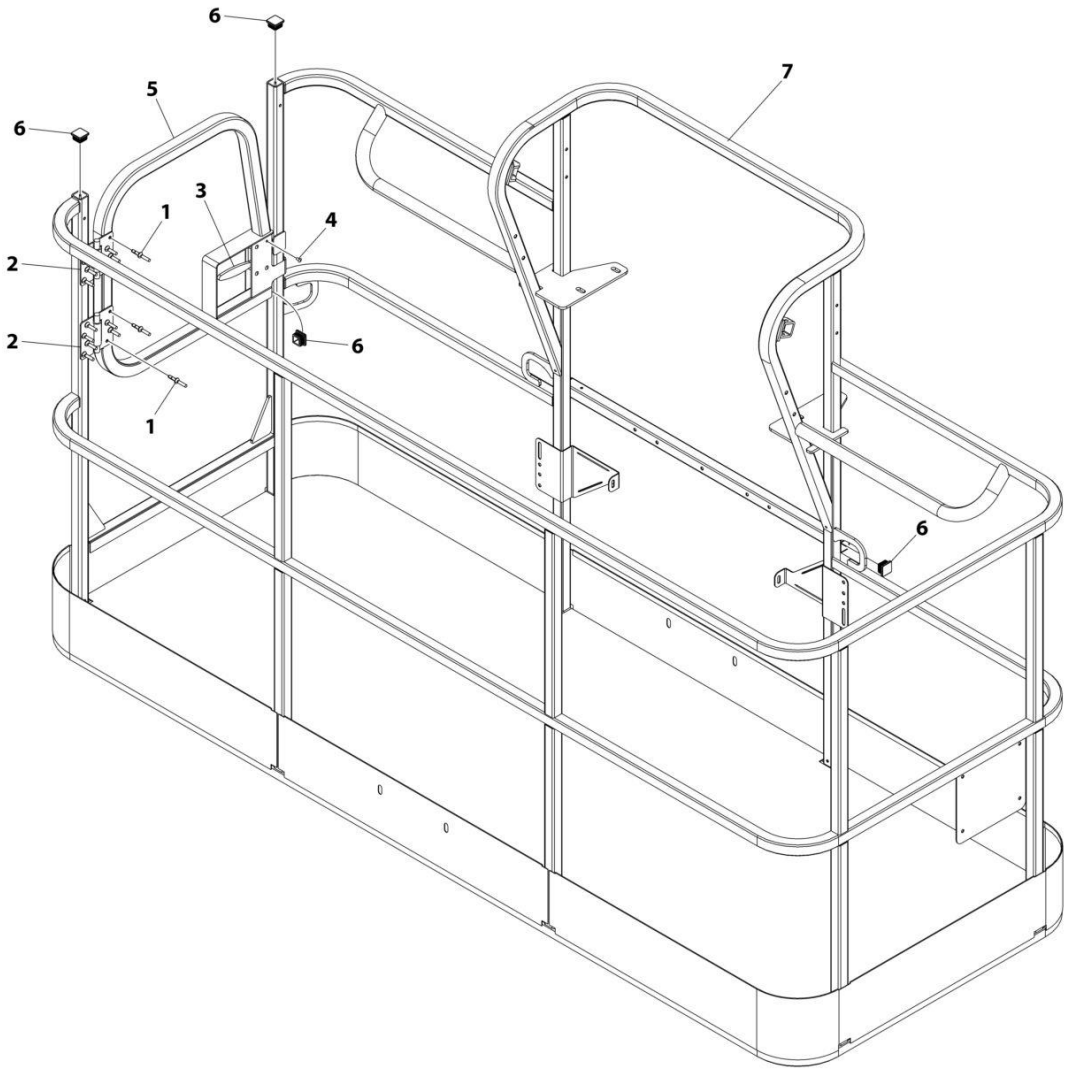

FIGURE 5-10. PLATFORM ASSEMBLY - 36IN X 8FT (91.5CM X 2.44M) WITH SWING GATE (ROMANIAN BUILT MACHINES)

ITEM	PART NUMBER	QTY	DESCRIPTION	REV
	1001188308	Ref	PLATFORM ASSEMBLY - 36IN X 8FT (91.5CM X 2.44M) WITH SWING GATE (ROMANIAN BUILT MACHINES)	C
	See Note	Ref	Note: Platform and Mesh must be ordered separately for Platforms with Mesh. See SPECIAL OPTIONS SECTION for Mesh Installations.	
	See Note	Ref	Note: Replacement Decals Must be Ordered Separately - See DECALS SECTION.	
1	2080040	16	Fastener, Huck	
2	2600281	2	Hinge	
3	2940074	1	Latch	
4	3820020	4	Rivet	
5	1001144629	1	Gate	
6	1001145781	5	Plug	
7	See Note	NSS	Platform (Note: Not Available - Purchase Platform Assembly)	

FIGURE 5-11. PLATFORM ASSEMBLY - 36IN X 8FT (91.5CM X 2.44M) WITH DROP BAR (ROMANIAN BUILT MACHINES)

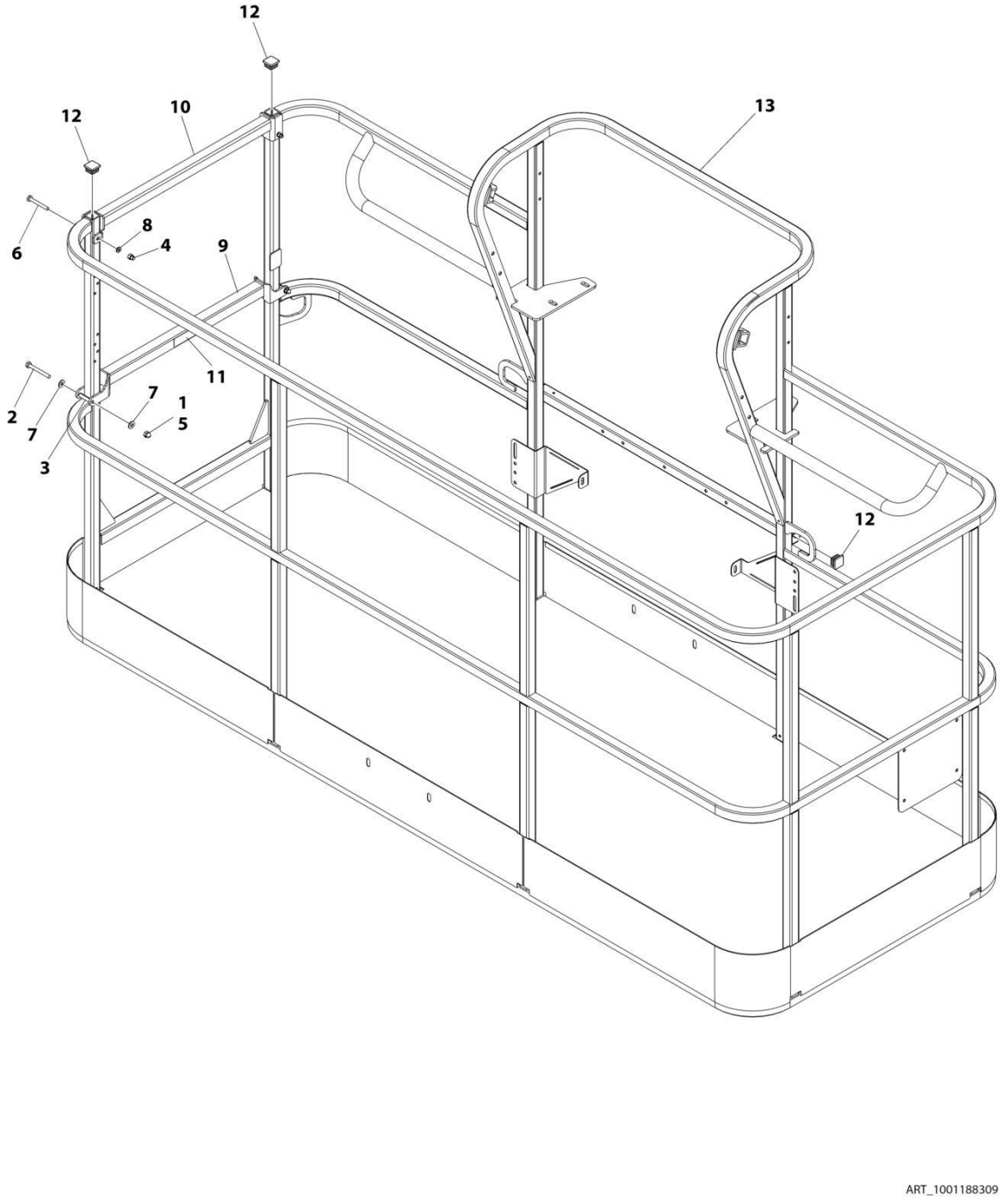

FIGURE 5-11. PLATFORM ASSEMBLY - 36IN X 8FT (91.5CM X 2.44M) WITH DROP BAR (ROMANIAN BUILT MACHINES)

ITEM	PART NUMBER	QTY	DESCRIPTION	REV
	1001188309	Ref	PLATFORM ASSEMBLY - 36IN X 8FT (91.5CM X 2.44M) WITH DROP BAR (ROMANIAN BUILT MACHINES)	B
	See Note	Ref	Note: Platform and Mesh must be ordered separately for Platforms with Mesh. See SPECIAL OPTIONS SECTION for Mesh Installations.	
	See Note	Ref	Note: Replacement Decals Must be Ordered Separately - See DECALS SECTION.	
1	0100011	AR	Compound, Locking	
2	0641418	2	Bolt 1/4 x 2-1/4	
3	0961845	2	Bushing	
4	3290606	2	Nut M6	
5	3300151	2	Nut 1/4	
6	4010618	2	Screw M6 x 50	
7	4711400	4	Washer 1/4	
8	4811700	2	Washer M6	
9	1001138494	1	Bar, Drop	
10	1001138514	1	Rail (Top)	
11	1001140429	1	Decal - Drop Bar	
12	1001145781	4	Plug	
13	See Note	NSS	Platform (Note: Not Available - Purchase Platform Assembly)	

FIGURE 5-12. PLATFORM ASSEMBLY - 30IN X 5FT (76CM X 1.52M) WITH DROP BAR (ROMANIAN BUILT MACHINES)

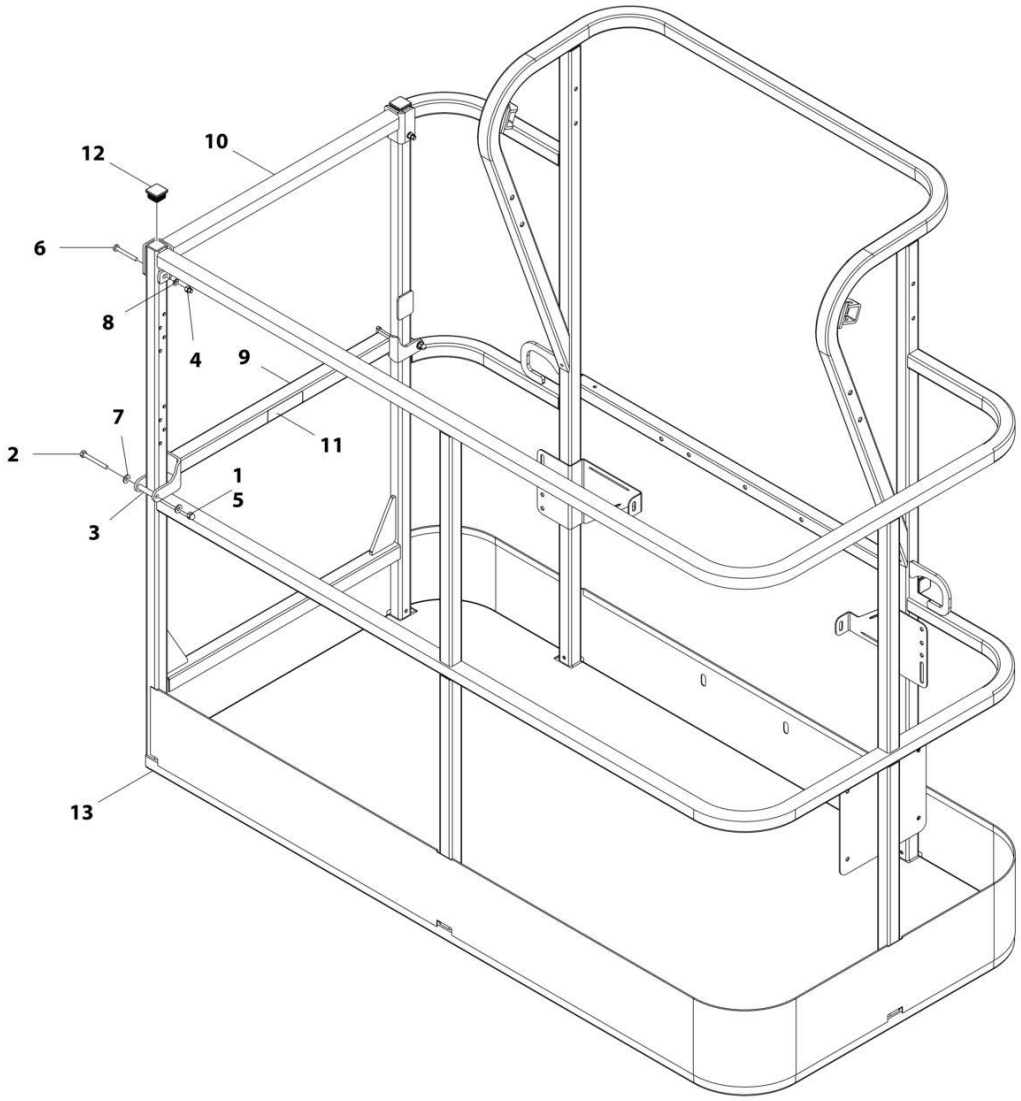

FIGURE 5-12. PLATFORM ASSEMBLY - 30IN X 5FT (76CM X 1.52M) WITH DROP BAR (ROMANIAN BUILT MACHINES)

ITEM	PART NUMBER	QTY	DESCRIPTION	REV
	1001188314	Ref	PLATFORM ASSEMBLY – 30IN X 5FT (76CM X 1.52M) WITH DROP BAR (ROMANIAN BUILT MACHINES)	B
	See Note	Ref	Note: Platform and Mesh must be ordered separately for Platforms with Mesh. See SPECIAL OPTIONS SECTION for Mesh Installations.	
	See Note	Ref	Note: Replacement Decals Must be Ordered Separately - See DECALS SECTION.	
1	0100011	AR	Compound, Locking	
2	0641418	2	Bolt 1/4 x 2-1/4	
3	0961845	2	Bushing	
4	3290606	2	Nut M6	
5	3300151	2	Nut 1/4	
6	4010618	2	Screw M6 x 50	
7	4711400	4	Washer 1/4	
8	4811700	2	Washer M6	
9	1001138494	1	Bar, Drop	
10	1001138514	1	Rail (Top)	
11	1001140429	1	Decal - Drop Bar	
12	1001145781	4	Plug	
13	See Note	NSS	Platform (Note: Not Available - Purchase Platform Assembly)	

FIGURE 5-13. PLATFORM ASSEMBLY - 36IN X 6FT (91.5CM X 1.83M) WITH DROP BAR (ROMANIAN BUILT MACHINES)

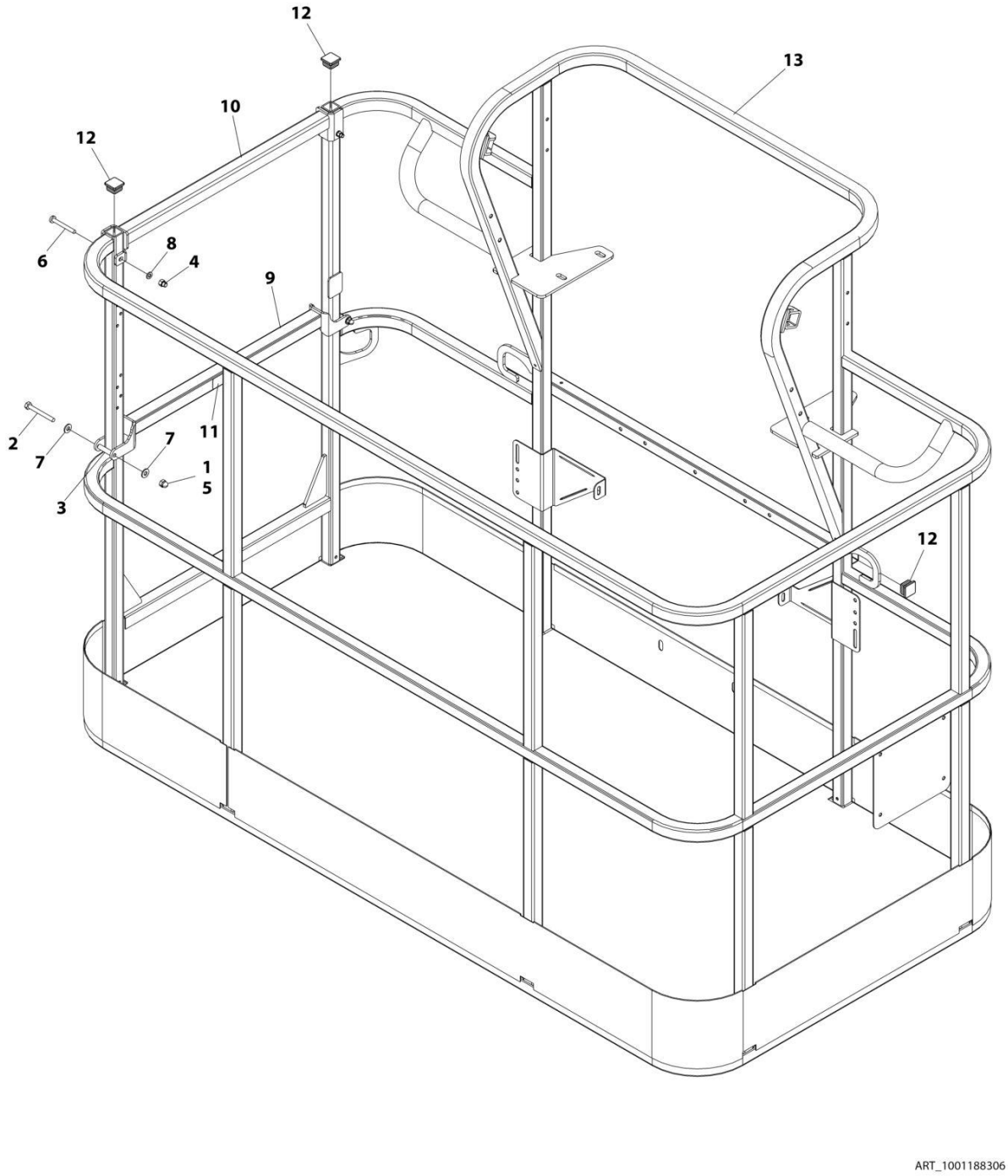

FIGURE 5-13. PLATFORM ASSEMBLY - 36IN X 6FT (91.5CM X 1.83M) WITH DROP BAR (ROMANIAN BUILT MACHINES)

ITEM	PART NUMBER	QTY	DESCRIPTION	REV
	1001188306	Ref	PLATFORM ASSEMBLY - 36IN X 6FT (91.5CM X 1.83M) WITH DROP BAR (ROMANIAN BUILT MACHINES)	B
	See Note	Ref	Note: Platform and Mesh must be ordered separately for Platforms with Mesh. See SPECIAL OPTIONS SECTION for Mesh Installations.	
	See Note	Ref	Note: Replacement Decals Must be Ordered Separately - See DECALS SECTION.	
1	0100011	AR	Compound, Locking	
2	0641418	2	Bolt 1/4 x 2-1/4	
3	0961845	2	Bushing	
4	3290606	2	Nut M6	
5	3300151	2	Nut 1/4	
6	4010618	2	Screw M6 x 50	
7	4711400	4	Washer 1/4	
8	4811700	2	Washer M6	
9	1001138494	1	Bar, Drop	
10	1001138514	1	Rail (Top)	
11	1001140429	1	Decal - Drop Bar	
12	1001145781	4	Plug	
13	See Note	NSS	Platform (Note: Not Available - Purchase Platform Assembly)	

SECTION 5 - PLATFORM

FIGURE 5-14. PLATFORM ASSEMBLY - 36IN X 6FT (91.5CM X 1.83M) TRI-ENTRY WITH GATE

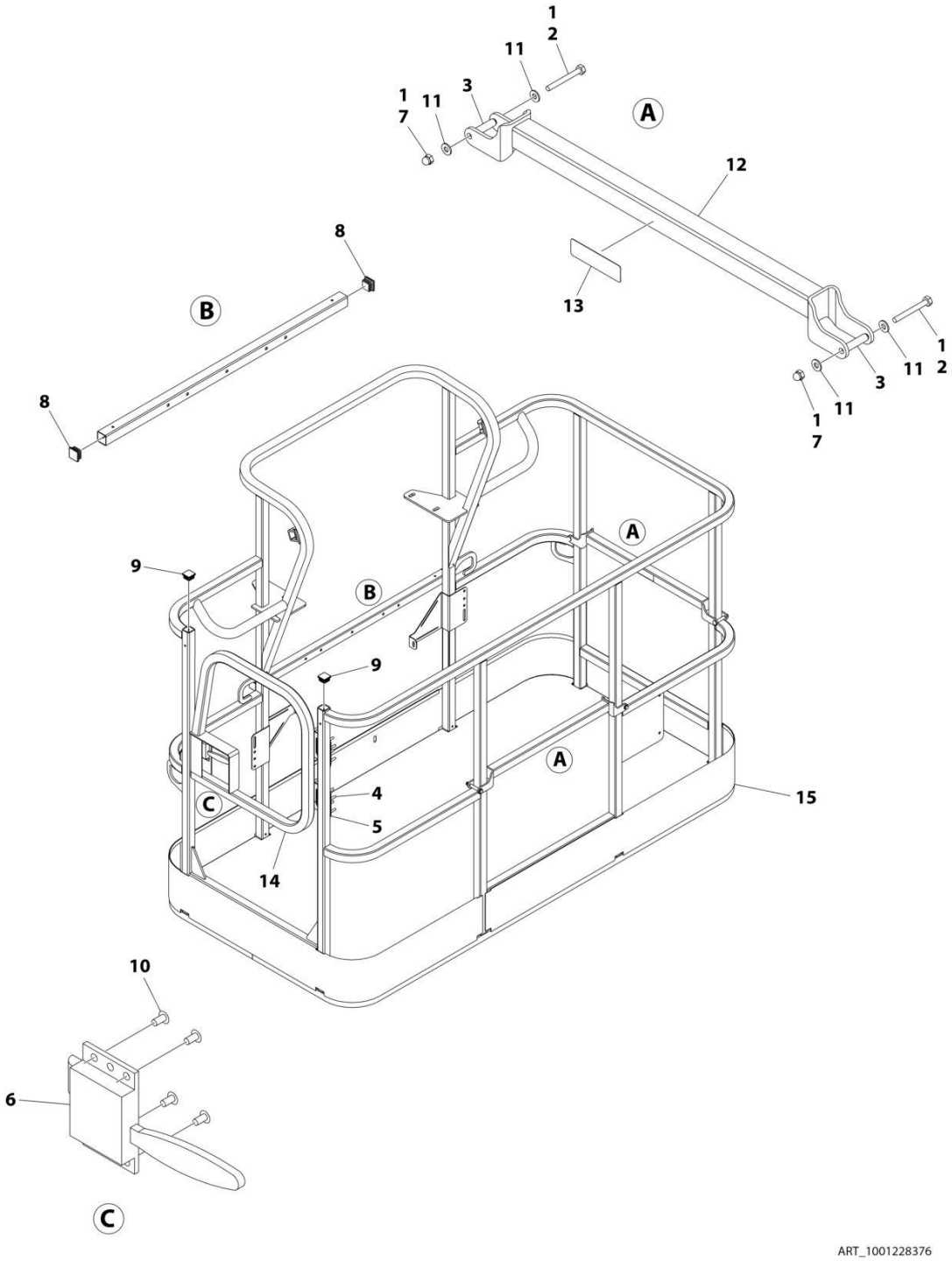

FIGURE 5-14. PLATFORM ASSEMBLY - 36IN X 6FT (91.5CM X 1.83M) TRI-ENTRY WITH GATE

ITEM	PART NUMBER	QTY	DESCRIPTION	REV
	1001228376	Ref	PLATFORM ASSEMBLY - 36IN x 6FT (91.5CM x 1.83M)	B
		Ref	Note: Platform and Mesh must be ordered separately for Platforms with Mesh. See SPECIAL OPTIONS SECTION for Mesh Installations.	
		Ref	Note: Replacement Decals Must be Ordered Separately - See DECAL SECTION.	
1	0100011	AR	Compound, Locking	
2	0641418	4	Bolt 1/4 x 2-1/4	
3	0961845	4	Bushing	
4	2080040	16	Fastener	
5	2600281	2	Hinge	
6	2940074	1	Latch	
7	3300151	4	Nut 1/4	
8	3520072	3	Plug	
9	3520198	2	Plug	
10	3820020	4	Rivet	
11	4711400	8	Washer 1/4	
12	1001138494	2	Bar, Drop	
13	1001140429	2	Decal - Drop Bar	
14	1001144629	1	Gate	
15	See Note	NSS	Platform (Note: Not Available - Purchase Platform Assembly)	

SECTION 5 - PLATFORM

FIGURE 5-15. PLATFORM ASSEMBLY - 36IN X 6FT (91.5CM X 1.83M) TRI-ENTRY WITH DROPBAR

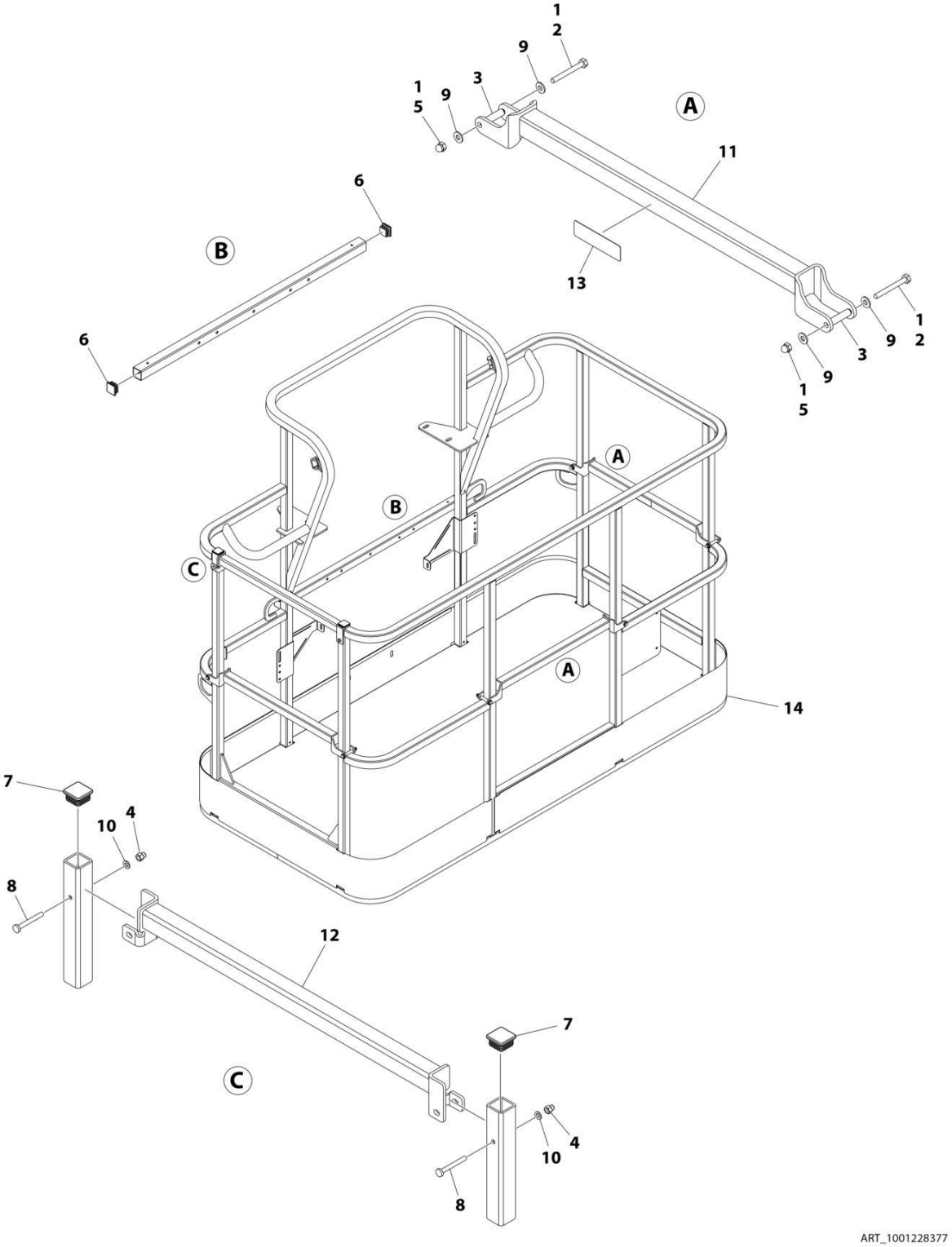

FIGURE 5-15. PLATFORM ASSEMBLY - 36IN X 6FT (91.5CM X 1.83M) TRI-ENTRY WITH DROPBAR

ITEM	PART NUMBER	QTY	DESCRIPTION	REV
	1001228377	Ref	PLATFORM ASSEMBLY - 36IN x 6FT (91.5CM x 1.83M)	B
		Ref	Note: Platform and Mesh must be ordered separately for Platforms with Mesh. See SPECIAL OPTIONS SECTION for Mesh Installations.	
		Ref	Note: Replacement Decals Must be Ordered Separately - See DECAL SECTION.	
1	0100011	1	Compound, Locking	
2	0641418	6	Bolt 1/4 x 2-1/4	
3	0961845	6	Bushing	
4	3290606	2	Nut M6	
5	3300151	6	Nut 1/4	
6	3520072	2	Plug	
7	3520198	2	Plug	
8	4010618	2	Screw M6 x 50	
9	4711400	12	Washer 1/4	
10	4811700	2	Washer M6	
11	1001138494	3	Bar, Drop	
12	1001138514	1	Rail (Top)	
13	1001140429	3	Decal - Drop Bar	
14	See Note	NSS	Platform, Weldment (Note: Not Available - Purchase Platform Assembly)	

FIGURE 5-16. PLATFORM ASSEMBLY - 36IN X 8FT (91.5CM X 2.44M) WITH TRI-ENTRY (1 GATE/2 DROP BARS)

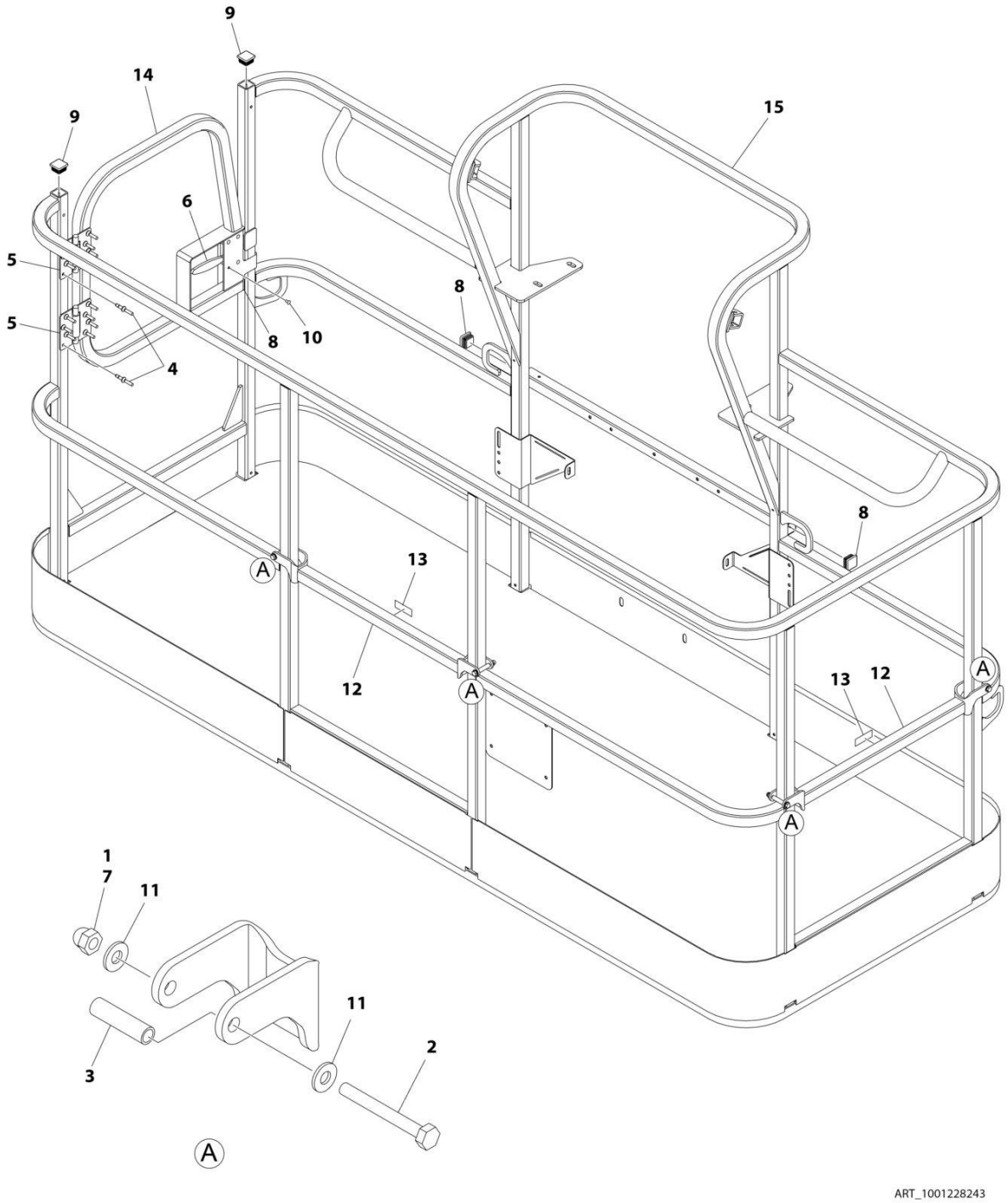

FIGURE 5-16. PLATFORM ASSEMBLY - 36IN X 8FT (91.5CM X 2.44M) WITH TRI-ENTRY (1 GATE/2 DROP BARS)

ITEM	PART NUMBER	QTY	DESCRIPTION	REV
	1001228243	Ref	PLATFORM ASSEMBLY - 36IN X 8FT (91.5CM X 2.44M) WITH TRI-ENTRY	A
		Ref	Note: Platform and Mesh must be ordered separately for Platforms with Mesh. See SPECIAL OPTIONS SECTION for Mesh Installations.	
1	0100011	AR	Compound, Locking	
2	0641418	4	Bolt 1/4 x 2-1/4	
3	0961845	4	Bushing	
4	2080040	16	Fastener, Huck	
5	2600281	2	Hinge, Self-Closing	
6	2940074	1	Latch	
7	3300151	4	Nut 1/4	
8	3520072	3	Cap, Plug	
9	3520198	2	Cap, Plug	
10	3820020	4	Rivet	
11	4711400	8	Washer 1/4	
12	1001138494	2	Bar, Drop	
13	1001140429	2	Decal - Drop Bar	
14	1001144629	1	Gate, Weldment	
15	See Note	1	Platform (Note: Not Available - Purchase Platform Assembly)	

SECTION 5 - PLATFORM

FIGURE 5-17. PLATFORM ASSEMBLY - 36IN X 8FT (91.5CM X 2.44M) WITH TRI-ENTRY (3 DROP BARS)

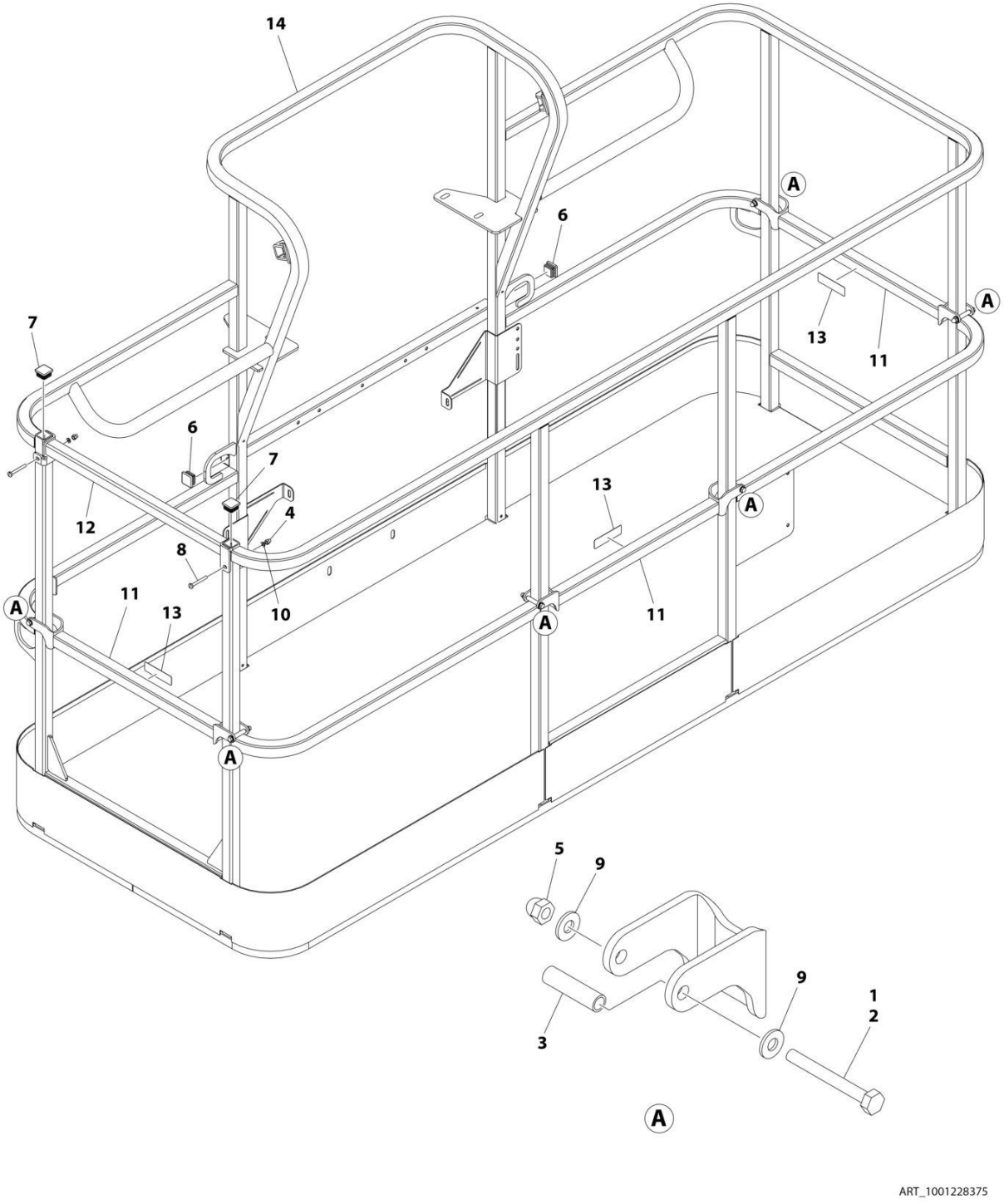

FIGURE 5-17. PLATFORM ASSEMBLY - 36IN X 8FT (91.5CM X 2.44M) WITH TRI-ENTRY (3 DROP BARS)

ITEM	PART NUMBER	QTY	DESCRIPTION	REV
	1001228375	Ref	PLATFORM ASSEMBLY - 36IN X 8FT (91.5CM X 2.44M) WITH TRI-ENTRY	A
		Ref	Note: Platform and Mesh must be ordered separately for Platforms with Mesh. See SPECIAL OPTIONS SECTION for Mesh Installations.	
		Ref	Note: Replacement Decals Must be Ordered Separately - See DECAL SECTION.	
1	0100011	AR	Compound, Locking	
2	0641418	6	Bolt 1/4 x 2-1/4	
3	0961845	6	Bushing	
4	3290606	2	Nut M6 x 1	
5	3300151	6	Nut 1/4	
6	3520072	2	Cap, Plug	
7	3520198	2	Cap, Plug	
8	4010618	2	Screw M6 x 50	
9	4711400	12	Washer 1/4	
10	4811700	2	Washer M6	
11	1001138494	3	Bar, Drop	
12	1001138514	1	Rail (Top)	
13	1001140429	3	Decal - Drop Bar	
14	See Note	1	Platform (Note: Not Available - Purchase Platform Assembly)	

FIGURE 5-18. PLATFORM ASSEMBLY - 30IN X 3FT (76CM X .91M) - DROP BAR ENTRY

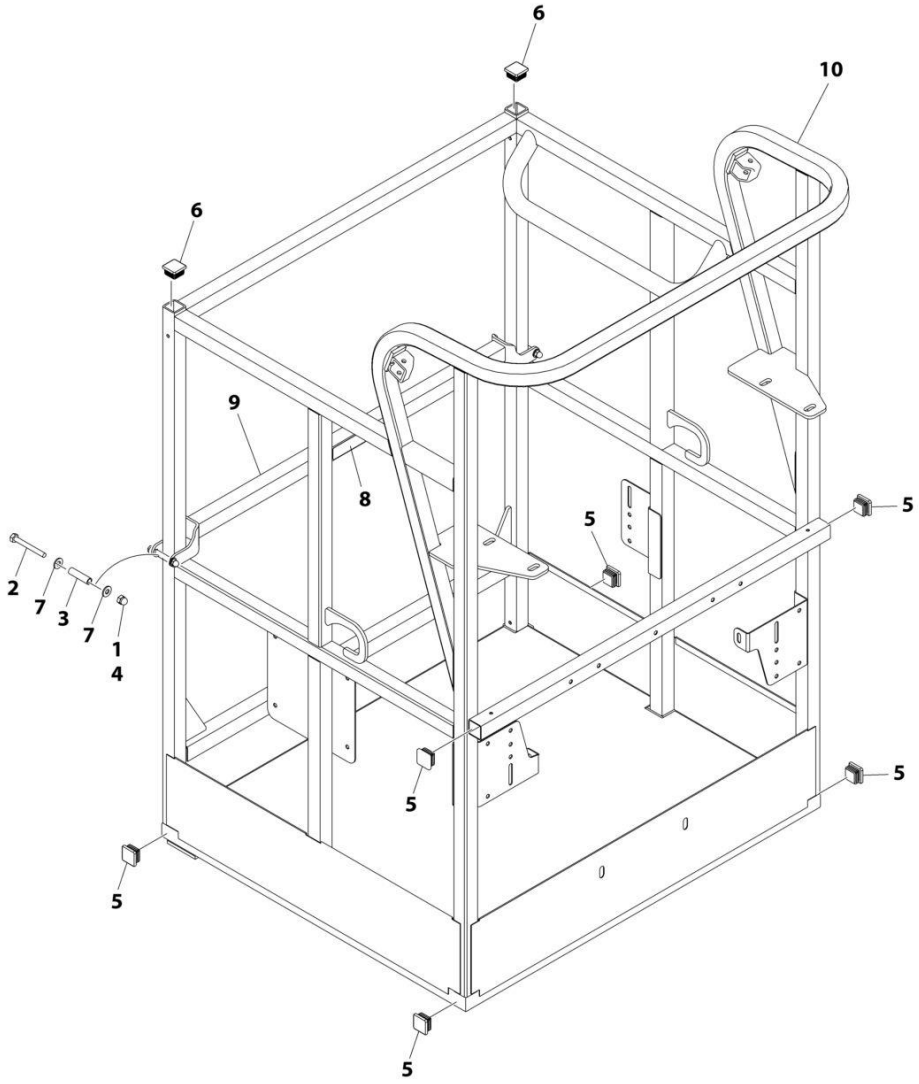

FIGURE 5-18. PLATFORM ASSEMBLY - 30IN X 3FT (76CM X .91M) - DROP BAR ENTRY

ITEM	PART NUMBER	QTY	DESCRIPTION	REV
	1001228215	Ref	PLATFORM ASSEMBLY	A
	See Note	Ref	Note: Platform and Mesh must be ordered separately for Platforms with Mesh. See SPECIAL OPTIONS SECTION for Mesh Installations.	
	See Note	Ref	Note: Replacement Decals Must be Ordered Separately - See DECAL SECTION.	
1	0100011	AR	Compound, Locking	
2	0641418	2	Bolt 1/4 x 2-1/4	
3	0961845	2	Bushing	
4	3300151	2	Nut 1/4	
5	3520072	6	Cap, Plug	
6	3520198	2	Cap, Plug	
7	4711400	4	Washer 1/4	
8	1001140429	1	Decal - Drop Bar	
9	1001226872	1	Bar, Drop	
10	See Note	NSS	Platform (Note: Not Available - Purchase Platform Assembly)	

FIGURE 5-19. CONSOLE BOX INSTALLATION - WITHOUT SKYGUARD

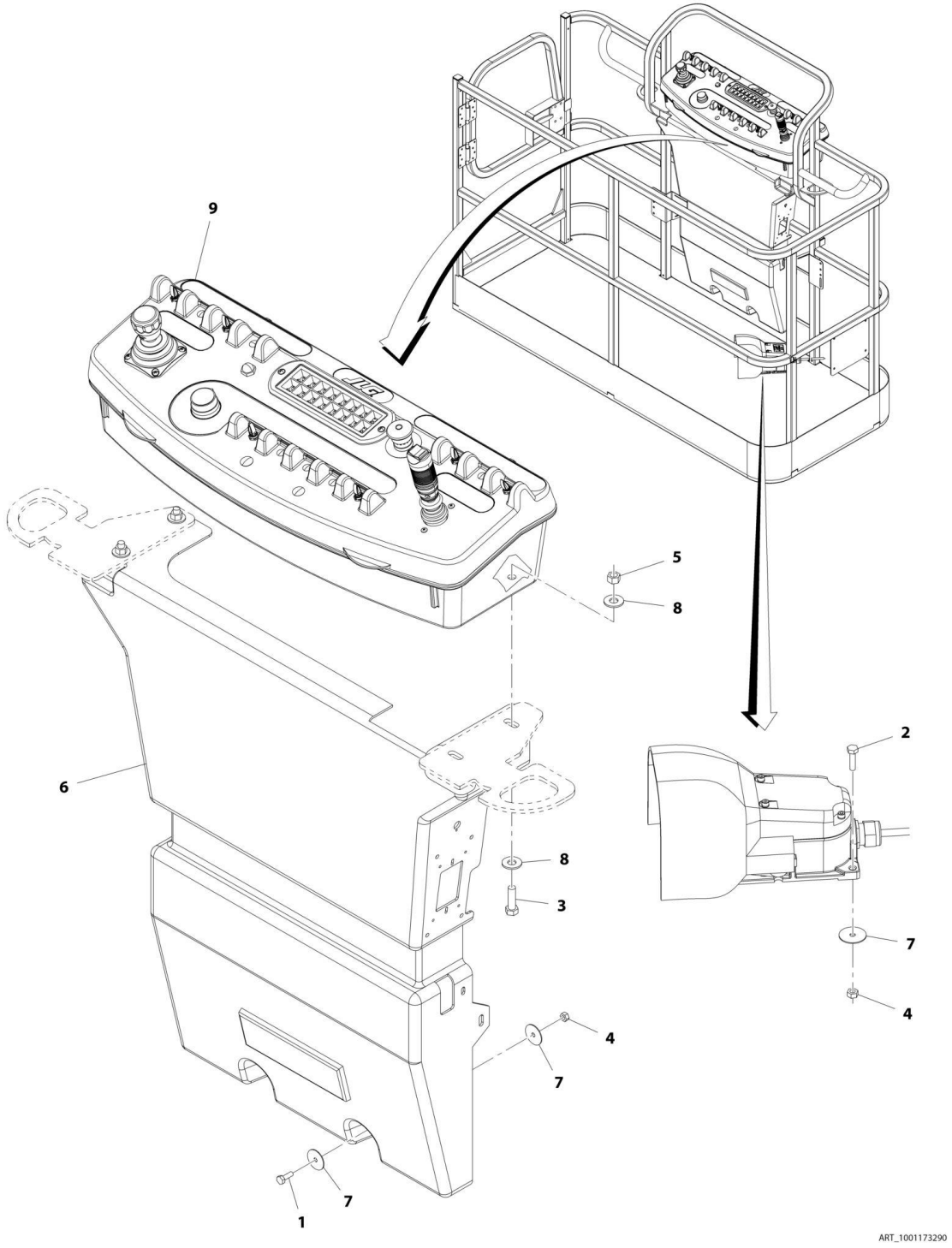

FIGURE 5-19. CONSOLE BOX INSTALLATION - WITHOUT SKYGUARD

ITEM	PART NUMBER	QTY	DESCRIPTION	REV
	1001173290	Ref	CONSOLE BOX INSTALLATION - WITHOUT SKYGUARD	B
1	0641406	2	Bolt, 1/4 x 3/4	
2	0641408	3	Bolt, 1/4 x 1	
3	0641610	4	Bolt, 3/8 x 1-1/4	
4	3311405	5	Nut, Lock 1/4	
5	3311605	4	Nut, Lock 3/8	
6	3380434	1	Panel, Decal Mount	
7	4740362	7	Washer, 1/4	
8	4751600	8	Washer, 3/8	
9	1001173289	1	Platform Console Box Assembly (See CONSOLE BOX ASSEMBLY - WITHOUT SKYGUARD for Breakdown) **(SN 0300203771 through 0300220006)**	
9	1001202591	1	Platform Console Box Assembly (See CONSOLE BOX ASSEMBLY - WITHOUT SKYGUARD for Breakdown) **(SN 0300220007 through 0300272360, SN E300000100 through E300007988, SN 1300007289 through 1300007393, Except SN 0300272174 through 0300272184, Excluding E300007847)**	

FIGURE 5-20. CONSOLE BOX INSTALLATION - WITH SKYGUARD (SN 0300203771 through 0300259126, SN E300000100 through E300007988)

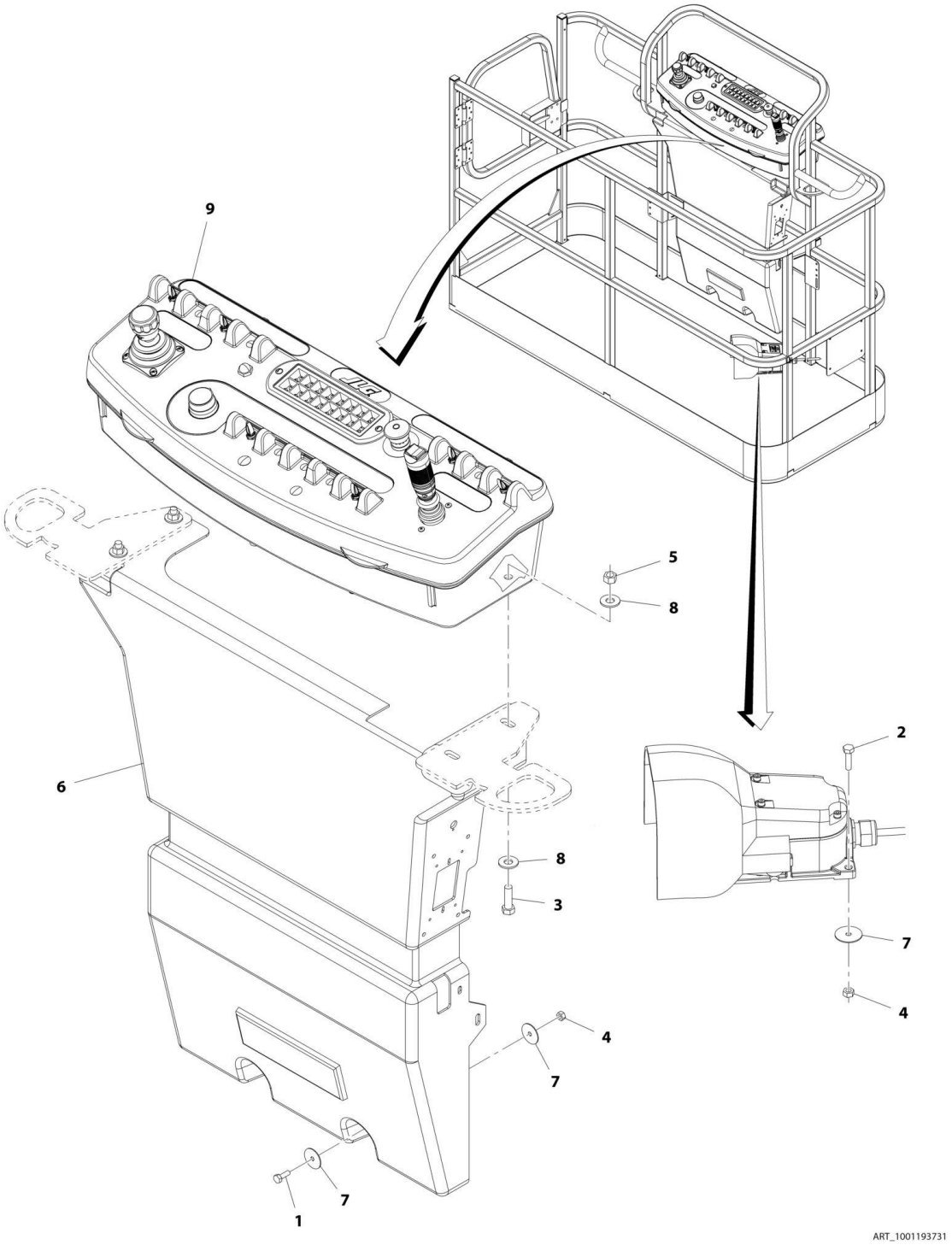

FIGURE 5-20. CONSOLE BOX INSTALLATION - WITH SKYGUARD (SN 0300203771 through 0300259126, SN E300000100 through E300007988)

ITEM	PART NUMBER	QTY	DESCRIPTION	REV
	1001193731	Ref	CONSOLE BOX INSTALLATION - WITH SKYGUARD	B
1	0641406	2	Bolt, 1/4 x 3/4	
2	0641408	3	Bolt, 1/4 x 1	
3	0641610	4	Bolt, 3/8 x 1-1/4	
4	3311405	5	Nut, Lock 1/4	
5	3311605	4	Nut, Lock 3/8	
6	3380434	1	Panel, Decal Mount	
7	4740362	7	Washer, 1/4	
8	4751600	8	Washer, 3/8	
9	1001193732	NLA	Platform Console Box Assembly (Use p/n 1001242845) (See CONSOLE BOX ASSEMBLY - WITH SKYGUARD for Breakdown) **(SN 0300203771 through 0300220006)**	
9	1001202557	NLA	Platform Console Box Assembly (Use p/n 1001242845) (See CONSOLE BOX ASSEMBLY - WITH SKYGUARD for Breakdown) **(SN 0300220007 through 0300259126, SN E300000100 through E300007988, SN 1300007289 through 1300007393, Excluding E300007847)**	

FIGURE 5-21. CONSOLE BOX INSTALLATION - WITH SKYGUARD (SN 0300259127 through 0300272360)

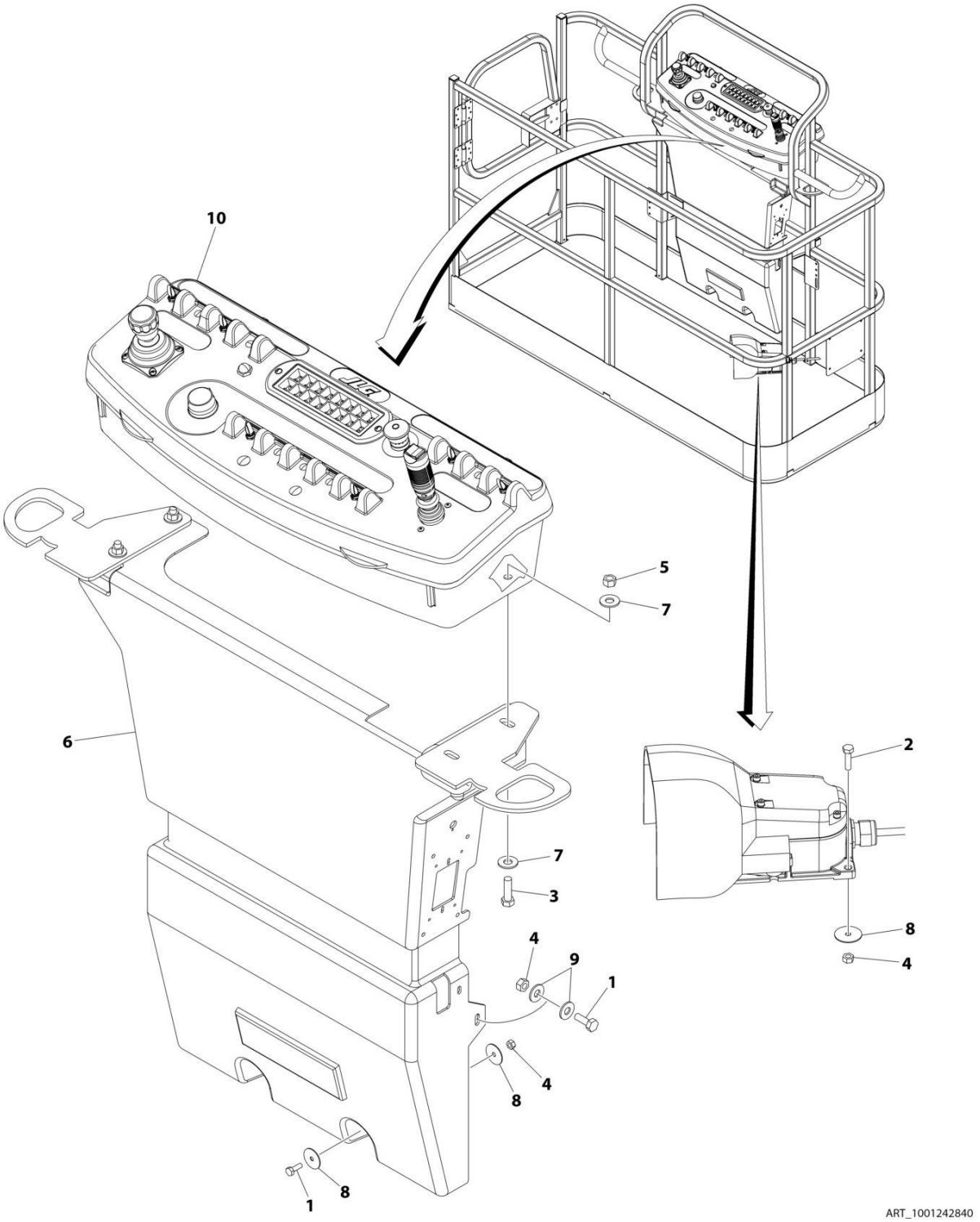

FIGURE 5-21. CONSOLE BOX INSTALLATION - WITH SKYGUARD (SN 0300259127 through 0300272360)

ITEM	PART NUMBER	QTY	DESCRIPTION	REV
	1001242840	Ref	CONSOLE BOX INSTALLATION - WITH SKYGUARD	A
1	0641406	4	Bolt, 1/4 x 3/4	
2	0641408	3	Bolt, 1/4 x 1	
3	0641610	4	Bolt, 3/8 x 1-1/4	
4	3311405	7	Nut, Lock 1/4	
5	3311605	4	Nut, Lock 3/8	
6	3380434	1	Panel, Decal Mount	
7	4711600	8	Washer, 3/8	
8	4740362	7	Washer, 1/4	
9	4751400	4	Washer, 1/4	
10	1001242845	1	Platform Console Box Assembly (See Separate Breakdown in this Section)	

FIGURE 5-22. CONSOLE BOX ASSEMBLY - WITHOUT SKYGUARD (SN 0300203771 through 0300220006)

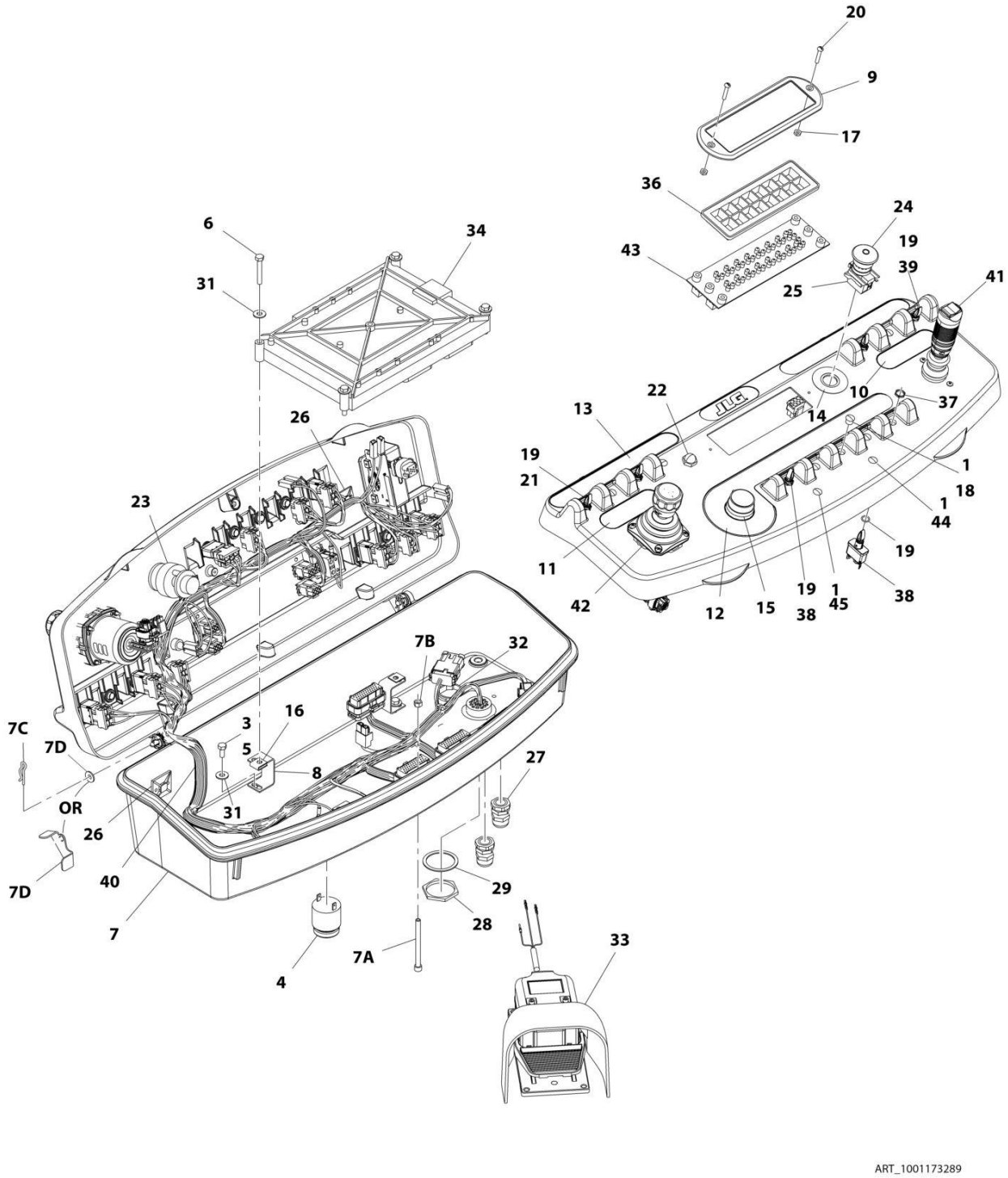

ART_1001173289

FIGURE 5-22. CONSOLE BOX ASSEMBLY - WITHOUT SKYGUARD (SN 0300203771 through 0300220006)

ITEM	PART NUMBER	QTY	DESCRIPTION	REV
	1001173289	Ref	CONSOLE BOX ASSEMBLY - WITHOUT SKYGUARD	H
1	0100009	AR	Sealant	
3	0100081	AR	Adhesive	
4	0140011	1	Alarm	
5	0641405	4	Bolt, 1/4 x 5/8	
6	0641414	4	Bolt, 1/4 x 1-3/4	
7	1001184324	1	Platform Console Box	
7A	0630568	1	Capscrew 3/8 x 4-1/2	
7B	3311601	1	Nut 3/8	
7C	3470003	2	Hairpin	
7D	4711500	AR	Flatwasher 5/16	
7D	1001200575	AR	Bracket, Stop	
8	0902751	4	Bracket **(SN 0300203771 through 0300207028)**	
8	1001172760	4	Bracket **(SN 0300207029 through 0300220006)**	
9	1670829	1	Bezel	
10	1702565	1	Decal - Drive and Steer	
11	1702566	1	Decal - Lift and Swing	
12	1702567	1	Decal - Function Speed	
13	1001184626	1	Decal - Horn	
14	1704260	1	Decal - EMS	
15	2560136	1	Handle, Knob	
16	3300353	4	Nut, Tinnerman	
17	3300408	2	Nut, Lock	
18	3520054	6	Plug	
19	3790012	6	O-Ring	
20	3911018	2	Screw, 10 x 1-1/8	
21	1001161709	1	Switch, Toggle	
22	4360387	1	Switch, Pushbutton	
23	4360407	1	Switch, Potentiometer	
24	4360475	1	Switch, Emergency	
24	7020175	1	Cap, Red	
24	7020176	1	Contact Block	
25	4360476	1	Block, Contact	
26	4460234	4	Terminal	
27	4460428	2	Connector, Strain Relief	
28	4460470	1	Nut, Terminal	
29	4460471	1	Washer, Lock	
31	4751400	8	Washer, 1/4	
32	1001110434	1	Plug	
33	1001117174	1	Footswitch Assembly (See FOOTSWITCH ASSEMBLY for Breakdown)	
34	1001157196	1	Controller, Module (Note: Re-calibration Required when Replaced)	
36	1001146220	1	Housing, Display Light	
37	1001155044	6	Nut, Special 15/32-32	
38	1001155045	4	Switch, Toggle	
39	1001159256	1	Switch, Toggle	
40	1001164353	1	Harness, Platform Console Box (See ELECTRICAL SECTION for Breakdown)	
41	1001166538	NLA	Controller Assembly (Drive and Steer) (Use p/n 1001212415) (See	

ITEM	PART NUMBER	QTY	DESCRIPTION	REV
			CONTROLLER ASSEMBLY (DRIVE AND STEER) for Breakdown)	
42	1001166539	1	Controller Assembly (Lift and Swing) (See CONTROLLER ASSEMBLY (LIFT AND SWING) for Breakdown)	
43	1001170838	1	Gauge, Led Panel	
44	3520026	1	Plug, Hole	
45	3520027	1	Plug, Hole	

FIGURE 5-23. CONSOLE BOX ASSEMBLY - WITHOUT SKYGUARD (SN 0300220007 through 0300272360, SN E300000100 through E300007988, SN 1300007289 through 1300007393)

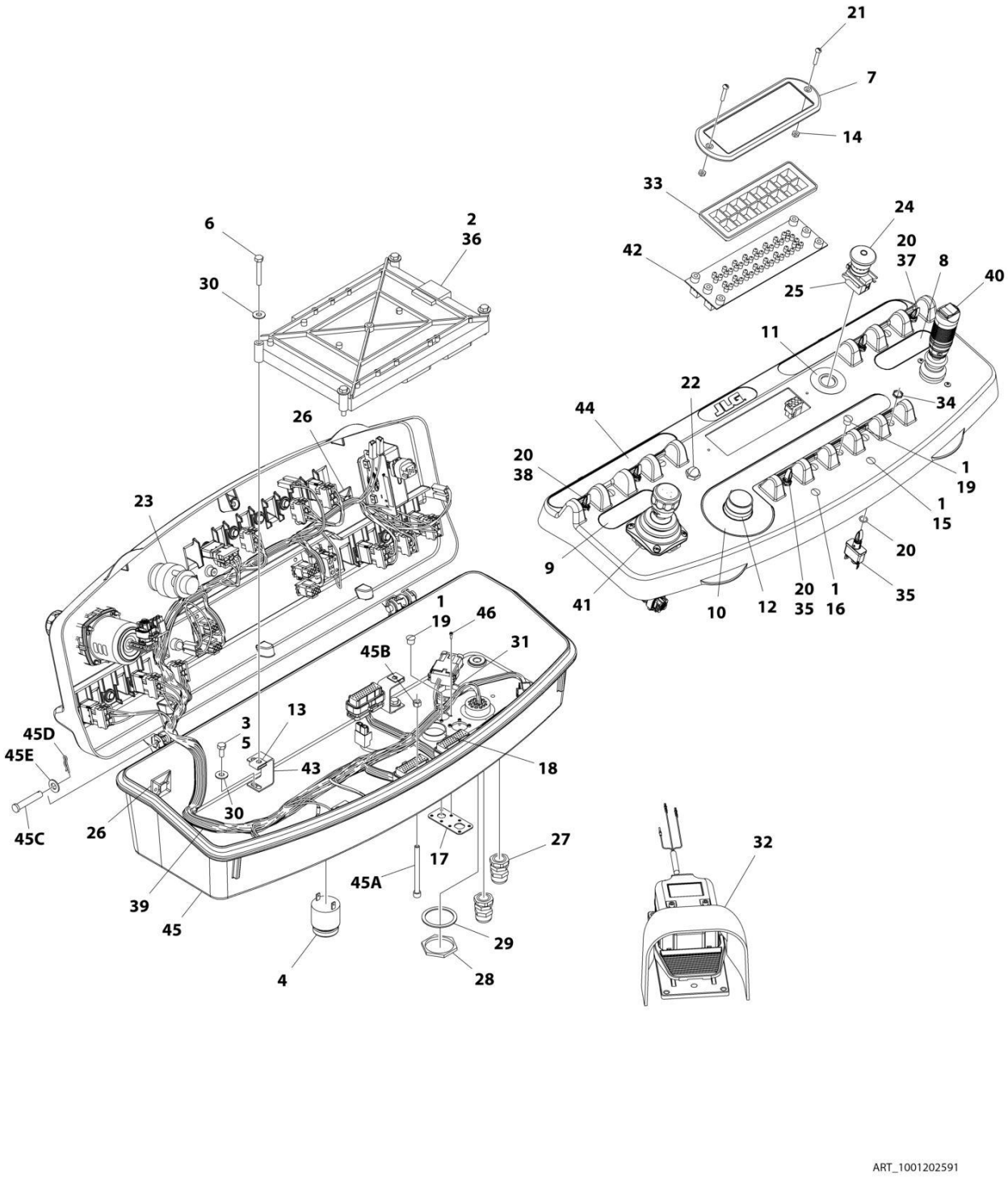

FIGURE 5-23. CONSOLE BOX ASSEMBLY - WITHOUT SKYGUARD (SN 0300220007 through 0300272360, SN E300000100 through E300007988, SN 1300007289 through 1300007393)

ITEM	PART NUMBER	QTY	DESCRIPTION	REV
	1001202591	Ref	CONSOLE BOX ASSEMBLY - WITHOUT SKYGUARD	C
1	0100009	AR	Sealant	
2	0100048	AR	Adhesive	
3	0100081	AR	Loctite #454	
4	0140011	1	Alarm	
5	0641405	4	Bolt 1/4 x 5/8	
6	0641414	4	Bolt 1/4 x 1-3/4	
7	1670829	1	Bezel	
8	1702565	1	Decal - Drive and Steer	
9	1702566	1	Decal - Lift and Swing	
10	1702567	1	Decal - Function Speed	
11	1704260	1	Decal - EMS	
12	2560136	1	Handle, Knob	
13	3300353	4	Nut, Tinnerman	
14	3300408	2	Nut	
15	3520026	1	Plug, Hole	
16	3520027	1	Plug, Hole	
17	3520033	AR	Plug, Hole	
17	1001213882	AR	Connector Mount	
18	3520035	1	Plug, Cap	
19	3520054	AR	Plug	
20	3790012	6	O-Ring	
21	3911018	2	Screw 10 x 1-1/8	
22	4360387	1	Switch, Pushbutton	
23	4360407	1	Switch, Potentiometer	
24	4360475	1	Switch, Emergency	
24	7020175	1	Cap, Red	
24	7020176	1	Contact Block	
25	4360476	1	Block, Contact	
26	4460234	4	Terminal	
27	4460428	2	Connector, Strain Relief	
28	4460470	1	Nut, Terminal	
29	4460471	1	Washer	
30	4751400	8	Washer 1/4	
31	1001110434	1	Plug	
32	1001117174	1	Footswitch Assembly (See FOOTSWITCH ASSEMBLY for Breakdown)	
33	1001146220	1	Housing, Display Light	
34	1001155044	6	Nut 15/32	
35	1001155045	4	Switch, Toggle	
36	1001157196	1	Controller, Module (Note: Re-calibration Required when Replaced)	
37	1001159256	1	Switch, Toggle	
38	1001161709	1	Switch, Toggle	
39	1001164353	1	Harness, Platform Console Box (See ELECTRICAL SECTION for Breakdown)	
40	1001166538	NLA	Controller Assembly (Drive and Steer) (Use p/n 1001212415) (See CONTROLLER ASSEMBLY (DRIVE AND STEER) for Breakdown)	
41	1001166539	1	Controller Assembly (Lift and Swing) (See CONTROLLER ASSEMBLY (LIFT AND SWING) for Breakdown)	
42	1001170838	1	Gauge, Led Panel	

SECTION 5 - PLATFORM

ITEM	PART NUMBER	QTY	DESCRIPTION	REV
43	1001172760	4	Bracket	
44	1001184626	1	Decal - Horn	
45	1001201891	1	Platform Console Box **(SN 0300203771 through 0300222801)**	
45	1001215228	1	Platform Console Box **(SN 0300222802 through 0300272360, SN E300000100 through E300007988, SN 1300007289 through 1300007393, Except SN 0300272174 through 0300272184, Excluding E300007847)**	
45A	0630568	1	Capscrew 3/8 x 4-1/2	
45B	3311601	1	Nut 3/8	
45C	3430616	2	Pin	
45D	3470003	2	Hairpin	
45E	4711600	2	Washer 3/8	
46	3900349	AR	Screw M2.5	

FIGURE 5-24. CONSOLE BOX ASSEMBLY - WITH SKYGUARD (SN 0300203771 through 0300220006)

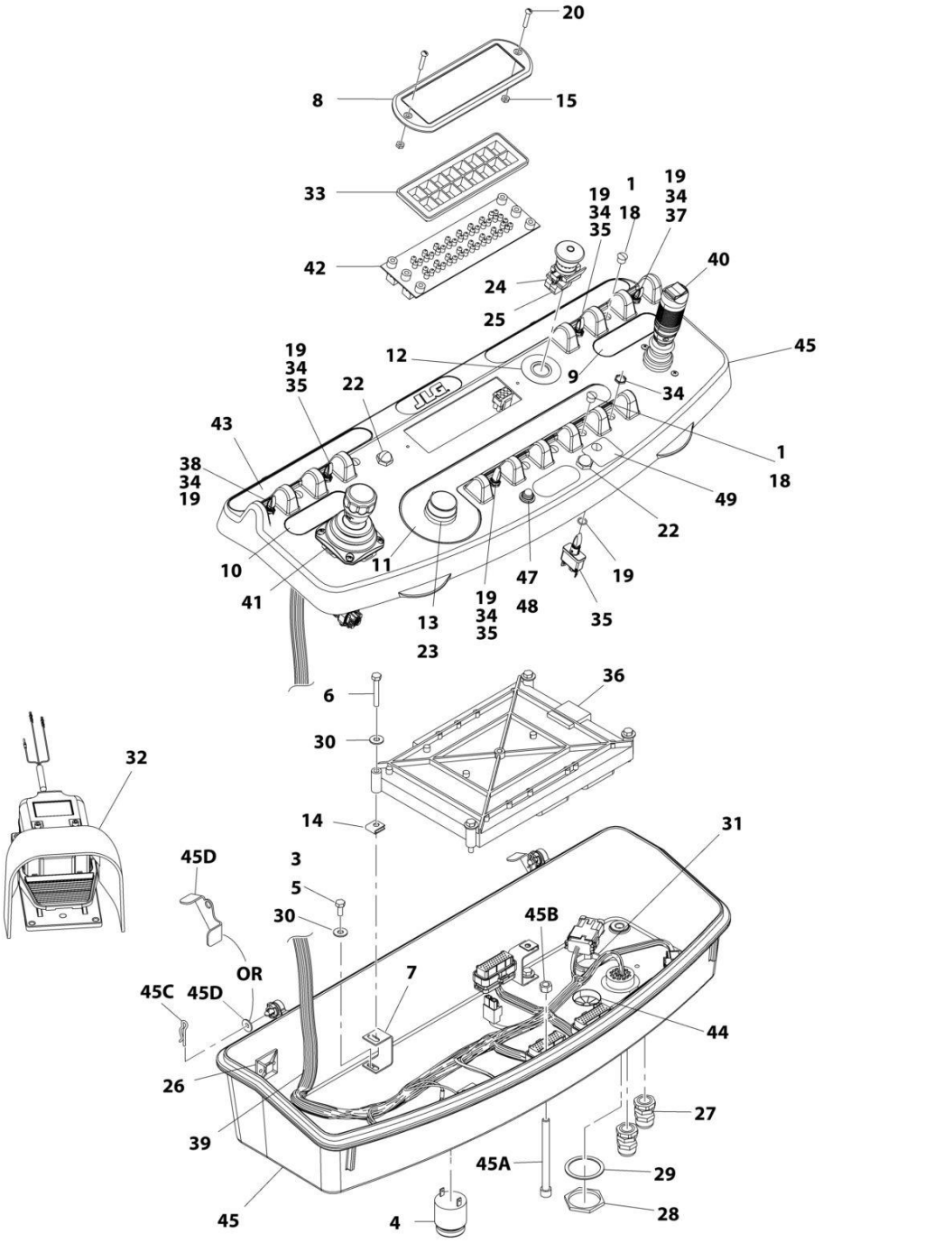

FIGURE 5-24. CONSOLE BOX ASSEMBLY - WITH SKYGUARD (SN 0300203771 through 0300220006)

ITEM	PART NUMBER	QTY	DESCRIPTION	REV
	1001193732	Ref	CONSOLE BOX ASSEMBLY - WITH SKYGUARD **(SN 0300203771 through 0300220006)**	D
1	0100009	AR	Sealant	
2	0100048	AR	Grease, Dielectric (Not Shown)	
3	0100081	AR	Adhesive	
4	0140011	1	Alarm	
5	0641405	4	Bolt, 1/4 x 5/8	
6	0641414	4	Bolt, 1/4 x 1-3/4	
7	0902751	4	Bracket **(SN 0300203771 through 0300207028)**	
7	1001172760	4	Bracket **(SN 0300207029 through 0300220006)**	
8	1670829	1	Bezel	
9	1702565	1	Decal - Drive and Steer	
10	1702566	1	Decal - Lift and Swing	
11	1702567	1	Decal - Function Speed	
12	1704260	1	Decal - EMS	
13	2560136	1	Handle, Knob	
14	3300353	4	Nut, Tinnerman	
15	3300408	2	Nut, Lock	
18	3520054	6	Plug	
19	3790012	6	O-Ring	
20	3911018	2	Screw, 10 x 1-1/8	
21	4240099	AR	Tie-Strap (Not Shown)	
22	4360387	2	Switch, Pushbutton	
23	4360407	1	Switch, Potentiometer	
24	4360475	1	Switch, Emergency	
24	7020175	1	Cap, Red	
24	7020176	1	Contact Block	
25	4360476	1	Block, Contact	
26	4460234	6	Terminal	
27	4460428	2	Connector, Strain Relief	
28	4460470	1	Nut, Terminal	
29	4460471	1	Washer, Lock	
30	4751400	8	Washer, 1/4	
31	1001110434	1	Plug	
32	1001117174	1	Footswitch Assembly (See FOOTSWITCH ASSEMBLY for Breakdown)	
33	1001146220	1	Housing, Display Light	
34	1001155044	6	Nut, Special 15/32-32	
35	1001155045	4	Switch, Toggle	
36	1001157196	1	Controller, Module (Note: Re-calibration Required when Replaced)	
37	1001159256	1	Switch, Toggle	
38	1001161709	1	Switch, Toggle	
39	1001164353	1	Harness, Platform Console Box (See ELECTRICAL SECTION for Breakdown)	
40	1001166538	NLA	Controller Assembly (Drive and Steer) (Use p/n 1001212415) (See CONTROLLER ASSEMBLY (DRIVE AND STEER) for Breakdown)	
41	1001166539	1	Controller Assembly (Lift and Swing) (See CONTROLLER ASSEMBLY - LIFT AND SWING for Breakdown)	
42	1001170838	1	Gauge, Led Panel	
43	1001184626	1	Decal - Horn	
44	1001185281	1	Plug	

SECTION 5 - PLATFORM

ITEM	PART NUMBER	QTY	DESCRIPTION	REV
45	1001193730	1	Platform Console Box	
45A	0630568	1	Capscrew 3/8 x 4-1/2	
45B	3311601	1	Nut 3/8	
45C	3470003	2	Hairpin	
45D	4711500	AR	Flatwasher 5/16	
45D	1001200575	AR	Bracket, Stop	
46	1001192292	1	Harness, SkyGuard (Not Shown - See ELECTRICAL SECTION for Breakdown)	
47	2920028	1	Light, Indicator	
48	2920029	1	Bulb, Light	
49	1001144433	1	Decal - No Weight	

FIGURE 5-25. CONSOLE BOX ASSEMBLY - WITH SKYGUARD (SN 0300220007 through 0300259126, SN E300000100 through E300007988, SN 1300007289 through 1300007393)

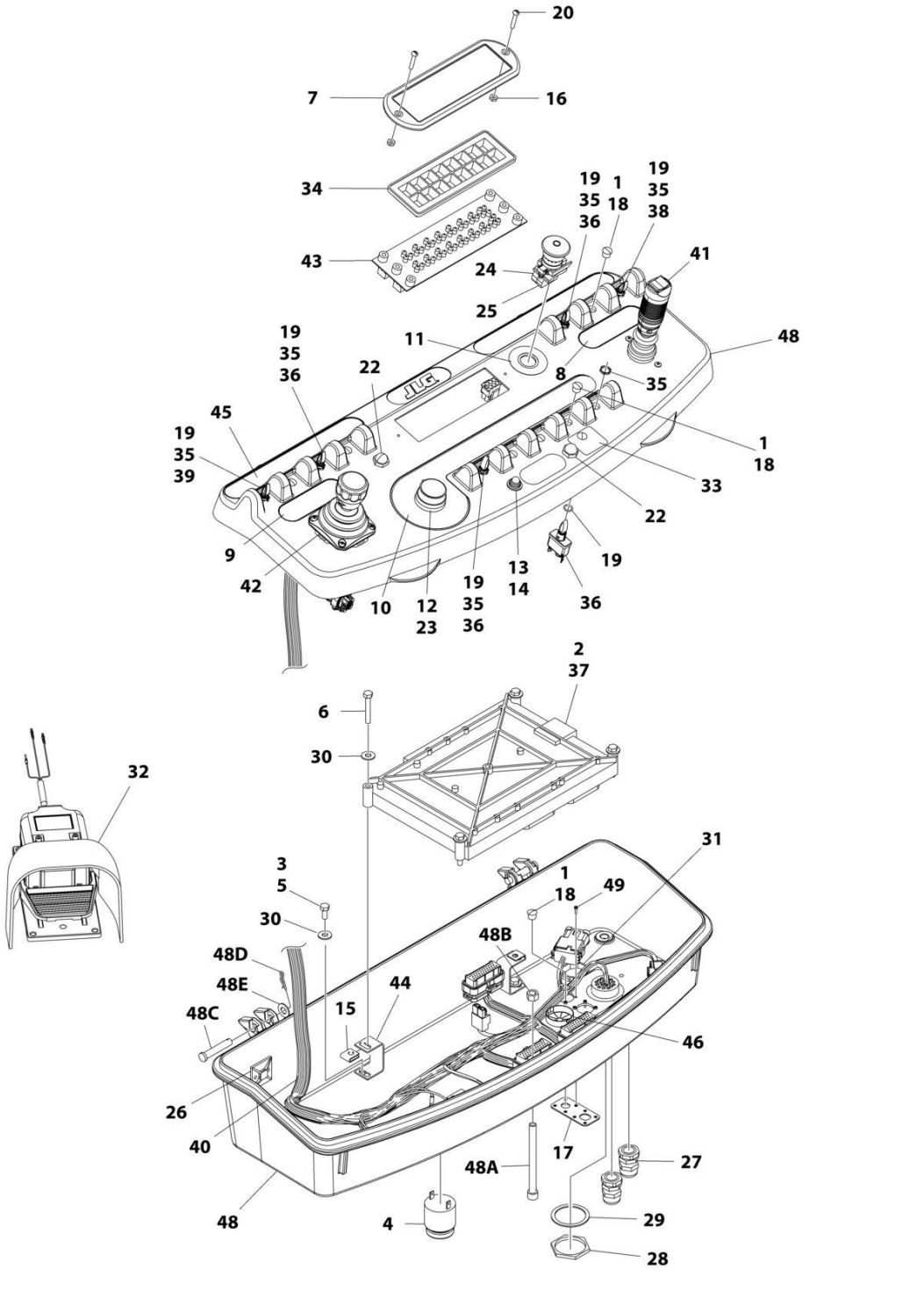

FIGURE 5-25. CONSOLE BOX ASSEMBLY - WITH SKYGUARD (SN 0300220007 through 0300259126, SN E300000100 through E300007988, SN 1300007289 through 1300007393)

ITEM	PART NUMBER	QTY	DESCRIPTION	REV
	1001202557	Ref	CONSOLE BOX ASSEMBLY - WITH SKYGUARD	C
1	0100009	AR	Sealant	
2	0100048	AR	Adhesive	
3	0100081	AR	Adhesive	
4	0140011	1	Alarm	
5	0641405	4	Bolt 1/4 x 5/8	
6	0641414	4	Bolt 1/4 x 1-3/4	
7	1670829	1	Bezel	
8	1702565	1	Decal - Drive and Steer	
9	1702566	1	Decal - Lift and Swing	
10	1702567	1	Decal - Function Speed	
11	1704260	1	Decal - EMS	
12	2560136	1	Handle, Knob	
13	2920028	1	Light, Indicator	
14	2920029	1	Bulb, Light	
15	3300353	4	Nut, Tinnerman	
16	3300408	2	Nut	
17	3520033	AR	Plug, Hole	
17	1001213882	AR	Connector Mount	
18	3520054	AR	Plug	
19	3790012	6	O-Ring	
20	3911018	2	Screw 10 x 1-1/8	
21	4240099	AR	Tie-Strap (Not Shown)	
22	4360387	2	Switch, Pushbutton	
23	4360407	1	Switch, Potentiometer	
24	4360475	1	Switch, Emergency	
24	7020175	1	Cap, Red	
24	7020176	1	Contact Block	
25	4360476	1	Block, Contact	
26	4460234	6	Terminal	
27	4460428	2	Connector, Strain Relief	
28	4460470	1	Nut, Terminal	
29	4460471	1	Washer	
30	4751400	8	Washer 1/4	
31	1001110434	1	Plug	
32	1001117174	1	Footswitch Assembly (See FOOTSWITCH ASSEMBLY for Breakdown)	
33	1001144433	1	Decal - No Weight	
34	1001146220	1	Housing, Display Light	
35	1001155044	6	Nut 15/32	
36	1001155045	4	Switch, Toggle	
37	1001157196	1	Controller, Module (Note: Re-calibration Required when Replaced)	
38	1001159256	1	Switch, Toggle	
39	1001161709	1	Switch, Toggle	
40	1001164353	1	Harness, Platform Console Box (See ELECTRICAL SECTION for Breakdown)	
41	1001166538	NLA	Controller Assembly (Drive and Steer) (Use p/n 1001212415) (See CONTROLLER ASSEMBLY (DRIVE AND STEER) for Breakdown)	
42	1001166539	1	Controller Assembly (Lift and Swing) (See CONTROLLER ASSEMBLY - LIFT AND SWING for Breakdown)	

SECTION 5 - PLATFORM

ITEM	PART NUMBER	QTY	DESCRIPTION	REV
43	1001170838	1	Gauge, Led Panel	
44	1001172760	4	Bracket	
45	1001184626	1	Decal - Horn	
46	1001185281	1	Plug	
47	1001192292	1	Harness, SkyGuard (Not Shown - See ELECTRICAL SECTION for Breakdown)	
48	1001201891	1	Platform Console Box **(SN 0300203771 through 0300222801)**	
48	1001215228	1	Platform Console Box **(SN 0300222802 through 0300259126, SN E300000100 through E300007988, SN 1300007289 through 1300007393, Excluding E300007847)**	
48A	0630568	1	Capscrew 3/8 x 4-1/2	
48B	3311601	1	Nut 3/8	
48C	3430616	2	Pin	
48D	3470003	2	Hairpin	
48E	4711600	2	Washer 3/8	
49	3900349	AR	Screw M2.5	

SECTION 5 - PLATFORM

FIGURE 5-26. CONSOLE BOX ASSEMBLY - WITH SKYGUARD (SN 0300259127 through 0300272360)

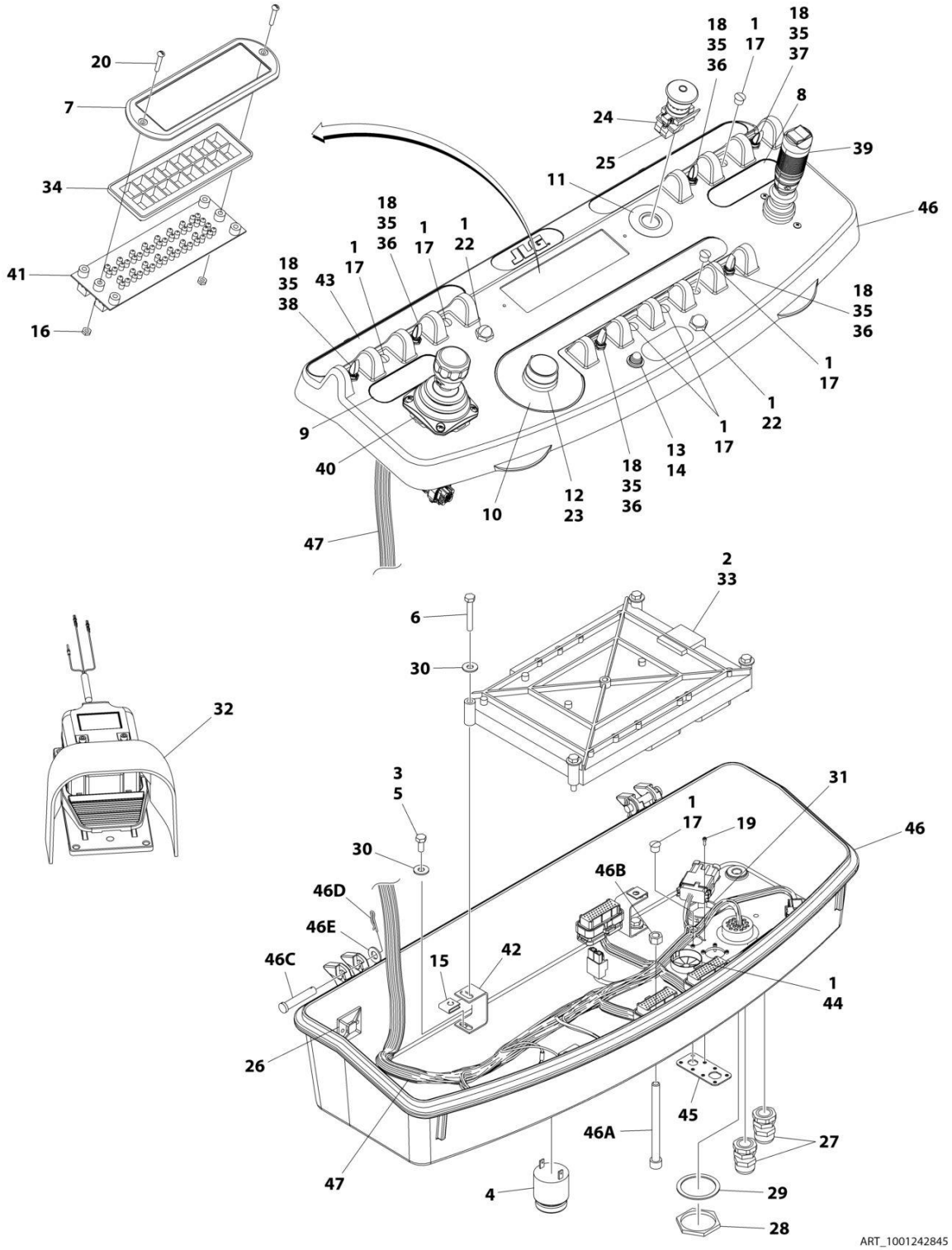

FIGURE 5-26. CONSOLE BOX ASSEMBLY - WITH SKYGUARD (SN 0300259127 through 0300272360)

ITEM	PART NUMBER	QTY	DESCRIPTION	REV
	1001242845	Ref	CONSOLE BOX ASSEMBLY - WITH SKYGUARD	A
1	0100009	AR	Sealant	
2	0100048	AR	Adhesive	
3	0100035	AR	Compound, Locking	
4	0140011	1	Alarm	
5	0641405	4	Bolt 1/4 x 5/8	
6	0641414	4	Bolt 1/4 x 1-3/4	
7	1670829	1	Bezel	
8	1702565	1	Decal - Drive and Steer	
9	1702566	1	Decal - Lift and Swing	
10	1702567	1	Decal - Function Speed	
11	1704260	1	Decal - EMS	
12	2560136	1	Handle, Knob	
13	2920028	1	Light, Indicator	
14	2920029	1	Bulb, Light	
15	3300353	4	Nut, Tinnerman	
16	3300408	2	Nut	
17	3520054	7	Plug	
18	3790012	6	O-Ring	
19	3900349	8	Screw M2.5	
20	3911018	2	Screw 10 x 1-1/8	
21	4240099	AR	Tie-Strap (Not Shown)	
22	4360387	2	Switch, Pushbutton	
23	4360407	1	Switch, Potentiometer	
24	4360475	1	Switch, Emergency	
24	7020175	1	Cap, Red	
24	7020176	1	Contact Block	
25	4360476	1	Block, Contact	
26	4460234	6	Terminal	
27	4460428	2	Connector, Strain Relief	
28	4460470	1	Nut, Terminal	
29	4460471	1	Washer	
30	4751400	8	Washer 1/4	
31	1001110434	1	Plug	
32	1001117174	1	Footswitch Assembly (See FOOTSWITCH ASSEMBLY for Breakdown)	
33	1001157196	1	Controller, Module (Note: Re-calibration Required when Replaced)	
34	1001146220	1	Housing, Display Light	
35	1001155044	6	Nut 15/32	
36	1001155045	4	Switch, Toggle	
37	1001159256	1	Switch, Toggle	
38	1001161709	1	Switch, Toggle	
39	1001166538	NLA	Controller Assembly (Drive and Steer) (Use p/n 1001212415) (See CONTROLLER ASSEMBLY (DRIVE AND STEER) for Breakdown)	
40	1001166539	1	Controller Assembly (Lift and Swing) (See CONTROLLER ASSEMBLY - LIFT AND SWING for Breakdown)	
41	1001170838	1	Gauge, Led Panel	
42	1001172760	4	Bracket	
43	1001184626	1	Decal - Horn	
44	1001185281	1	Plug	

SECTION 5 - PLATFORM

ITEM	PART NUMBER	QTY	DESCRIPTION	REV
45	1001213882	1	Connector Mount	
46	1001215228	1	Platform Console Box	
46A	0630568	1	Capscrew 3/8 x 4-1/2	
46B	3311601	1	Nut 3/8	
46C	3430616	2	Pin	
46D	3470003	2	Hairpin	
46E	4711600	2	Washer 3/8	
47	1001243168	1	Harness, Platform Console Box (See ELECTRICAL SECTION for Breakdown)	

FIGURE 5-27. CONTROLLER ASSEMBLY - DRIVE AND STEER

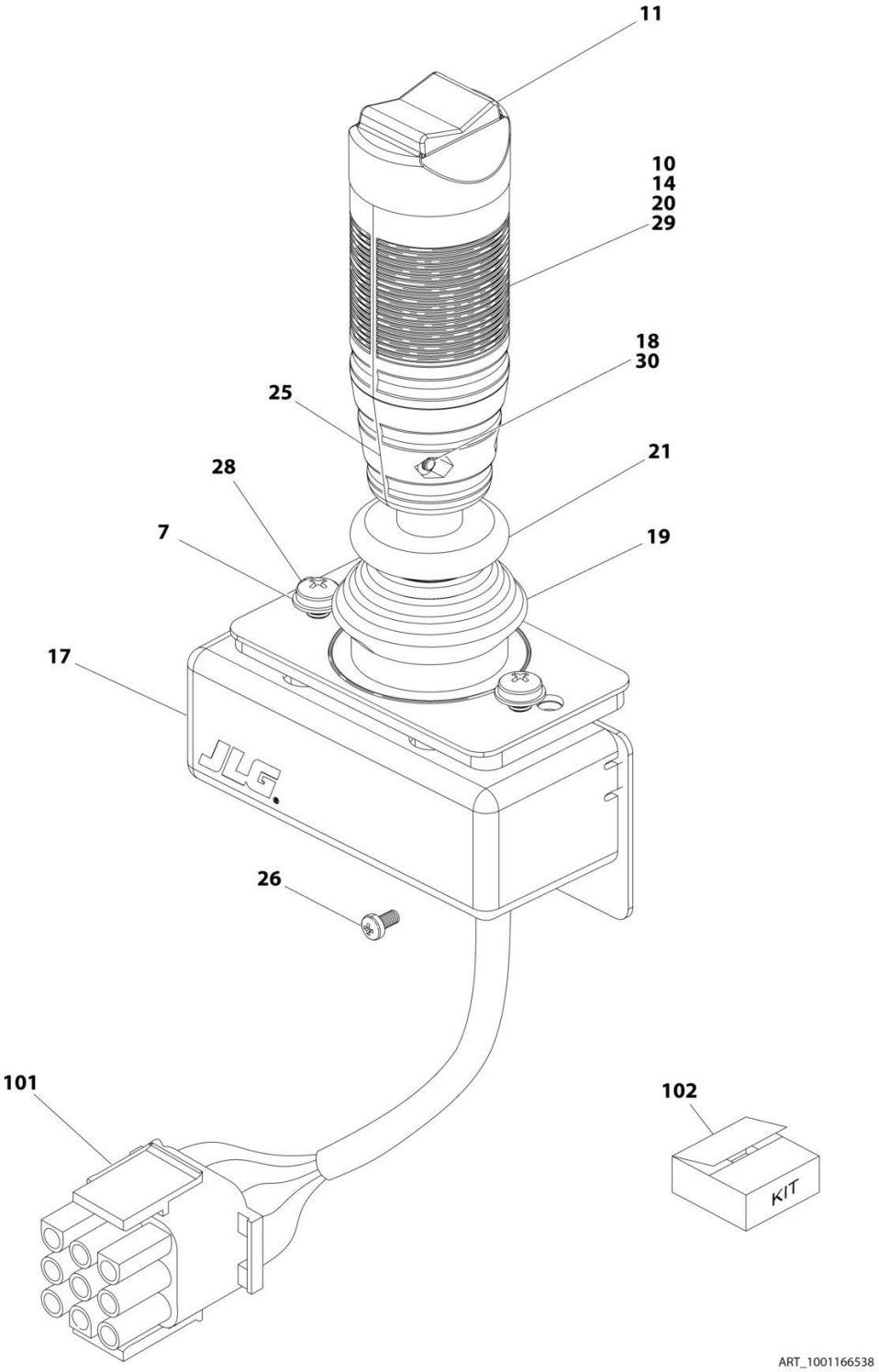

FIGURE 5-27. CONTROLLER ASSEMBLY - DRIVE AND STEER

ITEM	PART NUMBER	QTY	DESCRIPTION	REV
	1001166538	Ref	CONTROLLER ASSEMBLY - DRIVE AND STEER	G
	Note	Ref	Note: Use p/n 1001212415 for Replacement.	
7	70004738	2	Washer	
10	70004739	1	Roller	
11	70004740	1	Boot, Switch	
14	70004741	2	Half, Handle	
17	70004742	1	Enclosure	
18	70004743	4	Nut	
19	70004744	NSS	Boot, Controller (Use Item 102)	
20	70004745	NSS	Tube, Locking (Use Item 102)	
21	70004746	NSS	Disc, Locking (Use Item 102)	
25	70004747	2	Seal, Rope	
26	70004748	1	Screw, M3 x 6	
28	70004749	2	Screw, M5 x 20	
29	70004750	1	Pin, Dowel	
30	70004751	4	Screw, M3 x 16	
101	4460265	1	Connector - 9 Position	
101	4460226	7	Socket, Female	
102	70005230	1	Boot Kit (Include Items 19-21)	

FIGURE 5-28. CONTROLLER ASSEMBLY - LIFT AND SWING

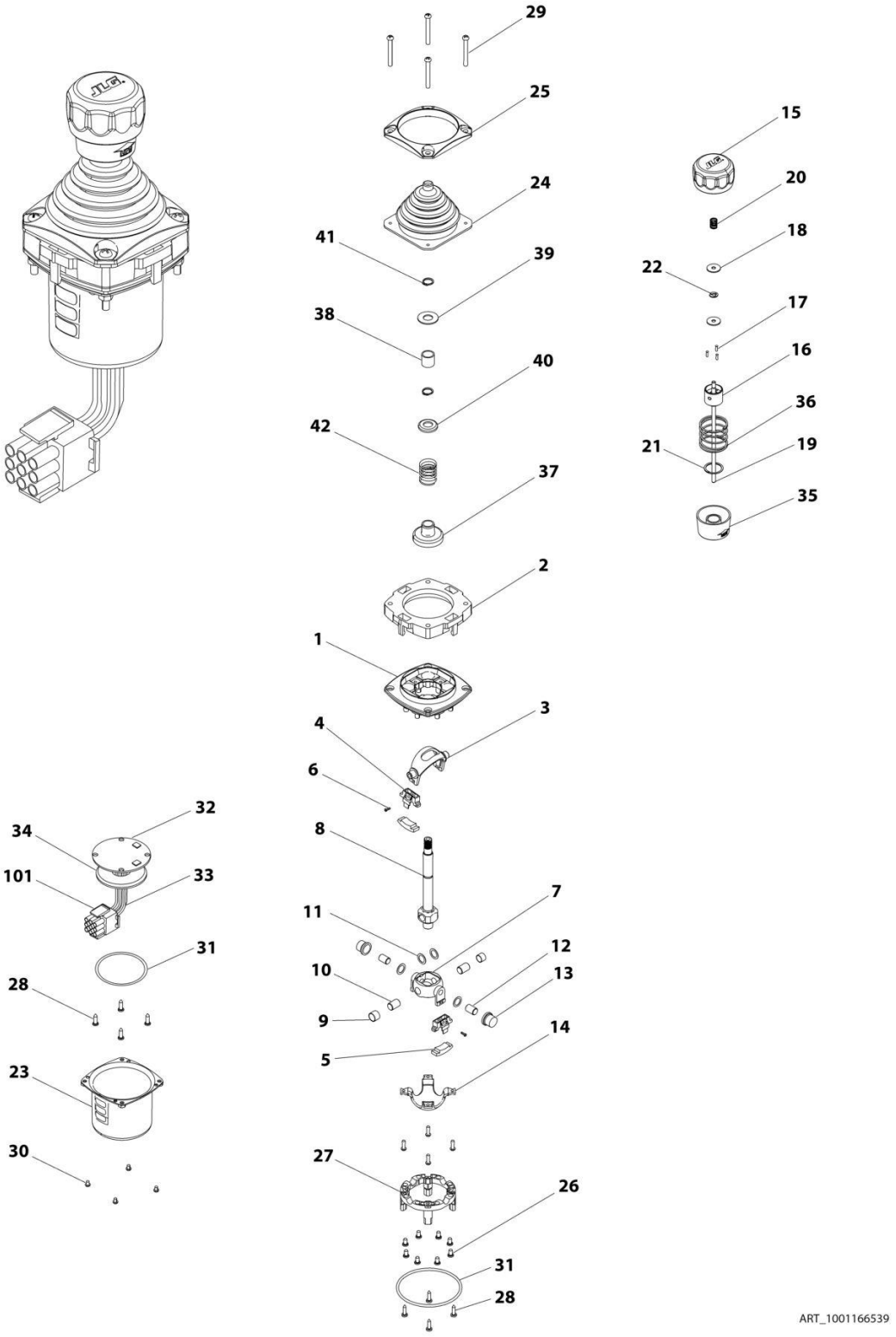

FIGURE 5-28. CONTROLLER ASSEMBLY - LIFT AND SWING

ITEM	PART NUMBER	QTY	DESCRIPTION	REV
	1001166539	Ref	CONTROLLER ASSEMBLY - LIFT AND SWING	D
1	See Note	NSS	Main Cast Body (Note: Not Available - Purchase Complete Assembly)	
2	70004752	1	Adapter	
3	See Note	NSS	Pivot Arm, Plastic (Note: Not Available - Purchase Complete Assembly)	
4	See Note	NSS	Holder, Magnet (Note: Not Available - Purchase Complete Assembly)	
5	See Note	NSS	Arc, Magnet (Note: Not Available - Purchase Complete Assembly)	
6	See Note	NSS	Screw (Note: Not Available for Purchase)	
7	See Note	NSS	Pivot Arm, Cast (Note: Not Available - Purchase Complete Assembly)	
8	See Note	NSS	Shaft, Main (Note: Not Available - Purchase Complete Assembly)	
9	See Note	NSS	Bearing (Note: Not Available - Purchase Complete Assembly)	
10	See Note	NSS	Pin (Note: Not Available - Purchase Complete Assembly)	
11	See Note	NSS	Shim (Note: Not Available - Purchase Complete Assembly)	
12	See Note	NSS	Pin (Note: Not Available - Purchase Complete Assembly)	
13	See Note	NSS	Bearing (Note: Not Available - Purchase Complete Assembly)	
14	See Note	NSS	Dome, Centering (Note: Not Available - Purchase Complete Assembly)	
15	70004753	1	Cap	
16	70004754	1	Insert, Cap	
17	70004755	3	Pin	
18	70004756	2	Washer	
19	70004757	1	Pin, Centering	
20	70004758	1	Spring	
21	70004759	1	Ring, Retaining	
22	70004760	1	E-Ring	
23	70004761	1	Can, Enclosure	
24	70004762	1	Boot	
25	70004763	1	Bezel	
26	See Note	8	Screw (Note: Not Available for Purchase)	
27	See Note	NSS	Base Mounting (Note: Not Available - Purchase Complete Assembly)	
28	See Note	4	Screw (Note: Not Available for Purchase)	
29	70004764	4	Screw	
30	70004765	4	Screw	
31	70004766	1	O-Ring	
32	See Note	NSS	Plate (Note: Not Available - Purchase Complete Assembly)	
33	See Note	NSS	Harness (Note: Not Available - Purchase Complete Assembly)	
34	70004767	1	Grommet, Rubber	
35	70004768	1	Housing	
36	70004769	1	Spring	
37	70004770	1	Stopper	
38	70004771	1	Spacer	
39	70004772	1	Washer	
40	70004773	1	Disc	
41	70004774	2	Ring, Retaining	
42	70004775	1	Spring	
101	4460265	1	Connector - 9 Position	
101	4460226	6	Socket, Female	

FIGURE 5-29. FOOTSWITCH ASSEMBLY

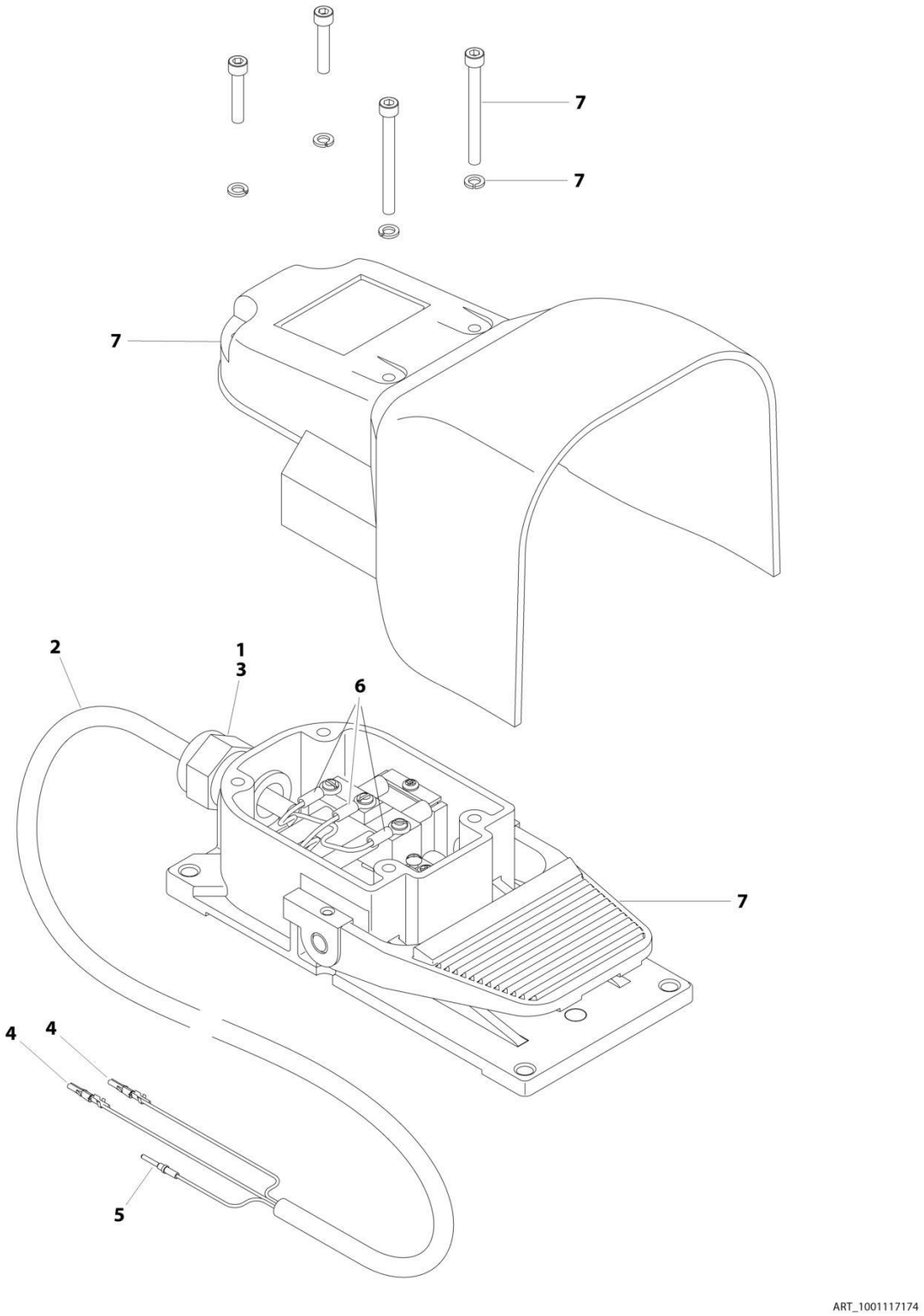

FIGURE 5-29. FOOTSWITCH ASSEMBLY

ITEM	PART NUMBER	QTY	DESCRIPTION	REV
	1001117174	Ref	FOOTSWITCH ASSEMBLY	B
1	0100020	AR	Sealant	
2	1060918	7.5 ft /2.29m	Cable, Electrical - 18/3	
3	4460071	1	Connector, Strain Relief	
4	4460226	2	Socket, Female	
5	4460464	1	Pin, Male	
6	1001098122	3	Terminal	
7	1001117172	1	Footswitch	
7	70002902	1	Switch, 20Amp	
7	70002903	1	Gasket	
7	70002905	1	Cover	
7	70002904	1	Kit, Replacement Bolt	

FIGURE 5-30. LIGHT PANEL INSTALLATION - 400S (ANSI, ANSI EXPORT AND CSA SPECS)

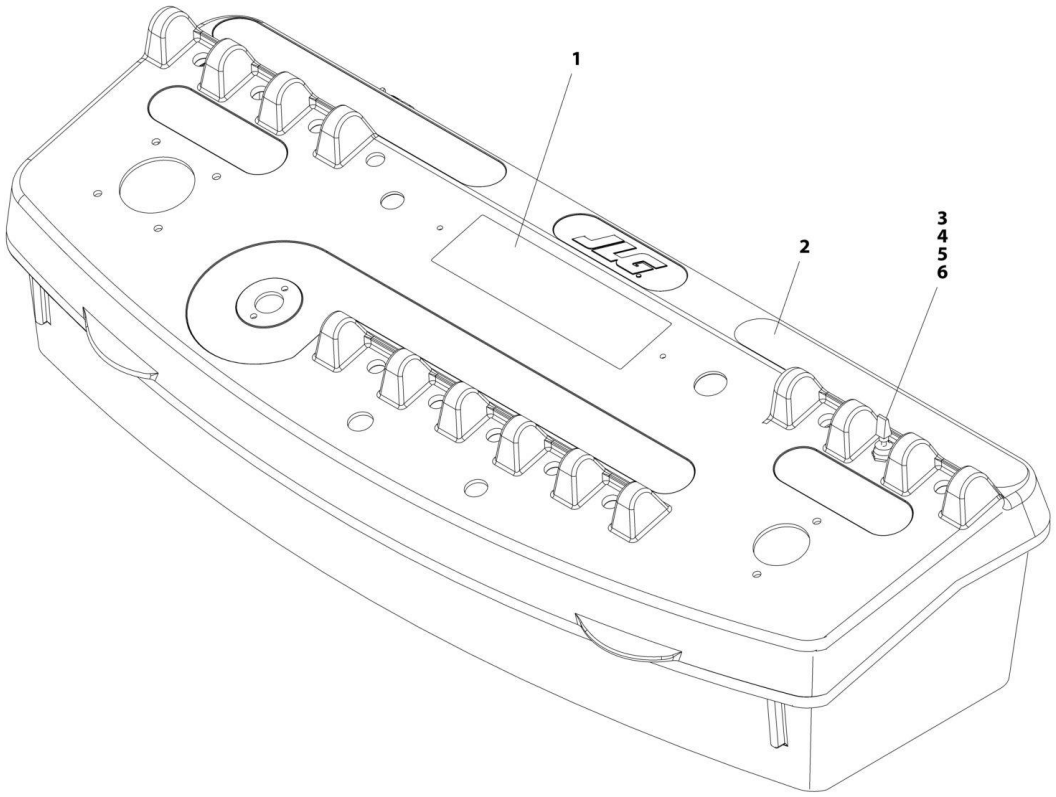

FIGURE 5-30. LIGHT PANEL INSTALLATION - 400S (ANSI, ANSI EXPORT AND CSA SPECS)

ITEM	PART NUMBER	QTY	DESCRIPTION	REV
	1001167963	Ref	LIGHT PANEL INSTALLATION - 400S (ANSI, ANSI EXPORT AND CSA SPECS)	D
1	1001167962	1	Decal - Platform Display	
2	1001195947	1	Decal - Stop and Auxiliary Power	
3	3790012	1	O-Ring	
4	1001155044	1	Nut, Special 15/32-32	
5	1001161710	1	Switch, Toggle	
6	4740397	1	Spacer **(SN 0300233912 through 0300272360, Except SN 0300272174 through 0300272184)**	

FIGURE 5-31. LIGHT PANEL INSTALLATION - 400S (CE SPECS)

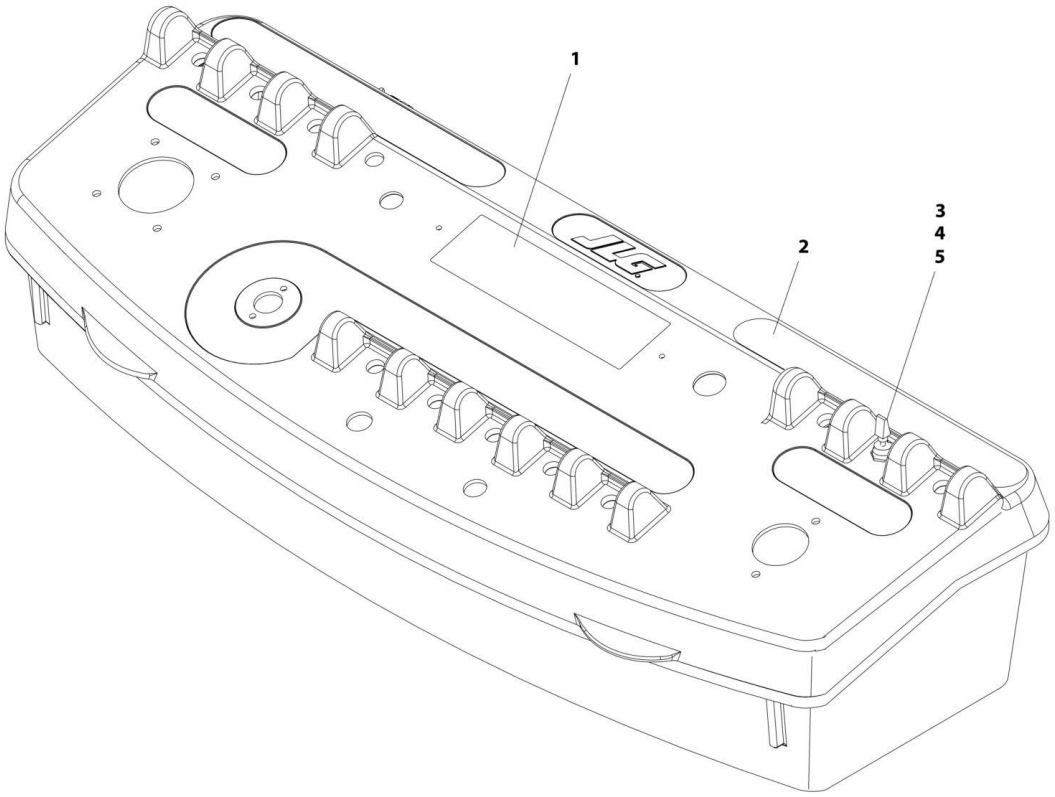

FIGURE 5-31. LIGHT PANEL INSTALLATION - 400S (CE SPECS)

ITEM	PART NUMBER	QTY	DESCRIPTION	REV
	1001184620	Ref	LIGHT PANEL INSTALLATION - 400S (CE SPECS)	A
1	1001184621	1	Decal - Platform Display	
2	1001184619	1	Decal - Stop and Auxiliary Power	
3	3790012	1	O-Ring	
4	1001155044	2	Nut, Special 15/32-32	
5	1001161710	1	Switch, Toggle	

FIGURE 5-32. LIGHT PANEL INSTALLATION - 460SJ

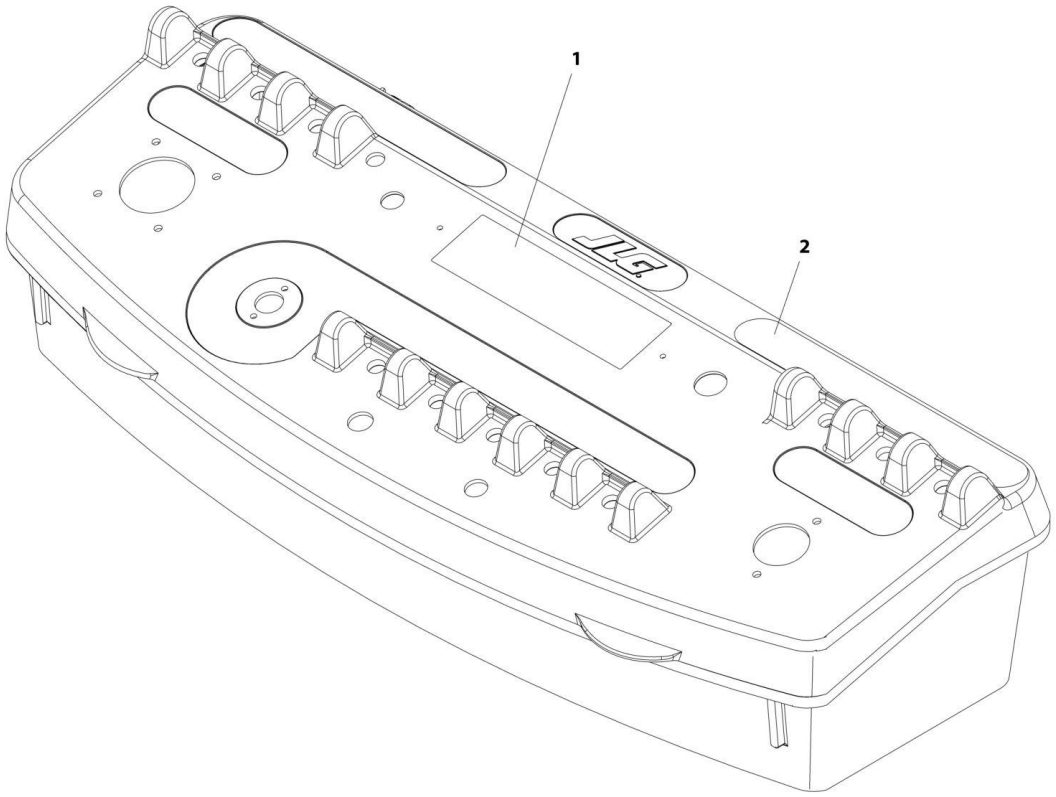

FIGURE 5-32. LIGHT PANEL INSTALLATION - 460SJ

ITEM	PART NUMBER	QTY	DESCRIPTION	REV
	1001170084	Ref	LIGHT PANEL INSTALLATION - 460SJ	B
1	1001170083	1	Decal - Platform Display	
2	1001184618	1	Decal - Stop and Auxiliary Power	

FIGURE 5-33. TRAY INSTALLATION

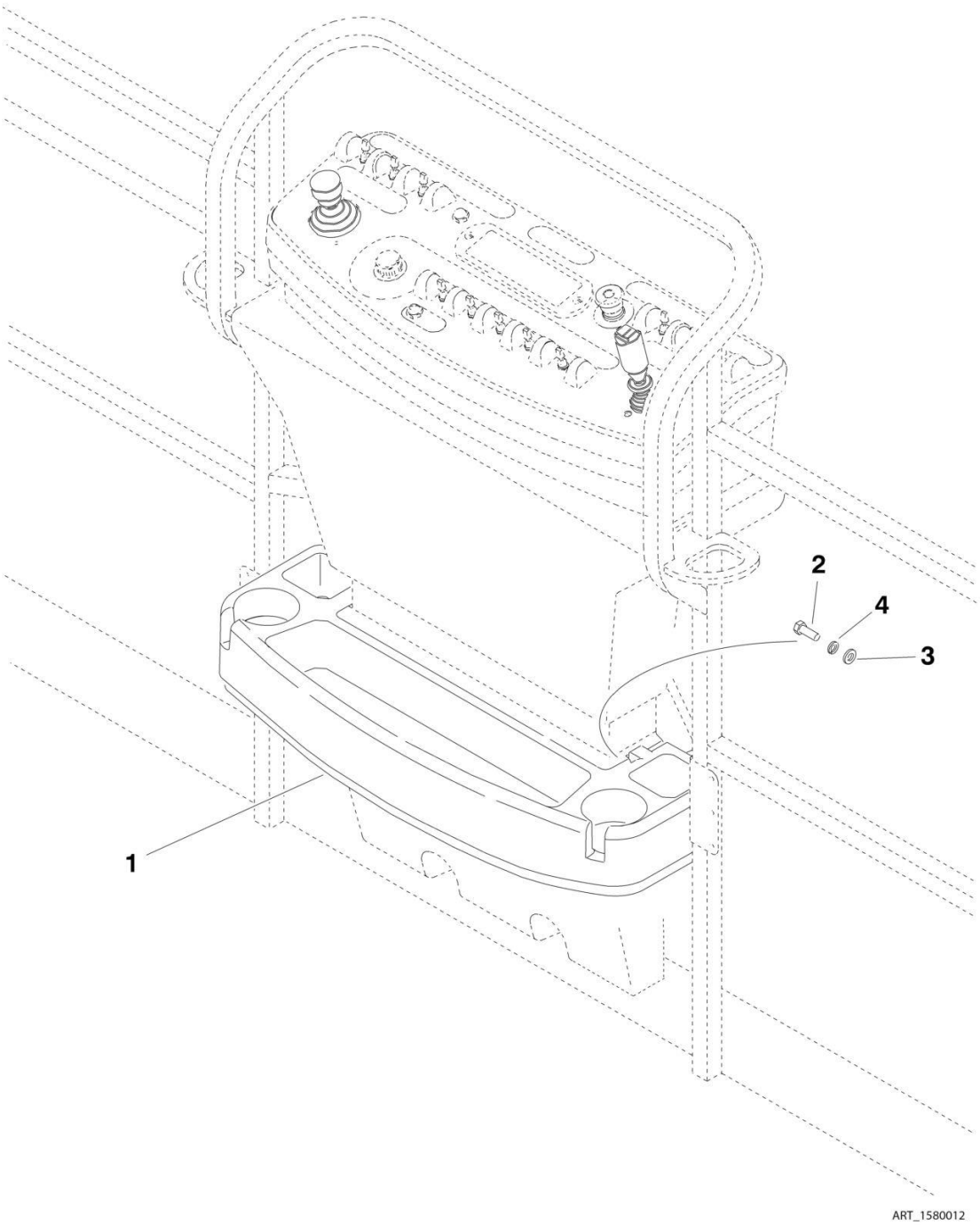

FIGURE 5-33. TRAY INSTALLATION

ITEM	PART NUMBER	QTY	DESCRIPTION	REV
		Ref	TRAY INSTALLATION	C
1	1580012	1	Tray, Storage (Center)	
2	0641406	2	Bolt 1/4 x 3/4	
3	4751400	2	Washer 1/4	
4	4761400	2	Washer 1/4	

SECTION 5 - PLATFORM

FIGURE 5-34. SOFT TOUCH INSTALLATION - 36IN X 8FT (91.5CM X 2.44M) PLATFORM (OPTIONAL)

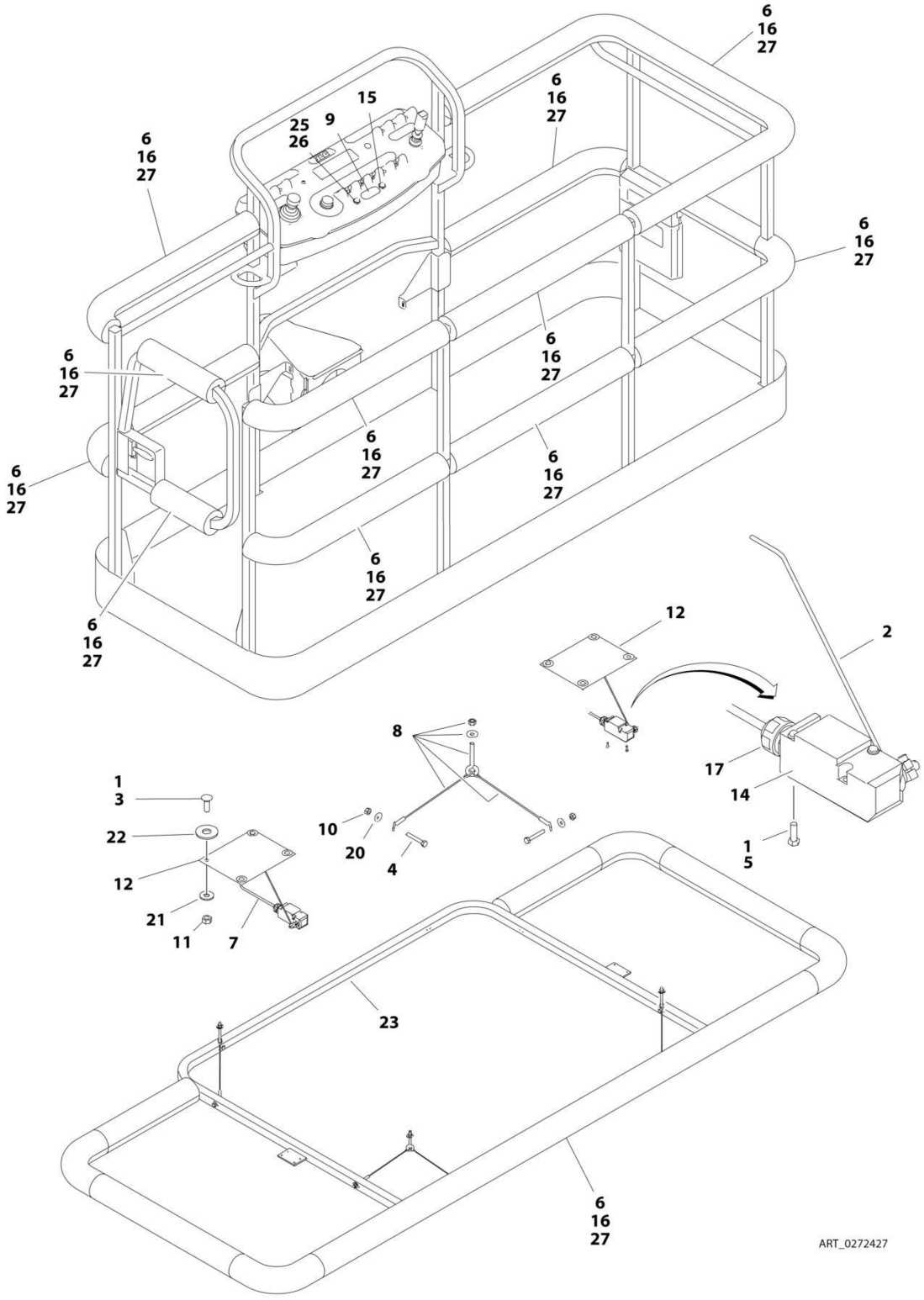

FIGURE 5-34. SOFT TOUCH INSTALLATION - 36IN X 8FT (91.5CM X 2.44M) PLATFORM (OPTIONAL)

ITEM	PART NUMBER	QTY	DESCRIPTION	REV
	0272427	Ref	SOFT TOUCH INSTALLATION - 36IN X 8FT (91.5CM X 2.44M) PLATFORM (OPTIONAL)	G
1	0100011	AR	Compound, Locking	
2	0200048	2	Arm, Switch Activator	
3	0630462	8	Bolt, Carriage	
4	0641414	8	Bolt 1/4 x 1-3/4	
5	0731005	4	Screw, Machine #10 x 5/8	
6	0940103	1	Bumper Kit	
7	1060341	23 ft/7m	Cable, Electrical - 16/2	
8	1060903	4	Wire Rope and Eyebolt Assembly	
9	1702938	1	Decal - Soft Touch Override	
10	3311401	8	Nut, 1/4	
11	3311501	8	Nut, 5/16	
12	3574091	2	Plate, Striker	
13	4240099	7	Tie-Strap (Not Shown)	
14	4360057	2	Switch, Limit	
15	4360387	1	Switch, Push Button	
16	4420068	1	Tape, Yellow Adhesive **(SN 0300203771 through 0300239021, SN E300000100 through E300005116)**	
17	4460049	2	Connector, Strain Relief	
18	4460234	7	Base, Tie-Strap Mounting (Not Shown)	
19	4460425	1	Connector, Strain Relief (Not Shown - Located on Bottom of Platform)	
20	4751400	8	Washer, 1/4	
21	4751500	12	Washer, 5/16	
22	4751800	8	Washer, 1/2	
23	4846673	1	Rail, Soft Touch	
24	4933218	1	Soft Touch Wiring Diagram (Not Shown - See ELECTRICAL SECTION for Breakdown)	
25	2920028	1	Light, Indicator	
26	2920029	1	Bulb	
27	1001197017	AR	Strap, Cable Tie (Yellow)	

FIGURE 5-35. SKYGUARD SYSTEM INSTALLATION (SN 0300203771 through 0300259126, SN E300000100 through E300007988)

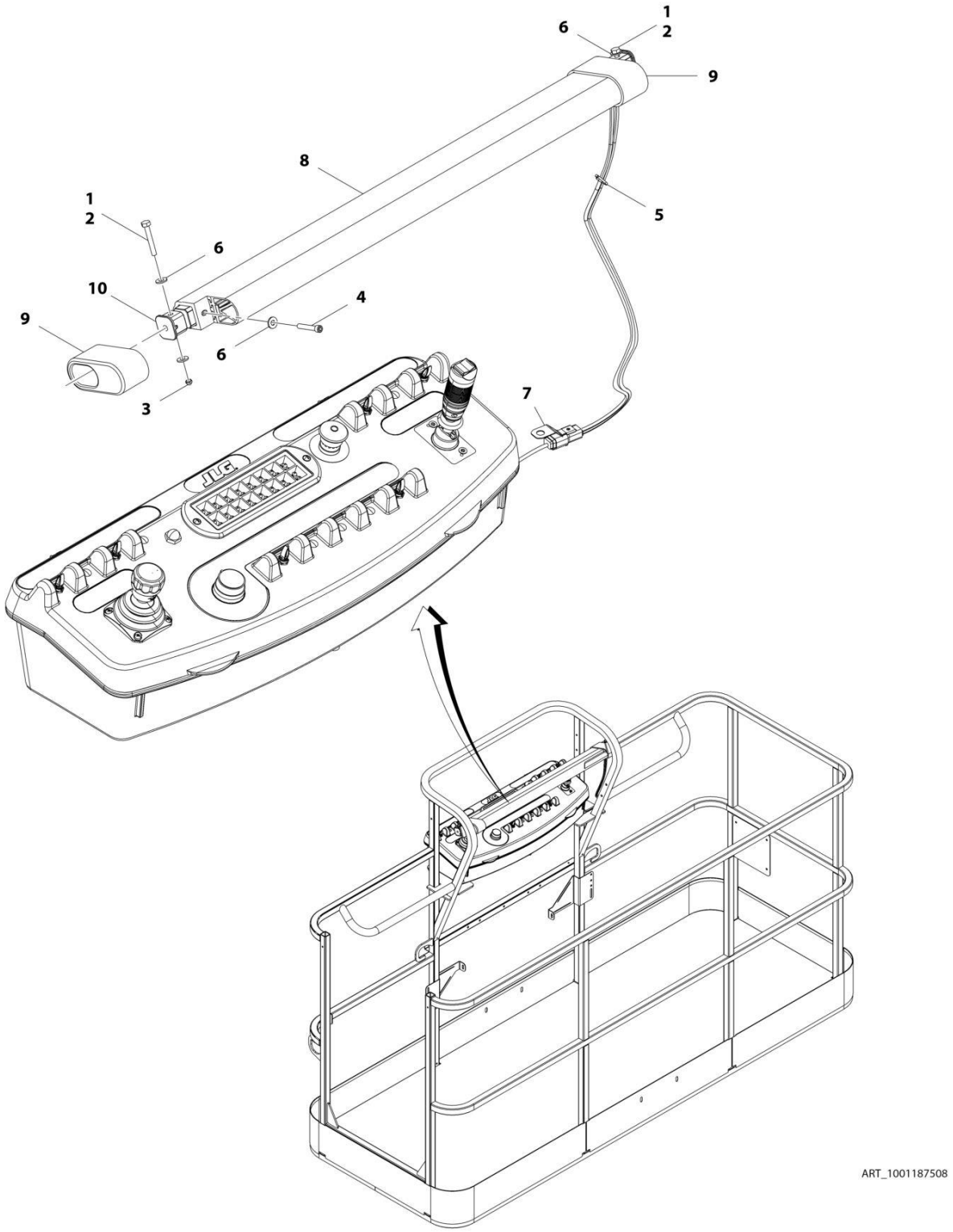

FIGURE 5-35. SKYGUARD SYSTEM INSTALLATION (SN 0300203771 through 0300259126, SN E300000100 through E300007988)

ITEM	PART NUMBER	QTY	DESCRIPTION	REV
	1001187508	Ref	SKYGUARD SYSTEM INSTALLATION	C
1	0100011	AR	Compound, Locking	
2	0641414	2	Bolt, 1/4 x 1-3/4	
3	3300430	2	Nut, Acorn 1/4	
4	3931424	AR	Capscrew, 1/4 x 1-1/2	
4	3931408	AR	Capscrew, 1/4 x 1/2	
5	4240033	AR	Tie-Strap	
6	4711400	AR	Washer, 1/4	
7	1001120328	1	Mount	
8	1001137673	1	Switch, SkyGuard Assembly	
9	1001186517	2	Cover, Platform Sensor	
10	1001188889	2	Support, Block **(SN 0300203771 through 0300244524, SN E300000100 through E300005711, SN 1300007289 through 1300007393)**	
10	1001209664	2	Support, Block **(SN 0300244525 through 0300259126, SN E300005712 through E300007988, Excluding E300007847)**	

FIGURE 5-36. SKYGUARD BAR INSTALLATION (SN 0300259127 through 0300272360)

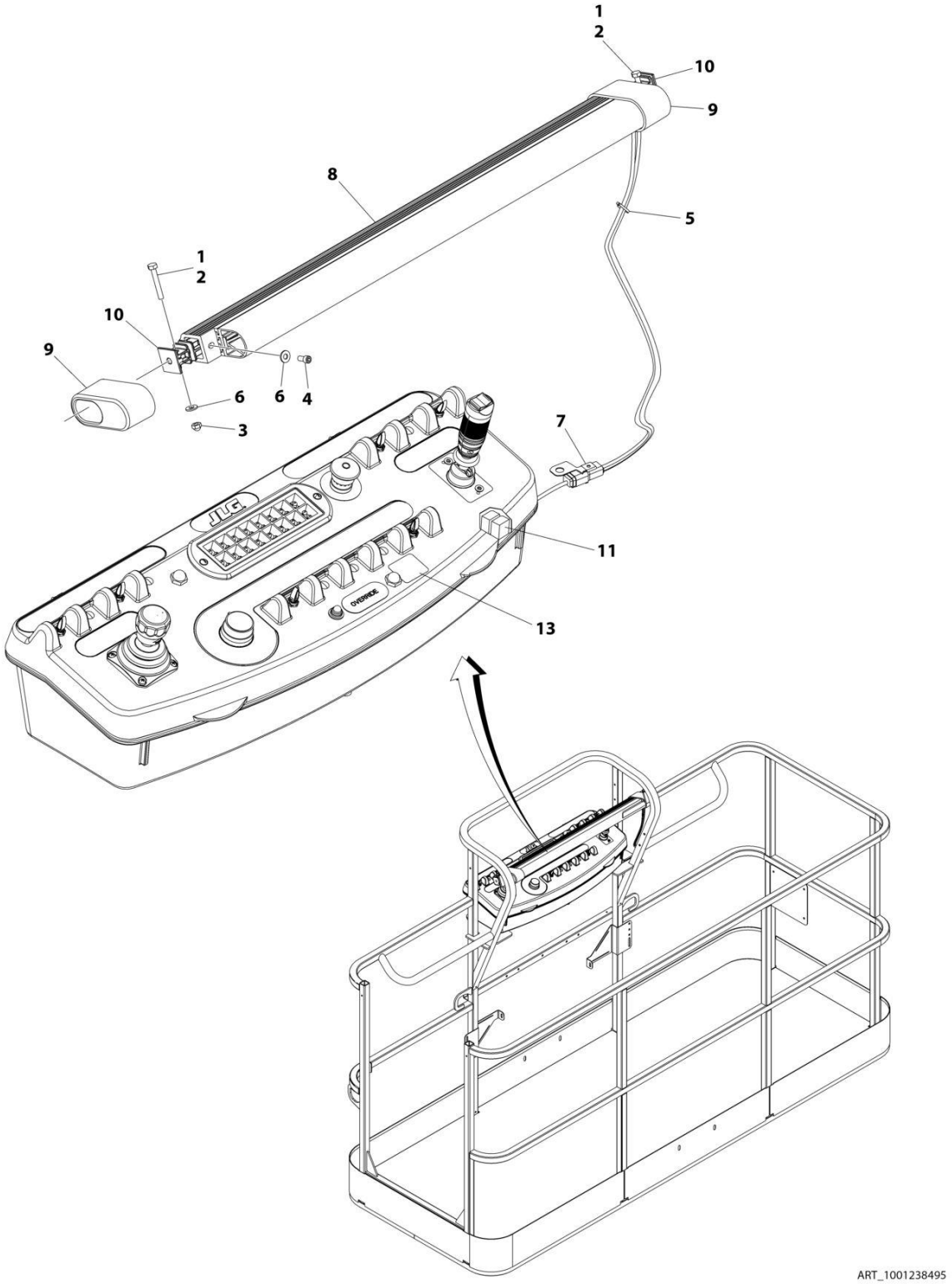

FIGURE 5-36. SKYGUARD BAR INSTALLATION (SN 0300259127 through 0300272360)

ITEM	PART NUMBER	QTY	DESCRIPTION	REV
	1001238495	Ref	SKYGUARD BAR INSTALLATION	A
1	0100011	AR	Compound, Locking	
2	0641414	2	Bolt 1/4 x 1-3/4	
3	3300430	2	Nut 1/4	
4	3931408	2	Capscrew 1/4 x 1/2	
5	4240033	8	Tie-Strap	
6	4711400	6	Washer 1/4	
7	1001120328	1	Mount	
8	1001137673	1	SkyGuard Switch Assembly	
9	1001186517	2	Cover, Platform Sensor	
10	1001209664	2	Support, Block	
11	1001186431	2	Relay	
12	1001225580	1	Interface Harness Assembly (Not Shown - Located Inside Console Box) (See Separate Breakdown in ELECTRICAL Section)	
13	1001144433	1	Decal - No Weight SkyGuard	

FIGURE 5-37. SKYEYE INSTALLATION

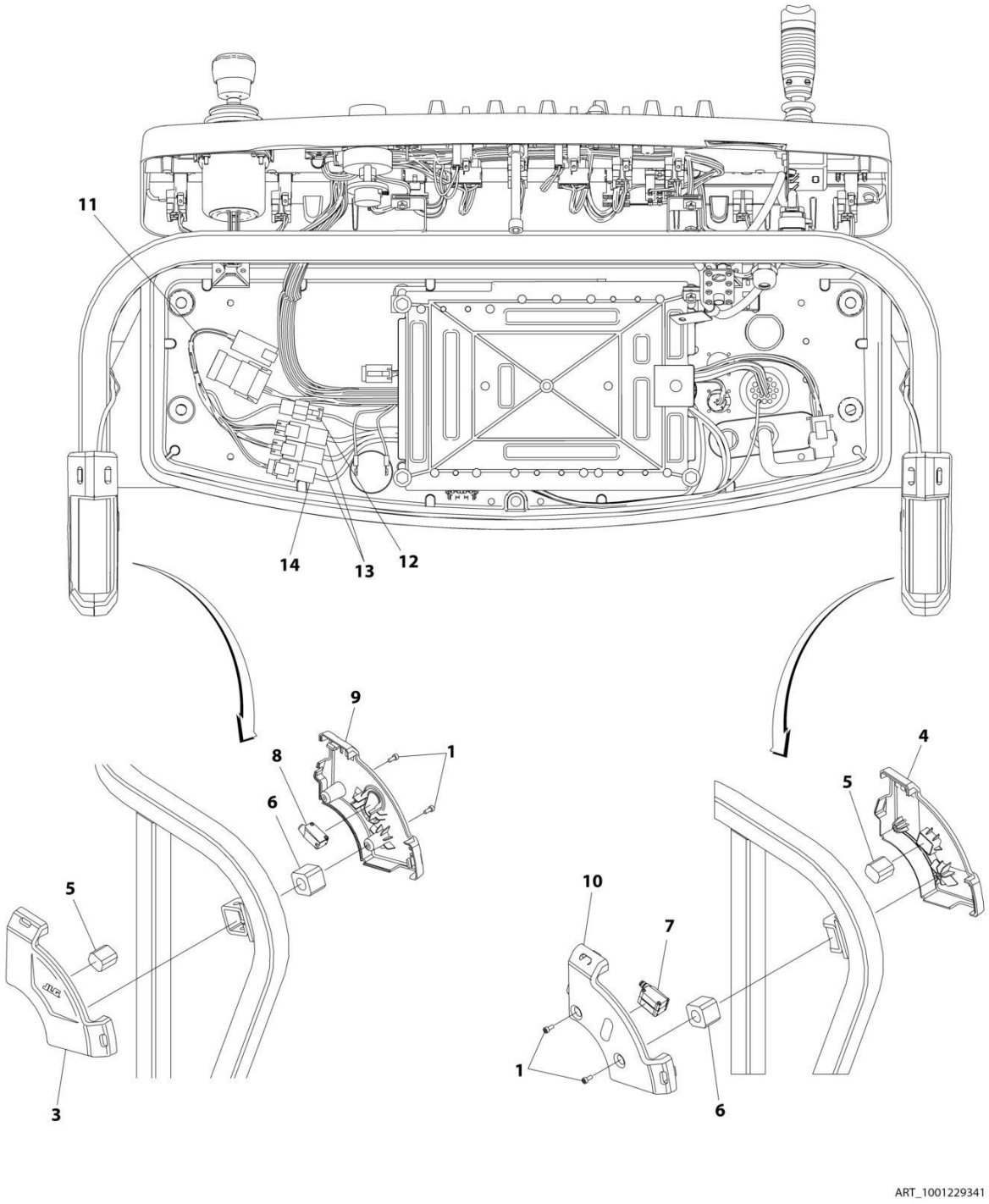

FIGURE 5-37. SKYEYE INSTALLATION

ITEM	PART NUMBER	QTY	DESCRIPTION	REV
	1001229341	Ref	SKYEYE INSTALLATION	B
1	4031505	4	Bolt M4 x 10	
2	4240033	AR	Tie-Strap (Not Shown)	
3	1001227633	1	Housing, LH Outer	
4	1001227634	1	Housing, RH Outer	
5	1001227985	2	Shim	
6	1001227987	2	Shim	
7	1001228224	2	Sensor, Receiver	
8	1001228225	1	Sensor, Emitter	
9	1001232164	1	Housing, LH Inner	
10	1001232165	1	Housing, RH Inner	
11	1001237865	1	Harness, Skyeye Intermediate (See Separate Breakdown in ELECTRICAL Section)	
12	1001238319	NLA	Harness, Skyeye Drain Jumper	
12	1001187674	1	Plug, Male - 2 Position	
12	4460942	1	Terminal	
12	4460466	1	Plug, Terminal	
12	4460508	1	Pin, Male	
13	1001237863	2	Harness, Skyeye Receiver (See Separate Breakdown in ELECTRICAL Section)	
14	1001237864	1	Harness, Skyeye Emitter (See Separate Breakdown in ELECTRICAL Section)	

FIGURE 5-38. SKYLINE INSTALLATION

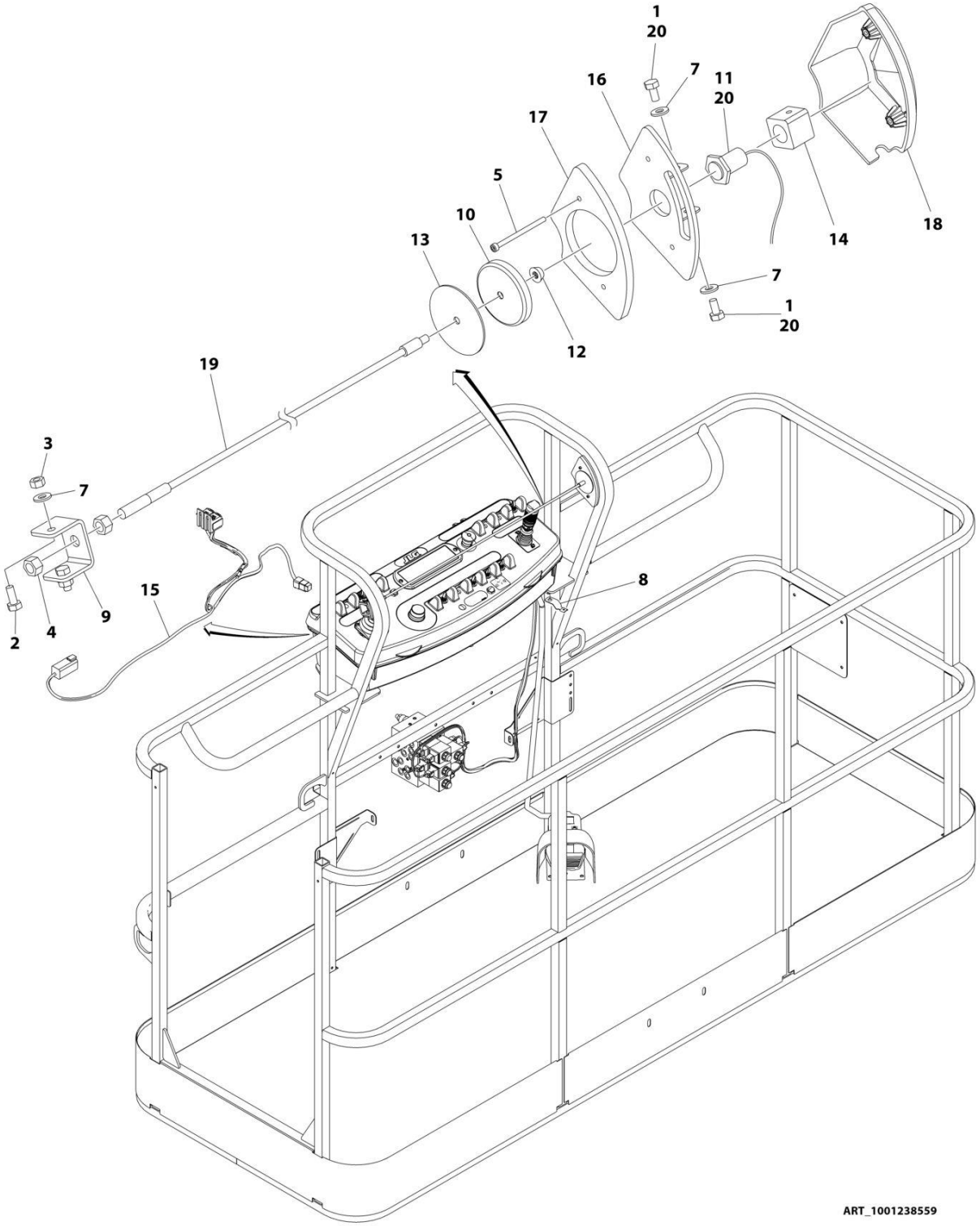

FIGURE 5-38. SKYLINE INSTALLATION

ITEM	PART NUMBER	QTY	DESCRIPTION	REV
	1001238559	Ref	SKYLINE INSTALLATION	B
1	0641404	2	Bolt 1/4 x 1/2	
2	0641405	2	Bolt 1/4 x 5/8	
3	3311405	2	Nut 1/4	
4	3311601	2	Nut 3/8	
5	4031516	2	Capscrew M4 x 60	
6	4240033	AR	Tie-Strap (Not Shown)	
7	4711400	4	Washer 1/4	
8	1001120328	1	Mount	
9	1001232642	1	Bracket	
10	1001232650	1	Magnet	
11	1001232667	1	Sensor, Proximity	
12	1001235011	1	Nut	
13	1001235013	1	Washer	
14	1001236552	1	Block	
15	1001238418	1	Harness, Skyline (See Separate Breakdown in ELECTRICAL Section)	
16	1001238472	1	Mount	
17	1001238477	1	Housing, LH	
18	1001241965	1	Housing, RH	
19	1001238824	1	Rope	
20	0100011	AR	Compound, Locking	

FIGURE 5-39. CROSS RAIL INSTALLATION

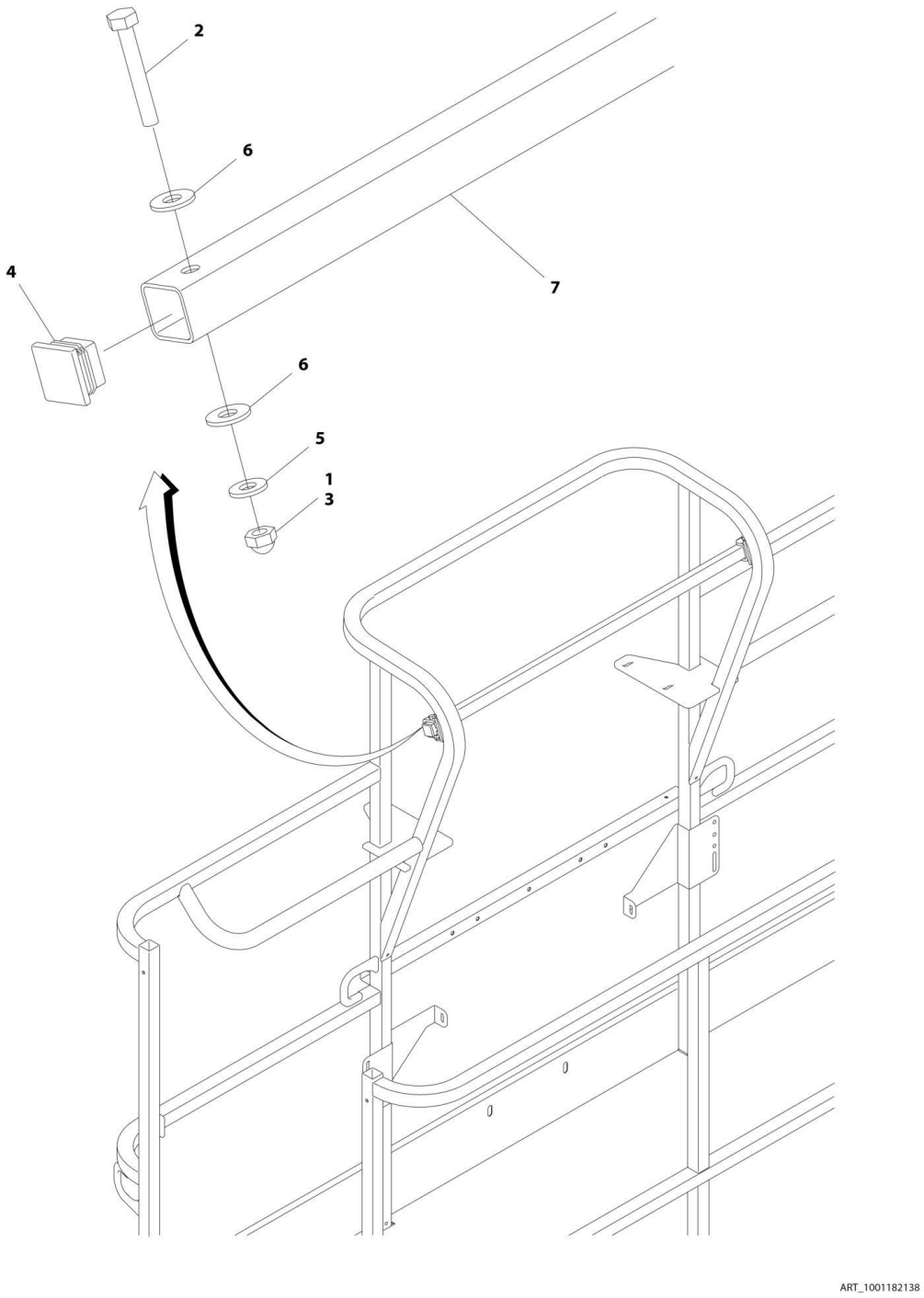

FIGURE 5-39. CROSS RAIL INSTALLATION

ITEM	PART NUMBER	QTY	DESCRIPTION	REV
	1001182138	Ref	CROSS RAIL INSTALLATION	A
1	0100071	AR	Compound, Locking	
2	0641414	2	Bolt 1/4 x 1-3/4	
3	3300430	2	Nut 1/4	
4	3520182	2	Plug	
5	4711400	2	Washer 1/4	
6	4751400	4	Washer 1/4	
7	1001191708	1	Bar	

FIGURE 5-40. SKYGLAZIER INSTALLATION

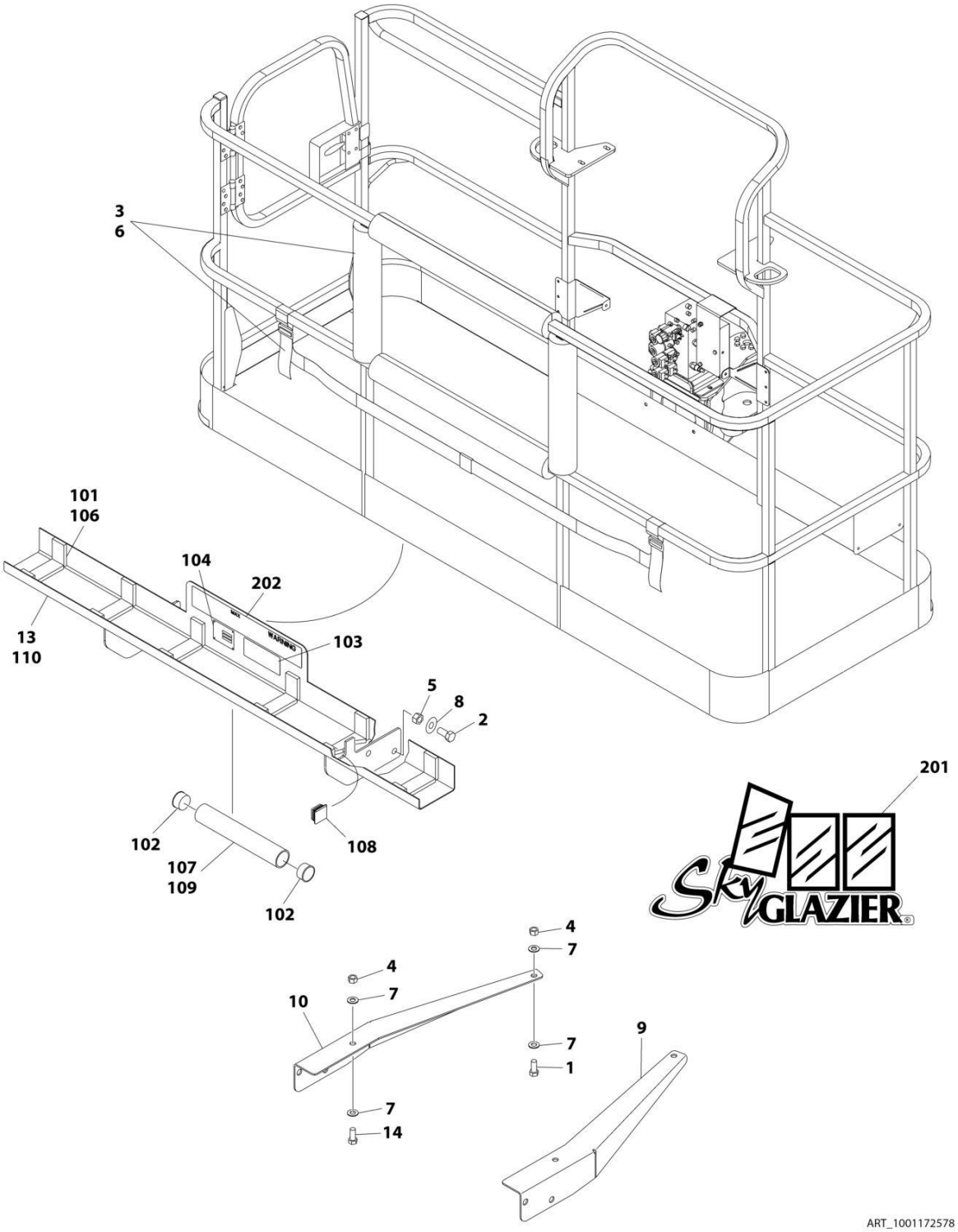

FIGURE 5-40. SKYGLAZIER INSTALLATION

ITEM	PART NUMBER	QTY	DESCRIPTION	REV
	1001172578	Ref	SKYGLAZIER INSTALLATION (ANSI, ANSI EXPORT, CE, CSA AND CHINA SPECS) (400S ONLY)	C
	1001172578	Ref	SKYGLAZIER INSTALLATION (CSA AND AUSTRALIAN SPECS) (460SJ ONLY)	C
1	0642012	2	Bolt 5/8 x 1-1/2	
2	0642212	4	Bolt 3/4 x 1-1/2	
3	2902212	1	Bumpers and Strap Kit	
3	0940102	1	Bumper Only	
3	4240149	1	Strap Only	
4	3312005	4	Nut 5/8	
5	3312205	4	Nut 3/4	
6	4420014	AR	Tape	
7	4712000	6	Washer 5/8	
8	4712200	8	Washer 3/4	
9	1001099366	1	Support	
10	1001099367	1	Support	
13	1001172577	1	Tray Assembly (All Spec except Brazil and Latin American Specs) (See Items 101-110 for Breakdown)	
14	8310129	2	Bolt 5/8 x 2-1/2	
	1001172577	Ref	TRAY ASSEMBLY	B
101	0100081	AR	Adhesive	
102	1120555	2	Cap, Tube	
103	1701509	2	Decal - Manual	
104	See Note	NSS	Nameplate - Serial Number (Note: Not Available for Purchase)	
106	3340956	1	Pad Kit	
107	3460334	1	Tube	
108	3520071	2	Plug	
109	4420066	AR	Tape, Double Sided	
110	4846562	1	Weldment	
	1001172570	Ref	SKYGLAZIER DECAL INSTALLATION (ANSI AND CSA SPECS) (ENGLISH DECALS) (AVAILABLE ON 400S & 460SJ)	C
	1001172571	Ref	SKYGLAZIER DECAL INSTALLATION (ANSI EXPORT AND CHINA SPECS) (SPANISH DECALS) (AVAILABLE ON 400S ONLY)	B
	1001172572	Ref	SKYGLAZIER DECAL INSTALLATION (ANSI EXPORT AND CHINA SPECS) (PORTUGUESE DECALS) (AVAILABLE ON 400S ONLY)	B
	1001172573	Ref	SKYGLAZIER DECAL INSTALLATION (CE SPEC) (FRENCH DECALS) (AVAILABLE ON 400S ONLY)	B
	1001172574	Ref	SKYGLAZIER DECAL INSTALLATION (CE SPEC) (GERMAN DECALS) (AVAILABLE ON 400S ONLY)	B
	1001172575	Ref	SKYGLAZIER DECAL INSTALLATION (CE SPEC) (ITALIAN DECALS) (AVAILABLE ON 400S ONLY)	B
	1001172576	Ref	SKYGLAZIER DECAL INSTALLATION (CE SPEC) (UK DECALS) (AVAILABLE ON 400S ONLY)	B
	1001172620	Ref	SKYGLAZIER DECAL INSTALLATION (AUSTRALIAN SPEC) (AUSTRALIAN DECALS) (AVAILABLE ON 460SJ ONLY)	C
	1001193135	Ref	SKYGLAZIER DECAL INSTALLATION (CE SPEC) (SPANISH DECALS) (AVAILABLE ON 400S ONLY)	B
	1001193136	Ref	SKYGLAZIER DECAL INSTALLATION (CE SPEC) (PORTUGUESE DECALS) (AVAILABLE ON 400S ONLY)	B
201	1705358	2	Decal - SkyGlazier Capacity	
202	1001199035	2	Decal - SkyGlazier Capacity (ANSI and CSA Specs) (English)	

ITEM	PART NUMBER	QTY	DESCRIPTION	REV
202	1001172564	2	Decal - SkyGlazier Capacity (ANSI Export Spec) (Spanish)	
202	1001172565	2	Decal - SkyGlazier Capacity (ANSI Export Spec) (Portuguese)	
202	1001172566	2	Decal - SkyGlazier Capacity (CE Spec) (French)	
202	1001172567	2	Decal - SkyGlazier Capacity (CE Spec) (German)	
202	1001172568	2	Decal - SkyGlazier Capacity (CE Spec) (Italian)	
202	1001172569	2	Decal - SkyGlazier Capacity (CE Spec) (UK)	
202	1001199036	2	Decal - SkyGlazier Capacity (Australian Spec) (Australian)	
202	1001193133	2	Decal - SkyGlazier Capacity (CE Spec) (Spanish)	
202	1001193134	2	Decal - SkyGlazier Capacity (CE Spec) (Portuguese)	

FIGURE 5-41. SKYWELDER INSTALLATION (50HZ)

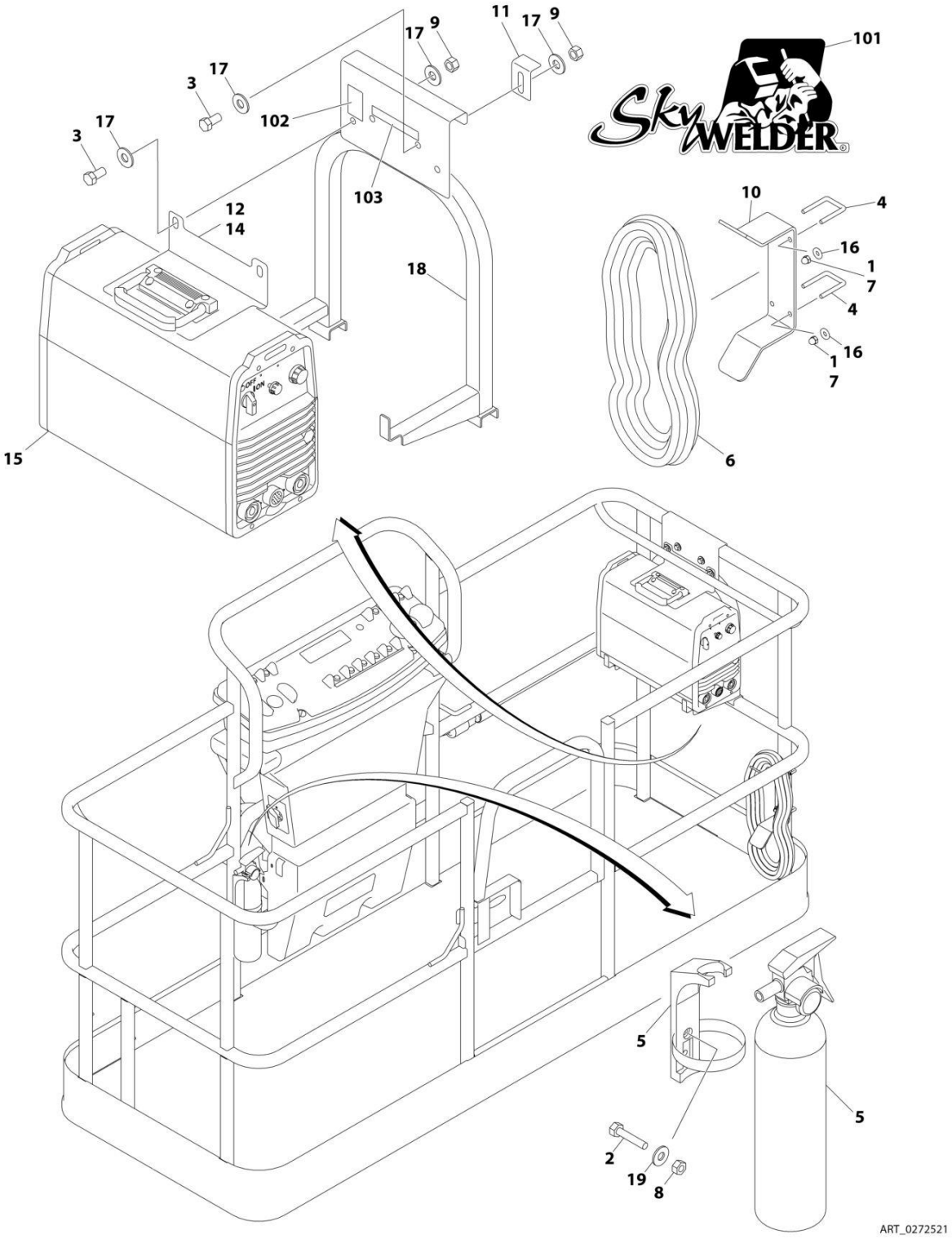

FIGURE 5-41. SKYWELDER INSTALLATION (50HZ)

ITEM	PART NUMBER	QTY	DESCRIPTION	REV
	0272521	Ref	SKYWELDER INSTALLATION (50HZ)	F
		Ref	Note: ANSI Export, Australian, CE and Japanese Specs Only.	
1	0100011	AR	Compound, Locking	
2	0630518	2	Screw #10 x 3/4	
3	0641606	4	Bolt 3/8 x 3/4	
4	1320302	2	U-Clamp	
5	2030010	1	Extinguisher, Fire	
6	2902217	1	Weld Leads Kit	
7	3300151	4	Nut 1/4	
8	3311005	2	Nut #10	
9	3311605	4	Nut 3/8	
10	3573400	1	Bracket	
11	3577121	2	Angle	
12	3573642	1	Plate	
13	4240099	AR	Tie-Strap (Not Shown)	
14	4420037	AR	Tape	
15	4530028	1	Welder Assembly (See WELDER ASSEMBLY for Breakdown)	
16	4751400	4	Washer 1/4	
17	4751600	8	Washer 3/8	
18	4846627	1	Support	
19	4751000	2	Washer #10	
	0272588	Ref	SKYWELDER DECAL INSTALLATION	B
101	1705355	2	Decal - SkyWelder	
102	1705305	1	Decal - Weld Lead	
103	1705466	1	Decal - Weight **(SN 0300203771 through 0300233533, SN E300000100 through E300004808)**	
103	1001228988	1	Decal - Weight **(SN 0300233534 through 0300272360, SN E300004809 through E300007988, SN 1300007289 through 1300007393, Except SN 0300272174 through 0300272184, Excluding E300007847)**	

FIGURE 5-42. SKYWELDER INSTALLATION (60HZ)

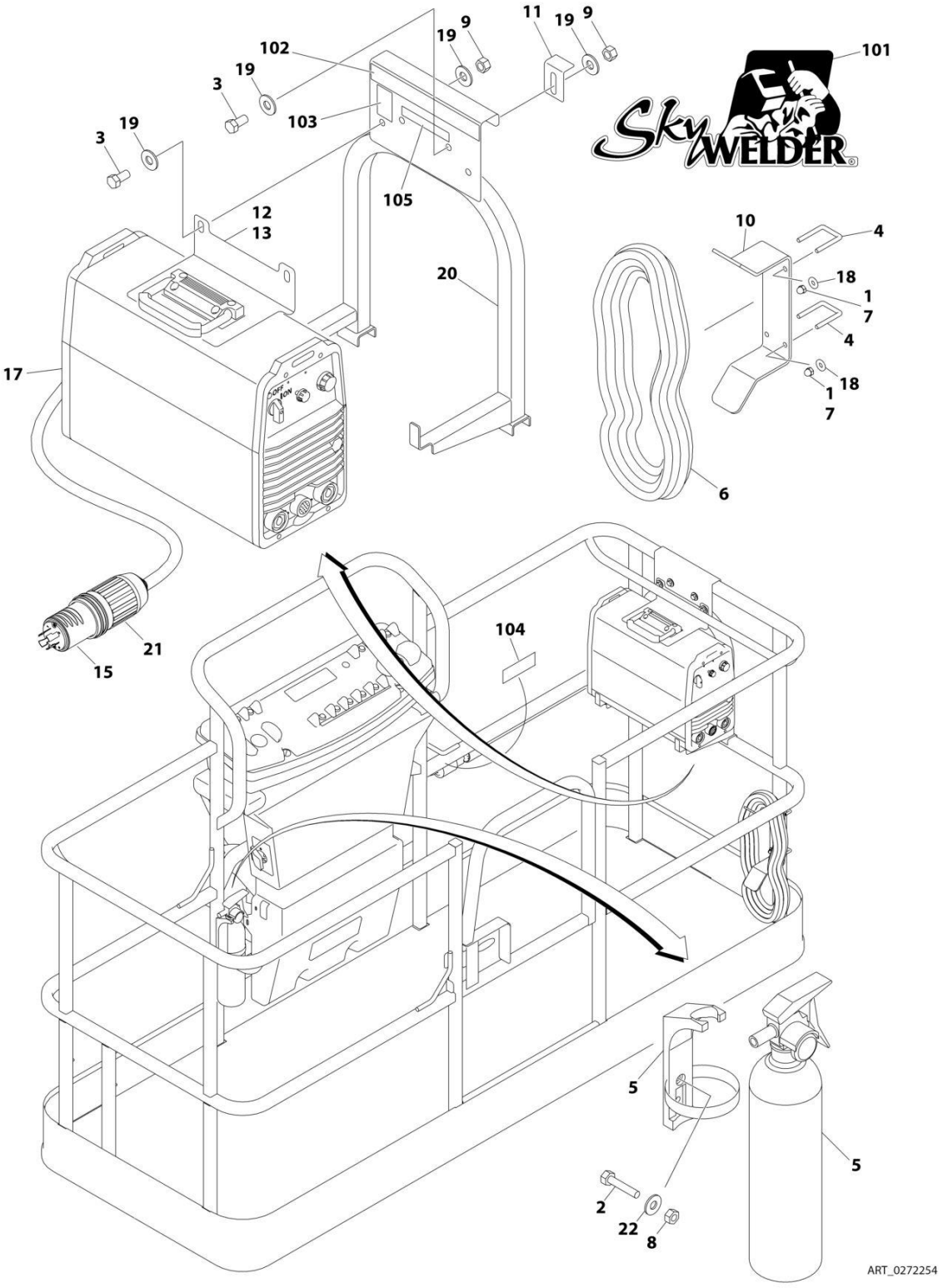

FIGURE 5-42. SKYWELDER INSTALLATION (60HZ)

ITEM	PART NUMBER	QTY	DESCRIPTION	REV
	0272254	Ref	SKYWELDER INSTALLATION (60HZ)	I
		Ref	Note: ANSI, ANSI Export and CSA Specs Only.	
1	0100011	AR	Compound, Locking	
2	0630518	2	Screw #10 x 3/4	
3	0641606	4	Bolt 3/8 x 3/4	
4	1320302	2	U-Clamp	
5	2030010	1	Extinguisher, Fire	
6	2902217	1	Weld Leads Kit	
7	3300151	4	Nut 1/4	
8	3311005	2	Nut #10	
9	3311605	4	Nut 3/8	
10	3573400	1	Bracket	
11	3577121	2	Angle	
12	3573642	1	Plate	
13	4420037	AR	Tape	
14	4240099	AR	Tie-Strap (Not Shown)	
15	4460962	1	Plug, Male Twistlock	
17	4530028	1	Welder Assembly (See WELDER ASSEMBLY for Breakdown)	
18	4751400	4	Washer 1/4	
19	4751600	8	Washer 3/8	
20	4846627	1	Support	
21	1671093	1	Cover, Plug	
22	4751000	2	Washer #10	
	0272448	Ref	SKYWELDER DECAL INSTALLATION	B
101	1705355	2	Decal - SkyWelder	
102	1702868	1	Decal - No Hands	
103	1705305	1	Decal - Weld Lead	
104	1705375	1	Decal - 240V - 3 Phase - 60Hz	
105	1705466	1	Decal - Weight **(SN 0300203771 through 0300233533)**	
105	1001228988	1	Decal - Weight **(SN 0300233534 through 0300272360, Except SN 0300272174 through 0300272184)**	

FIGURE 5-43. SKYWELDER PREP PACKAGE (60HZ)

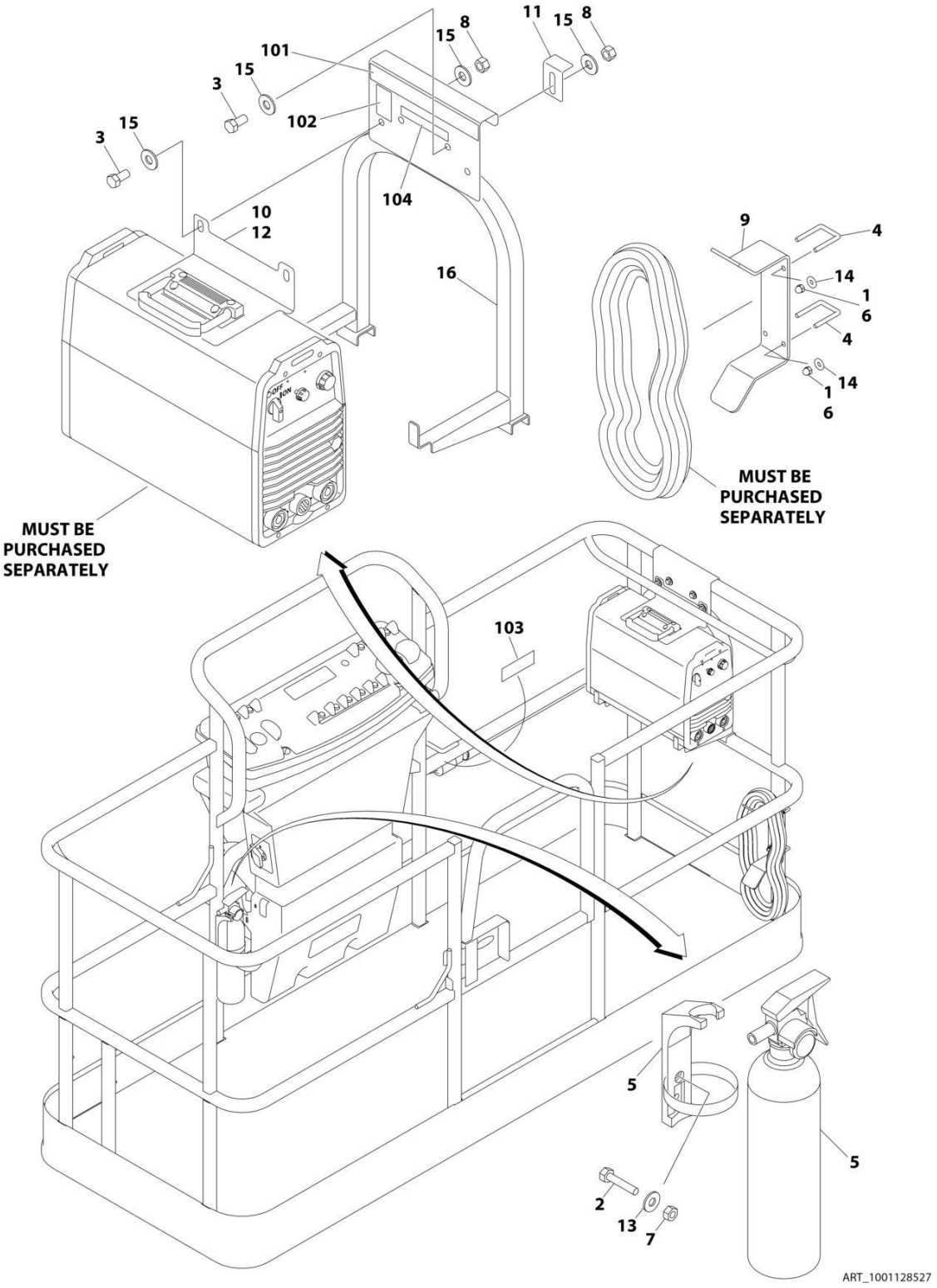

FIGURE 5-43. SKYWELDER PREP PACKAGE (60HZ)

ITEM	PART NUMBER	QTY	DESCRIPTION	REV
	1001128527	Ref	SKYWELDER PREP PACKAGE (60HZ)	B
		Ref	Note: ANSI, ANSI Export and CSA Specs Only.	
1	0100011	AR	Compound, Locking	
2	0630518	2	Screw #10 x 3/4	
3	0641606	4	Bolt 3/8 x 3/4	
4	1320302	2	U-Clamp	
5	2030010	1	Extinguisher, Fire	
6	3300151	4	Nut 1/4	
7	3311005	2	Nut #10	
8	3311605	4	Nut 3/8	
9	3573400	1	Bracket	
10	3573642	1	Plate	
11	3577121	2	Angle	
12	4420037	AR	Tape	
13	4751000	2	Washer #10	
14	4751400	4	Washer 1/4	
15	4751600	8	Washer 3/8	
16	4846627	1	Support	
	1001128556	Ref	SKYWELDER DECAL INSTALLATION	B
101	1702868	1	Decal - No Hands	
102	1705305	1	Decal - Weld Lead	
103	1705375	1	Decal - 240V - 3 Phase - 60Hz	
104	1705466	1	Decal - Weight **(SN 0300203771 through 0300233533)**	
104	1001228988	1	Decal - Weight **(SN 0300233534 through 0300272360, Except SN 0300272174 through 0300272184)**	

FIGURE 5-44. WELDER ASSEMBLY

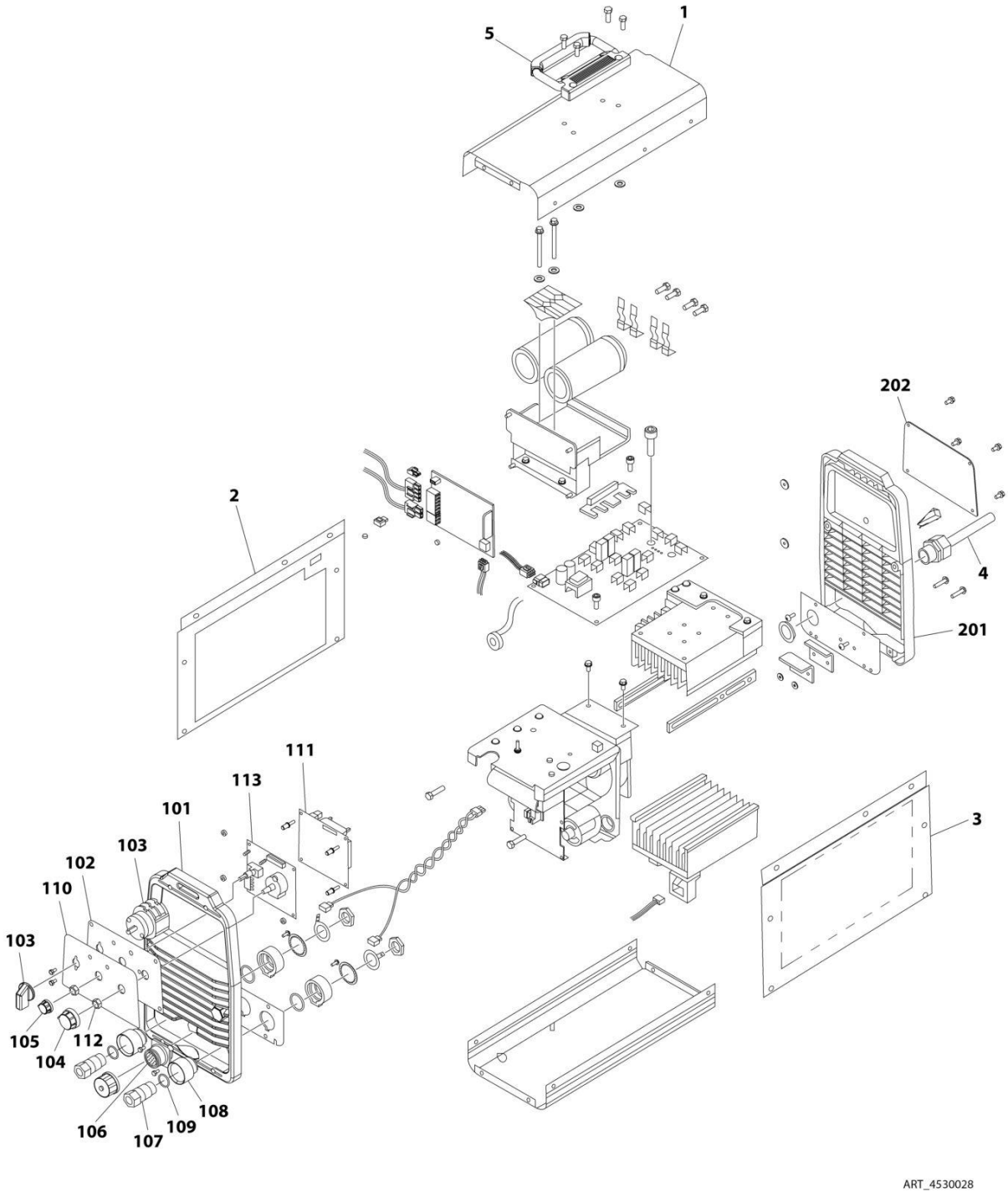

FIGURE 5-44. WELDER ASSEMBLY

ITEM	PART NUMBER	QTY	DESCRIPTION	REV
	4530028	Ref	WELDER ASSEMBLY	B
		Ref	Note: For Other Components, contact your Miller Welder Dealer.	
1	7027773	1	Cover, Top	
1	7027774	1	Decal - Static Precautionary Warning	
2	See Note	NSS	Panel, LH Side (Note: Part of Item 1. Purchase Item 1)	
3	See Note	NSS	Panel, RH Side (Note: Part of Item 1. Purchase Item 1)	
4	7024467	1	Cable, Power	
4	7027775	1	Decal - Electrical Shock Warning (Not Shown)	
5	7027776	1	Handle, Carrying	
101	7024462	1	Panel, Front	
102	7024463	1	Panel, Console	
103	7024469	1	Switch with Lead	
104	7024470	1	Knob	
105	7024471	1	Knob	
106	7024472	1	Receptacle with Leads and Plugs	
107	7024473	2	Receptacle, Twistlock Female	
108	7024474	2	Insulator	
109	7024475	2	O-Ring	
110	7027777	1	Nameplate	
111	7027779	1	Circuit Card Assembly (Process Control)	
112	7024478	2	Nut	
113	7027778	1	Circuit Card Assembly (Operator Interface)	
201	7024462	1	Panel, Rear	
202	7027780	1	Panel, Cover	

SECTION 6 - CYLINDER

SECTION 6 - CYLINDER

FIGURE 6-1. AXLE LOCKOUT CYLINDER ASSEMBLY

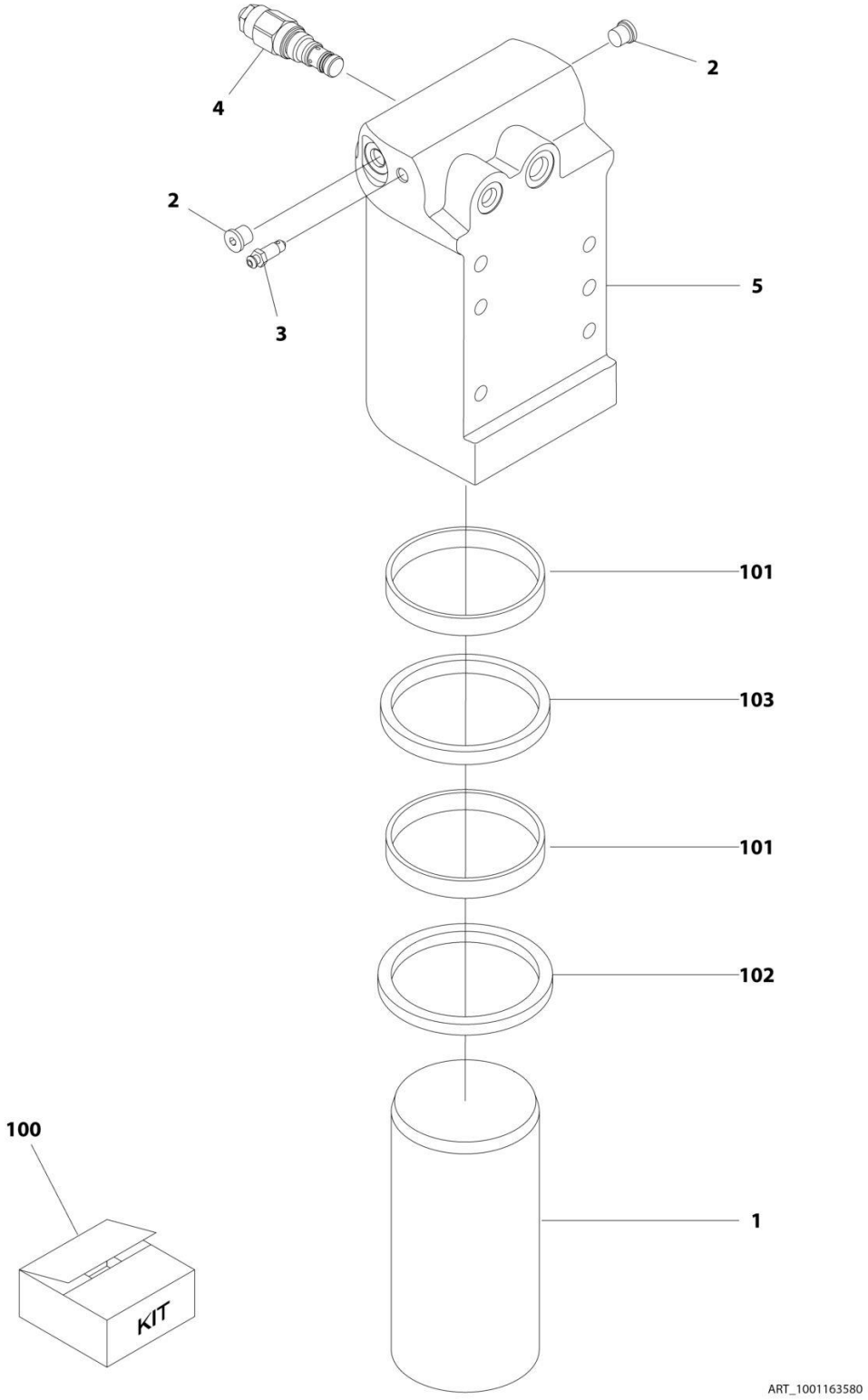

FIGURE 6-1. AXLE LOCKOUT CYLINDER ASSEMBLY

ITEM	PART NUMBER	QTY	DESCRIPTION	REV
	1001163580	Ref	AXLE LOCKOUT CYLINDER ASSEMBLY	H
4	1001117372	1	Cartridge, Valve	
		Ref	Note: Original Cylinder May Have Been Replaced with Service Replacement. Identify PN Stamped on Cylinder Before Ordering Parts.	
1	1684290	1	Rod	
2	2220883	2	Plug #4	
3	4640858	1	Valve, Bleeder	
4	1001245454	1	Valve, Counter Balance	
5	1001164817	1	Barrel	
100	2902266	1	Seal Kit - 1001163590 Cylinder (Includes Items 101-103)	
101	See Note	NSS	Ring, Wear	
102	See Note	NSS	Seal	
103	See Note	NSS	Wiper	

FIGURE 6-2. LEVEL (PLATFORM SLAVE) CYLINDER ASSEMBLY

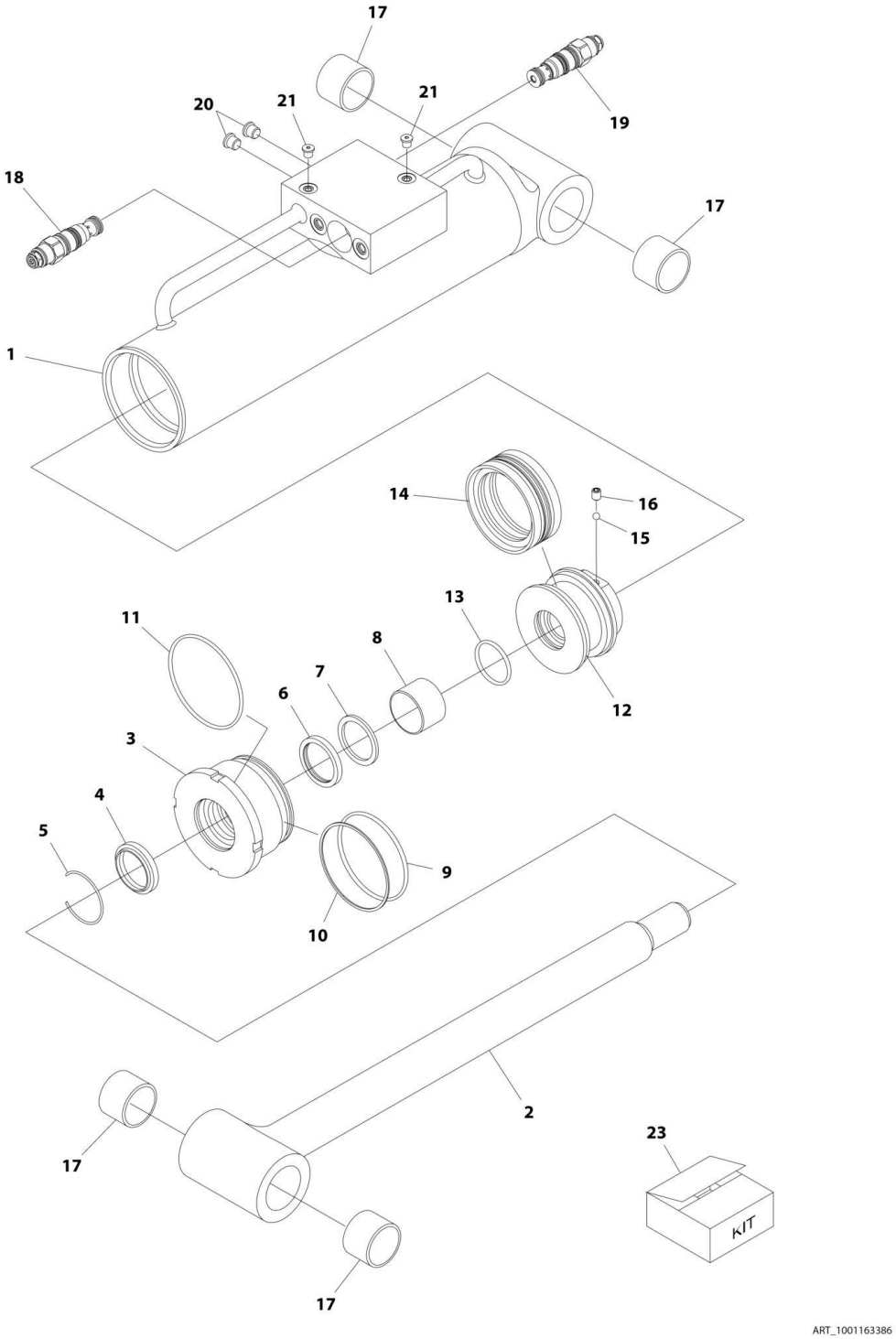

FIGURE 6-2. LEVEL (PLATFORM SLAVE) CYLINDER ASSEMBLY

ITEM	PART NUMBER	QTY	DESCRIPTION	REV
	1001163386	Ref	LEVEL (PLATFORM SLAVE) CYLINDER ASSEMBLY	G
		Ref	Note: Original Cylinder May Have Been Replaced with Service Replacement. Identify PN Stamped on Cylinder Before Ordering Parts.	
1	70005147	1	Barrel	
2	70005148	1	Rod	
3	70005142	1	Head	
4	See Note	NSS	Wiper (Note: Use Item 23)	
5	70002373	1	Ring, Retaining	
6	See Note	NSS	Seal, Rod (Note: Use Item 23)	
7	See Note	NSS	Ring, Back-up (Note: Use Item 23)	
8	70005143	1	Bearing, Dry	
9	See Note	NSS	O-Ring (Note: Use Item 23)	
10	See Note	NSS	Ring, Back-up (Note: Use Item 23)	
11	See Note	NSS	O-Ring (Note: Use Item 23)	
12	70005144	1	Piston	
13	See Note	NSS	O-Ring (Note: Use Item 23)	
14	See Note	NSS	Seal, Piston (Note: Use Item 23)	
15	70022564	1	Ball	
16	70023369	1	Setscrew	
17	70005145	4	Bearing	
18	1001168209	1	Cartridge, Valve	
18	2900770	1	Seal Kit - 1001168209 Valve	
19	1001168210	1	Cartridge, Valve	
19	2900770	1	Seal Kit - 1001168210 Valve	
20	70023370	1	Plug 7/16	
21	2220881	1	Plug, O-Ring 5/16	
23	70005149	1	Seal Kit - 1001163386 Cylinder (Includes Items 4, 6, 7, 9, 10, 11, 13 & 14)	

FIGURE 6-3. LIFT CYLINDER ASSEMBLY - MAIN BOOM (SN 0300203771 through 0300204034)

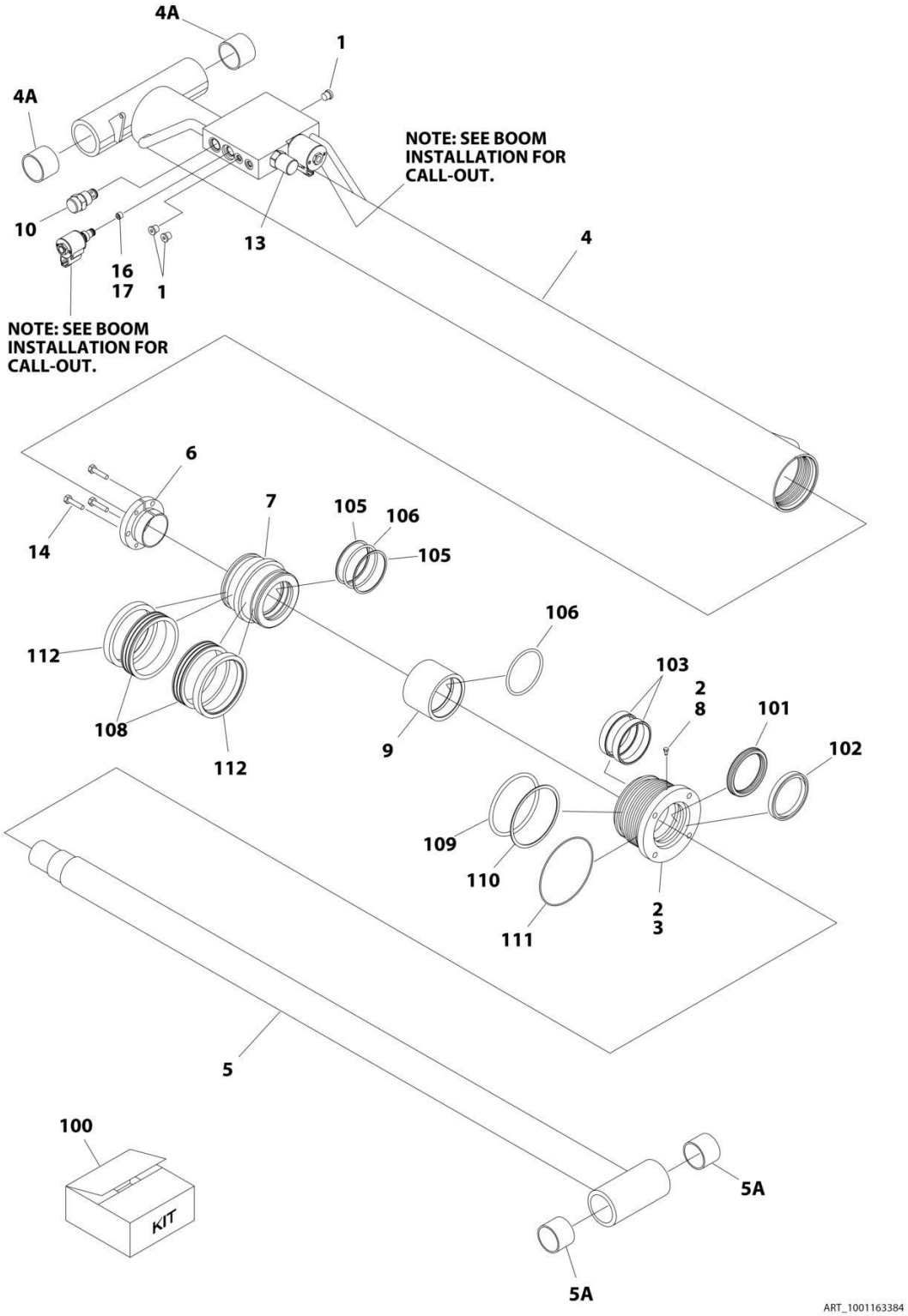

FIGURE 6-3. LIFT CYLINDER ASSEMBLY - MAIN BOOM (SN 0300203771 through 0300204034)

ITEM	PART NUMBER	QTY	DESCRIPTION	REV
	1001163384	Ref	LIFT CYLINDER ASSEMBLY - MAIN BOOM **(SN 0300203771 through 0300204034)**	F
		Ref	Note: Original Cylinder May Have Been Replaced with Service Replacement. Identify PN Stamped on Cylinder Before Ordering Parts.	
1	2220883	3	Plug #4	
2	3020043	AR	Lubricant, Anti-Seize	
3	1001164582	1	Head, Cylinder	
4	1001164578	1	Barrel	
4A	0961950	2	Bearing	
5	1001164583	1	Rod	
5A	0961950	2	Bearing	
6	0961897	1	Bushing	
7	3480211	1	Piston	
8	1001125137	1	Screw #8	
9	1001164596	1	Spacer	
10	4641390	1	Cartridge, Check Valve	
10	7017496	1	Seal Kit - 4641390 Valve	
13	1001165131	1	Cartridge, Valve	
13	7012925	1	Seal Kit - 1001165131 Valve	
14	0641409	3	Bolt 1/4 x 1-1/8	
16	0100035	1	Compound, Locking	
17	1001170759	1	Orifice 0.047	
100	1001164585	1	Seal Kit - 1001163384 Cylinder (Includes Items 101-112)	
101	See Note	NSS	Seal, Rod (Note: Use Item 100)	
102	See Note	NSS	Wiper (Note: Use Item 100)	
103	See Note	NSS	Ring, Wear (Note: Use Item 100)	
105	See Note	NSS	Ring, Back-up (Note: Use Item 100)	
106	See Note	NSS	Seal (Note: Use Item 100)	
108	See Note	NSS	Ring, Lock (Note: Use Item 100)	
109	See Note	NSS	O-Ring (Note: Use Item 100)	
110	See Note	NSS	Ring, Back-up (Note: Use Item 100)	
111	See Note	NSS	O-Ring (Note: Use Item 100)	
112	See Note	NSS	Ring, Lock (Note: Use Item 100)	

FIGURE 6-4. LIFT CYLINDER ASSEMBLY - MAIN BOOM (SN 0300204035 through 0300226846, SN E300000100 through E3000004457)

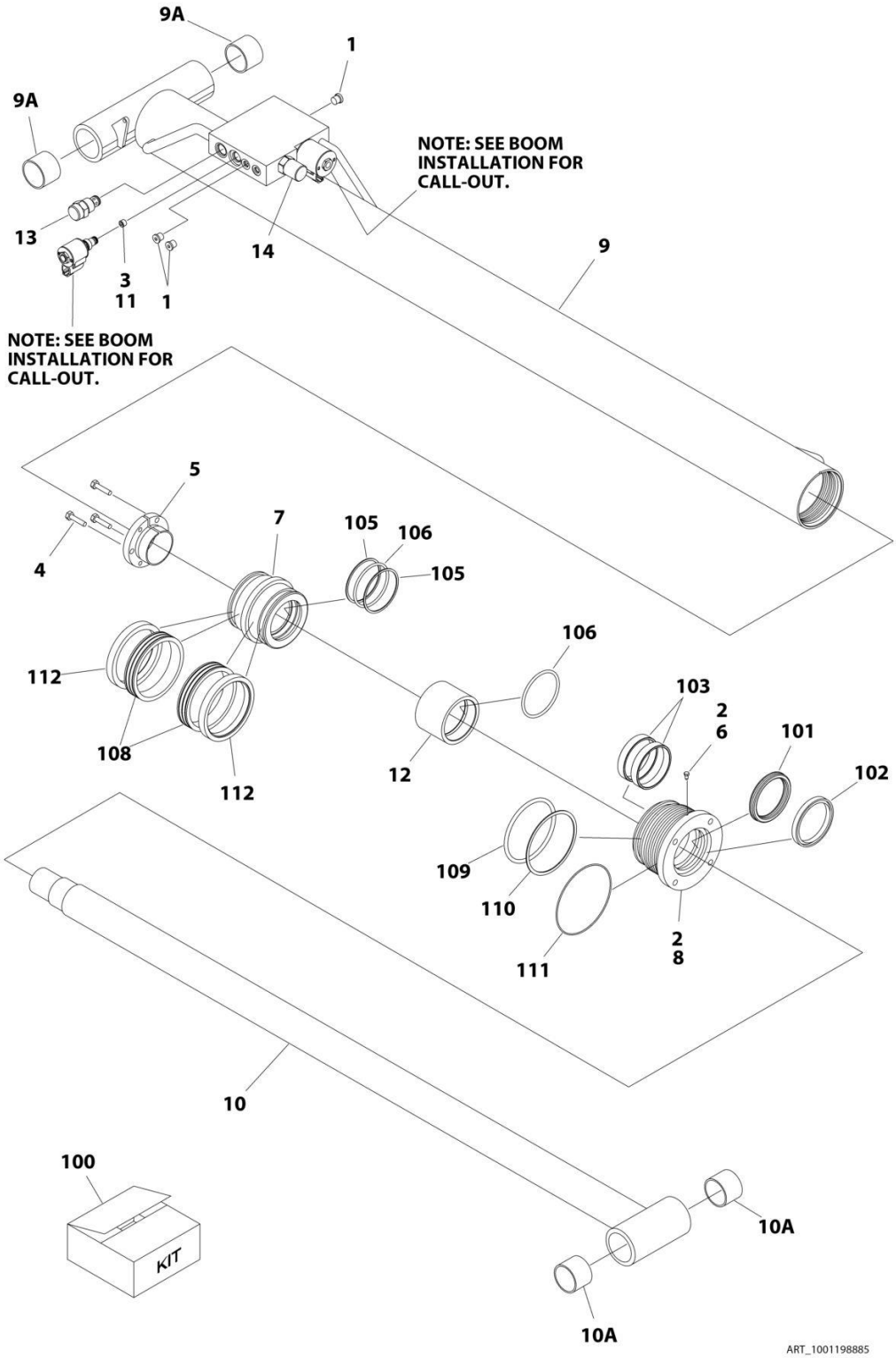

FIGURE 6-4. LIFT CYLINDER ASSEMBLY - MAIN BOOM (SN 0300204035 through 0300226846, SN E300000100 through E3000004457)

ITEM	PART NUMBER	QTY	DESCRIPTION	REV
	1001198885	Ref	LIFT CYLINDER ASSEMBLY - MAIN BOOM **(SN 0300204035 through 0300226846, SN E300000100 through E3000004457)**	E
		Ref	Note: Original Cylinder May Have Been Replaced with Service Replacement. Identify PN Stamped on Cylinder Before Ordering Parts.	
1	2220883	3	Plug #4	
2	3020043	AR	Lubricant, Anti-Seize	
3	0100035	1	Compound, Locking	
4	0641409	3	Bolt 1/4 x 1-1/8	
5	0961897	1	Bushing	
6	1001125137	1	Screw #8	
7	3480211	1	Piston	
8	1001164582	1	Head, Cylinder	
9	1001164578	1	Barrel	
9A	0961950	2	Bearing	
10	1001164583	1	Rod	
10A	0961950	2	Bearing	
11	1001170759	1	Orifice 0.047	
12	1001198886	1	Spacer	
13	4641390	1	Cartridge, Check Valve	
13	7017496	1	Seal Kit - 4641390 Valve	
14	1001165131	1	Cartridge, Valve **(SN 0300203771 through 0300210552)**	
14	7012925	1	Seal Kit - 1001165131 Valve **(SN 0300203771 through 0300210552)**	
14	1001203628	1	Cartridge, Valve **(SN 0300210552 through 0300272360, Except SN 0300272174 through 0300272184)**	
14	7012925	1	Seal Kit - 1001203628 Valve **(SN 0300210552 through 0300272360, Except SN 0300272174 through 0300272184)**	
100	1001164585	1	Seal Kit - 1001163384 Cylinder (Includes Items 101-112)	
101	See Note	NSS	Seal, Rod (Note: Use Item 100)	
102	See Note	NSS	Wiper (Note: Use Item 100)	
103	See Note	NSS	Ring, Wear (Note: Use Item 100)	
105	See Note	NSS	Ring, Back-up (Note: Use Item 100)	
106	See Note	NSS	Seal (Note: Use Item 100)	
108	See Note	NSS	Ring, Lock (Note: Use Item 100)	
109	See Note	NSS	O-Ring (Note: Use Item 100)	
110	See Note	NSS	Ring, Back-up (Note: Use Item 100)	
111	See Note	NSS	O-Ring (Note: Use Item 100)	
112	See Note	NSS	Ring, Lock (Note: Use Item 100)	

FIGURE 6-5. LIFT CYLINDER ASSEMBLY - MAIN BOOM (SN 0300226847 through 0300243703, SN E3000004458 through E300005607)

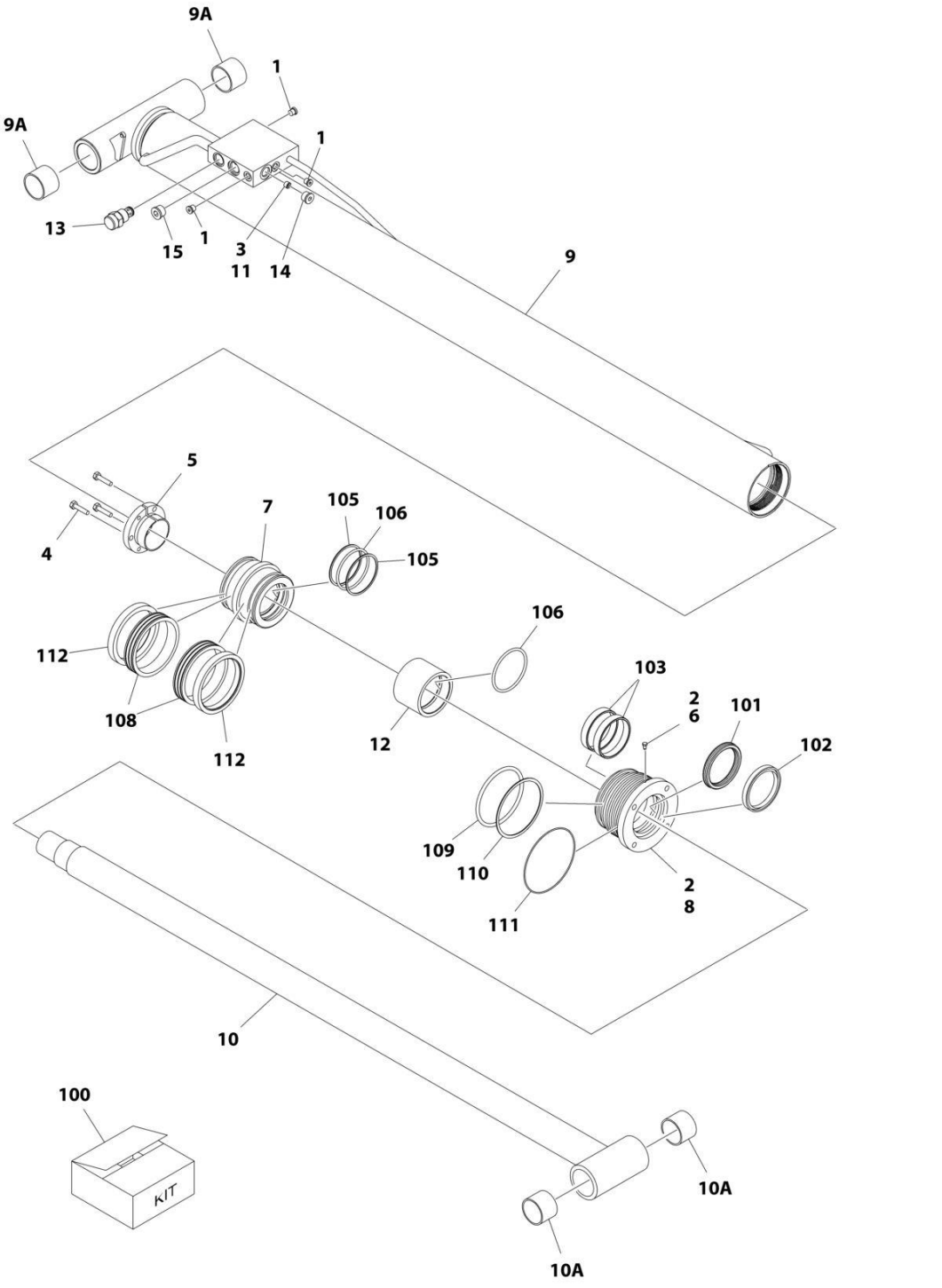

FIGURE 6-5. LIFT CYLINDER ASSEMBLY - MAIN BOOM (SN 0300226847 through 0300243703, SN E3000004458 through E300005607)

ITEM	PART NUMBER	QTY	DESCRIPTION	REV
	1001206321	Ref	LIFT CYLINDER ASSEMBLY - MAIN BOOM	C
		Ref	Note: Original Cylinder May Have Been Replaced with Service Replacement. Identify PN Stamped on Cylinder Before Ordering Parts.	
1	2220883	3	Plug #4	
2	3020043	AR	Lubricant, Anti-Seize	
3	0100035	AR	Compound, Locking	
4	0641409	3	Bolt 1/4 x 1-1/8	
5	0961897	1	Bushing	
6	1001125137	1	Screw #8	
7	3480211	1	Piston	
8	1001164582	1	Head, Cylinder	
9	1001206442	1	Barrel	
9A	0961950	2	Bearing	
10	1001164583	1	Rod	
10A	0961950	2	Bearing	
11	2180380	1	Orifice 0.06 **(SN 0300226847 through 0300234499, SN E300004458 through E300004936, SN 1300007289 through 1300007393)**	
11	1001170759	1	Orifice 0.047 **(SN 0300234500 through 0300243703, SN E300004937 through E300005607)**	
12	1001198886	1	Spacer	
13	4641390	1	Cartridge, Check Valve	
13	7017496	1	Seal Kit - 4641390 Valve	
14	2220886	1	Plug	
15	2220887	1	Adapter	
100	1001164585	1	Seal Kit - 1001206321 Cylinder (Includes Item 101-112)	
101	See Note	NSS	Seal, Rod (Note: Use Item 100)	
102	See Note	NSS	Wiper (Note: Use Item 100)	
103	See Note	NSS	Ring, Wear (Note: Use Item 100)	
105	See Note	NSS	Ring, Back-up (Note: Use Item 100)	
106	See Note	NSS	Seal (Note: Use Item 100)	
108	See Note	NSS	Seal (Note: Use Item 100)	
109	See Note	NSS	O-Ring (Note: Use Item 100)	
110	See Note	NSS	Ring, Back-up (Note: Use Item 100)	
111	See Note	NSS	O-Ring (Note: Use Item 100)	
112	See Note	NSS	Ring, Lock (Note: Use Item 100)	

FIGURE 6-6. LIFT CYLINDER ASSEMBLY - MAIN BOOM (SN 0300243704 through 0300272360, SN E300005608 through E300007988)

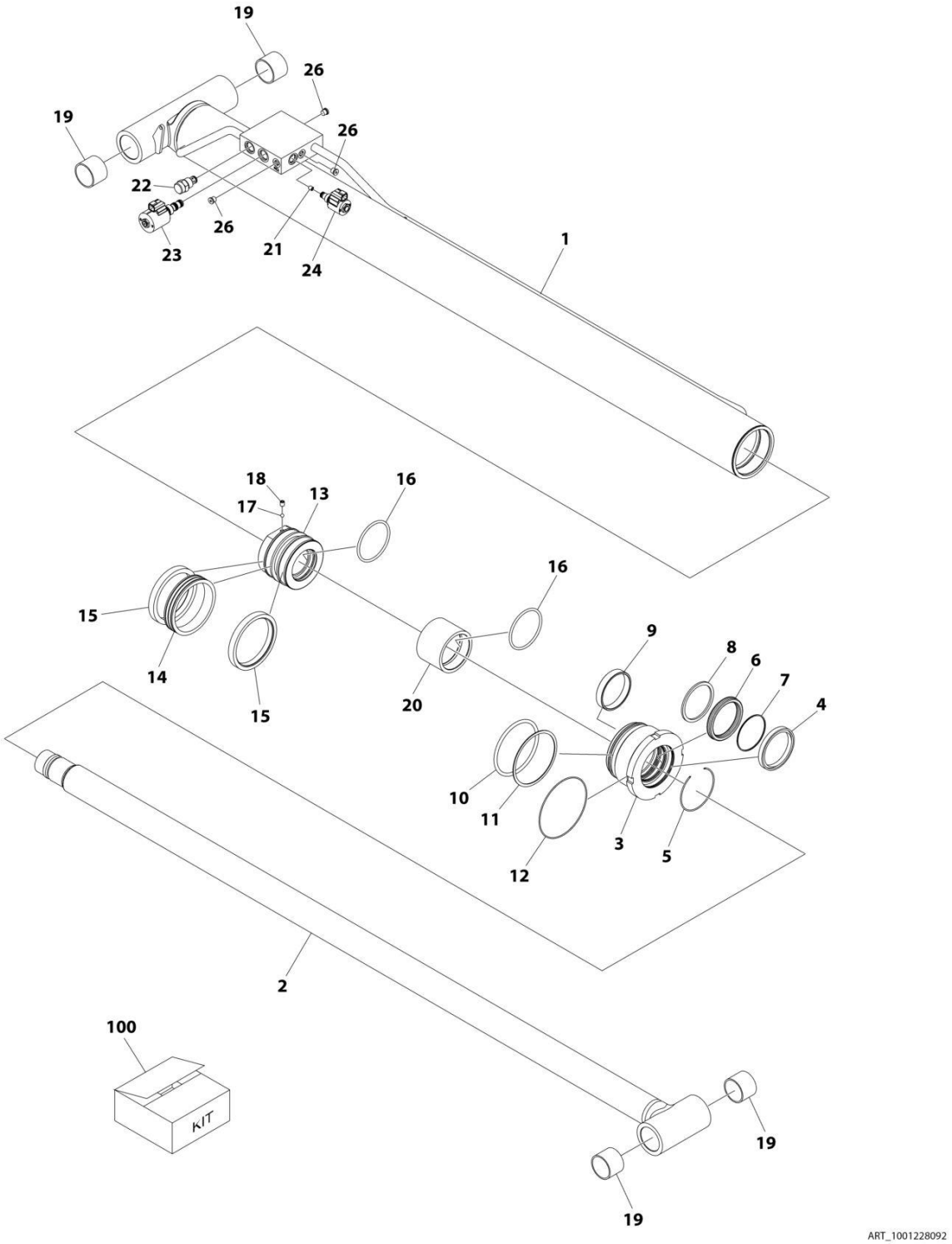

FIGURE 6-6. LIFT CYLINDER ASSEMBLY - MAIN BOOM (SN 0300243704 through 0300272360, SN E300005608 through E300007988)

ITEM	PART NUMBER	QTY	DESCRIPTION	REV
	1001228092	Ref	LIFT CYLINDER ASSEMBLY - MAIN BOOM	A
		Ref	Note: Original Cylinder May Have Been Replaced with Service Replacement. Identify PN Stamped on Cylinder Before Ordering Parts.	
1	See Note	NSS	Barrel (Use p/n 1001228092)	
2	70006702	1	Rod	
3	70006703	1	Head	
4	See Note	NSS	Wiper (Note: Use Item 100)	
5	70050795	1	Ring, Retainer	
6	See Note	NSS	Seal, Rod (Note: Use Item 100)	
7	See Note	NSS	O-Ring (Note: Use Item 100)	
8	See Note	NSS	Ring (Note: Use Item 100)	
9	70006636	1	Ring, Wear	
10	See Note	NSS	O-Ring (Note: Use Item 100)	
11	See Note	NSS	Ring, Back-up (Note: Use Item 100)	
12	See Note	NSS	O-Ring (Note: Use Item 100)	
13	70006704	1	Piston	
14	See Note	NSS	Seal (Note: Use Item 100)	
15	See Note	NSS	Ring, Wear (Note: Use Item 100)	
16	See Note	NSS	Seal (Note: Use Item 100)	
17	70022564	1	Ball	
18	70023369	1	Setscrew M8 x 10	
19	0961950	4	Bearing	
20	70006705	1	Spacer	
21	70004231	1	Orifice	
22	4641390	1	Cartridge, Check Valve	
22	7017496	1	Seal Kit - 4641390 Valve	
23	1001206625	1	Cartridge, Valve (Includes Coil)	
23	70006104	1	Cartridge, Less Coil	
23	70006105	1	Seal Kit - 70006104 & 1001206625 Cartridges	
23	70003788	1	Coil	
23	7022390	1	Nut, Coil	
24	1001164709	1	Cartridge, Valve (Includes Coil)	
24	7017467	1	Cartridge, Less Coil	
24	7012998	1	Seal Kit - 7017467 & 1001164709 Cartridges	
24	70002386	1	Coil	
26	2220883	3	Plug #4	
100	70006706	1	Seal Kit - 1001228092 Cylinder (Includes Item 4, 6-8, 10-12 & 14-16)	

FIGURE 6-7. LIFT CYLINDER ASSEMBLY - JIB (460SJ ONLY) (SN 0300203771 through 0300244835, SN E300000100 through E300005748, SN 1300007289 through 1300007393)

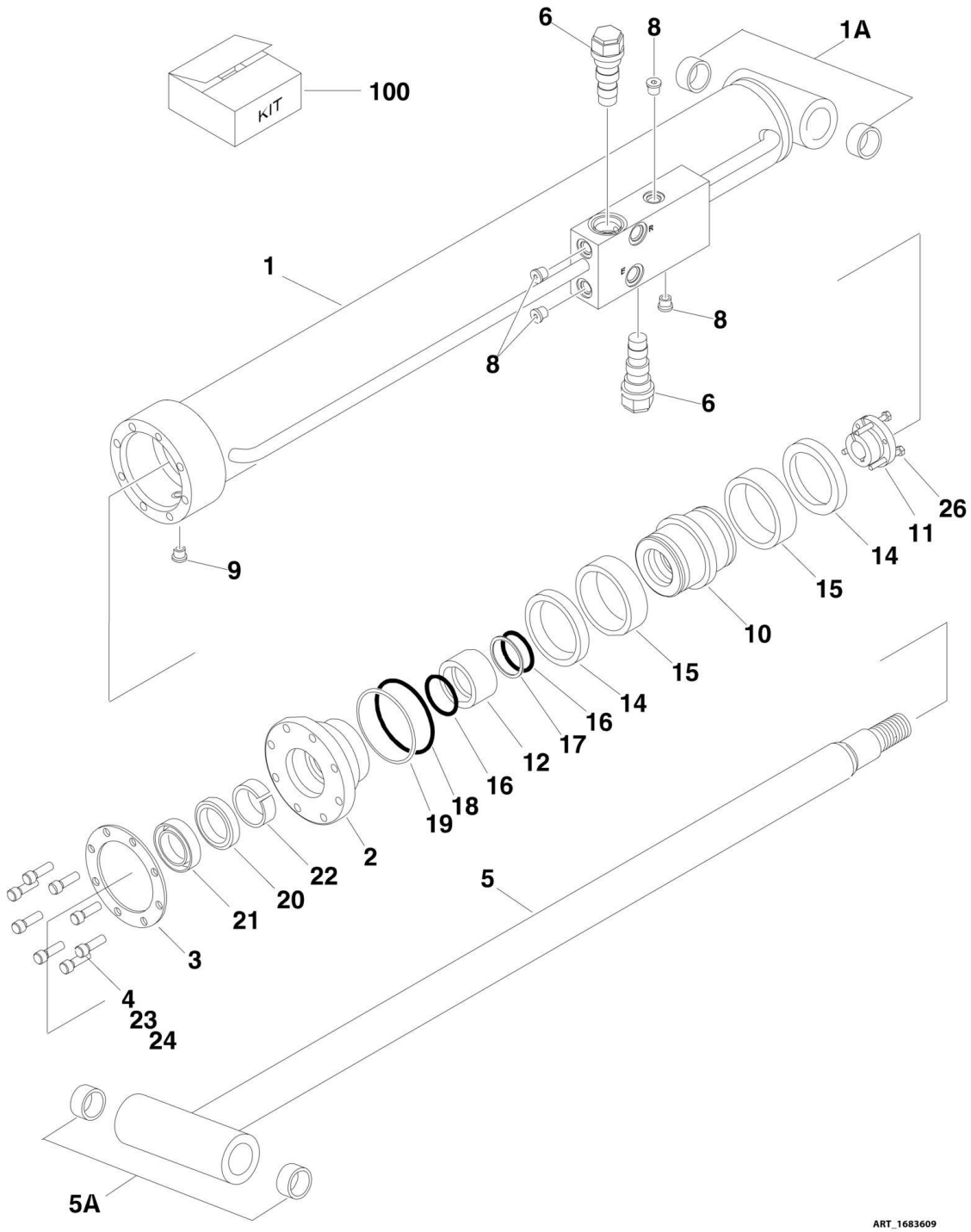

FIGURE 6-7. LIFT CYLINDER ASSEMBLY - JIB (460SJ ONLY) (SN 0300203771 through 0300244835, SN E300000100 through E300005748, SN 1300007289 through 1300007393)

ITEM	PART NUMBER	QTY	DESCRIPTION	REV
	1683609	Ref	LIFT CYLINDER ASSEMBLY - JIB	L
		Ref	Note: Original Cylinder May Have Been Replaced with Service Replacement. Identify PN Stamped on Cylinder Before Ordering Parts.	
1	1683687	1	Barrel	
1A	0962336	2	Bushing	
2	1683053	1	Head	
3	3760368	1	Washer, Ring	
4	3931516	8	Capscrew 5/16 x 2	
5	1683261	1	Rod	
5A	0962336	2	Bushing	
6	4640509	2	Cartridge, Valve (Counterbalance Non-Vented)	
6	2900792	2	Seal Kit - 4640509 Valve	
8	2220883	4	Plug, O-Ring #4	
9	2220885	1	Plug, O-Ring	
10	3480210	1	Piston	
11	0961893	1	Bushing, Tapered	
12	4100100	1	Spacer	
14	See Note	NSS	Ring, Lock (Includes Item 100)	
15	See Note	NSS	Seal (Includes Item 100)	
16	See Note	NSS	O-Ring (Includes Item 100)	
17	See Note	NSS	Ring, Back-up (Includes Item 100)	
18	See Note	NSS	O-Ring (Includes Item 100)	
19	See Note	NSS	Ring, Back-up (Includes Item 100)	
20	See Note	NSS	Seal (Includes Item 100)	
21	See Note	NSS	Wiper (Includes Item 100)	
22	See Note	NSS	Ring, Wear (Includes Item 100)	
23	0100011	AR	Locking, Compound	
24	0100038	AR	Primer, Locking	
26	0630534	3	Capscrew #10 x 1	
100	2901303	1	Seal Kit -1683609 Cylinder (Includes Items 14-22)	

FIGURE 6-8. LIFT CYLINDER ASSEMBLY - JIB (460SJ ONLY) (SN 0300244835 through 0300244838, SN E300005748 through E300007988)

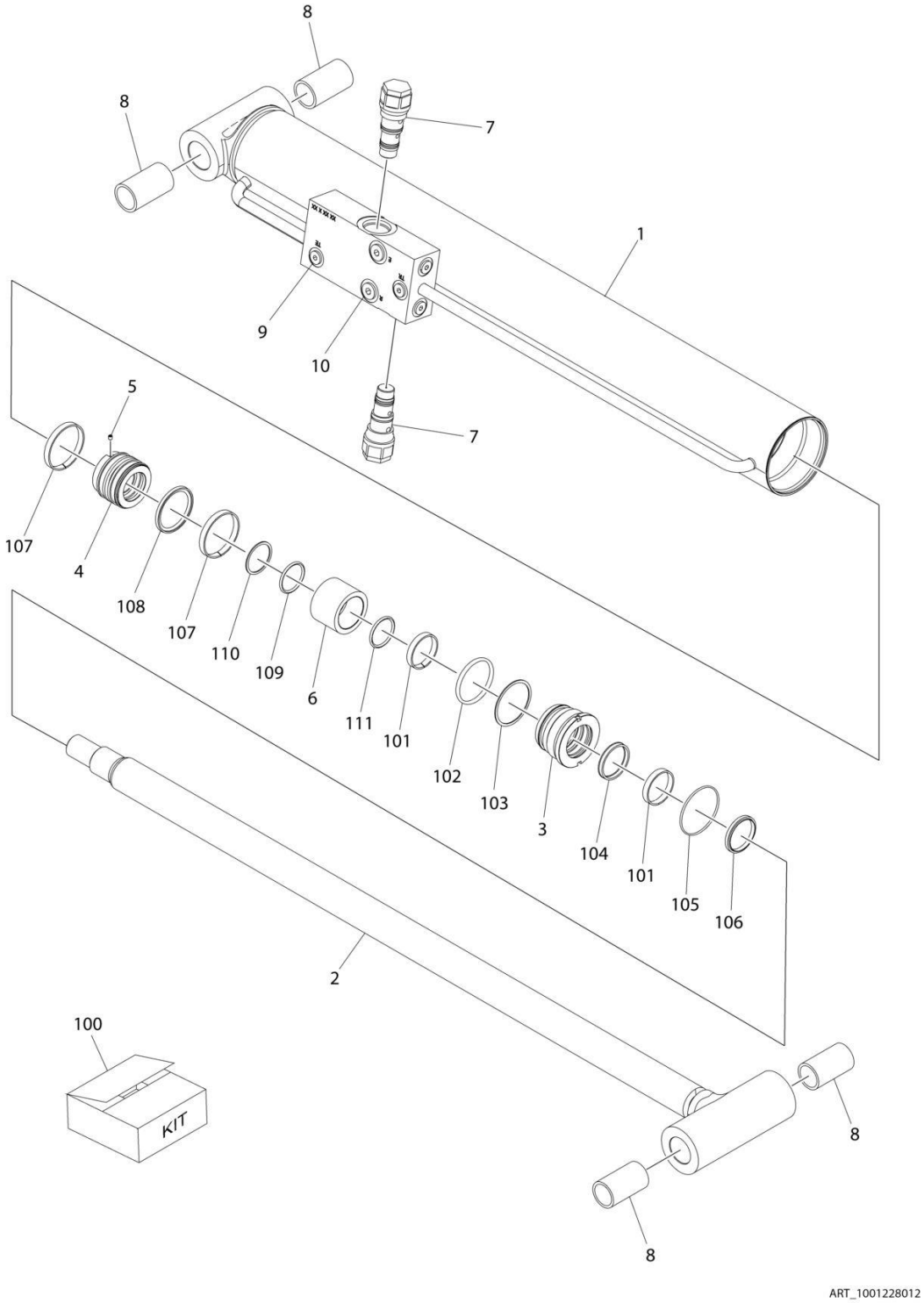

FIGURE 6-8. LIFT CYLINDER ASSEMBLY - JIB (460SJ ONLY) (SN 0300244835 through 0300244838, SN E300005748 through E300007988)

ITEM	PART NUMBER	QTY	DESCRIPTION	REV
	1001228012	Ref	LIFT CYLINDER ASSEMBLY - JIB	C
		Ref	Note: Original Cylinder May Have Been Replaced with Service Replacement. Identify PN Stamped on Cylinder Before Ordering Parts.	
1	See Note	NSS	Barrel (Note: Not Available for Purchase)	
2	70006572	1	Rod	
3	70006571	1	Head	
4	70006570	1	Piston	
5	70023915	1	Screw	
6	70006569	1	Spacer	
7	4640509	2	Cartridge, Valve	
7	2900792	2	Seal Kit - 4640509 Valve	
8	0962336	4	Bushing	
9	2220883	6	Plug, O-Ring	
10	2220885	2	Plug, O-Ring	
100	70006568	1	Seal Kit (Includes Items 101-111)	
101	See Note	NSS	Ring, Wear (Note: Use Item 100)	
102	See Note	NSS	O-Ring (Note: Use Item 100)	
103	See Note	NSS	Ring, Back-up (Note: Use Item 100)	
104	See Note	NSS	Seal, Rod (Note: Use Item 100)	
105	See Note	NSS	O-Ring (Note: Use Item 100)	
106	See Note	NSS	Wiper (Note: Use Item 100)	
107	See Note	NSS	Ring, Wear (Note: Use Item 100)	
108	See Note	NSS	Seal (Note: Use Item 100)	
109	See Note	NSS	O-Ring (Note: Use Item 100)	
110	See Note	NSS	Ring, Back-up (Note: Use Item 100)	
111	See Note	NSS	O-Ring (Note: Use Item 100)	

SECTION 6 - CYLINDER

FIGURE 6-9. LIFT CYLINDER ASSEMBLY - JIB (460SJ ONLY) (SN 0300244839 through 0300272360, SN E300006010 through E300007988)

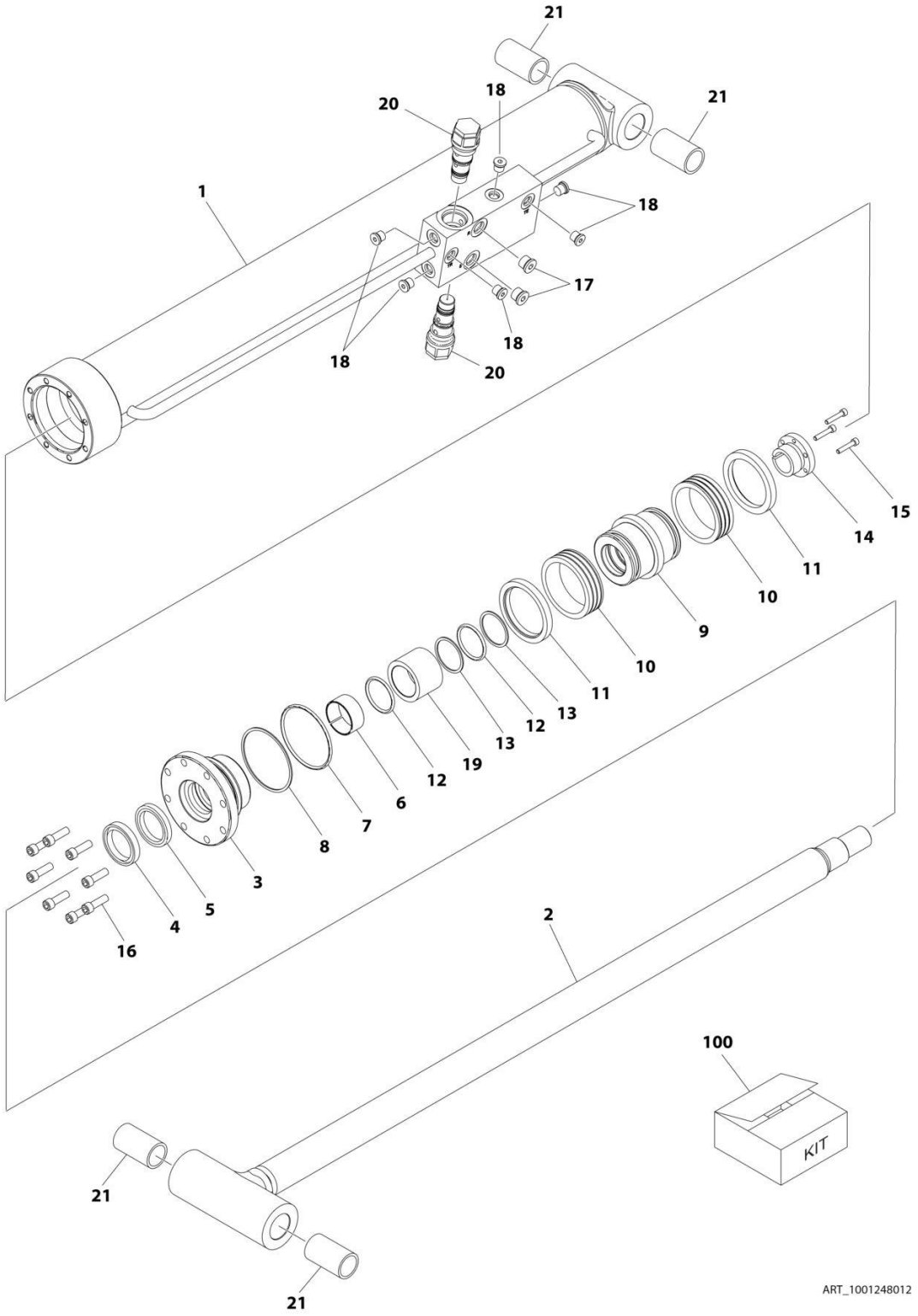

FIGURE 6-9. LIFT CYLINDER ASSEMBLY - JIB (460SJ ONLY) (SN 0300244839 through 0300272360, SN E300006010 through E300007988)

ITEM	PART NUMBER	QTY	DESCRIPTION	REV
	1001248012	Ref	LIFT CYLINDER ASSEMBLY - JIB	C
		Ref	Note: Original Cylinder May Have Been Replaced with Service Replacement. Identify PN Stamped on Cylinder Before Ordering Parts.	
1	See Note	NSS	Barrel (Note: Not Available for Purchase)	
2	70006734	1	Rod	
3	70006649	1	Head	
4	See Note	NSS	Wiper (Note: Use Item 100)	
5	See Note	NSS	Seal, Rod (Note: Use Item 100)	
6	See Note	NSS	Ring, Wear (Note: Use Item 100)	
7	See Note	NSS	O-Ring (Note: Use Item 100)	
8	See Note	NSS	Ring, Back-up (Note: Use Item 100)	
9	70006650	1	Piston	
10	See Note	NSS	Seal (Note: Use Item 100)	
11	See Note	NSS	Ring, Lock (Note: Use Item 100)	
12	See Note	NSS	O-Ring (Note: Use Item 100)	
13	See Note	NSS	Ring, Back-up (Note: Use Item 100)	
14	0961893	1	Bushing, Tapered	
15	0630534	3	Capscrew, Socket Head #10 x 1	
16	70006735	8	Capscrew 5/16	
17	2220885	2	Plug, O-Ring	
18	2220883	6	Plug, O-Ring	
19	70006736	1	Spacer	
20	4640509	2	Cartridge, Valve	
20	2900792	2	Seal Kit - 4640509 Valve	
21	0962336	4	Bushing	
100	1001138795	1	Seal Kit (Includes Items 4-8 & 10-13)	

FIGURE 6-10. MASTER CYLINDER ASSEMBLY

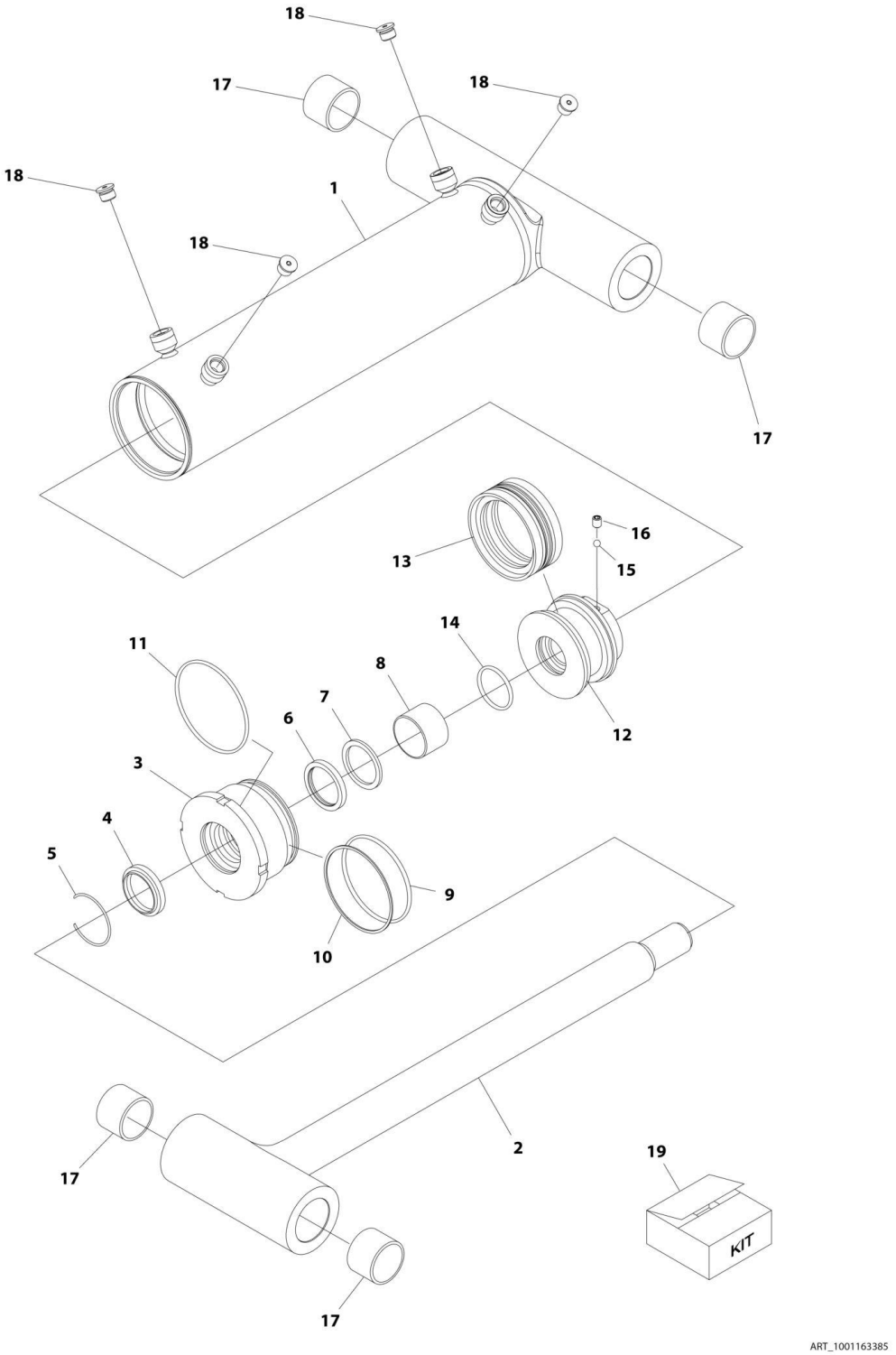

FIGURE 6-10. MASTER CYLINDER ASSEMBLY

ITEM	PART NUMBER	QTY	DESCRIPTION	REV
	1001163385	Ref	MASTER CYLINDER ASSEMBLY	F
		Ref	Note: Original Cylinder May Have Been Replaced with Service Replacement. Identify PN Stamped on Cylinder Before Ordering Parts.	
1	70005140	1	Barrel	
2	70005141	1	Rod	
3	70005142	1	Head, Cylinder	
4	See Note	NSS	Wiper (Note: Use Item 19)	
5	70002373	1	Ring, Retaining	
6	See Note	NSS	Seal, Rod (Note: Use Item 19)	
7	See Note	NSS	Ring, Back-up (Note: Use Item 19)	
8	70005143	1	Bearing, Dry	
9	See Note	NSS	O-Ring (Note: Use Item 19)	
10	See Note	NSS	Ring, Back-up (Note: Use Item 19)	
11	See Note	NSS	O-Ring (Note: Use Item 19)	
12	70005144	1	Piston	
13	See Note	NSS	Seal, Piston	
14	See Note	NSS	O-Ring (Note: Use Item 19)	
15	70022564	1	Ball	
16	70023369	1	Setscrew M8 x 31.75	
17	70005145	4	Bearing	
18	700023371	4	Plug 9/16	
19	70005146	1	Seal Kit - 1001163385 Cylinder (Includes Items 4, 6, 7, 9, 10, 11, 13 & 14)	

FIGURE 6-11. STEER CYLINDER ASSEMBLY

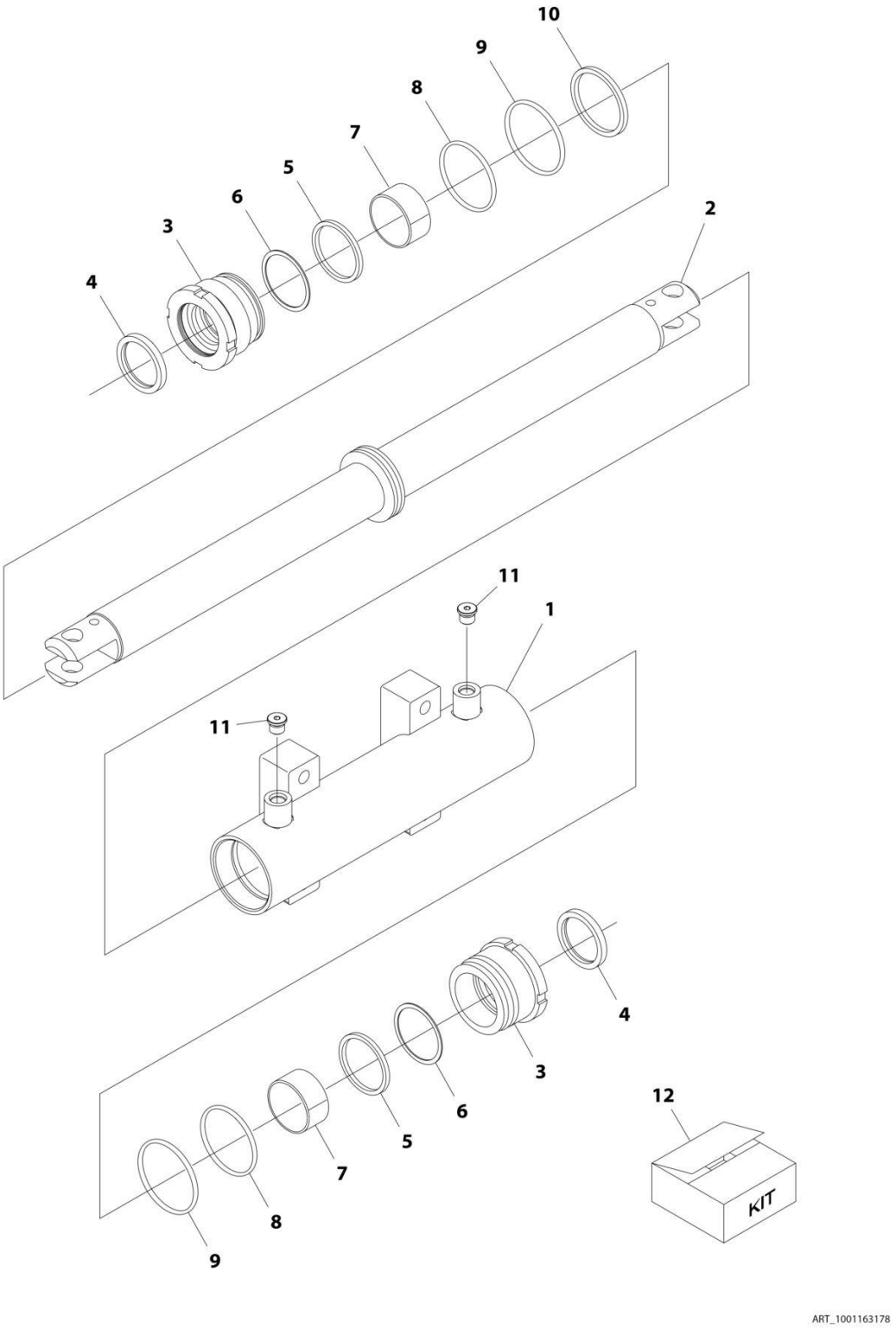

FIGURE 6-11. STEER CYLINDER ASSEMBLY

ITEM	PART NUMBER	QTY	DESCRIPTION	REV
	1001163178	Ref	STEER CYLINDER ASSEMBLY	D
		Ref	Note: Original Cylinder May Have Been Replaced with Service Replacement. Identify PN Stamped on Cylinder Before Ordering Parts.	
1	70005150	1	Barrel	
2	70005151	1	Rod	
3	70005152	2	Head	
4	See Note	NSS	Wiper (Note: Use Item 12)	
5	See Note	NSS	Seal, Rod (Note: Use Item 12)	
6	See Note	NSS	Ring, Back-up (Note: Use Item 12)	
7	70005153	2	Bearing, Dry	
8	See Note	NSS	O-Ring (Note: Use Item 12)	
9	See Note	NSS	O-Ring (Note: Use Item 12)	
10	See Note	NSS	Seal, Piston (Note: Use Item 12)	
11	See Note	2	Plug 9/16 (Note: Not Available for Purchase)	
12	70005154	1	Seal Kit - 1001163178 Cylinder (Includes Items 4-6 & 8-10)	

FIGURE 6-12. TELESCOPE CYLINDER ASSEMBLY (SN 0300203771 through 0300244182, SN E300000100 through E300005673, SN 1300007289 through 1300007393)

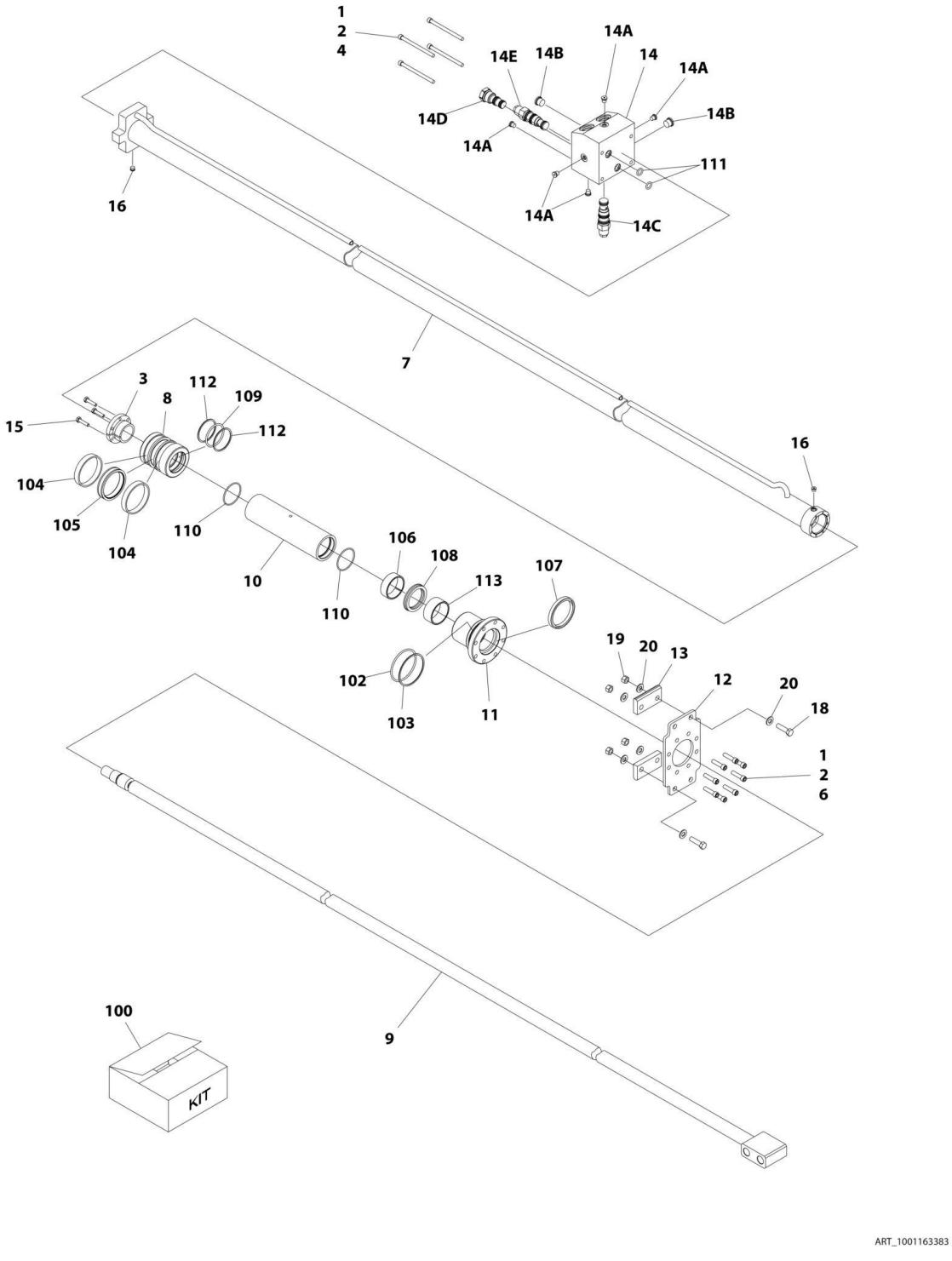

FIGURE 6-12. TELESCOPE CYLINDER ASSEMBLY (SN 0300203771 through 0300244182, SN E300000100 through E300005673, SN 1300007289 through 1300007393)

ITEM	PART NUMBER	QTY	DESCRIPTION	REV
	1001163383	Ref	TELESCOPE CYLINDER ASSEMBLY	K
		Ref	Note: Original Cylinder May Have Been Replaced with Service Replacement. Identify PN Stamped on Cylinder Before Ordering Parts.	
1	0100011	AR	Compound, Locking	
2	0100038	AR	Primer, Locking	
3	0961896	1	Bushing	
4	3931456	4	Capscrew 1/4 x 3-1/2	
6	3931520	8	Capscrew 5/16 x 1-1/4	
7	1001164302	1	Barrel	
8	3480274	1	Piston	
9	1001164311	1	Rod	
10	1001164555	1	Spacer	
11	1001195206	1	Head	
12	1001165282	1	Plate	
13	1001165737	2	Pad, Wear	
14	1001166997	1	Valve Block Assembly	
14A	2220881	5	Plug, O-Ring	
14B	2220885	2	Plug, O-Ring #6	
14C	4640452	1	Cartridge, Counterbalance Valve	
14C	2900770	1	Seal Kit - 4640452 Valve	
14D	1001165363	1	Cartridge, Shuttle Valve	
14D	7012518	1	Seal Kit - 1001165363 Valve	
14E	1001168209	1	Cartridge, Counterbalance Valve	
14E	2900770	1	Seal Kit - 1001168209 Valve	
15	0630535	3	Bolt 1/4 x 1-1/8	
16	2220885	2	Plug, O-Ring #6	
18	0641611	4	Bolt 3/8 x 1-3/8	
19	3271605	4	Nut 3/8 Grade 8	
20	4711600	8	Washer 3/8	
100	1001164313	1	Seal Kit - 1001163383 Cylinder (Includes Items 102-113)	
102	See Note	NSS	O-Ring (Note: Use Item 100)	
103	See Note	NSS	Seal (Note: Use Item 100)	
104	See Note	NSS	Ring, Wear (Note: Use Item 100)	
105	See Note	NSS	Seal (Note: Use Item 100)	
106	See Note	NSS	Ring, Wear (Note: Use Item 100)	
107	See Note	NSS	Wiper (Note: Use Item 100)	
108	See Note	NSS	Seal (Note: Use Item 100)	
109	See Note	NSS	O-Ring (Note: Use Item 100)	
110	See Note	NSS	O-Ring (Note: Use Item 100)	
111	See Note	NSS	O-Ring (Note: Use Item 100)	
112	See Note	NSS	Ring, Back-up (Note: Use Item 100)	
113	See Note	NSS	Ring, Wear (Note: Use Item 100)	

FIGURE 6-13. TELESCOPE CYLINDER ASSEMBLY (SN 0300244183 through 0300255279, SN E300005674 through E300006467)

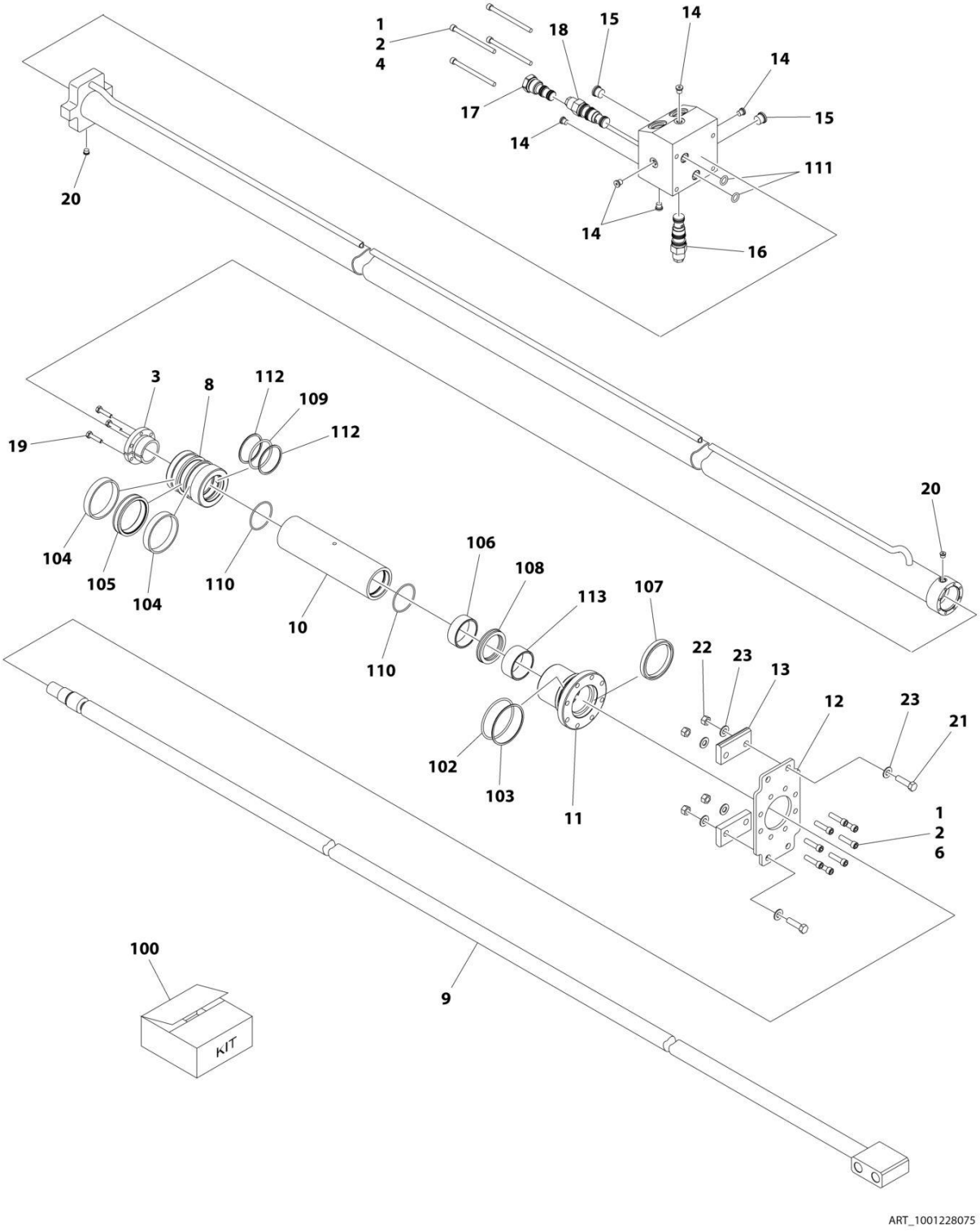

FIGURE 6-13. TELESCOPE CYLINDER ASSEMBLY (SN 0300244183 through 0300255279, SN E300005674 through E300006467)

ITEM	PART NUMBER	QTY	DESCRIPTION	REV
	1001228075	Ref	TELESCOPE CYLINDER ASSEMBLY	B
		Ref	Note: Original Cylinder May Have Been Replaced with Service Replacement. Identify PN Stamped on Cylinder Before Ordering Parts.	
1	0100011	AR	Compound, Locking	
2	0100038	AR	Primer, Locking	
3	70006360	1	Bushing	
4	3931456	4	Capscrew 1/4 x 3-1/2	
6	3931520	8	Capscrew 5/16 x 1-1/4	
8	70006420	1	Piston	
9	70006421	1	Rod	
10	70006418	1	Spacer	
11	70006419	1	Head	
12	70006416	1	Plate	
13	70006417	2	Pad, Wear	
14	2220881	5	Plug, O-Ring	
15	2220885	2	Plug, O-Ring #6	
16	4640452	1	Cartridge, Counterbalance Valve	
16	2900770	1	Seal Kit - 4640452 Valve	
17	1001165363	1	Cartridge, Shuttle Valve	
17	7012518	1	Seal Kit - 1001165363 Valve	
18	1001168209	1	Cartridge, Counterbalance Valve	
18	2900770	1	Seal Kit - 1001168209 Valve	
19	0630535	3	Bolt 1/4 x 1-1/8	
20	2220885	2	Plug, O-Ring #6	
21	0641611	4	Bolt 3/8 x 1-3/8	
22	3271605	4	Nut 3/8 Grade 8	
23	4711600	8	Washer 3/8	
100	1001164313	1	Seal Kit - 1001163383 Cylinder (Includes Items 102-113)	
102	See Note	NSS	O-Ring (Note: Use Item 100)	
103	See Note	NSS	Seal (Note: Use Item 100)	
104	See Note	NSS	Ring, Wear (Note: Use Item 100)	
105	See Note	NSS	Seal (Note: Use Item 100)	
106	See Note	NSS	Ring, Wear (Note: Use Item 100)	
107	See Note	NSS	Wiper (Note: Use Item 100)	
108	See Note	NSS	Seal (Note: Use Item 100)	
109	See Note	NSS	O-Ring (Note: Use Item 100)	
110	See Note	NSS	O-Ring (Note: Use Item 100)	
111	See Note	NSS	O-Ring (Note: Use Item 100)	
112	See Note	NSS	Ring, Back-up (Note: Use Item 100)	
113	See Note	NSS	Ring, Wear (Note: Use Item 100)	

FIGURE 6-14. TELESCOPE CYLINDER ASSEMBLY (SN 0300255280 through 0300272360, SN E300006468 through E300007988)

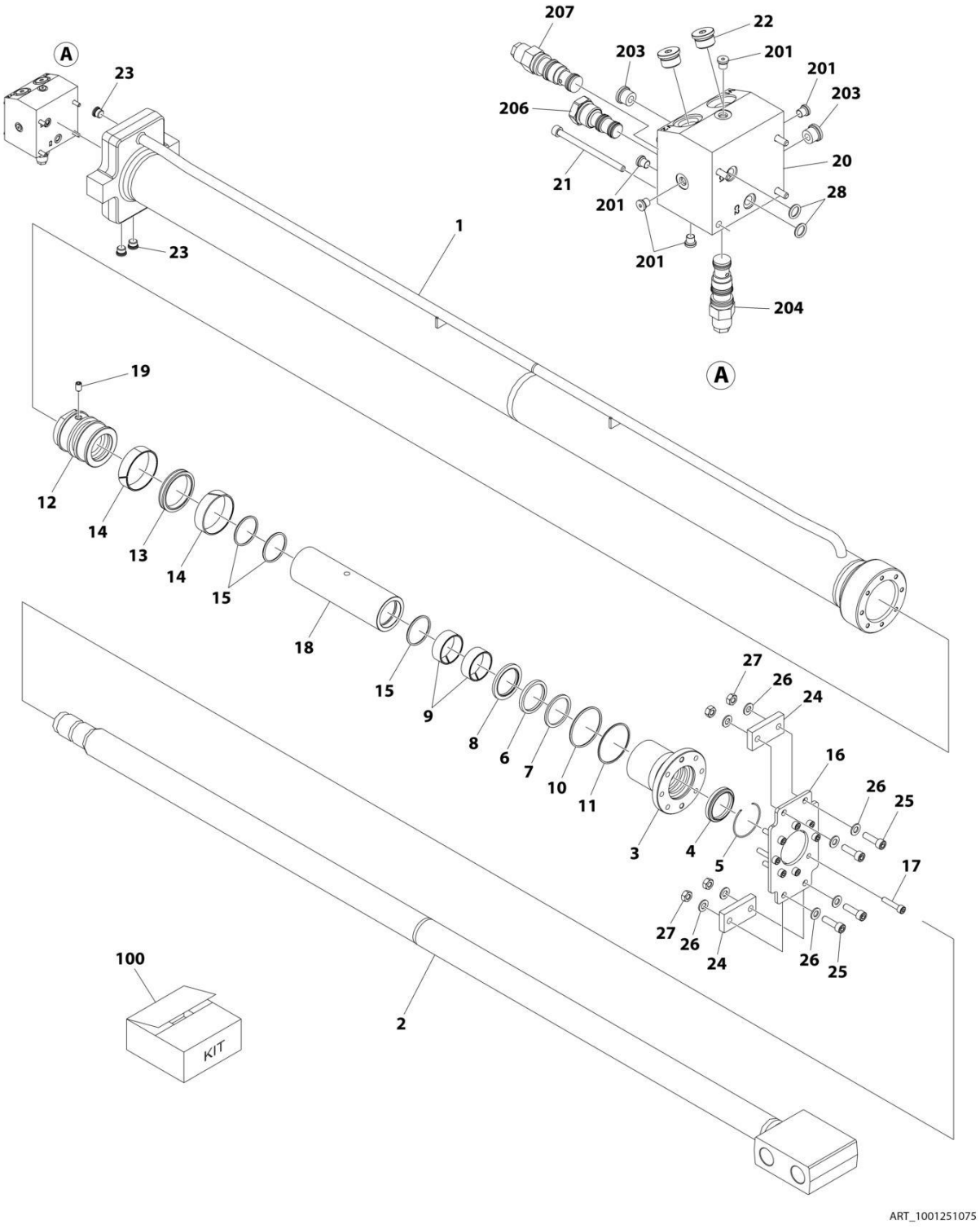

FIGURE 6-14. TELESCOPE CYLINDER ASSEMBLY (SN 0300255280 through 0300272360, SN E300006468 through E300007988)

ITEM	PART NUMBER	QTY	DESCRIPTION	REV
	1001251075	Ref	TELESCOPE CYLINDER ASSEMBLY	B
		Ref	Note: Original Cylinder May Have Been Replaced with Service Replacement. Identify PN Stamped on Cylinder Before Ordering Parts.	
1	See Note	NSS	Barrel (Note: Purchase Complete Assembly)	
2	70007062	1	Rod	
3	70007063	1	Head	
4	See Note	NSS	Wiper (Note: Use Item 100)	
5	70002412	1	Ring, Retaining	
6	See Note	NSS	Seal (Note: Use Item 100)	
7	See Note	NSS	Ring, Back-up (Note: Use Item 100)	
8	See Note	NSS	Ring, Wear (Note: Use Item 100)	
9	See Note	NSS	Ring, Wear (Note: Use Item 100)	
10	See Note	NSS	O-Ring (Note: Use Item 100)	
11	See Note	NSS	Ring, Back-up (Note: Use Item 100)	
12	70007064	1	Piston	
13	See Note	NSS	Seal (Note: Use Item 100)	
14	See Note	NSS	Ring, Wear (Note: Use Item 100)	
15	See Note	NSS	O-Ring (Note: Use Item 100)	
16	70007065	1	Plate	
17	70007066	8	Capscrew	
18	70007067	1	Spacer	
19	70006817	1	Set Screw	
20	1001166997	1	Valve Block Assembly (See Items 201-207 for Breakdown)	
21	70007068	4	Capscrew	
22	2220886	2	Plug, O-Ring	
23	2220885	3	Plug	
24	70007069	2	Pad, Wear	
25	70007070	4	Bolt	
26	70006344	8	Washer	
27	70007071	4	Nut	
28	See Note	NSS	O-Ring (Note: Use Item 100)	
100	70007072	1	Seal Kit - 1001251075 Cylinder (Includes Items 4, 6-11, 13-15 & 28)	
	1001166997	Ref	VALVE BLOCK ASSEMBLY	
201	2220881	5	Plug	
203	2220885	2	Plug	
204	4640452	1	Cartridge, Counterbalance Valve	
204	2900770	1	Seal Kit - 4640452 Valve	
206	1001165363	1	Cartridge, Shuttle Valve	
206	7012518	1	Seal Kit - 1001165363 Valve	
207	1001168209	1	Cartridge, Counterbalance Valve	
207	2900770	1	Seal Kit - 1001168209 Valve	

SECTION 7 - HYDRAULIC

FIGURE 7-1. 400S 2WD HYDRAULIC SYSTEM INSTALLATION (SN 0300203771 through 0300220609)

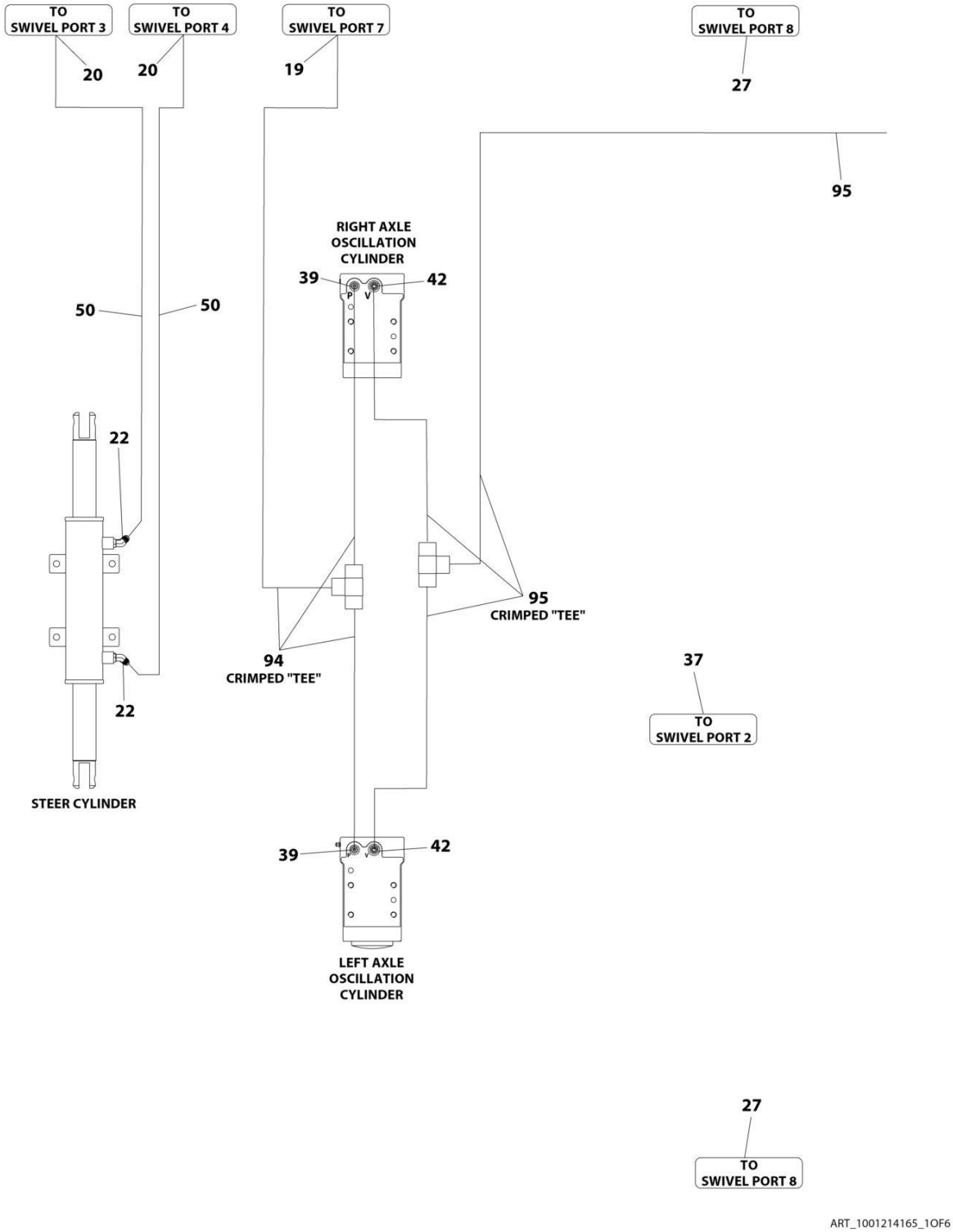

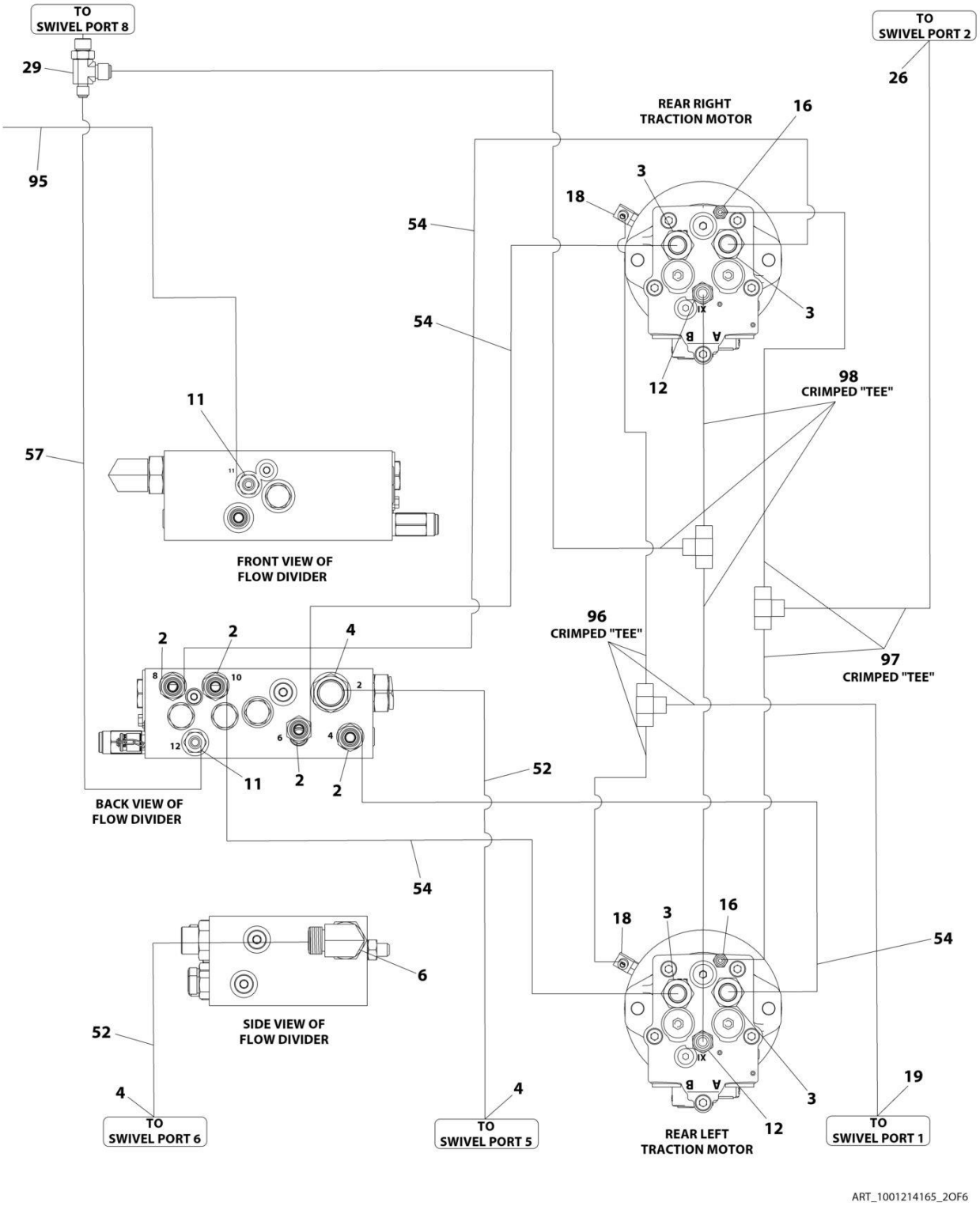
TO SWIVEL PORT 8
29
95
TO SWIVEL PORT 2
26
REAR RIGHT TRACTION MOTOR
16
3
18
54
54
3
12
98 CRIMPED "TEE"
11
57
FRONT VIEW OF FLOW DIVIDER
96 CRIMPED "TEE"
97 CRIMPED "TEE"
2
2
4
52
BACK VIEW OF FLOW DIVIDER
54
SIDE VIEW OF FLOW DIVIDER
6
52
4
TO SWIVEL PORT 6
4
TO SWIVEL PORT 5
REAR LEFT TRACTION MOTOR
12
3
19
TO SWIVEL PORT 1
ART_1001214165_2OF6

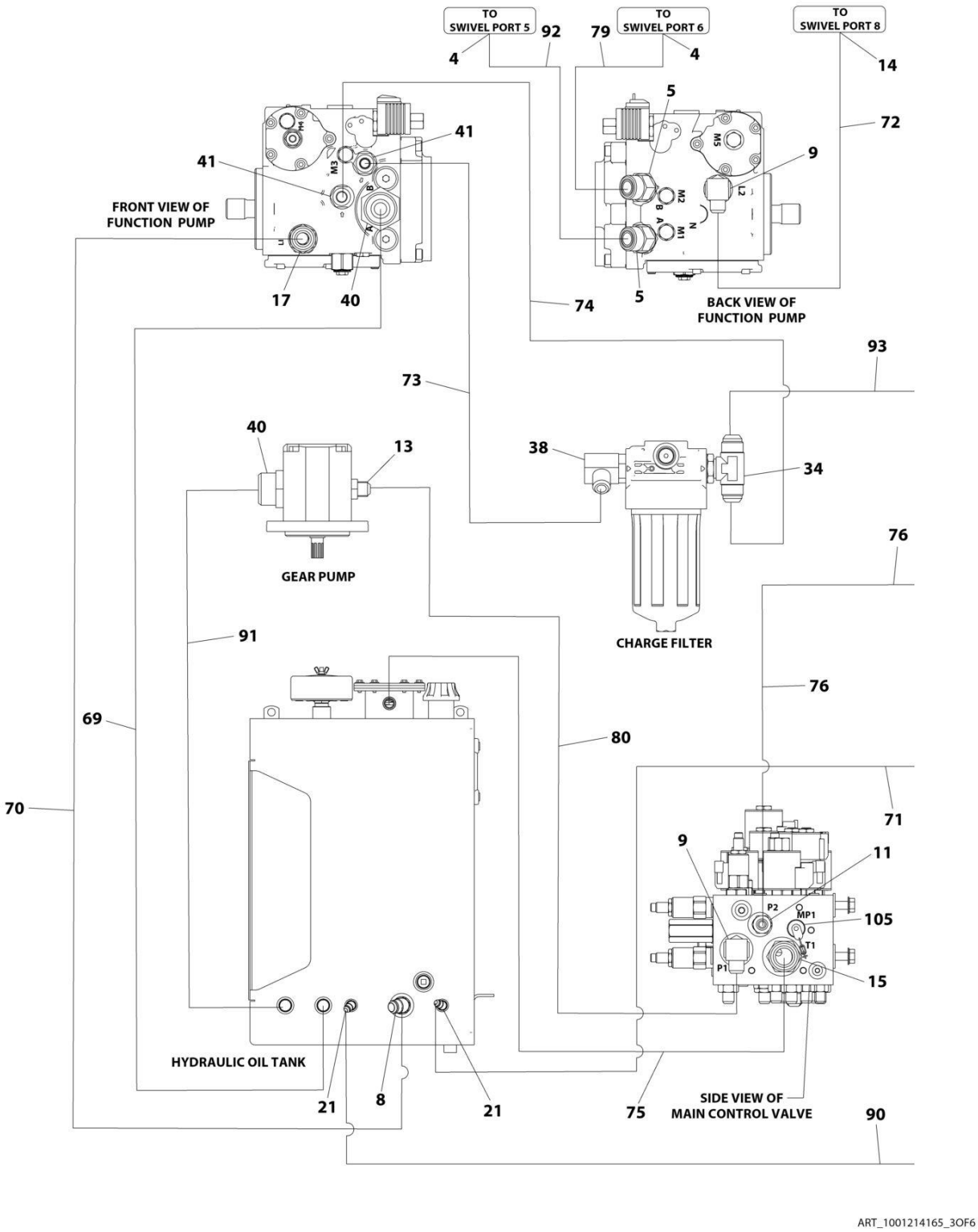
TO SWIVEL PORT 5
TO SWIVEL PORT 6
TO SWIVEL PORT 8
FRONT VIEW OF FUNCTION PUMP
BACK VIEW OF FUNCTION PUMP
GEAR PUMP
CHARGE FILTER
HYDRAULIC OIL TANK
SIDE VIEW OF MAIN CONTROL VALVE
ART_1001214165_3OF6

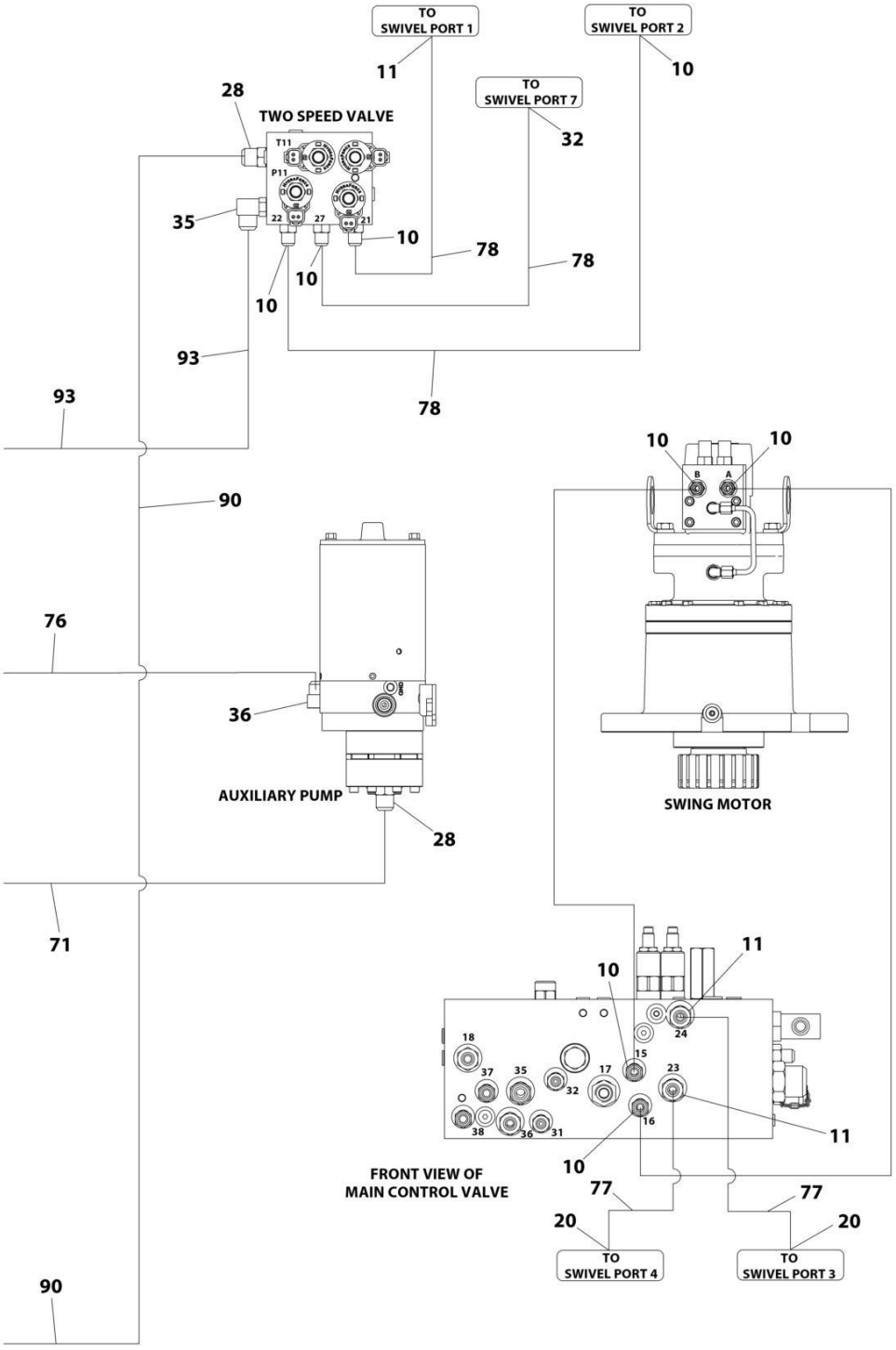

ART_1001214165_4OF6

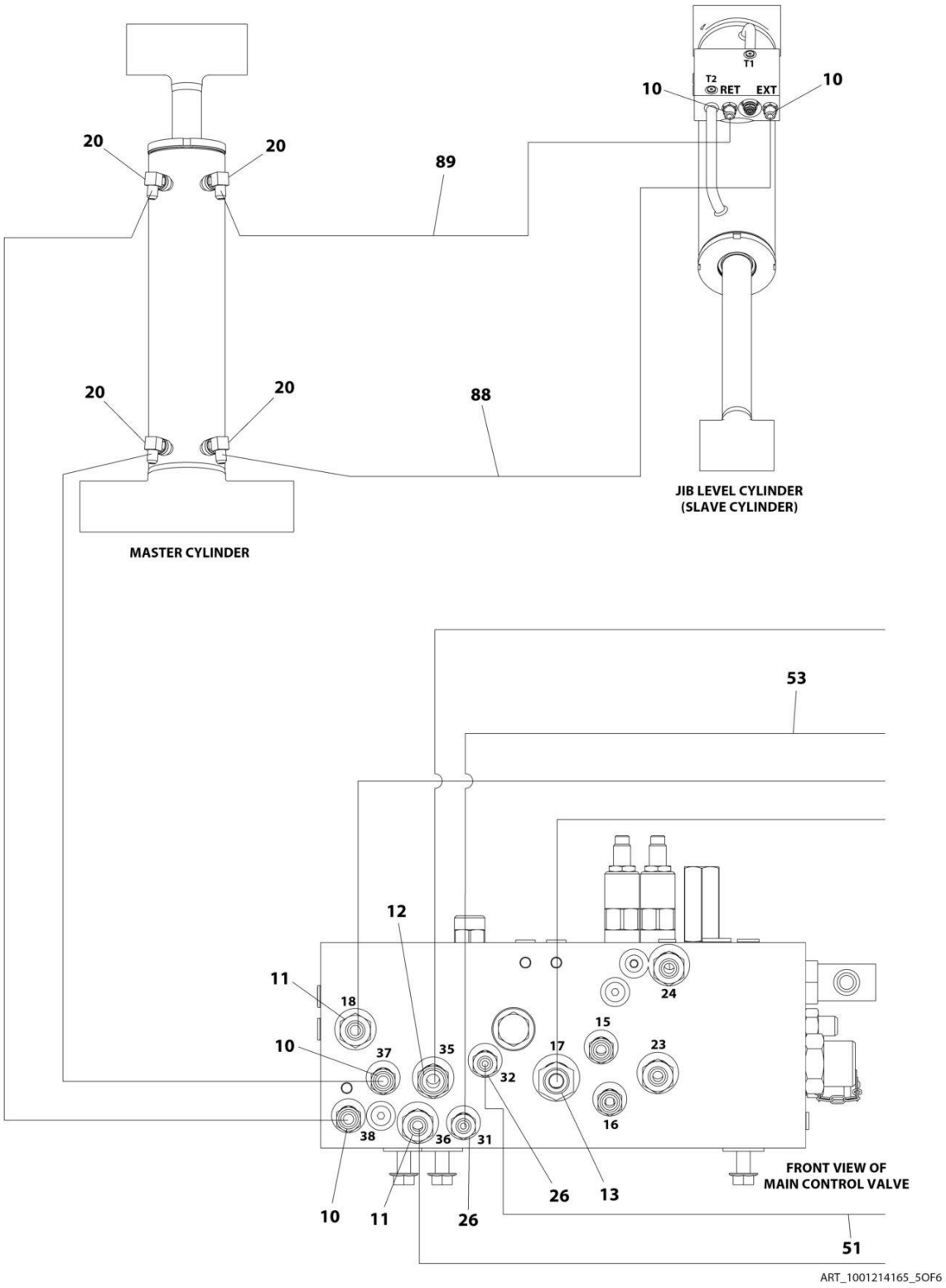
T1
T2
RET
EXT
10
10
20
20
89
20
20
88
JIB LEVEL CYLINDER
(SLAVE CYLINDER)
MASTER CYLINDER
53
12
11
18
10
37
35
32
17
15
23
24
16
38
36
31
10
11
26
26
13
FRONT VIEW OF
MAIN CONTROL VALVE
51
ART_1001214165_5OF6

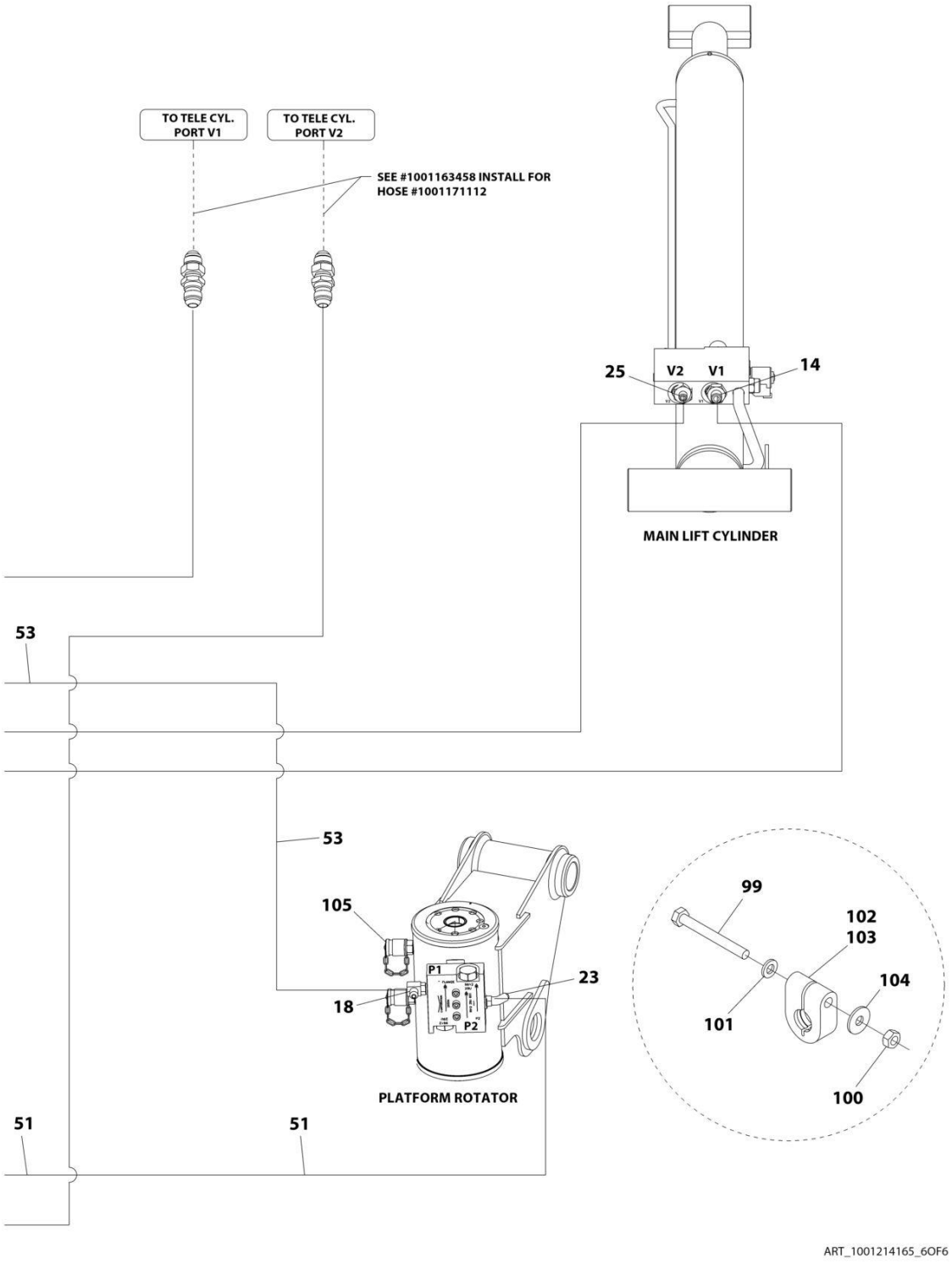
TO TELE CYL. PORT V1
TO TELE CYL. PORT V2
SEE #1001163458 INSTALL FOR HOSE #1001171112
25
V2
V1
14
MAIN LIFT CYLINDER
53
53
105
P1
23
18
P2
PLATFORM ROTATOR
99
102
103
104
101
100
51
51
ART_1001214165_6OF6

FIGURE 7-1. 400S 2WD HYDRAULIC SYSTEM INSTALLATION (SN 0300203771 through 0300220609)

ITEM	PART NUMBER	QTY	DESCRIPTION	REV
	1001214165	Ref	400S 2WD HYDRAULIC SYSTEM INSTALLATION	B
2	2110810	4	Fitting, Straight ORFS/ORB	
3	2110812	4	Fitting, Straight ORFS/ORB	
4	2111216	5	Fitting, Straight ORFS/ORB	
5	2151212	2	Fitting, 45 JIC/ORB	
6	2131216	1	Fitting, 90 ORFS/ORB	
8	2220365	1	Fitting, 45 JIC/ORB	
9	2220366	2	Fitting, 90 JIC/ORB	
10	2220371	12	Fitting, Straight JIC/ORB	
11	2220372	8	Fitting, Straight JIC/ORB	
12	2220373	3	Fitting, Straight JIC/ORB	
13	2220374	2	Fitting, Straight JIC/ORB	
14	2220375	2	Fitting, Straight JIC/ORB	
15	2220377	1	Fitting, Straight JIC/ORB	
16	2220415	2	Fitting, Straight JIC/ORB	
17	2220451	1	Fitting, Straight JIC/ORB	
18	2220466	3	Fitting, 90 JIC/ORB	
19	2220468	2	Fitting, Straight JIC/ORB	
20	2220473	8	Fitting, 90 JIC/ORB	
21	2220500	2	Fitting, 45 JIC/ORB	
22	2220501	2	Fitting, 45 JIC/ORB	
23	2220502	1	Fitting, 45 JIC/ORB	
25	2220577	1	Fitting, Straight JIC/ORB	
26	2220582	3	Fitting, Straight JIC/ORB	
27	2220238	2	Fitting, Plug ORB	
28	2220600	2	Fitting, Straight JIC/ORB	
29	1001197272	1	Fitting, Tee JIC/ORB/JIC	
32	2220628	1	Fitting, 90 JIC/ORB	
34	2220695	1	Fitting, Tee JIC/ORB/JIC	
35	2220726	1	Fitting, 90 JIC/ORB	
36	2220775	1	Fitting, 90 JIC/ORB	
37	2220237	1	Fitting, Plug ORB	
38	2220906	1	Fitting, 90 JIC/ORB	
39	2220923	2	Fitting, Straight JIC/ORB	
40	2220946	2	Fitting, Straight JIC/ORB	
41	2220947	2	Fitting, Straight JIC/ORB	
42	2220998	2	Fitting, Straight JIC/ORB	
44	4240018	13	Tie-Strap (Not Shown)	
47	80633030	2	Clamp (Not Shown)	
49	1001098928	1	Clamp (Not Shown)	
50	1001172692	2	Hose	
51	1001172694	1	Hose	
52	1001172695	2	Hose	
53	1001172696	1	Hose	
54	1001172697	4	Hose	
57	1001197284	1	Hose	
69	1001172713	1	Hose	
70	1001172715	1	Hose	
71	1001172716	1	Hose	
72	1001172717	1	Hose	

ITEM	PART NUMBER	QTY	DESCRIPTION	REV
73	1001172718	1	Hose	
74	1001172719	1	Hose	
75	1001172720	1	Hose	
76	1001172721	1	Hose	
77	1001172722	2	Hose	
78	1001172723	3	Hose	
79	1001173898	1	Hose	
80	1001173899	1	Hose	
88	1001173909	1	Hose	
89	1001173937	1	Hose	
90	1001173938	1	Hose	
91	1001181073	1	Hose	
92	1001181074	1	Hose	
93	1001181075	1	Hose	
94	1001184542	1	Hose	
95	1001184543	1	Hose	
96	1001184561	1	Hose	
97	1001184562	1	Hose	
98	1001184563	1	Hose	
99	0700619	2	Bolt, M6 x 55	
100	3290601	2	Nut, M6 x 1	
101	4811700	2	Washer, M6	
102	1001191275	1	Clamp	
103	1001191276	1	Clamp	
104	4811702	2	Washer, M6	
105	2221086	3	Fitting, Diagnostic Test Port	

FIGURE 7-2. 400S 2WD HYDRAULIC SYSTEM INSTALLATION (SN 0300220610 through 0300272360)

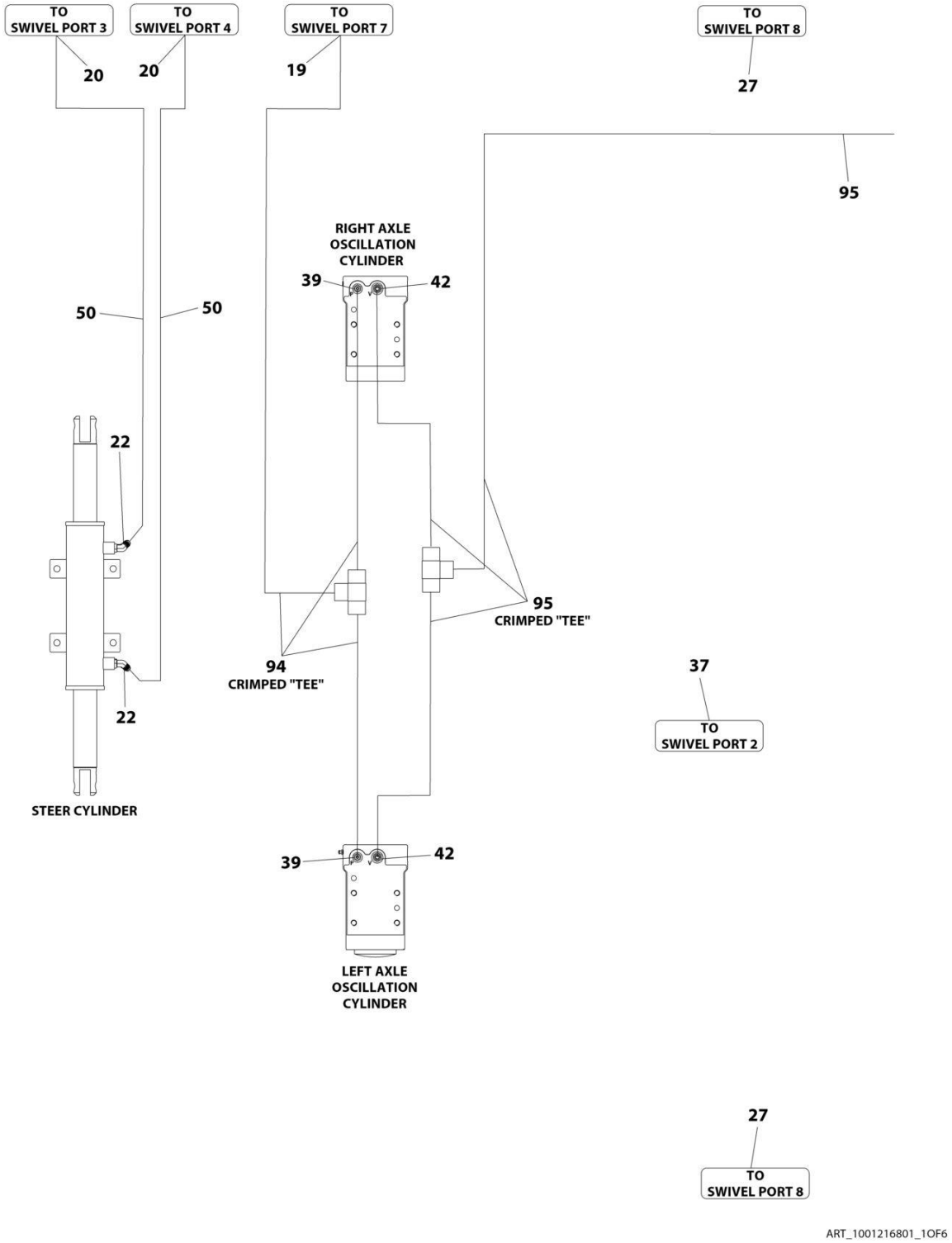

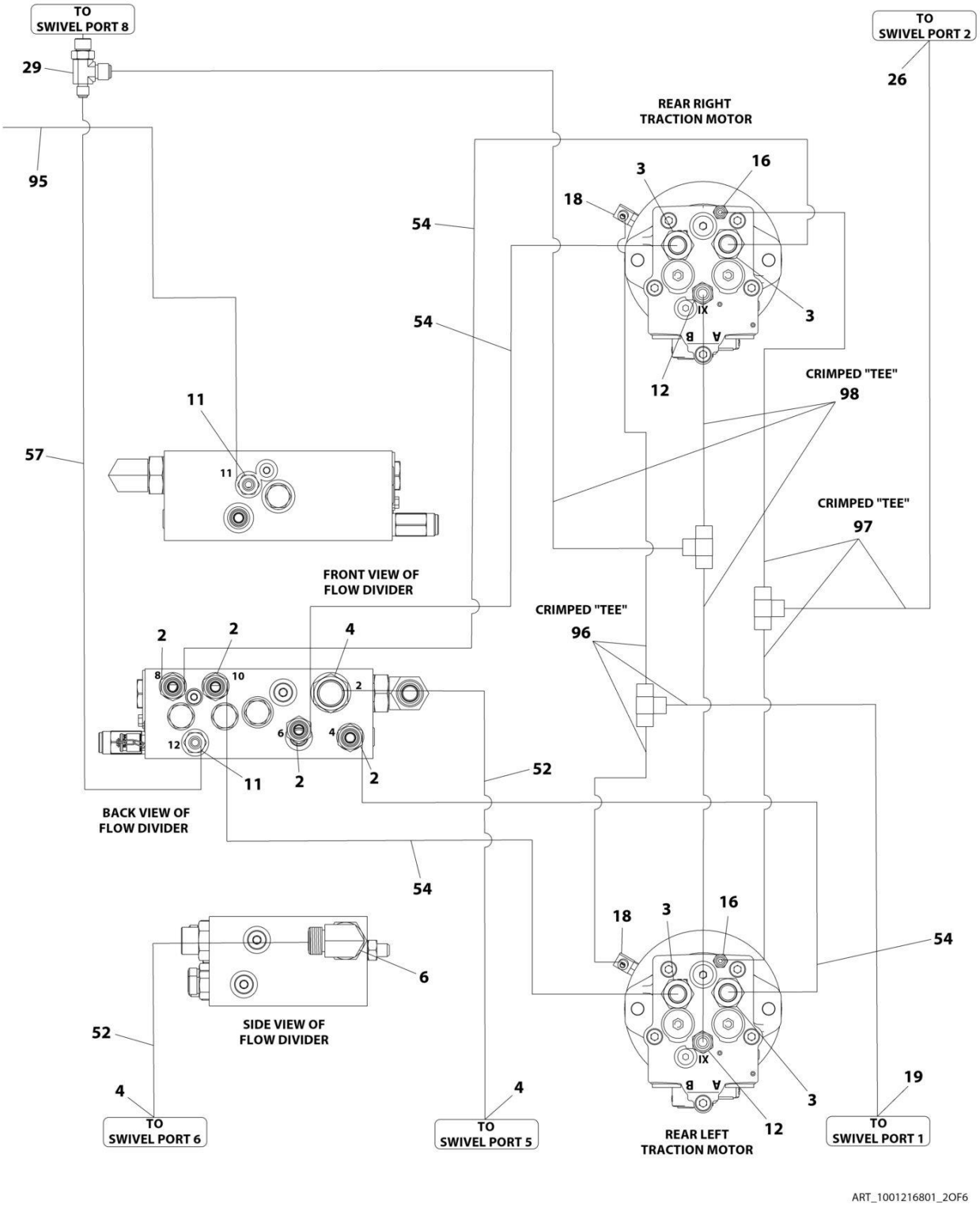
TO SWIVEL PORT 8
29
95
TO SWIVEL PORT 2
26
REAR RIGHT TRACTION MOTOR
3
16
18
54
54
IX
A
B
3
12
CRIMPED "TEE"
98
11
57
11
CRIMPED "TEE"
97
FRONT VIEW OF FLOW DIVIDER
CRIMPED "TEE"
96
2
2
4
8
10
2
6
4
12
11
2
2
52
BACK VIEW OF FLOW DIVIDER
54
18
3
16
54
6
SIDE VIEW OF FLOW DIVIDER
52
IX
A
B
3
19
4
4
12
TO SWIVEL PORT 6
TO SWIVEL PORT 5
REAR LEFT TRACTION MOTOR
TO SWIVEL PORT 1
ART_1001216801_2OF6

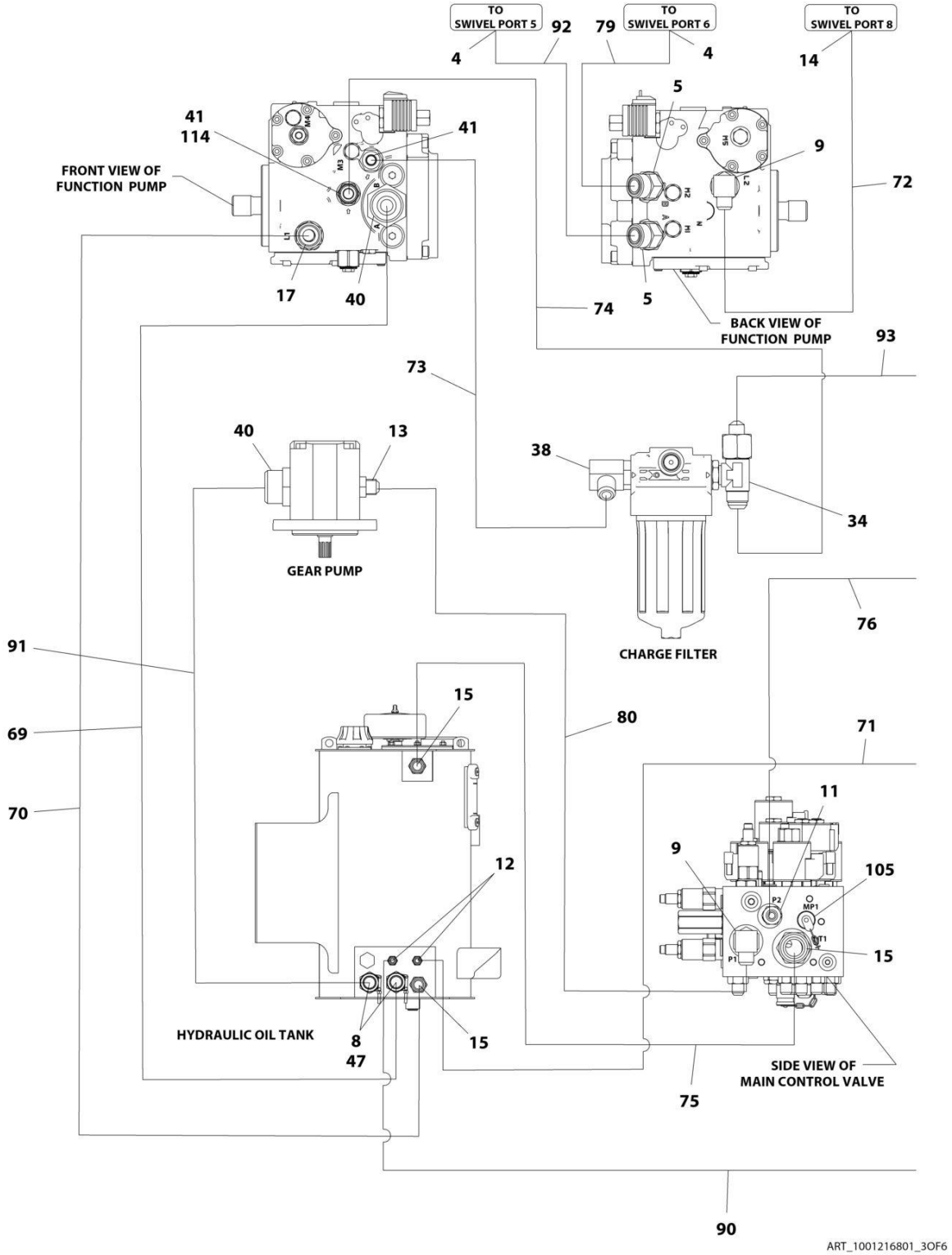
TO SWIVEL PORT 5
TO SWIVEL PORT 6
TO SWIVEL PORT 8
92
79
4
4
14
5
41
114
41
9
FRONT VIEW OF FUNCTION PUMP
72
17
40
74
5
BACK VIEW OF FUNCTION PUMP
93
73
40
13
38
34
GEAR PUMP
CHARGE FILTER
76
91
15
80
71
69
11
70
9
105
12
P2
MP1
MT1
15
P1
HYDRAULIC OIL TANK
8
47
15
SIDE VIEW OF MAIN CONTROL VALVE
75
90
ART_1001216801_3OF6

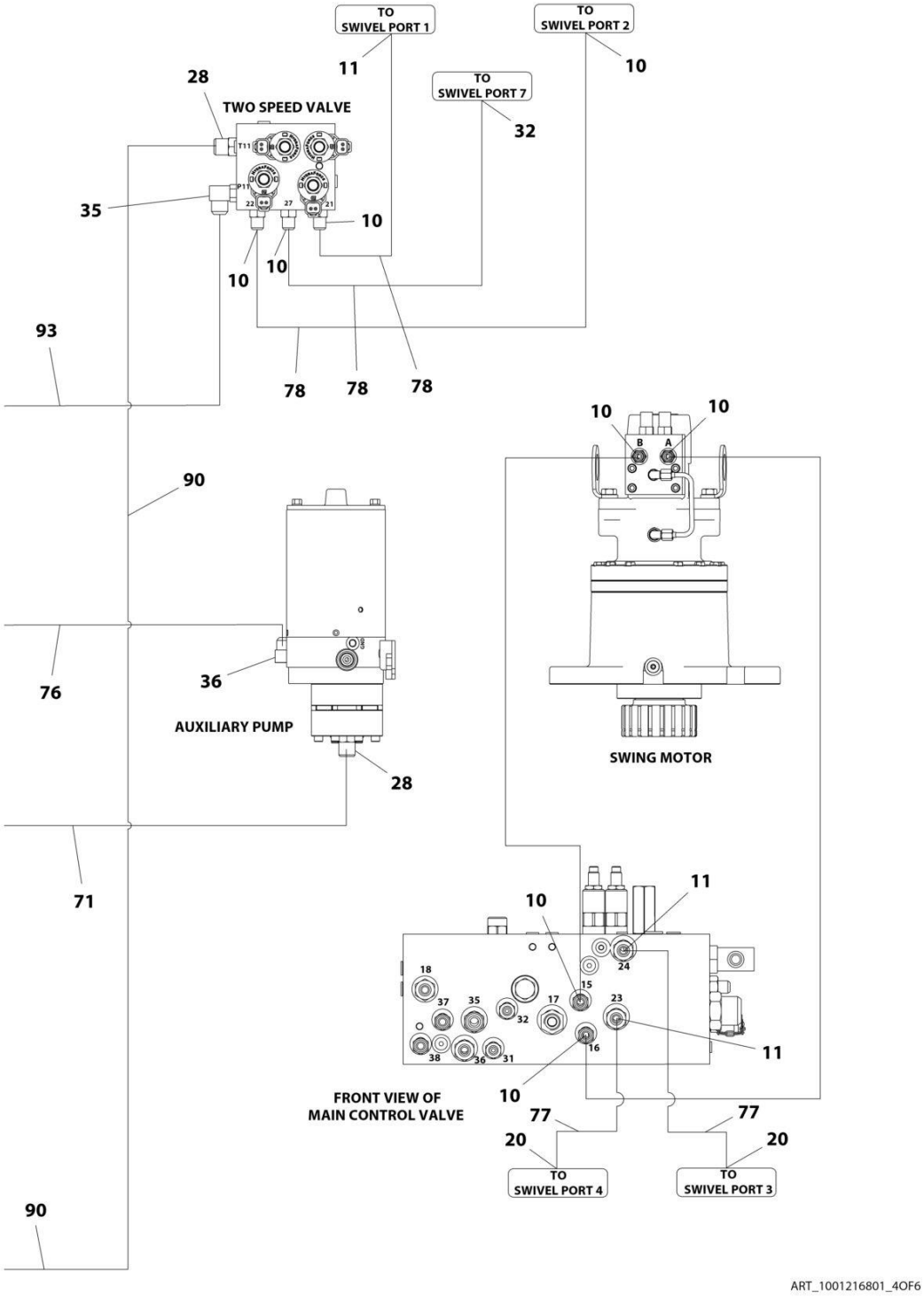
TO SWIVEL PORT 1
TO SWIVEL PORT 2
TO SWIVEL PORT 7
TWO SPEED VALVE
AUXILIARY PUMP
SWING MOTOR
FRONT VIEW OF MAIN CONTROL VALVE
TO SWIVEL PORT 4
TO SWIVEL PORT 3
ART_1001216801_4OF6

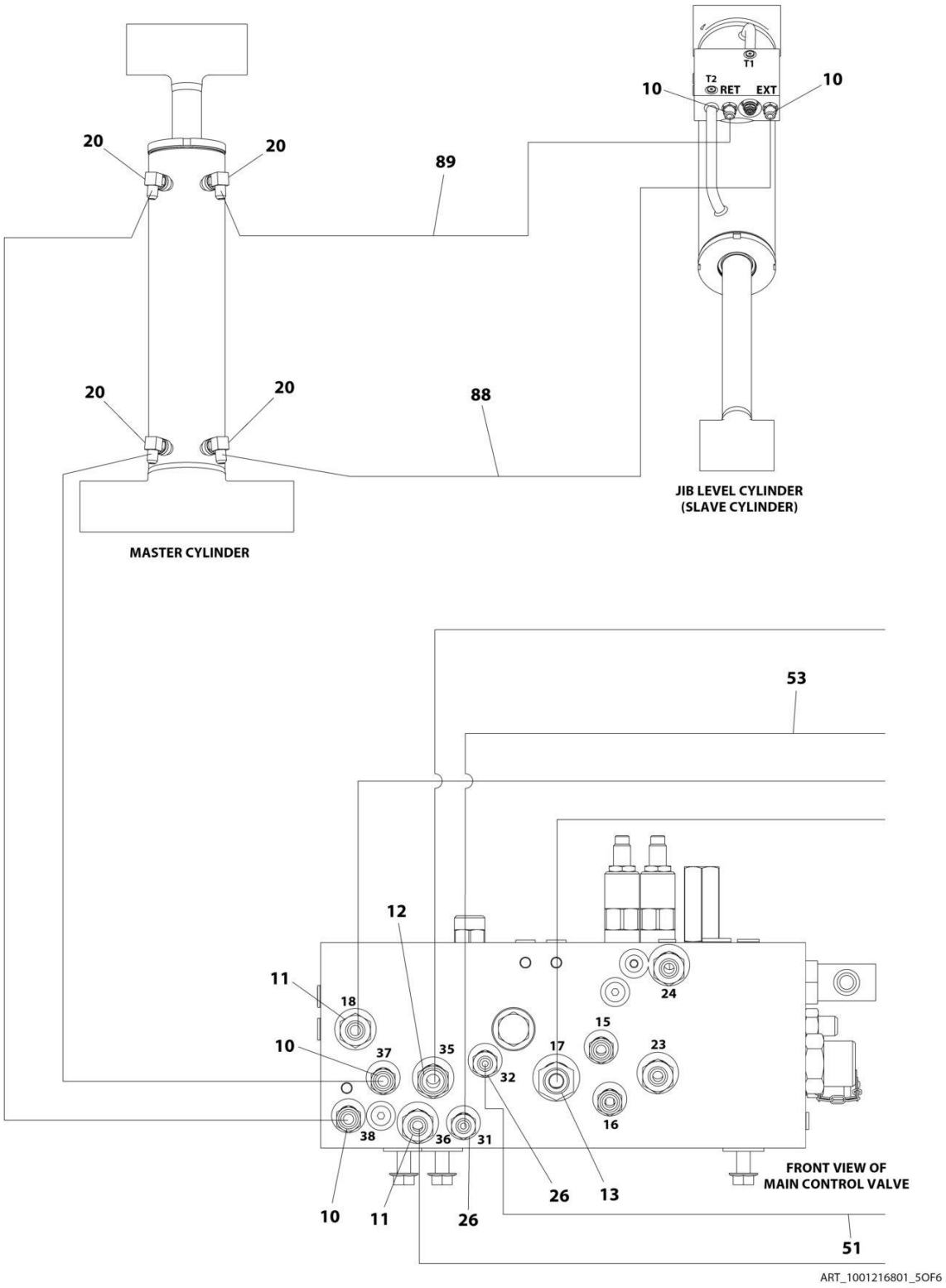
T1
T2
RET
EXT
10
10
20
20
89
20
20
88
JIB LEVEL CYLINDER
(SLAVE CYLINDER)
MASTER CYLINDER
53
12
11
18
10
37
35
32
17
15
23
24
16
38
36
31
10
11
26
26
13
FRONT VIEW OF
MAIN CONTROL VALVE
51
ART_1001216801_5OF6

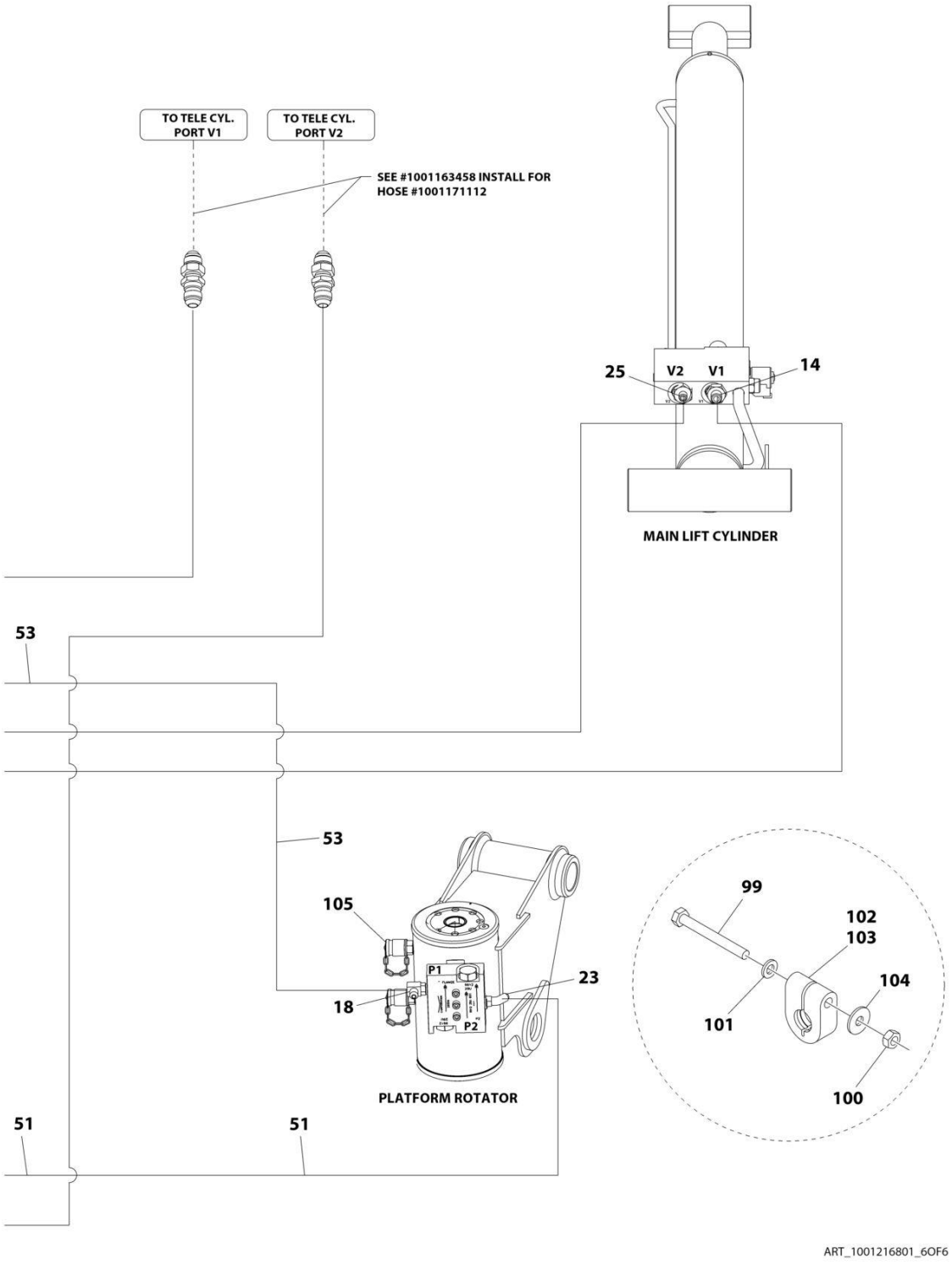
TO TELE CYL. PORT V1
TO TELE CYL. PORT V2
SEE #1001163458 INSTALL FOR HOSE #1001171112
25
V2
V1
14
MAIN LIFT CYLINDER
53
53
105
P1
23
18
P2
PLATFORM ROTATOR
99
102
103
104
101
100
51
51
ART_1001216801_6OF6

FIGURE 7-2. 400S 2WD HYDRAULIC SYSTEM INSTALLATION (SN 0300220610 through 0300272360)

ITEM	PART NUMBER	QTY	DESCRIPTION	REV
	1001216801	Ref	400S 2WD HYDRAULIC SYSTEM INSTALLATION	D
2	2110810	4	Fitting, Straight ORFS/ORB	
3	2110812	4	Fitting, Straight ORFS/ORB	
4	2111216	5	Fitting, Straight ORFS/ORB	
5	2131212	2	Fitting, 90 ORFS/ORB	
6	2131216	1	Fitting, 90 ORFS/ORB	
8	1001202910	2	Fitting, Straight MORB	
9	2220366	2	Fitting, 90 JIC/ORB	
10	2220371	12	Fitting, Straight JIC/ORB	
11	2220372	8	Fitting, Straight JIC/ORB	
12	2220373	5	Fitting, Straight JIC/ORB	
13	2220374	2	Fitting, Straight JIC/ORB **(SN 0300220610 through 0300226846)**	
13	2220374	3	Fitting, Straight JIC/ORB **(SN 0300226847 through 0300272360, Except SN 0300272174 through 0300272184)**	
14	2220375	2	Fitting, Straight JIC/ORB **(SN 0300220610 through 0300226846)**	
14	2220375	1	Fitting, Straight JIC/ORB **(SN 0300226847 through 0300272360, Except SN 0300272174 through 0300272184)**	
15	2220377	3	Fitting, Straight JIC/ORB	
16	2220415	2	Fitting, Straight JIC/ORB	
17	2220451	1	Fitting, Straight JIC/ORB	
18	2220466	3	Fitting, 90 JIC/ORB	
19	2220468	2	Fitting, Straight JIC/ORB	
20	2220473	8	Fitting, 90 JIC/ORB	
22	2220501	2	Fitting, 45 JIC/ORB	
23	2220502	1	Fitting, 45 JIC/ORB	
25	2220577	1	Fitting, Straight JIC/ORB **(SN 0300220610 through 0300226846)**	
25	2220497	1	Fitting, Straight JIC/ORB **(SN 0300226847 through 0300272360, Except SN 0300272174 through 0300272184)**	
26	2220582	3	Fitting, Straight JIC/ORB	
27	2220238	2	Plug ORB	
28	2220600	2	Fitting, Straight JIC/ORB	
29	1001197272	1	Fitting, Tee JIC/ORB/JIC	
32	2220628	1	Fitting, 90 JIC/ORB	
34	2220695	1	Fitting, Tee JIC/ORB/JIC	
35	2220726	1	Fitting, 90 JIC/ORB	
36	2220775	1	Fitting, 90 JIC/ORB	
37	2220237	1	Plug ORB	
38	2220906	1	Fitting, 90 JIC/ORB	
39	2220923	2	Fitting, Straight JIC/ORB	
40	2220946	2	Fitting, Straight JIC/ORB	
41	2220947	2	Fitting, Straight JIC/ORB **(SN 0300220610 through 0300222808)**	
41	2220947	1	Fitting, Straight JIC/ORB **(SN 0300222809 through 0300272360, Except SN 0300272174 through 0300272184)**	
42	2220998	2	Fitting, Straight JIC/ORB	
44	4240018	13	Tie-Strap (Not Shown)	
47	80633030	2	Clamp	
49	1001098928	1	Clamp (Not Shown)	
50	1001172692	2	Hose	
51	1001172694	1	Hose	
52	1001172695	2	Hose	

ITEM	PART NUMBER	QTY	DESCRIPTION	REV
53	1001172696	1	Hose	
54	1001172697	4	Hose	
57	1001197284	1	Hose	
69	1001207332	1	Hose	
70	1001216655	1	Hose	
71	1001172716	1	Hose	
72	1001172717	1	Hose	
73	1001172718	1	Hose	
74	1001172719	1	Hose	
75	1001207333	1	Hose	
76	1001172721	1	Hose	
77	1001172722	2	Hose	
78	1001172723	3	Hose	
79	1001173898	1	Hose	
80	1001173899	1	Hose **(SN 0300220610 through 0300222808)**	
80	2752500	1	Hose **(SN 0300222809 through 0300272360, Except SN 0300272174 through 0300272184)**	
88	1001173909	1	Hose	
89	1001173937	1	Hose	
90	1001193654	1	Hose	
91	1001207331	1	Hose **(SN 0300220610 through 0300222808)**	
91	1001172713	1	Hose **(SN 0300222809 through 0300226923)**	
91	1001207332	1	Hose **(SN 0300226924 through 0300272360, Except SN 0300272174 through 0300272184)**	
92	1001181074	1	Hose	
93	1001181075	1	Hose	
94	1001184542	1	Hose	
95	1001184543	1	Hose	
96	1001184561	1	Hose	
97	1001184562	1	Hose	
98	1001184563	1	Hose	
99	0700619	2	Bolt M6 x 55	
100	3290601	2	Nut M6 x 1	
101	4811700	2	Washer M6	
102	1001191275	1	Clamp	
103	1001191276	1	Clamp	
104	4811702	2	Washer M6	
105	2221086	3	Fitting, Diagnostic Test Port	
114	88662037	1	Fitting, Straight JIC/ORB **(SN 0300222809 through 0300272360, Except SN 0300272174 through 0300272184)**	

FIGURE 7-3. 400S 4WD HYDRAULIC SYSTEM INSTALLATION (WITHOUT ARCTIC PACKAGE) (SN 0300203771 through 0300214505)

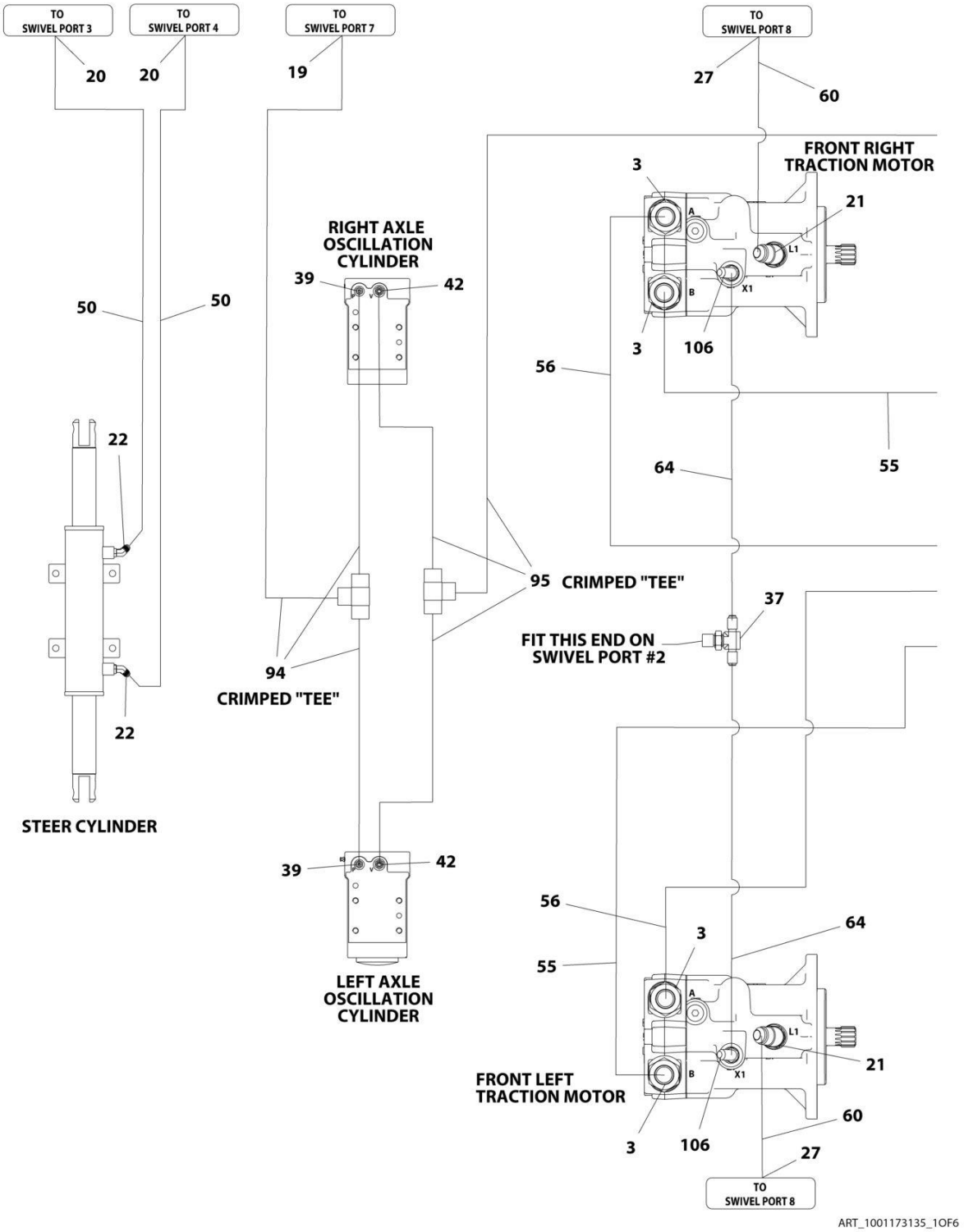

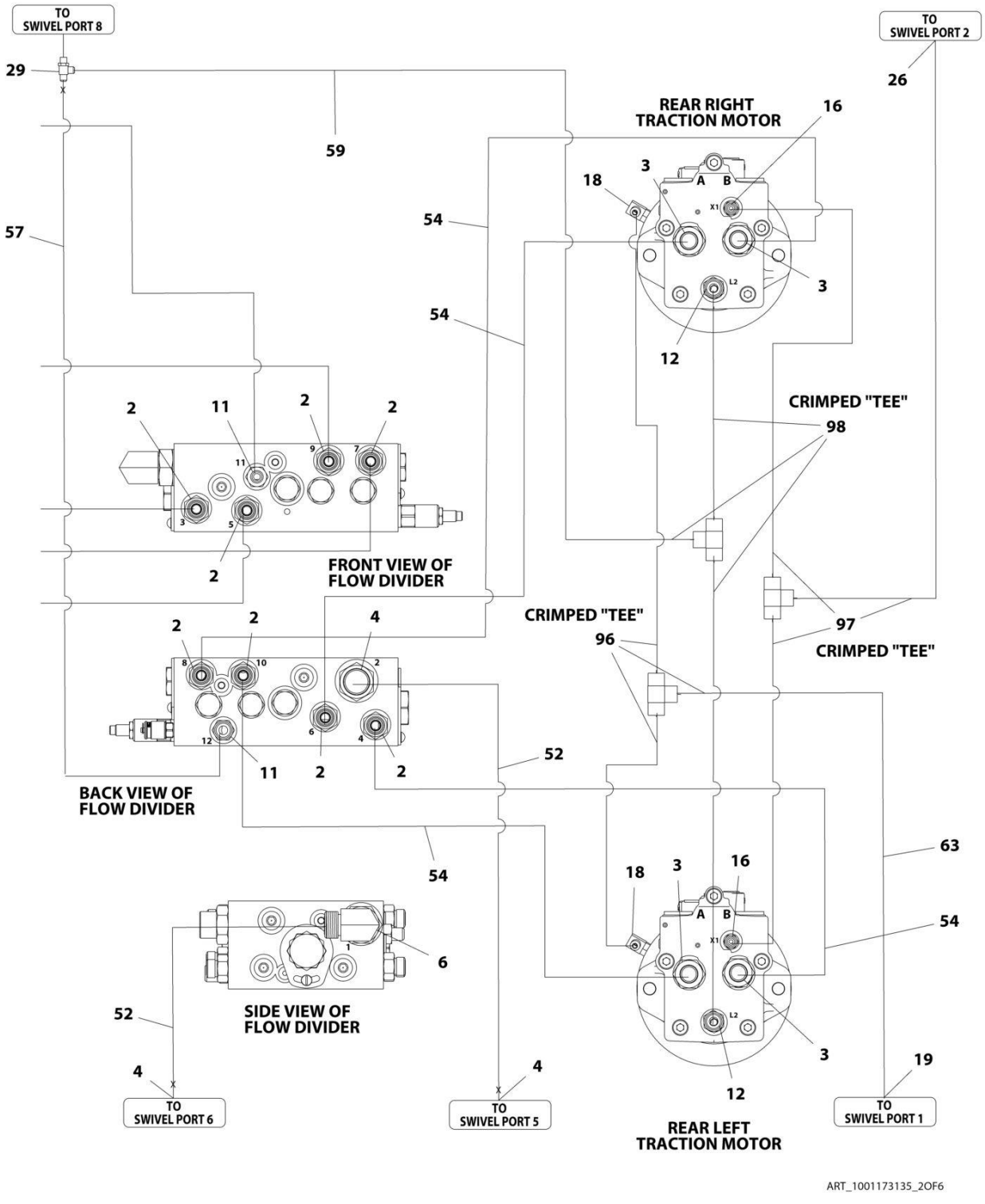
TO SWIVEL PORT 8
TO SWIVEL PORT 2
29
26
59
REAR RIGHT TRACTION MOTOR
16
3
18
A
B
X1
L2
57
54
54
3
12
CRIMPED "TEE"
98
2
11
2
2
9
7
11
3
5
2
FRONT VIEW OF FLOW DIVIDER
CRIMPED "TEE"
96
97
CRIMPED "TEE"
2
2
4
8
10
2
12
6
4
11
2
2
52
BACK VIEW OF FLOW DIVIDER
54
63
18
3
16
54
6
1
SIDE VIEW OF FLOW DIVIDER
52
3
19
4
4
12
TO SWIVEL PORT 6
TO SWIVEL PORT 5
TO SWIVEL PORT 1
REAR LEFT TRACTION MOTOR
ART_1001173135_2OF6

SECTION 7 - HYDRAULIC

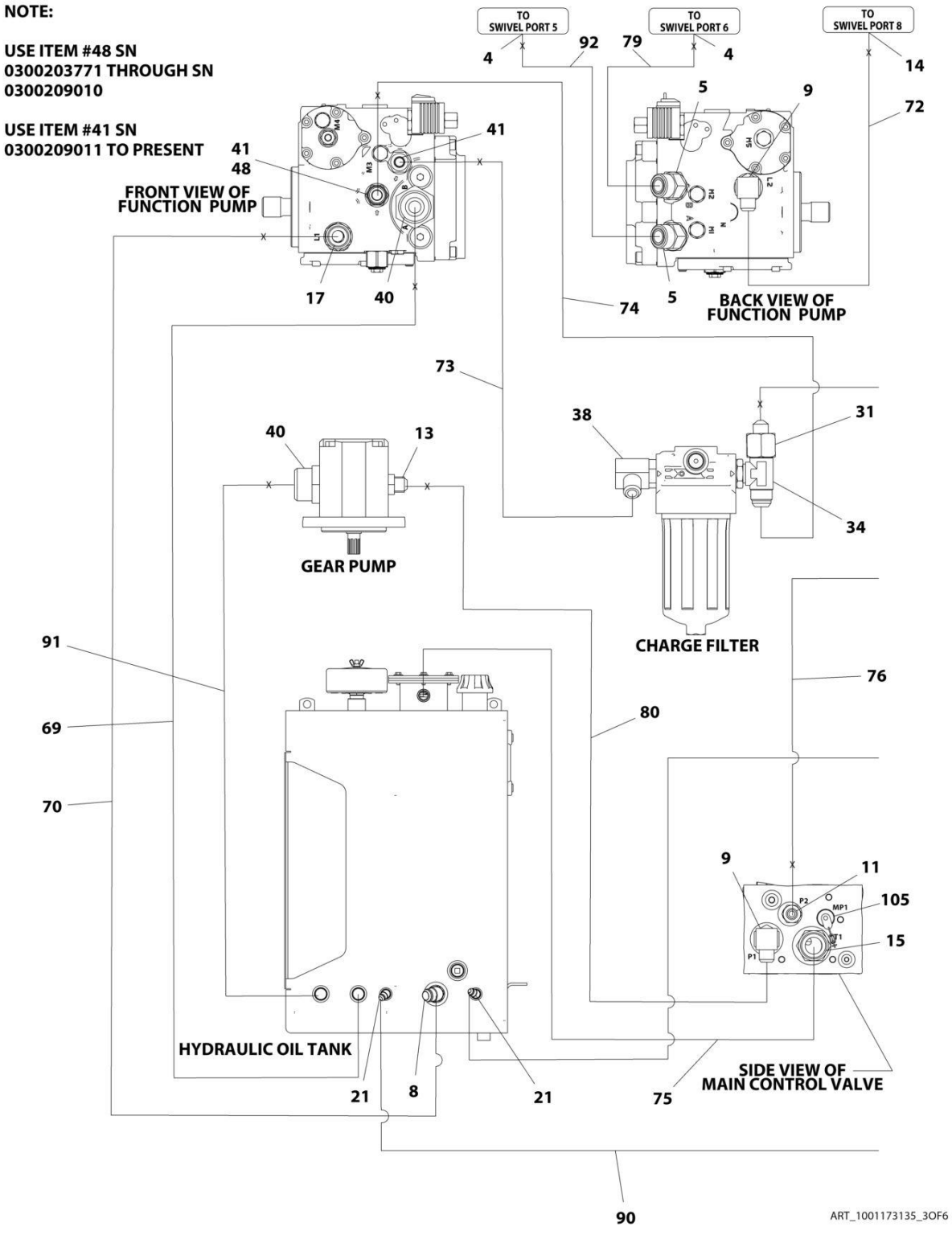

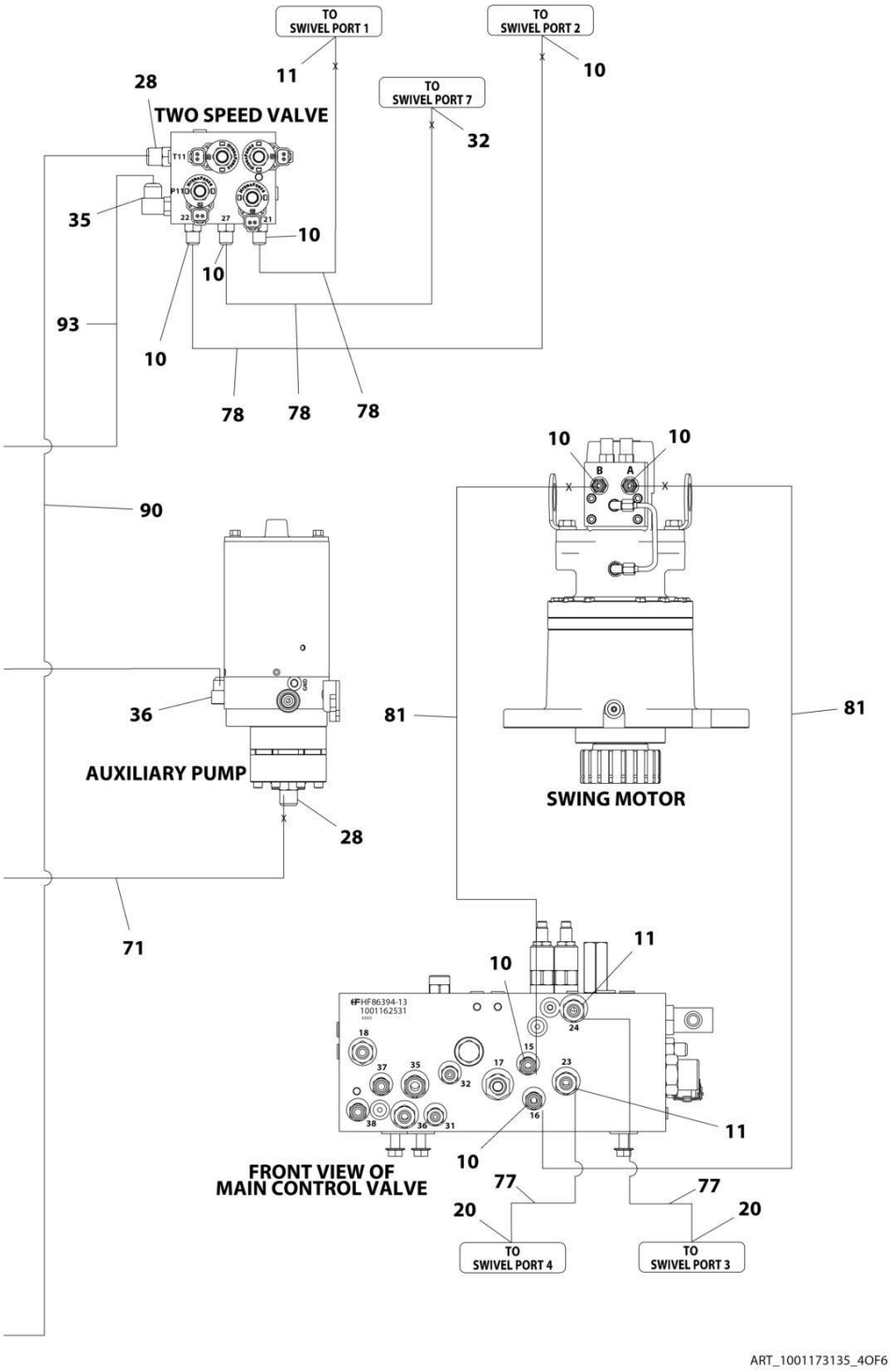
TO SWIVEL PORT 1
TO SWIVEL PORT 2
TO SWIVEL PORT 7
11
10
32
28
TWO SPEED VALVE
35
10
10
93
10
78
78
78
10
10
90
36
AUXILIARY PUMP
28
71
81
81
SWING MOTOR
11
10
11
10
77
77
20
20
FRONT VIEW OF MAIN CONTROL VALVE
TO SWIVEL PORT 4
TO SWIVEL PORT 3
ART_1001173135_4OF6

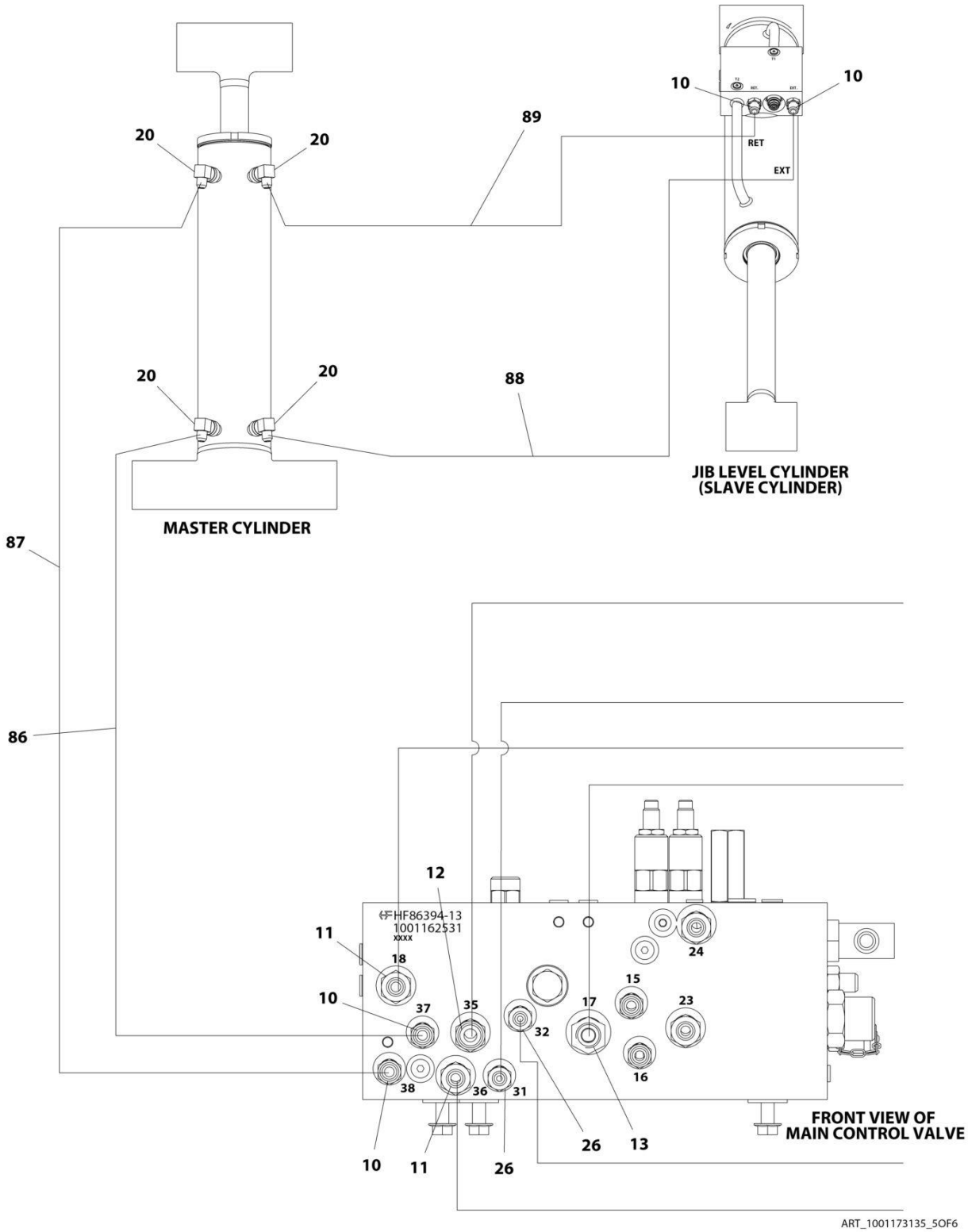
10
10
RET
EXT
89
20
20
20
20
88
JIB LEVEL CYLINDER
(SLAVE CYLINDER)
MASTER CYLINDER
87
86
12
HF86394-13
1001162531
xxxx
11
18
10
37
35
32
17
15
23
24
16
38
36
31
10
11
26
26
13
FRONT VIEW OF
MAIN CONTROL VALVE
ART_1001173135_5OF6

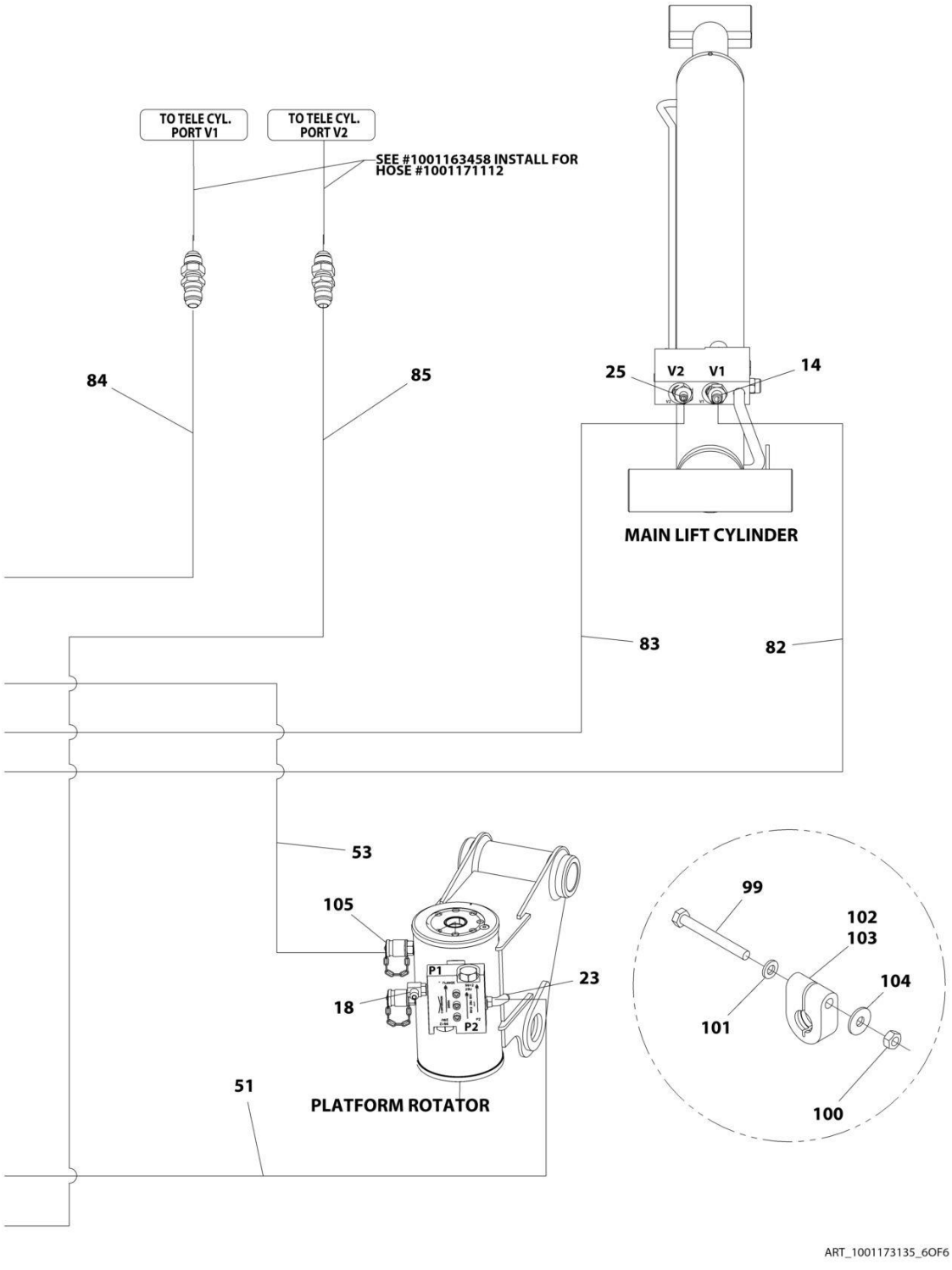
TO TELE CYL. PORT V1
TO TELE CYL. PORT V2
SEE #1001163458 INSTALL FOR HOSE #1001171112
84
85
25
V2
V1
14
MAIN LIFT CYLINDER
83
82
53
105
P1
P2
23
18
51
PLATFORM ROTATOR
99
102
103
104
101
100
ART_1001173135_6OF6

FIGURE 7-3. 400S 4WD HYDRAULIC SYSTEM INSTALLATION (WITHOUT ARCTIC PACKAGE) (SN 0300203771 through 0300214505)

ITEM	PART NUMBER	QTY	DESCRIPTION	REV
	1001173135	Ref	400S 4WD HYDRAULIC SYSTEM INSTALLATION	K
2	2110810	8	Fitting, Straight ORFS/ORB	
3	2110812	8	Fitting, Straight ORFS/ORB	
4	2111216	5	Fitting, Straight ORFS/ORB	
5	2131212	2	Fitting, 90 ORFS/ORB **(SN 0300203771 through 0300209010)**	
5	2151212	2	Fitting, 45 JIC/ORB **(SN 0300209011 through 0300214505)**	
6	2131216	1	Fitting, 90 ORFS/ORB	
8	2220365	1	Fitting, 45 JIC/ORB	
9	2220366	2	Fitting, 90 JIC/ORB	
10	2220371	12	Fitting, Straight JIC/ORB	
11	2220372	8	Fitting, Straight JIC/ORB	
12	2220373	3	Fitting, Straight JIC/ORB	
13	2220374	2	Fitting, Straight JIC/ORB	
14	2220375	2	Fitting, Straight JIC/ORB	
15	2220377	1	Fitting, Straight JIC/ORB	
16	2220415	2	Fitting, Straight JIC/ORB	
17	2220451	1	Fitting, Straight JIC/ORB	
18	2220466	3	Fitting, 90 JIC/ORB	
19	2220468	2	Fitting, Straight JIC/ORB	
20	2220473	8	Fitting, 90 JIC/ORB	
21	2220500	4	Fitting, 45 JIC/ORB	
22	2220501	2	Fitting, 45 JIC/ORB	
23	2220502	1	Fitting, 45 JIC/ORB	
25	2220577	1	Fitting, Straight JIC/ORB	
26	2220582	3	Fitting, Straight JIC/ORB	
27	2220596	2	Fitting, 90 JIC/ORB	
28	2220600	2	Fitting, Straight JIC/ORB	
29	1001197272	1	Fitting, Tee JIC/ORB/JIC	
31	2220622	1	Fitting, Straight JIC/FSJIC **(SN 0300203771 through 0300209010)**	
32	2220628	1	Fitting, 90 JIC/ORB	
34	2220695	1	Fitting, Tee JIC/ORB/JIC	
35	2220726	1	Fitting, 90 JIC/ORB	
36	2220775	1	Fitting, 90 JIC/ORB	
37	1001175024	1	Fitting, Tee JIC/JIC/ORB	
38	2220906	1	Fitting, 90 JIC/ORB	
39	2220923	2	Fitting, Straight JIC/ORB	
40	2220946	2	Fitting, Straight JIC/ORB	
41	2220947	2	Fitting, Straight JIC/ORB	
42	2220998	2	Fitting, Straight JIC/ORB	
44	4240018	20	Tie-Strap	
47	80633030	2	Clamp	
48	88662037	1	Fitting, Straight JIC/ORB **(SN 0300203771 through 0300209010)**	
49	1001098928	1	Clamp	
50	1001172692	2	Hose	
51	1001172694	1	Hose	
52	1001172695	2	Hose	
53	1001172696	1	Hose	
54	1001172697	4	Hose	
55	1001172698	2	Hose	

ITEM	PART NUMBER	QTY	DESCRIPTION	REV
56	1001172699	2	Hose	
57	1001197284	1	Hose	
60	1001172703	2	Hose	
64	1001172707	2	Hose	
69	1001172713	1	Hose	
70	1001172715	1	Hose	
71	1001172716	1	Hose	
72	1001172717	1	Hose	
73	1001172718	1	Hose	
74	1001172719	1	Hose	
75	1001172720	1	Hose	
76	1001172721	1	Hose	
77	1001172722	2	Hose	
78	1001172723	3	Hose	
79	1001173898	1	Hose	
80	1001173899	1	Hose	
81	1001173900	2	Hose	
82	1001173901	1	Hose	
83	1001173902	1	Hose	
84	1001173903	1	Hose	
85	1001173904	1	Hose	
86	1001173907	1	Hose	
87	1001173908	1	Hose	
88	1001173909	1	Hose	
89	1001173937	1	Hose	
90	1001173938	1	Hose	
91	1001181073	1	Hose	
92	1001181074	1	Hose	
93	1001181075	1	Hose	
94	1001184542	1	Hose	
95	1001184543	1	Hose	
96	1001184561	1	Hose	
97	1001184562	1	Hose	
98	1001184563	1	Hose	
99	0700619	2	Bolt, M6 x 55	
100	3290601	2	Nut, M6 x 1	
101	4811700	2	Washer, M6	
102	1001191275	1	Clamp	
103	1001191276	1	Clamp	
104	4811702	2	Washer, M6	
105	2221086	3	Fitting, Diagnostic Test Port	
106	2221040	2	Fitting, 45 JIC/ORB **(SN 0300209011 through 0300214505)**	

FIGURE 7-4. 400S 4WD HYDRAULIC SYSTEM INSTALLATION (WITH ARCTIC PACKAGE) (SN 0300203771 through 0300214505)

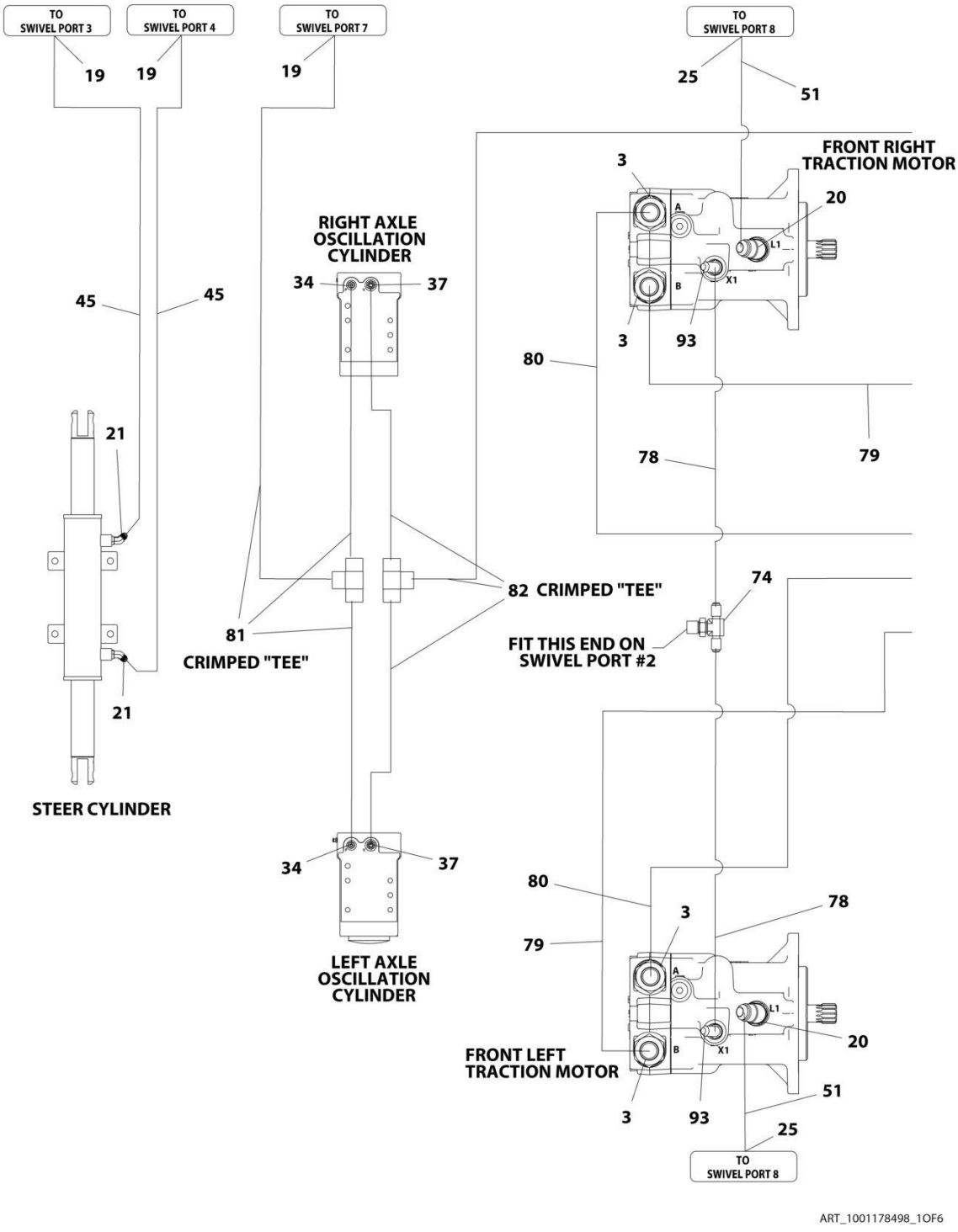

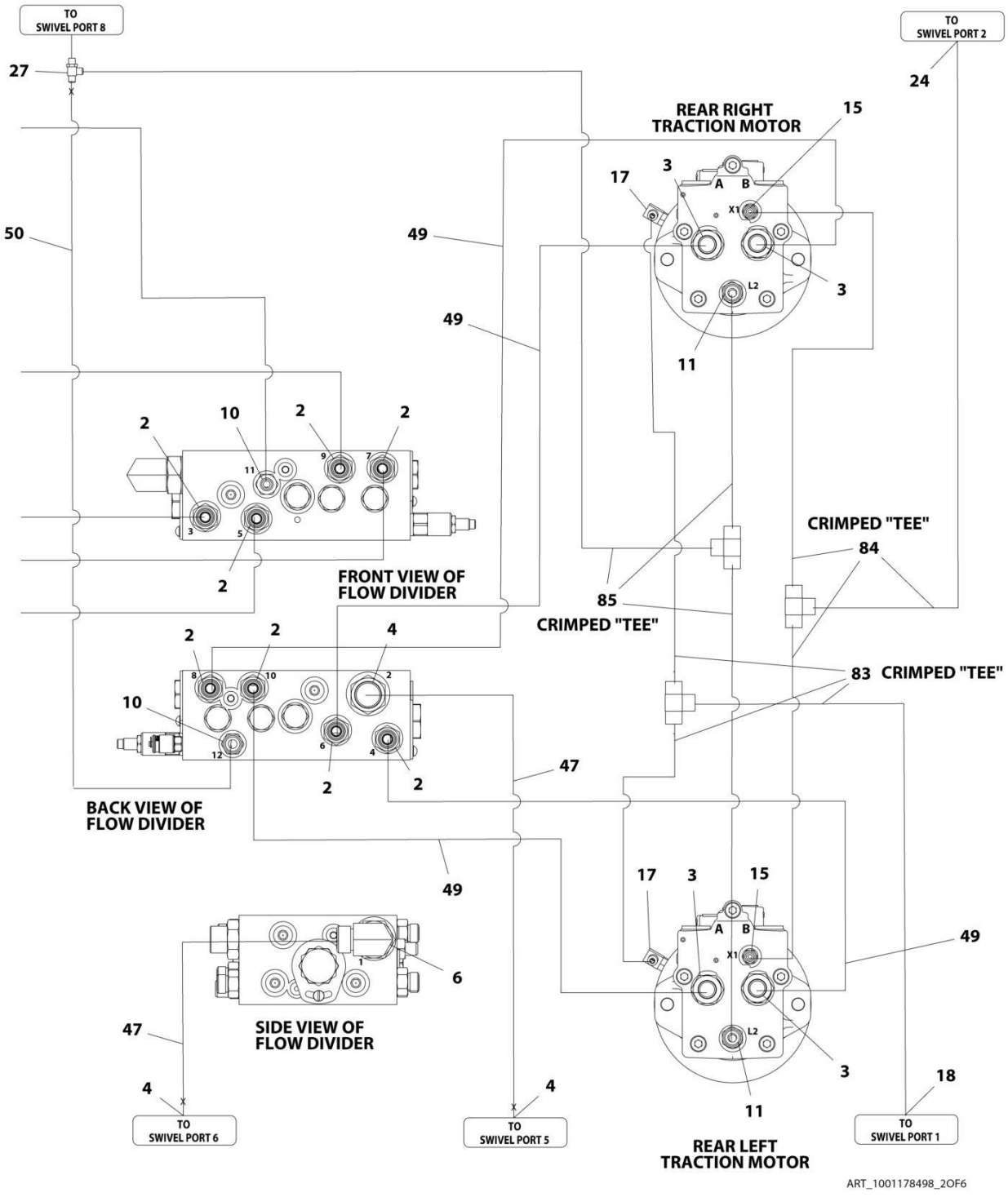
TO SWIVEL PORT 8
TO SWIVEL PORT 2
27
24
REAR RIGHT TRACTION MOTOR
15
17
3
A
B
X1
50
49
L2
3
49
11
2
10
2
2
11
9
7
3
5
2
FRONT VIEW OF FLOW DIVIDER
CRIMPED "TEE"
84
85
CRIMPED "TEE"
2
2
4
8
10
2
10
6
4
12
2
2
83 CRIMPED "TEE"
47
BACK VIEW OF FLOW DIVIDER
49
17
3
15
A
B
X1
49
1
6
47
SIDE VIEW OF FLOW DIVIDER
L2
3
18
4
4
11
TO SWIVEL PORT 6
TO SWIVEL PORT 5
TO SWIVEL PORT 1
REAR LEFT TRACTION MOTOR
ART_1001178498_2OF6

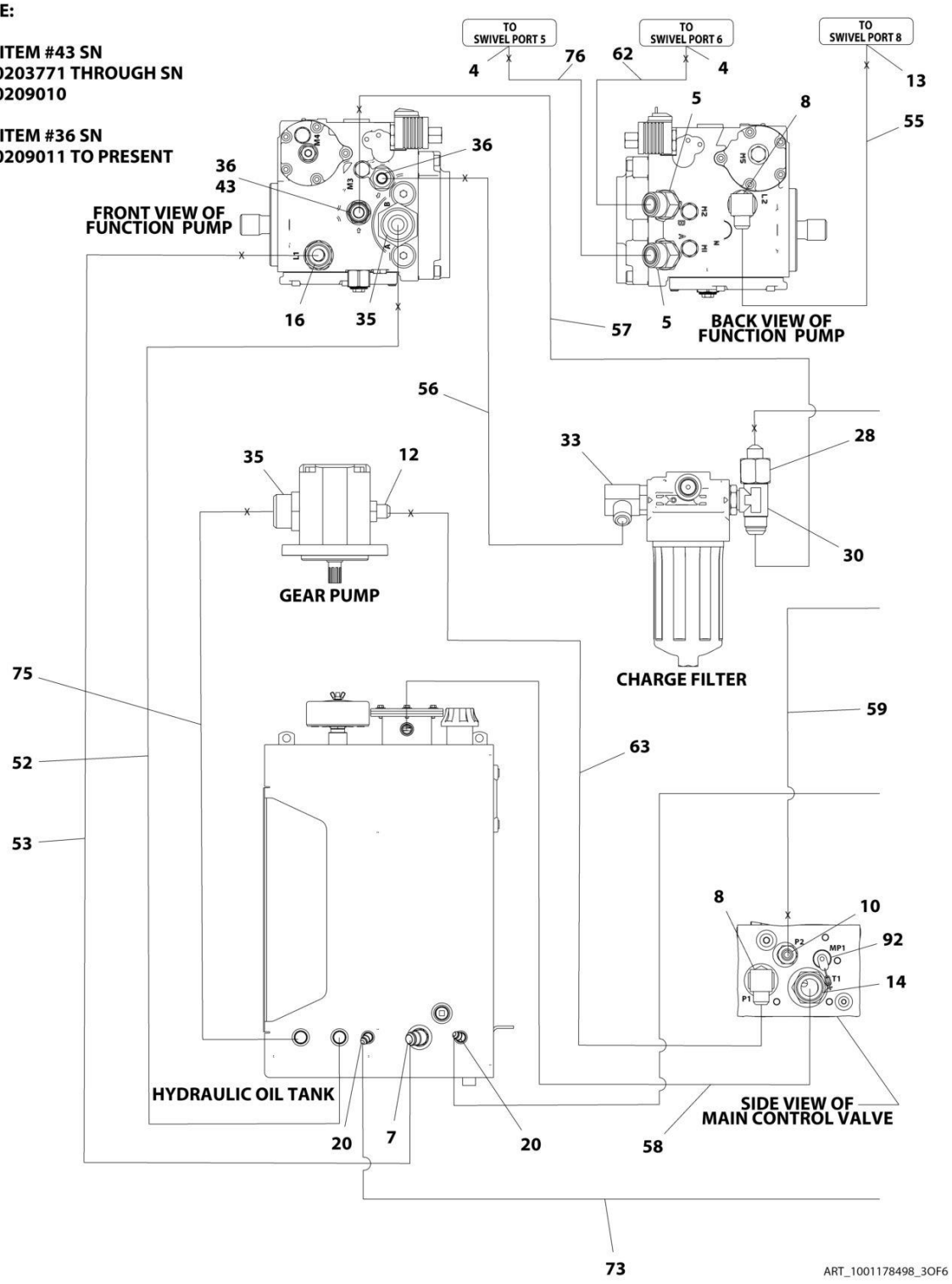
NOTE:
USE ITEM #43 SN 0300203771 THROUGH SN 0300209010
USE ITEM #36 SN 0300209011 TO PRESENT
TO SWIVEL PORT 5
TO SWIVEL PORT 6
TO SWIVEL PORT 8
4
76
62
4
13
5
8
55
36
36
43
FRONT VIEW OF FUNCTION PUMP
16
35
57
5
BACK VIEW OF FUNCTION PUMP
56
33
28
35
12
30
GEAR PUMP
CHARGE FILTER
75
59
52
63
53
8
10
92
14
HYDRAULIC OIL TANK
20
7
20
58
SIDE VIEW OF MAIN CONTROL VALVE
73
ART_1001178498_3OF6

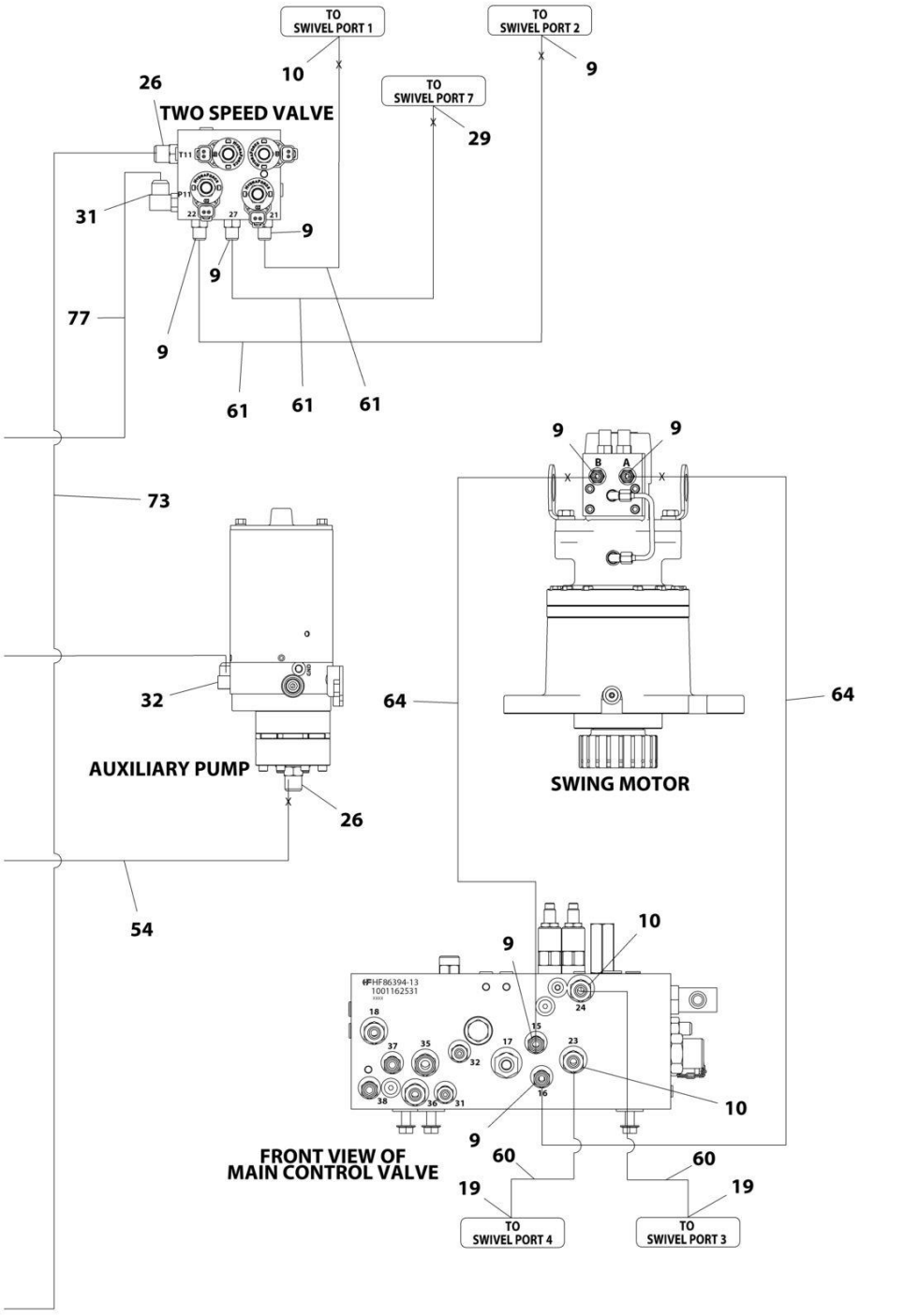

ART_1001178498_4OF6

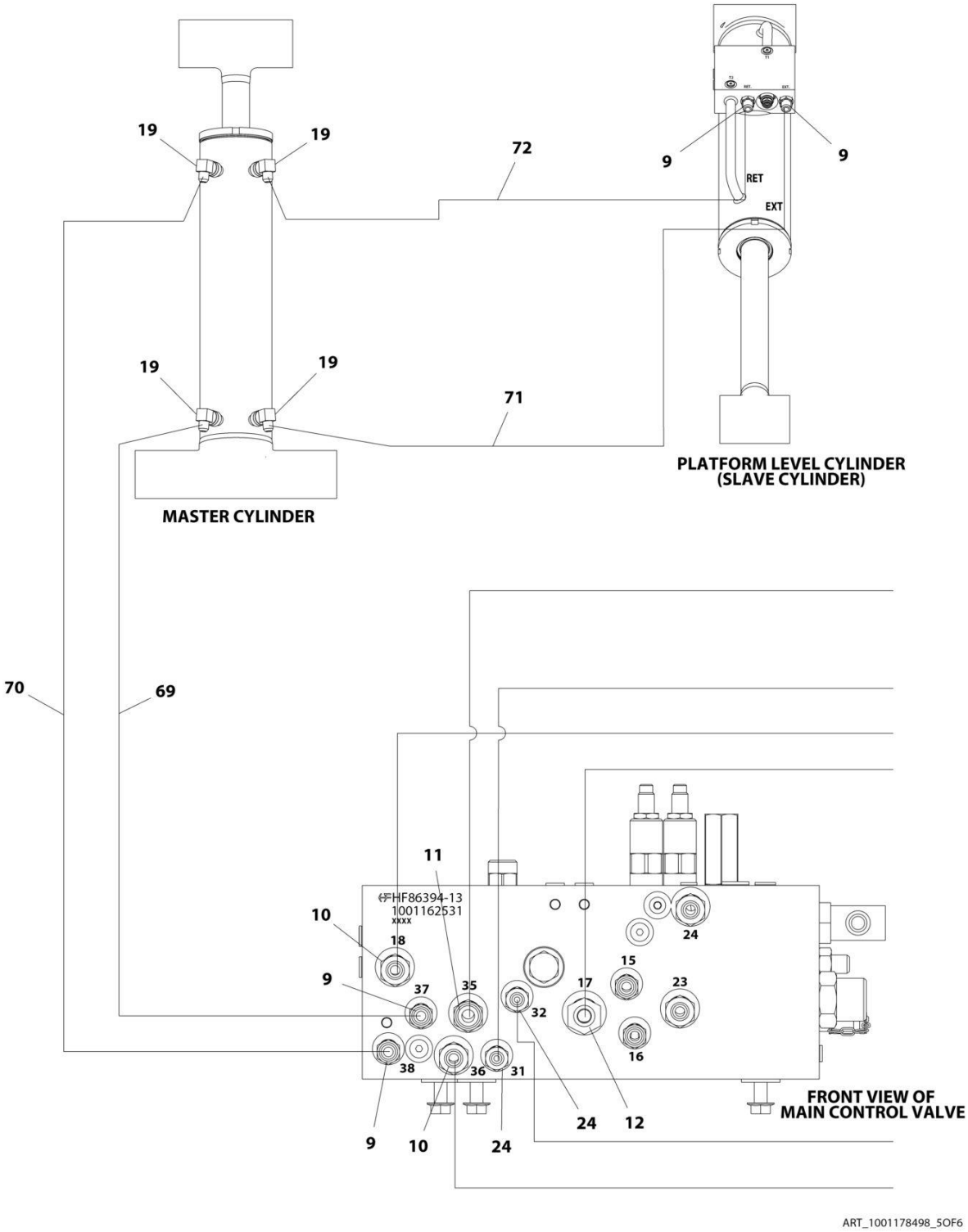
19
19
72
9
9
RET
EXT
19
19
71
MASTER CYLINDER
PLATFORM LEVEL CYLINDER
(SLAVE CYLINDER)
70
69
11
HF86394-13
1001162531
XXXX
10
18
9
37
35
32
17
15
23
24
16
38
36
31
9
10
24
24
12
FRONT VIEW OF
MAIN CONTROL VALVE
ART_1001178498_5OF6

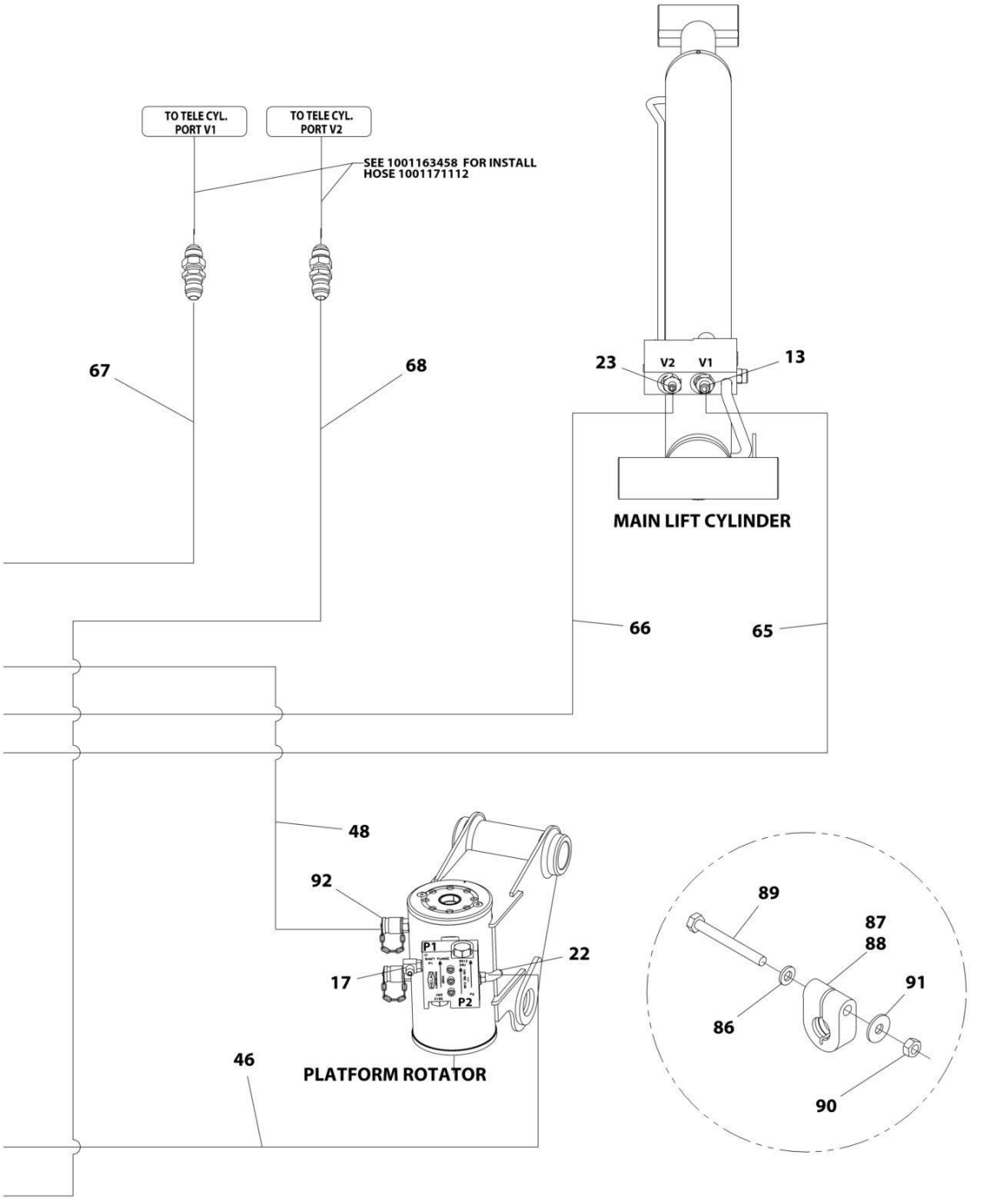
TO TELE CYL. PORT V1
TO TELE CYL. PORT V2
SEE 1001163458 FOR INSTALL HOSE 1001171112
67
68
23
V2
V1
13
MAIN LIFT CYLINDER
66
65
48
92
P1
22
17
P2
PLATFORM ROTATOR
46
89
87
88
91
86
90
ART_1001178498_6OF6

FIGURE 7-4. 400S 4WD HYDRAULIC SYSTEM INSTALLATION (WITH ARCTIC PACKAGE) (SN 0300203771 through 0300214505)

ITEM	PART NUMBER	QTY	DESCRIPTION	REV
	1001178498	Ref	HYDRAULIC SYSTEM INSTALLATION - 400S (WITH ARCTIC PACKAGE) **(SN 0300203771 through 0300214505)**	G
2	2110810	8	Fitting, Straight ORFS/ORB	
3	2110812	8	Fitting, Straight ORFS/ORB	
4	2111216	5	Fitting, Straight ORFS/ORB	
5	2131212	2	Fitting, 90 ORFS/ORB **(SN 0300203771 through 0300209010)**	
5	2151212	2	Fitting, 45 JIC/ORB **(SN 0300209011 through 0300272360, Except SN 0300272174 through 0300272184)**	
6	2131216	1	Fitting, 90 ORFS/ORB	
7	2220365	1	Fitting, 45 JIC/ORB	
8	2220366	2	Fitting, 90 JIC/ORB	
9	2220371	12	Fitting, Straight JIC/ORB	
10	2220372	8	Fitting, Straight JIC/ORB	
11	2220373	3	Fitting, Straight JIC/ORB	
12	2220374	2	Fitting, Straight JIC/ORB	
13	2220375	2	Fitting, Straight JIC/ORB	
14	2220377	1	Fitting, Straight JIC/ORB	
15	2220415	2	Fitting, Straight JIC/ORB	
16	2220451	1	Fitting, Straight JIC/ORB	
17	2220466	3	Fitting, 90 JIC/ORB	
18	2220468	2	Fitting, Straight JIC/ORB	
19	2220473	8	Fitting, 90 JIC/ORB	
20	2220500	4	Fitting, 45 JIC/ORB	
21	2220501	2	Fitting, 45 JIC/ORB	
22	2220502	1	Fitting, 45 JIC/ORB	
23	2220577	1	Fitting, Straight JIC/ORB	
24	2220582	3	Fitting, Straight JIC/ORB	
25	2220596	2	Fitting, 90 JIC/ORB	
26	2220600	2	Fitting, Straight JIC/ORB	
27	1001197272	1	Fitting, Tee JIC/ORB/JIC	
28	2220622	1	Fitting, Straight JIC/FSJIC **(SN 0300203771 through 0300209010)**	
29	2220628	1	Fitting, 90 JIC/ORB	
30	2220695	1	Fitting, Tee JIC/ORB/JIC	
31	2220726	1	Fitting, 90 JIC/ORB	
32	2220775	1	Fitting, 90 JIC/ORB	
33	2220906	1	Fitting, 90 JIC/ORB	
34	2220923	2	Fitting, Straight JIC/ORB	
35	2220946	2	Fitting, Straight JIC/ORB	
36	2220947	2	Fitting, Straight JIC/ORB	
37	2220998	2	Fitting, Straight JIC/ORB	
39	4240018	10	Tie-Strap	
42	80633030	2	Clamp	
43	88662037	1	Fitting, Straight JIC/ORB **(SN 0300203771 through 0300209010)**	
44	1001098928	1	Clamp	
45	1001172692	2	Hose	
46	1001172694	1	Hose	
47	1001172695	2	Hose	
48	1001172696	1	Hose	
49	1001172697	4	Hose	

ITEM	PART NUMBER	QTY	DESCRIPTION	REV
50	1001197284	1	Hose	
51	1001172703	2	Hose	
52	1001172713	1	Hose	
53	1001172715	1	Hose	
54	1001172716	1	Hose	
55	1001172717	1	Hose	
56	1001172718	1	Hose	
57	1001172719	1	Hose	
58	1001172720	1	Hose	
59	1001172721	1	Hose	
60	1001172722	2	Hose	
61	1001172723	3	Hose	
62	1001173898	1	Hose	
63	1001173899	1	Hose	
64	1001173900	2	Hose	
65	1001173901	1	Hose	
66	1001173902	1	Hose	
67	1001173903	1	Hose	
68	1001173904	1	Hose	
69	1001173907	1	Hose	
70	1001173908	1	Hose	
71	1001173909	1	Hose	
72	1001173937	1	Hose	
73	1001173938	1	Hose	
74	1001175024	1	Fitting, Tee JIC/JIC/ORB	
75	1001181073	1	Hose	
76	1001181074	1	Hose	
77	1001181075	1	Hose	
78	1001183216	2	Hose	
79	1001183217	2	Hose	
80	1001183218	2	Hose	
81	1001184542	1	Hose	
82	1001184543	1	Hose	
83	1001184561	1	Hose	
84	1001184562	1	Hose	
85	1001184563	1	Hose	
86	4811700	2	Washer, M6	
87	1001191275	1	Clamp	
88	1001191276	1	Clamp	
89	0700619	2	Bolt, M6 x 55	
90	3290601	2	Nut, M6 x 1	
91	4811702	2	Washer, M6	
92	2221086	3	Fitting, Diagnostic Test Port	
93	2221040	2	Fitting, 45 JIC/ORB **(SN 0300209011 through 0300214505)**	

FIGURE 7-5. 400S 4WD HYDRAULIC SYSTEM INSTALLATION (ALL MACHINES) (SN 0300214506 through 0300220609)

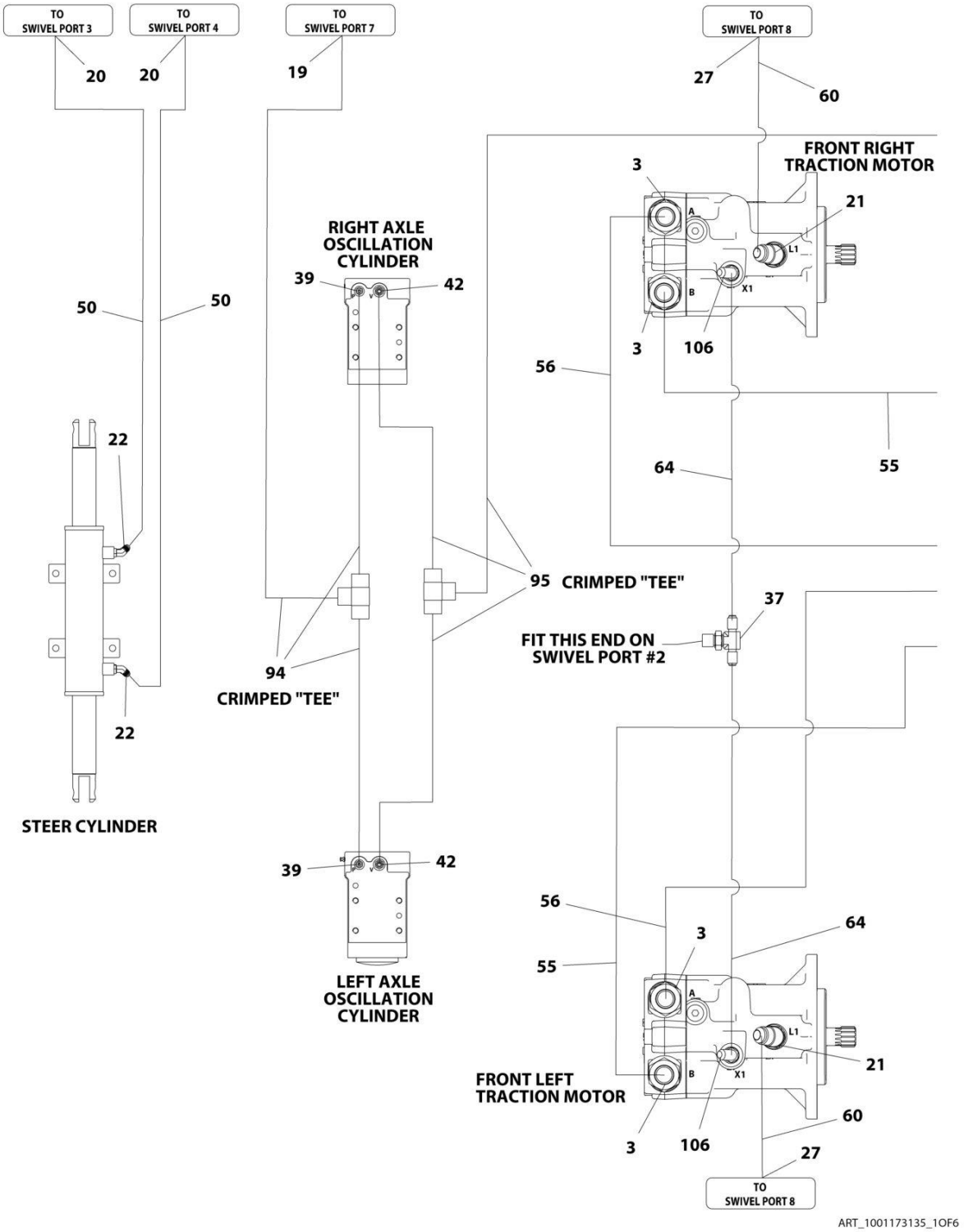

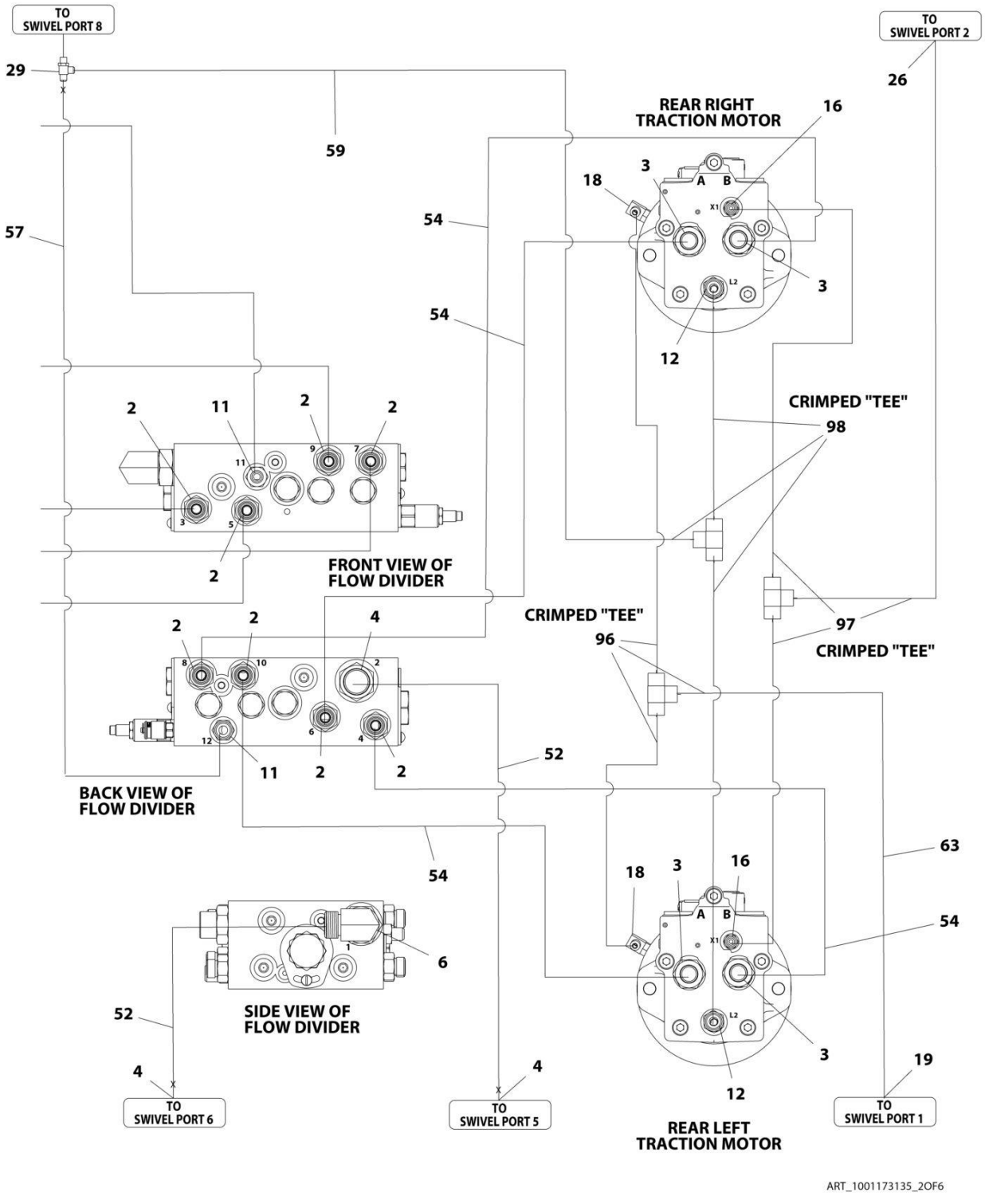
TO SWIVEL PORT 8
TO SWIVEL PORT 2
29
26
59
57
REAR RIGHT TRACTION MOTOR
16
18
3
54
12
CRIMPED "TEE"
98
FRONT VIEW OF FLOW DIVIDER
97
96
CRIMPED "TEE"
BACK VIEW OF FLOW DIVIDER
52
63
SIDE VIEW OF FLOW DIVIDER
6
19
TO SWIVEL PORT 6
TO SWIVEL PORT 5
TO SWIVEL PORT 1
REAR LEFT TRACTION MOTOR
ART_1001173135_2OF6

SECTION 7 - HYDRAULIC

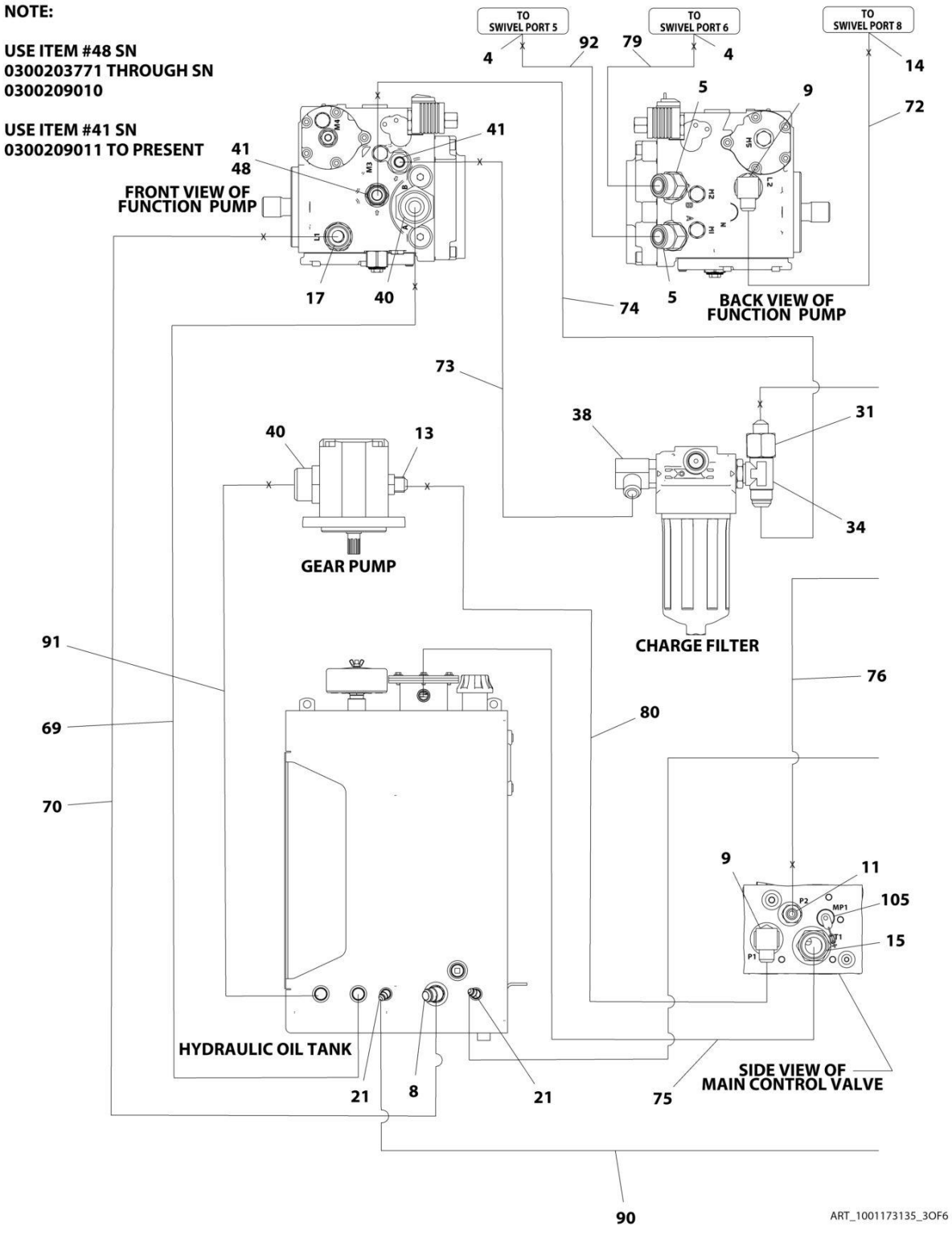

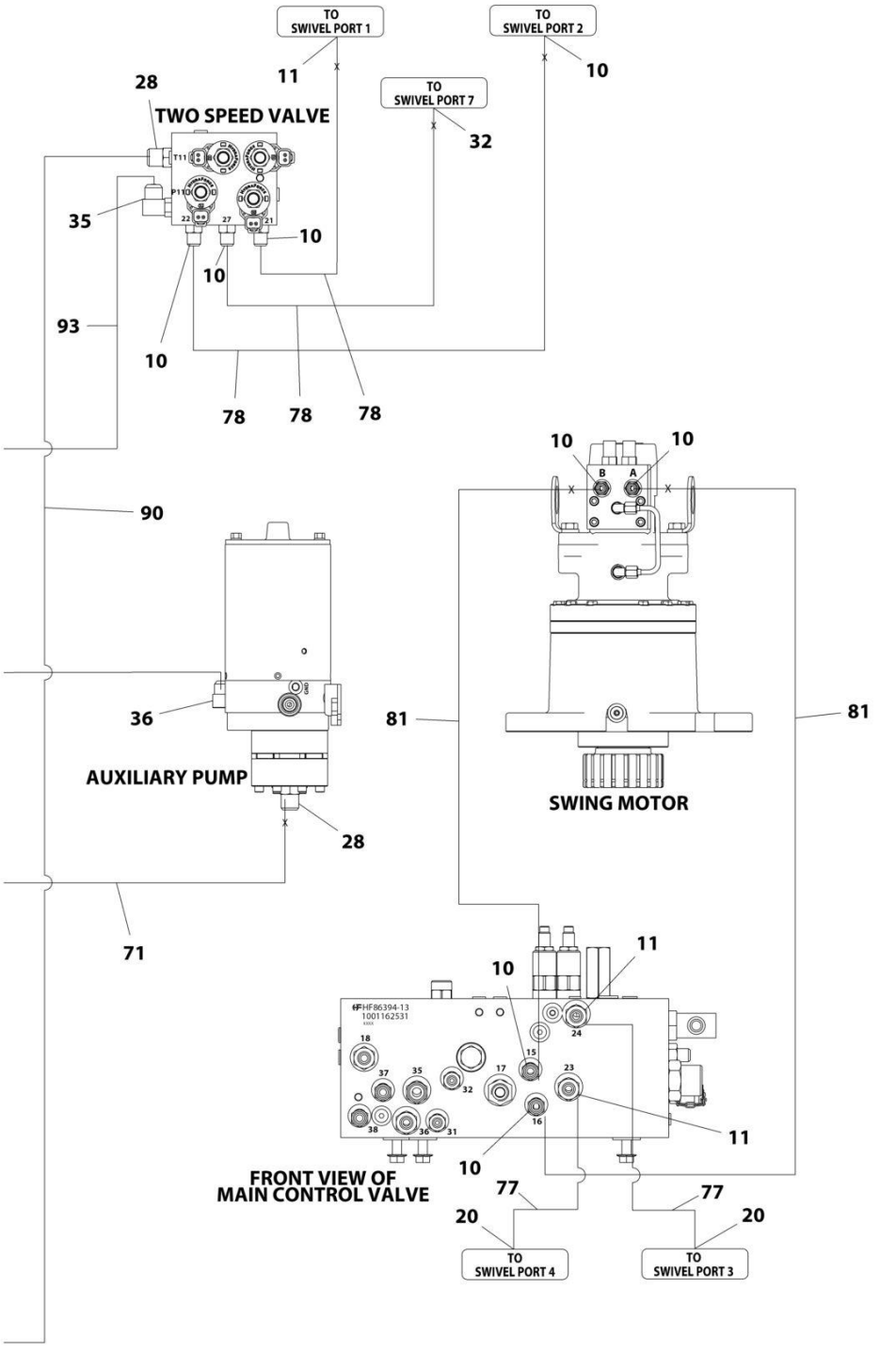

ART_1001173135_4OF6

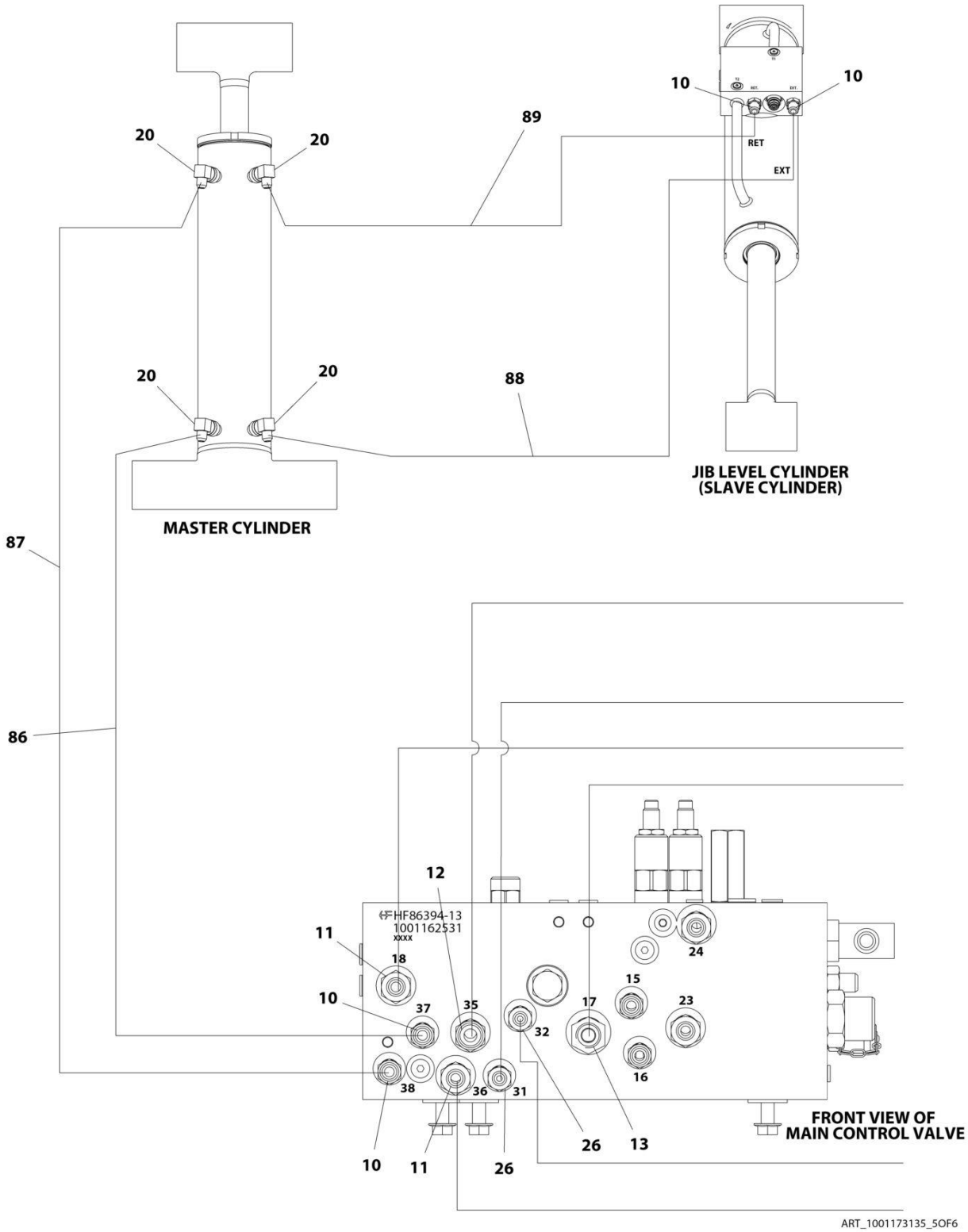
10
10
RET
EXT
89
20
20
20
20
88
JIB LEVEL CYLINDER
(SLAVE CYLINDER)
MASTER CYLINDER
87
86
12
HF86394-13
1001162531
xxxx
11
18
10
37
35
32
17
15
23
24
16
38
36
31
10
11
26
26
13
FRONT VIEW OF
MAIN CONTROL VALVE
ART_1001173135_5OF6

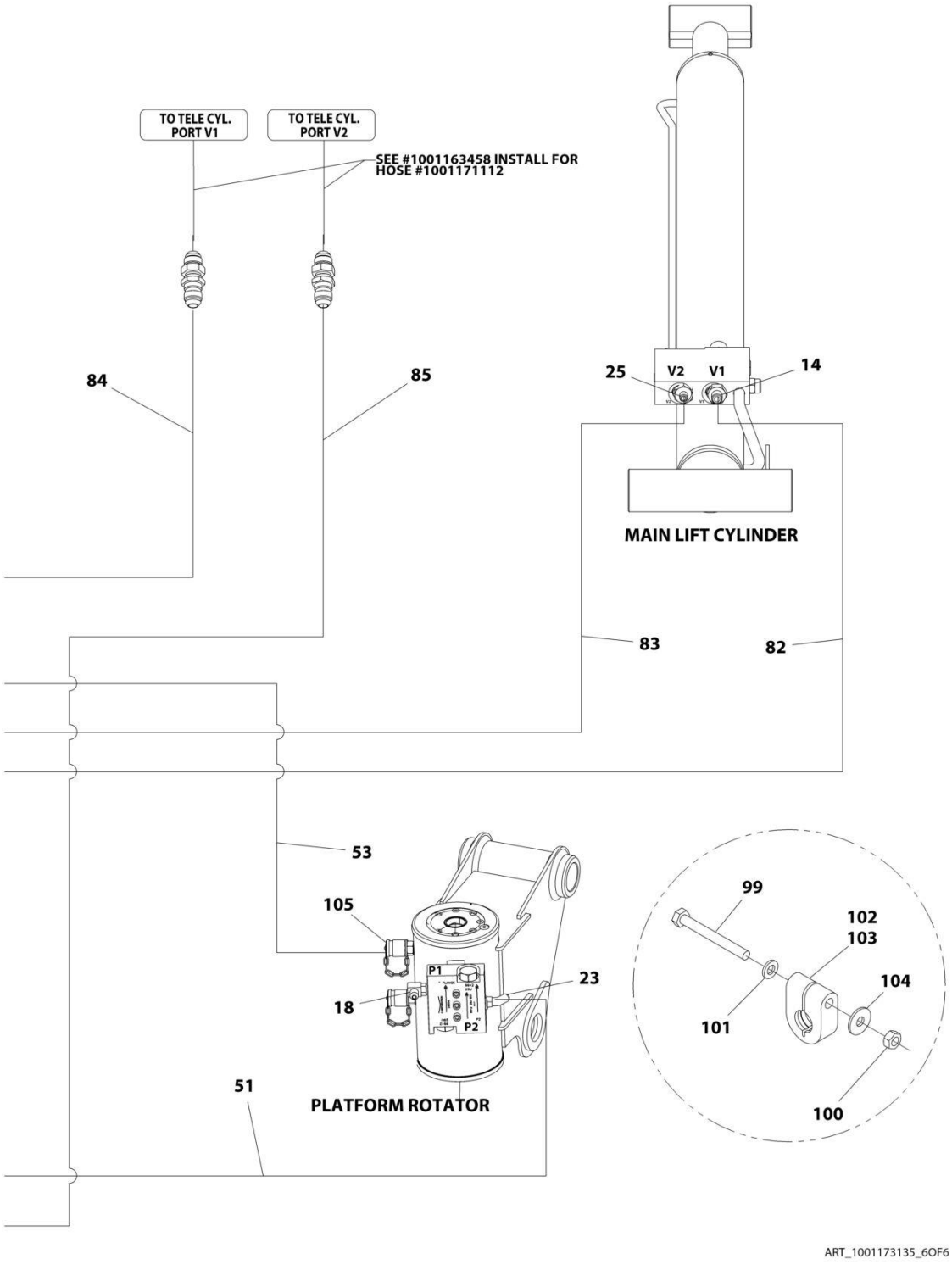
TO TELE CYL. PORT V1
TO TELE CYL. PORT V2
SEE #1001163458 INSTALL FOR HOSE #1001171112
84
85
25
V2
V1
14
MAIN LIFT CYLINDER
83
82
53
105
P1
23
18
P2
51
PLATFORM ROTATOR
99
102
103
104
101
100
ART_1001173135_6OF6

FIGURE 7-5. 400S 4WD HYDRAULIC SYSTEM INSTALLATION (ALL MACHINES) (SN 0300214506 through 0300220609)

ITEM	PART NUMBER	QTY	DESCRIPTION	REV
	1001173135	Ref	400S 4WD HYDRAULIC SYSTEM INSTALLATION	K
2	2110810	8	Fitting, Straight ORFS/ORB	
3	2110812	8	Fitting, Straight ORFS/ORB	
4	2111216	5	Fitting, Straight ORFS/ORB	
5	2151212	2	Fitting, 45 JIC/ORB	
6	2131216	1	Fitting, 90 ORFS/ORB	
8	2220365	1	Fitting, 45 JIC/ORB	
9	2220366	2	Fitting, 90 JIC/ORB	
10	2220371	12	Fitting, Straight JIC/ORB	
11	2220372	8	Fitting, Straight JIC/ORB	
12	2220373	3	Fitting, Straight JIC/ORB	
13	2220374	2	Fitting, Straight JIC/ORB	
14	2220375	2	Fitting, Straight JIC/ORB	
15	2220377	1	Fitting, Straight JIC/ORB	
16	2220415	2	Fitting, Straight JIC/ORB	
17	2220451	1	Fitting, Straight JIC/ORB	
18	2220466	3	Fitting, 90 JIC/ORB	
19	2220468	2	Fitting, Straight JIC/ORB	
20	2220473	8	Fitting, 90 JIC/ORB	
21	2220500	4	Fitting, 45 JIC/ORB	
22	2220501	2	Fitting, 45 JIC/ORB	
23	2220502	1	Fitting, 45 JIC/ORB	
25	2220577	1	Fitting, Straight JIC/ORB	
26	2220582	3	Fitting, Straight JIC/ORB	
27	2220596	2	Fitting, 90 JIC/ORB	
28	2220600	2	Fitting, Straight JIC/ORB	
29	1001197272	1	Fitting, Tee JIC/ORB/JIC	
31	2220622	1	Fitting, Straight JIC/FSJIC	
32	2220628	1	Fitting, 90 JIC/ORB	
34	2220695	1	Fitting, Tee JIC/ORB/JIC	
35	2220726	1	Fitting, 90 JIC/ORB	
36	2220775	1	Fitting, 90 JIC/ORB	
37	1001175024	1	Fitting, Tee JIC/JIC/ORB	
38	2220906	1	Fitting, 90 JIC/ORB	
39	2220923	2	Fitting, Straight JIC/ORB	
40	2220946	2	Fitting, Straight JIC/ORB	
41	2220947	2	Fitting, Straight JIC/ORB	
42	2220998	2	Fitting, Straight JIC/ORB	
44	4240018	20	Tie-Strap	
47	80633030	2	Clamp	
48	88662037	1	Fitting, Straight JIC/ORB	
49	1001098928	1	Clamp	
50	1001172692	2	Hose	
51	1001172694	1	Hose	
52	1001172695	2	Hose	
53	1001172696	1	Hose	
54	1001172697	4	Hose	
55	1001172698	2	Hose	
56	1001172699	2	Hose	

ITEM	PART NUMBER	QTY	DESCRIPTION	REV
57	1001197284	1	Hose	
60	1001172703	2	Hose	
64	1001172707	2	Hose	
69	1001172713	1	Hose	
70	1001172715	1	Hose	
71	1001172716	1	Hose	
72	1001172717	1	Hose	
73	1001172718	1	Hose	
74	1001172719	1	Hose	
75	1001172720	1	Hose	
76	1001172721	1	Hose	
77	1001172722	2	Hose	
78	1001172723	3	Hose	
79	1001173898	1	Hose	
80	1001173899	1	Hose	
81	1001173900	2	Hose	
82	1001173901	1	Hose	
83	1001173902	1	Hose	
84	1001173903	1	Hose	
85	1001173904	1	Hose	
86	1001173907	1	Hose	
87	1001173908	1	Hose	
88	1001173909	1	Hose	
89	1001173937	1	Hose	
90	1001173938	1	Hose	
91	1001181073	1	Hose	
92	1001181074	1	Hose	
93	1001181075	1	Hose	
94	1001184542	1	Hose	
95	1001184543	1	Hose	
96	1001184561	1	Hose	
97	1001184562	1	Hose	
98	1001184563	1	Hose	
99	0700619	2	Bolt, M6 x 55	
100	3290601	2	Nut, M6 x 1	
101	4811700	2	Washer, M6	
102	1001191275	1	Clamp	
103	1001191276	1	Clamp	
104	4811702	2	Washer, M6	
105	2221086	3	Fitting, Diagnostic Test Port	
106	2221040	2	Fitting, 45 JIC/ORB	

FIGURE 7-6. 400S 4WD HYDRAULIC SYSTEM INSTALLATION (ALL MACHINES) (SN 0300220610 through 0300272360, SN E300000100 through E300007988, SN 1300007289 through 1300007393)

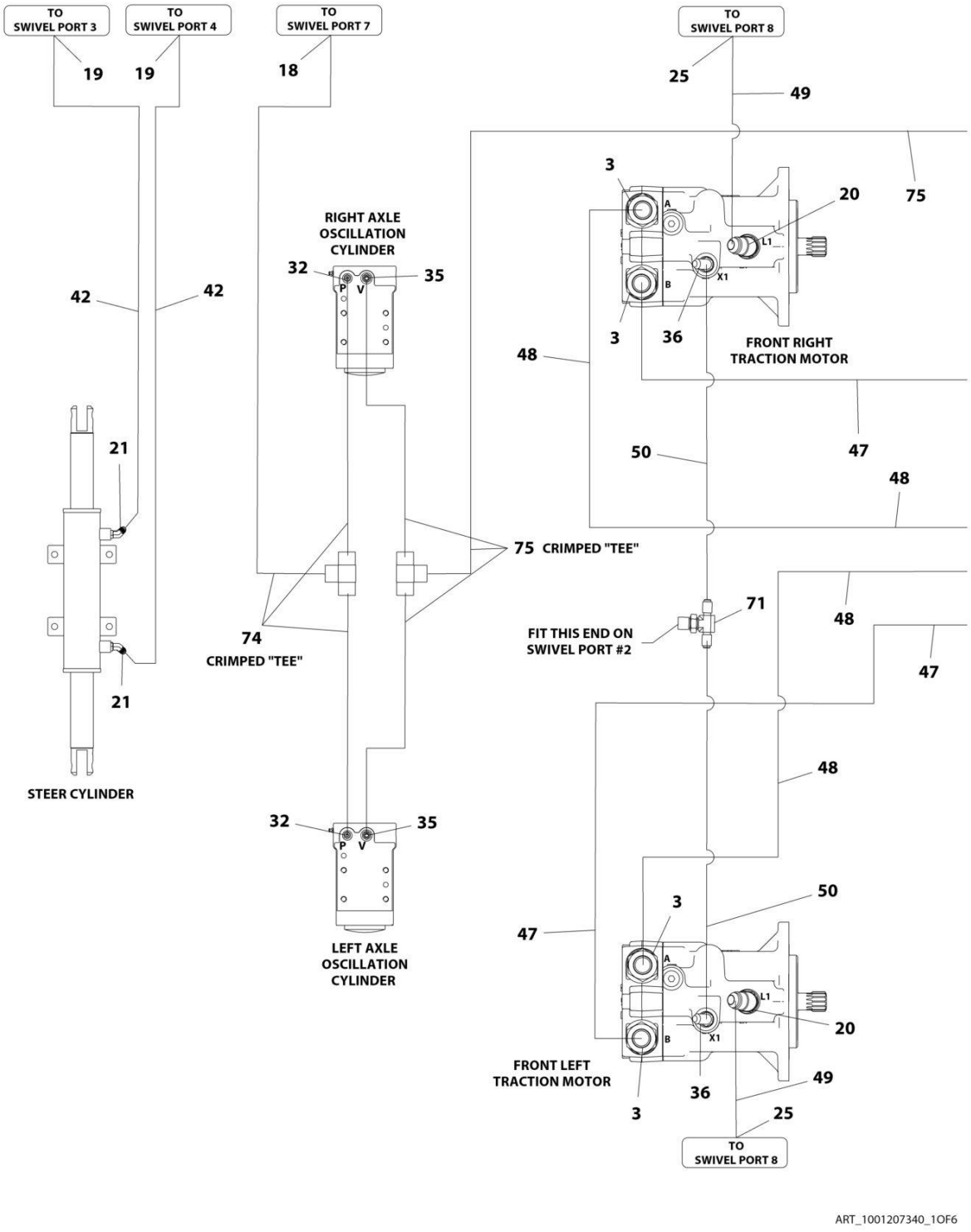

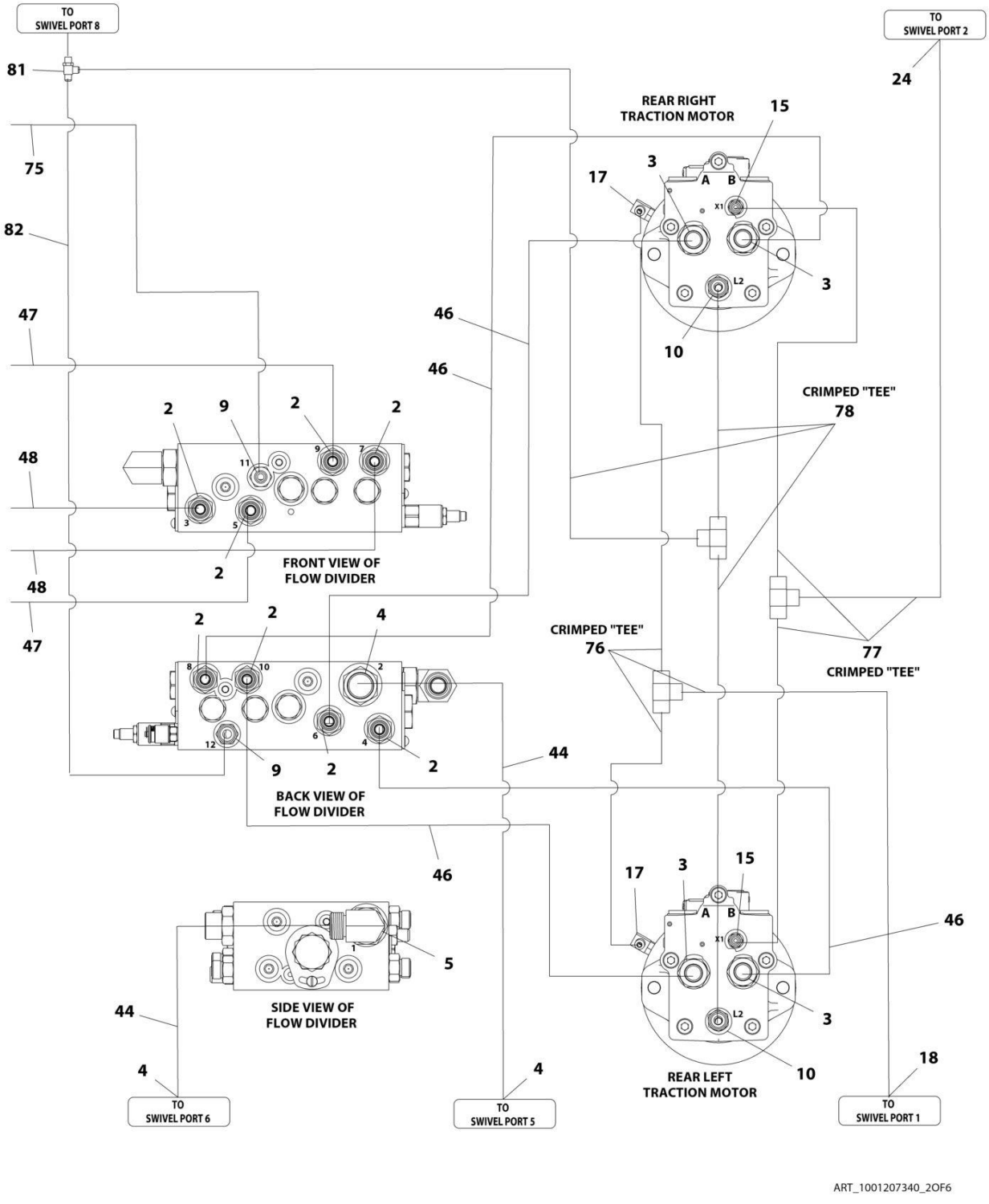

ART_1001207340_2OF6

SECTION 7 - HYDRAULIC

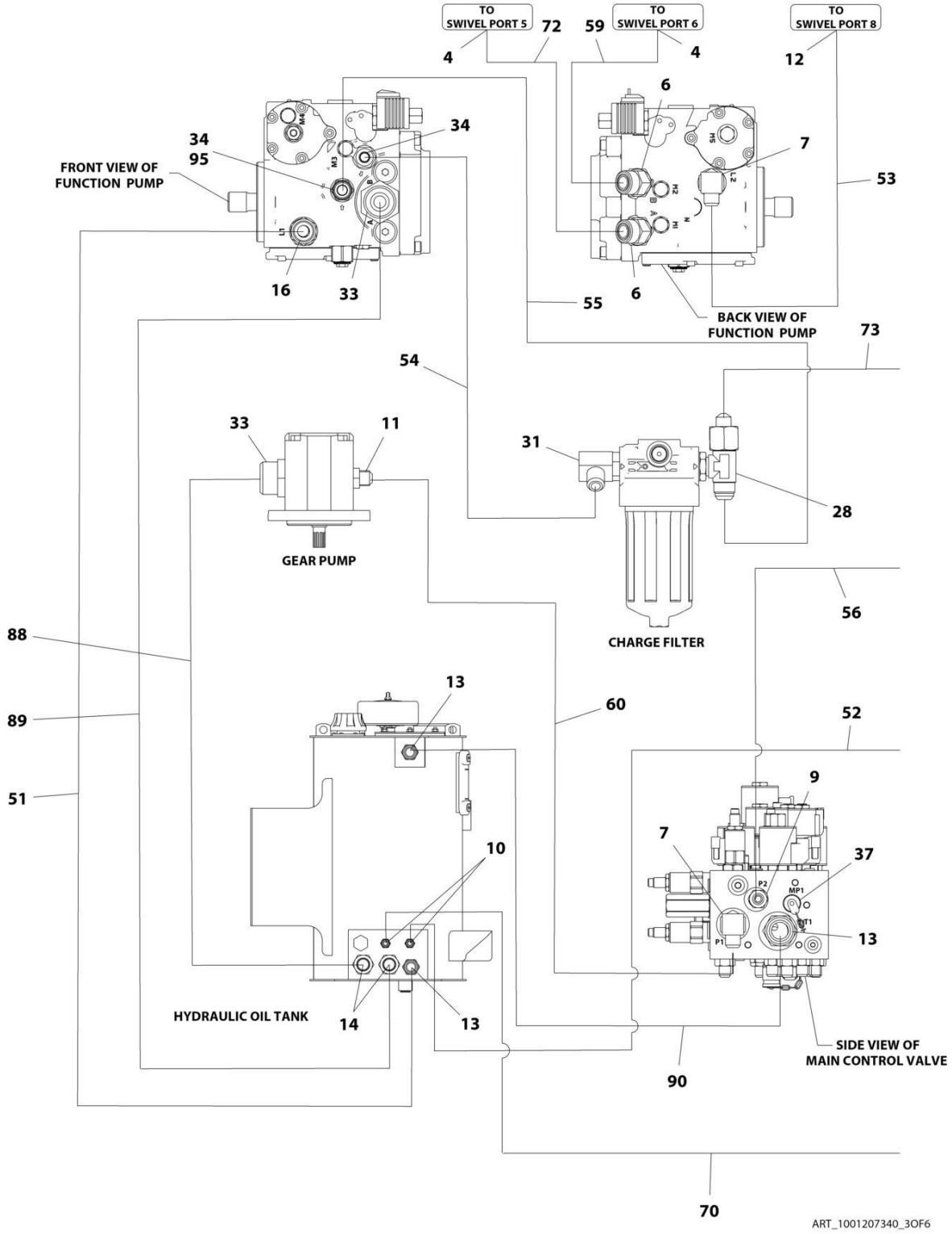

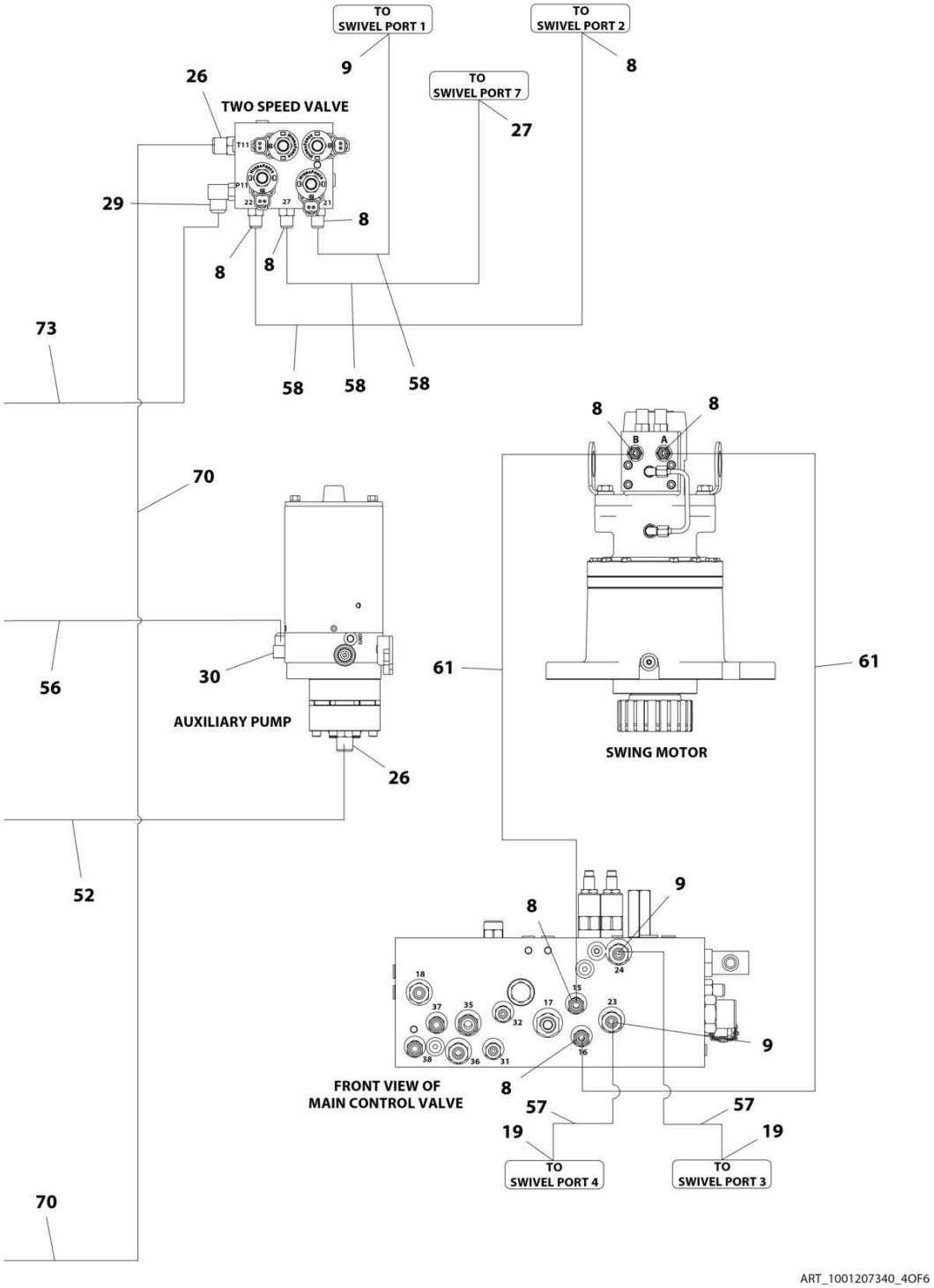
TO SWIVEL PORT 1
TO SWIVEL PORT 2
TO SWIVEL PORT 7
TWO SPEED VALVE
AUXILIARY PUMP
SWING MOTOR
FRONT VIEW OF MAIN CONTROL VALVE
TO SWIVEL PORT 4
TO SWIVEL PORT 3
ART_1001207340_4OF6

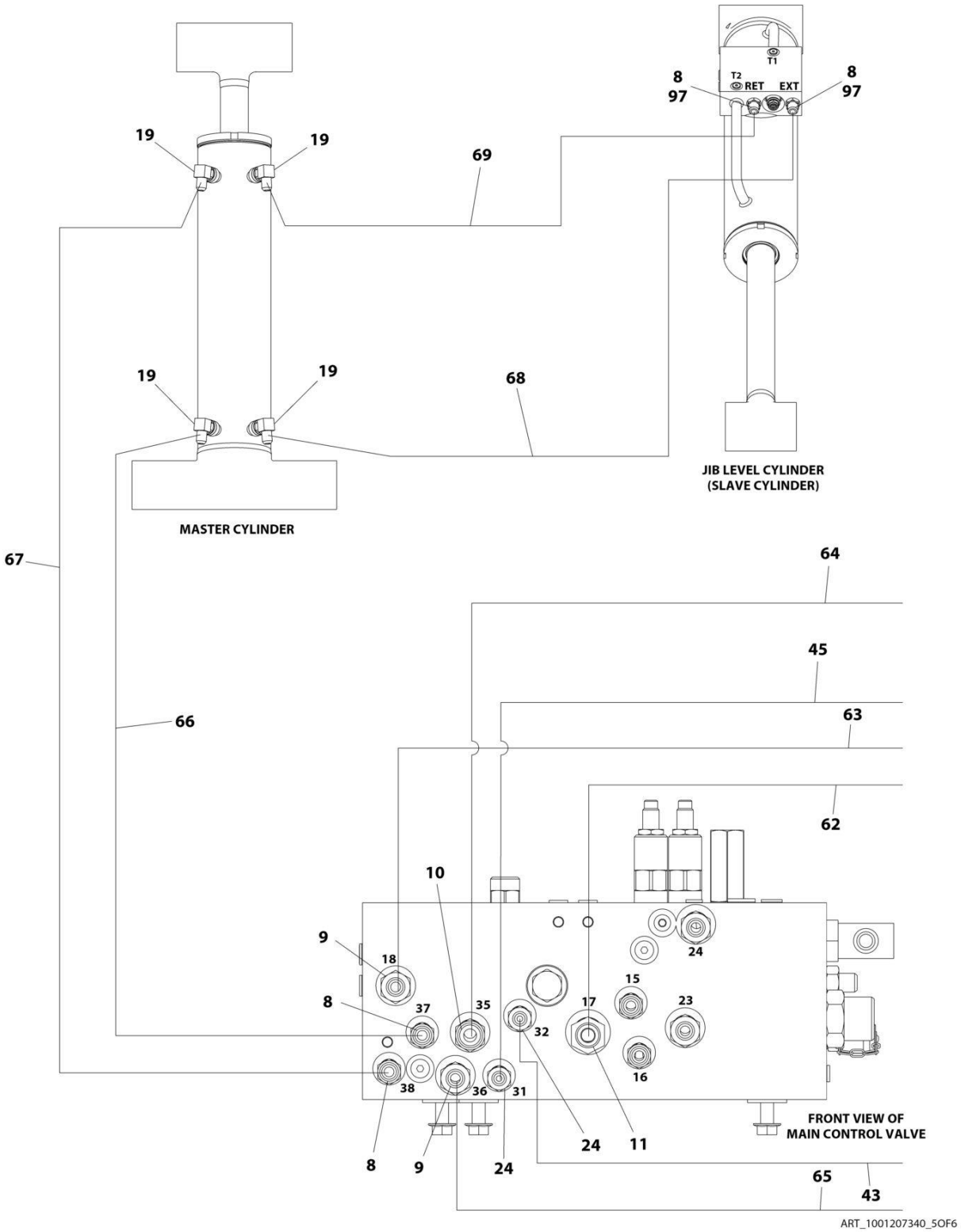
T1
T2
RET
EXT
8
97
8
97
19
19
69
19
19
68
JIB LEVEL CYLINDER
(SLAVE CYLINDER)
MASTER CYLINDER
67
64
45
66
63
62
10
9
18
8
37
35
32
17
15
23
24
16
38
36
31
8
9
24
24
11
FRONT VIEW OF
MAIN CONTROL VALVE
65
43
ART_1001207340_5OF6

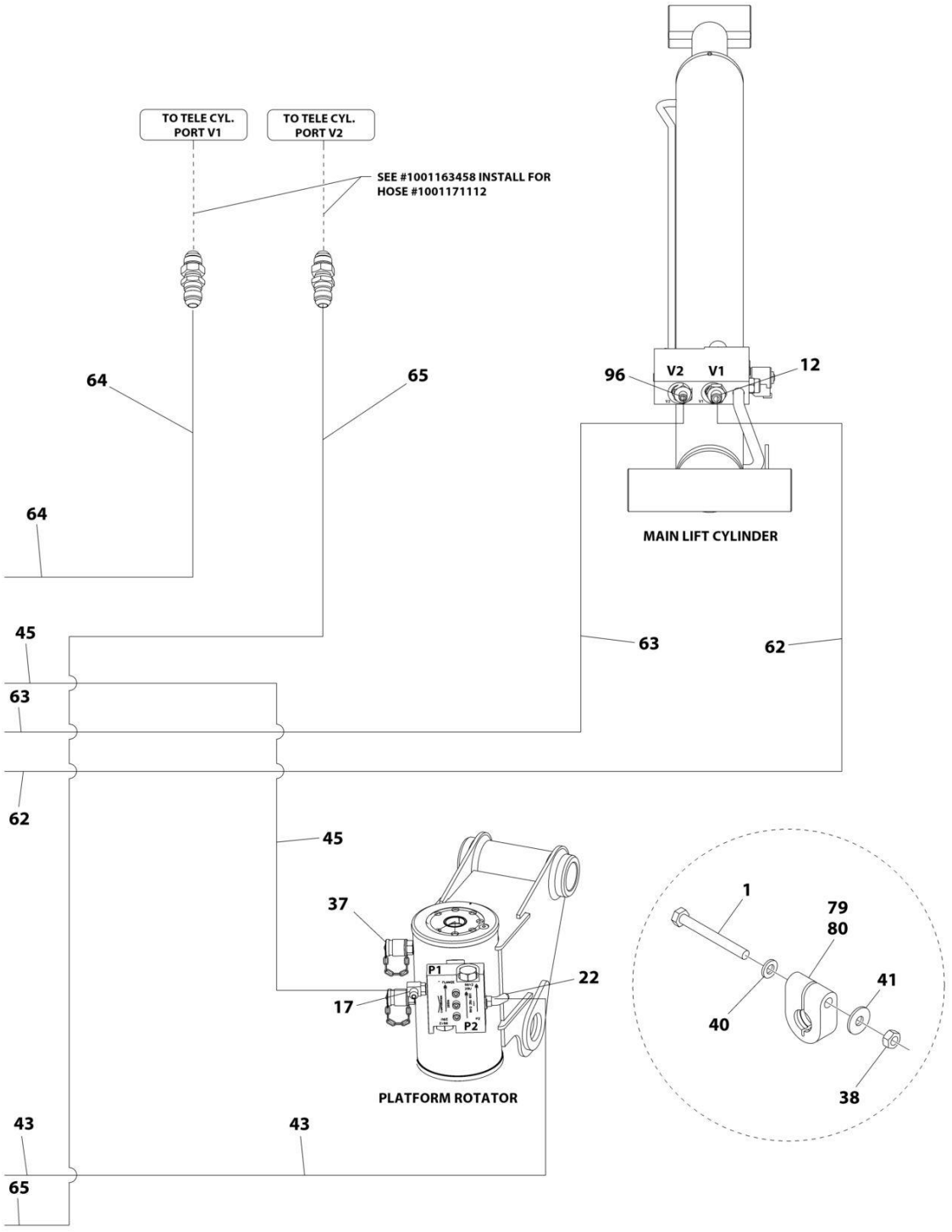
TO TELE CYL. PORT V1
TO TELE CYL. PORT V2
SEE #1001163458 INSTALL FOR HOSE #1001171112
64
65
64
96
V2
V1
12
MAIN LIFT CYLINDER
45
63
62
63
62
45
37
P1
22
17
P2
PLATFORM ROTATOR
1
79
80
41
40
38
43
43
65
ART_1001207340_6OF6

FIGURE 7-6. 400S 4WD HYDRAULIC SYSTEM INSTALLATION (ALL MACHINES) (SN 0300220610 through 0300272360, SN E300000100 through E300007988, SN 1300007289 through 1300007393)

ITEM	PART NUMBER	QTY	DESCRIPTION	REV
	1001207340	Ref	400S 4WD HYDRAULIC SYSTEM INSTALLATION - 400S (WITHOUT ARCTIC PACKAGE)	F
1	0700619	2	Bolt, M6 x 55	
2	2110810	8	Fitting, Straight ORFS/ORB	
3	2110812	8	Fitting, Straight ORFS/ORB	
4	2111216	5	Fitting, Straight ORFS/ORB	
5	2131216	1	Fitting, 90 ORFS/ORB	
6	2131212	2	Fitting, 90 ORFS/ORB	
7	2220366	2	Fitting, 90 JIC/ORB	
8	2220371	AR	Fitting, Straight JIC/ORB	
9	2220372	8	Fitting, Straight JIC/ORB	
10	2220373	5	Fitting, Straight JIC/ORB	
11	2220374	AR	Fitting, Straight JIC/ORB	
12	2220375	AR	Fitting, Straight JIC/ORB	
13	2220377	3	Fitting, Straight JIC/ORB	
14	1001202910	2	Fitting, Straight MORB	
15	2220415	2	Fitting, Straight JIC/ORB	
16	2220451	1	Fitting, Straight JIC/ORB	
17	2220466	3	Fitting, 90 JIC/ORB	
18	2220468	2	Fitting, Straight JIC/ORB	
19	2220473	8	Fitting, 90 JIC/ORB	
20	2220500	2	Fitting, 45 JIC/ORB	
21	2220501	2	Fitting, 45 JIC/ORB	
22	2220502	1	Fitting, 45 JIC/ORB	
23	2220577	1	Fitting, Straight JIC/ORB (Not Shown) **(SN 0300220610 through 0300226846)**	
24	2220582	3	Fitting, Straight JIC/ORB	
25	2220596	2	Fitting, 90 JIC/ORB	
26	2220600	2	Fitting, Straight JIC/ORB	
27	2220628	1	Fitting, 90 JIC/ORB	
28	2220695	1	Fitting, Tee JIC/ORB/JIC	
29	2220726	1	Fitting, 90 JIC/ORB	
30	2220775	1	Fitting, 90 JIC/ORB	
31	2220906	1	Fitting, 90 JIC/ORB	
32	2220923	2	Fitting, Straight JIC/ORB	
33	2220946	2	Fitting, Straight JIC/ORB	
34	2220947	AR	Fitting, Straight JIC/ORB	
35	2220998	2	Fitting, Straight JIC/ORB	
36	2221040	2	Fitting, 45 JIC/ORB	
37	2221086	3	Fitting, Diagnostic Test Port	
38	3290601	2	Nut, M6 x 1	
39	4240018	20	Tie-Strap (Not Shown)	
40	4811700	2	Washer, M6	
41	4811702	2	Washer, M6	
42	1001172692	2	Hose	
43	1001172694	1	Hose	
44	1001172695	2	Hose	
45	1001172696	1	Hose	
46	1001172697	4	Hose	

ITEM	PART NUMBER	QTY	DESCRIPTION	REV
47	1001172698	2	Hose	
48	1001172699	2	Hose	
49	1001172703	2	Hose	
50	1001172707	2	Hose	
51	1001216655	1	Hose	
52	1001172716	1	Hose	
53	1001172717	1	Hose	
54	1001172718	1	Hose	
55	1001172719	1	Hose	
56	1001172721	1	Hose	
57	1001172722	2	Hose	
58	1001172723	3	Hose	
59	1001173898	1	Hose	
60	1001173899	1	Hose **(SN 0300220610 through 0300222808)**	
60	2752500	1	Hose **(SN 0300222809 through 0300272360, SN E300000100 through E300007988, SN 1300007289 through 300007393, Except SN 0300272174 through 0300272184, Excluding E300007847)**	
61	1001173900	2	Hose	
62	1001173901	1	Hose	
63	1001173902	1	Hose	
64	1001173903	1	Hose	
65	1001173904	1	Hose	
66	1001173907	1	Hose	
67	1001173908	1	Hose	
68	1001173909	1	Hose	
69	1001173937	1	Hose	
70	1001193654	1	Hose	
71	1001175024	1	Fitting, Tee JIC/JIC/ORB	
72	1001181074	1	Hose	
73	1001181075	1	Hose	
74	1001184542	1	Hose	
75	1001184543	1	Hose	
76	1001184561	1	Hose	
77	1001184562	1	Hose	
78	1001184563	1	Hose	
79	1001191275	1	Clamp	
80	1001191276	1	Clamp	
81	1001197272	1	Fitting, Tee JIC/ORB/JIC	
82	1001197284	1	Hose	
88	1001207331	1	Hose **(SN 0300220610 through 0300222808)**	
88	1001172713	1	Hose **(SN 0300222809 through 0300226923)**	
88	1001207332	1	Hose **(SN 0300226924 through 0300272360, SN E300000100 through E300007988, SN 1300007289 through 300007393, Except SN 0300272174 through 0300272184, Excluding E300007847)**	
89	1001207332	1	Hose	
90	1001207333	1	Hose	
94	80633030	2	Clamp, Hose (Not Shown)	
95	88662037	AR	Fitting, Straight JIC/ORB **(SN 0300222809 through 0300272360, SN E300000100 through E300007988, SN 1300007289 through 300007393, Except SN 0300272174 through 0300272184, Excluding E300007847)**	

ITEM	PART NUMBER	QTY	DESCRIPTION	REV
96	2220497	AR	Fitting, Straight JIC/ORB **(SN 0300226847 through 0300272360, SN E300000100 through E300007988, SN 1300007289 through 300007393, Except SN 0300272174 through 0300272184, Excluding E300007847)**	
97	2220603	AR	Fitting, Straight JIC/ORB **(SN 0300247698 through 0300272360, Except SN 0300272174 through 0300272184)**	

FIGURE 7-7. 460SJ 2WD HYDRAULIC SYSTEM INSTALLATION (SN 0300203771 through 0300220609)

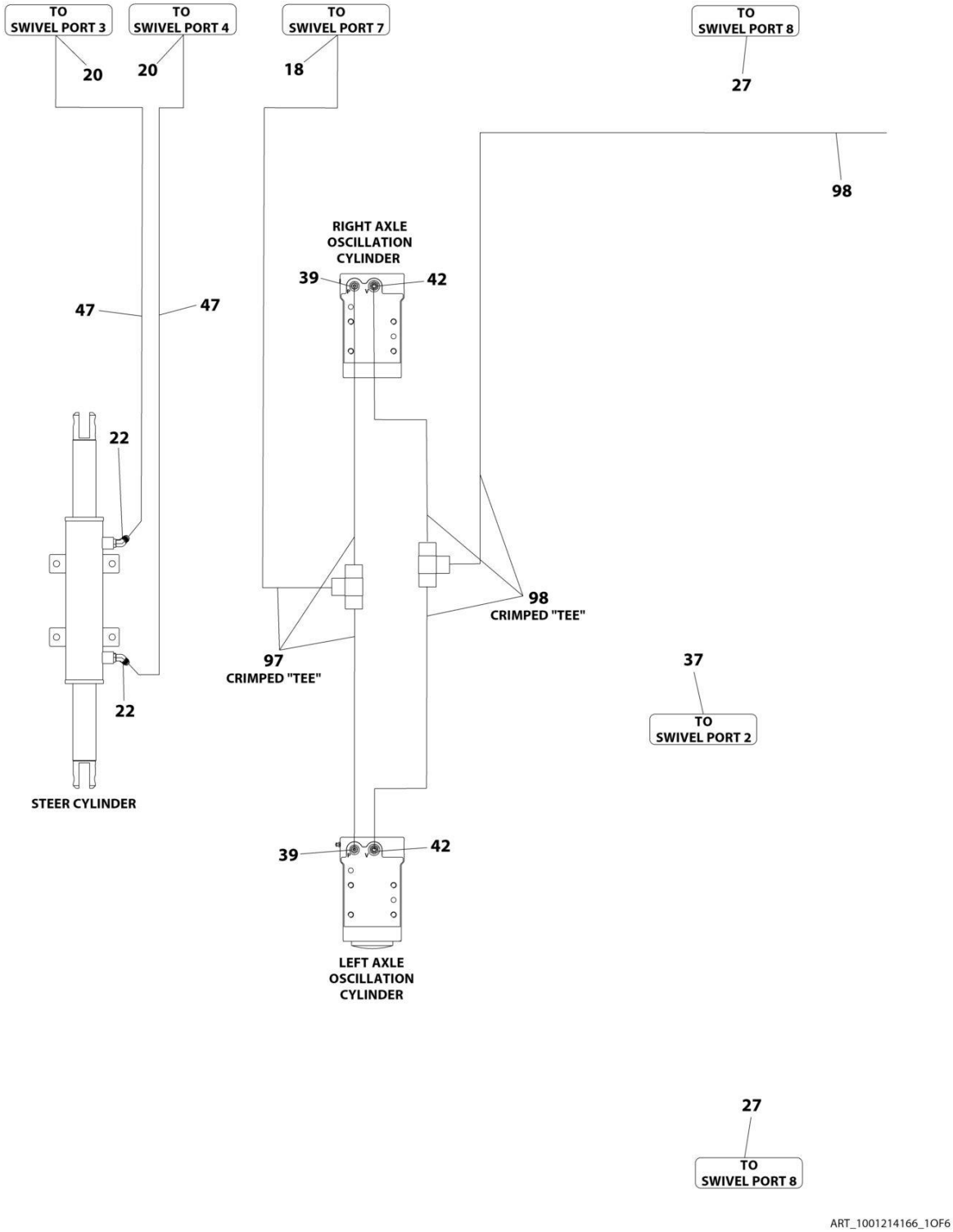

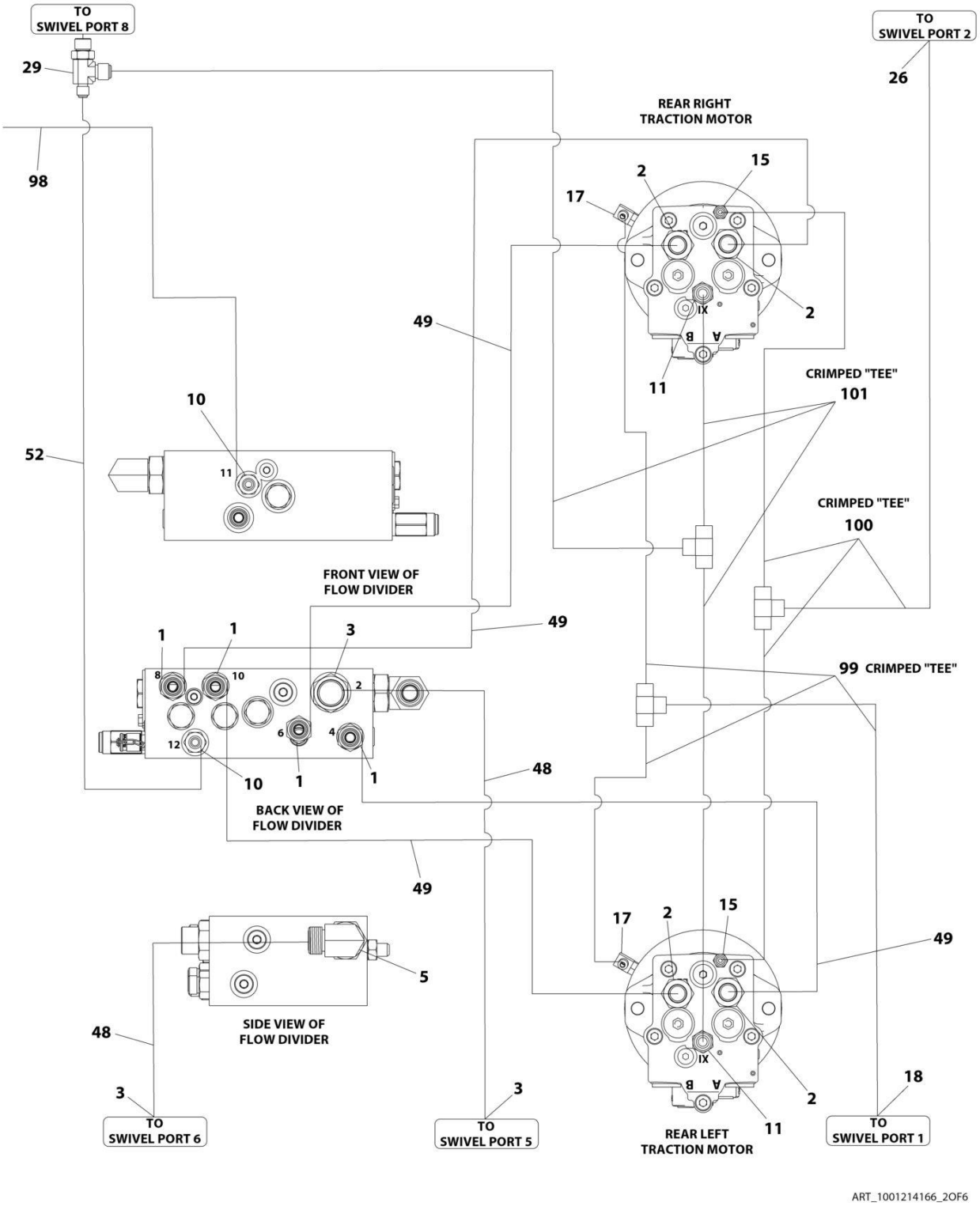
TO SWIVEL PORT 8
29
98
TO SWIVEL PORT 2
26
REAR RIGHT TRACTION MOTOR
2
15
17
IX
B
A
2
11
49
CRIMPED "TEE"
101
10
52
11
CRIMPED "TEE"
100
FRONT VIEW OF FLOW DIVIDER
49
1
1
3
8
10
2
6
4
12
10
1
1
99 CRIMPED "TEE"
48
BACK VIEW OF FLOW DIVIDER
49
5
SIDE VIEW OF FLOW DIVIDER
48
3
TO SWIVEL PORT 6
3
TO SWIVEL PORT 5
17
2
15
49
IX
B
A
2
11
REAR LEFT TRACTION MOTOR
18
TO SWIVEL PORT 1
ART_1001214166_2OF6

SECTION 7 - HYDRAULIC

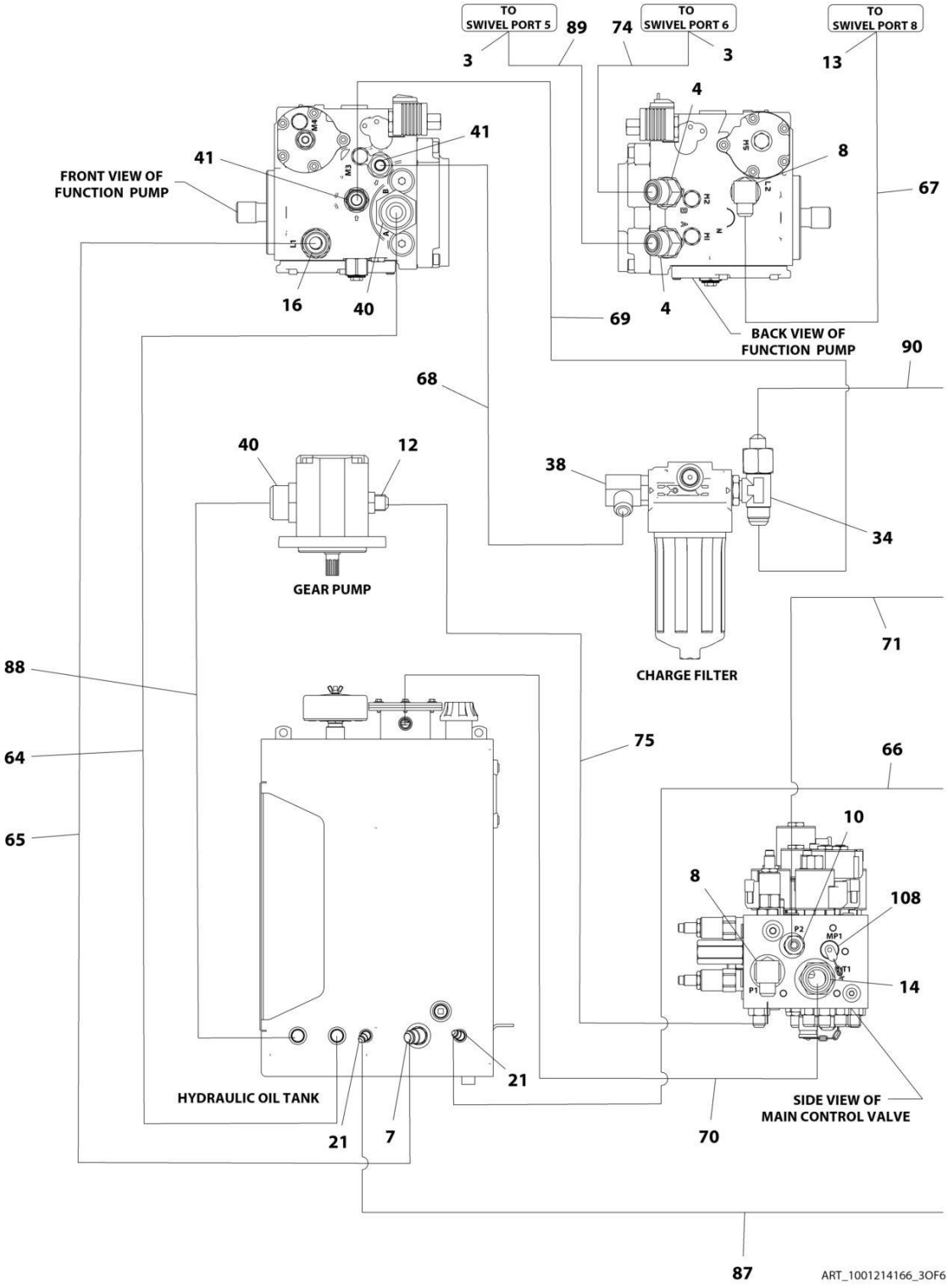

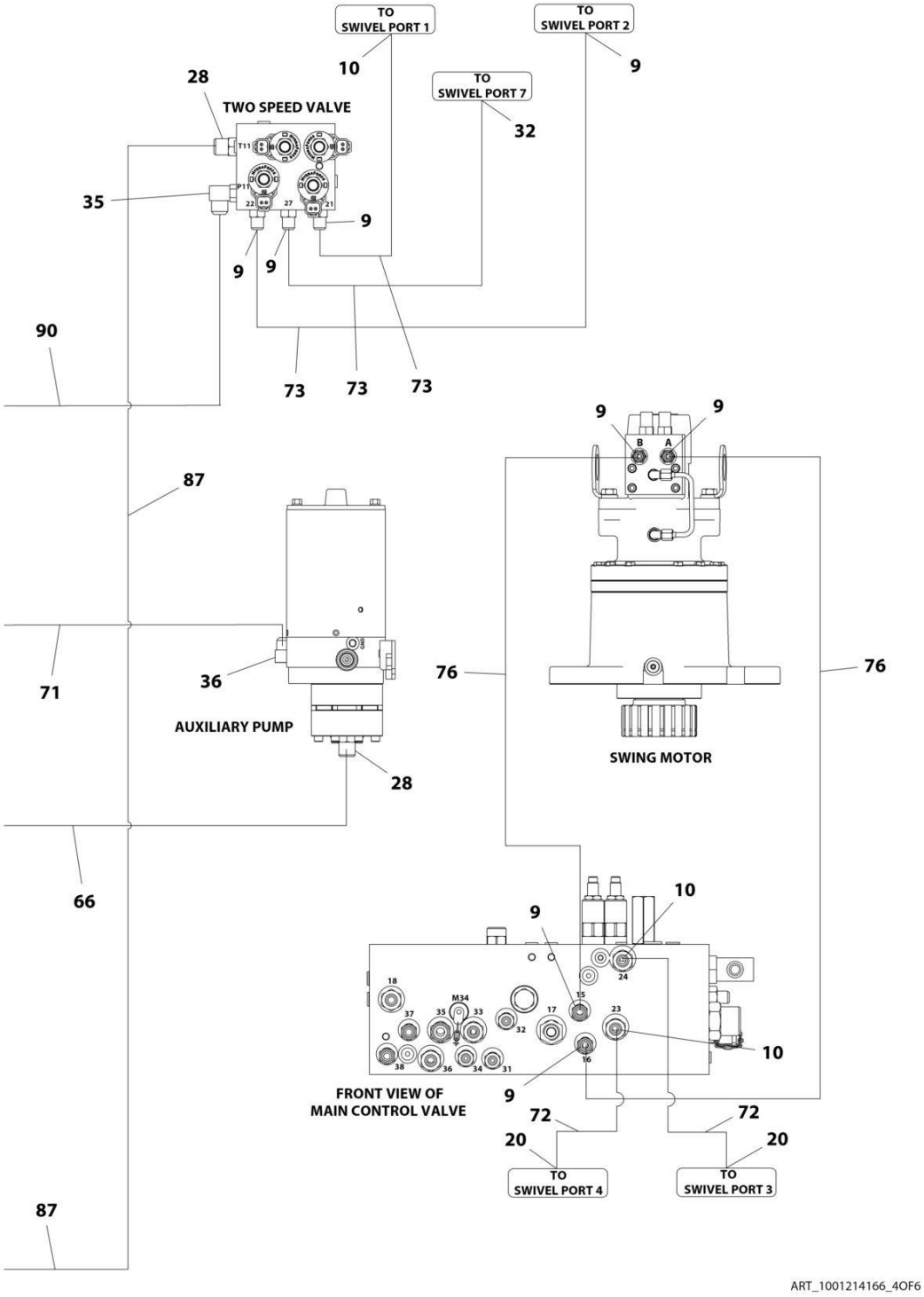
TO SWIVEL PORT 1
TO SWIVEL PORT 2
10
9
28
TWO SPEED VALVE
TO SWIVEL PORT 7
32
35
9
9
9
90
73
73
73
9
9
B
A
87
71
36
AUXILIARY PUMP
28
76
76
SWING MOTOR
66
10
9
10
FRONT VIEW OF MAIN CONTROL VALVE
9
72
72
20
20
TO SWIVEL PORT 4
TO SWIVEL PORT 3
87
ART_1001214166_4OF6

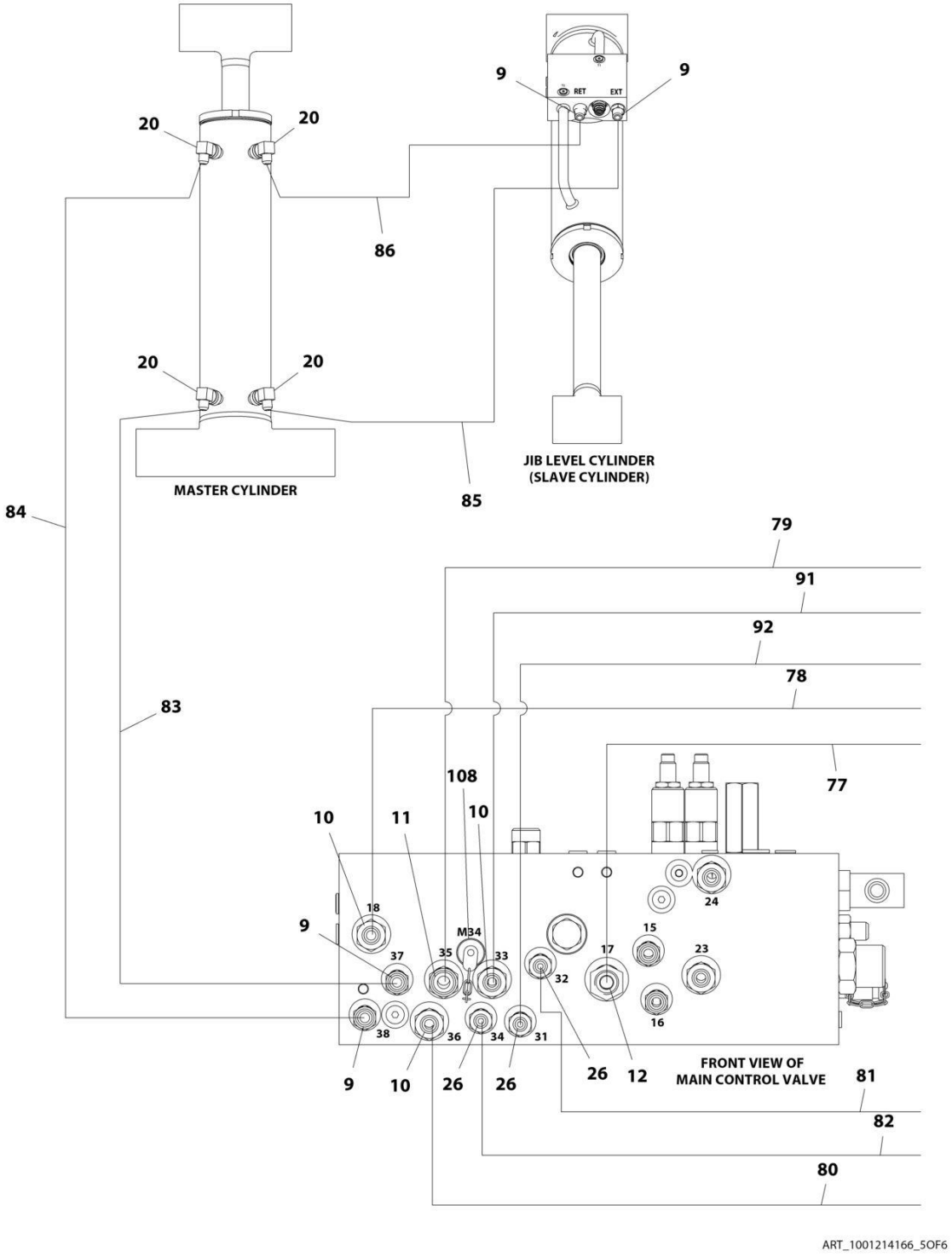
9
9
RET
EXT
20
20
86
20
20
MASTER CYLINDER
85
JIB LEVEL CYLINDER
(SLAVE CYLINDER)
84
79
91
92
78
83
77
108
10
10
11
18
9
M34
37
35
33
32
17
15
23
24
16
38
36
34
31
9
10
26
26
26
12
FRONT VIEW OF
MAIN CONTROL VALVE
81
82
80
ART_1001214166_5OF6

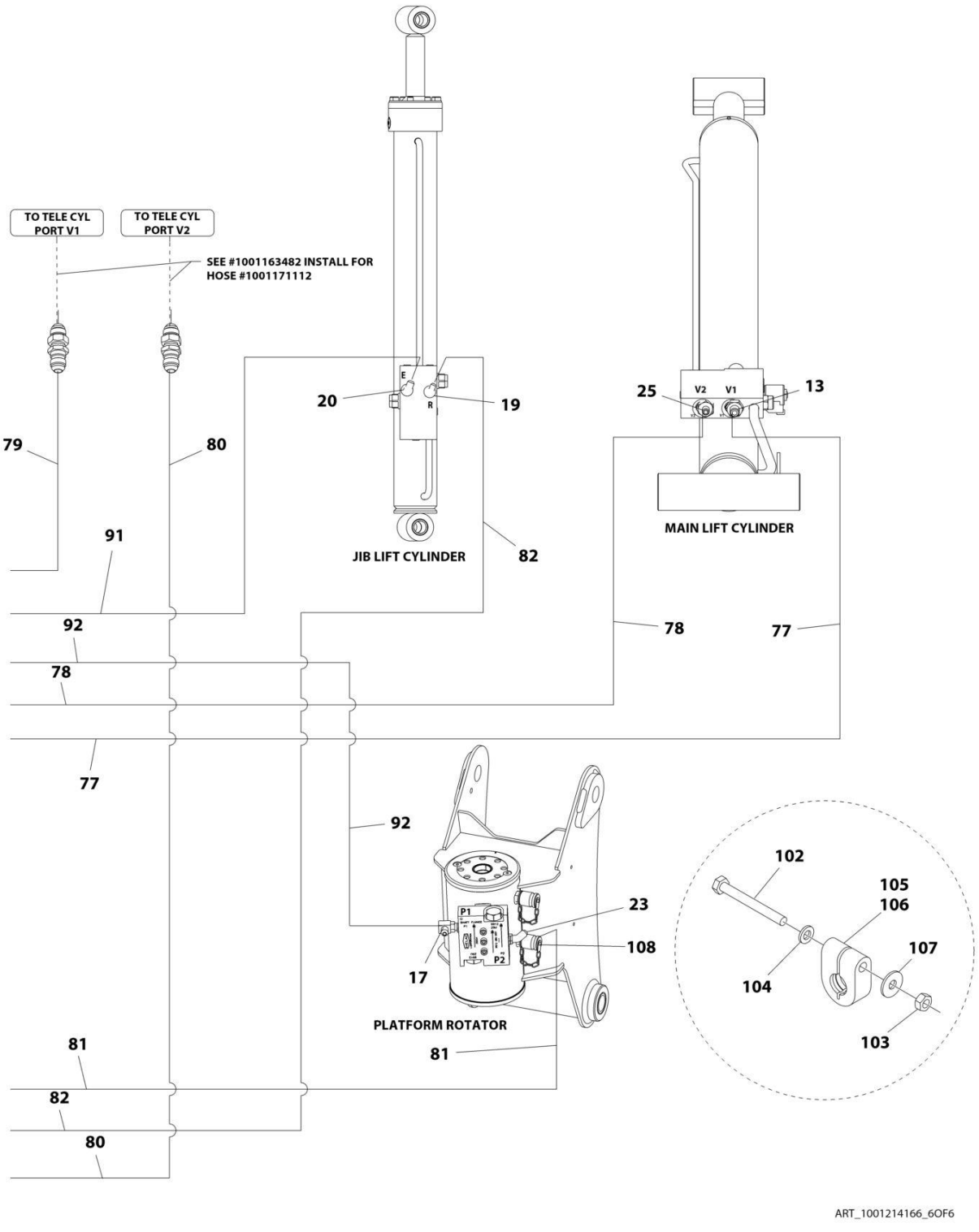
TO TELE CYL PORT V1
TO TELE CYL PORT V2
SEE #1001163482 INSTALL FOR HOSE #1001171112
79
80
91
92
78
77
20
19
E
R
JIB LIFT CYLINDER
82
25
V2
V1
13
MAIN LIFT CYLINDER
78
77
92
23
108
17
P1
P2
PLATFORM ROTATOR
81
81
82
80
102
105
106
107
104
103
ART_1001214166_6OF6

FIGURE 7-7. 460SJ 2WD HYDRAULIC SYSTEM INSTALLATION (SN 0300203771 through 0300220609)

ITEM	PART NUMBER	QTY	DESCRIPTION	REV
	1001214166	Ref	460SJ 2WD HYDRAULIC SYSTEM INSTALLATION	B
1	2110810	4	Fitting, Straight ORFS/ORB	
2	2110812	4	Fitting, Straight ORFS/ORB	
3	2111216	5	Fitting, Straight ORFS/ORB	
4	2151212	2	Fitting, 45 ORFS/ORB	
5	2131216	1	Fitting, 45 ORFS/ORB	
7	2220365	1	Fitting, 45 JIC/ORB	
8	2220366	2	Fitting, 90 JIC/ORB	
9	2220371	12	Fitting, Straight JIC/ORB	
10	2220372	9	Fitting, Straight JIC/ORB	
11	2220373	3	Fitting, Straight JIC/ORB	
12	2220374	2	Fitting, Straight JIC/ORB	
13	2220375	2	Fitting, Straight JIC/ORB	
14	2220377	1	Fitting, Straight JIC/ORB	
15	2220415	2	Fitting, Straight JIC/ORB	
16	2220451	1	Fitting, Straight JIC/ORB	
17	2220466	3	Fitting, 90 JIC/ORB	
18	2220468	2	Fitting, Straight JIC/ORB	
19	2220472	1	Fitting, 90 JIC/ORB	
20	2220473	9	Fitting, 90 JIC/ORB	
21	2220500	2	Fitting, 45 JIC/ORB	
22	2220501	1	Fitting, 45 JIC/ORB	
23	2220502	1	Fitting, 45 JIC/ORB	
25	2220577	1	Fitting, Straight JIC/ORB	
26	2220582	4	Fitting, Straight JIC/ORB	
27	2220238	2	Plug	
28	2220600	2	Fitting, Straight JIC/ORB	
29	1001197272	1	Fitting, Tee JIC/ORB/JIC	
32	2220628	1	Fitting, 90 JIC/ORB	
34	2220695	1	Fitting, Tee JIC/ORB/JIC	
35	2220726	1	Fitting, 90 JIC/ORB	
36	2220775	1	Fitting, 90 JIC/ORB	
37	2220237	1	Plug	
38	2220906	1	Fitting, 90 JIC/ORB	
39	2220923	2	Fitting, Straight JIC/ORB	
40	2220946	2	Fitting, Straight JIC/ORB	
41	2220947	2	Fitting, Straight JIC/ORB	
42	2220998	2	Fitting, Straight JIC/ORB	
43	4240018	15	Tie-Strap (Not Shown)	
44	80633030	2	Clamp (Not Shown)	
46	1001098928	1	Clamp (Not Shown)	
47	1001172692	2	Hose	
48	1001172695	2	Hose	
49	1001172697	4	Hose	
52	1001197284	1	Hose	
64	1001172713	1	Hose	
65	1001172715	1	Hose	
66	1001172716	1	Hose	
67	1001172717	1	Hose	
68	1001172718	1	Hose	

ITEM	PART NUMBER	QTY	DESCRIPTION	REV
69	1001172719	1	Hose	
70	1001172720	1	Hose	
71	1001172721	1	Hose	
72	1001172722	2	Hose	
73	1001172723	3	Hose	
74	1001173898	1	Hose	
75	1001173899	1	Hose	
76	1001173900	2	Hose	
77	1001173901	1	Hose	
78	1001173902	1	Hose	
79	1001173903	1	Hose	
80	1001173904	1	Hose	
81	1001173905	1	Hose	
82	1001173906	1	Hose	
83	1001173907	1	Hose	
84	1001173908	1	Hose	
85	1001173909	1	Hose	
86	1001173937	1	Hose	
87	1001173938	1	Hose	
88	1001181073	1	Hose	
89	1001181074	1	Hose	
90	1001181075	1	Hose	
91	1001181076	1	Hose	
92	1001181077	1	Hose	
97	1001184542	1	Hose	
98	1001184543	1	Hose	
99	1001184561	1	Hose	
100	1001184562	1	Hose	
101	1001184563	1	Hose	
102	0700619	2	Bolt, M6 x 55	
103	3290601	2	Nut, M6 x 1	
104	4811700	2	Washer, M6	
105	1001191275	1	Clamp	
106	1001191276	1	Clamp	
107	4811702	2	Washer, M6	
108	2221086	4	Fitting, Diagnostic Test Port	

FIGURE 7-8. 460SJ 2WD HYDRAULIC SYSTEM INSTALLATION (SN 0300220610 through 0300272360)

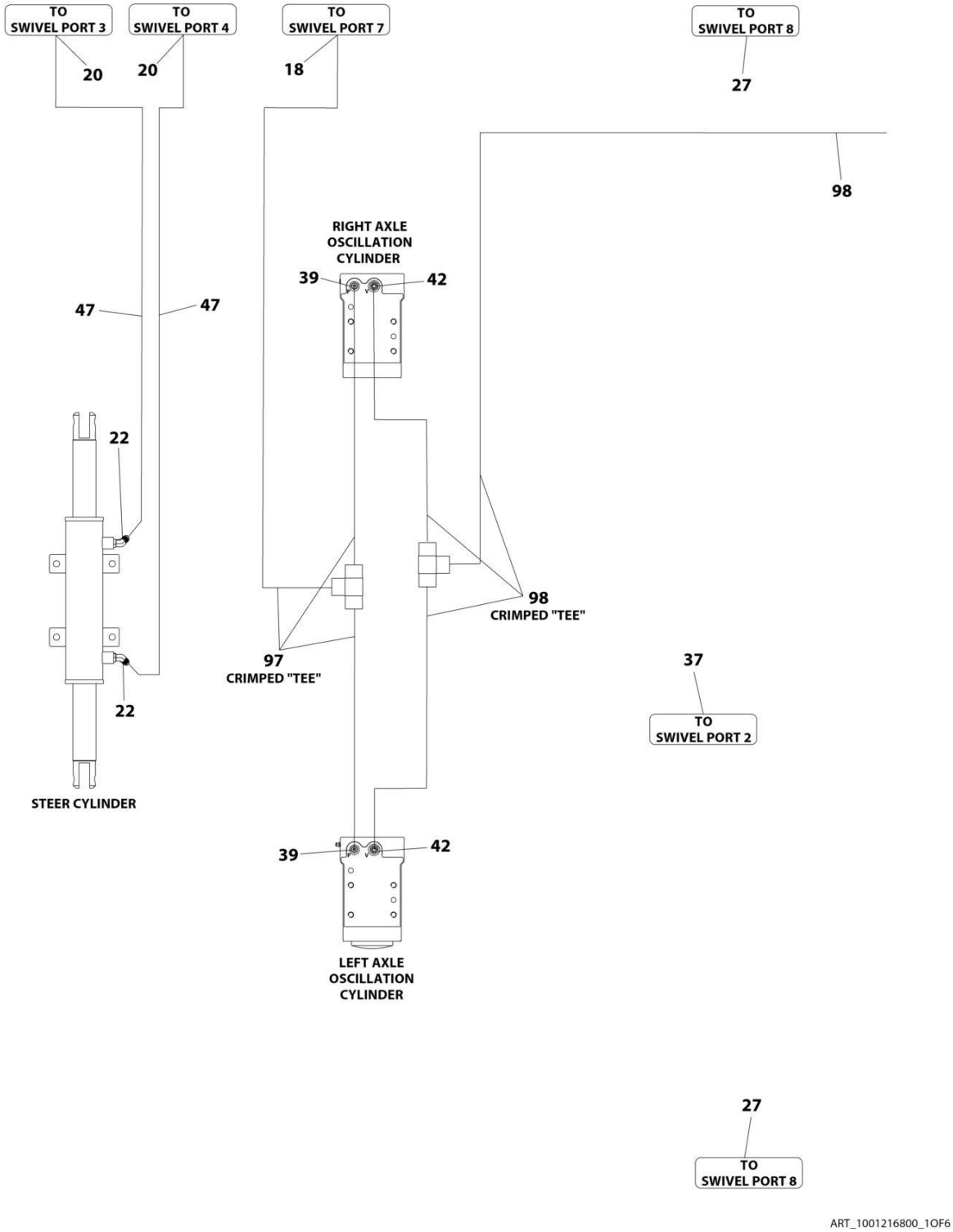

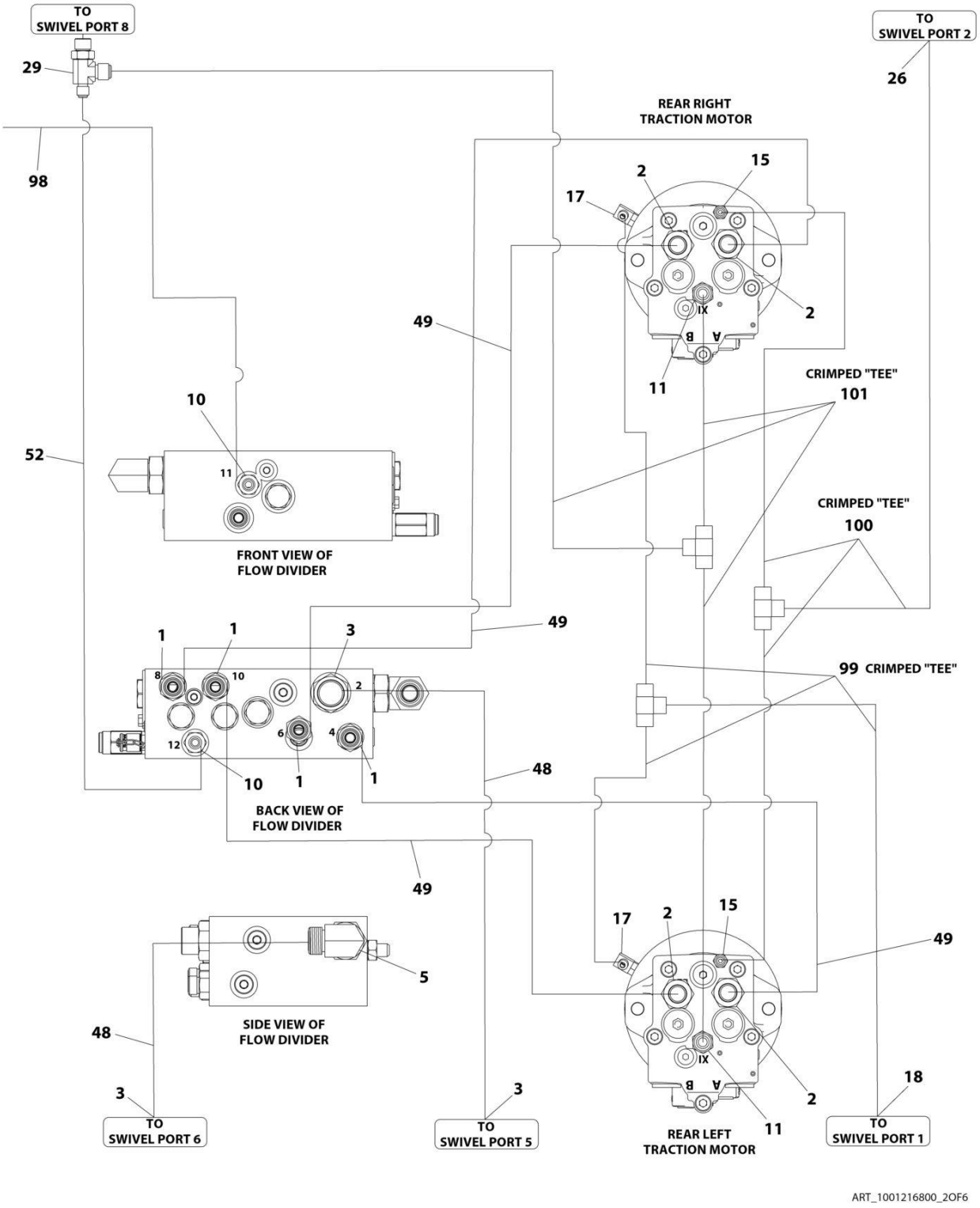
TO SWIVEL PORT 8
29
98
TO SWIVEL PORT 2
26
REAR RIGHT TRACTION MOTOR
2
15
17
IX
B
A
2
11
49
CRIMPED "TEE"
101
10
52
11
FRONT VIEW OF FLOW DIVIDER
CRIMPED "TEE"
100
49
1
1
3
8
10
2
6
4
12
10
1
1
99 CRIMPED "TEE"
48
BACK VIEW OF FLOW DIVIDER
49
5
SIDE VIEW OF FLOW DIVIDER
48
3
TO SWIVEL PORT 6
3
TO SWIVEL PORT 5
17
2
15
49
IX
B
A
2
11
18
TO SWIVEL PORT 1
REAR LEFT TRACTION MOTOR
ART_1001216800_2OF6

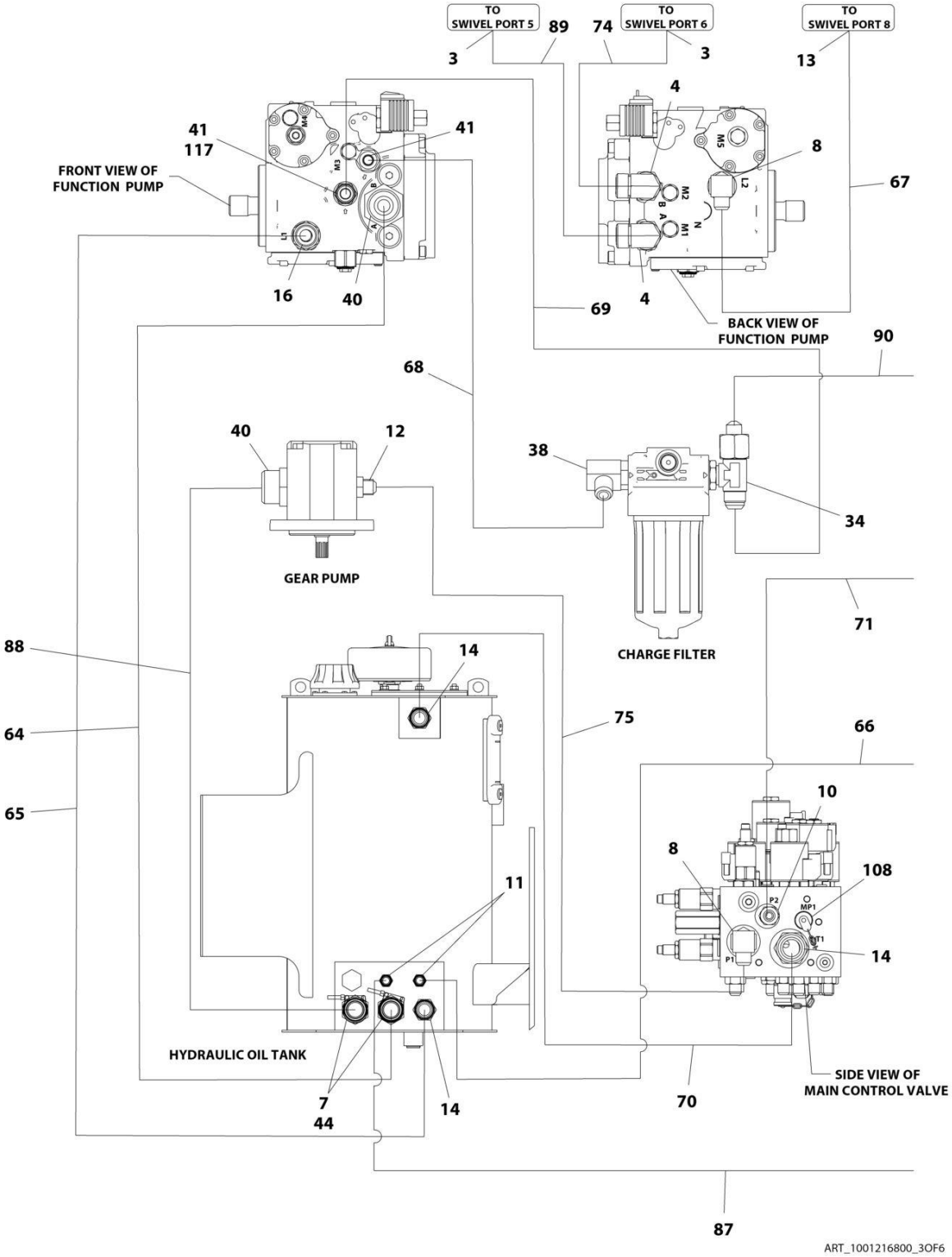
TO SWIVEL PORT 5
TO SWIVEL PORT 6
TO SWIVEL PORT 8
3
89
74
3
13
4
41
117
41
8
FRONT VIEW OF FUNCTION PUMP
67
16
40
69
4
BACK VIEW OF FUNCTION PUMP
90
68
40
12
38
34
GEAR PUMP
CHARGE FILTER
71
88
14
75
66
64
10
65
8
108
11
P2
MP1
MT1
P1
14
HYDRAULIC OIL TANK
7
44
14
70
SIDE VIEW OF MAIN CONTROL VALVE
87
ART_1001216800_3OF6

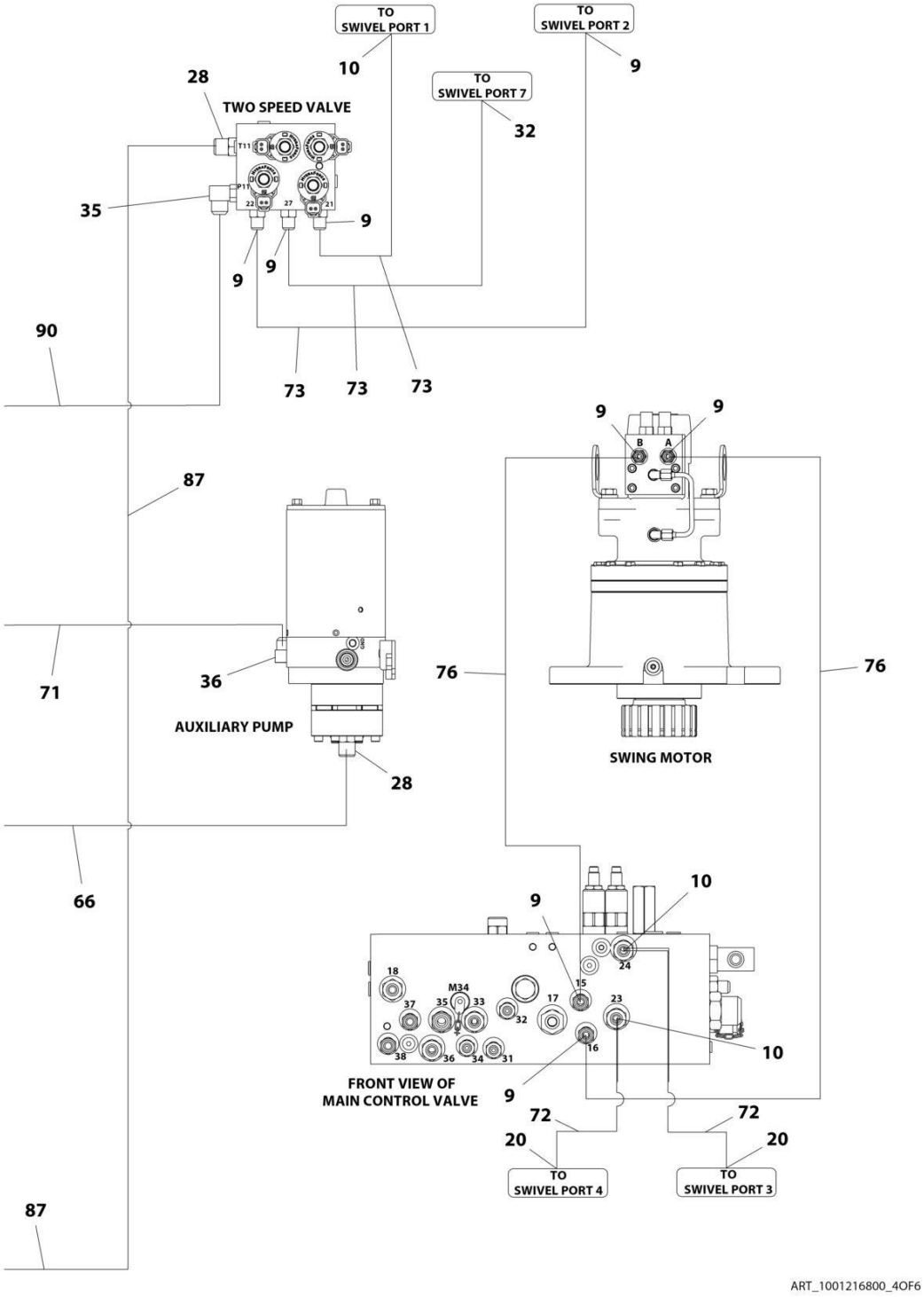
TO SWIVEL PORT 1
TO SWIVEL PORT 2
10
9
28
TWO SPEED VALVE
TO SWIVEL PORT 7
32
35
9
9
9
90
73
73
73
9
9
B
A
87
71
36
AUXILIARY PUMP
28
76
76
SWING MOTOR
66
10
9
18
M34
37
35
33
32
17
15
23
24
38
36
34
31
16
10
FRONT VIEW OF MAIN CONTROL VALVE
9
72
72
20
20
TO SWIVEL PORT 4
TO SWIVEL PORT 3
87
ART_1001216800_4OF6

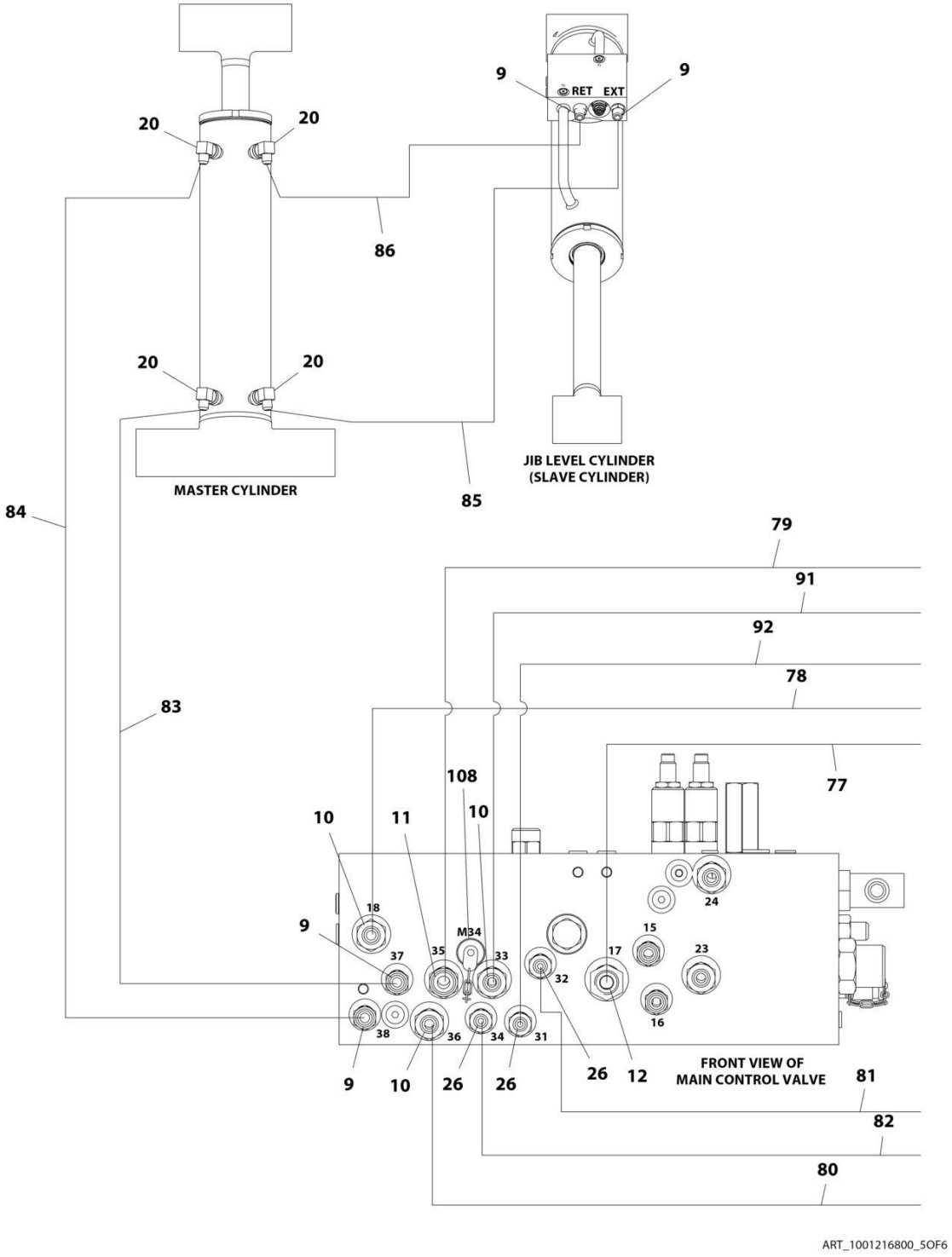
9
9
RET
EXT
20
20
86
20
20
MASTER CYLINDER
85
JIB LEVEL CYLINDER
(SLAVE CYLINDER)
84
79
91
92
78
83
77
108
10
11
10
18
9
M34
37
35
33
32
17
15
23
24
16
38
36
34
31
9
10
26
26
26
12
FRONT VIEW OF
MAIN CONTROL VALVE
81
82
80
ART_1001216800_5OF6

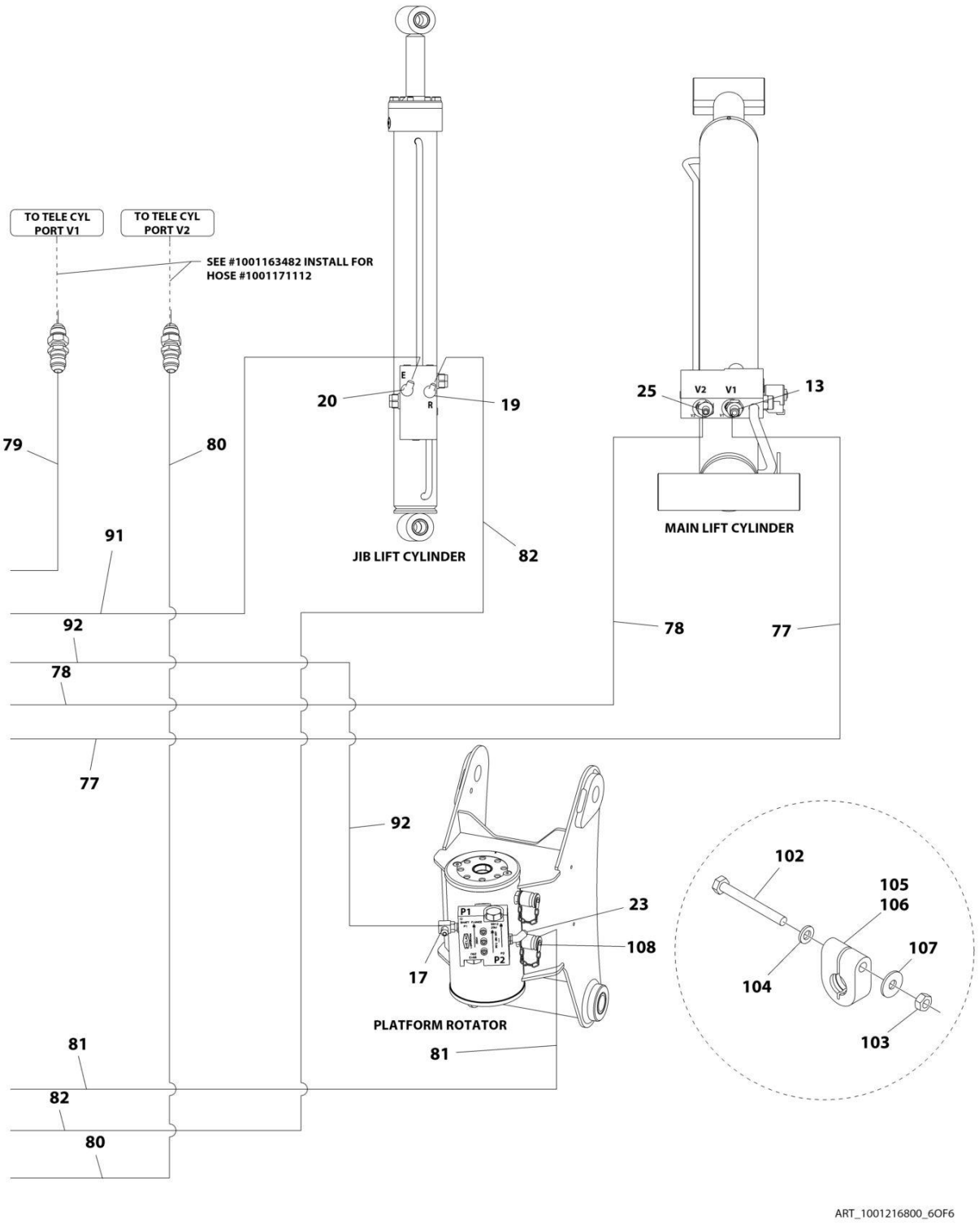
TO TELE CYL PORT V1
TO TELE CYL PORT V2
SEE #1001163482 INSTALL FOR HOSE #1001171112
79
80
91
92
78
77
20
19
E
R
JIB LIFT CYLINDER
82
25
V2
V1
13
MAIN LIFT CYLINDER
78
77
92
23
108
17
P1
P2
PLATFORM ROTATOR
81
81
82
80
102
105
106
107
104
103
ART_1001216800_6OF6

FIGURE 7-8. 460SJ 2WD HYDRAULIC SYSTEM INSTALLATION (SN 0300220610 through 0300272360)

ITEM	PART NUMBER	QTY	DESCRIPTION	REV
	1001216800	Ref	460SJ 2WD HYDRAULIC SYSTEM INSTALLATION	D
1	2110810	4	Fitting, Straight ORFS/ORB	
2	2110812	4	Fitting, Straight ORFS/ORB	
3	2111216	5	Fitting, Straight ORFS/ORB	
4	2131212	2	Fitting, 90 ORFS/ORB	
5	2131216	1	Fitting, 90 ORFS/ORB	
7	1001202910	2	Fitting, Straight MORB	
8	2220366	2	Fitting, 90 JIC/ORB	
9	2220371	12	Fitting, Straight JIC/ORB	
10	2220372	9	Fitting, Straight JIC/ORB	
11	2220373	5	Fitting, Straight JIC/ORB	
12	2220374	2	Fitting, Straight JIC/ORB **(SN 0300220610 through 0300226846)**	
12	2220374	3	Fitting, Straight JIC/ORB **(SN 0300226847 through 0300272360, Except SN 0300272174 through 0300272184)**	
13	2220375	2	Fitting, Straight JIC/ORB **(SN 0300220610 through 0300226846)**	
13	2220375	1	Fitting, Straight JIC/ORB **(SN 0300226847 through 0300272360, Except SN 0300272174 through 0300272184)**	
14	2220377	3	Fitting, Straight JIC/ORB	
15	2220415	2	Fitting, Straight JIC/ORB	
16	2220451	1	Fitting, Straight JIC/ORB	
17	2220466	3	Fitting, 90 JIC/ORB	
18	2220468	2	Fitting, Straight JIC/ORB	
19	2220472	1	Fitting, 90 JIC/ORB	
20	2220473	9	Fitting, 90 JIC/ORB	
22	2220501	2	Fitting, 45 JIC/ORB	
23	2220502	1	Fitting, 45 JIC/ORB	
25	2220577	1	Fitting, Straight JIC/ORB **(SN 0300220610 through 0300226846)**	
25	2220497	1	Fitting, Straight JIC/ORB **(SN 0300226847 through 0300272360, Except SN 0300272174 through 0300272184)**	
26	2220582	4	Fitting, Straight JIC/ORB	
27	2220238	2	Plug	
28	2220600	2	Fitting, Straight JIC/ORB	
29	1001197272	1	Fitting, Tee JIC/ORB/JIC	
32	2220628	1	Fitting, 90 JIC/ORB	
34	2220695	1	Fitting, Tee JIC/ORB/JIC	
35	2220726	1	Fitting, 90 JIC/ORB	
36	2220775	1	Fitting, 90 JIC/ORB	
37	2220237	1	Plug #6	
38	2220906	1	Fitting, 90 JIC/ORB	
39	2220923	2	Fitting, Straight JIC/ORB	
40	2220946	2	Fitting, Straight JIC/ORB	
41	2220947	2	Fitting, Straight JIC/ORB **(SN 0300220610 through 0300222808)**	
41	2220947	1	Fitting, Straight JIC/ORB **(SN 0300222809 through 0300272360, Except SN 0300272174 through 0300272184)**	
42	2220998	2	Fitting, Straight JIC/ORB	
43	4240018	15	Tie-Strap (Not Shown)	
44	80633030	2	Clamp	
46	1001098928	1	Clamp (Not Shown)	
47	1001172692	2	Hose	
48	1001172695	2	Hose	

ITEM	PART NUMBER	QTY	DESCRIPTION	REV
49	1001172697	4	Hose	
52	1001197284	1	Hose	
64	1001207332	1	Hose	
65	1001216655	1	Hose	
66	1001172716	1	Hose	
67	1001172717	1	Hose	
68	1001172718	1	Hose	
69	1001172719	1	Hose	
70	1001207333	1	Hose	
71	1001172721	1	Hose	
72	1001172722	2	Hose	
73	1001172723	3	Hose	
74	1001173898	1	Hose	
75	1001173899	1	Hose **(SN 0300220610 through 0300222808)**	
75	2752500	1	Hose **(SN 0300222809 through 0300272360, Except SN 0300272174 through 0300272184)**	
76	1001173900	2	Hose	
77	1001173901	1	Hose	
78	1001173902	1	Hose	
79	1001173903	1	Hose	
80	1001173904	1	Hose	
81	1001173905	1	Hose	
82	1001173906	1	Hose	
83	1001173907	1	Hose	
84	1001173908	1	Hose	
85	1001173909	1	Hose	
86	1001173937	1	Hose	
87	1001193654	1	Hose	
88	1001207331	1	Hose **(SN 0300220610 through 0300222808)**	
88	1001172713	1	Hose **(SN 0300222809 through 0300226923)**	
88	1001207332	1	Hose **(SN 0300226924 through 0300272360, Except SN 0300272174 through 0300272184)**	
89	1001181074	1	Hose	
90	1001181075	1	Hose	
91	1001181076	1	Hose	
92	1001181077	1	Hose	
97	1001184542	1	Hose	
98	1001184543	1	Hose	
99	1001184561	1	Hose	
100	1001184562	1	Hose	
101	1001184563	1	Hose	
102	0700619	2	Bolt, M6 x 55	
103	3290601	2	Nut, M6 x 1	
104	4811700	2	Washer, M6	
105	1001191275	1	Clamp	
106	1001191276	1	Clamp	
107	4811702	1	Washer, M6	
108	2221086	4	Fitting, Diagnostic Test Port	
117	88662037	1	Fitting, Straight JIC/ORB **(SN 0300222809 through 0300272360, Except SN 0300272174 through 0300272184)**	

FIGURE 7-9. 460SJ 4WD HYDRAULIC SYSTEM INSTALLATION (WITHOUT ARCTIC PACKAGE) (SN 0300203771 through 0300214505)

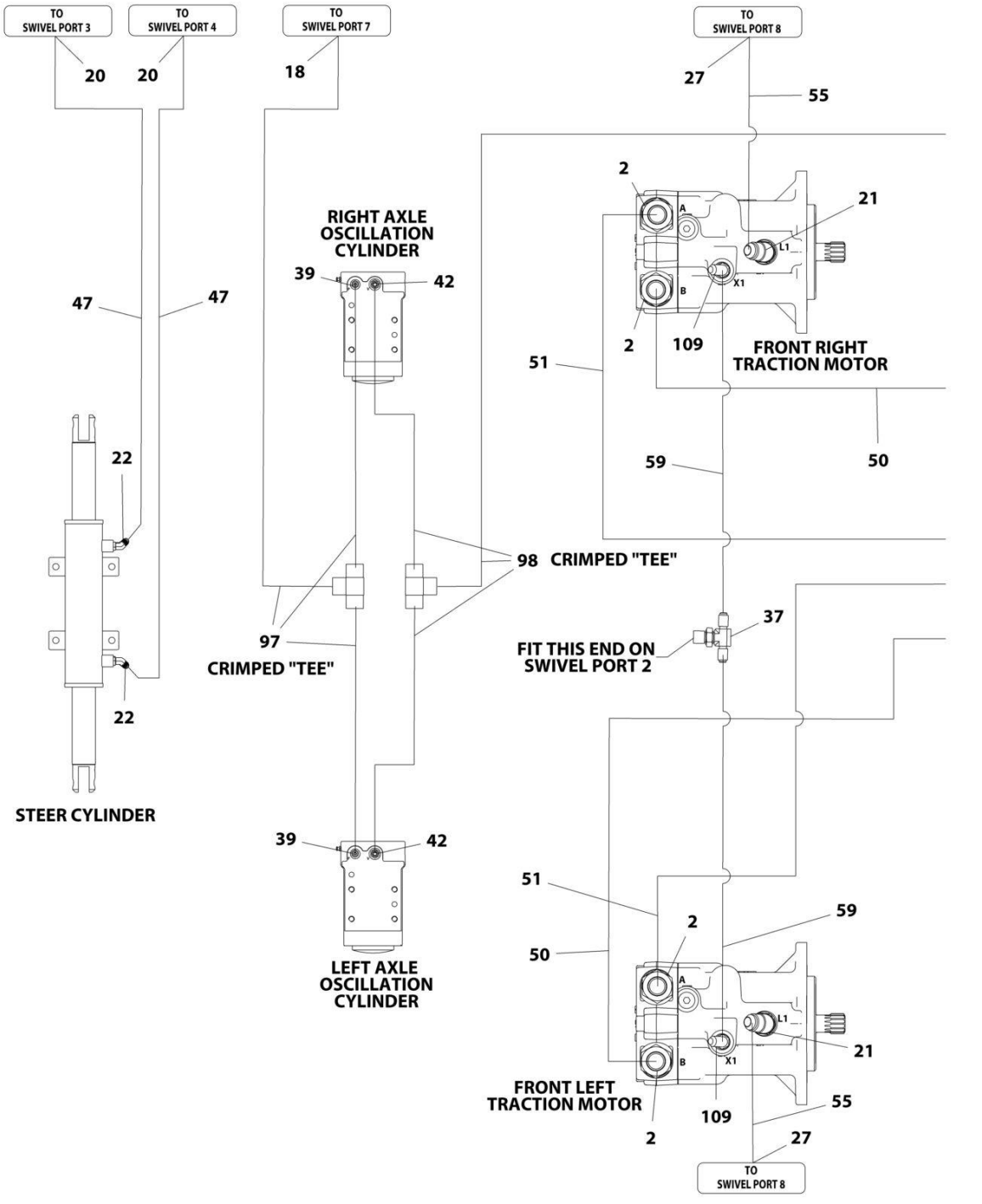

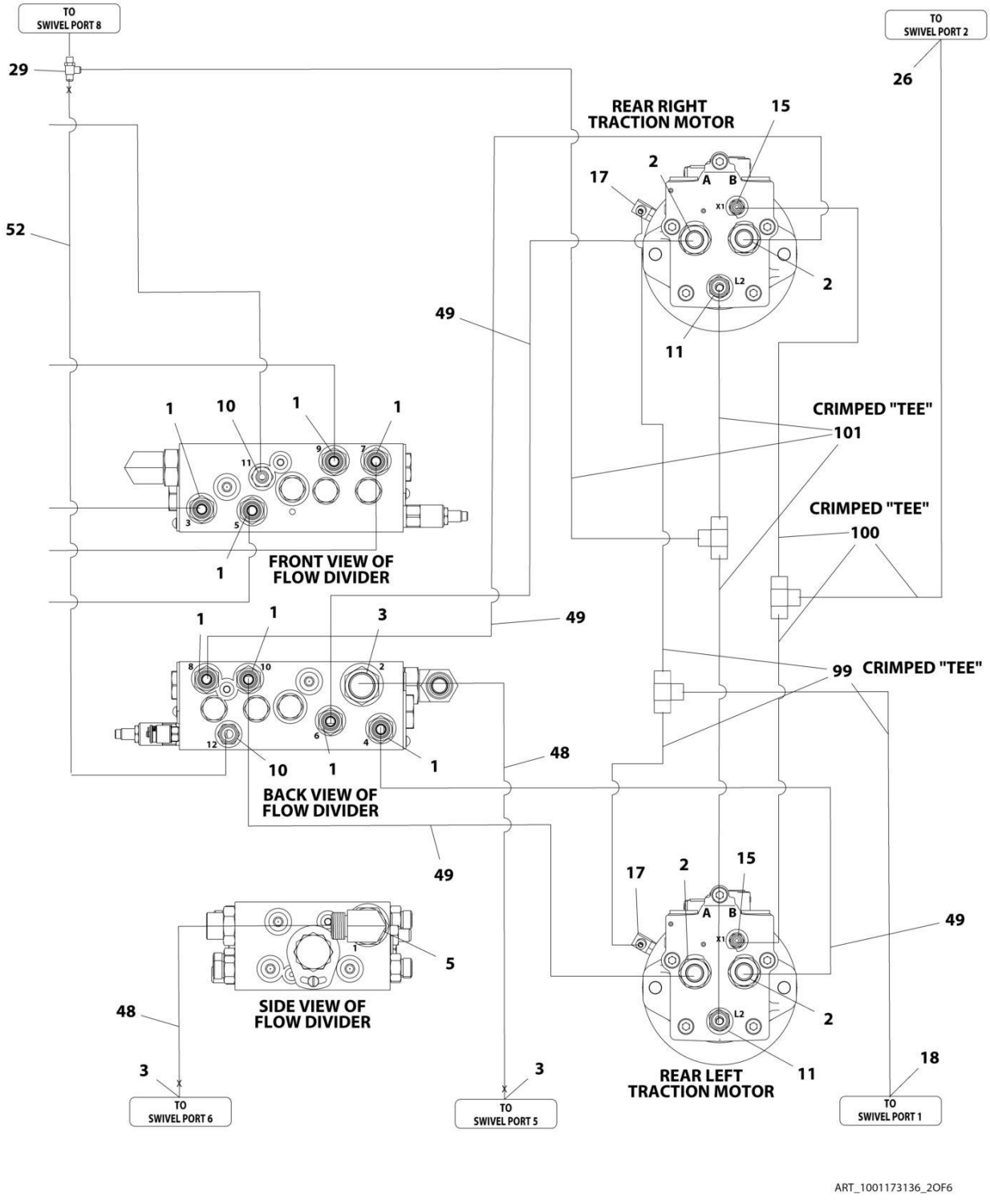
TO SWIVEL PORT 8
TO SWIVEL PORT 2
29
26
REAR RIGHT TRACTION MOTOR
15
2
17
A
B
X1
L2
52
49
11
CRIMPED "TEE"
101
CRIMPED "TEE"
100
FRONT VIEW OF FLOW DIVIDER
99 CRIMPED "TEE"
BACK VIEW OF FLOW DIVIDER
48
SIDE VIEW OF FLOW DIVIDER
REAR LEFT TRACTION MOTOR
18
TO SWIVEL PORT 6
TO SWIVEL PORT 5
TO SWIVEL PORT 1
ART_1001173136_2OF6

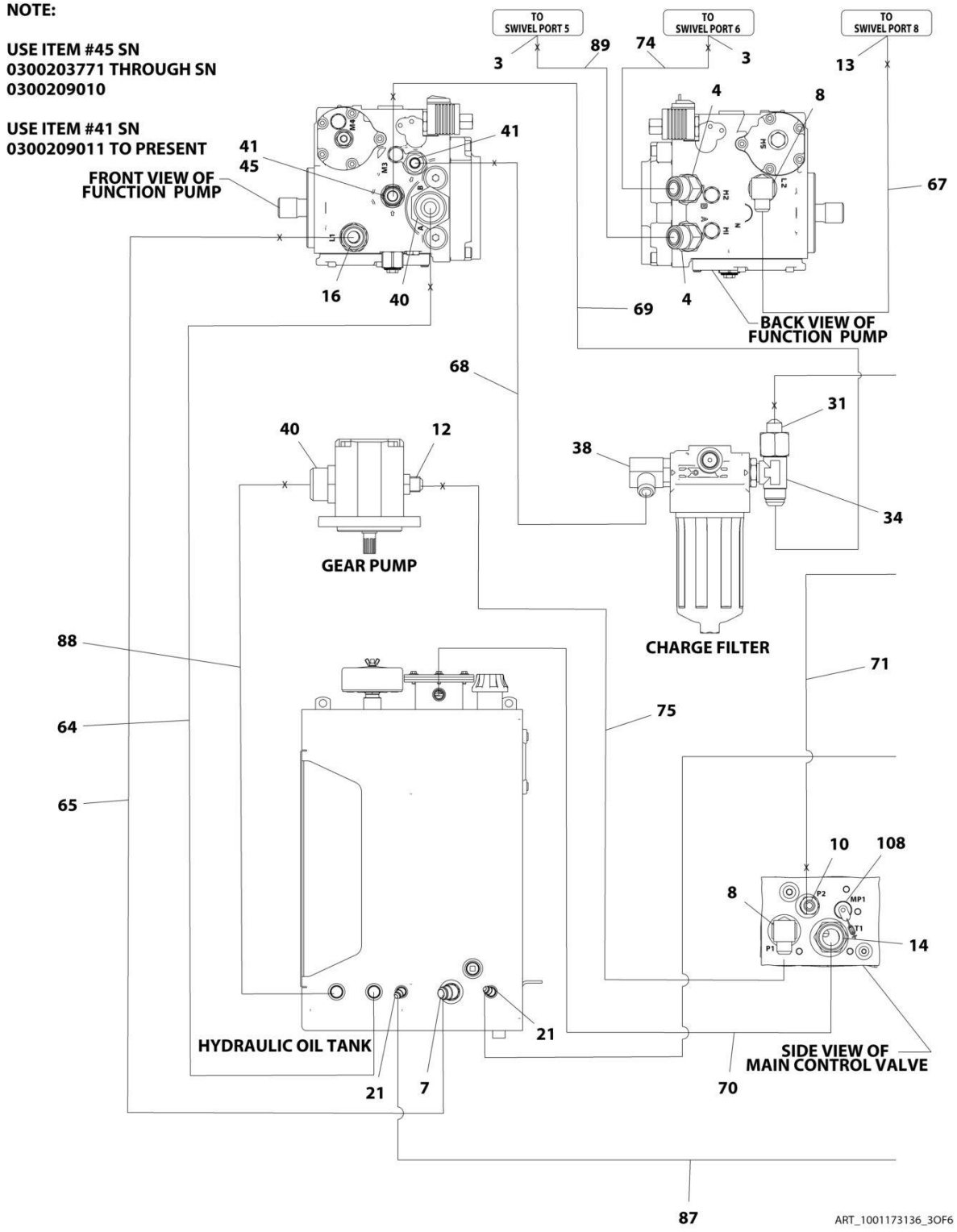
NOTE:
USE ITEM #45 SN 0300203771 THROUGH SN 0300209010
USE ITEM #41 SN 0300209011 TO PRESENT
TO SWIVEL PORT 5
TO SWIVEL PORT 6
TO SWIVEL PORT 8
FRONT VIEW OF FUNCTION PUMP
BACK VIEW OF FUNCTION PUMP
GEAR PUMP
CHARGE FILTER
HYDRAULIC OIL TANK
SIDE VIEW OF MAIN CONTROL VALVE
ART_1001173136_3OF6

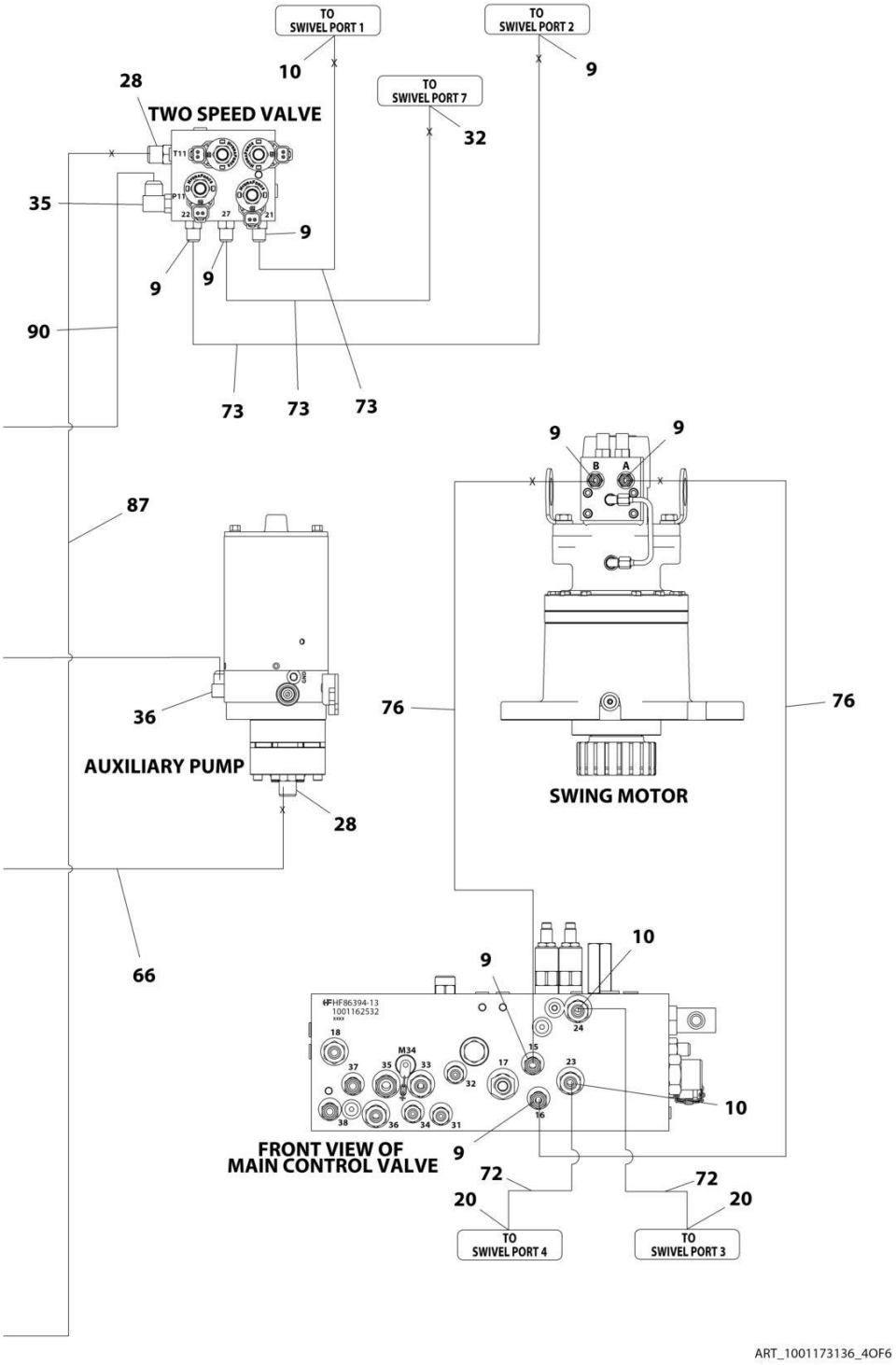

ART_1001173136_4OF6

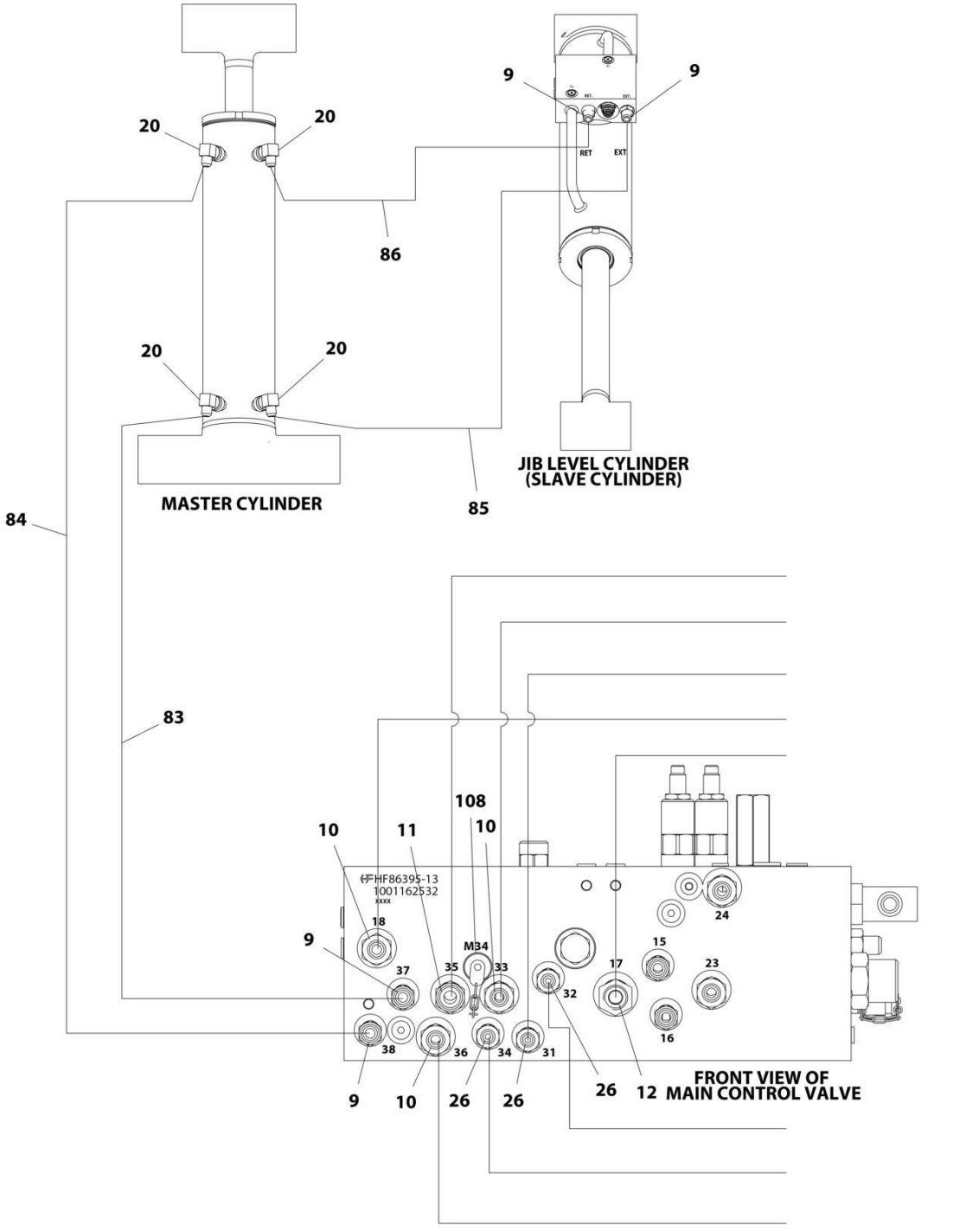
9
9
20
20
RET
EXT
86
20
20
JIB LEVEL CYLINDER
(SLAVE CYLINDER)
MASTER CYLINDER
85
84
83
108
10
11
10
HF86395-13
1001162532
xxxx
18
9
M34
37
35
33
32
17
15
24
23
16
38
36
34
31
9
10
26
26
26
12
FRONT VIEW OF
MAIN CONTROL VALVE
ART_1001173136_5OF6

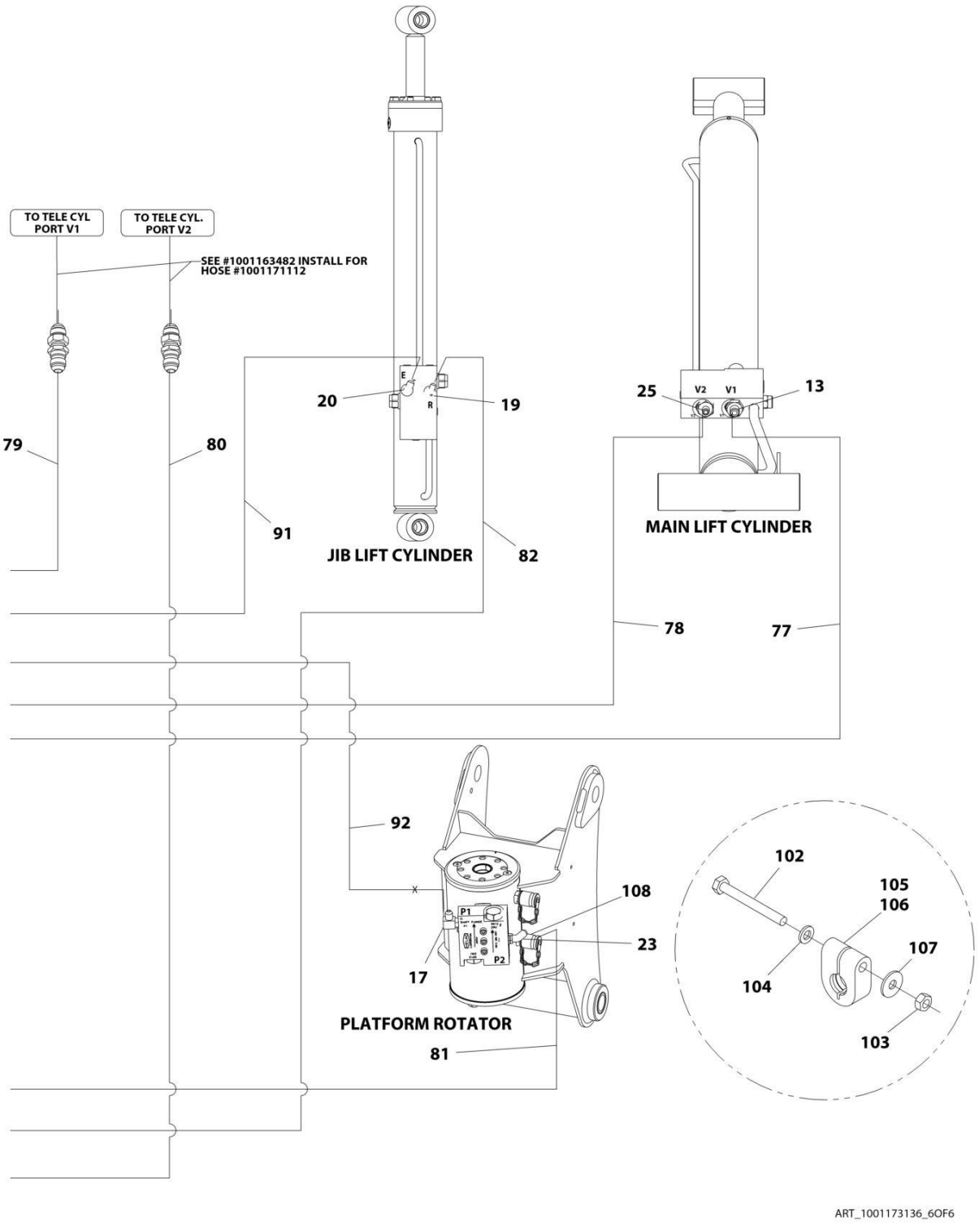
TO TELE CYL PORT V1
TO TELE CYL. PORT V2
SEE #1001163482 INSTALL FOR HOSE #1001171112
79
80
91
20
19
E
R
JIB LIFT CYLINDER
82
25
V2
V1
13
MAIN LIFT CYLINDER
78
77
92
108
23
17
P1
P2
PLATFORM ROTATOR
81
102
105
106
107
104
103
ART_1001173136_6OF6

FIGURE 7-9. 460SJ 4WD HYDRAULIC SYSTEM INSTALLATION (WITHOUT ARCTIC PACKAGE) (SN 0300203771 through 0300214505)

ITEM	PART NUMBER	QTY	DESCRIPTION	REV
	1001173136	Ref	460SJ 4WD HYDRAULIC SYSTEM INSTALLATION	K
1	2110810	8	Fitting, Straight ORFS/ORB	
2	2110812	8	Fitting, Straight ORFS/ORB	
3	2111216	5	Fitting, Straight ORFS/ORB	
4	2131212	AR	Fitting, 90 ORFS/ORB	
5	2131216	1	Fitting, 90 ORFS/ORB	
7	2220365	1	Fitting, 45 JIC/ORB	
8	2220366	2	Fitting, 90 JIC/ORB	
9	2220371	12	Fitting, Straight JIC/ORB	
10	2220372	9	Fitting, Straight JIC/ORB	
11	2220373	3	Fitting, Straight JIC/ORB	
12	2220374	2	Fitting, Straight JIC/ORB	
13	2220375	2	Fitting, Straight JIC/ORB	
14	2220377	1	Fitting, Straight JIC/ORB	
15	2220415	2	Fitting, Straight JIC/ORB	
16	2220451	1	Fitting, Straight JIC/ORB	
17	2220466	3	Fitting, 90 JIC/ORB	
18	2220468	2	Fitting, Straight JIC/ORB	
19	2220472	1	Fitting, 90 JIC/ORB	
20	2220473	9	Fitting, 90 JIC/ORB	
21	2220500	4	Fitting, 45 JIC/ORB	
22	2220501	2	Fitting, 45 JIC/ORB	
23	2220502	1	Fitting, 45 JIC/ORB	
25	2220577	1	Fitting, Straight JIC/ORB	
26	2220582	4	Fitting, Straight JIC/ORB	
27	2220596	2	Fitting, 90 JIC/ORB	
28	2220600	2	Fitting, Straight JIC/ORB	
29	1001197272	1	Fitting, Tee JIC/ORB/JIC	
31	2220622	AR	Fitting, Straight JIC/FSJIC	
32	2220628	1	Fitting, 90 JIC/ORB	
34	2220695	1	Fitting, Tee JIC/ORB/JIC	
35	2220726	1	Fitting, 90 JIC/ORB	
36	2220775	1	Fitting, 90 JIC/ORB	
37	1001175024	1	Fitting, Tee JIC/JIC/ORB	
38	2220906	1	Fitting, 90 JIC/ORB	
39	2220923	2	Fitting, Straight JIC/ORB	
40	2220946	2	Fitting, Straight JIC/ORB	
41	2220947	2	Fitting, Straight JIC/ORB	
42	2220998	2	Fitting, Straight JIC/ORB	
43	4240018	22	Tie-Strap	
44	80633030	2	Clamp	
45	88662037	AR	Fitting, Straight JIC/ORB	
46	1001098928	1	Clamp	
47	1001172692	2	Hose	
48	1001172695	2	Hose	
49	1001172697	4	Hose	
50	1001172698	2	Hose	
51	1001172699	2	Hose	
52	1001197284	1	Hose	

ITEM	PART NUMBER	QTY	DESCRIPTION	REV
55	1001172703	2	Hose	
59	1001172707	2	Hose	
64	1001172713	1	Hose	
65	1001172715	1	Hose	
66	1001172716	1	Hose	
67	1001172717	1	Hose	
68	1001172718	1	Hose	
69	1001172719	1	Hose	
70	1001172720	1	Hose	
71	1001172721	1	Hose	
72	1001172722	2	Hose	
73	1001172723	3	Hose	
74	1001173898	1	Hose	
75	1001173899	1	Hose	
76	1001173900	2	Hose	
77	1001173901	1	Hose	
78	1001173902	1	Hose	
79	1001173903	1	Hose	
80	1001173904	1	Hose	
81	1001173905	1	Hose	
82	1001173906	1	Hose	
83	1001173907	1	Hose	
84	1001173908	1	Hose	
85	1001173909	1	Hose	
86	1001173937	1	Hose	
87	1001173938	1	Hose	
88	1001181073	1	Hose	
89	1001181074	1	Hose	
90	1001181075	1	Hose	
91	1001181076	1	Hose	
92	1001181077	1	Hose	
97	1001184542	1	Hose	
98	1001184543	1	Hose	
99	1001184561	1	Hose	
100	1001184562	1	Hose	
101	1001184563	1	Hose	
102	0700619	2	Bolt, M6 x 55	
103	3290601	2	Nut, M6 x 1	
104	4811700	2	Washer, M6	
105	1001191275	1	Clamp	
106	1001191276	1	Clamp	
107	4811702	2	Washer, M6	
108	2221086	4	Fitting, Diagnostic Test Port	
109	2221040	2	Fitting, 45 JIC/ORB **(SN 0300209011 through 0300214505)**	

FIGURE 7-10. 460SJ 4WD HYDRAULIC SYSTEM INSTALLATION (WITH ARCTIC PACKAGE) (SN 0300203771 through 0300214505)

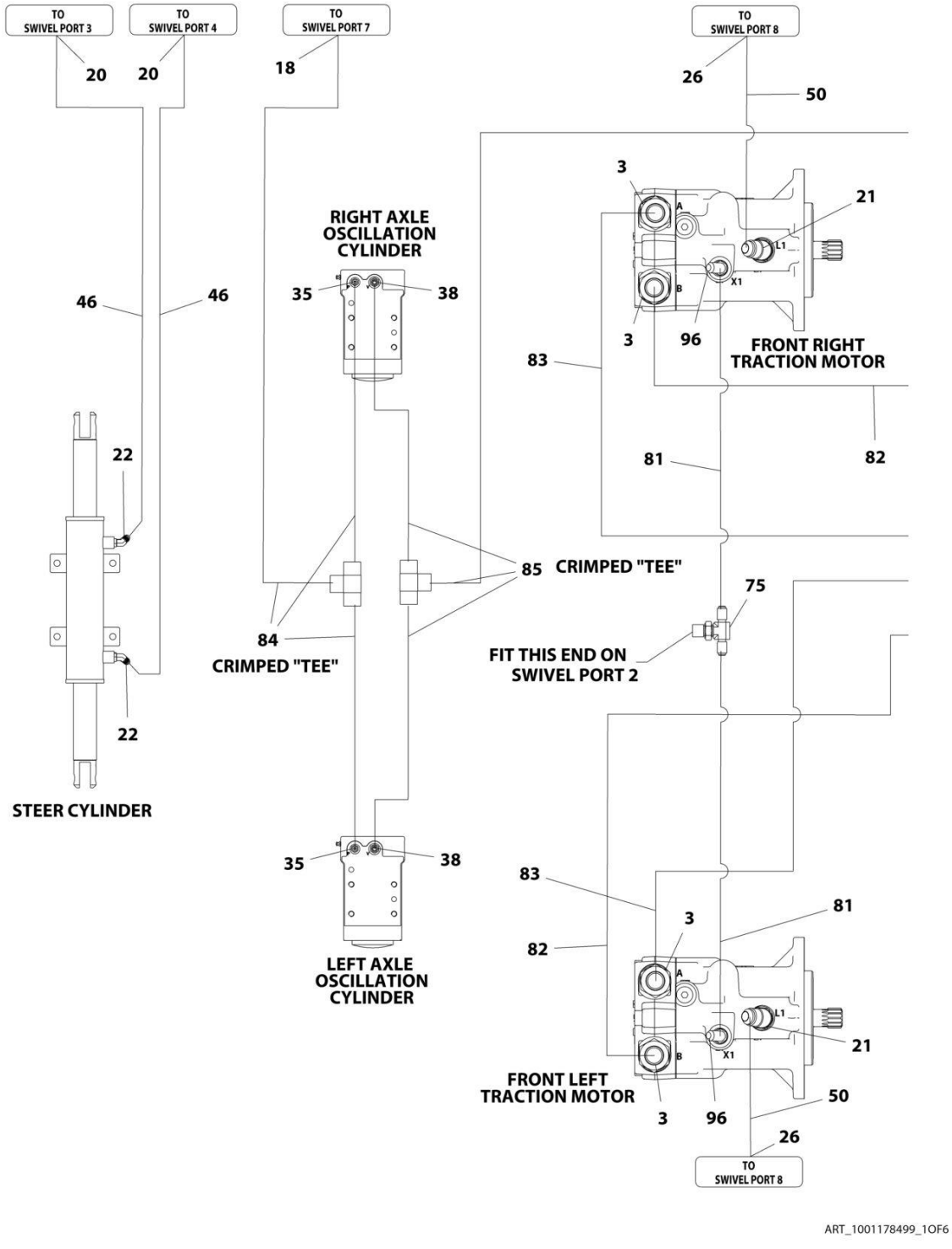

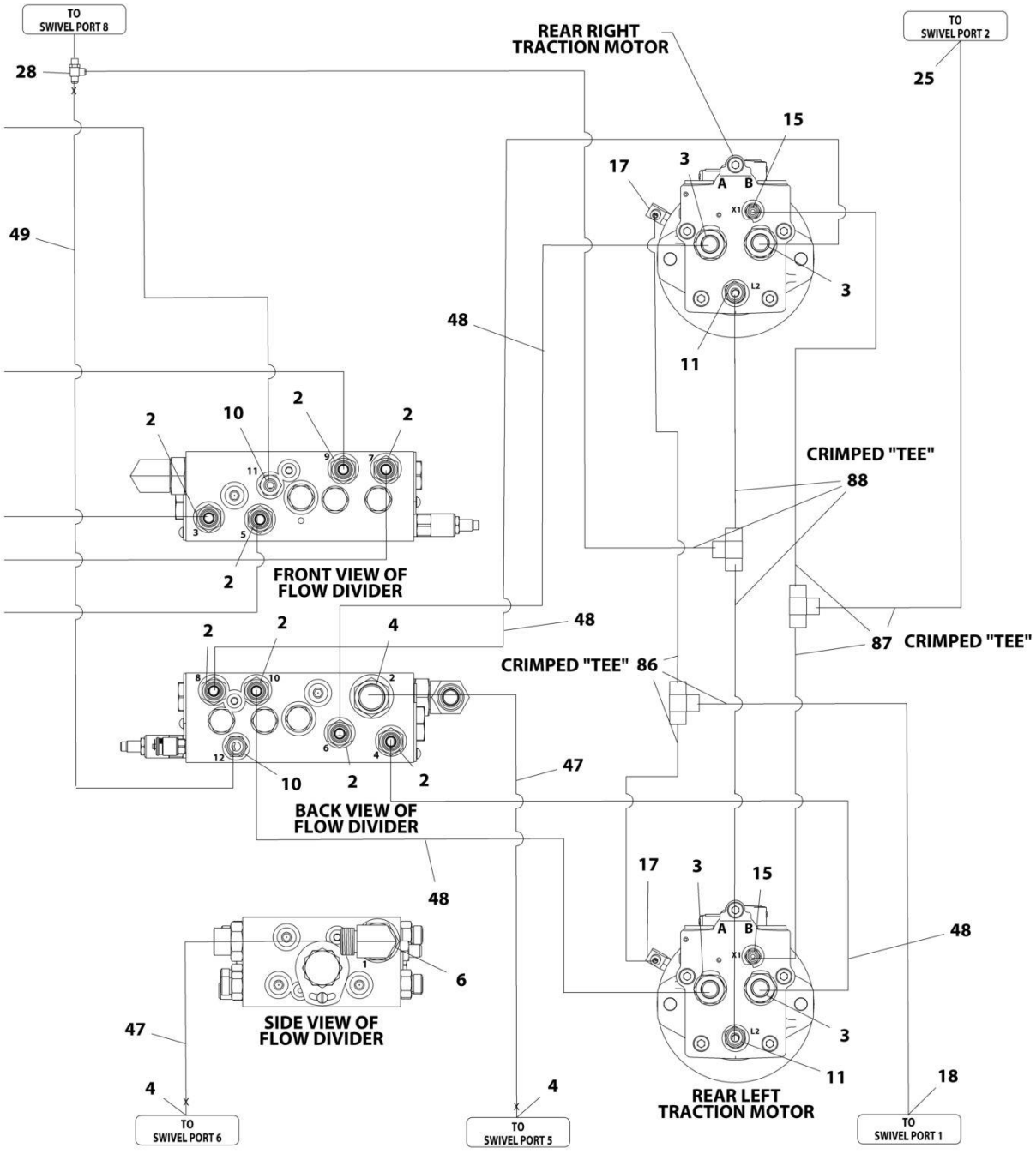

ART_1001178499_2OF6

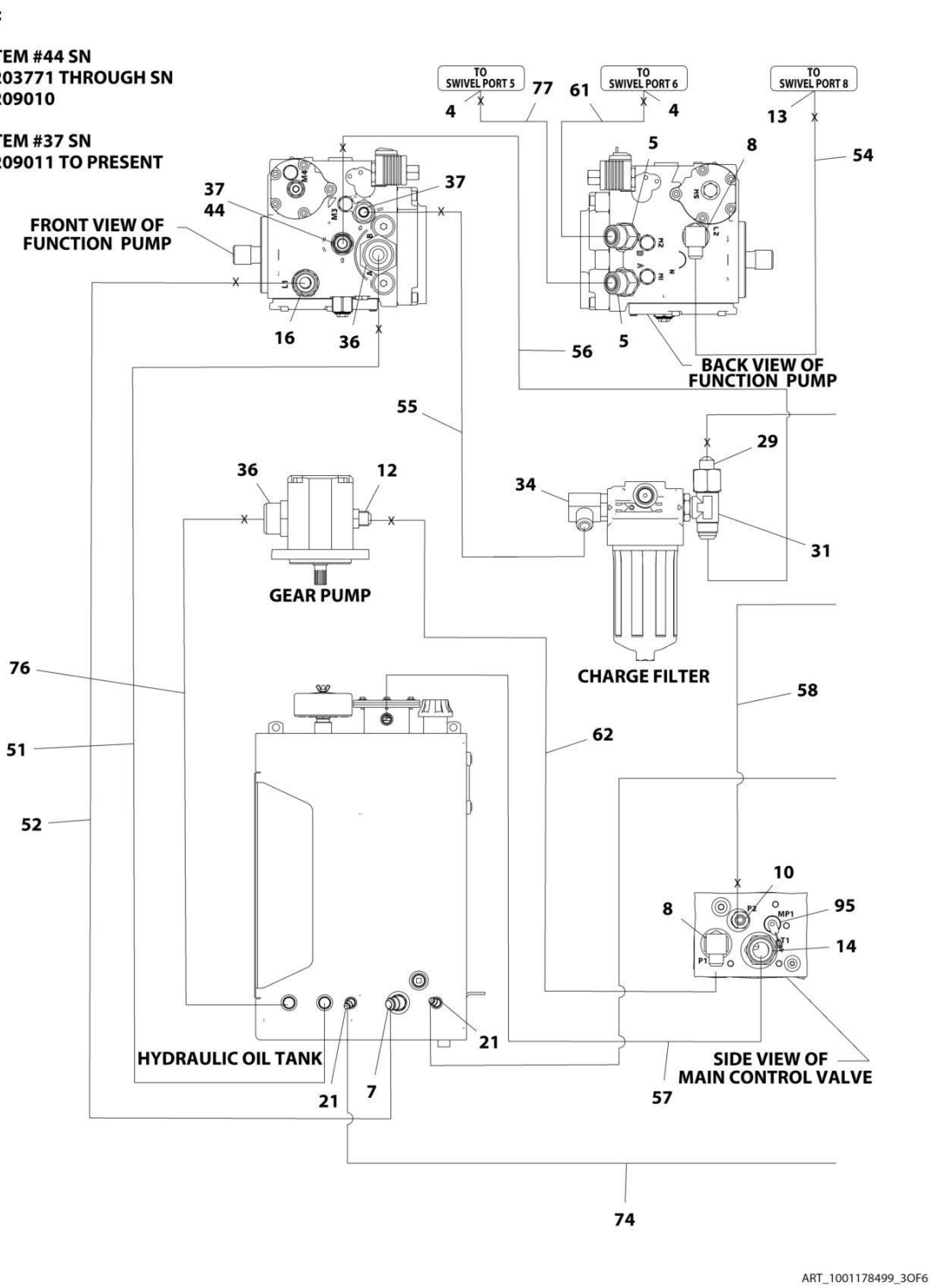
NOTE:
USE ITEM #44 SN 0300203771 THROUGH SN 0300209010
USE ITEM #37 SN 0300209011 TO PRESENT
TO SWIVEL PORT 5
TO SWIVEL PORT 6
TO SWIVEL PORT 8
FRONT VIEW OF FUNCTION PUMP
BACK VIEW OF FUNCTION PUMP
GEAR PUMP
CHARGE FILTER
HYDRAULIC OIL TANK
SIDE VIEW OF MAIN CONTROL VALVE
4
77
61
4
13
5
8
54
37
44
37
16
36
56
5
55
29
36
12
34
31
76
58
51
62
52
10
8
95
14
21
21
7
57
74
ART_1001178499_3OF6

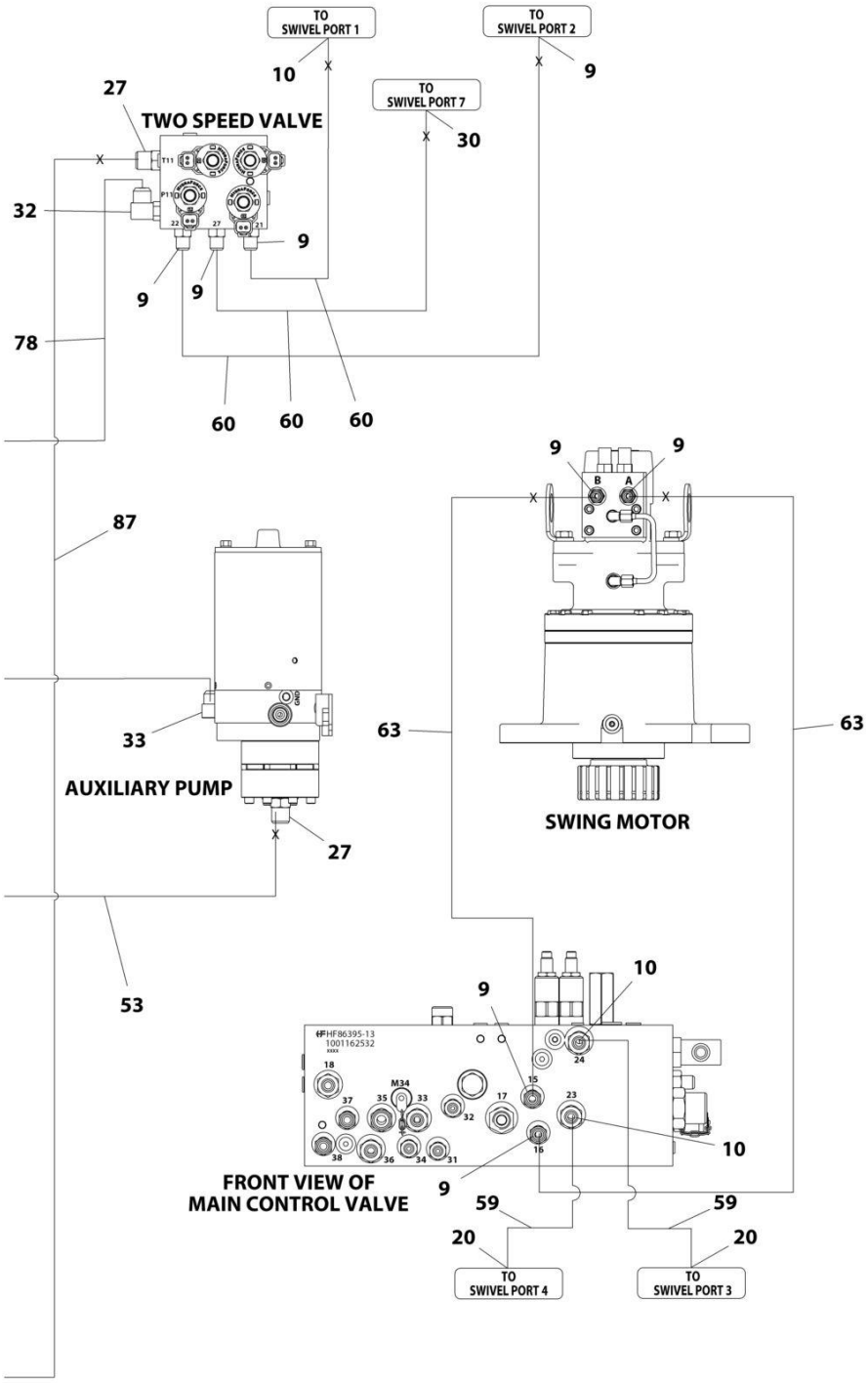

ART_1001178499_4OF6

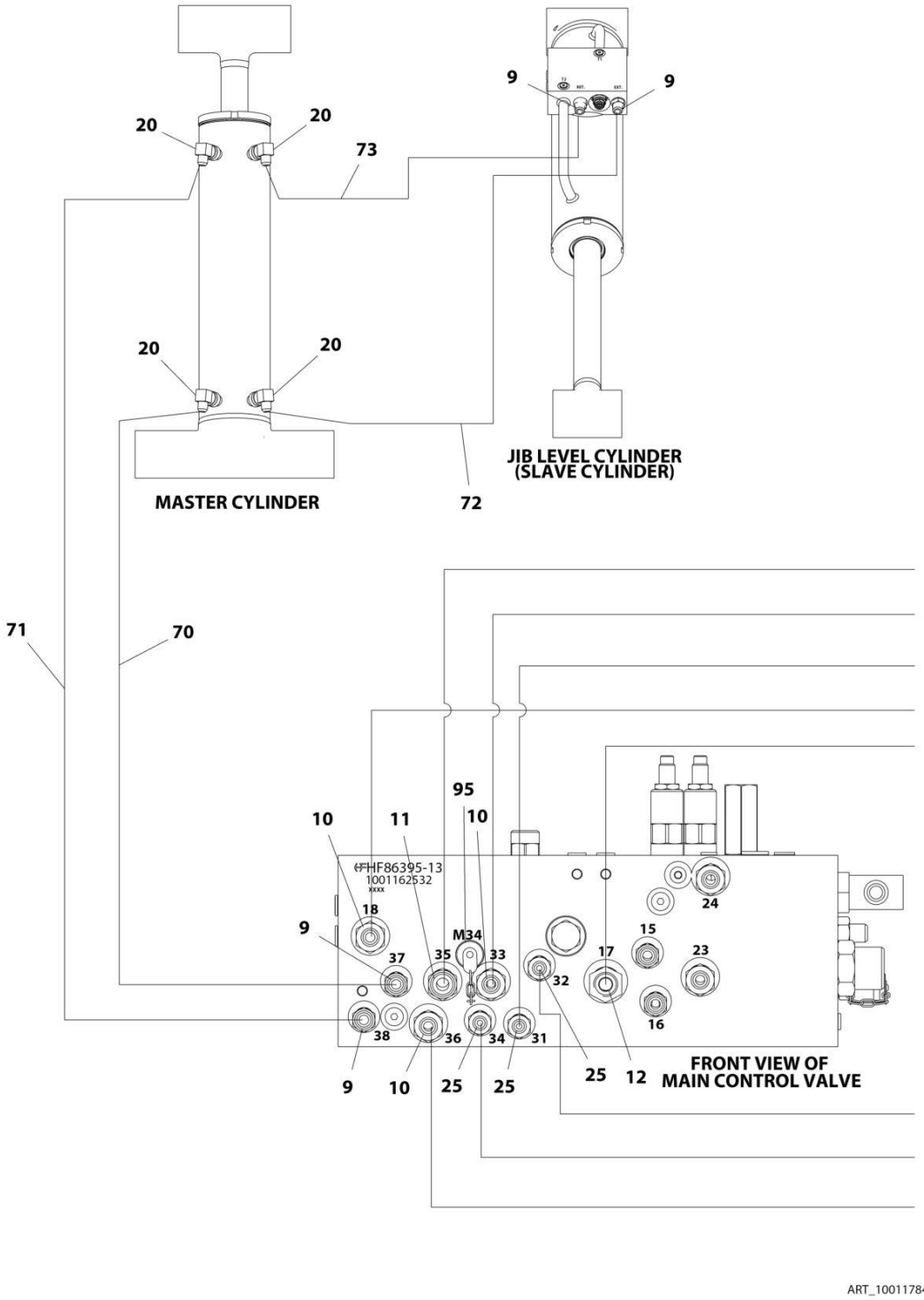

ART_1001178499_5OF6

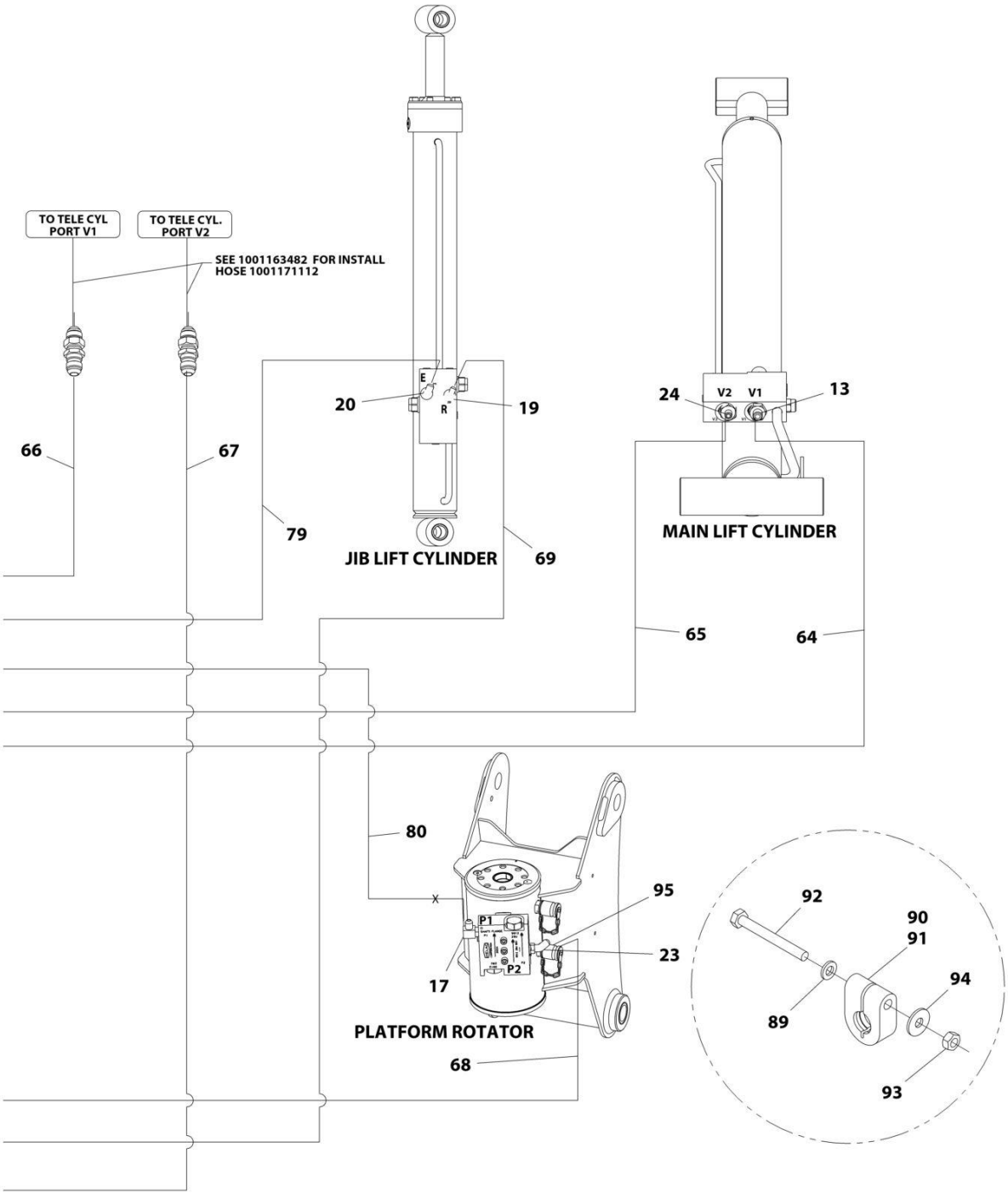
TO TELE CYL PORT V1
TO TELE CYL. PORT V2
SEE 1001163482 FOR INSTALL HOSE 1001171112
66
67
79
20
E
R
19
JIB LIFT CYLINDER
69
24
V2
V1
13
MAIN LIFT CYLINDER
65
64
80
95
23
17
P1
P2
PLATFORM ROTATOR
68
92
90
91
94
89
93
ART_1001178499_6OF6

FIGURE 7-10. 460SJ 4WD HYDRAULIC SYSTEM INSTALLATION (WITH ARCTIC PACKAGE) (SN 0300203771 through 0300214505)

ITEM	PART NUMBER	QTY	DESCRIPTION	REV
	1001178499	Ref	460SJ 4WD HYDRAULIC SYSTEM INSTALLATION	G
2	2110810	8	Fitting, Straight ORFS/ORB	
3	2110812	8	Fitting, Straight ORFS/ORB	
4	2111216	5	Fitting, Straight ORFS/ORB	
5	2131212	2	Fitting, 90 ORFS/ORB **(SN 0300203771 through 0300209010)**	
5	2151212	2	Fitting, 45 JIC/ORB **(SN 0300209011 through 0300214505)**	
6	2131216	1	Fitting, 90 ORFS/ORB	
7	2220365	1	Fitting, 45 JIC/ORB	
8	2220366	2	Fitting, 90 JIC/ORB	
9	2220371	12	Fitting, Straight JIC/ORB	
10	2220372	9	Fitting, Straight JIC/ORB	
11	2220373	3	Fitting, Straight JIC/ORB	
12	2220374	2	Fitting, Straight JIC/ORB	
13	2220375	2	Fitting, Straight JIC/ORB	
14	2220377	1	Fitting, Straight JIC/ORB	
15	2220415	2	Fitting, Straight JIC/ORB	
16	2220451	1	Fitting, Straight JIC/ORB	
17	2220466	3	Fitting, 90 JIC/ORB	
18	2220468	2	Fitting, Straight JIC/ORB	
19	2220472	1	Fitting, 90 JIC/ORB	
20	2220473	9	Fitting, 90 JIC/ORB	
21	2220500	4	Fitting, 45 JIC/ORB	
22	2220501	2	Fitting, 45 JIC/ORB	
23	2220502	1	Fitting, 45 JIC/ORB	
24	2220577	1	Fitting, Straight JIC/ORB	
25	2220582	4	Fitting, Straight JIC/ORB	
26	2220596	2	Fitting, 90 JIC/ORB	
27	2220600	2	Fitting, Straight JIC/ORB	
28	1001197272	1	Fitting, Tee JIC/ORB/JIC	
29	2220622	1	Fitting, Straight JIC/FSJIC **(SN 0300203771 through 0300209010)**	
30	2220628	1	Fitting, 90 JIC/ORB	
31	2220695	1	Fitting, Tee JIC/ORB/JIC	
32	2220726	1	Fitting, 90 JIC/ORB	
33	2220775	1	Fitting, 90 JIC/ORB	
34	2220906	1	Fitting, 90 JIC/ORB	
35	2220923	2	Fitting, Straight JIC/ORB	
36	2220946	2	Fitting, Straight JIC/ORB	
37	2220947	2	Fitting, Straight JIC/ORB	
38	2220998	2	Fitting, Straight JIC/ORB	
40	4240018	22	Tie-Strap	
43	80633030	2	Clamp	
44	88662037	1	Fitting, Straight JIC/ORB **(SN 0300203771 through 0300209010)**	
45	1001098928	1	Clamp	
46	1001172692	2	Hose	
47	1001172695	2	Hose	
48	1001172697	4	Hose	
49	1001197284	1	Hose	
50	1001172703	2	Hose	
51	1001172713	1	Hose	

ITEM	PART NUMBER	QTY	DESCRIPTION	REV
52	1001172715	1	Hose	
53	1001172716	1	Hose	
54	1001172717	1	Hose	
55	1001172718	1	Hose	
56	1001172719	1	Hose	
57	1001172720	1	Hose	
58	1001172721	1	Hose	
59	1001172722	2	Hose	
60	1001172723	3	Hose	
61	1001173898	1	Hose	
62	1001173899	1	Hose	
63	1001173900	2	Hose	
64	1001173901	1	Hose	
65	1001173902	1	Hose	
66	1001173903	1	Hose	
67	1001173904	1	Hose	
68	1001173905	1	Hose	
69	1001173906	1	Hose	
70	1001173907	1	Hose	
71	1001173908	1	Hose	
72	1001173909	1	Hose	
73	1001173937	1	Hose	
74	1001173938	1	Hose	
75	1001175024	1	Fitting, Tee JIC/JIC/ORB	
76	1001181073	1	Hose	
77	1001181074	1	Hose	
78	1001181075	1	Hose	
79	1001181076	1	Hose	
80	1001181077	1	Hose	
81	1001183216	2	Hose	
82	1001183217	2	Hose	
83	1001183218	2	Hose	
84	1001184542	1	Hose	
85	1001184543	1	Hose	
86	1001184561	1	Hose	
87	1001184562	1	Hose	
88	1001184563	1	Hose	
89	4811700	2	Washer, M6	
90	1001191275	1	Clamp	
91	1001191276	1	Clamp	
92	0760619	2	Bolt, M6 x 55	
93	3290601	2	Nut, M6 x 1	
94	4811702	2	Washer, M6	
95	2221086	4	Fitting, Diagnostic Test Port	
96	2221040	2	Fitting, 45 JIC/ORB **(SN 0300209011 through 0300214505)**	

FIGURE 7-11. 460SJ 4WD HYDRAULIC SYSTEM INSTALLATION (ALL MACHINES) (SN 0300214506 through 0300220609)

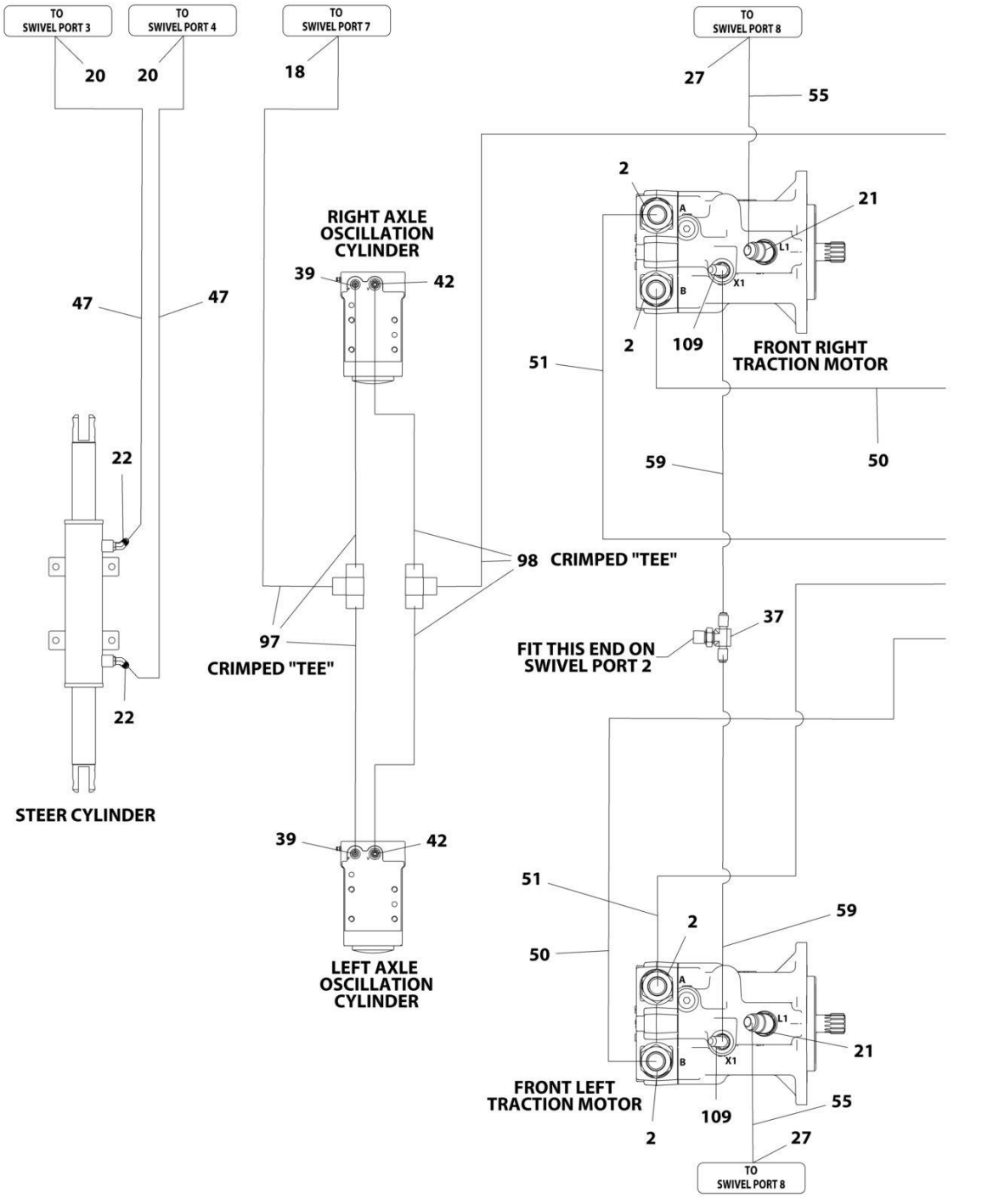

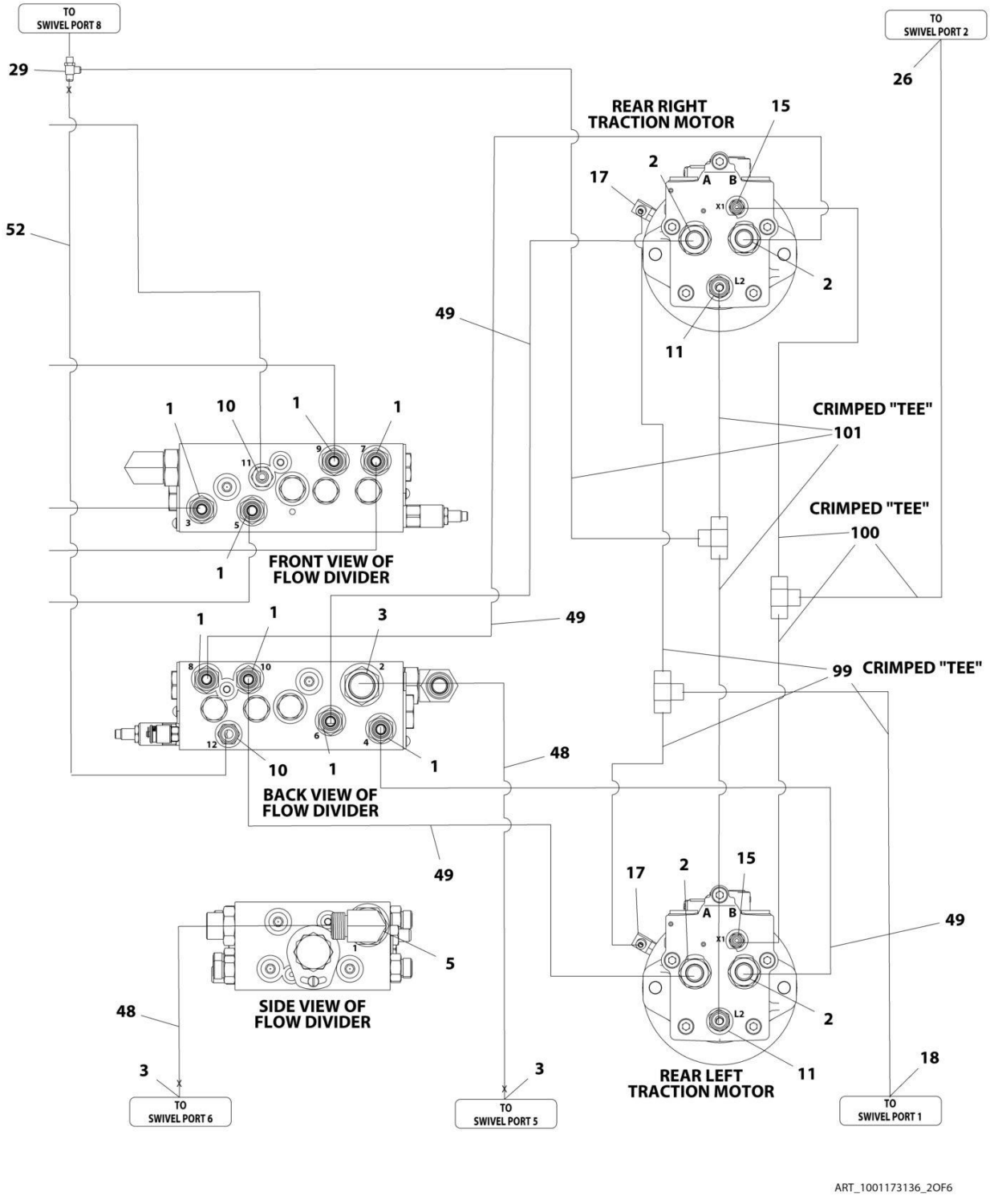

ART_1001173136_2OF6

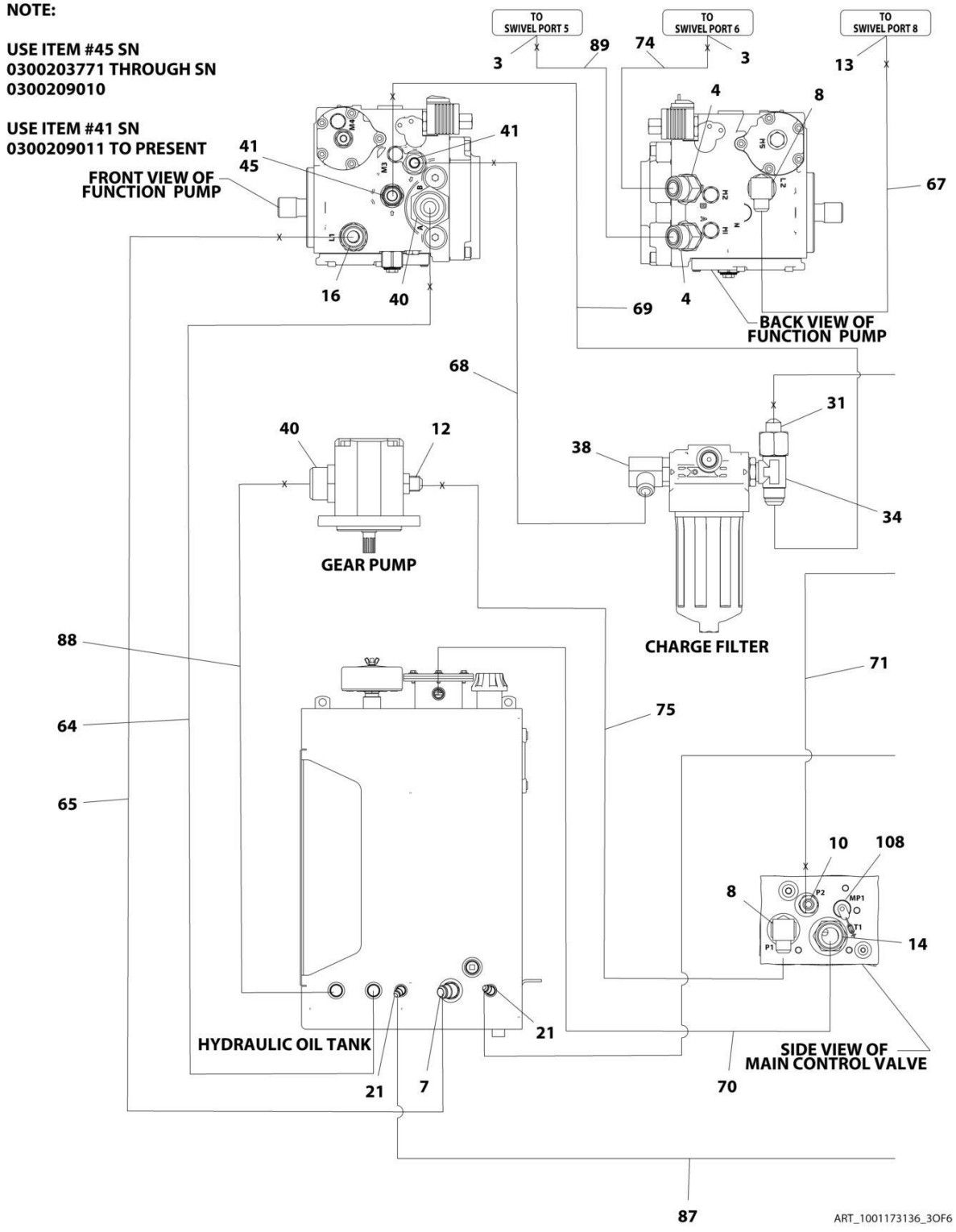
NOTE:
USE ITEM #45 SN 0300203771 THROUGH SN 0300209010
USE ITEM #41 SN 0300209011 TO PRESENT
TO SWIVEL PORT 5
TO SWIVEL PORT 6
TO SWIVEL PORT 8
FRONT VIEW OF FUNCTION PUMP
BACK VIEW OF FUNCTION PUMP
GEAR PUMP
CHARGE FILTER
HYDRAULIC OIL TANK
SIDE VIEW OF MAIN CONTROL VALVE
ART_1001173136_3OF6

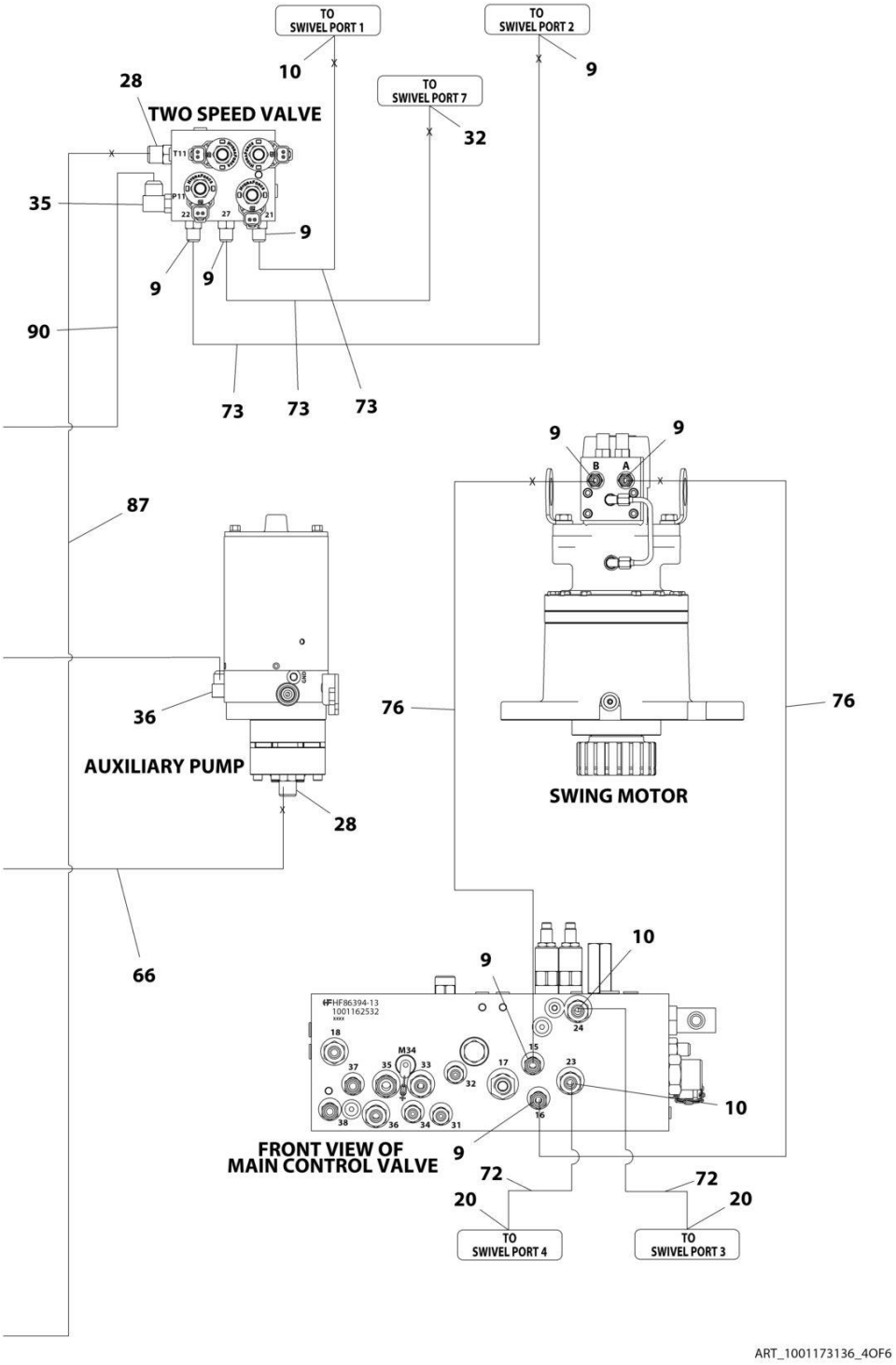
TO SWIVEL PORT 1
TO SWIVEL PORT 2
TO SWIVEL PORT 7
10
9
32
28
TWO SPEED VALVE
35
9
9
9
90
73
73
73
9
9
B
A
87
36
AUXILIARY PUMP
28
76
76
SWING MOTOR
66
10
9
HF86394-13
1001162532
xxxx
18
37
35
M34
33
32
17
15
23
24
10
38
36
34
31
16
9
FRONT VIEW OF
MAIN CONTROL VALVE
72
72
20
20
TO SWIVEL PORT 4
TO SWIVEL PORT 3
ART_1001173136_4OF6

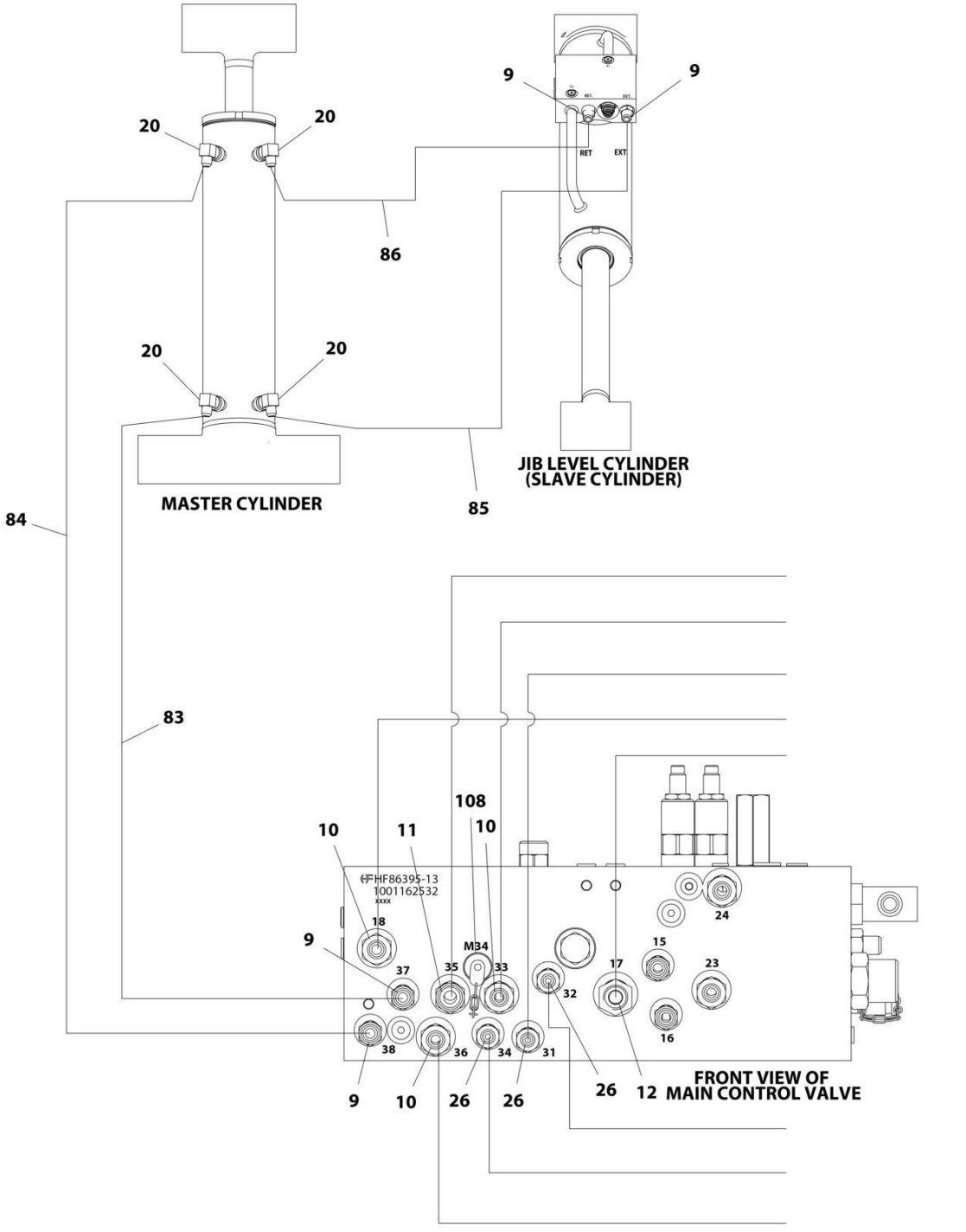
9
9
20
20
RET
EXT
86
20
20
JIB LEVEL CYLINDER
(SLAVE CYLINDER)
MASTER CYLINDER
85
84
83
108
10
11
10
(FHF86395-13
1001162532
xxxx
18
9
M34
37
35
33
17
15
23
24
32
16
38
36
34
31
9
10
26
26
26
12
FRONT VIEW OF
MAIN CONTROL VALVE
ART_1001173136_5OF6

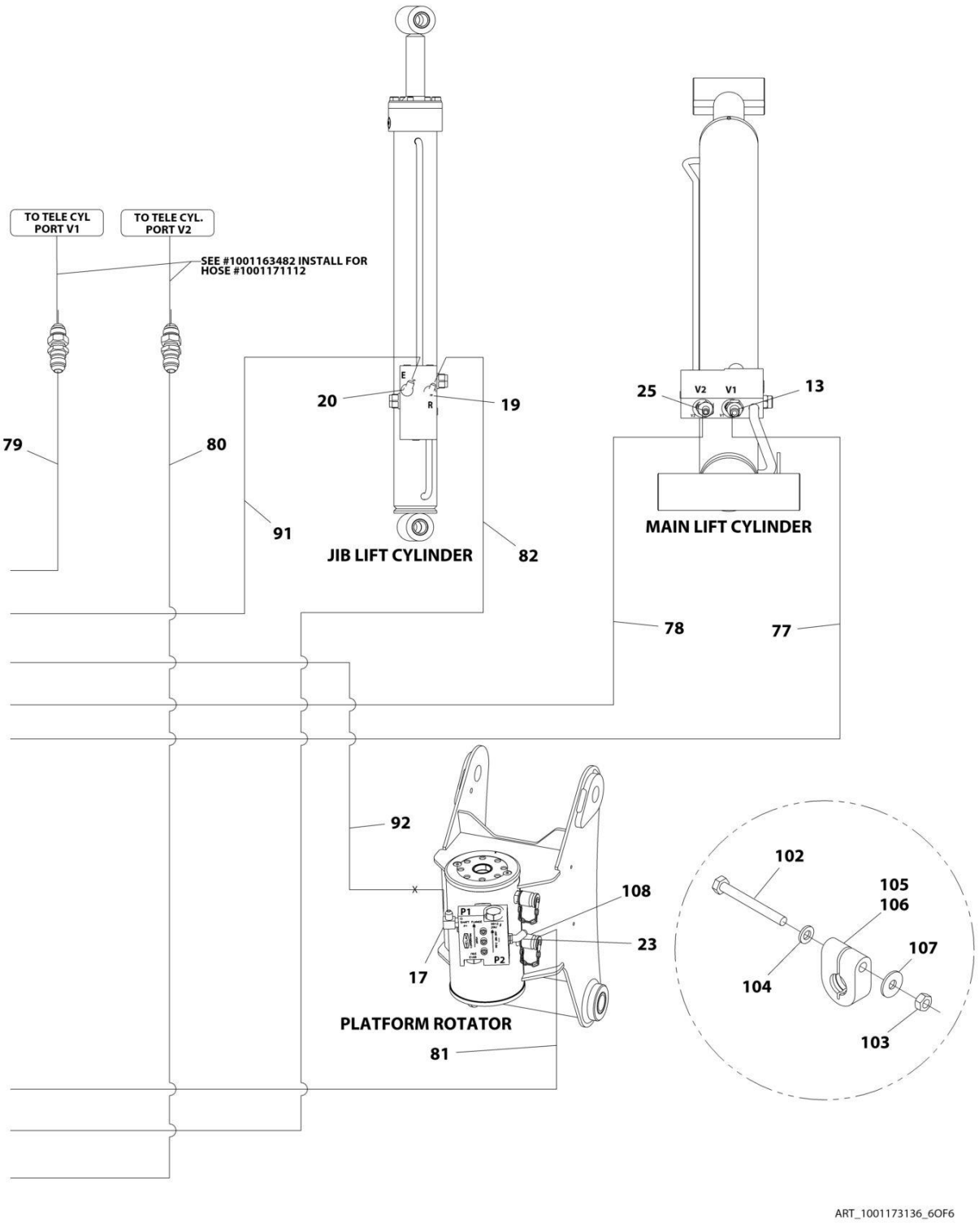
TO TELE CYL PORT V1
TO TELE CYL. PORT V2
SEE #1001163482 INSTALL FOR HOSE #1001171112
79
80
91
20
19
E
R
JIB LIFT CYLINDER
82
25
V2
V1
13
MAIN LIFT CYLINDER
78
77
92
108
23
17
P1
P2
PLATFORM ROTATOR
81
102
105
106
107
104
103
ART_1001173136_6OF6

FIGURE 7-11. 460SJ 4WD HYDRAULIC SYSTEM INSTALLATION (ALL MACHINES) (SN 0300214506 through 0300220609)

ITEM	PART NUMBER	QTY	DESCRIPTION	REV
	1001173136	Ref	460SJ 4WD HYDRAULIC SYSTEM INSTALLATION	K
1	2110810	8	Fitting, Straight ORFS/ORB	
2	2110812	8	Fitting, Straight ORFS/ORB	
3	2111216	5	Fitting, Straight ORFS/ORB	
4	2131212	AR	Fitting, 90 ORFS/ORB	
5	2131216	1	Fitting, 90 ORFS/ORB	
7	2220365	1	Fitting, 45 JIC/ORB	
8	2220366	2	Fitting, 90 JIC/ORB	
9	2220371	12	Fitting, Straight JIC/ORB	
10	2220372	9	Fitting, Straight JIC/ORB	
11	2220373	3	Fitting, Straight JIC/ORB	
12	2220374	2	Fitting, Straight JIC/ORB	
13	2220375	2	Fitting, Straight JIC/ORB	
14	2220377	1	Fitting, Straight JIC/ORB	
15	2220415	2	Fitting, Straight JIC/ORB	
16	2220451	1	Fitting, Straight JIC/ORB	
17	2220466	3	Fitting, 90 JIC/ORB	
18	2220468	2	Fitting, Straight JIC/ORB	
19	2220472	1	Fitting, 90 JIC/ORB	
20	2220473	9	Fitting, 90 JIC/ORB	
21	2220500	4	Fitting, 45 JIC/ORB	
22	2220501	2	Fitting, 45 JIC/ORB	
23	2220502	1	Fitting, 45 JIC/ORB	
25	2220577	1	Fitting, Straight JIC/ORB	
26	2220582	4	Fitting, Straight JIC/ORB	
27	2220596	2	Fitting, 90 JIC/ORB	
28	2220600	2	Fitting, Straight JIC/ORB	
29	1001197272	1	Fitting, Tee JIC/ORB/JIC	
31	2220622	AR	Fitting, Straight JIC/FSJIC	
32	2220628	1	Fitting, 90 JIC/ORB	
34	2220695	1	Fitting, Tee JIC/ORB/JIC	
35	2220726	1	Fitting, 90 JIC/ORB	
36	2220775	1	Fitting, 90 JIC/ORB	
37	1001175024	1	Fitting, Tee JIC/JIC/ORB	
38	2220906	1	Fitting, 90 JIC/ORB	
39	2220923	2	Fitting, Straight JIC/ORB	
40	2220946	2	Fitting, Straight JIC/ORB	
41	2220947	2	Fitting, Straight JIC/ORB	
42	2220998	2	Fitting, Straight JIC/ORB	
43	4240018	22	Tie-Strap	
44	80633030	2	Clamp	
45	88662037	AR	Fitting, Straight JIC/ORB	
46	1001098928	1	Clamp	
47	1001172692	2	Hose	
48	1001172695	2	Hose	
49	1001172697	4	Hose	
50	1001172698	2	Hose	
51	1001172699	2	Hose	
52	1001197284	1	Hose	

ITEM	PART NUMBER	QTY	DESCRIPTION	REV
55	1001172703	2	Hose	
59	1001172707	2	Hose	
64	1001172713	1	Hose	
65	1001172715	1	Hose	
66	1001172716	1	Hose	
67	1001172717	1	Hose	
68	1001172718	1	Hose	
69	1001172719	1	Hose	
70	1001172720	1	Hose	
71	1001172721	1	Hose	
72	1001172722	2	Hose	
73	1001172723	3	Hose	
74	1001173898	1	Hose	
75	1001173899	1	Hose	
76	1001173900	2	Hose	
77	1001173901	1	Hose	
78	1001173902	1	Hose	
79	1001173903	1	Hose	
80	1001173904	1	Hose	
81	1001173905	1	Hose	
82	1001173906	1	Hose	
83	1001173907	1	Hose	
84	1001173908	1	Hose	
85	1001173909	1	Hose	
86	1001173937	1	Hose	
87	1001173938	1	Hose	
88	1001181073	1	Hose	
89	1001181074	1	Hose	
90	1001181075	1	Hose	
91	1001181076	1	Hose	
92	1001181077	1	Hose	
97	1001184542	1	Hose	
98	1001184543	1	Hose	
99	1001184561	1	Hose	
100	1001184562	1	Hose	
101	1001184563	1	Hose	
102	0700619	2	Bolt, M6 x 55	
103	3290601	2	Nut, M6 x 1	
104	4811700	2	Washer, M6	
105	1001191275	1	Clamp	
106	1001191276	1	Clamp	
107	4811702	2	Washer, M6	
108	2221086	4	Fitting, Diagnostic Test Port	
109	2221040	2	Fitting, 45 JIC/ORB	

FIGURE 7-12. 460SJ 4WD HYDRAULIC SYSTEM INSTALLATION (ALL MACHINES) (SN 0300220610 through 0300272360, SN E300000100 through E300007988, SN 1300007289 through 1300007393)

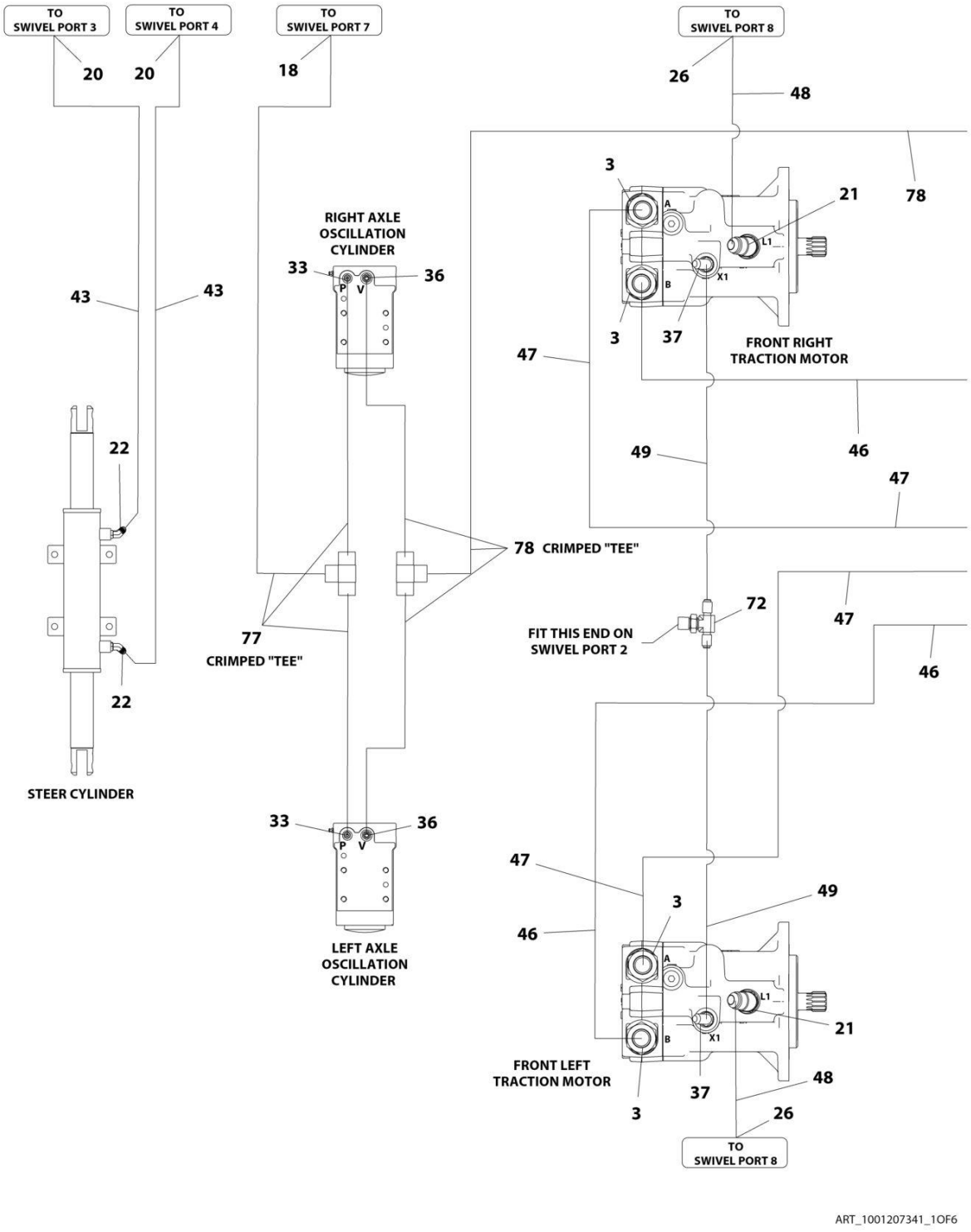

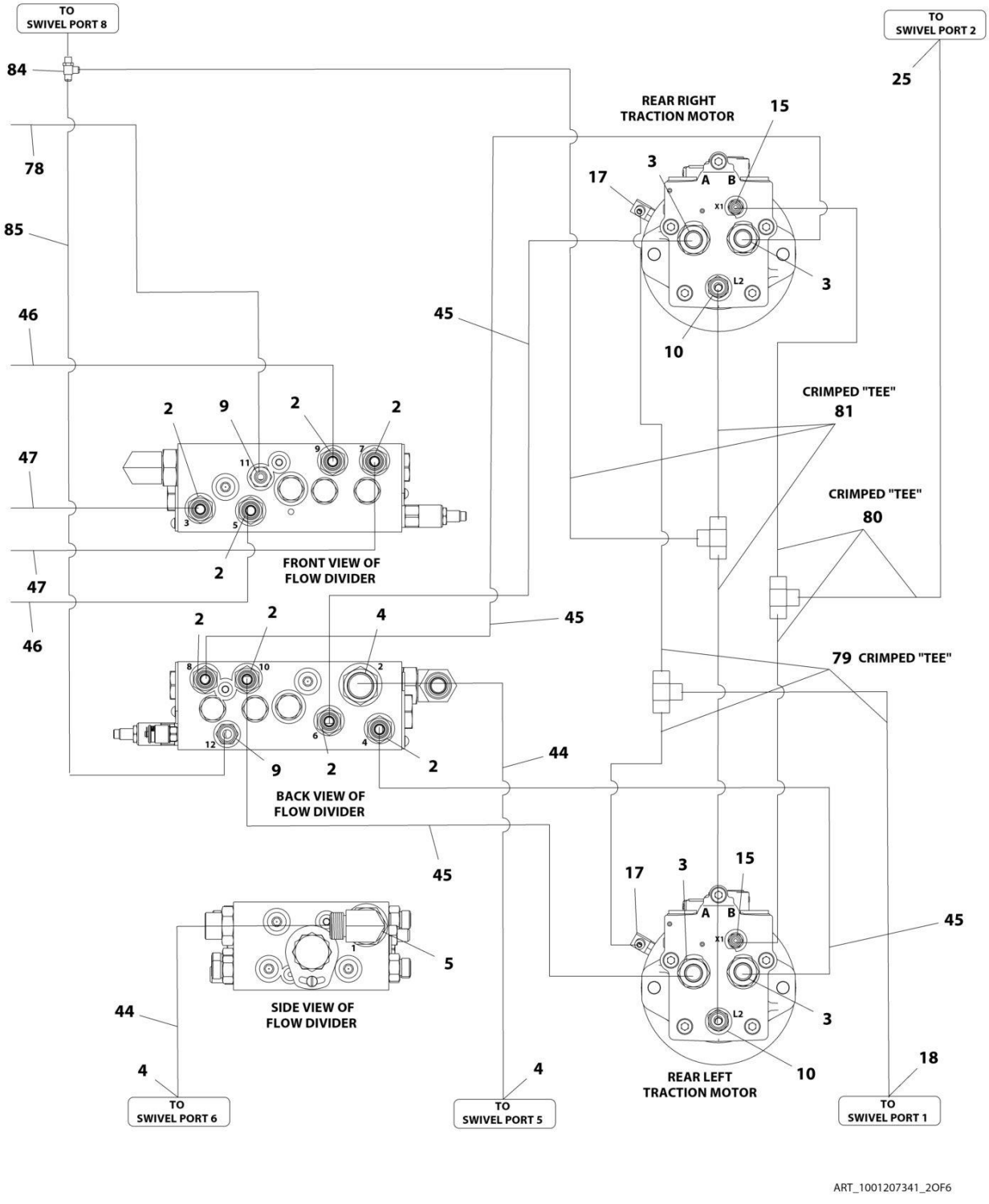
TO SWIVEL PORT 8
TO SWIVEL PORT 2
84
25
REAR RIGHT TRACTION MOTOR
15
78
3
17
A
B
X1
85
L2
3
46
45
10
CRIMPED "TEE"
81
2
9
2
2
47
CRIMPED "TEE"
80
FRONT VIEW OF FLOW DIVIDER
47
2
46
2
2
4
45
79 CRIMPED "TEE"
44
9
2
2
BACK VIEW OF FLOW DIVIDER
45
17
3
15
45
5
SIDE VIEW OF FLOW DIVIDER
44
3
4
4
18
10
REAR LEFT TRACTION MOTOR
TO SWIVEL PORT 6
TO SWIVEL PORT 5
TO SWIVEL PORT 1
ART_1001207341_2OF6

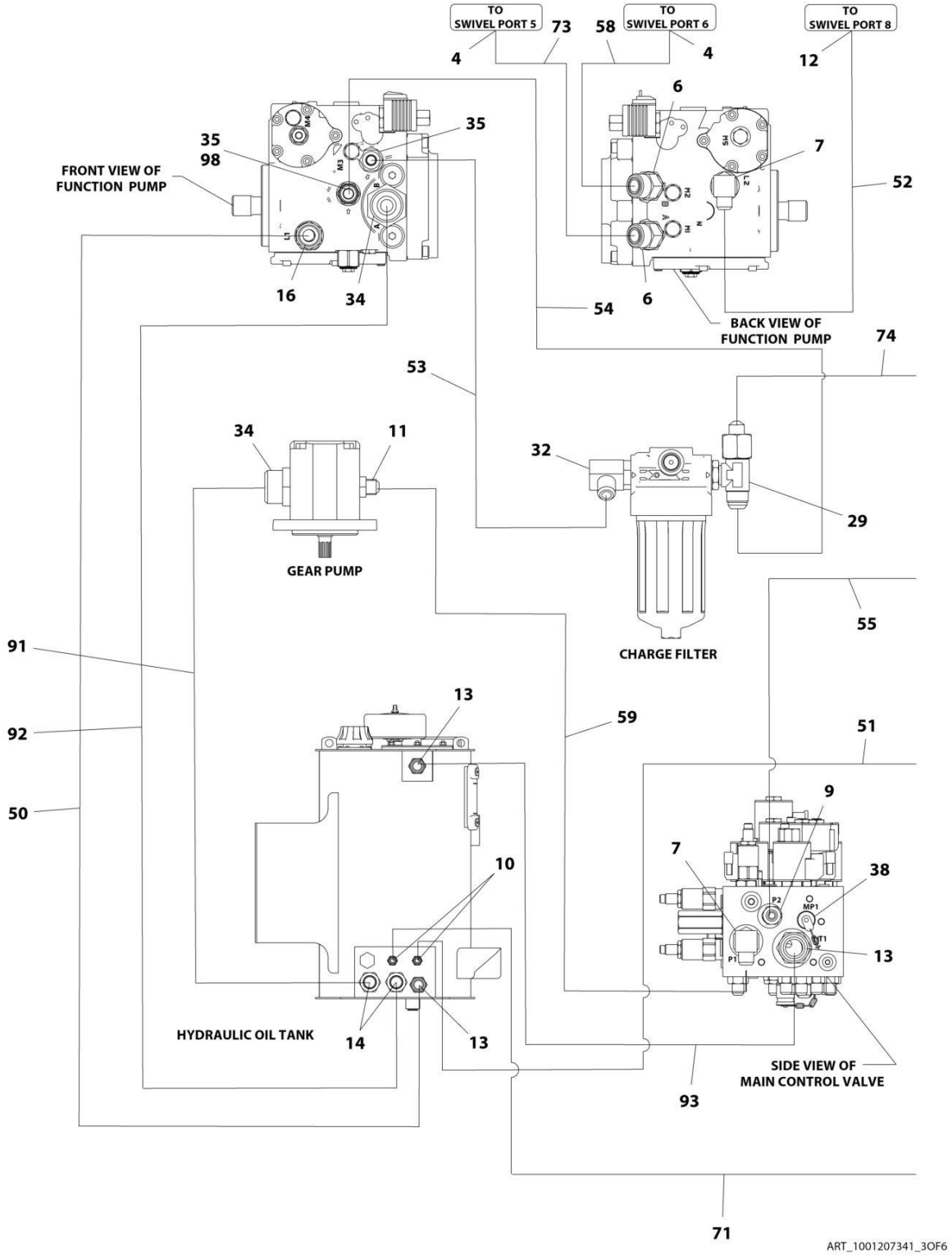
TO SWIVEL PORT 5
TO SWIVEL PORT 6
TO SWIVEL PORT 8
4
73
58
4
12
6
7
52
35
98
35
FRONT VIEW OF FUNCTION PUMP
16
34
54
6
BACK VIEW OF FUNCTION PUMP
74
53
34
11
32
29
GEAR PUMP
CHARGE FILTER
55
91
92
50
13
59
51
9
7
38
10
13
HYDRAULIC OIL TANK
14
13
SIDE VIEW OF MAIN CONTROL VALVE
93
71
ART_1001207341_3OF6

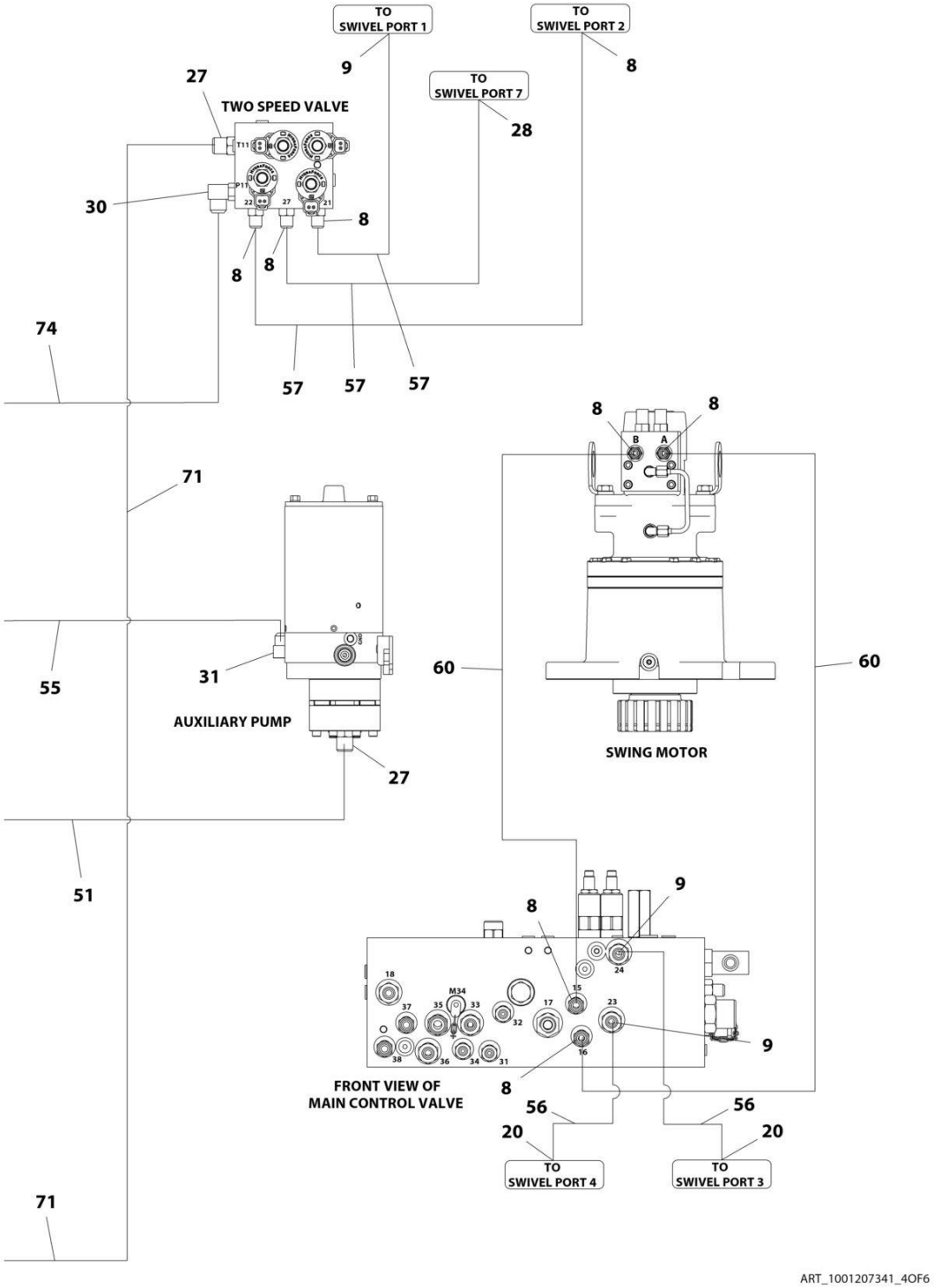
TO SWIVEL PORT 1
TO SWIVEL PORT 2
TO SWIVEL PORT 7
TWO SPEED VALVE
AUXILIARY PUMP
SWING MOTOR
FRONT VIEW OF MAIN CONTROL VALVE
TO SWIVEL PORT 4
TO SWIVEL PORT 3
ART_1001207341_4OF6

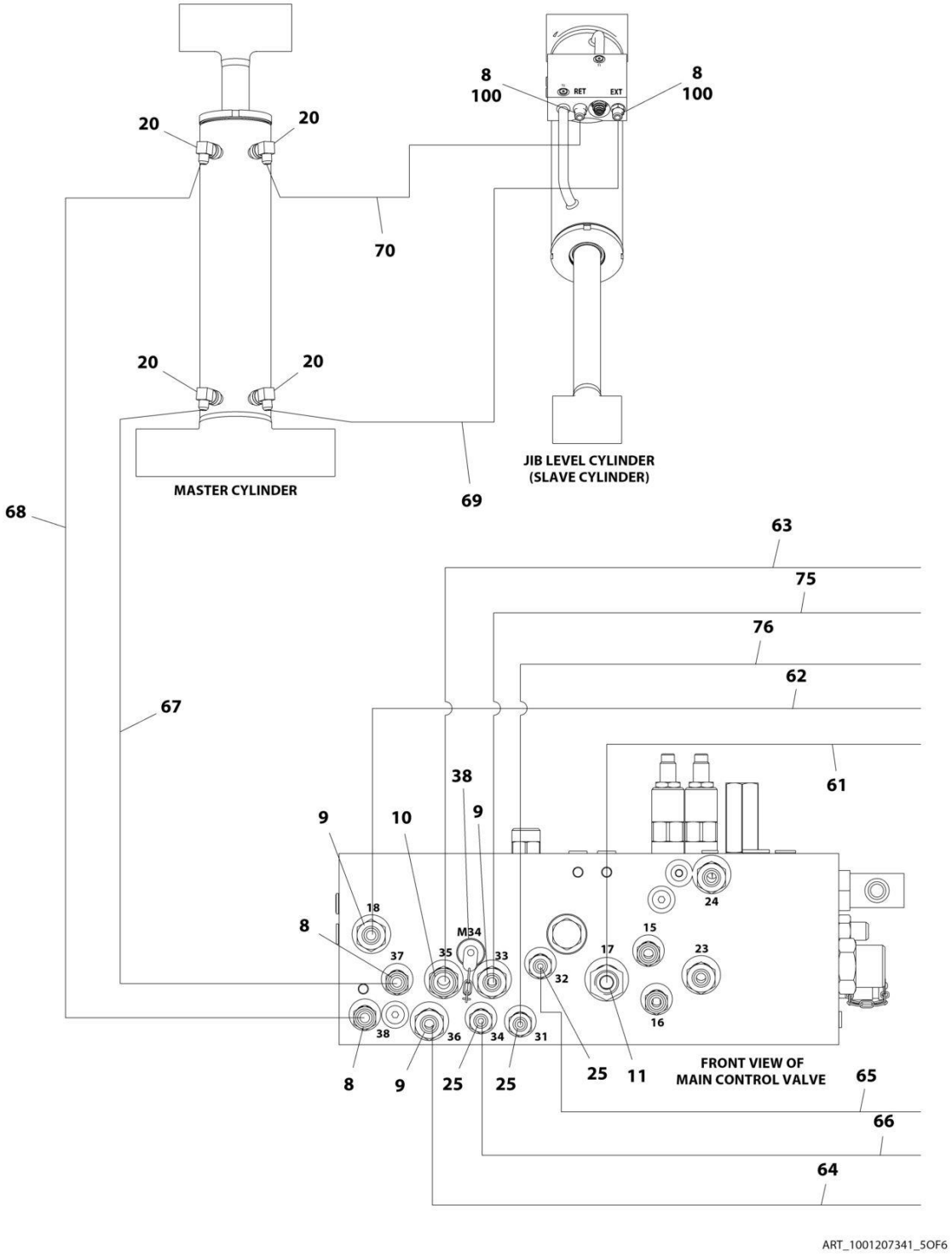
8
100
8
100
RET
EXT
20
20
70
20
20
MASTER CYLINDER
JIB LEVEL CYLINDER
(SLAVE CYLINDER)
69
68
63
75
76
62
67
61
38
9
10
9
18
8
M34
37
35
33
32
17
15
23
24
16
38
36
34
31
8
9
25
25
25
11
FRONT VIEW OF
MAIN CONTROL VALVE
65
66
64
ART_1001207341_5OF6

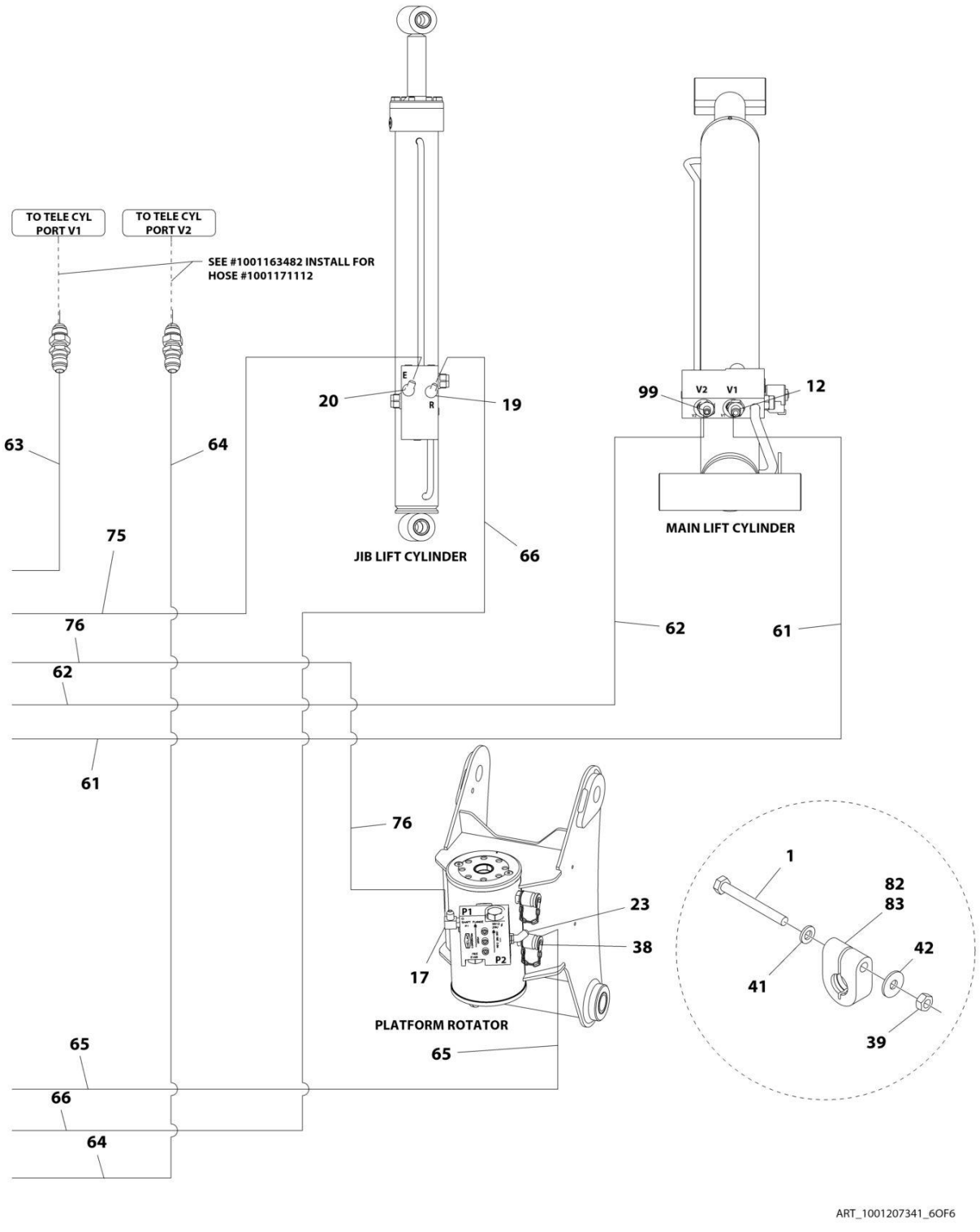

ART_1001207341_6OF6

FIGURE 7-12. 460SJ 4WD HYDRAULIC SYSTEM INSTALLATION (ALL MACHINES) (SN 0300220610 through 0300272360, SN E300000100 through E300007988, SN 1300007289 through 1300007393)

ITEM	PART NUMBER	QTY	DESCRIPTION	REV
	1001207341	Ref	460SJ 4WD HYDRAULIC SYSTEM INSTALLATION	F
1	0760619	2	Bolt, M6 x 55	
2	2110810	8	Fitting, Straight ORFS/ORB	
3	2110812	8	Fitting, Straight ORFS/ORB	
4	2111216	5	Fitting, Straight ORFS/ORB	
5	2131216	1	Fitting, 90 ORFS/ORB	
6	2131212	2	Fitting, 90 ORFS/ORB	
7	2220366	2	Fitting, 90 JIC/ORB	
8	2220371	AR	Fitting, Straight JIC/ORB	
9	2220372	9	Fitting, Straight JIC/ORB	
10	2220373	5	Fitting, Straight JIC/ORB	
11	2220374	AR	Fitting, Straight JIC/ORB	
12	2220375	AR	Fitting, Straight JIC/ORB	
13	2220377	3	Fitting, Straight JIC/ORB	
14	1001202910	2	Fitting, Straight MORB	
15	2220415	2	Fitting, Straight JIC/ORB	
16	2220451	1	Fitting, Straight JIC/ORB	
17	2220466	3	Fitting, 90 JIC/ORB	
18	2220468	2	Fitting, Straight JIC/ORB	
19	2220472	1	Fitting, 90 JIC/ORB	
20	2220473	9	Fitting, 90 JIC/ORB	
21	2220500	2	Fitting, 45 JIC/ORB	
22	2220501	2	Fitting, 45 JIC/ORB	
23	2220502	1	Fitting, 45 JIC/ORB	
24	2220577	1	Fitting, Straight JIC/ORB (Not Shown) **(SN 0300220610 through 0300226846)**	
25	2220582	4	Fitting, Straight JIC/ORB	
26	2220596	2	Fitting, 90 JIC/ORB	
27	2220600	2	Fitting, Straight JIC/ORB	
28	2220628	1	Fitting, 90 JIC/ORB	
29	2220695	1	Fitting, Tee JIC/ORB/JIC	
30	2220726	1	Fitting, 90 JIC/ORB	
31	2220775	1	Fitting, 90 JIC/ORB	
32	2220906	1	Fitting, 90 JIC/ORB	
33	2220923	2	Fitting, Straight JIC/ORB	
34	2220946	2	Fitting, Straight JIC/ORB	
35	2220947	AR	Fitting, Straight JIC/ORB	
36	2220998	2	Fitting, Straight JIC/ORB	
37	2221040	2	Fitting, 45 JIC/ORB	
38	2221086	4	Fitting, Diagnostic Test Port	
39	3290601	2	Nut, M6 x 1	
40	4240018	22	Tie-Strap (Not Shown)	
41	4811700	2	Washer, M6	
42	4811702	2	Washer, M6	
43	1001172692	2	Hose	
44	1001172695	1	Hose	
45	1001172697	4	Hose	
46	1001172698	2	Hose	
47	1001172699	2	Hose	

ITEM	PART NUMBER	QTY	DESCRIPTION	REV
48	1001172703	2	Hose	
49	1001172707	2	Hose	
50	1001216655	1	Hose	
51	1001172716	1	Hose	
52	1001172717	1	Hose	
53	1001172718	1	Hose	
54	1001172719	1	Hose	
55	1001172721	1	Hose	
56	1001172722	2	Hose	
57	1001172723	3	Hose	
58	1001173898	1	Hose	
59	1001173899	1	Hose **(SN 0300220610 through 0300222808)**	
59	2752500	1	Hose **(SN 0300222809 through 0300272360, SN E300000100 through E300007988, SN 1300007289 through 1300007393, Except SN 0300272174 through 0300272184, Excluding E300007847)**	
60	1001173900	2	Hose	
61	1001173901	1	Hose	
62	1001173902	1	Hose	
63	1001173903	1	Hose	
64	1001173904	1	Hose	
65	1001173905	1	Hose	
66	1001173906	1	Hose	
67	1001173907	1	Hose	
68	1001173908	1	Hose	
69	1001173909	1	Hose	
70	1001173937	1	Hose	
71	1001193654	1	Hose	
72	1001175024	1	Fitting, Tee JIC/JIC/ORB	
73	1001181074	1	Hose	
74	1001181075	1	Hose	
75	1001181076	1	Hose	
76	1001181077	1	Hose	
77	1001184542	1	Hose	
78	1001184543	1	Hose	
79	1001184561	1	Hose	
80	1001184562	1	Hose	
81	1001184563	1	Hose	
82	1001191275	1	Clamp	
83	1001191276	1	Clamp	
84	1001197272	1	Fitting, Tee JIC/ORB/JIC	
85	1001197284	1	Hose	
91	1001207331	1	Hose **(SN 0300220610 through 0300222808)**	
91	1001172713	1	Hose **(SN 0300222809 through 0300226923)**	
91	1001207332	1	Hose **(SN 0300226924 through 0300272360, SN E300000100 through E300007988, SN 1300007289 through 1300007393, Except SN 0300272174 through 0300272184, Excluding E300007847)**	
92	1001207332	1	Hose	
93	1001207333	1	Hose	
97	80633030	2	Clamp (Not Shown)	
98	88662037	1	Fitting, Straight JIC/ORB **(SN 0300222809 through 0300272360, SN E300000100 through E300007988, SN 1300007289 through**	

ITEM	PART NUMBER	QTY	DESCRIPTION	REV
			1300007393, Except SN 0300272174 through 0300272184, Excluding E300007847)	
99	2220497	1	Fitting, Straight JIC/ORB **(SN 0300226847 through 0300272360, SN E300000100 through E300007988, SN 1300007289 through 1300007393, Except SN 0300272174 through 0300272184, Excluding E300007847)**	
100	2220603	AR	Fitting, Straight JIC/ORB **(SN 0300247698 through 0300272360, Except SN 0300272174 through 0300272184)**	

FIGURE 7-13. HYDRAULIC DIAGRAM LIST

ITEM	PART NUMBER	QTY	DESCRIPTION	REV
		Ref	HYDRAULIC DIAGRAM LIST	
	1001214165	Ref	HYDRAULIC SYSTEM INSTALLATION - 400S 2WD **(SN 0300203771 through 0300220609)**	
	1001216801	Ref	HYDRAULIC SYSTEM INSTALLATION - 400S 2WD **(SN 0300220610 through 0300272360, Except SN 0300272174 through 0300272184)**	
	1001173135	Ref	HYDRAULIC SYSTEM INSTALLATION - 400S 4WD (WITHOUT ARCTIC PACKAGE) **(SN 0300203771 through 0300214505)**	
	1001178498	Ref	HYDRAULIC SYSTEM INSTALLATION - 400S 4WD (WITH ARCTIC PACKAGE) **(SN 0300203771 through 0300214505)**	
	1001173135	Ref	HYDRAULIC SYSTEM INSTALLATION - 400S 4WD (ALL MACHINES) **(SN 0300214506 through 0300220609)**	
	1001207340	Ref	HYDRAULIC SYSTEM INSTALLATION - 400S 4WD (ALL MACHINES) **(SN 0300220610 through 0300272360, SN E300000100 through E300007988, SN 1300007289 through 1300007393, Except SN 0300272174 through 0300272184, Excluding E300007847)**	
	1001214166	Ref	HYDRAULIC SYSTEM INSTALLATION - 460SJ 2WD **(SN 0300203771 through 0300220609)**	
	1001216801	Ref	HYDRAULIC SYSTEM INSTALLATION - 460SJ 2WD **(SN 0300220610 through 0300272360, Except SN 0300272174 through 0300272184)**	
	1001173136	Ref	HYDRAULIC SYSTEM INSTALLATION - 460SJ 4WD (WITHOUT ARCTIC PACKAGE) **(SN 0300203771 through 0300214505)**	
	1001178499	Ref	HYDRAULIC SYSTEM INSTALLATION - 460SJ 4WD (WITH ARCTIC PACKAGE) **(SN 0300203771 through 0300214505)**	
	1001173136	Ref	HYDRAULIC SYSTEM INSTALLATION - 460SJ 4WD (ALL MACHINES) **(SN 0300214506 through 0300220609)**	
	1001207341	Ref	HYDRAULIC SYSTEM INSTALLATION - 460SJ 4WD (ALL MACHINES) **(SN 0300220610 through 0300272360, SN E300000100 through E300007988, SN 1300007289 through 1300007393, Except SN 0300272174 through 0300272184, Excluding E300007847)**	
	1001178276	Ref	HYDRAULIC SCHEMATIC (Not Shown - See Service Manual)	

SECTION 8 - ELECTRICAL

FIGURE 8-1. ELECTRICAL DIAGRAM LIST

ITEM	PART NUMBER	QTY	DESCRIPTION	REV
		Ref	Note: Diagrams not shown are available from the JLG Service Department. Schematics shown in the Service and Maintenance Manual.	
		Ref	ELECTRICAL DIAGRAM LIST	
	1001165354	Ref	Electrical Schematic - 400S/460SJ	
	1001188731	Ref	Generator Electrical Diagram - 2500W Generator - 60Hz (Deutz & GM Engines) (ANSI, ANSI Export and CSA Specs)	
	1001188732	Ref	Generator Electrical Diagram - 2500W Generator - 50Hz (Deutz Engines) (ANSI Export Specs)	
	1001175632	Ref	Generator Electrical Diagram - 4000W Generator - 50Hz (ANSI Export Specs) **(SN 0300203771 through 0300208696)**	
	1001175632	Ref	Generator Electrical Diagram - 4000W Generator - 50Hz (CE Specs)	
	1001197998	Ref	Generator Electrical Diagram - 4000W Generator - 50Hz (ANSI Export Specs) **(SN 0300208697 through 0300272360, Except SN 0300272174 through 0300272184)**	
	1001175634	Ref	Generator Electrical Diagram - 4000W Generator - 50Hz (Australian Specs)	
	1001175633	Ref	Generator Electrical Diagram - 4000W Generator - 50Hz (UK Specs)	
	1001175631	Ref	Generator Electrical Diagram - 4000W Generator - 60Hz (ANSI, ANSI Export and CSA Specs) **(SN 0300203771 through 0300208696)**	
	1001174675	Ref	Generator Electrical Diagram - 7500W SkyPower Generator	
	4933218	Ref	Soft Touch Electrical Diagram	

FIGURE 8-2. AC BOX AT PLATFORM INSTALLATION - 110V (ANSI, ANSI EXPORT, CSA AND CHINA SPECS)

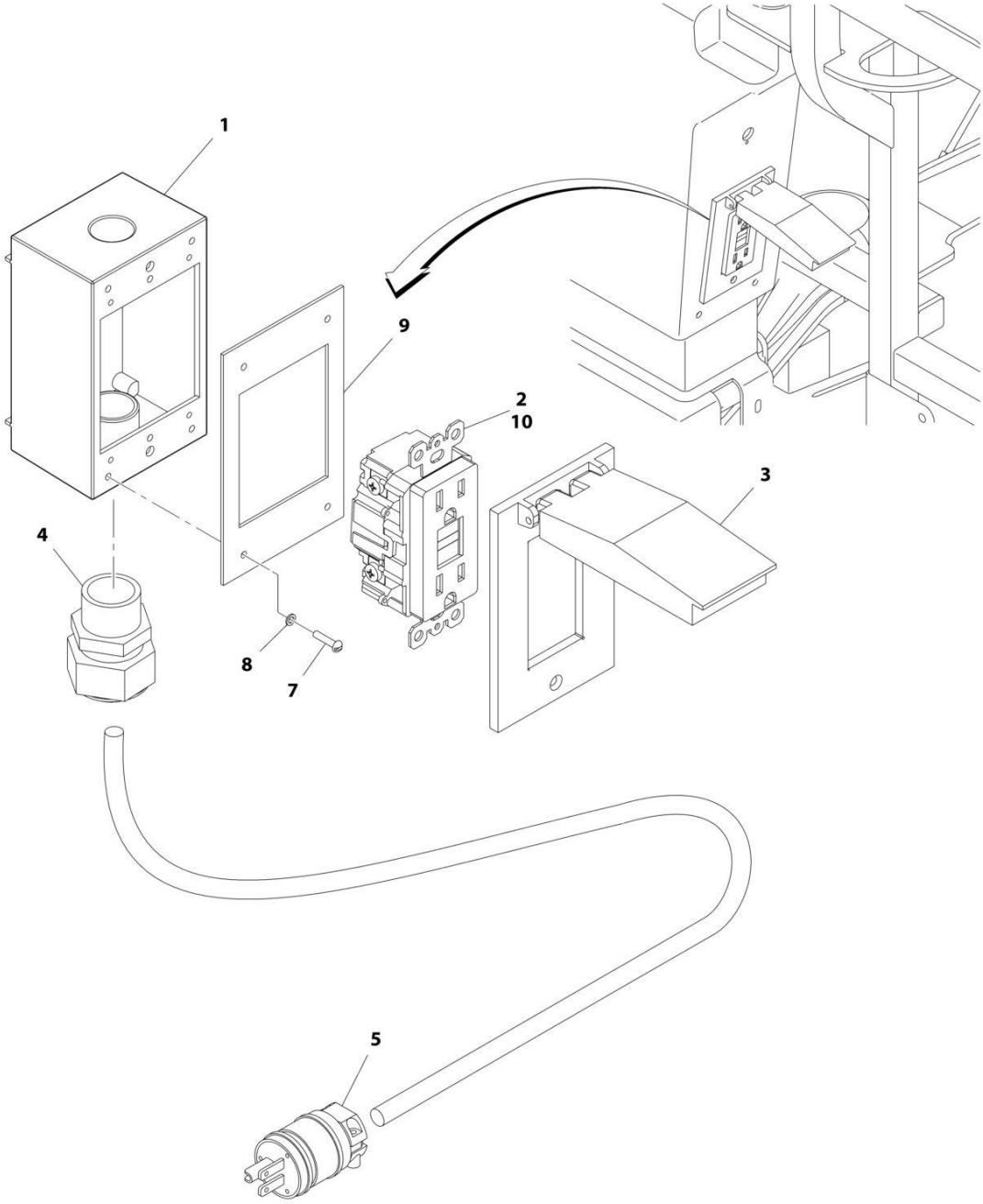

FIGURE 8-2. AC BOX AT PLATFORM INSTALLATION - 110V (ANSI, ANSI EXPORT, CSA AND CHINA SPECS)

ITEM	PART NUMBER	QTY	DESCRIPTION	REV
	0270022	Ref	AC BOX AT PLATFORM INSTALLATION - 110V (ANSI, ANSI EXPORT, CSA AND CHINA SPECS)	4-B
1	0860038	1	Box, Switch	
2	4460346	1	Receptacle	
3	1001110873	1	Shield, Cover	
4	4460071	1	Connector, Strain Relief	
5	4460205	1	Plug, Male	
7	3910610	4	Screw #6 x 5/8	
8	4760600	4	Washer #6	
9	3960422	1	Gasket	
10	4460315	1	Terminal, Spade	

FIGURE 8-3. AC BOX AT PLATFORM INSTALLATION - 220V (ANSI, ANSI EXPORT AND CSA SPECS) (SN 0300203771 through 0300220609)

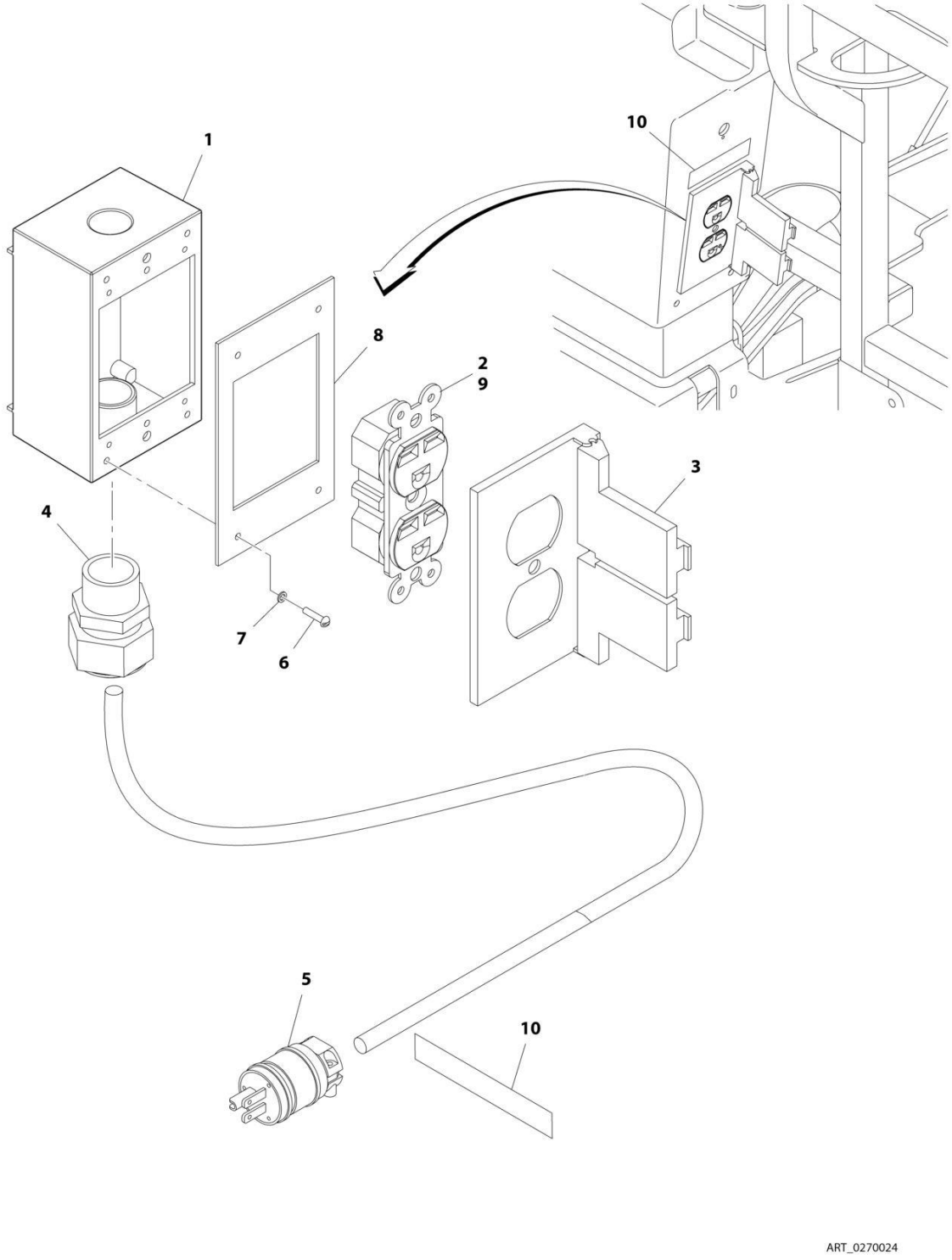

FIGURE 8-3. AC BOX AT PLATFORM INSTALLATION - 220V (ANSI, ANSI EXPORT AND CSA SPECS) (SN 0300203771 through 0300220609)

ITEM	PART NUMBER	QTY	DESCRIPTION	REV
	0270024	Ref	AC BOX AT PLATFORM INSTALLATION - 220V (ANSI, ANSI EXPORT AND CSA SPECS) **(SN 0300203771 through 0300220609)**	3-B
1	0860038	1	Box, Switch	
2	4460125	1	Receptacle	
3	4060092	1	Shield	
4	4460071	1	Connector, Strain Relief	
5	4460233	1	Plug, Male	
6	3910610	4	Screw #6 x 5/8	
7	4760600	4	Washer #6	
8	3960422	1	Gasket	
9	4460315	1	Terminal, Spade	
10	3252507	1	Decal - Voltage	

FIGURE 8-4. AC BOX AT PLATFORM - 110V IEC YELLOW (CE SPEC)

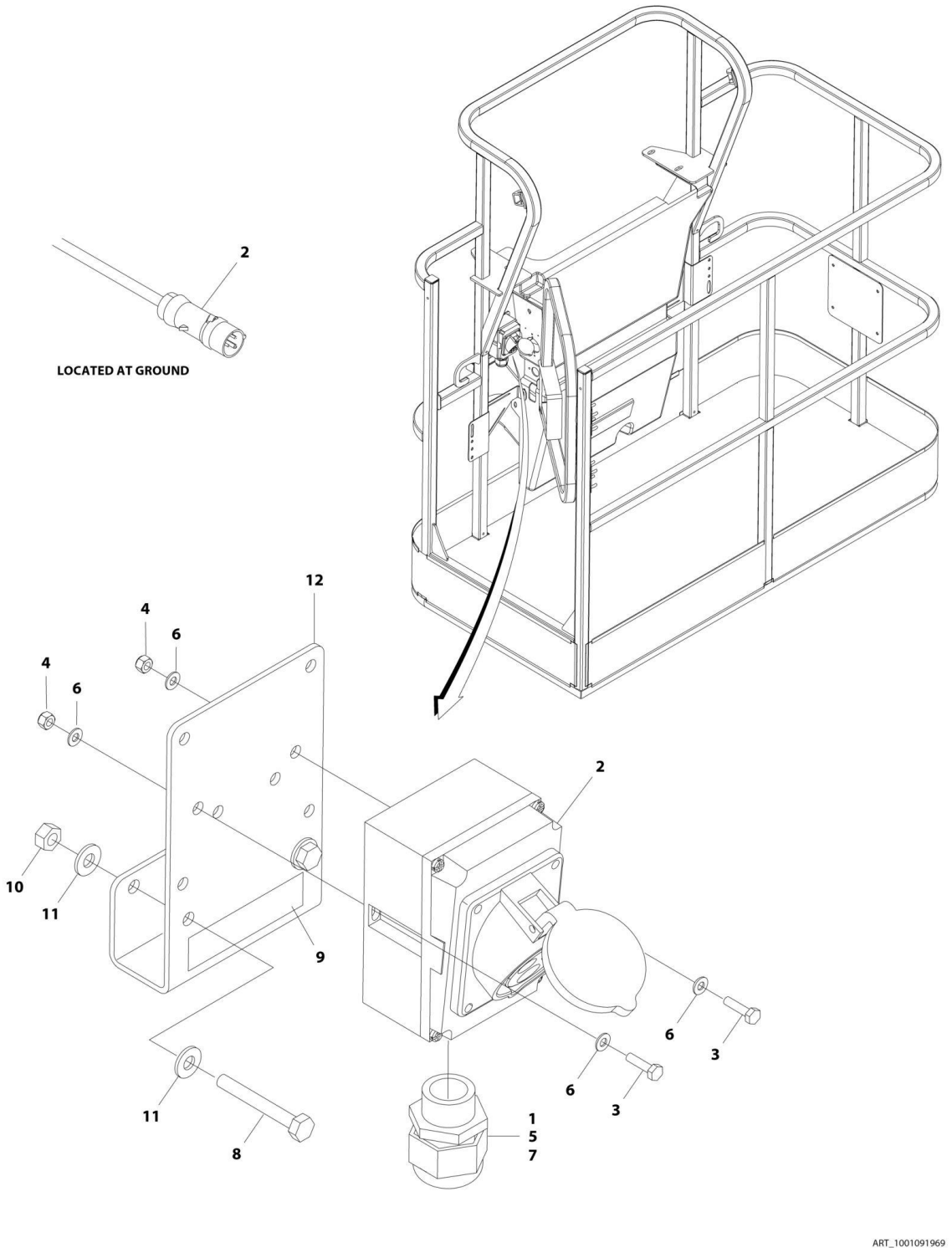

FIGURE 8-4. AC BOX AT PLATFORM - 110V IEC YELLOW (CE SPEC)

ITEM	PART NUMBER	QTY	DESCRIPTION	REV
	1001091969	Ref	AC BOX AT PLATFORM - 110V IEC YELLOW (CE SPEC)	D
1	0100020	AR	Sealant	
2	0275216	1	Receptacle Box Kit (See RECEPTACLE BOX KIT - 110V IEC YELLOW (CE SPEC) for Breakdown)	
3	0700408	2	Bolt M4 x 16	
4	3290405	2	Nut M4	
5	1001101196	1	Adapter	
6	4811400	4	Washer M4	
7	1001101191	1	Connector, Strain Relief	
8	0641416	2	Bolt 1/4 x 2	
9	1705325	2	Decal - 110V	
10	3311405	2	Nut 1/4	
11	4711400	4	Washer 1/4	
12	1001193018	1	Bracket	

FIGURE 8-5. AC BOX AT PLATFORM - 220V IEC BLUE (CE SPEC)

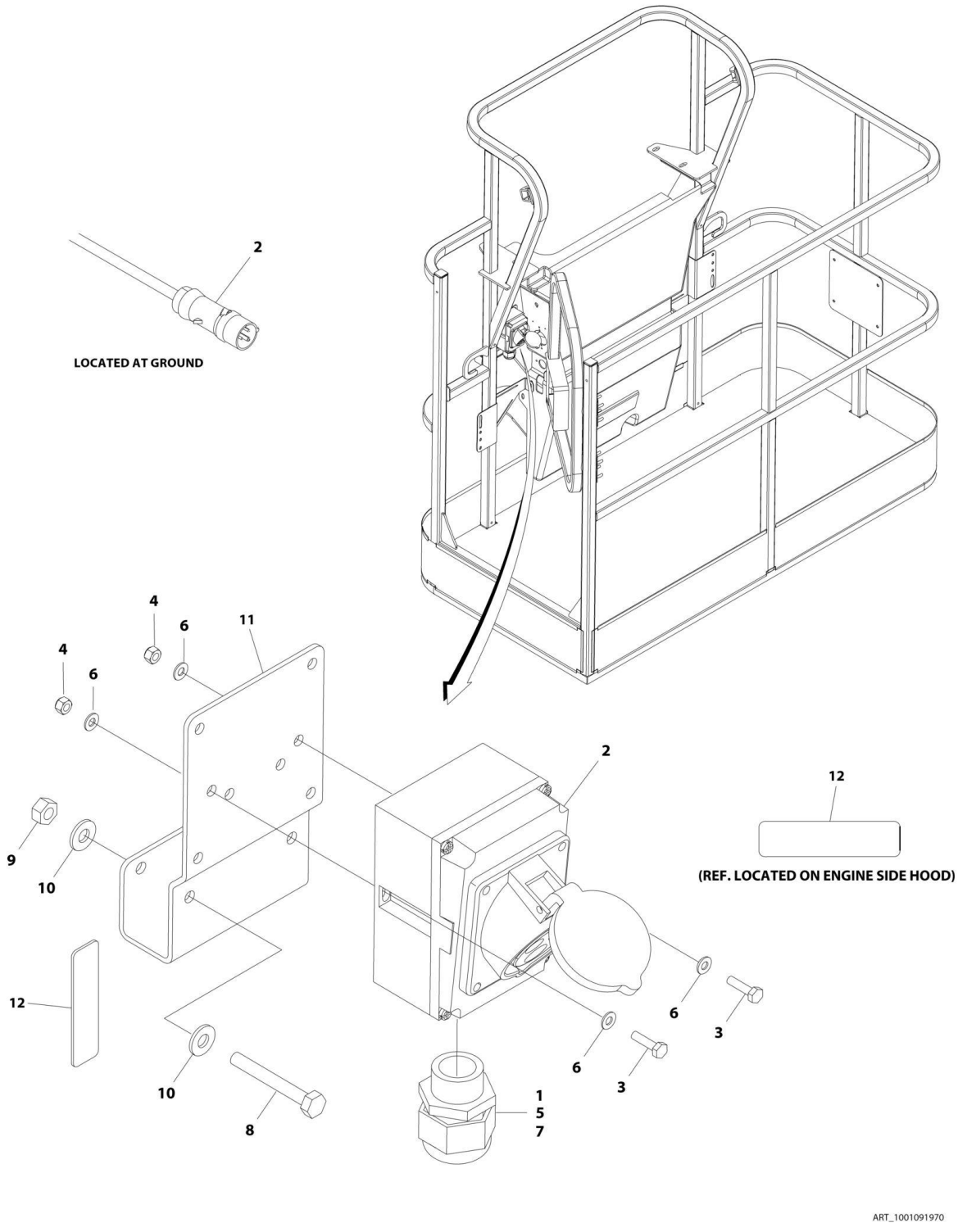

FIGURE 8-5. AC BOX AT PLATFORM - 220V IEC BLUE (CE SPEC)

ITEM	PART NUMBER	QTY	DESCRIPTION	REV
	1001091970	Ref	AC BOX AT PLATFORM - 220V IEC BLUE (CE SPEC)	D
1	0100020	AR	Sealant	
2	0275217	1	Receptacle Box Kit (See RECEPTACLE BOX KIT - 220V IEC BLUE (CE SPEC) for Breakdown)	
3	0700408	2	Bolt M4 x 16	
4	3290405	2	Nut M4	
5	1001101196	1	Adapter	
6	4811400	4	Washer M4	
7	1001101191	1	Connector, Strain Relief	
8	0641416	2	Bolt 1/4 x 2	
9	3311405	2	Nut 1/4	
10	4711400	4	Washer 1/4	
11	1001193018	1	Bracket	
12	3251242	2	Decal - 240V/50Hz	

FIGURE 8-6. AC BOX AT PLATFORM - 220V CEE7 70MM X 70MM POST GROUND (CE SPEC) (SN 0300203771 through 0300208696)

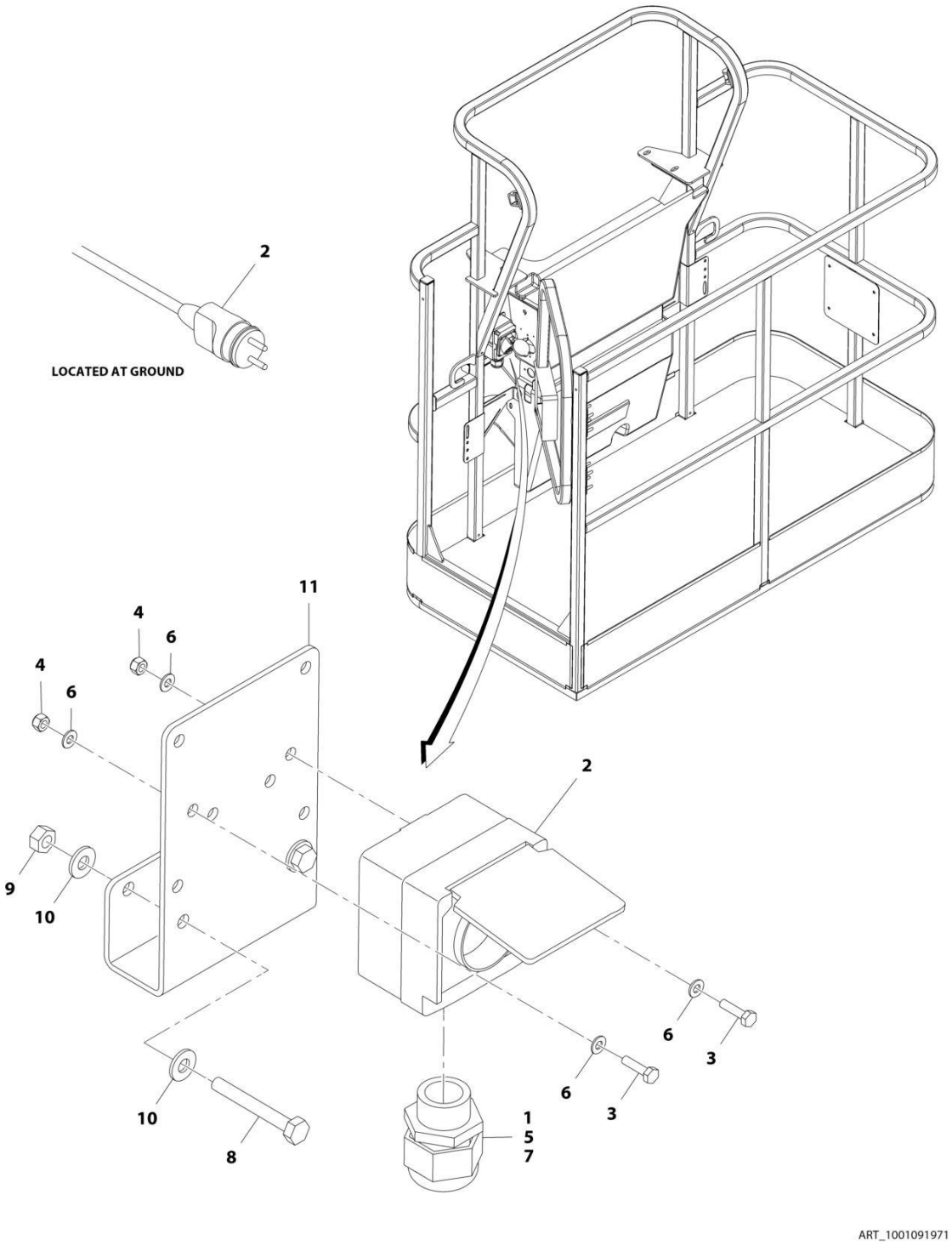

FIGURE 8-6. AC BOX AT PLATFORM - 220V CEE7 70MM X 70MM POST GROUND (CE SPEC) (SN 0300203771 through 0300208696)

ITEM	PART NUMBER	QTY	DESCRIPTION	REV
	1001091971	Ref	AC BOX AT PLATFORM - 220V CEE7 70MM X 70MM POST GROUND (CE SPEC) **(SN 0300203771 through 0300208696)**	C
1	0100020	AR	Sealant	
2	0275218	1	Receptacle Box Kit (See RECEPTACLE BOX KIT - 220V CEE7 70MM X 70MM POST GROUND (CE SPEC) for Breakdown)	
3	0700408	2	Bolt M4 x 16	
4	3290405	2	Nut M4	
5	1001101196	1	Adapter	
6	4811400	4	Washer M4	
7	1001101191	1	Connector, Strain Relief	
8	0641416	2	Bolt 1/4 x 2	
9	3311405	2	Nut 1/4	
10	4711400	4	Washer 1/4	
11	1001193018	1	Bracket	

FIGURE 8-7. AC BOX AT PLATFORM - 220V CEE7 2IN X 4IN POST GROUND (CE SPEC)

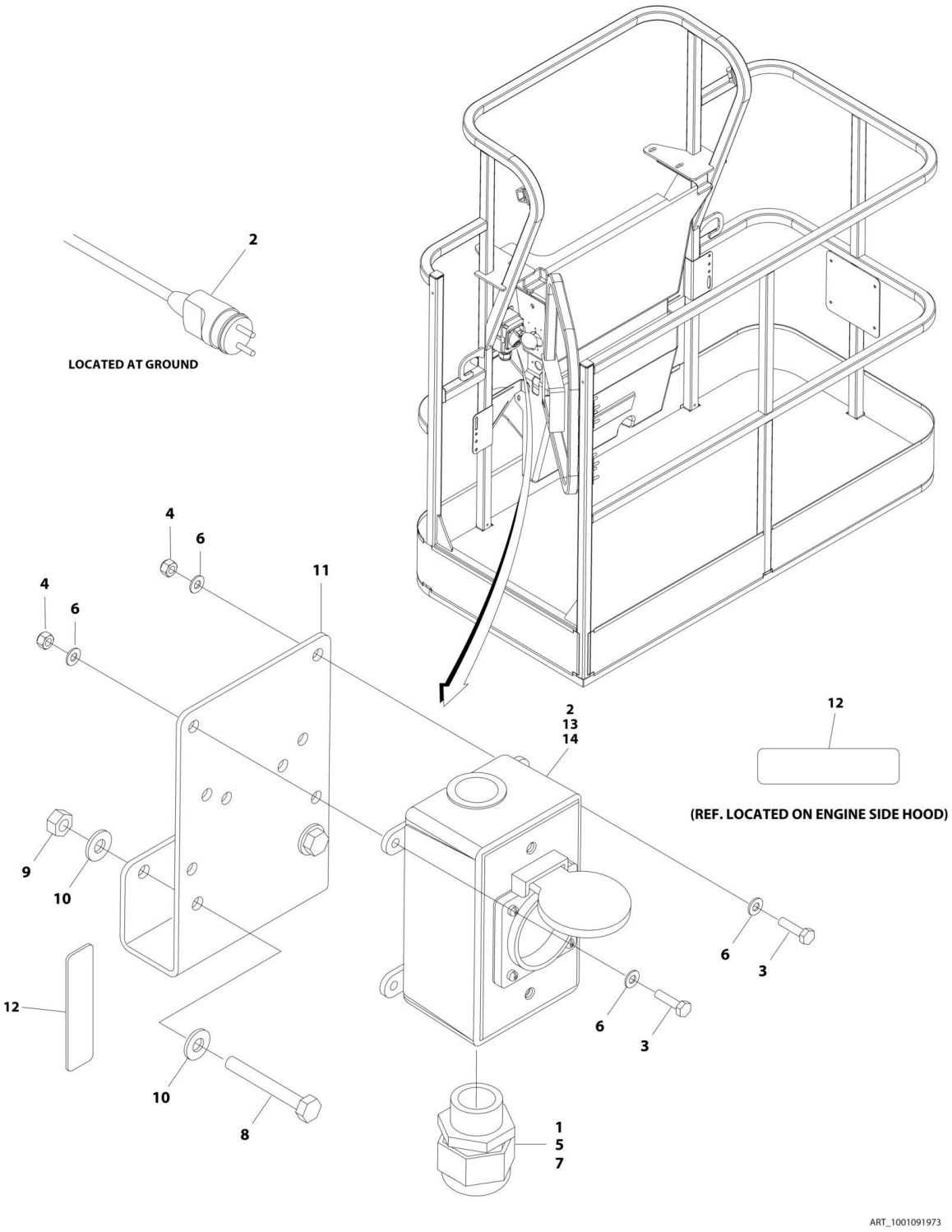

FIGURE 8-7. AC BOX AT PLATFORM - 220V CEE7 2IN X 4IN POST GROUND (CE SPEC)

ITEM	PART NUMBER	QTY	DESCRIPTION	REV
	1001091973	Ref	AC BOX AT PLATFORM - 220V CEE7 2IN X 4IN POST GROUND (CE SPEC)	F
1	0100020	AR	Sealant	
2	0275452	1	Receptacle Box Kit (See RECEPTACLE BOX KIT - 220V CEE7 POST GROUND 2IN X 4IN (CE SPEC) for Breakdown)	
3	0700408	4	Bolt M4 x 16	
4	3290405	4	Nut M4	
5	1001101196	1	Adapter	
6	4811400	8	Washer M4	
7	1001101191	1	Connector, Strain Relief	
8	0641416	2	Bolt 1/4 x 2	
9	3311405	2	Nut 1/4	
10	4711400	4	Washer 1/4	
11	1001193018	1	Bracket	
12	3251242	2	Decal, 240V/50HZ **(SN E3000004823 through E300007988, Excluding E300007847)**	
13	4460806	2	Terminal, Fork **(SN E3000005300 through E300007988, Excluding E300007847)**	
14	1001205958	1	Terminal, Wire Pin **(SN E3000005300 through E300007988, Excluding E300007847)**	

FIGURE 8-8. AC BOX AT PLATFORM - 220V CEE7 70MM X 70MM SIDE GROUND (CE SPEC) (SN 0300203771 through 0300208696)

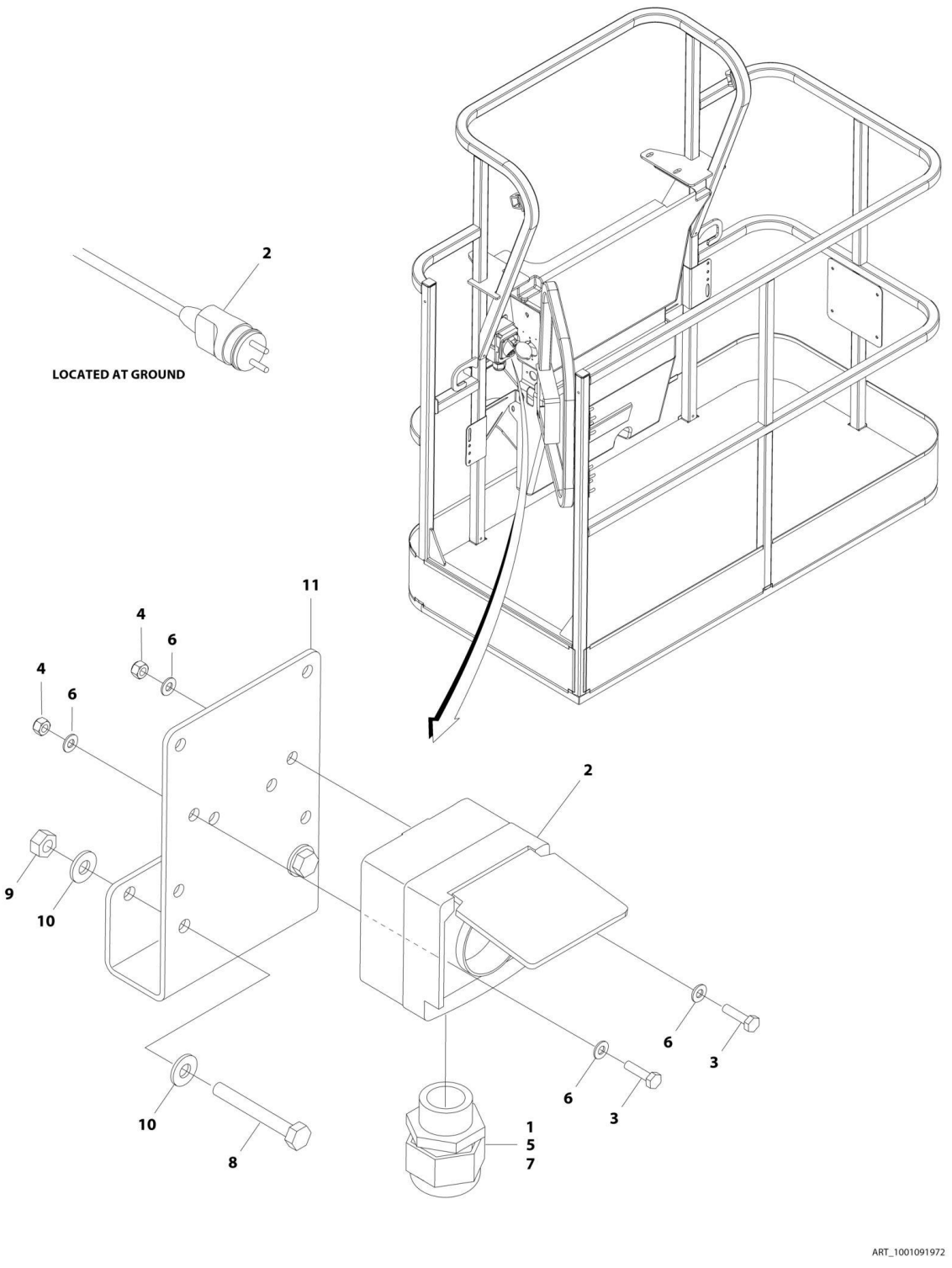

FIGURE 8-8. AC BOX AT PLATFORM - 220V CEE7 70MM X 70MM SIDE GROUND (CE SPEC) (SN 0300203771 through 0300208696)

ITEM	PART NUMBER	QTY	DESCRIPTION	REV
	1001091972	Ref	AC BOX AT PLATFORM - 220V CEE7 70MM X 70MM SIDE GROUND (CE SPEC) **(SN 0300203771 through 0300208696)**	C
1	0100020	AR	Sealant	
2	0275219	1	Receptacle Box Kit (See RECEPTACLE BOX KIT - 220V CEE7 70MM x 70MM SIDE GROUND (CE SPEC) for Breakdown)	
3	0700408	2	Bolt M4 x 16	
4	3290405	2	Nut M4	
5	1001101196	1	Adapter	
6	4811400	4	Washer M4	
7	1001101191	1	Connector, Strain Relief	
8	0641416	2	Bolt 1/4 x 2	
9	3311405	2	Nut 1/4	
10	4711400	4	Washer 1/4	
11	1001193018	1	Bracket	

FIGURE 8-9. AC BOX AT PLATFORM - 220V CEE7 2IN X 4IN SIDE GROUND (CE SPEC)

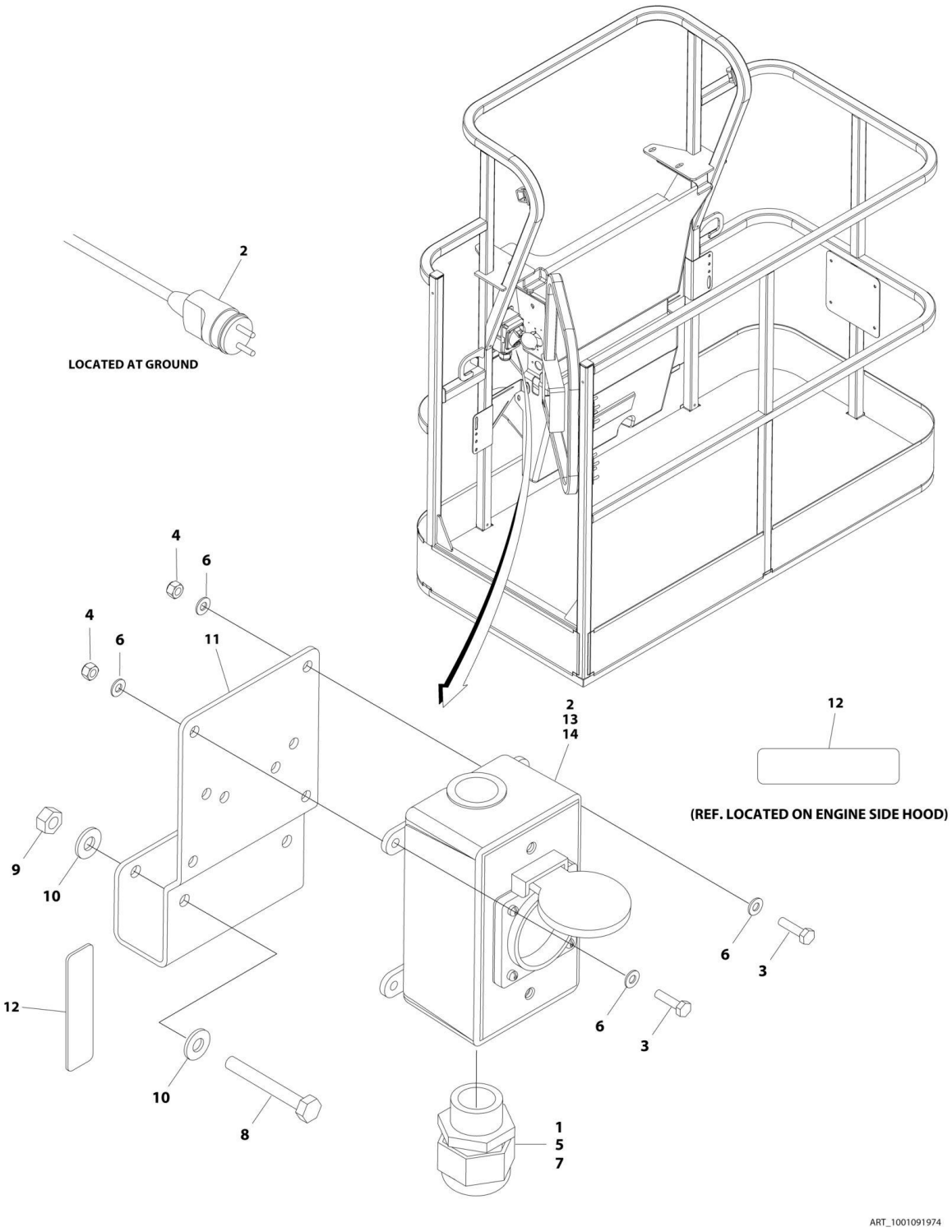

FIGURE 8-9. AC BOX AT PLATFORM - 220V CEE7 2IN X 4IN SIDE GROUND (CE SPEC)

ITEM	PART NUMBER	QTY	DESCRIPTION	REV
	1001091974	Ref	AC BOX AT PLATFORM - 220V CEE7 2IN X 4IN SIDE GROUND (CE SPEC)	F
1	0100020	AR	Sealant	
2	0275453	1	Receptacle Box Kit (See RECEPTACLE BOX KIT - 220V CEE7 SIDE GROUND 2IN X 4IN (CE SPEC) for Breakdown)	
3	0700408	4	Bolt M4 x 16	
4	3290405	4	Nut M4	
5	1001101196	1	Adapter	
6	4811400	8	Washer M4	
7	1001101191	1	Connector, Strain Relief	
8	0641416	2	Bolt 1/4 x 2	
9	3311405	2	Nut 1/4	
10	4711400	4	Washer 1/4	
11	1001193018	1	Bracket	
12	3251242	2	Decal - 240V/50HZ	
13	4460806	2	Terminal, Fork	
14	1001205958	1	Terminal, Wire Pin	

FIGURE 8-10. AC BOX AT PLATFORM - 220V AFSINT107 (CE SPEC)

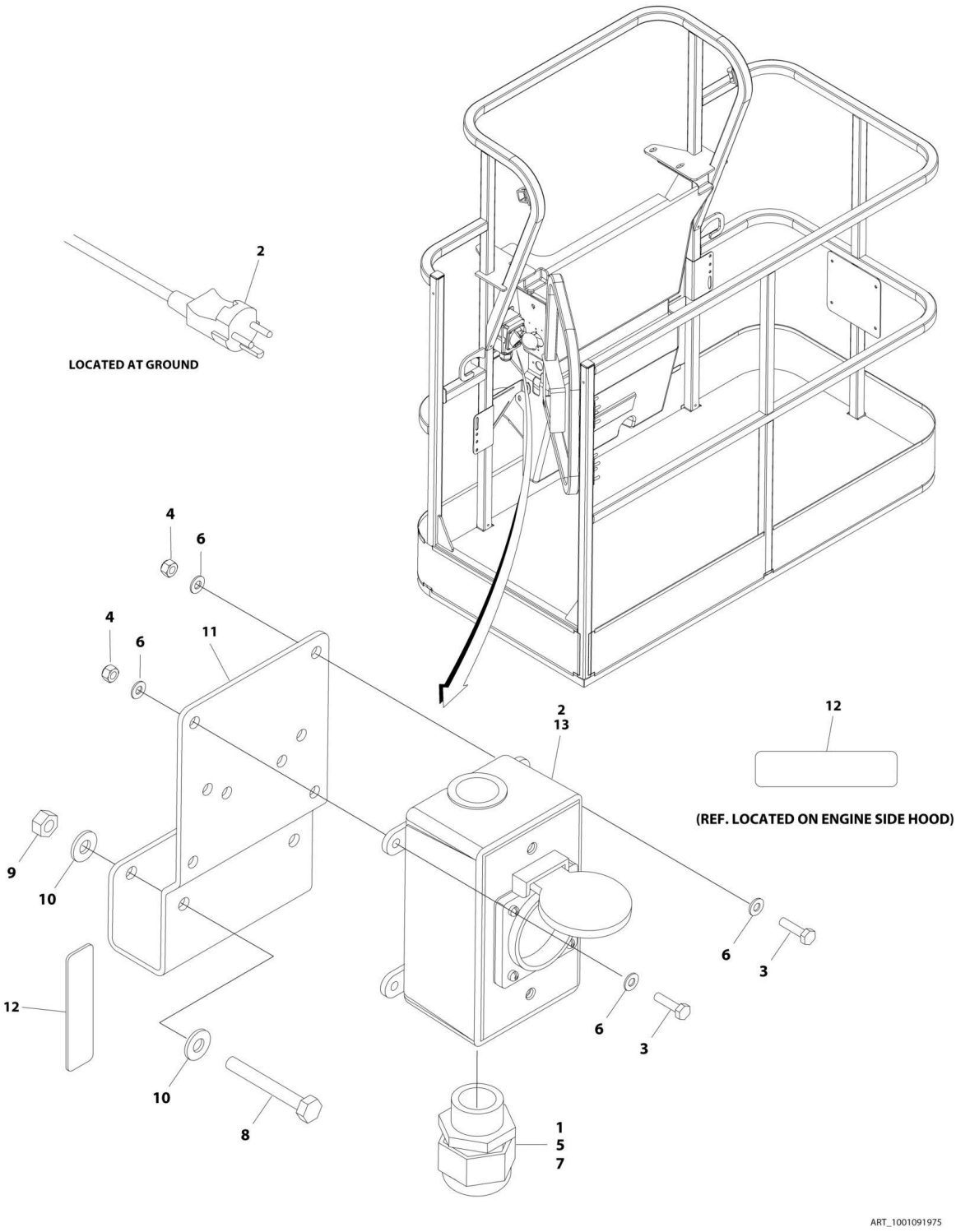

FIGURE 8-10. AC BOX AT PLATFORM - 220V AFSINT107 (CE SPEC)

ITEM	PART NUMBER	QTY	DESCRIPTION	REV
	1001091975	Ref	AC BOX AT PLATFORM - 220V AFSINT107 (CE SPEC)	F
1	0100020	AR	Sealant	
2	0275454	1	Receptacle Box Kit (See RECEPTACLE BOX KIT - 220V AFSINT107 (CE SPEC) for Breakdown)	
3	0700408	4	Bolt M4 x 16	
4	3290405	4	Nut M4	
5	1001101196	1	Adapter	
6	4811400	8	Washer M4	
7	1001101191	1	Connector, Strain Relief	
8	0641416	2	Bolt 1/4 x 2	
9	3311405	2	Nut 1/4	
10	4711400	4	Washer 1/4	
11	1001193018	1	Bracket	
12	3251242	2	Decal - 240V/50HZ	
13	1001205958	3	Terminal, Wire Pin	

FIGURE 8-11. AC BOX AT PLATFORM INSTALLATION - 220V CUSTOMER SUPPLIED COMPONENTS (ANSI EXPORT, AUSTRALIAN, CE AND CHINA SPECS)

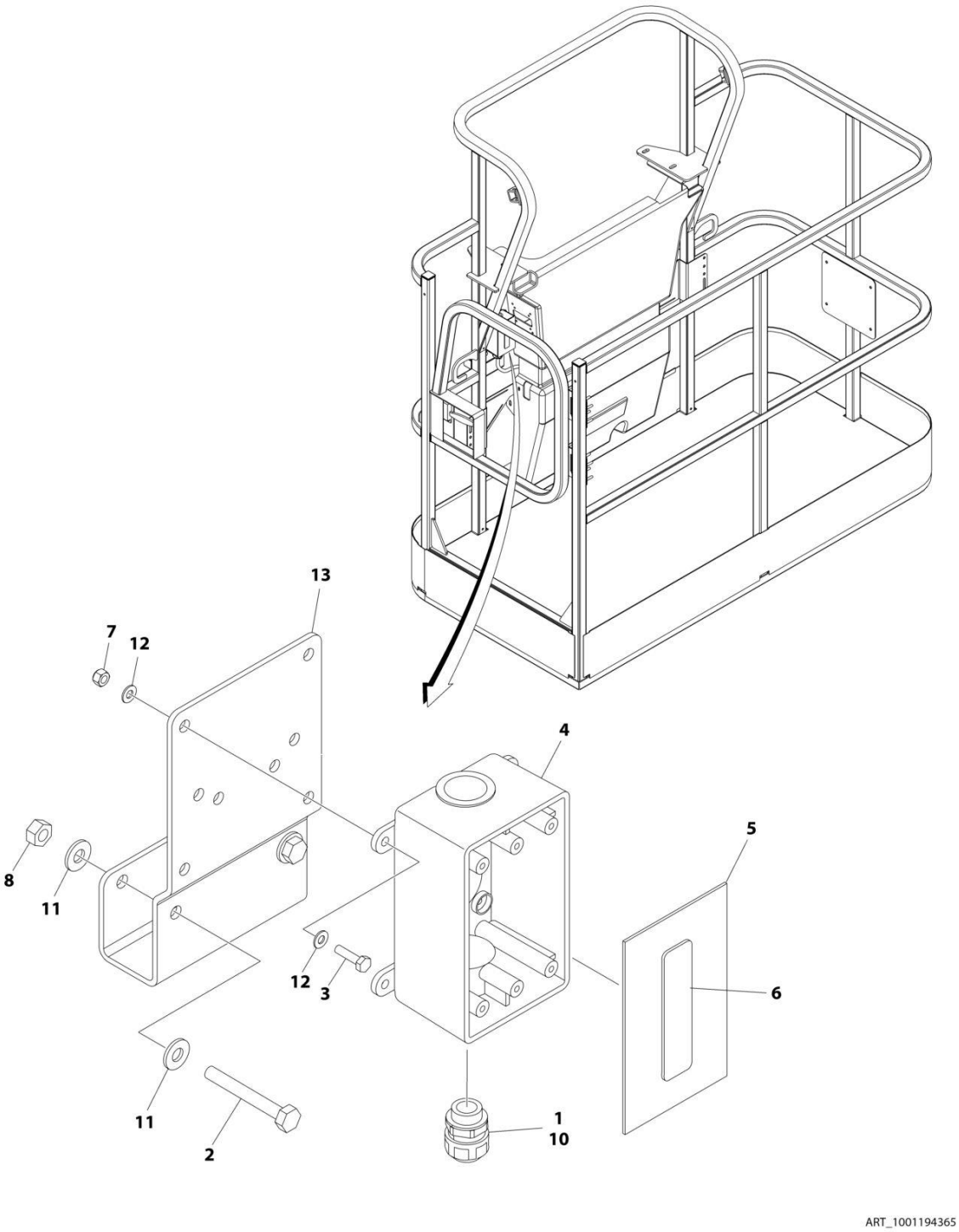

FIGURE 8-11. AC BOX AT PLATFORM INSTALLATION - 220V CUSTOMER SUPPLIED COMPONENTS (ANSI EXPORT, AUSTRALIAN, CE AND CHINA SPECS)

ITEM	PART NUMBER	QTY	DESCRIPTION	REV
	1001194365	Ref	AC BOX AT PLATFORM INSTALLATION - BOX WITH COVER (2X4 BOX)	A
1	0100020	AR	Sealant	
2	0641416	2	Bolt 1/4 x 2	
3	0700408	4	Bolt M4 x 16	
4	0861731	1	Box, Switch	
5	1670603	1	Cover	
6	3251242	1	Decal - 240V/50Hz	
7	3290405	4	Nut M4	
8	3311405	2	Nut 1/4	
9	4460384	3	Terminal (Not Shown)	
10	4460662	1	Connector, Strain Relief	
11	4711400	4	Washer 1/4	
12	4811400	8	Washer M4	
13	1001193018	1	Bracket, AC Receptacle	

FIGURE 8-12. AC CABLE INSTALLATION - WITH THREE BREAKERS (CE SPECS)

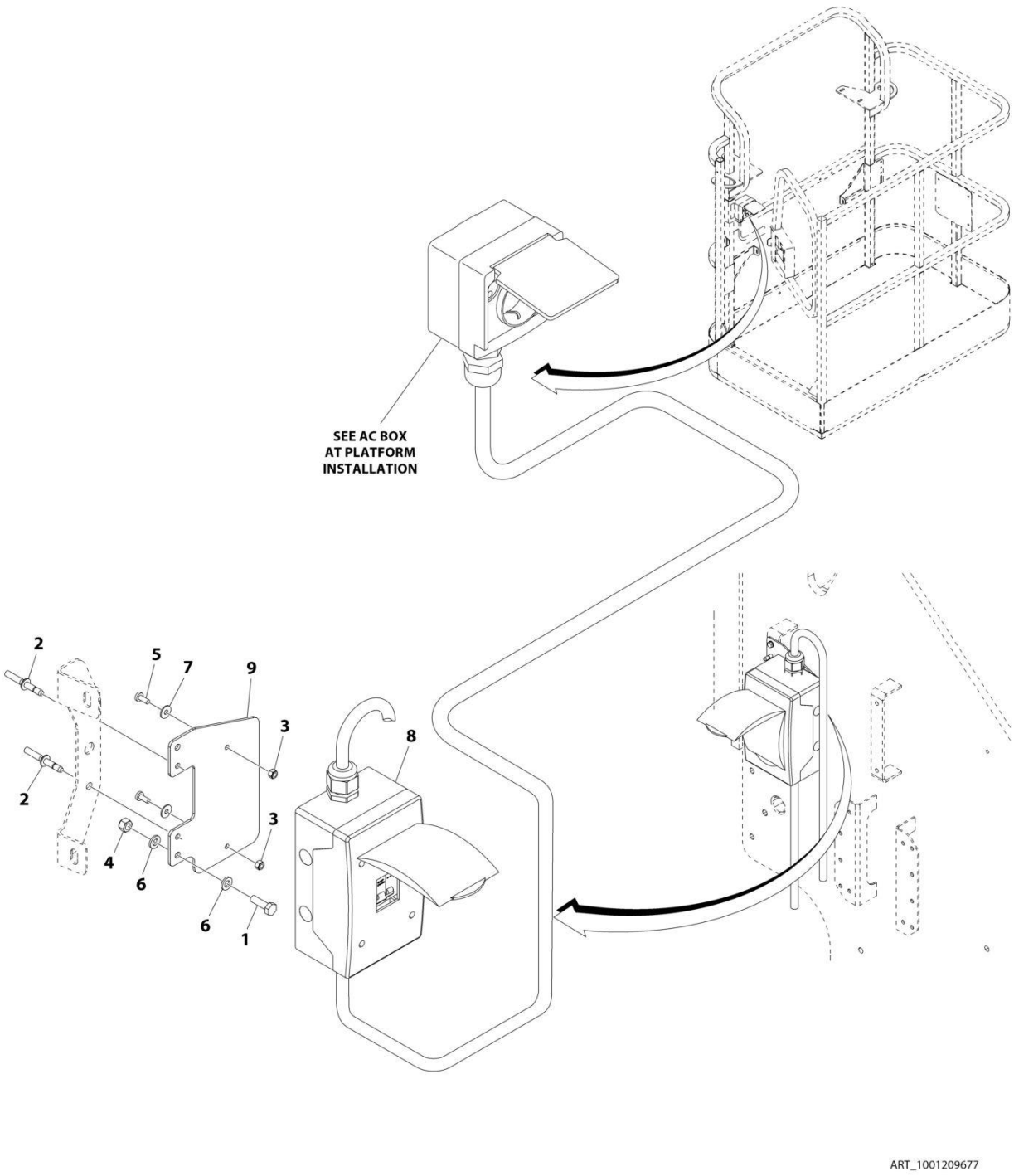

FIGURE 8-12. AC CABLE INSTALLATION - WITH THREE BREAKERS (CE SPECS)

ITEM	PART NUMBER	QTY	DESCRIPTION	REV
	1001209677	Ref	AC CABLE INSTALLATION - WITH THREE BREAKERS (CE SPECS)	A
1	0760610	2	Bolt M6 x 20	
2	2080040	2	Fastener, Huck	
3	3290405	2	Nut M4	
4	3290605	2	Nut M6	
5	4010405	2	Screw M4 x 10	
6	4811700	4	Washer M6	
7	1001091102	2	Washer M4	
8	1001152485	1	Breaker Box Kit - CE Spec (See BREAKER BOX KIT WITH THREE BREAKERS - CE SPEC for Breakdown)	
9	1001209832	1	Bracket	

FIGURE 8-13. BATTERY DISCONNECT SWITCH

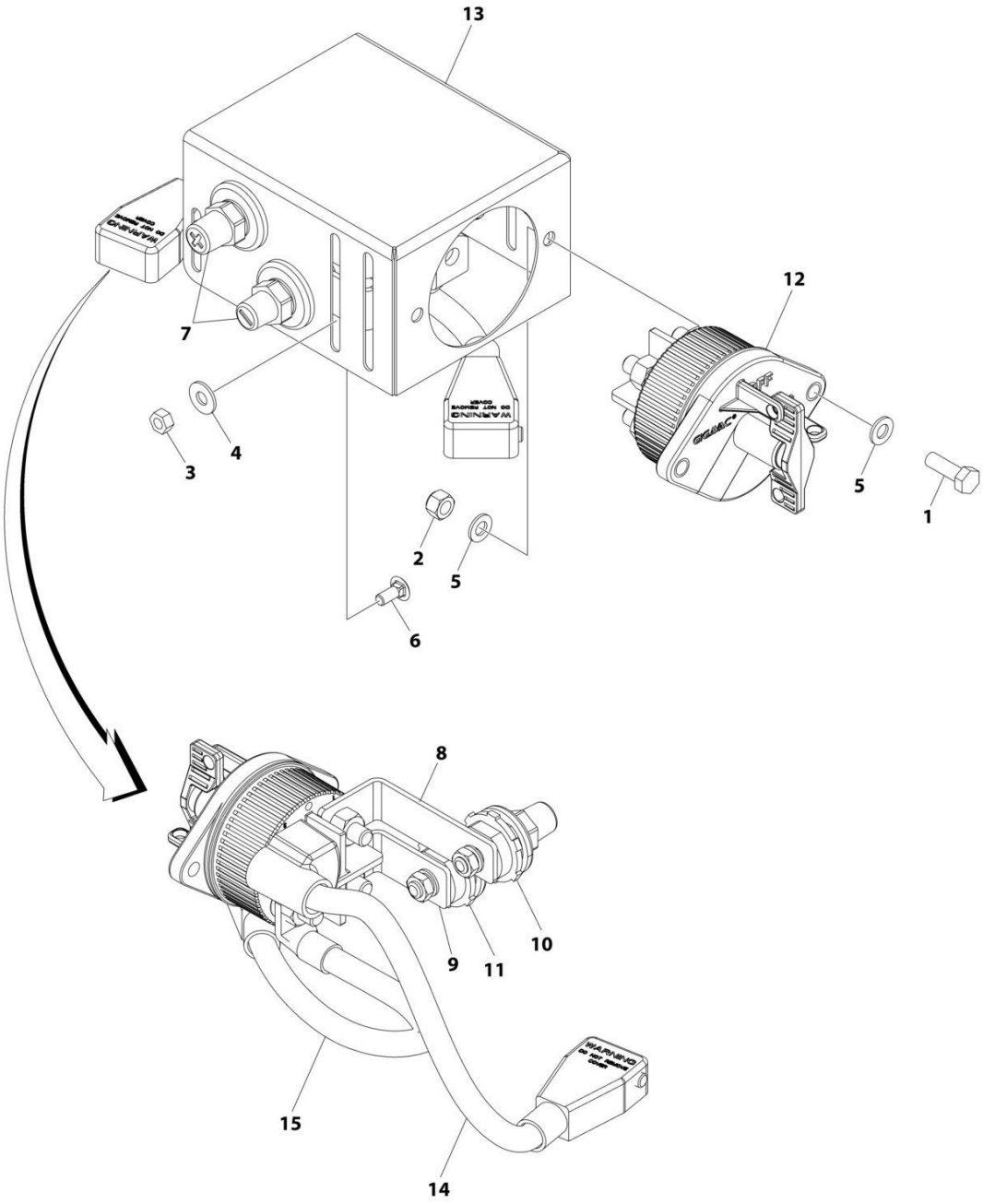

FIGURE 8-13. BATTERY DISCONNECT SWITCH

ITEM	PART NUMBER	QTY	DESCRIPTION	REV
	1001236304	Ref	BATTERY DISCONNECT SWITCH INSTALLATION	A
1	0760812	2	Bolt M8 x 25	
2	3290805	2	Nut M8	
3	3311405	3	Nut 1/4	
4	4751400	3	Washer 1/4	
5	4811900	4	Washer M8	
6	88411013	3	Bolt 1/4 x 3/4	
7	1001206476	1	Connectors, Post	
8	1001209432	1	Bussbar	
9	1001209474	1	Bussbar	
10	1001214570	1	Connector (Red)	
11	1001214571	1	Connector (Black)	
12	1001225346	1	Switch, Battery	
13	1001226531	1	Mount	
14	1001236504	1	Cable, Battery (+)	
15	1001236505	1	Cable, Battery (-)	

FIGURE 8-14. BEACON HARNESS (BLUE BEACON LIGHT ONLY)

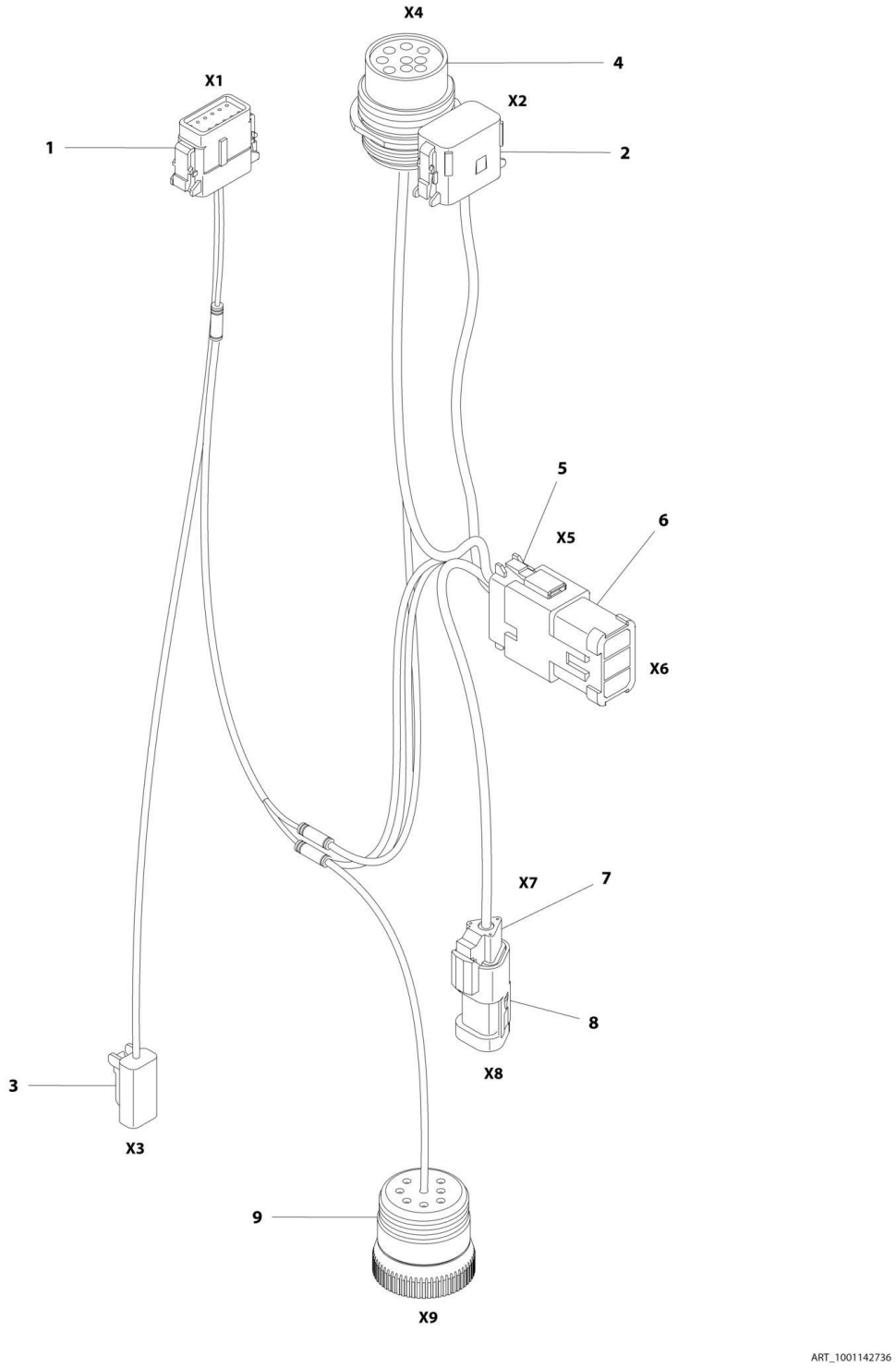

FIGURE 8-14. BEACON HARNESS (BLUE BEACON LIGHT ONLY)

ITEM	PART NUMBER	QTY	DESCRIPTION	REV
	1001142736	Ref	BEACON HARNESS (BLUE BEACON LIGHT ONLY)	E
1	1001116808	1	Plug, Male - 12 Position	
1	4460928	3	Socket, Female	
1	4460518	9	Plug, Terminal	
2	1001116774	1	Plug, Male - 12 Position	
2	4460928	3	Socket, Female	
2	4460518	9	Plug, Terminal	
3	4460891	1	Plug, Male - 2 Position	
3	4460465	2	Socket, Female	
4	1001112612	1	Connector - 9 Position	
4	4460464	6	Pin, Male	
4	4460466	3	Plug, Terminal	
5	4460933	1	Plug, Male - 12 Position	
5	4460465	12	Socket, Female	
6	1001119020	1	Bussbar - 12 Position	
7	4461095	1	Plug, Male - 3 Position	
7	4460465	3	Socket, Female	
8	4461070	1	Bussbar - 3 Position	
9	1001112796	1	Connector - 9 Position	
9	4460465	6	Socket, Female	
9	4460466	3	Plug, Terminal	

FIGURE 8-15. BEACON EXTENSION HARNESS (BLUE BEACON LIGHT ONLY)

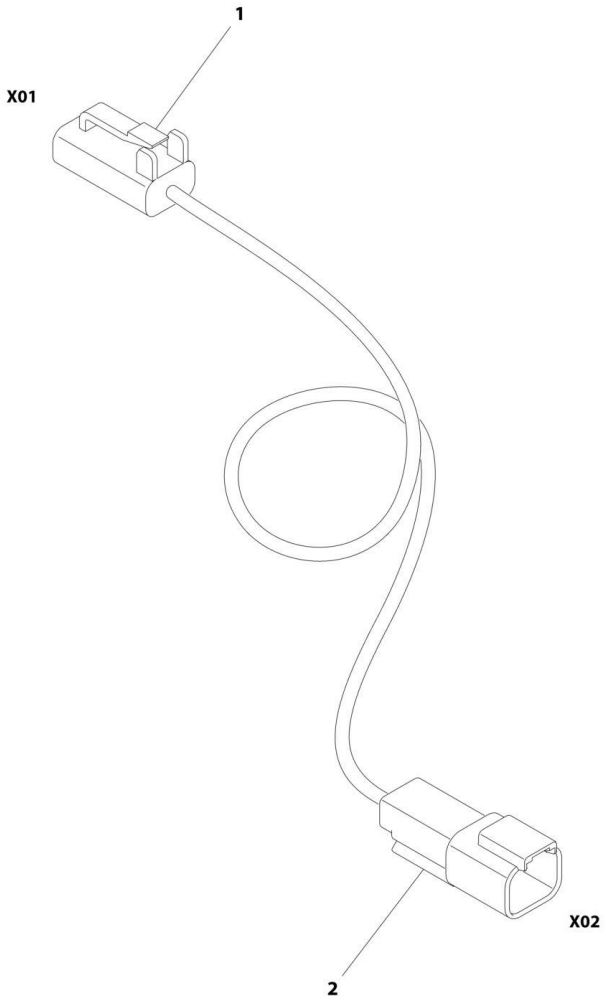

FIGURE 8-15. BEACON EXTENSION HARNESS (BLUE BEACON LIGHT ONLY)

ITEM	PART NUMBER	QTY	DESCRIPTION	REV
	1001196458	Ref	BEACON EXTENSION HARNESS (BLUE BEACON LIGHT ONLY)	B
1	4460891	1	Plug, Male - 2 Position	
1	4460465	2	Socket, Female	
2	4460897	1	Receptacle, Female	
2	4460464	2	Pin, Male	

FIGURE 8-16. BOOM HARNESS - 400S

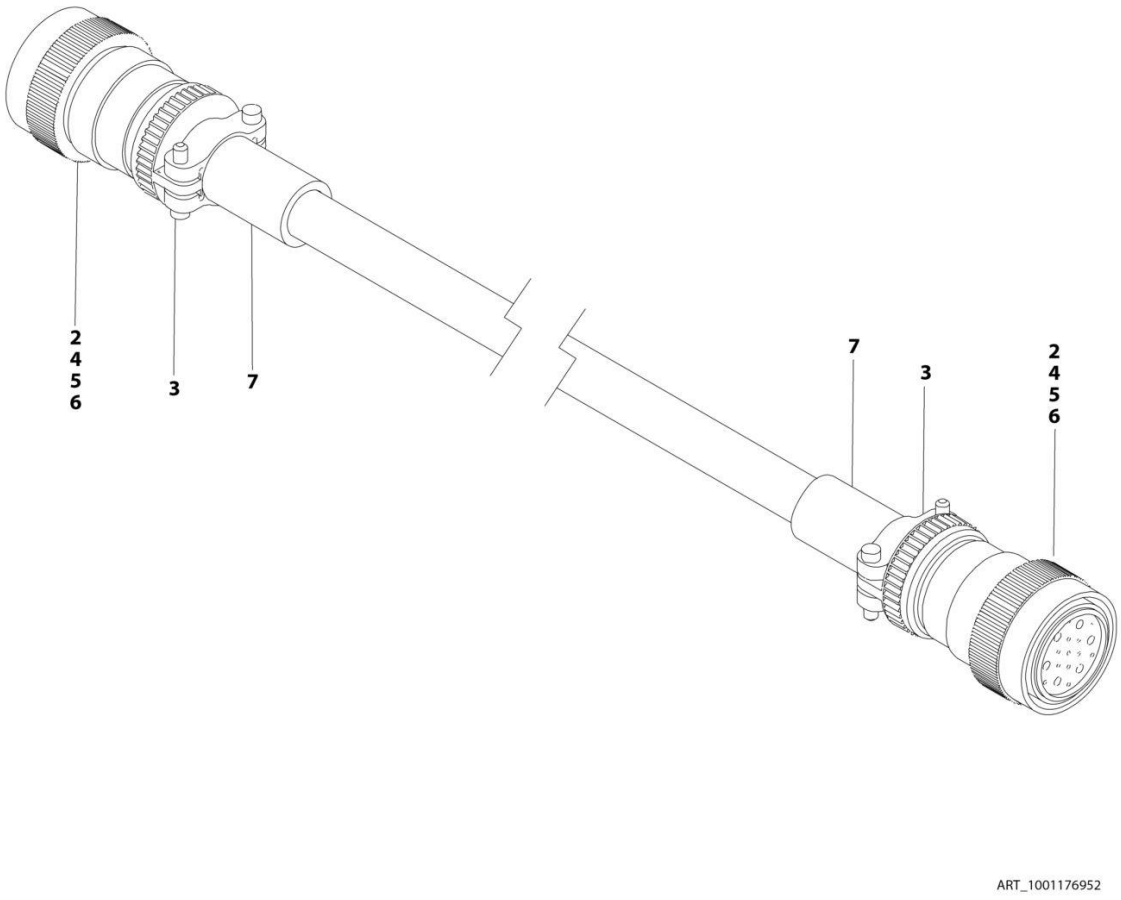

FIGURE 8-16. BOOM HARNESS - 400S

ITEM	PART NUMBER	QTY	DESCRIPTION	REV
	1001176952	Ref	BOOM HARNESS - 400S	C
2	4460865	2	Connector - 19 Position	
3	4460473	2	Clamp	
4	4460465	20	Socket, Female	
5	4460509	8	Socket, Female	
6	4460466	10	Plug, Socket	
7	1001226400	AR	Heat Shrink	

FIGURE 8-17. BOOM HARNESS - 460SJ

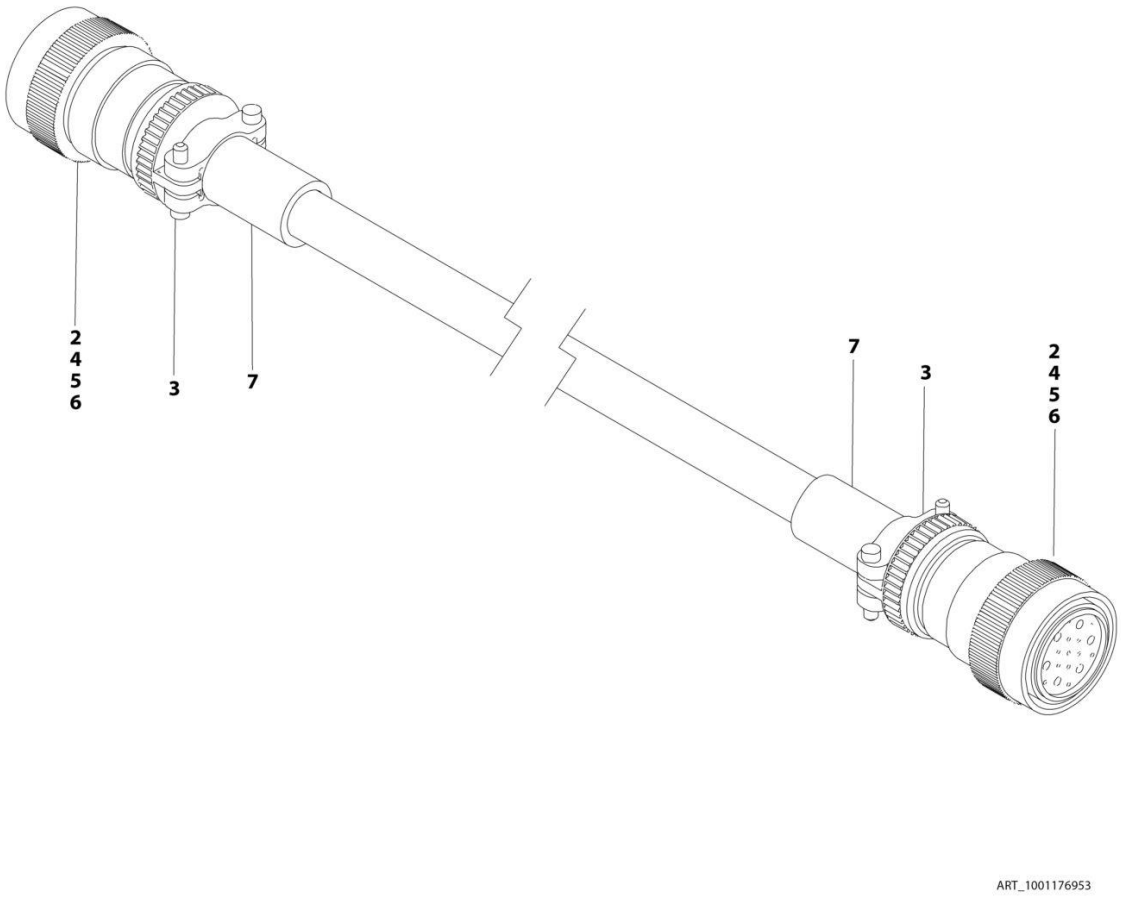

FIGURE 8-17. BOOM HARNESS - 460SJ

ITEM	PART NUMBER	QTY	DESCRIPTION	REV
	1001176953	Ref	BOOM HARNESS - 460SJ	C
2	4460865	2	Connector - 19 Position	
3	4460473	2	Clamp	
4	4460465	20	Socket, Female	
5	4460509	8	Socket, Female	
6	4460466	10	Plug, Socket	
7	1001226400	AR	Heat Shrink	

FIGURE 8-18. BOOM CAPACITY PROXIMITY SWITCH HARNESS (400S ONLY)

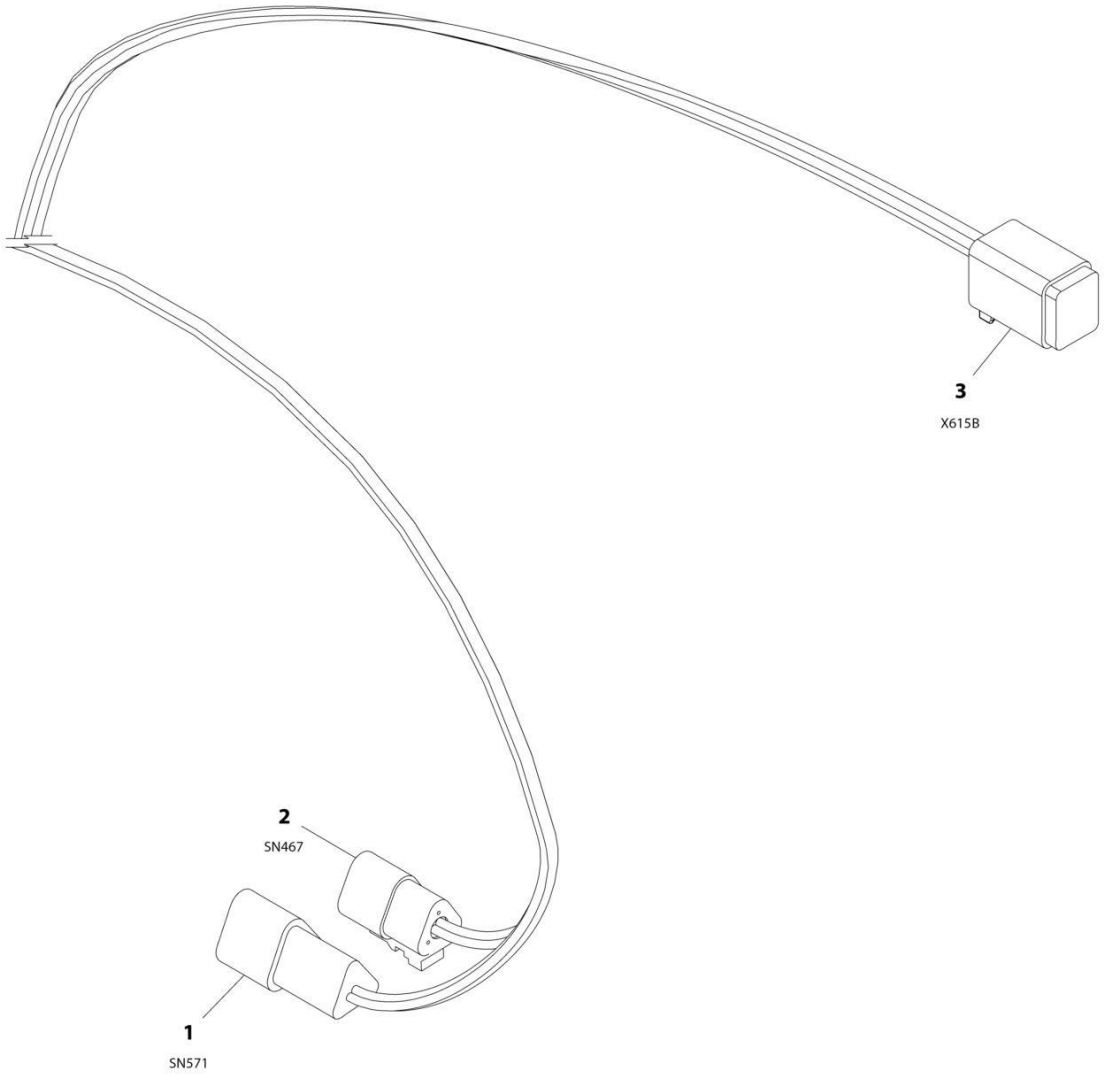

FIGURE 8-18. BOOM CAPACITY PROXIMITY SWITCH HARNESS (400S ONLY)

ITEM	PART NUMBER	QTY	DESCRIPTION	REV
	1001173807	Ref	BOOM CAPACITY PROXIMITY SWITCH HARNESS (400S ONLY)	C
1	4460536	1	Receptacle, Female - 3 Position	
1	4460464	3	Pin, Male	
2	4460539	1	Plug, Male - 3 Position	
2	4460465	1	Socket, Female	
3	4460930	1	Plug, Male - 6 Position	
3	4460465	6	Socket, Female	

FIGURE 8-19. BOOM TELE IN PROXIMITY SWITCH HARNESS

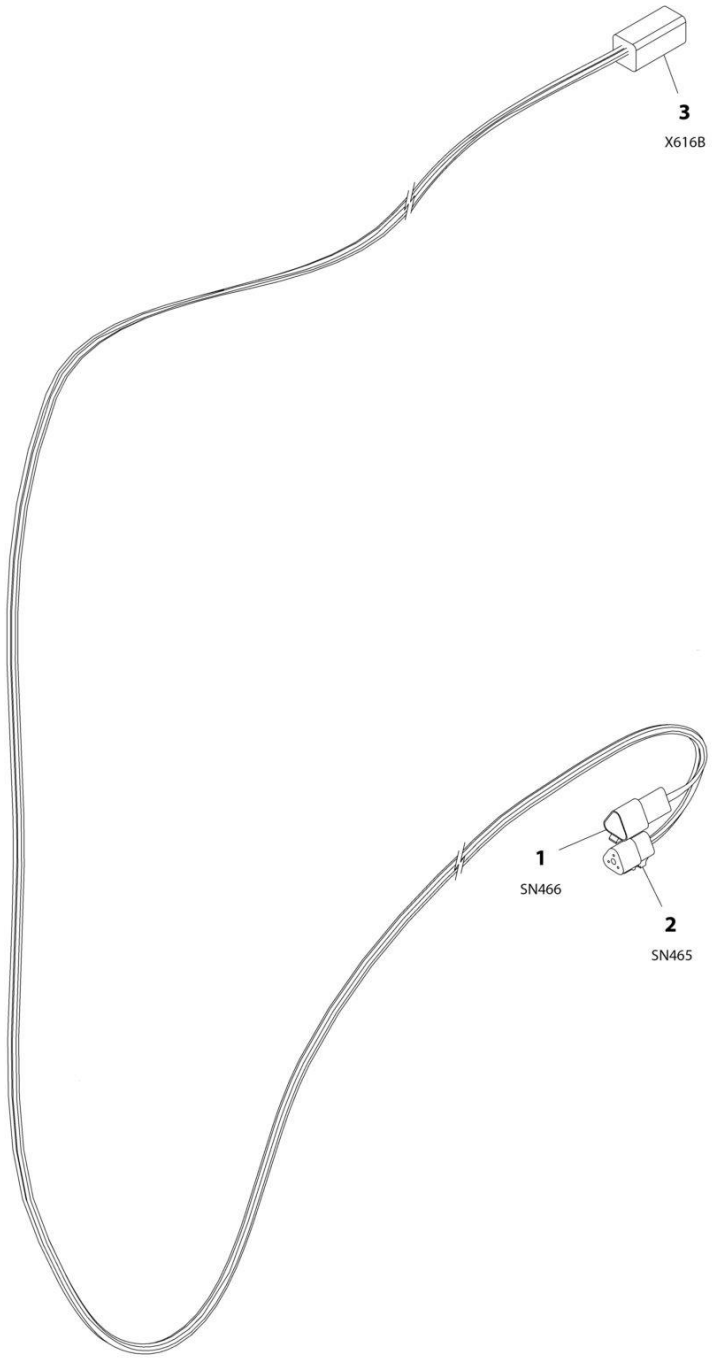

FIGURE 8-19. BOOM TELE IN PROXIMITY SWITCH HARNESS

ITEM	PART NUMBER	QTY	DESCRIPTION	REV
	1001173808	Ref	BOOM TELE IN PROXIMITY SWITCH HARNESS	C
1	4460536	1	Receptacle, Female - 3 Position	
1	4460464	3	Pin, Male	
2	4460539	1	Plug, Male - 3 Position	
2	4460465	1	Socket, Female	
3	4460899	1	Receptacle, Female - 6 Position	
3	4460464	1	Pin, Male	

FIGURE 8-20. BREAKER BOX INSTALLATION - 110/220V 10AMP BREAKER (CE SPEC) (SN 0300203771 through 0300220609)

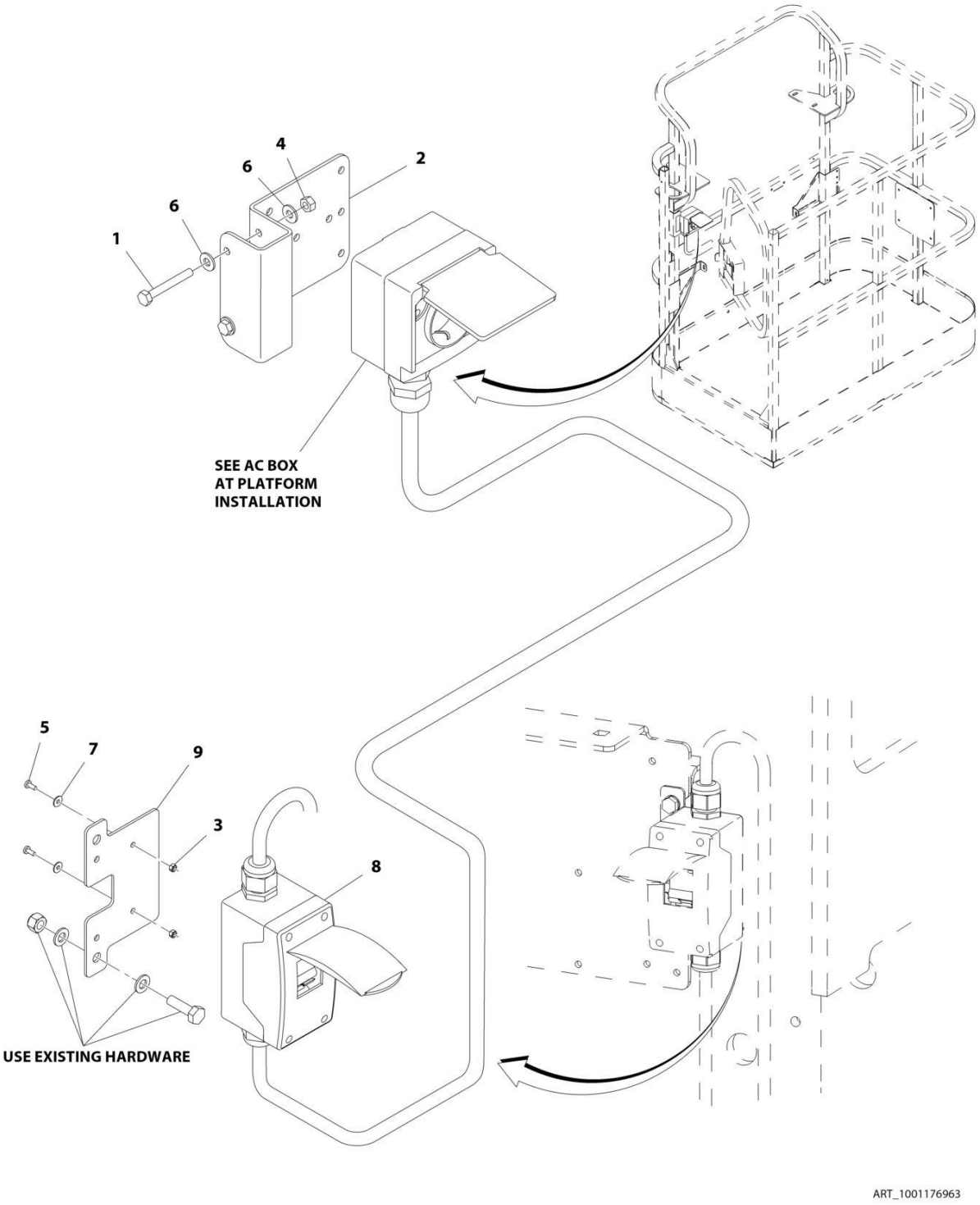

FIGURE 8-20. BREAKER BOX INSTALLATION - 110/220V 10AMP BREAKER (CE SPEC) (SN 0300203771 through 0300220609)

ITEM	PART NUMBER	QTY	DESCRIPTION	REV
	1001176963	Ref	BREAKER BOX INSTALLATION - 110/220V 10AMP BREAKER (CE SPEC) **(SN 0300203771 through 0300220609)**	A
1	0641416	2	Bolt M1/4 x 2	
2	0903484	1	Bracket	
3	3290405	2	Nut M4	
4	3311405	2	Nut 1/4	
5	4010405	2	Screw M4	
6	4711400	2	Washer	
7	1001091102	2	Washer M4	
8	1001109864	1	Breaker Box Kit (See BREAKER BOX KIT - 110/220V 10AMP BREAKER (CE SPEC) for Breakdown)	
9	1001174158	1	Bracket	

FIGURE 8-21. BREAKER BOX INSTALLATION - 110/220V 16AMP BREAKER (CE SPEC) (SN 0300203771 through 0300239571, SN E300000100 through E300005185, SN 1300007289 through 1300007393)

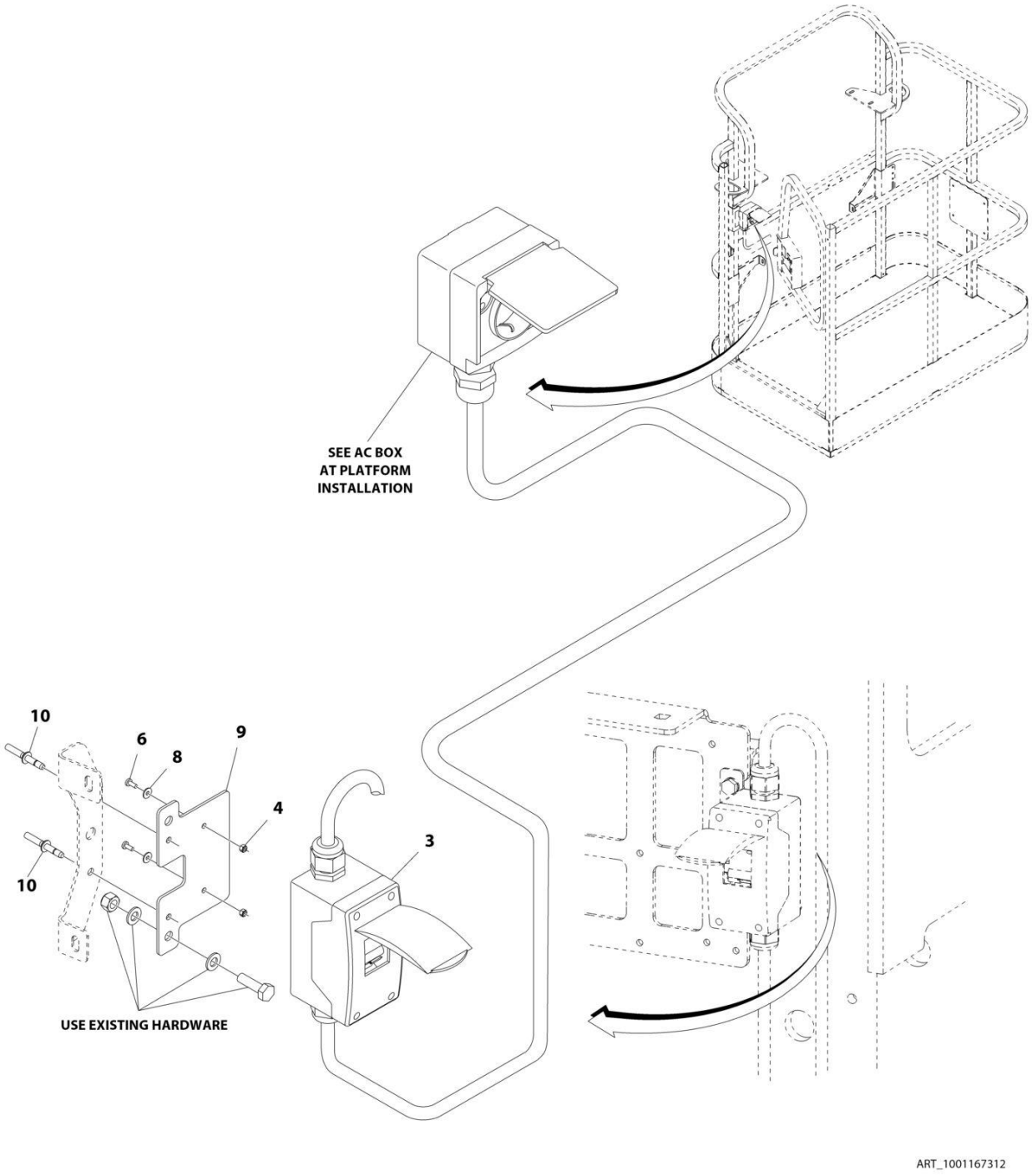

FIGURE 8-21. BREAKER BOX INSTALLATION - 110/220V 16AMP BREAKER (CE SPEC) (SN 0300203771 through 0300239571, SN E300000100 through E300005185, SN 1300007289 through 1300007393)

ITEM	PART NUMBER	QTY	DESCRIPTION	REV
	1001167312	Ref	BREAKER BOX INSTALLATION - 110/220V 16AMP BREAKER (CE SPEC)	F
3	2902549	1	Breaker Box Kit (See BREAKER BOX KIT - 110/220V 16AMP BREAKER (CE SPEC) for Breakdown)	
4	3290405	AR	Nut M4	
4	3290605	AR	Nut M6	
6	4010405	AR	Screw M4 x 10	
6	0760614	AR	Screw M6 x 30	
8	1001091102	AR	Washer M4	
8	4811700	AR	Washer M6	
9	1001174158	1	Bracket	
10	2080040	2	Fastener, Blind	

FIGURE 8-22. BREAKER BOX INSTALLATION - 110/220V 16AMP BREAKER (CE SPEC) (SN 0300239572 through 0300272360, SN E300005186 through E300007988)

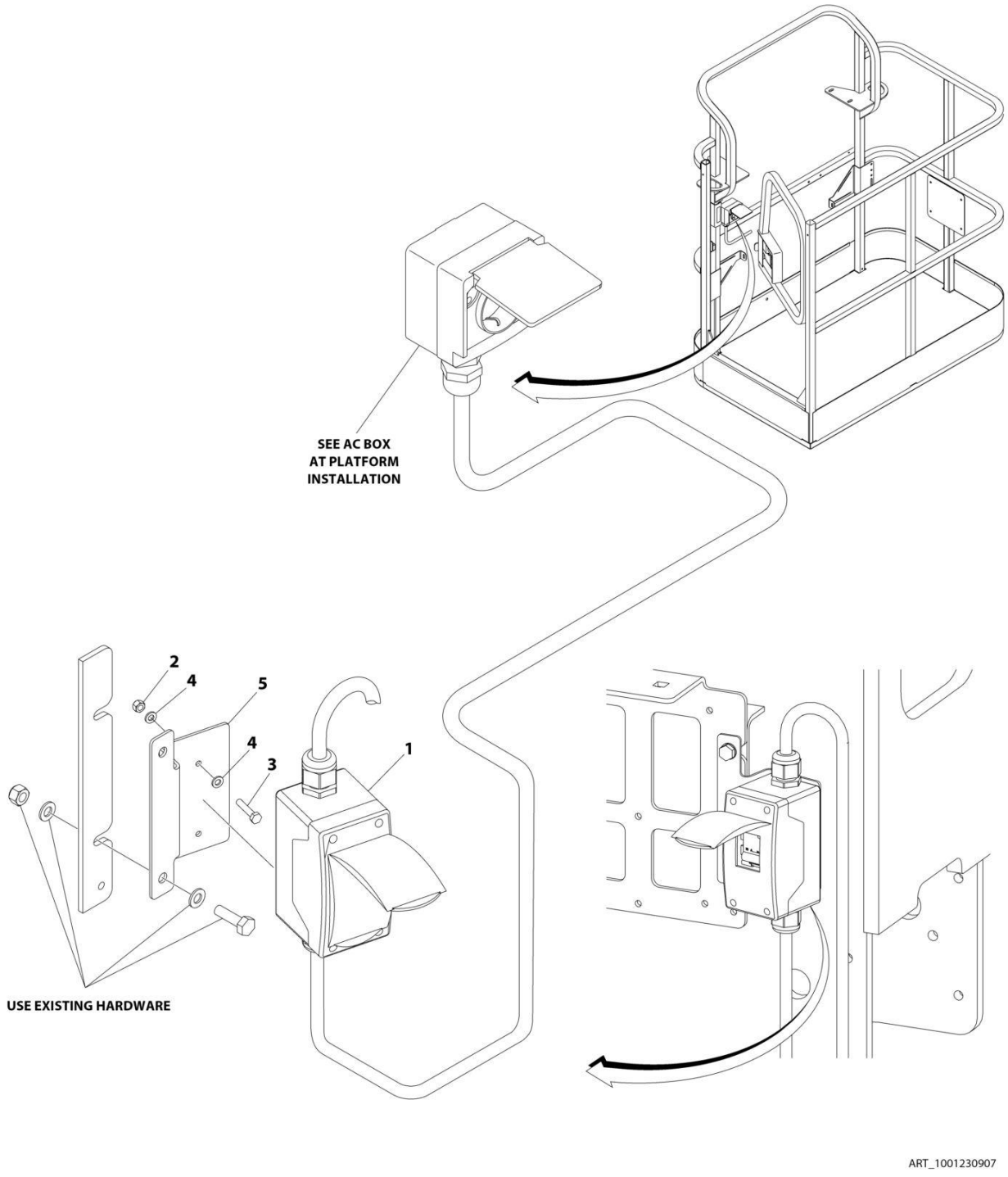

FIGURE 8-22. BREAKER BOX INSTALLATION - 110/220V 16AMP BREAKER (CE SPEC) (SN 0300239572 through 0300272360, SN E300005186 through E300007988)

ITEM	PART NUMBER	QTY	DESCRIPTION	REV
	1001230907	Ref	BREAKER BOX INSTALLATION - 110/220V 16AMP BREAKER (CE SPEC)	B
1	2902549	1	Breaker Box Kit (See BREAKER BOX KIT - 110/220V 16AMP BREAKER (CE SPECS) for Breakdown)	
2	3290405	AR	Nut M4	
2	3290605	AR	Nut M6	
3	4010405	AR	Screw M4 x 10	
3	0760614	AR	Screw M6 x 30	
4	1001091102	AR	Washer M4	
4	4811700	AR	Washer M6	
5	1001230784	1	Bracket	

FIGURE 8-23. BREAKER BOX KIT - 110/220V 10AMP BREAKER (CE SPEC)

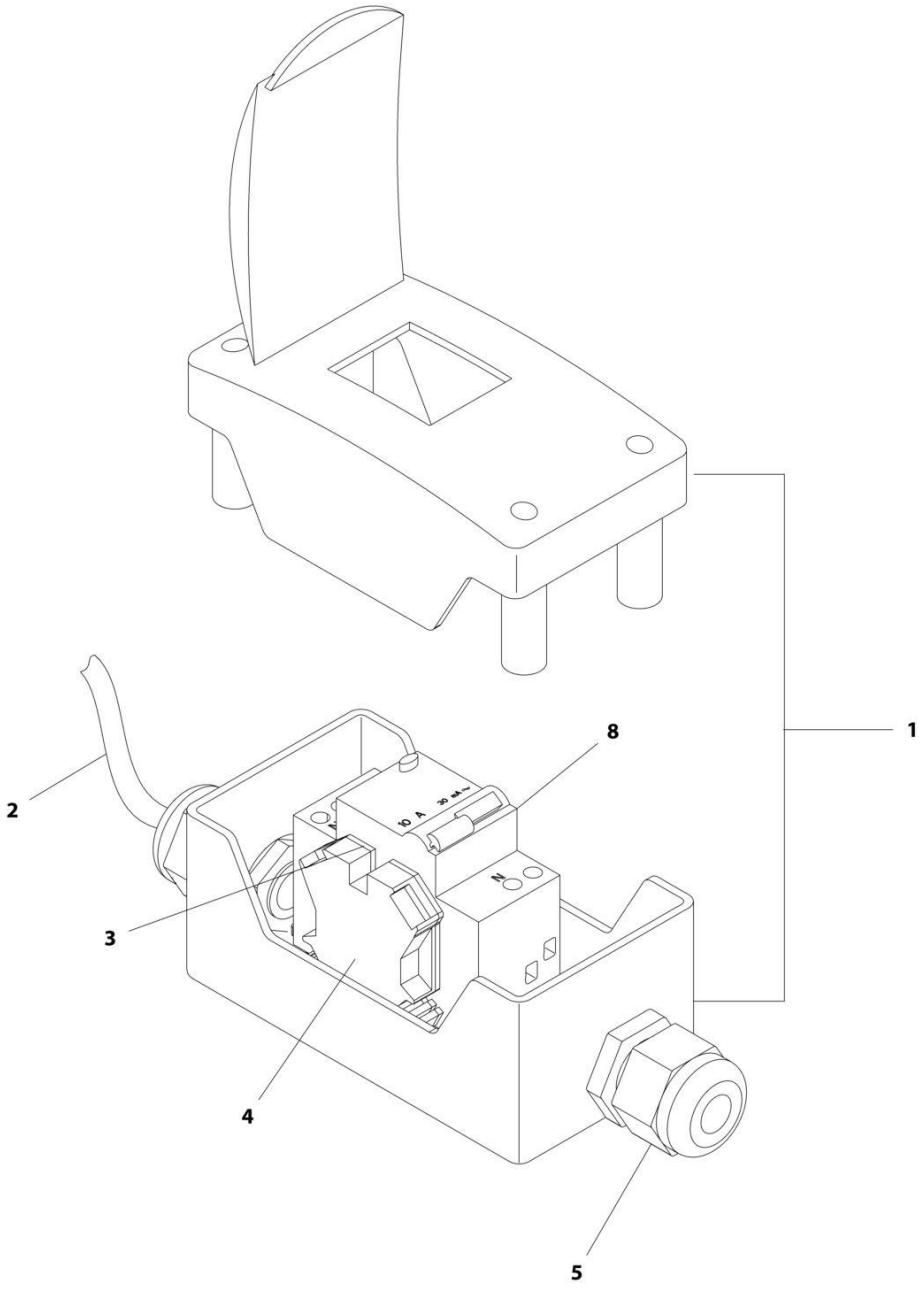

ART_1001109864

FIGURE 8-23. BREAKER BOX KIT - 110/220V 10AMP BREAKER (CE SPEC)

ITEM	PART NUMBER	QTY	DESCRIPTION	REV
	1001109864	Ref	BREAKER BOX KIT - 110/220V 10AMP BREAKER (CE SPEC)	B
1	0861880	1	Box	
2	1060908	6 ft/1.8m	Cable, 12/3	
3	4460956	1	Barrier, Terminal	
4	4460957	1	Block, Terminal	
5	1001097150	2	Connector, Strain Relief	
8	1001181046	1	Breaker, 10A/30mA Combination	

FIGURE 8-24. BREAKER BOX KIT - 110/220V 16AMP BREAKER (CE SPEC)

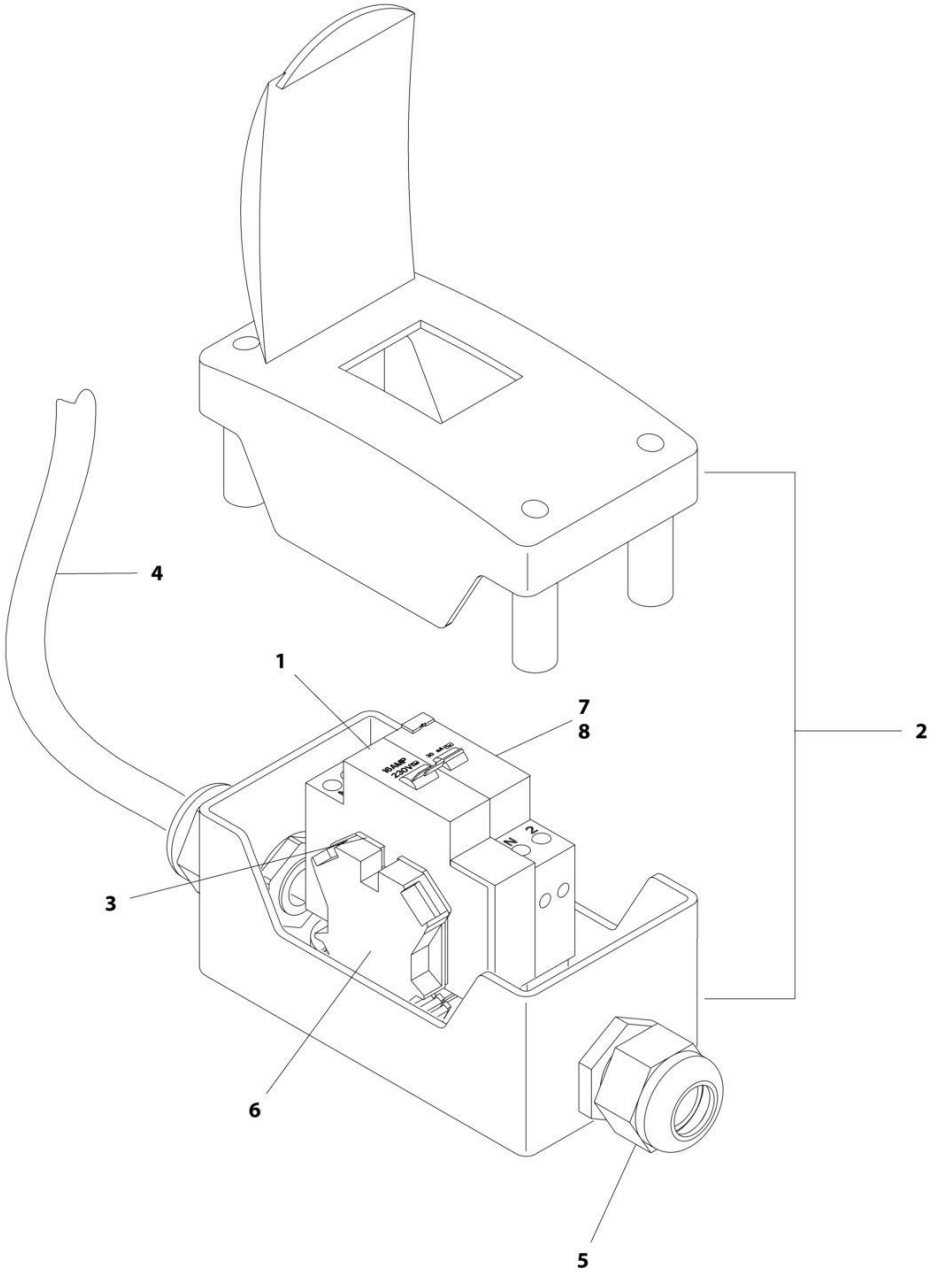

FIGURE 8-24. BREAKER BOX KIT - 110/220V 16AMP BREAKER (CE SPEC)

ITEM	PART NUMBER	QTY	DESCRIPTION	REV
	2902549	Ref	BREAKER BOX KIT - 110/220V 16AMP BREAKER (CE SPEC)	F
1	1001109475	NLA	Breaker, 16 Amp (Use p/n 1001181045)	
2	0861880	1	Box	
3	4460956	1	Barrier, Terminal	
4	1060908	6 ft/1.8m	Cable, 12/3	
5	1001097150	2	Connector, Strain Relief	
6	4460957	1	Block, Terminal	
7	1001109482	NLA	Breaker, 30mA (Use p/n 1001181045)	
8	1001181045	1	Breaker, 16A/30mA Combination **(SN 0300204390 through 0300272360, Except SN 0300272174 through 0300272184)**	

FIGURE 8-25. ENGINE HARNESS - DEUTZ D2011

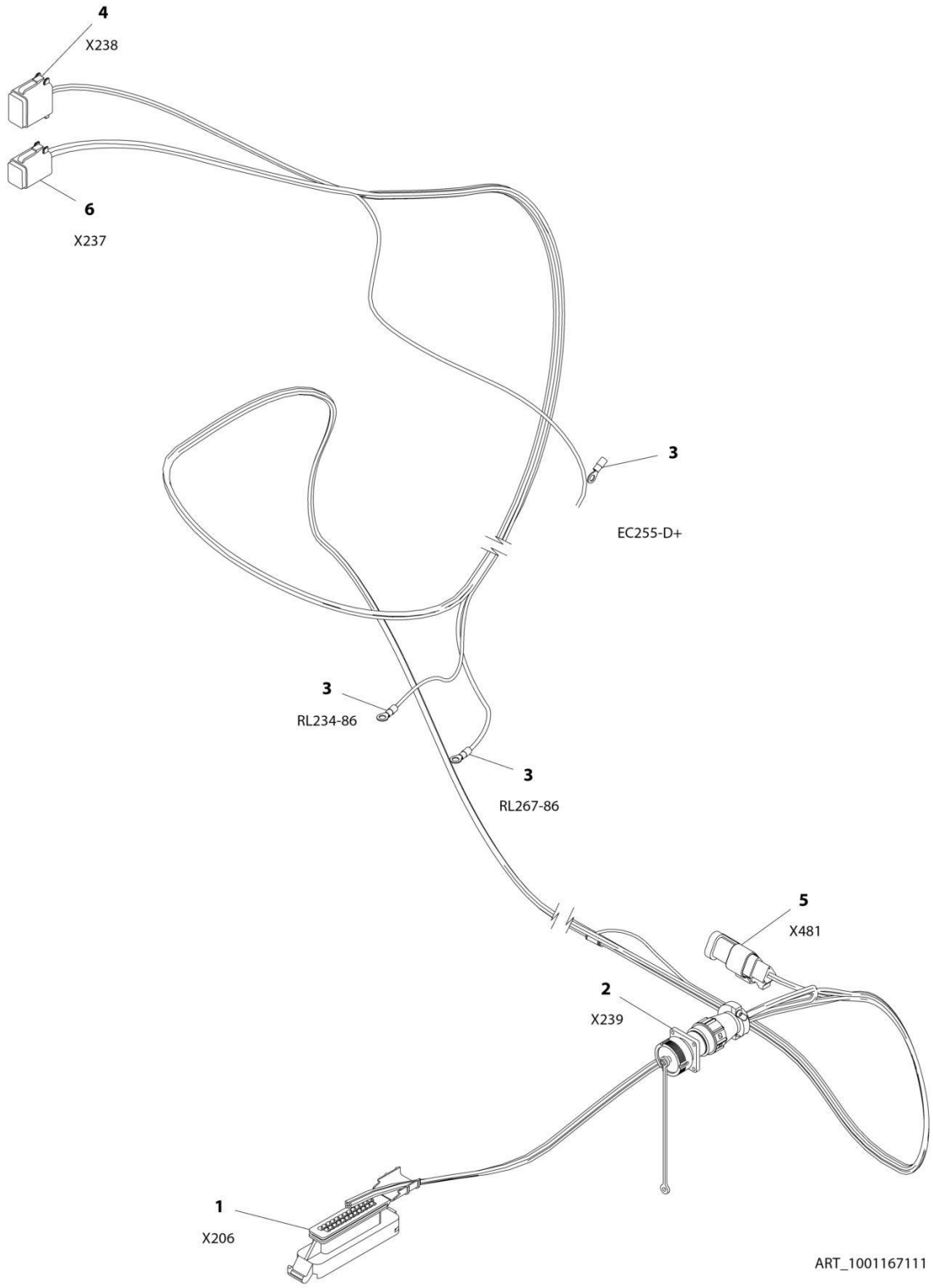

FIGURE 8-25. ENGINE HARNESS - DEUTZ D2011

ITEM	PART NUMBER	QTY	DESCRIPTION	REV
	1001167111	Ref	ENGINE HARNESS - DEUTZ D2011	B
1	4461052	1	Connector - 25 Position	
1	4461005	7	Terminal	
1	4461008	18	Plug, Terminal	
2	2902443	1	Receptacle Kit	
2	4461071	8	Socket, Female	
2	4461072	1	Receptacle with Flange - 8 Position	
2	4461073	1	Cap, Dust	
2	4461074	1	Shell, Black	
3	4460313	3	Terminal, Ring	
4	4460930	1	Plug, Male - 8 Position	
4	4460465	2	Socket, Female	
4	4460466	6	Seal, Terminal	
5	4461095	1	Plug, Male - 3 Position	
5	4460465	3	Socket, Female	
6	4460894	1	Plug, Mal e - 6 Position	
6	4460465	6	Socket, Female	

FIGURE 8-26. ENGINE HARNESS - DEUTZ D2.9L4

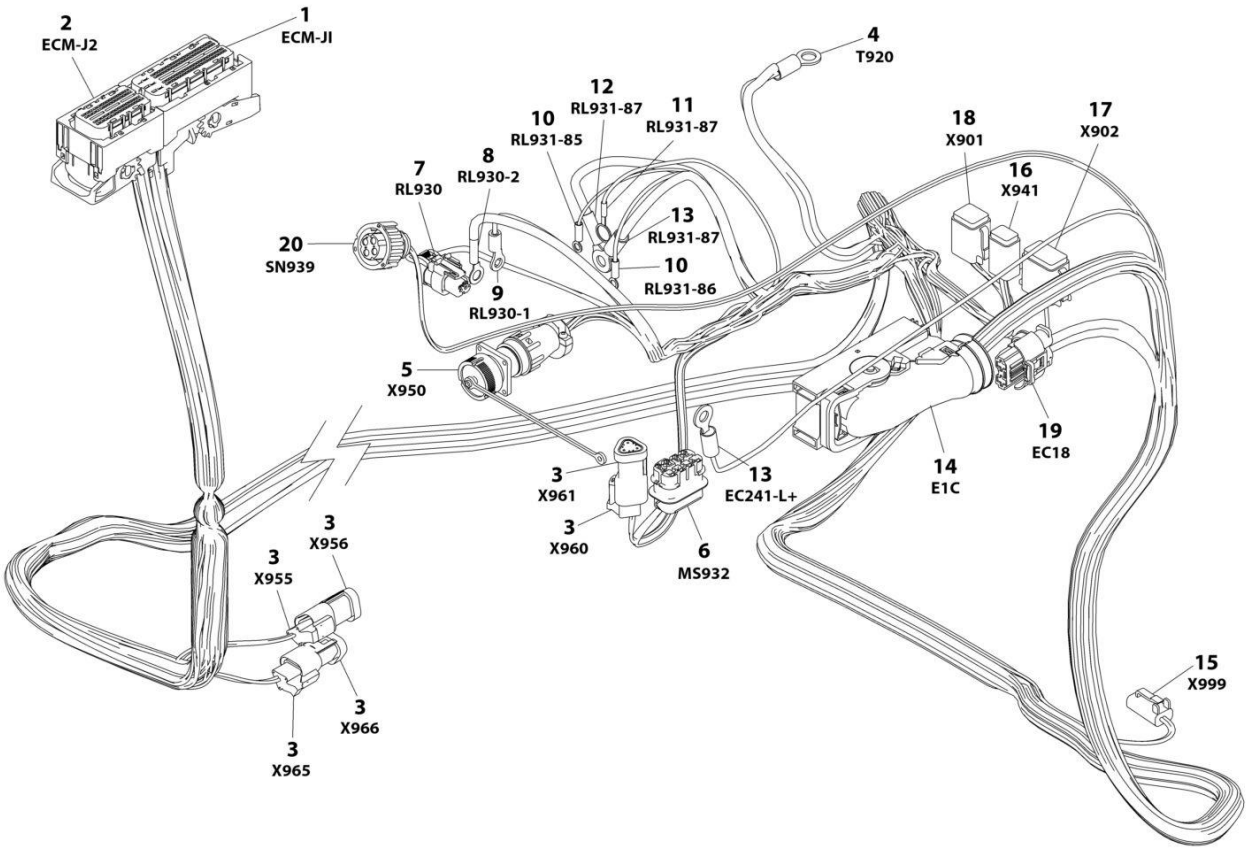

FIGURE 8-26. ENGINE HARNESS - DEUTZ D2.9L4

ITEM	PART NUMBER	QTY	DESCRIPTION	REV
	1001167108	Ref	ENGINE HARNESS - DEUTZ D2.9L4	I
1	1001133956	1	Connector, 94 Position	
1	1001126352	6	Terminal	
1	1001126357	2	Seal, Terminal	
1	1001126356	63	Seal, Terminal	
1	1001126384	21	Terminal	
1	1001126351	2	Terminal	
2	1001133957	1	Connector - 60 Position	
2	1001126357	11	Seal, Terminal	
2	1001126351	13	Terminal	
2	1001126356	19	Seal, Terminal	
2	1001126384	17	Terminal	
3	4461095	3	Plug, Male - 3 Position	
3	4460944	6	Socket, Female	
3	4460466	3	Plug, Terminal	
3	4461070	3	Connector, Female with Resistor 3 Position	
4	8220115	1	Terminal, Ring	
5	2902443	1	Receptacle Kit	
5	4461071	8	Socket, Female	
5	4461072	1	Receptacle with Flange - 8 Position	
5	4461073	1	Cap, Dust	
5	4461074	1	Shell, Black	
6	80484084	1	Connector - 8 Position	
6	1001116727	4	Plug, Terminal	
6	1001116728	4	Terminal	
6	8229242	1	Fuse - 5Amp	
6	80983191	1	Fuse - 10Amp	
6	1001147264	1	Cap	
7	1001116952	1	Plug, Male - 2 Position	
7	4460465	2	Socket, Female	
8	1001117106	1	Terminal, Ring	
9	4460043	1	Terminal, Ring	
10	4460247	2	Terminal, Ring	
11	4460703	1	Terminal, Ring	
12	8220164	1	Terminal, Ring	
13	1001117107	2	Terminal, Ring	
14	1001126362	1	Connector - 62 Position	
14	1001126363	33	Terminal	
14	1001126391	23	Seal, Terminal	
14	4461008	4	Seal, Terminal	
14	1001126365	2	Terminal	
15	4460891	1	Plug, Male - 2 Position	
15	4460465	2	Socket, Female	
16	4460884	1	Plug, Male - 4 Position	
16	4460465	4	Socket, Female	
17	4460930	1	Plug, Male - 8 Position	
17	4460465	1	Socket, Female	
17	4460466	7	Seal, Terminal	
18	4460894	1	Plug, Male - 6 Position	
18	4460465	6	Socket, Female	

ITEM	PART NUMBER	QTY	DESCRIPTION	REV
19	1001142938	1	Connector - 2 Position	
19	1001142940	2	Terminal	
20	1001133714	1	Plug, Male - 4 Position	
20	1001133715	3	Terminal	
20	1001135651	1	Plug, Terminal	

FIGURE 8-27. ENGINE HARNESS - GM

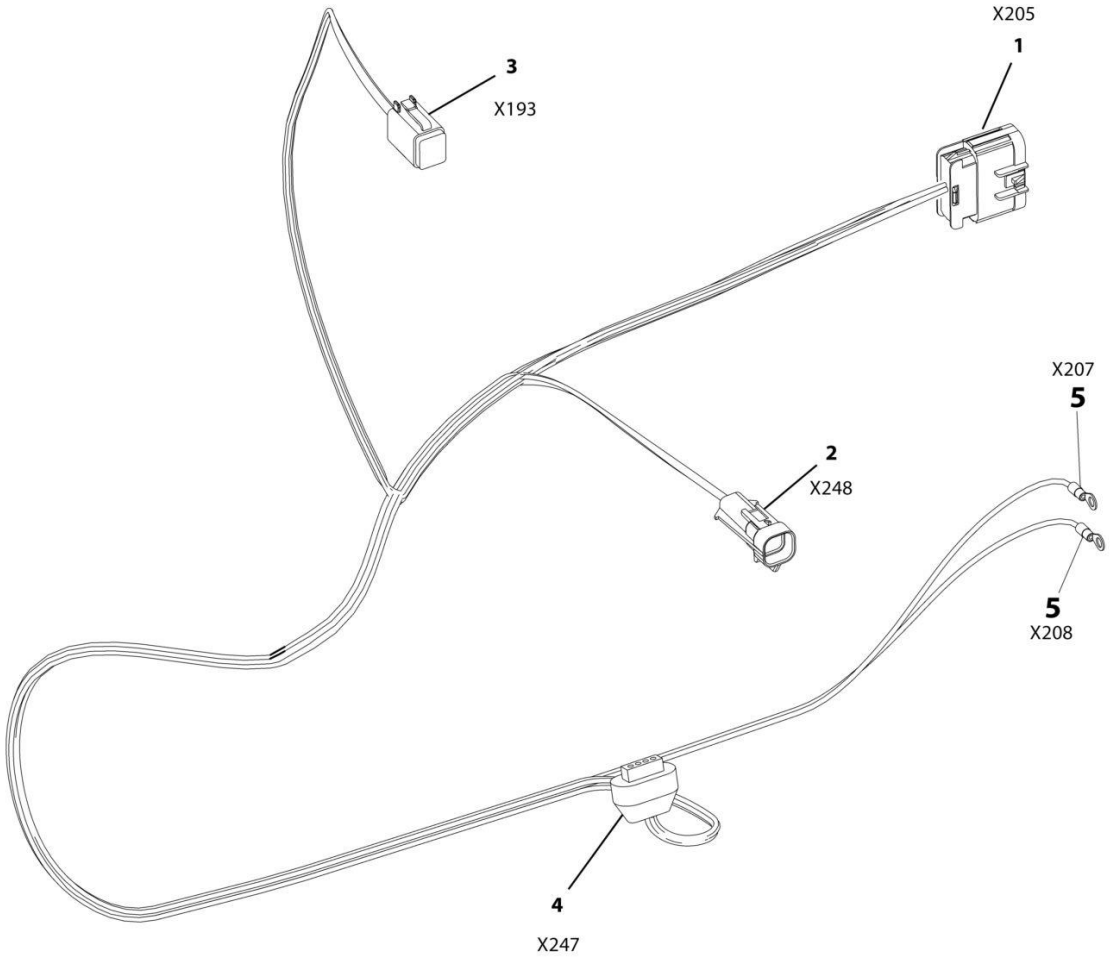

FIGURE 8-27. ENGINE HARNESS - GM

ITEM	PART NUMBER	QTY	DESCRIPTION	REV
	1001167112	Ref	ENGINE HARNESS - GM	A
1	4461109	1	Plug, Male - 16 Position	
1	4461111	7	Pin, Male	
2	4461124	1	Connector - 4 Position	
2	4460693	4	Terminal	
3	4460894	1	Plug, Male - 6 Position	
3	4460465	5	Socket, Female	
3	4460466	1	Plug, Terminal	
4	4461121	1	Plug, Male - 4 Position	
4	4461122	4	Terminal	
5	4460313	2	Terminal, Ring	

FIGURE 8-28. ENGINE HARNESS - KUBOTA

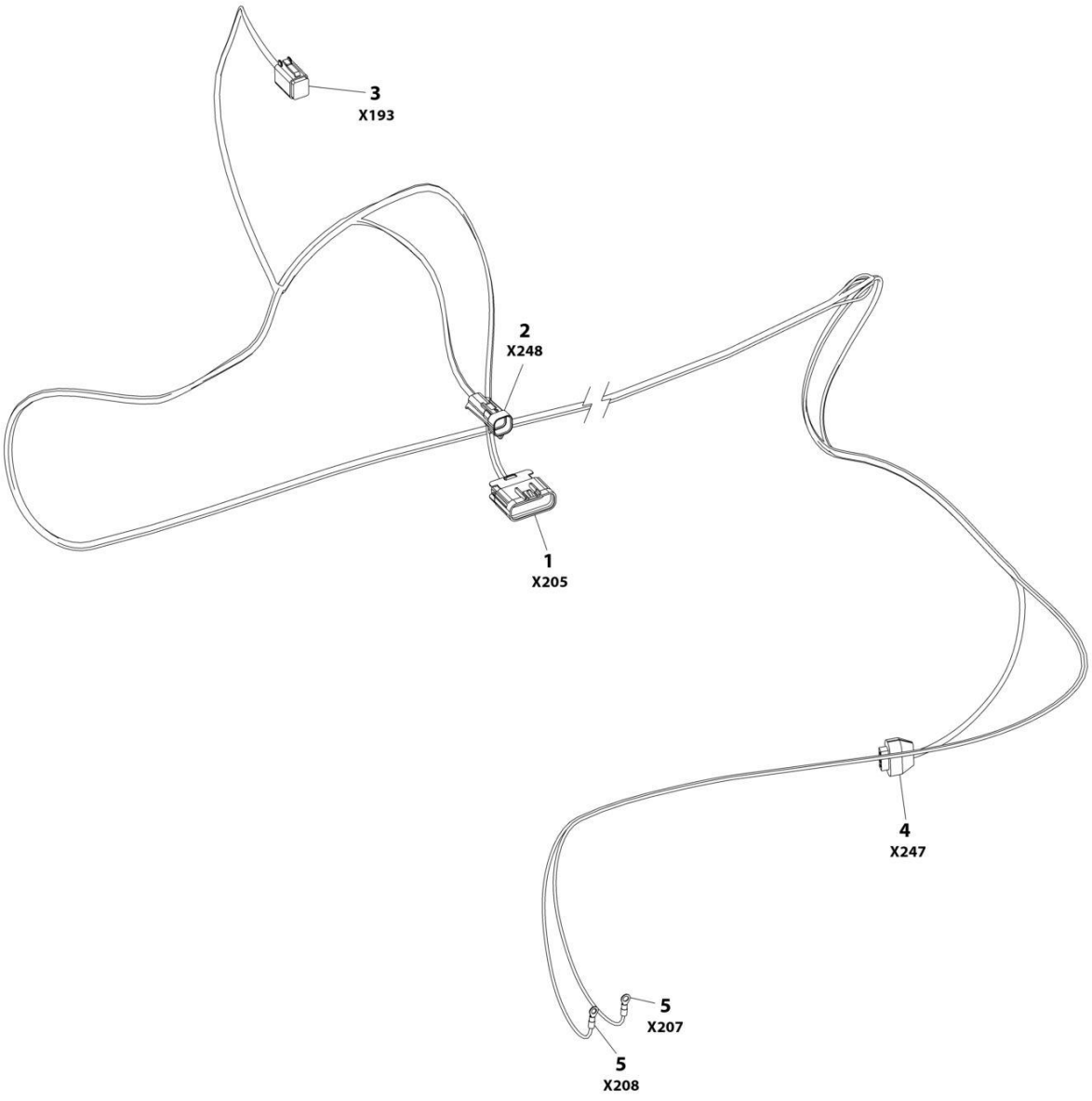

FIGURE 8-28. ENGINE HARNESS - KUBOTA

ITEM	PART NUMBER	QTY	DESCRIPTION	REV
	1001213599	Ref	ENGINE HARNESS - KUBOTA	C
1	4461109	1	Plug, Male - 16 Position	
1	4461111	7	Terminal	
1	4461113	9	Plug	
2	4461124	1	Connector - 4 Position	
2	4460693	4	Terminal	
3	4460894	1	Plug, Male - 6 Position	
3	4460465	5	Socket, Female	
3	4460466	1	Plug, Terminal	
4	4461121	1	Plug, Male - 4 Position	
4	4461122	4	Terminal	
4	4461123	4	Seal	
5	4460042	2	Terminal, Ring	

FIGURE 8-29. FUEL HARNESS - DEUTZ D2.9L4 ENGINE

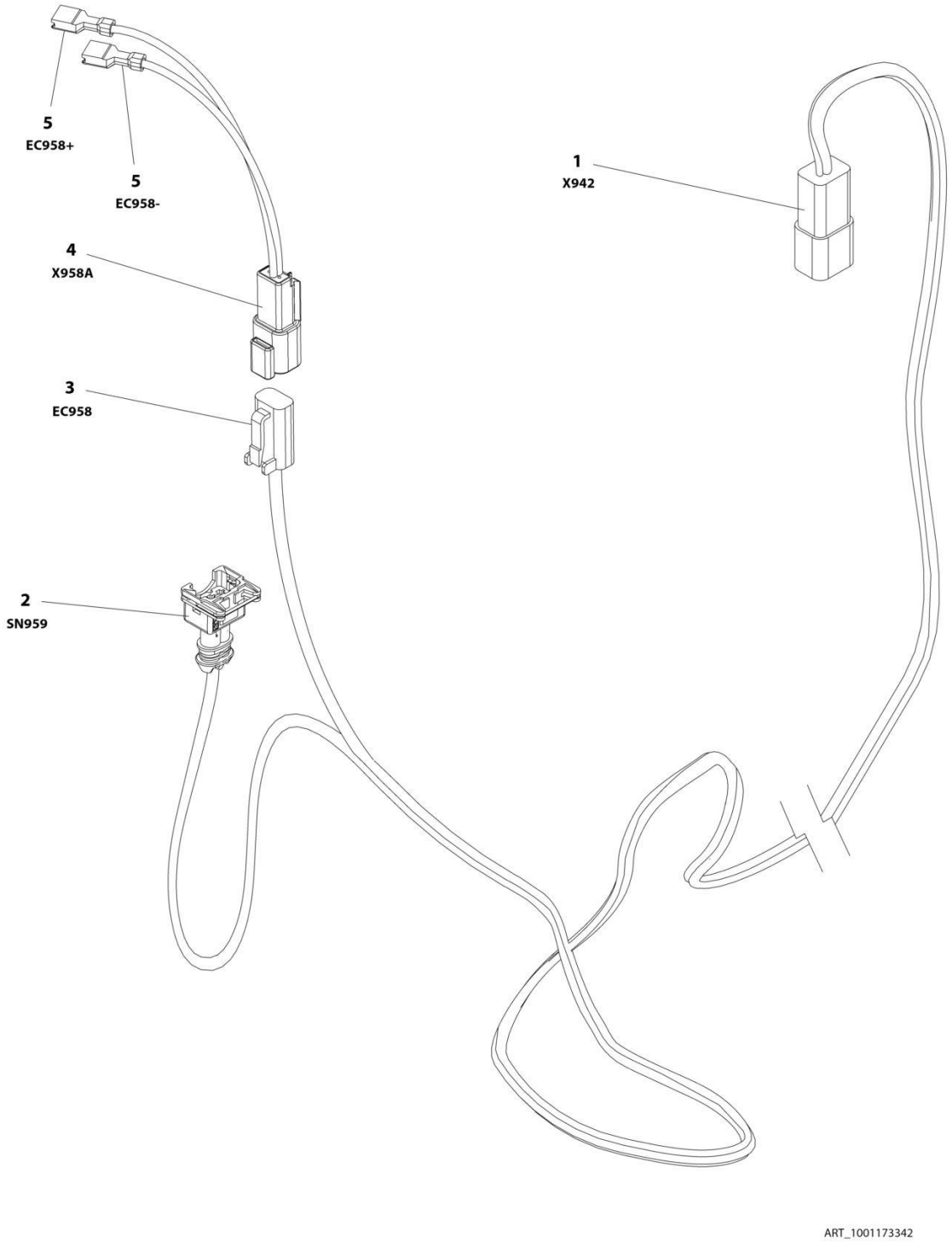

FIGURE 8-29. FUEL HARNESS - DEUTZ D2.9L4 ENGINE

ITEM	PART NUMBER	QTY	DESCRIPTION	REV
	1001173342	Ref	FUEL HARNESS - DEUTZ D2.9L4 ENGINE	C
1	4460932	1	Receptacle, Female - 4 Position	
1	4460464	2	Pin, Male	
1	4460941	2	Pin, Male	
2	1001116983	1	Plug, Male - 2 Position	
2	1001116710	2	Socket, Female	
3	4460891	1	Plug, Male - 2 Position	
3	4460942	2	Socket, Female	
4	4460897	1	Receptacle, Female - 2 Position	
4	4460941	2	Pin, Male	
5	4460042	2	Terminal, Ring **(SN 0300203771 through 0300234499)**	
5	8220051	2	Coupler, Female **(SN 0300234500 through 0300272360, Except SN 0300272174 through 0300272184)**	

FIGURE 8-30. FUEL HARNESS - KUBOTA ENGINE

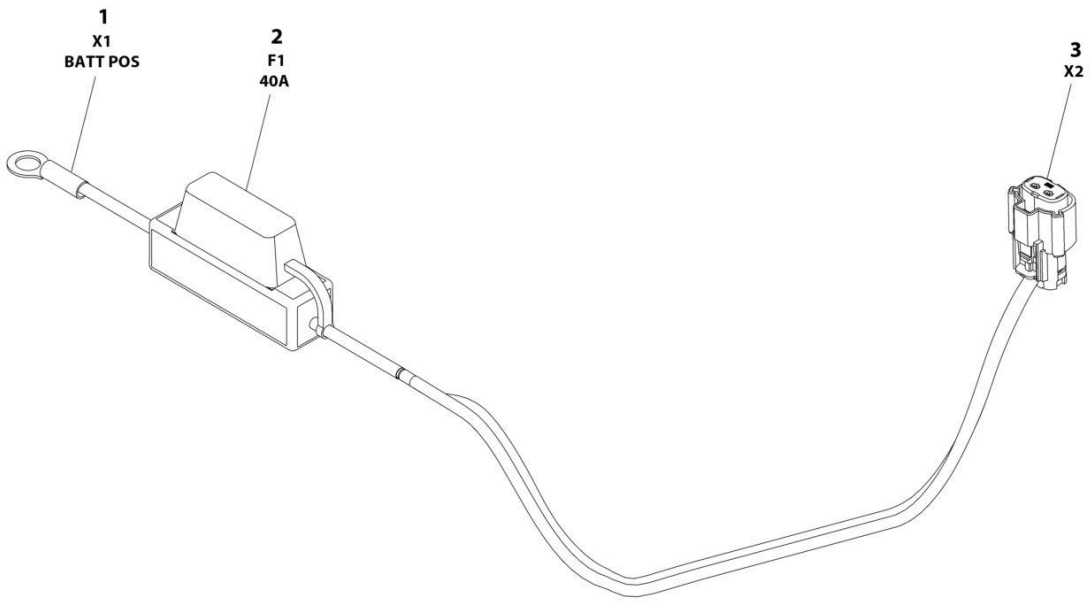

ART_1001229798

FIGURE 8-30. FUEL HARNESS - KUBOTA ENGINE

ITEM	PART NUMBER	QTY	DESCRIPTION	REV
	1001229798	Ref	FUEL HARNESS - KUBOTA ENGINE	A
1	4460977	1	Terminal, Ring	
2	2400082	1	Fuse 40Amp	
3	1001229795	1	Connector - 2 Position	
3	1001229796	1	Socket, Female	

FIGURE 8-31. GENERATOR HARNESS - 2500W

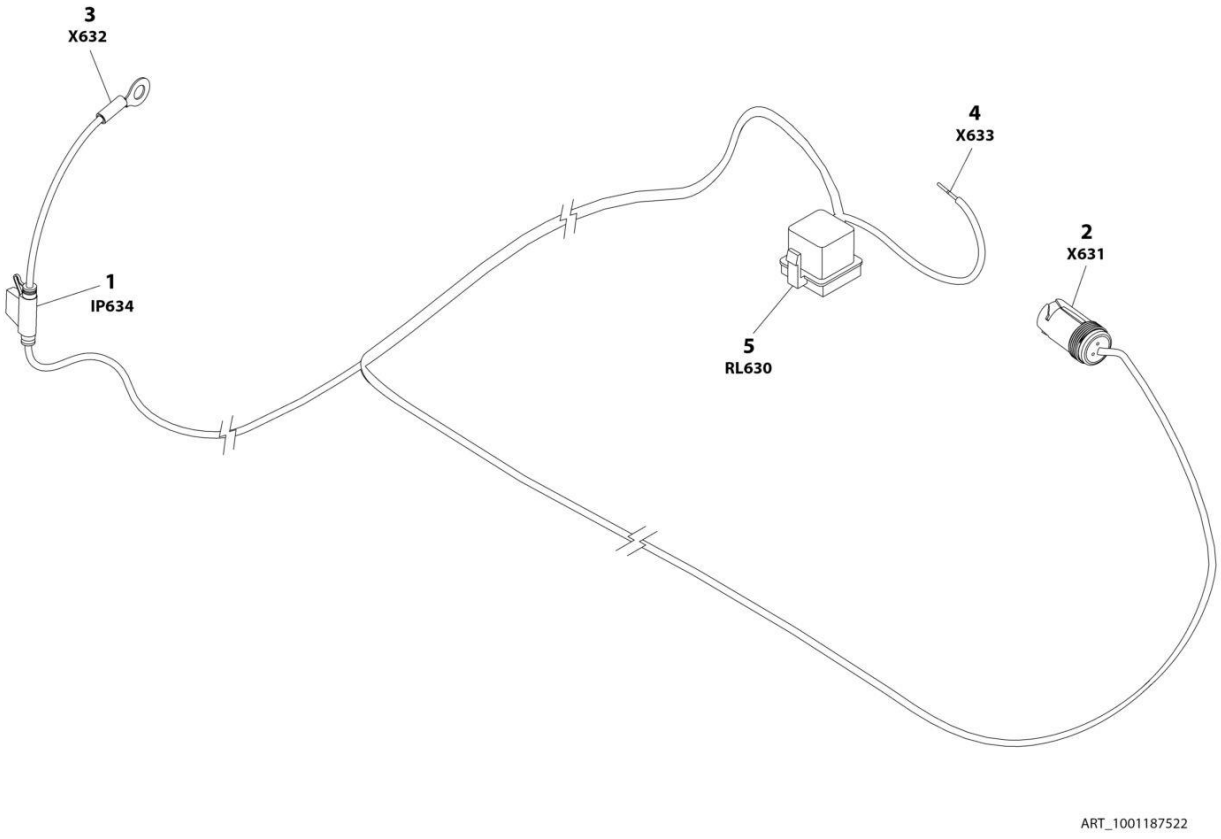

FIGURE 8-31. GENERATOR HARNESS - 2500W

ITEM	PART NUMBER	QTY	DESCRIPTION	REV
	1001187522	Ref	GENERATOR HARNESS - 2500W	B
1	2400060	1	Fuseholder - 30Amp (Includes Cover) **(SN 0300203771 through 0300241624, SN E300000100 through E300005869, SN 1300007289 through 1300007393)**	
1	2400066	1	Fuseholder - 30Amp (Includes Cover) **(SN 0300241625 through 0300272360, SN E300005870 through E300007988, Except SN 0300272174 through 0300272184, Excluding E300007847)**	
1	8229245	1	Fuse 30Amp	
2	1001154726	1	Receptacle, Female - 3 Position	
2	4460464	2	Pin, Male	
2	4460466	1	Plug, Terminal	
3	8220045	1	Terminal, Ring	
4	4460906	1	Socket, Female	
5	1001117057	1	Connector, Relay	
5	1001116734	2	Terminal	
5	1001116732	2	Terminal	
5	3740080	1	Relay	

FIGURE 8-32. GENERATOR HARNESS - 4000W

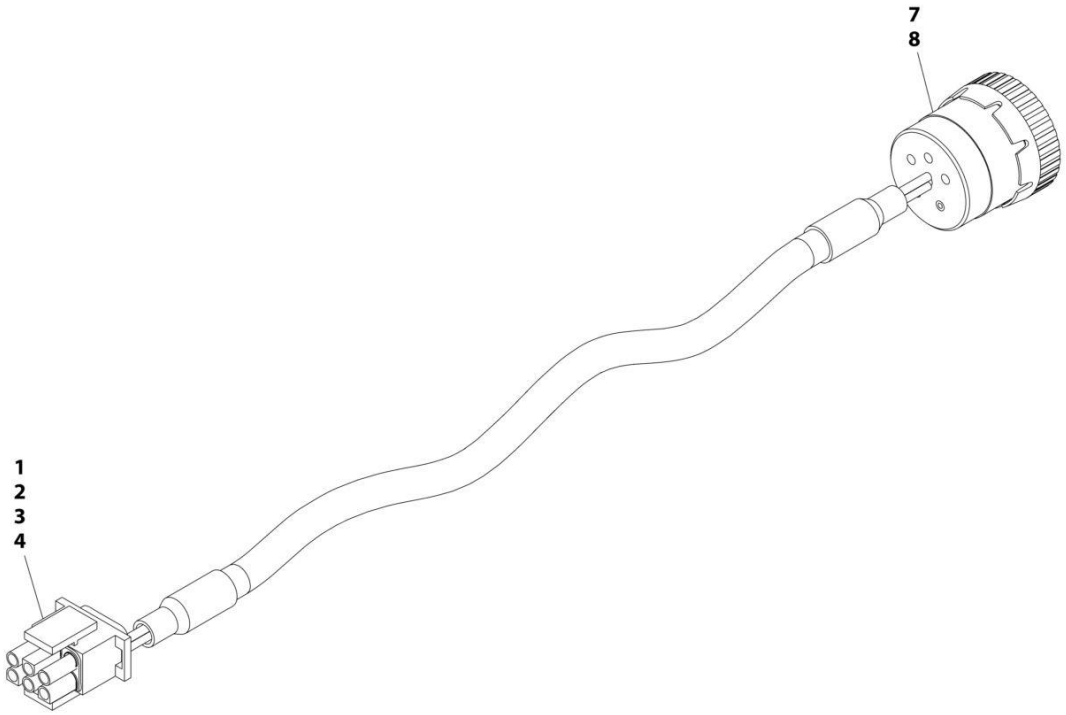

FIGURE 8-32. GENERATOR HARNESS - 4000W

ITEM	PART NUMBER	QTY	DESCRIPTION	REV
	1001152532	Ref	GENERATOR HARNESS	A
1	4460225	1	Connector - 6 Position	
2	4460268	2	Socket, Female	
3	4460807	1	Seal	
4	4460808	1	Seal	
7	4460465	2	Socket, Female	
8	77363233	1	Connector - 6 Position	

FIGURE 8-33. GROUND CONTROL BOX HARNESS

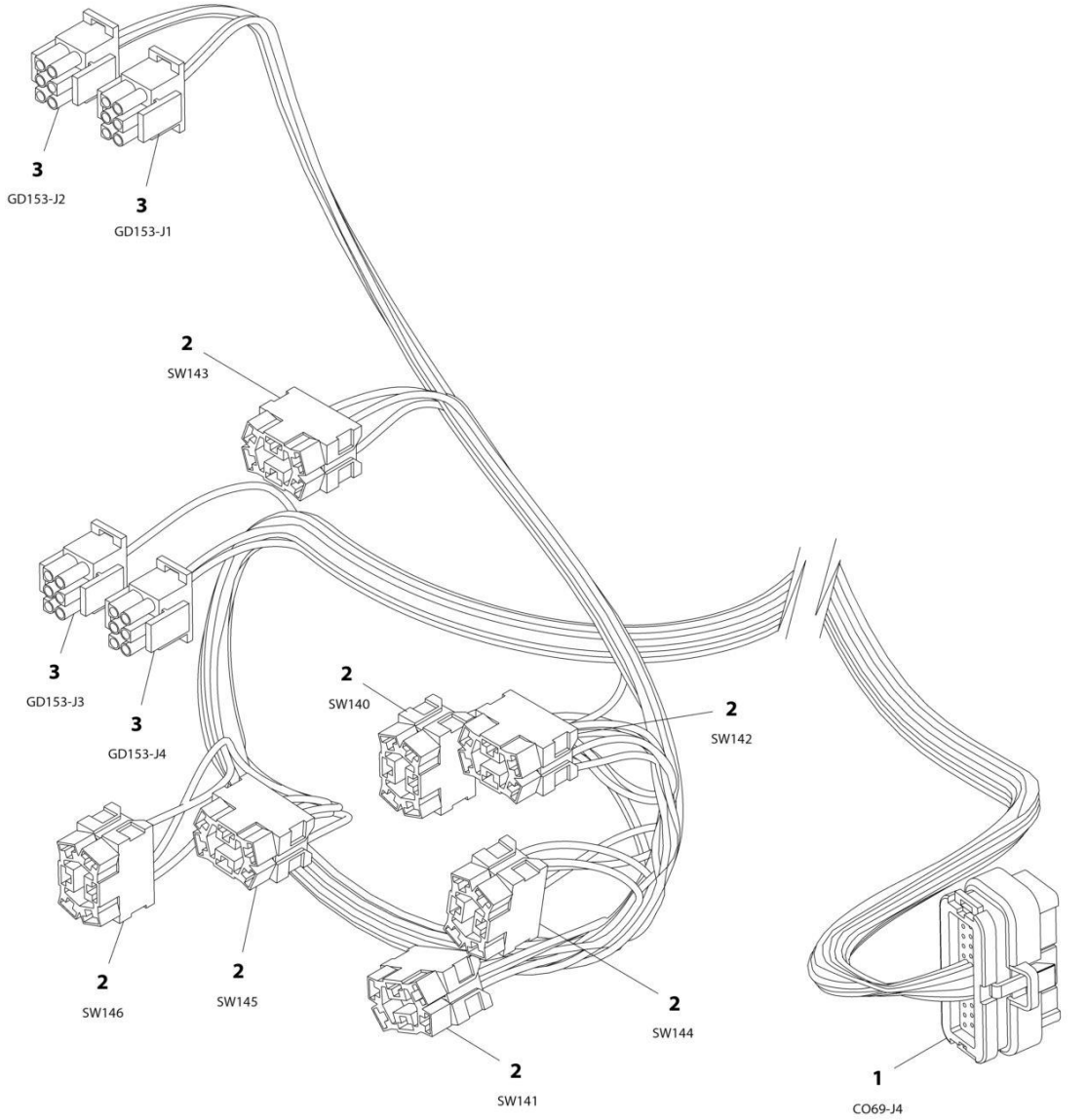

FIGURE 8-33. GROUND CONTROL BOX HARNESS

ITEM	PART NUMBER	QTY	DESCRIPTION	REV
	1001166964	Ref	GROUND CONTROL BOX HARNESS	C
1	4460876	1	Connector - 35 Position	
1	4460871	1	Socket, Female	
1	4460905	1	Plug, Terminal	
2	4460418	7	Connector - 6 Position	
2	4460419	27	Terminal	
3	4460225	4	Plug, Male - 6 Position	
3	4460268	9	Socket, Female	

FIGURE 8-34. INTERFACE HARNESS - WITH 1 CELL LSS

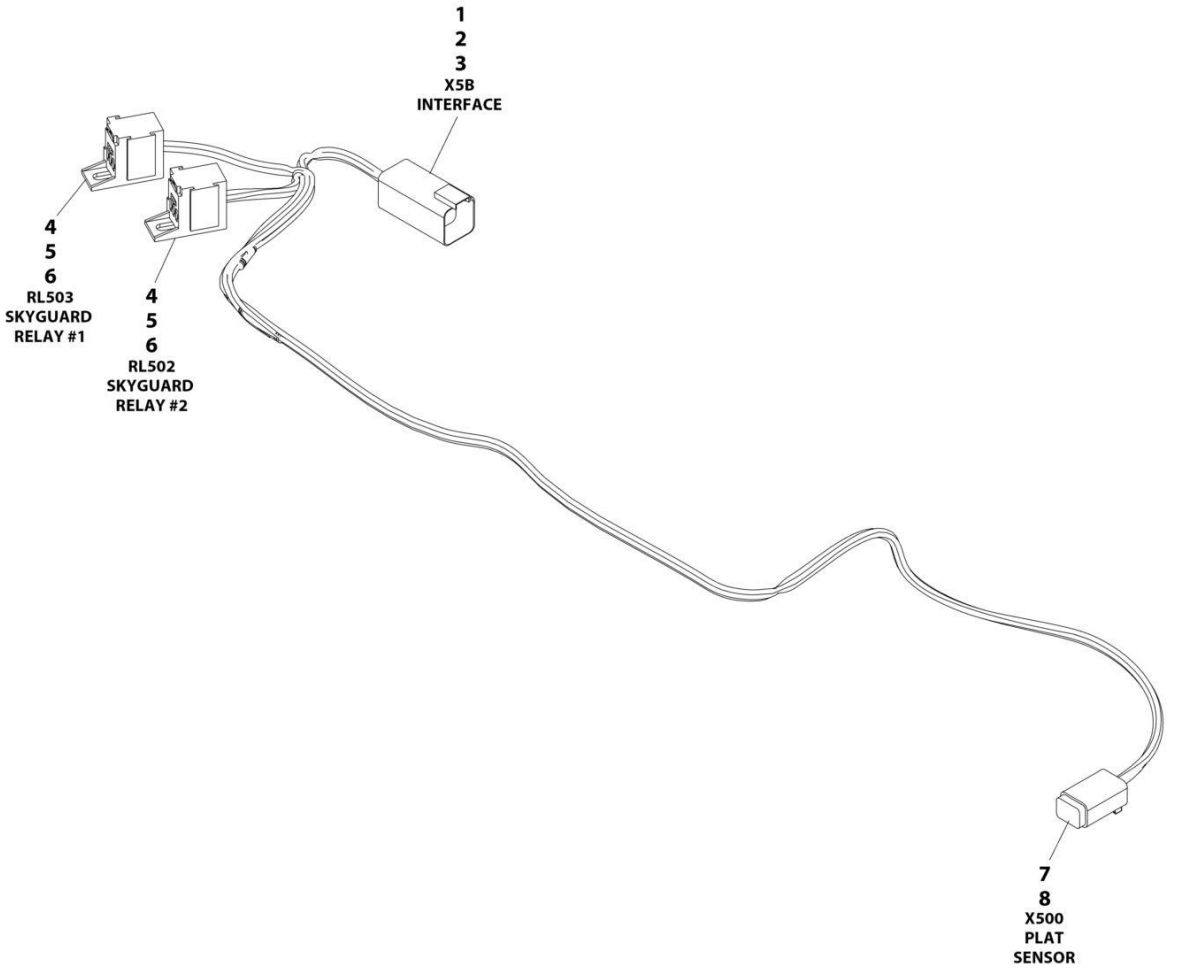

FIGURE 8-34. INTERFACE HARNESS - WITH 1 CELL LSS

ITEM	PART NUMBER	QTY	DESCRIPTION	REV
	1001225580	Ref	INTERFACE HARNESS - WITH 1 CELL LSS	D
1	4460899	1	Connector	
2	4460464	4	Terminal	
3	4460466	2	Plug	
4	1001186432	2	Connector	
5	1001116720	4	Terminal	
6	1001118388	4	Terminal	
7	4460884	1	Connector	
8	4460465	4	Terminal	

FIGURE 8-35. LSS HARNESS

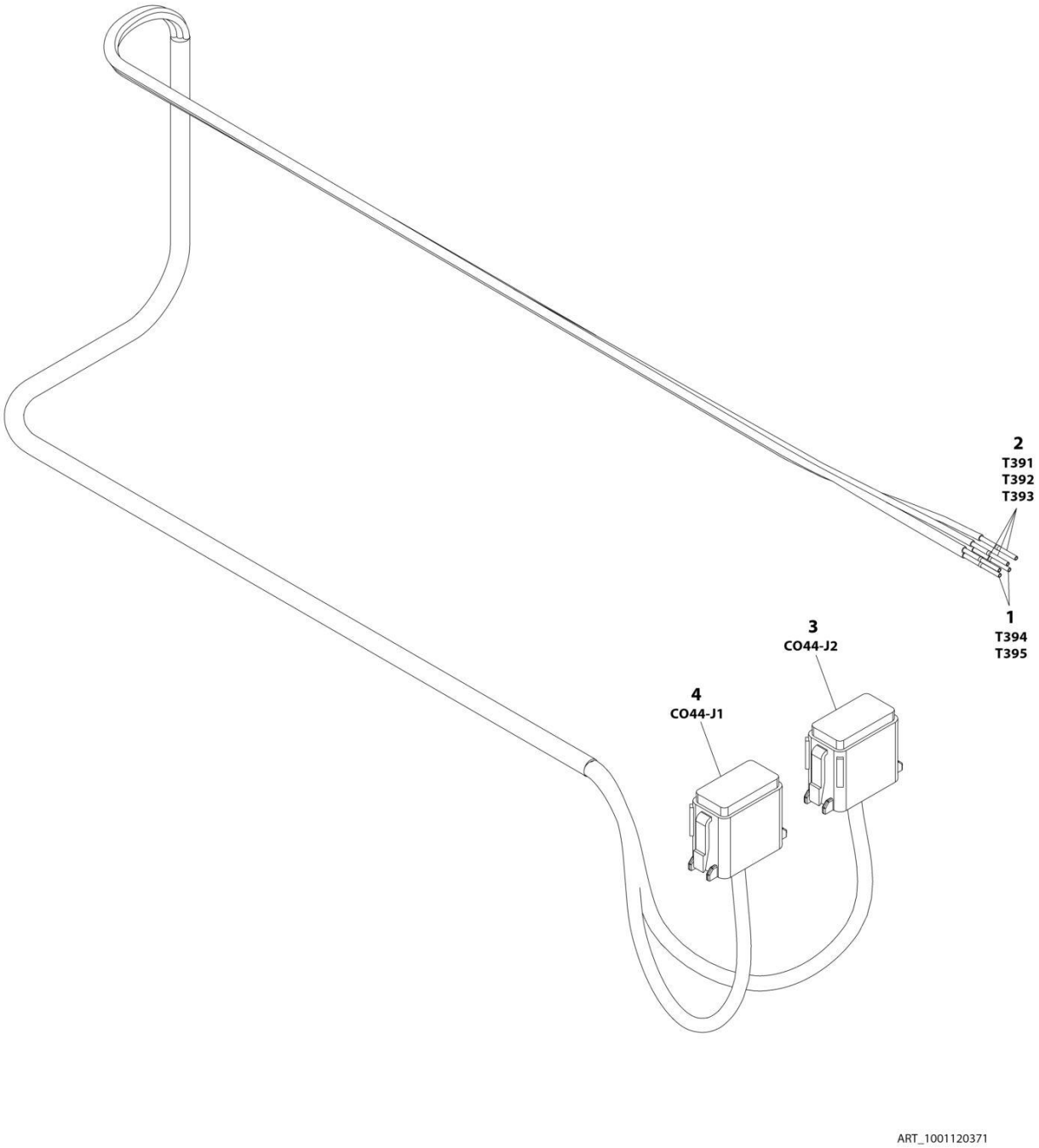

FIGURE 8-35. LSS HARNESS

ITEM	PART NUMBER	QTY	DESCRIPTION	REV
	1001120371	Ref	LSS HARNESS	B
1	4460465	2	Socket, Female	
2	4460944	3	Socket, Female	
3	4460836	1	Plug, Male - 12 Position	
3	4460466	9	Plug, Terminal	
3	4460944	3	Socket, Female	
3	0840055	1	Boot	
4	4460933	1	Plug, Male - 12 Position	
4	4460466	10	Plug, Terminal	
4	4460465	2	Socket, Female	
4	0840055	1	Boot	

FIGURE 8-36. PLATFORM CONSOLE BOX HARNESS (SN 0300203771 through 0300259126, SN E300000100 through E300007988, SN 1300007289 through 1300007393)

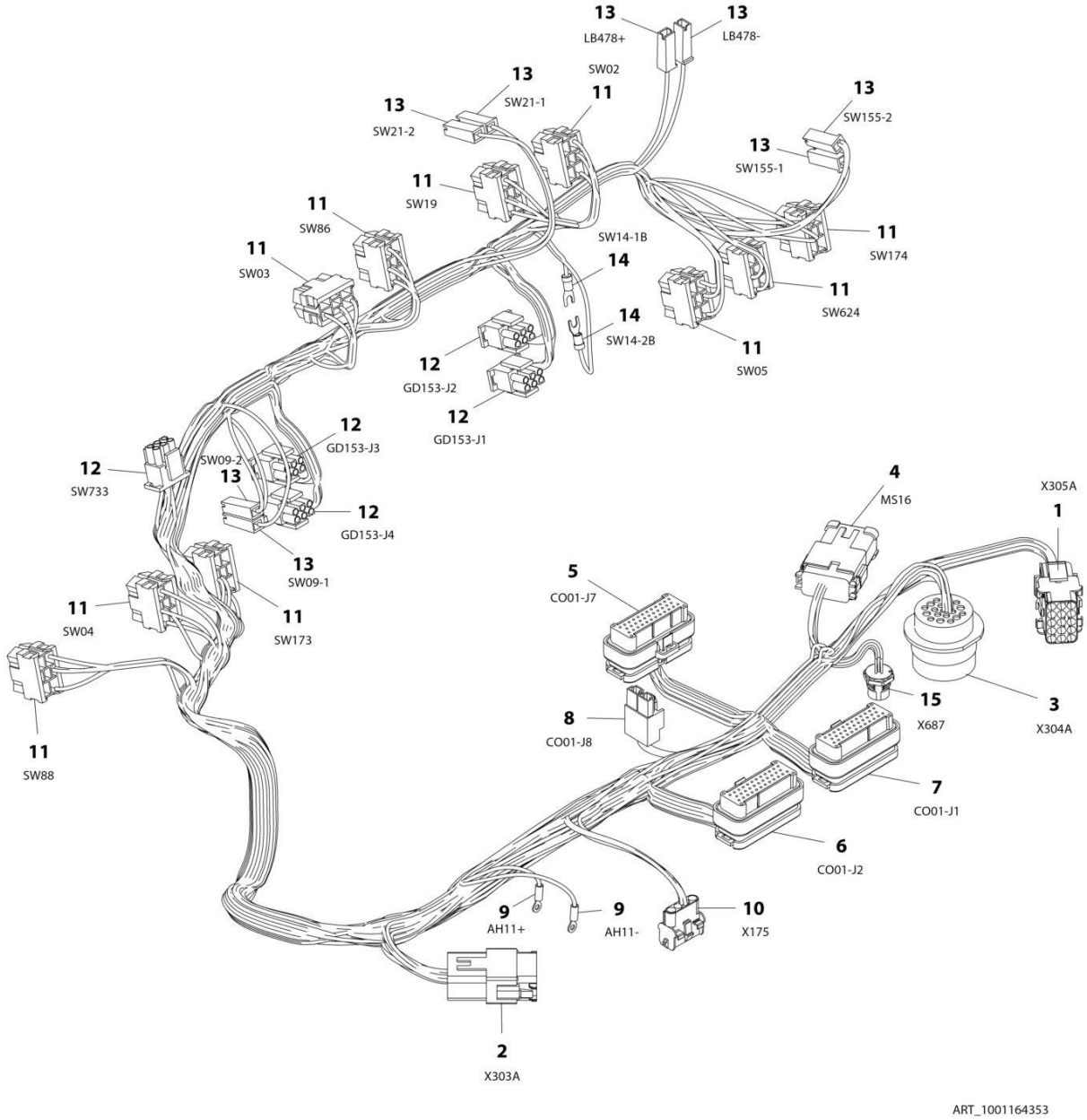

FIGURE 8-36. PLATFORM CONSOLE BOX HARNESS (SN 0300203771 through 0300259126, SN E300000100 through E300007988, SN 1300007289 through 1300007393)

ITEM	PART NUMBER	QTY	DESCRIPTION	REV
	1001164353	Ref	PLATFORM CONSOLE BOX HARNESS	I
1	4460434	1	Connector - 15 Position	
1	4460267	12	Pin. Male	
2	4460970	1	Receptacle, Female - 12 Position	
2	1001116693	11	Pin, Male	
2	4460466	1	Plug, Terminal	
2	4460933	1	Plug, Male - 12 Position	
3	4460866	1	Connector - 19 Position	
3	4460464	7	Pin, Male	
3	4460466	12	Plug, Terminal	
4	4460933	1	Plug, Male - 12 Position	
4	4460465	6	Socket, Female	
4	4460466	6	Plug, Terminal	
4	1001119020	1	Bussbar - 12 Position	
5	4460873	1	Connector - 35 Position	
5	4460871	21	Socket, Female	
5	4460905	14	Plug, Terminal	
6	4460875	1	Connector - 35 Position	
6	4460871	23	Socket, Female	
6	4460905	8	Plug, Terminal	
7	4460874	1	Connector - 35 Position	
7	4460871	25	Socket, Female	
7	4460905	10	Plug, Terminal	
8	4460879	1	Plug, Male - 2 Position	
8	4460887	2	Terminal	
9	1001098122	2	Terminal, Ring	
10	4460761	1	Receptacle, Female - 4 Position	
10	4460267	4	Pin, Male	
11	4460418	10	Connector - 6 Position	
11	4460419	35	Terminal	
11	4460259	6	Terminal (Note: Used only on Fuel Select)	
12	4460225	1	Plug, Male - 6 Position	
12	4460227	5	Pin, Male (Note: Used on Pump Potentiometer Connection Only)	
12	4460226	19	Socket, Female	
13	4460260	8	Housing, Terminal **(SN 0300203771 through 0300222801)**	
13	4460259	8	Terminal **(SN 0300203771 through 0300222801)**	
13	4460016	2	Housing, Terminal **(SN 0300222802 through 0300259126, SN E300000100 through E300007988, SN 1300007289 through 1300007393, Excluding E300007847)**	
13	See Note	NSS	Terminal (Note: Purchase p/n 4460016) **(SN 0300222802 through 0300259126, SN E300000100 through E300007988, SN 1300007289 through 1300007393, Excluding E300007847)**	
14	4460183	2	Terminal, Fork	
15	1001213447	1	Connector - 4 Position **(SN 0300222802 through 0300259126, SN E300000100 through E300007988, SN 1300007289 through 1300007393, Excluding E300007847)**	
15	See Note	NSS	Terminal (Note: Purchase p/n 1001213447) **(SN 0300222802 through 0300259126, SN E300000100 through E300007988, SN 1300007289 through 1300007393, Excluding E300007847)**	

FIGURE 8-37. PLATFORM CONSOLE BOX HARNESS (SN 0300259127 through 0300272360)

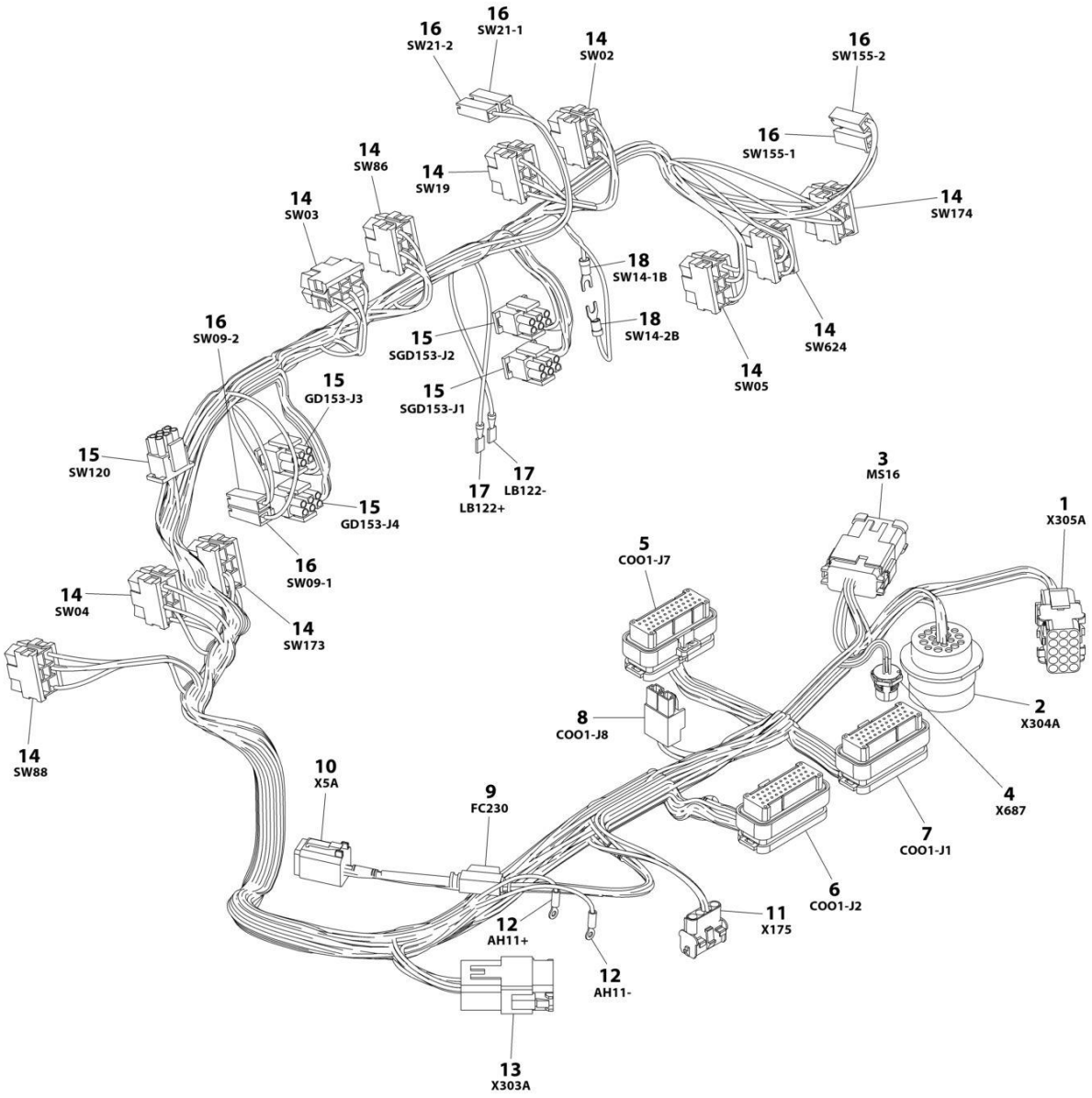

ART_1001243168

FIGURE 8-37. PLATFORM CONSOLE BOX HARNESS (SN 0300259127 through 0300272360)

ITEM	PART NUMBER	QTY	DESCRIPTION	REV
	1001243168	Ref	PLATFORM CONSOLE BOX HARNESS	A
1	4460434	1	Connector - 15 Position	
1	4460267	8	Pin. Male	
1	4460708	1	Connector - 15 Position	
2	4460866	1	Connector - 19 Position	
2	4460464	7	Pin, Male	
2	4460466	12	Plug, Terminal	
3	4460933	1	Plug, Male - 12 Position	
3	4460465	8	Socket, Female	
3	4460466	4	Plug, Terminal	
3	1001125677	1	Bussbar - 12 Position	
4	1001213447	1	Connector - 5 Position	
5	4460873	1	Connector - 35 Position	
5	4460871	21	Socket, Female	
5	4460905	14	Plug, Terminal	
6	4460875	1	Connector - 35 Position	
6	4460871	23	Socket, Female	
6	4460905	8	Plug, Terminal	
7	4460874	1	Connector - 35 Position	
7	4460871	26	Socket, Female	
7	4460905	9	Plug, Terminal	
8	4460879	1	Plug, Male - 2 Position	
8	4460887	2	Terminal	
9	4460260	1	Housing, Terminal	
9	8229242	1	Fuse 5Amp	
10	4460894	1	Plug, Male - 6 Position	
10	4460465	6	Socket, Female	
11	4460761	1	Receptacle, Female - 4 Position	
11	4460267	4	Pin, Male	
12	1001098122	2	Terminal, Ring	
13	4460970	1	Receptacle, Female - 12 Position	
13	1001116693	11	Pin, Male	
13	4460466	1	Plug, Terminal	
13	4460933	1	Plug, Male - 12 Position	
14	4460418	6	Connector - 6 Position	
14	4460419	22	Terminal	
14	4460259	6	Terminal (Note: Used only on Fuel Select)	
15	4460225	3	Plug, Male - 6 Position	
15	4460227	4	Pin, Male (Note: Used on Pump Potentiometer Connection Only)	
15	4460226	11	Socket, Female	
16	4460260	5	Housing, Terminal	
16	4460259	7	Terminal	
17	4460016	2	Terminal, Receptacle	
18	4460183	2	Terminal, Fork	

FIGURE 8-38. RECEPTACLE BOX KIT - 110V IEC YELLOW (CE SPEC)

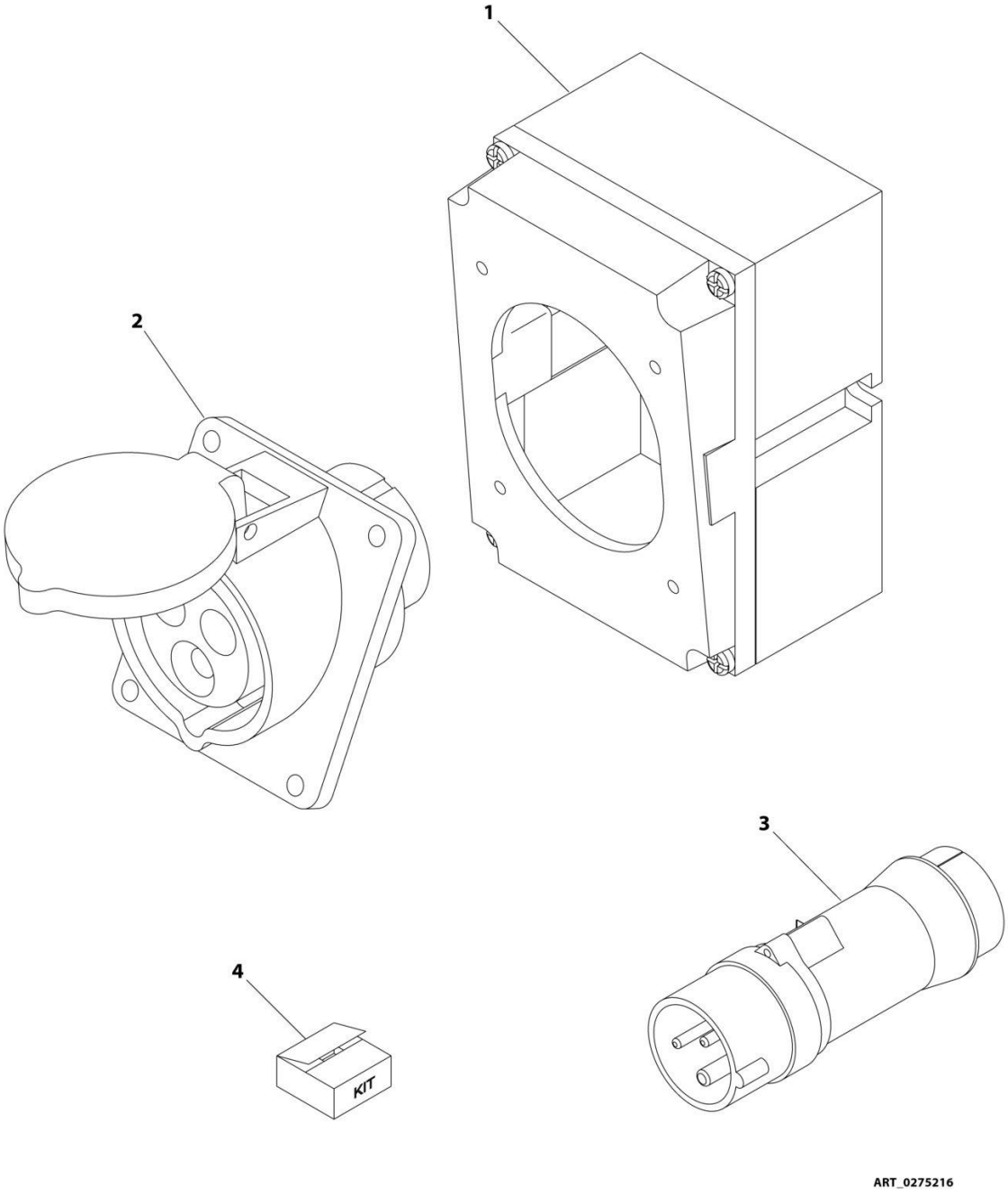

FIGURE 8-38. RECEPTACLE BOX KIT - 110V IEC YELLOW (CE SPEC)

ITEM	PART NUMBER	QTY	DESCRIPTION	REV
	0275216	Ref	RECEPTACLE BOX KIT - 110V IEC YELLOW (CE SPEC)	1
1	0861781	1	Box, Switch	
2	4461198	1	Receptacle	
3	4461196	1	Plug, Male	
4	1001100341	1	Plug and Socket Kit (Includes Items 1-3 and Female Plug p/n 4461197)	

FIGURE 8-39. RECEPTACLE BOX KIT - 220V IEC BLUE (CE SPEC)

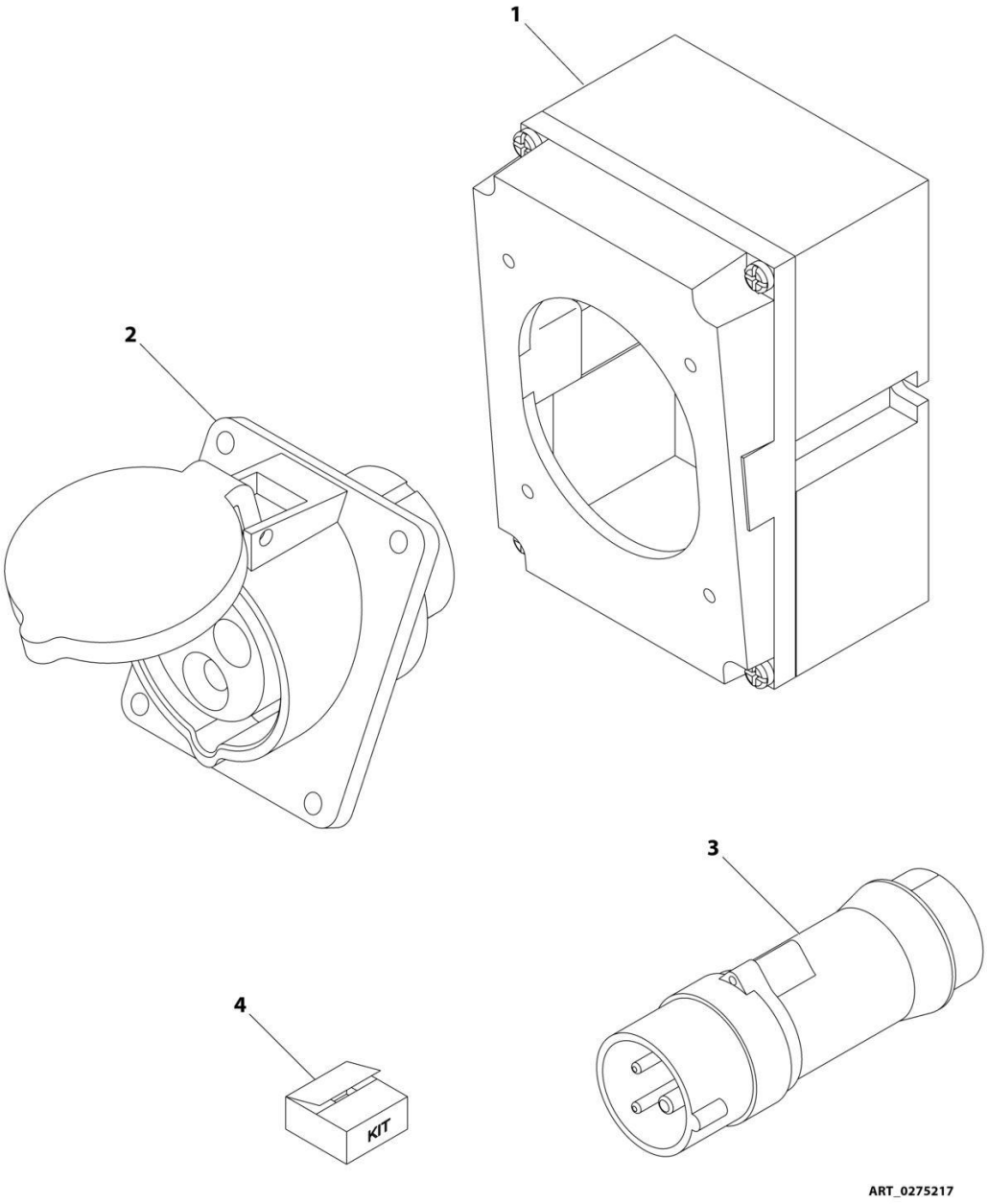

FIGURE 8-39. RECEPTACLE BOX KIT - 220V IEC BLUE (CE SPEC)

ITEM	PART NUMBER	QTY	DESCRIPTION	REV
	0275217	Ref	RECEPTACLE BOX KIT - 220V IEC BLUE (CE SPEC)	1
1	0861781	1	Box, Switch	
2	4461201	1	Receptacle	
3	4461199	1	Plug, Male	
4	1001100342	1	Plug and Socket Kit (Includes Items 1-3 and Female Plug p/n 4461200)	

FIGURE 8-40. RECEPTACLE BOX KIT - 220V CEE7 POST GROUND 70MM X 70MM (CE SPEC) (SN 0300203771 through 0300208696)

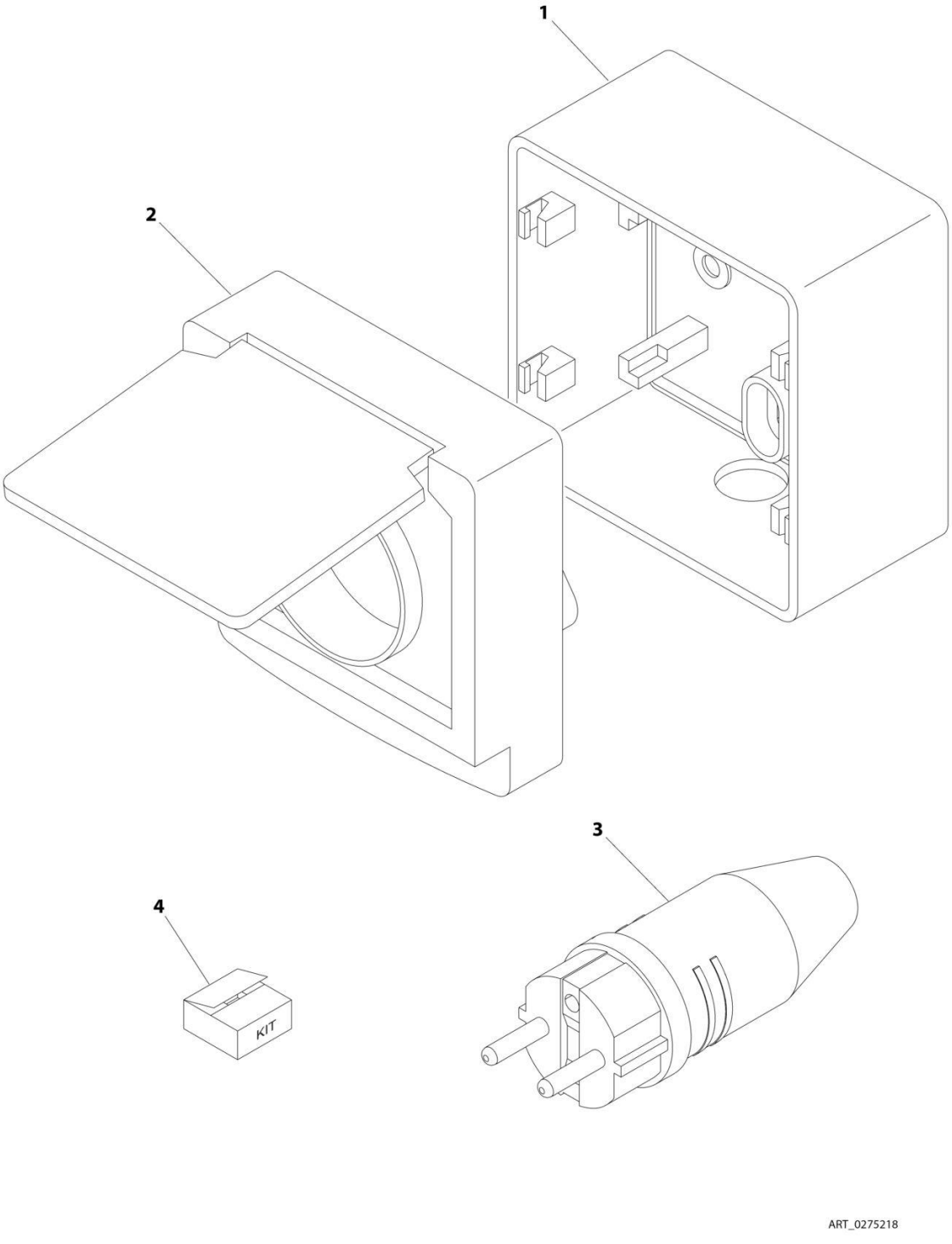

FIGURE 8-40. RECEPTACLE BOX KIT - 220V CEE7 POST GROUND 70MM X 70MM (CE SPEC) (SN 0300203771 through 0300208696)

ITEM	PART NUMBER	QTY	DESCRIPTION	REV
	0275218	Ref	RECEPTACLE BOX KIT - 220V CEE7 POST GROUND 70MM X 70MM BOX (CE SPEC) **(SN 0300203771 through 0300208696)**	C
1	1001141967	1	Box, Switch	
2	1001141968	1	Receptacle	
3	4461202	NLA	Plug, Male (Use p/n 4461205) **(SN 0300203771 through 0300218460)**	
3	4461205	1	Plug, Male **(SN 0300218461 through 0300272360, Except SN 0300272174 through 0300272184)**	
4	1001141971	1	Plug and Socket Kit (Includes Items 1-3 and Female Plug p/n 4461206)	

FIGURE 8-41. RECEPTACLE BOX KIT - 220V CEE7 POST GROUND 2IN X 4IN (CE SPEC)

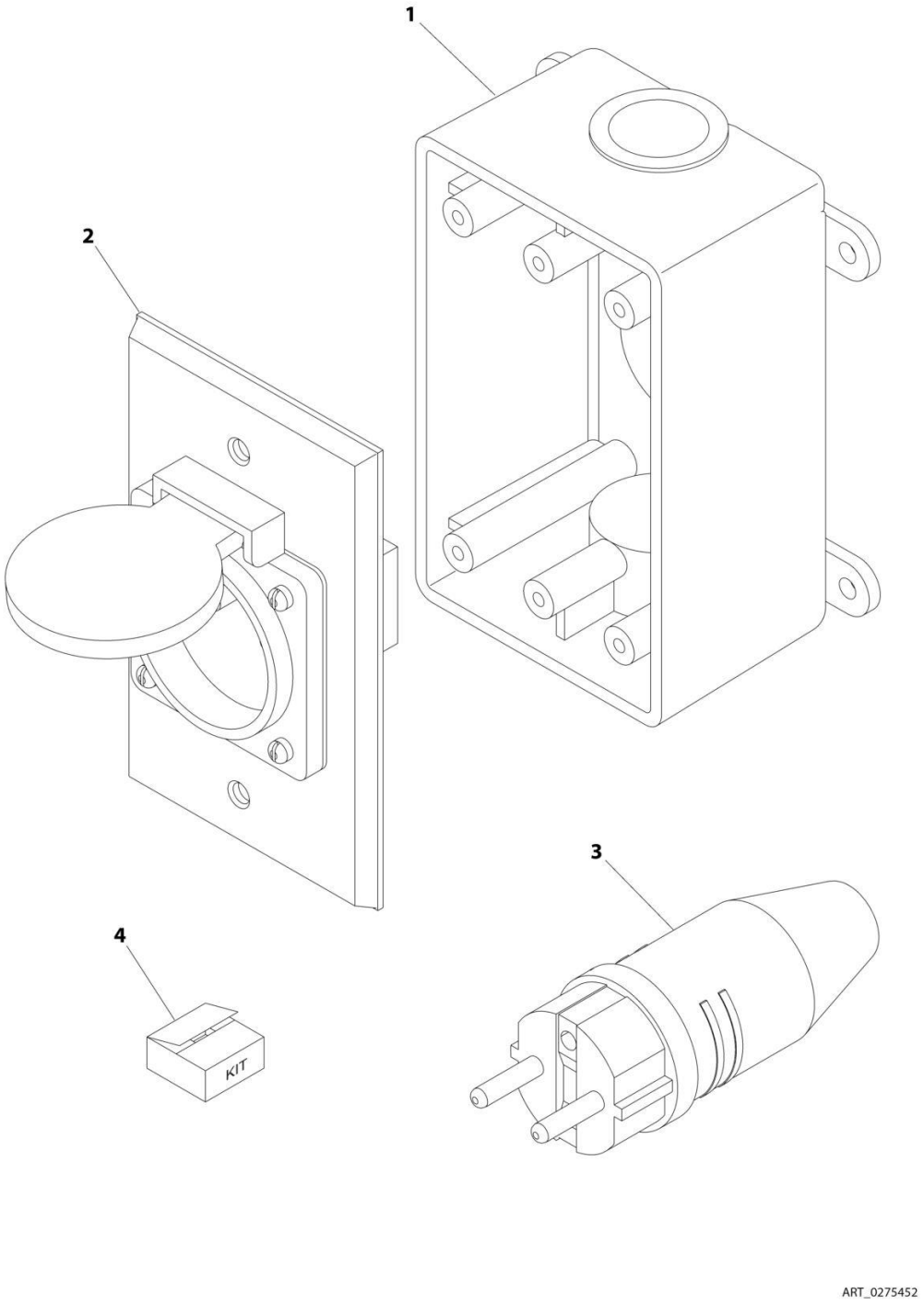

FIGURE 8-41. RECEPTACLE BOX KIT - 220V CEE7 POST GROUND 2IN X 4IN (CE SPEC)

ITEM	PART NUMBER	QTY	DESCRIPTION	REV
	0275452	Ref	RECEPTACLE BOX KIT - 220V CEE7 POST GROUND 2IN X 4IN BOX (CE SPEC)	C
1	0861731	1	Box, Switch	
2	4461244	1	Receptacle	
3	4461202	NLA	Plug, Male (Use p/n 4461205) **(SN 0300203771 through 0300218460)**	
3	4461205	1	Plug, Male **(SN 0300218461 through 0300272360, Except SN 0300272174 through 0300272184)**	
4	1001100345	1	Plug and Socket Kit (Includes Items 1-3 and Female Plug p/n 4461206)	

FIGURE 8-42. RECEPTACLE BOX KIT - 220V CEE7 SIDE GROUND 70MM X 70MM (CE SPEC) (SN 0300203771 through 0300208696)

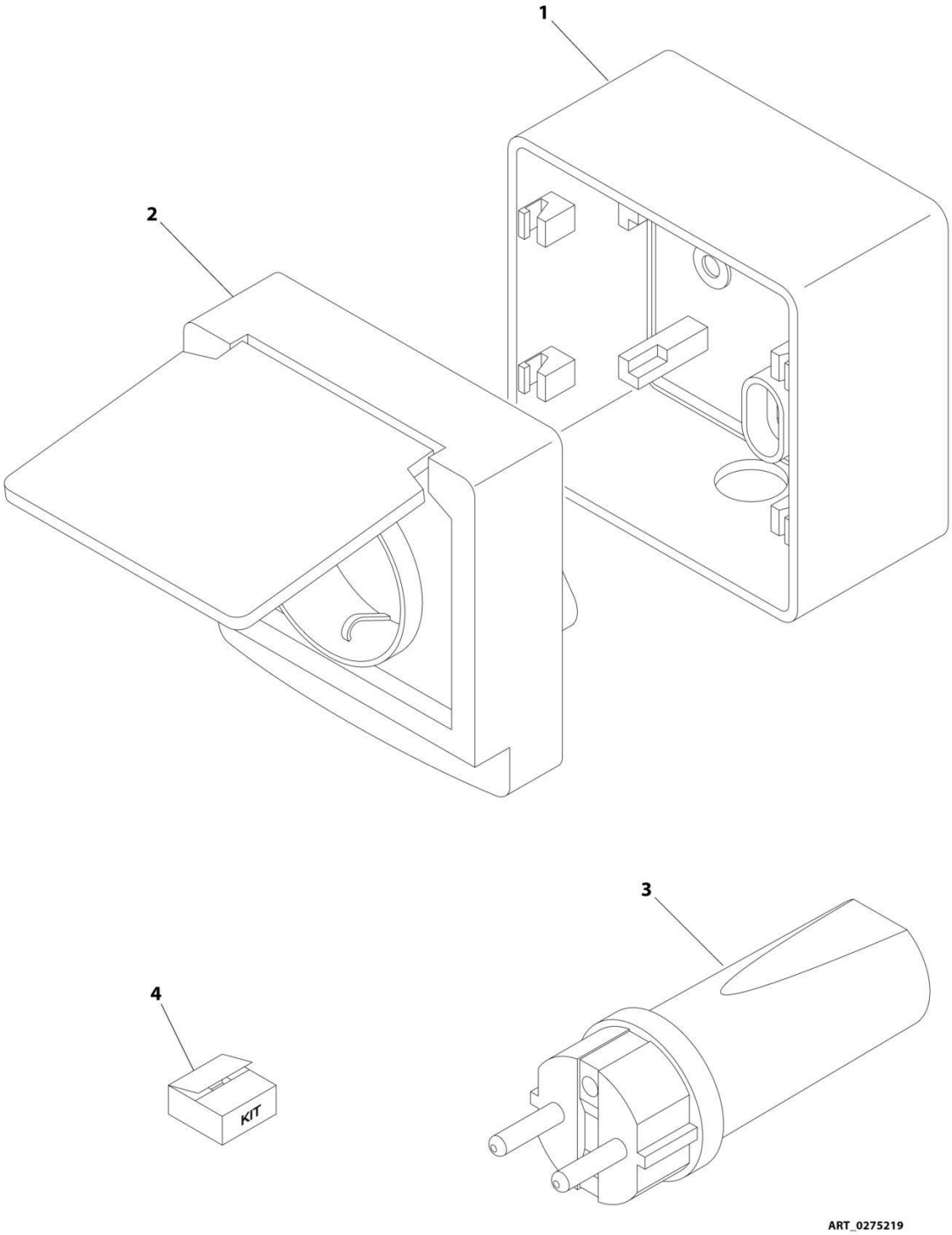

FIGURE 8-42. RECEPTACLE BOX KIT - 220V CEE7 SIDE GROUND 70MM X 70MM (CE SPEC) (SN 0300203771 through 0300208696)

ITEM	PART NUMBER	QTY	DESCRIPTION	REV
	0275219	Ref	RECEPTACLE BOX KIT - 220V CEE7 SIDE GROUND 70MM X 70MM BOX (CE SPEC) **(SN 0300203771 through 0300208696)**	B
1	1001141967	1	Box, Switch	
2	1001141969	1	Receptacle	
3	4461205	1	Plug, Male	
4	1001141970	1	Plug and Socket Kit (Includes Items 1-3 and Female Plug p/n 4461206)	

FIGURE 8-43. RECEPTACLE BOX KIT - 220V CEE7 SIDE GROUND 2IN X 4IN (CE SPEC)

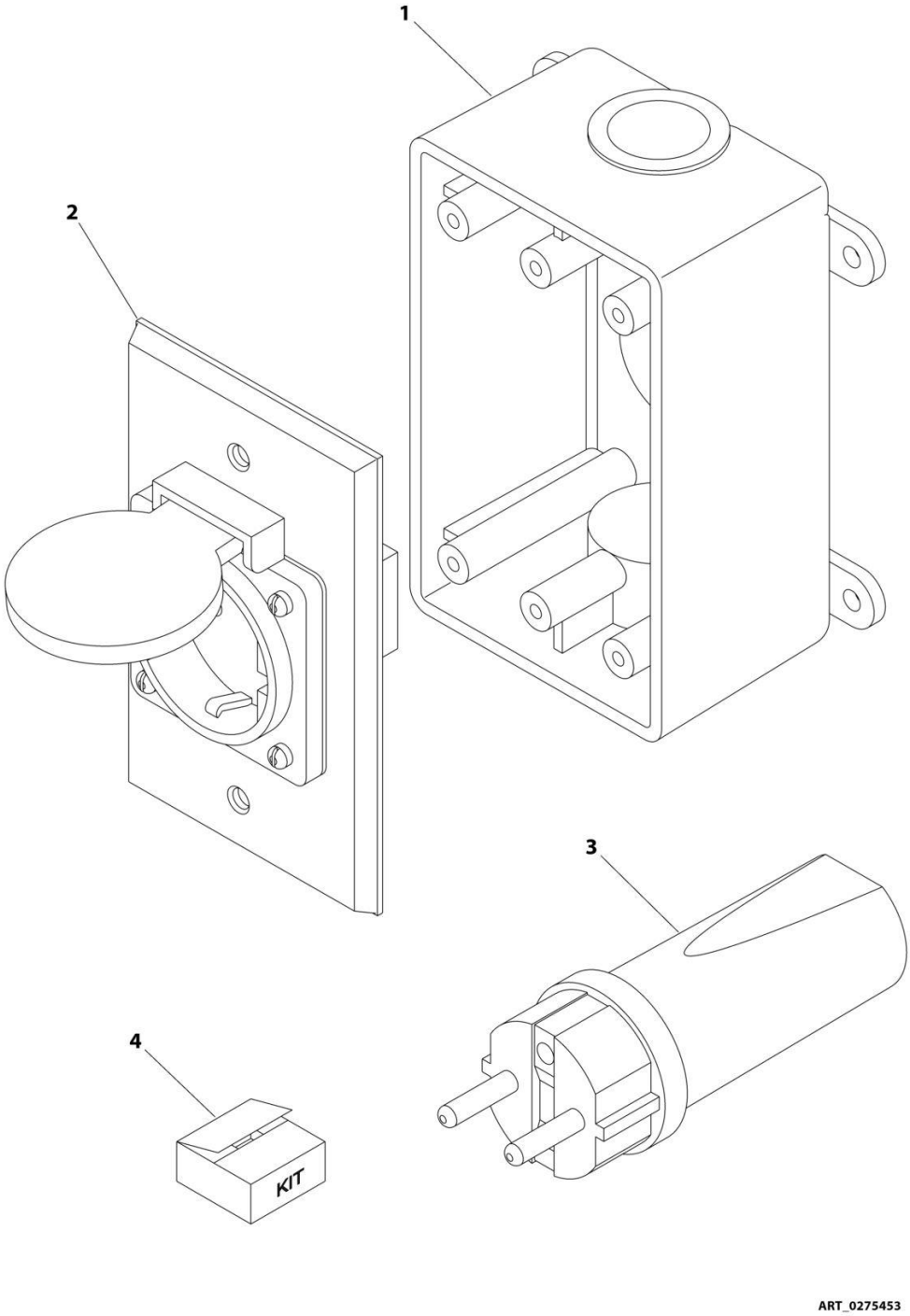

FIGURE 8-43. RECEPTACLE BOX KIT - 220V CEE7 SIDE GROUND 2IN X 4IN (CE SPEC)

ITEM	PART NUMBER	QTY	DESCRIPTION	REV
	0275453	Ref	RECEPTACLE BOX KIT - 220V CEE7 SIDE GROUND 2IN X 4IN BOX (CE SPEC)	1
1	0861731	1	Box, Switch	
2	4461245	1	Receptacle	
3	4461205	1	Plug, Male	
4	1001100347	1	Plug and Socket Kit (Includes Items 1-3 and Female Plug p/n 4461206)	

FIGURE 8-44. RECEPTACLE BOX KIT - 220V AFSINT 107 (CE SPEC)

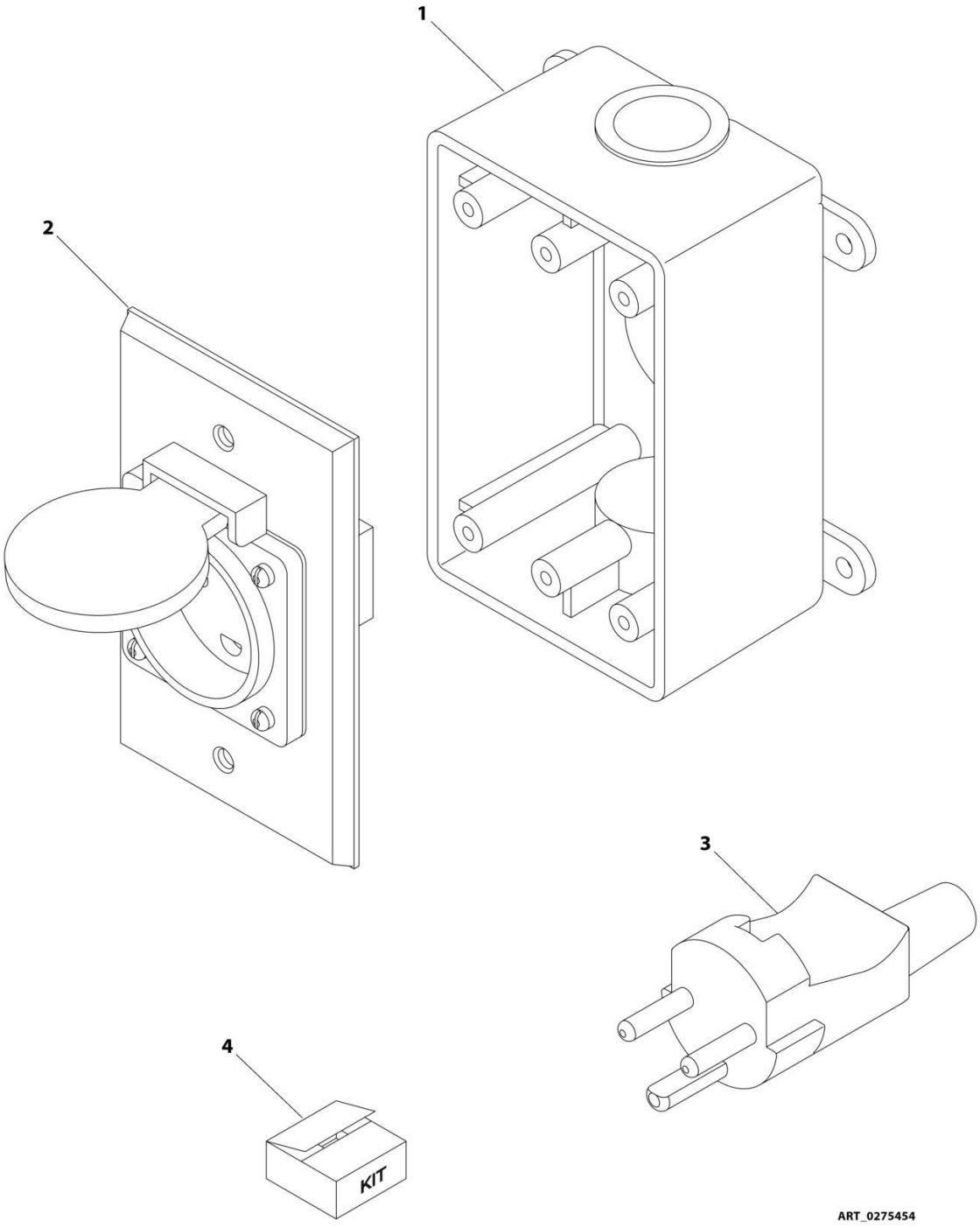

FIGURE 8-44. RECEPTACLE BOX KIT - 220V AFSINT 107 (CE SPEC)

ITEM	PART NUMBER	QTY	DESCRIPTION	REV
	0275454	Ref	RECEPTACLE BOX KIT - 220V AFSINT 107 (CE SPEC)	1
1	0861731	1	Box, Switch	
2	4461246	1	Receptacle	
3	4461249	1	Plug, Male	
4	1001100346	1	Plug and Socket Kit (Includes Items 1-3 and Female Plug p/n 4461250)	

FIGURE 8-45. SKYGUARD HARNESS

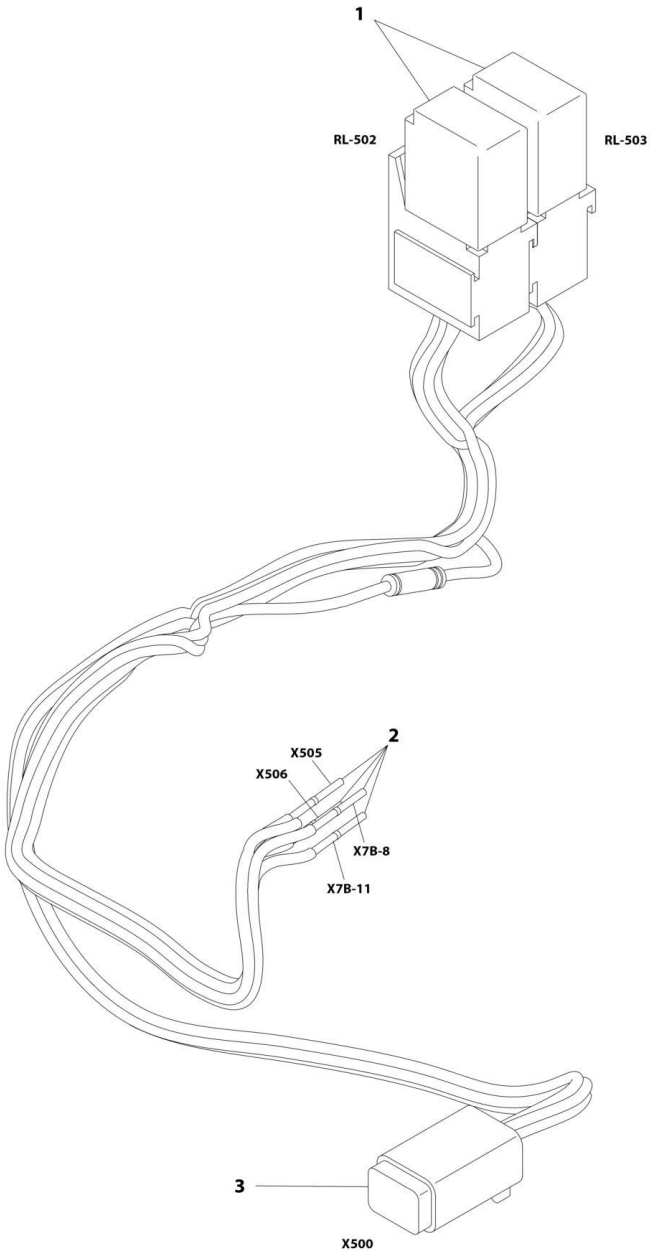

FIGURE 8-45. SKYGUARD HARNESS

ITEM	PART NUMBER	QTY	DESCRIPTION	REV
	1001192292	Ref	SKYGUARD HARNESS	B
1	1001186432	2	Holder, Micro Relay	
1	1001186431	2	Relay, Micro 35 Amp	
1	1001116720	11	Terminal	
2	4460226	4	Socket, Female	
3	4460884	1	Plug, Male - 4 Position	
3	4460465	4	Socket, Female	

FIGURE 8-46. TURNTABLE HARNESS

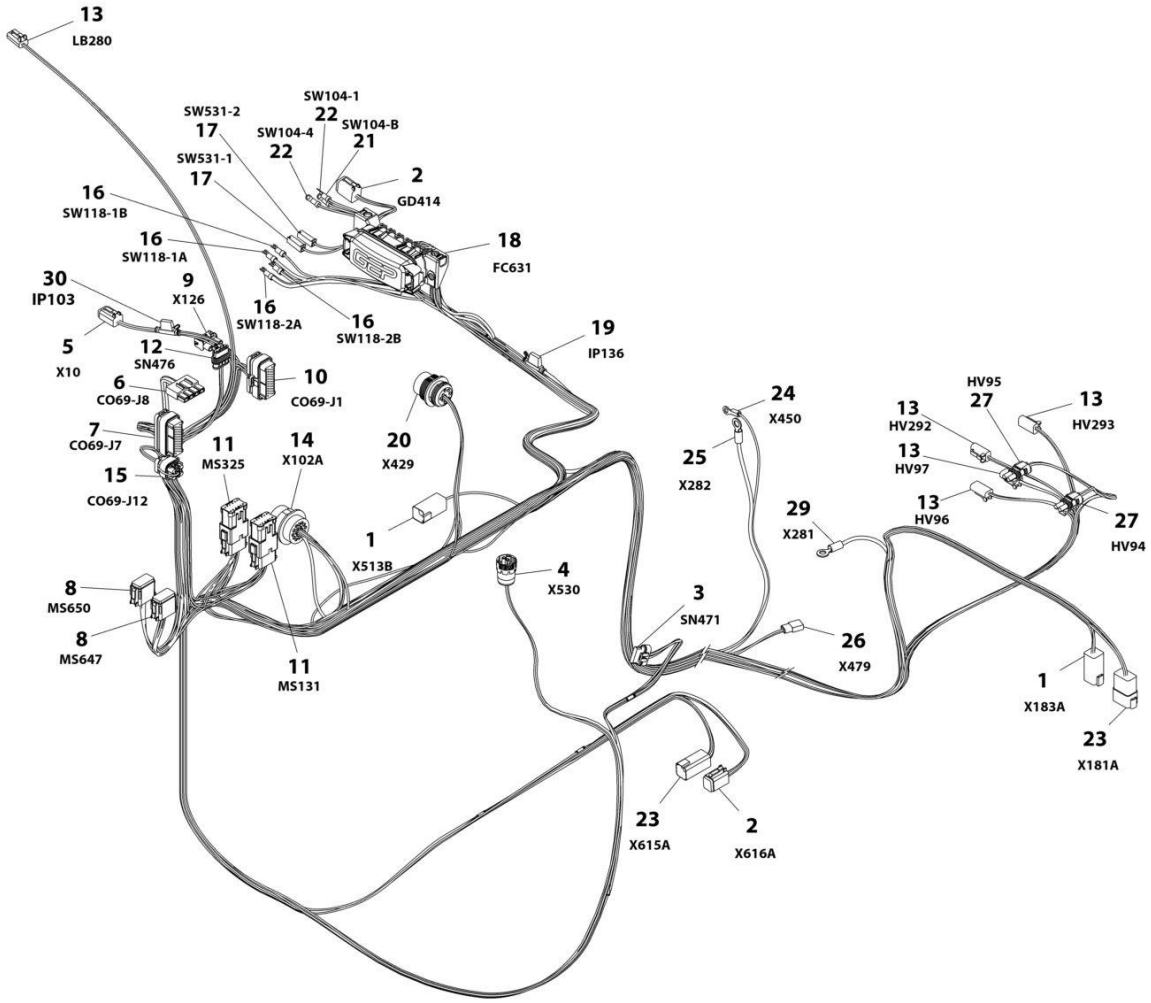

FIGURE 8-46. TURNTABLE HARNESS

ITEM	PART NUMBER	QTY	DESCRIPTION	REV
	1001164818	Ref	TURNTABLE HARNESS	N
1	4460899	2	Receptacle, Female - 6 Position	
1	4460464	7	Pin, Male	
1	4460466	5	Plug, Terminal	
2	4460894	2	Plug, Male - 6 Position	
2	4460465	10	Socket, Female	
2	4460466	2	Plug, Terminal	
3	1001117064	1	Plug, Male - 6 Position **(SN 0300203771 through 0300237491, SN E300000100 through E300005001)**	
3	1001230931	1	Plug, Male - 6 Position **(SN 0300237492 through 0300272360, SN E300005002 through E300007988, SN 1300007289 through 1300007393, Except SN 0300272174 through 0300272184, Excluding E300007847)**	
3	91554014	6	Terminal, Female **(SN 0300203771 through 0300237491, SN E300000100 through E300005001)**	
3	1001116748	6	Terminal, Female **(SN 0300237492 through 0300272360, SN E300005002 through E300007988, SN 1300007289 through 1300007393, Except SN 0300272174 through 0300272184, Excluding E300007847)**	
3	4460608	6	Seal, Terminal **(SN 0300203771 through 0300228068)**	
4	4460967	1	Connector -3 Position	
4	4460465	3	Socket, Female	
5	4460884	1	Plug, Male - 4 Position	
5	4460465	4	Socket, Female	
5	1001192401	1	Cap, Dust	
6	4460878	1	Plug, Male - 4 Position	
6	1001196590	2	Terminal	
6	4460887	3	Terminal	
7	4460873	1	Connector - 35 Position	
7	4460871	24	Socket, Female	
7	4460905	11	Plug, Terminal	
8	4460836	2	Plug, Male - 12 Position	
8	4460465	13	Socket, Female	
8	4460466	11	Plug, Terminal	
8	4460837	2	Bussbar- 12 Position	
9	1001119032	1	Receptacle, Female - 4 Position	
9	1001118378	4	Pin, Male	
10	4460874	1	Connector - 35 Position	
10	4460871	20	Socket, Female	
10	4460905	15	Plug, Terminal	
11	4460933	2	Plug, Male - 12 Position	
11	4460465	14	Socket, Female	
11	4460466	10	Plug, Terminal	
11	1001119020	2	Bussbar - 12 Position	
12	1001103012	1	Plug, Male - 4 Position	
12	1001107854	2	Socket, Female	
12	1001196589	2	Terminal	
12	1001116763	2	Seal, Red	
12	1001104498	2	Seal, Yellow	
13	4460891	5	Plug, Male - 2 Position	
13	4460465	10	Socket, Female	

ITEM	PART NUMBER	QTY	DESCRIPTION	REV
14	4460866	1	Connector - 19 Position	
14	4460464	6	Pin, Male	
14	4460508	2	Pin, Male	
14	4460466	11	Plug, Terminal	
15	1001113961	1	Plug, Male - 8 Position	
15	4460871	5	Socket, Female	
15	4460905	3	Plug, Terminal	
16	4460806	4	Terminal, Fork	
17	4460260	2	Housing, Terminal	
17	4460259	2	Terminal	
18	1001185964	1	Fuse Box Assembly	
18	1001116728	14	Terminal, Female	
18	8220125	AR	Terminal, Female	
18	1001116747	1	Terminal, Female	
18	4460748	AR	Plug, Terminal	
18	4460458	14	Seal, Terminal	
18	80963067	AR	Seal, Terminal	
18	1001116816	1	Connector - 2 Position with Diode	
18	8229244	2	Fuse 15Amp	
18	8229242	4	Fuse 5Amp	
18	1001129285	4	Diode	
18	1001095704	1	Relay 35Amp	
19	2400060	1	Fuseholder with Cover and 30Amp Fuse	
19	8229245	1	Fuse 30Amp	
20	1001112612	1	Connector - 9 Position	
20	4460464	5	Pin, Male	
20	4460466	4	Plug, Terminal	
21	4460042	1	Terminal, Ring	
22	4460068	1	Terminal, Ring	
23	4460931	2	Receptacle, Female - 8 Position	
23	4460464	9	Pin, Male	
23	4460466	5	Plug, Terminal	
24	4460043	1	Terminal, Ring	
25	8220045	1	Terminal, Ring	
26	4460424	1	Plug, Male - 2 Position	
26	4460226	2	Socket, Female	
27	4460742	2	Plug, Male - 2 Position	
27	4460457	4	Socket, Female	
28	4460247	1	Terminal, Ring (Not Shown)	
29	1001117107	1	Terminal, Ring	
30	2400060	1	Fuseholder with Cover and 5Amp Fuse **(SN 0300213186 through 0300272360, SN E300000100 through E300007988, SN 1300007289 through 1300007393, Except SN 0300272174 through 0300272184, Excluding E300007847)**	
30	8229242	1	Fuse 5Amp	

FIGURE 8-47. VALVE HARNESS - MAIN VALVE

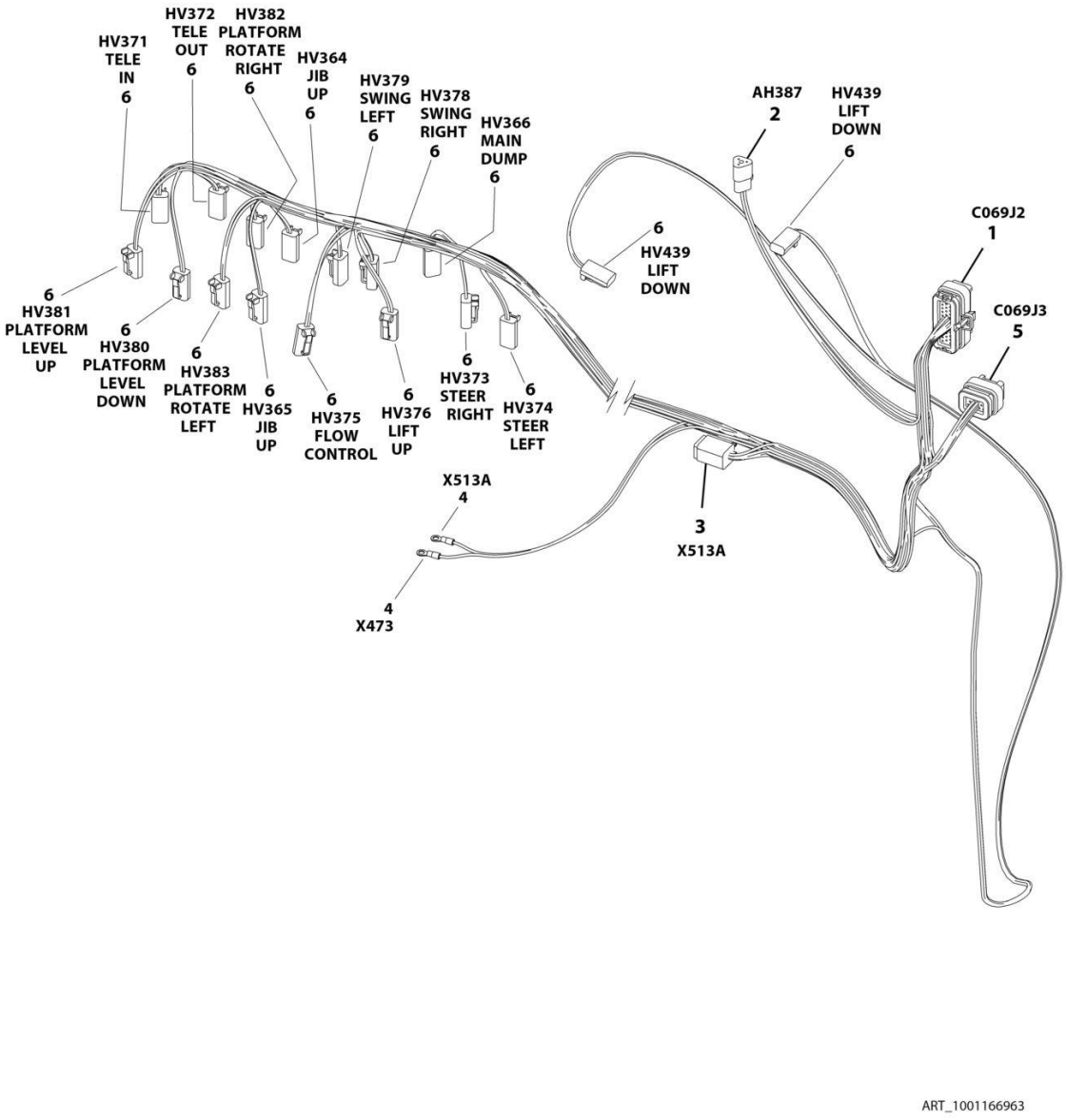

FIGURE 8-47. VALVE HARNESS - MAIN VALVE

ITEM	PART NUMBER	QTY	DESCRIPTION	REV
	1001166963	Ref	VALVE HARNESS - MAIN VALVE	G
1	4460875	1	Connector - 35 Position	
1	4460871	27	Socket, Female	
1	4460905	8	Plug, Terminal	
2	4460539	1	Plug, Male - 3 Position	
2	4460465	3	Socket, Female	
3	4460894	1	Plug, Male - 6 Position	
3	4460465	4	Socket, Female	
3	4460466	2	Plug, Terminal	
4	4460313	2	Terminal, Ring	
5	4460872	1	Connector - 14 Position	
5	4460871	8	Socket, Female	
5	4460905	6	Plug, Terminal	
6	4460891	17	Plug, Male - 2 Position	
6	4460465	34	Socket, Female	

FIGURE 8-48. SKYLINE HARNESS

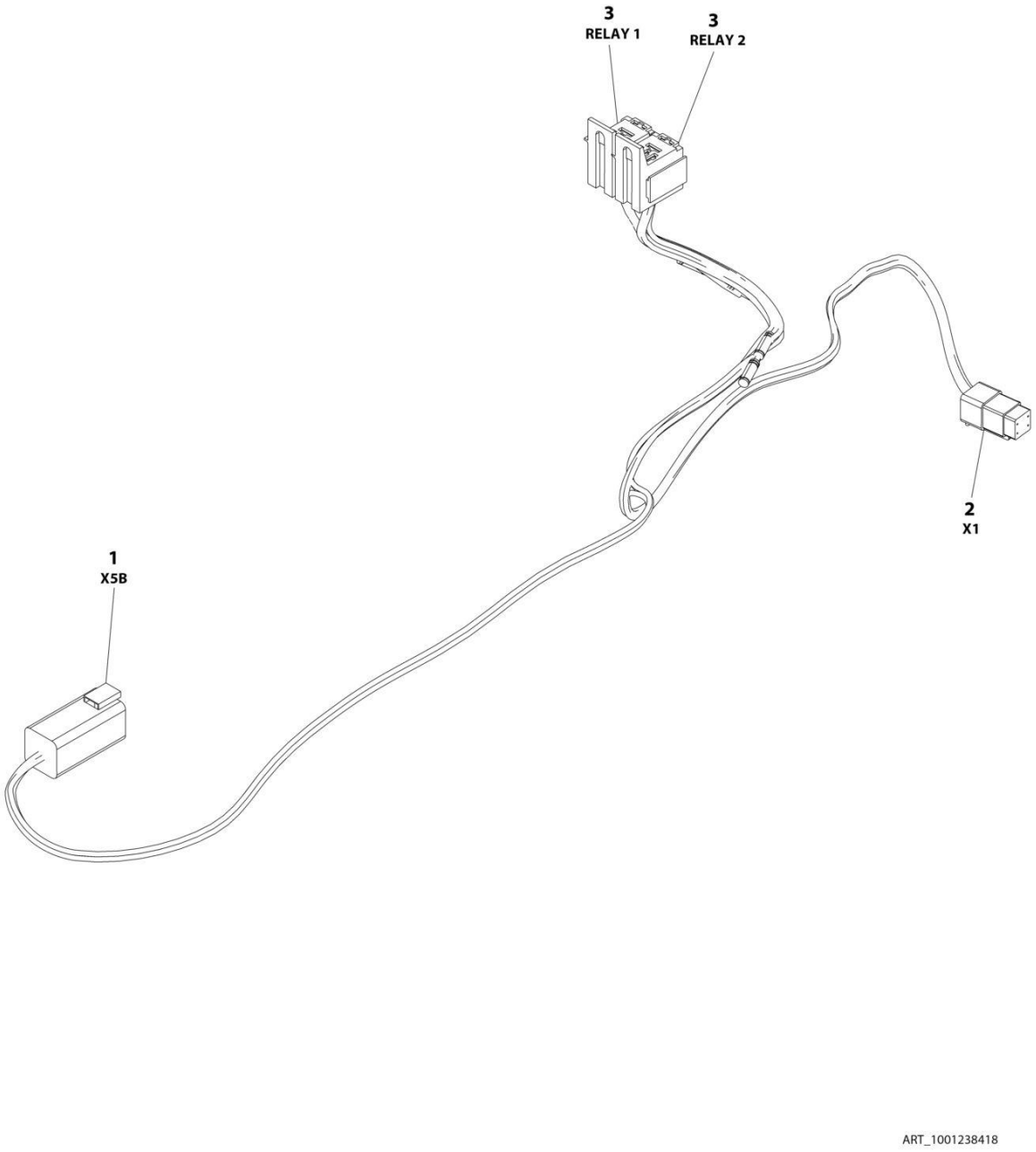

FIGURE 8-48. SKYLINE HARNESS

ITEM	PART NUMBER	QTY	DESCRIPTION	REV
	1001238418	Ref	SKYLINE HARNESS	B
1	4460899	1	Connector - 6 Position	
1	4460464	4	Pin, Male	
1	4460466	2	Plug, Terminal	
2	4461077	1	Connector - 4 Position	
2	1001126009	4	Socket, Female	
3	1001186432	2	Plug, Relay	
3	1001118388	5	Terminal	
3	1001118384	3	Terminal	
3	3740086	2	Relay	

FIGURE 8-49. SKYEYE INTERMEDIATE HARNESS

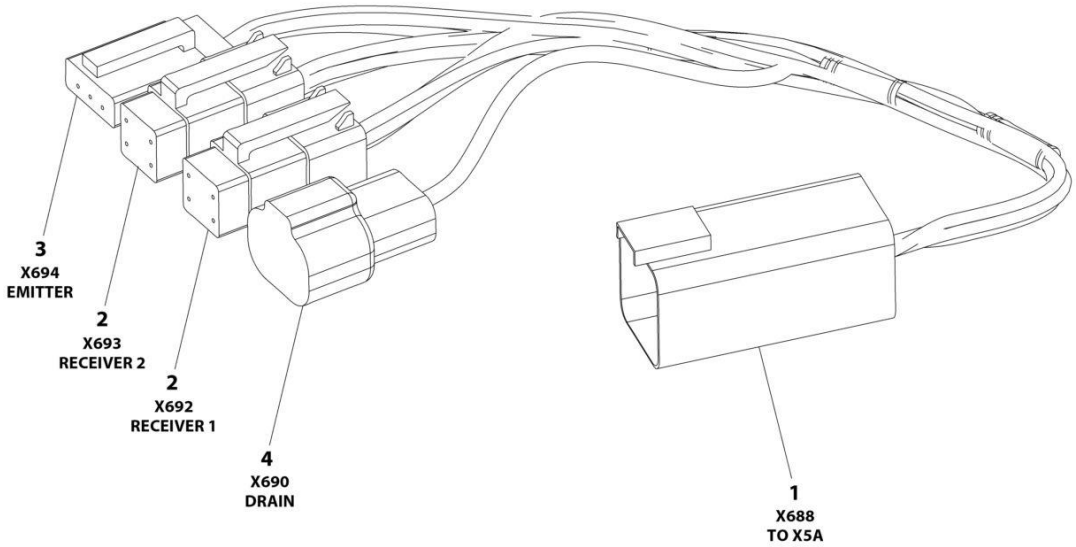

FIGURE 8-49. SKYEYE INTERMEDIATE HARNESS

ITEM	PART NUMBER	QTY	DESCRIPTION	REV
	1001237865	Ref	SKYEYE INTERMEDIATE HARNESS	A
1	4460899	1	Connector - 6 Position	
1	4460943	4	Pin, Male	
1	4460466	2	Plug, Terminal	
2	4461077	2	Connector - 4 Position	
2	1001119619	8	Socket, Female	
3	4460911	1	Connector - 3 Position	
3	1001119619	3	Socket, Female	
4	1001187681	1	Connector - 2 Position	
4	4460941	1	Pin, Male	
4	4460466	1	Plug, Terminal	

FIGURE 8-50. SKYEYE RECEIVER HARNESS

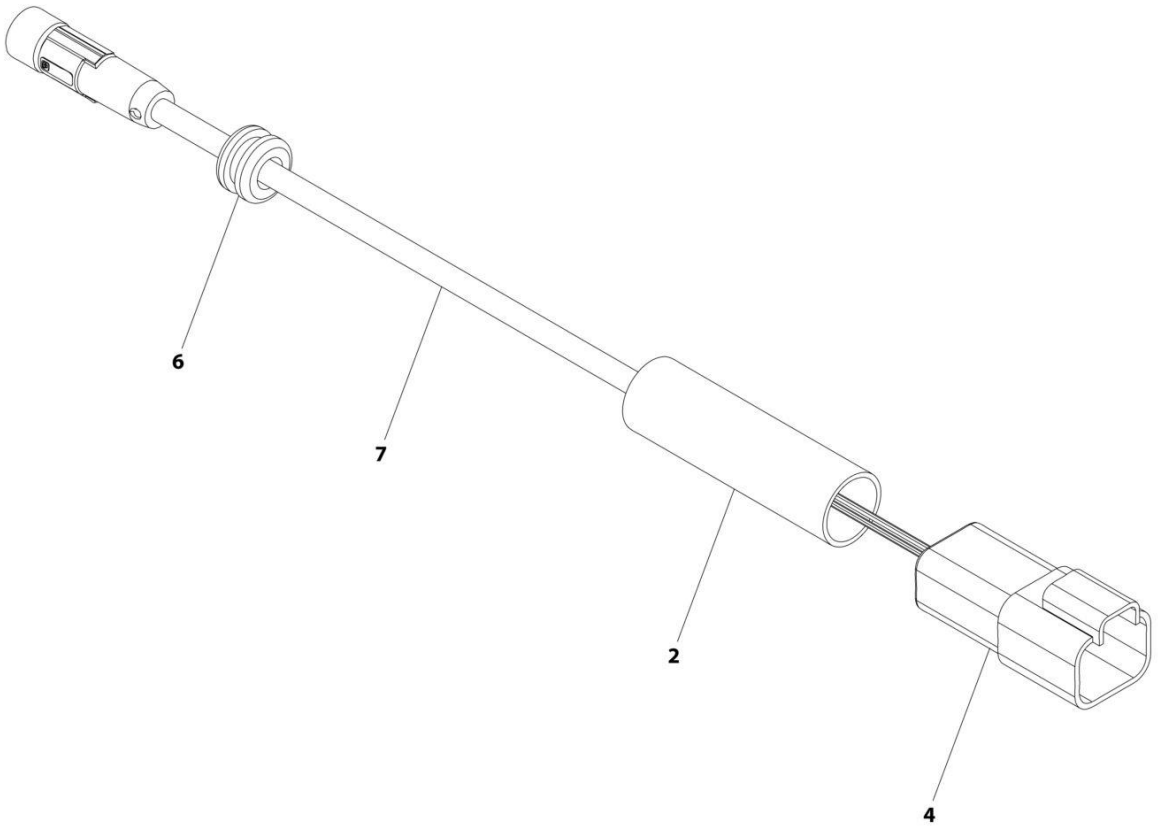

FIGURE 8-50. SKYEYE RECEIVER HARNESS

ITEM	PART NUMBER	QTY	DESCRIPTION	REV
	1001237863	Ref	SKYEYE RECEIVER HARNESS	A
2	2820247	AR	Tubing, Heat Shrink	
4	1001097051	1	Connector - 4 Position	
4	1001119620	4	Pin, Male	
6	1001227996	1	Grommet	
7	1001237862	1	Cable, M8 Female Cordset	

FIGURE 8-51. SKYEYE EMITTER HARNESS

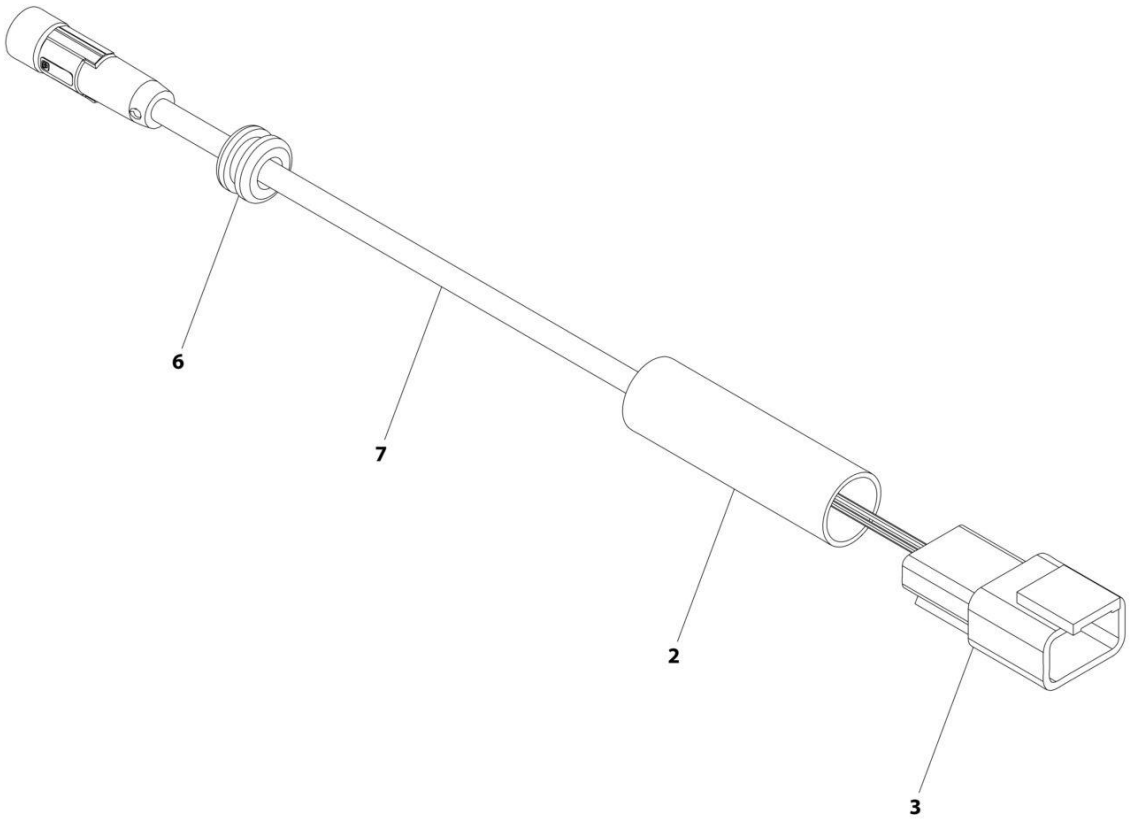

FIGURE 8-51. SKYEYE EMITTER HARNESS

ITEM	PART NUMBER	QTY	DESCRIPTION	REV
	1001237864	Ref	SKYEYE EMITTER HARNESS	A
2	2820247	AR	Tubing, Heat Shrink	
3	4460910	1	Connector - 3 Position	
3	1001119620	3	Pin, Male	
6	1001227996	1	Grommet	
7	1001237862	1	Cable, M8 Female Cordset	

SECTION 9 - DECALS

SECTION 9 - DECALS

FIGURE 9-1. DECAL INSTALLATION - ANSI, ANSI EXPORT AND CHINA SPECS - ENGLISH (400S WITH DEUTZ AND GM ENGINES)

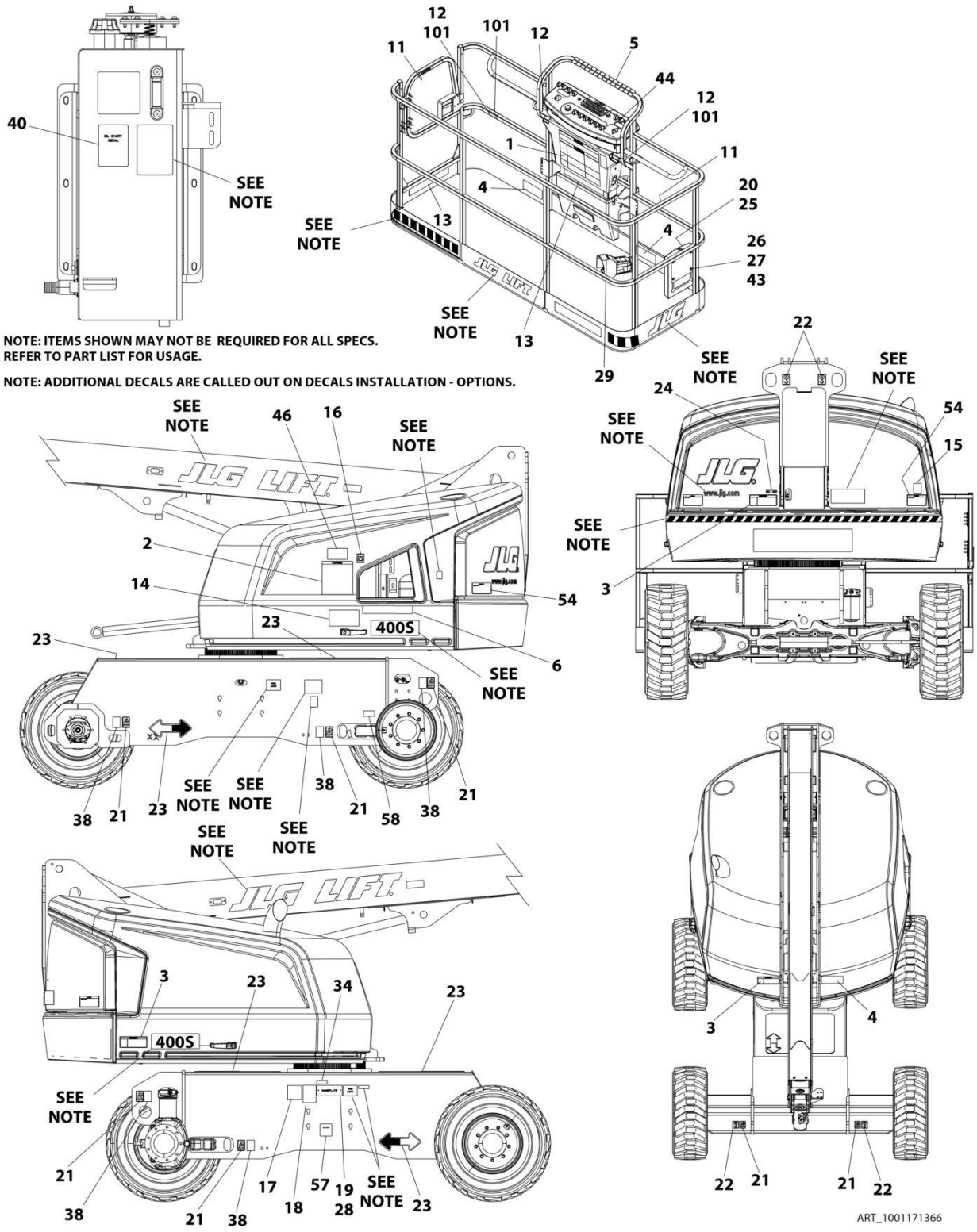

FIGURE 9-1. DECAL INSTALLATION - ANSI, ANSI EXPORT AND CHINA SPECS - ENGLISH (400S WITH DEUTZ AND GM ENGINES)

ITEM	PART NUMBER	QTY	DESCRIPTION	REV
	1001171545	Ref	DECAL INSTALLATION - REFERENCE CHART	M
	1001171366	Ref	DECAL INSTALLATION - ANSI, ANSI EXPORT AND CHINA SPECS - ENGLISH (400S)	G
1	1703797	1	Decal - Danger/Warning (Platform)	
2	1703798	1	Decal - Danger/Warning (Ground Control)	
3	1703805	3	Decal - Danger/Electrocution	
4	1703804	3	Decal - Warning Crushing	
5	1001173262	1	Decal - Legend (Platform)	
6	1001174313	1	Decal - Legend (Ground Control)	
11	1702868	2	Decal - No Hands	
12	1704277	3	Decal - Attach Lanyard Here **(SN 0300203771 through 0300239021, SN E300000100 through E300005116, SN 1300007289 through 1300007393)**	
13	1001171335	2	Decal - Capacity (Platform)	
14	1001171336	1	Decal - Capacity (Ground Control)	
16	1701504	1	Decal - Hydraulic Oil	
17	See Note	NSS	Decal - Bar Code (Note: Not Available for Purchase)	
18	1001131269	1	Decal - Patent	
19	See Note	NSS	Nameplate - Serial Number (Note: Not Available for Purchase)	
20	1701509	1	Decal - Manual	
21	1702300	8	Decal - Tie Down	
22	1701500	4	Decal - Lift	
23	1701529	4	Decal - Arrow	
24	3251243	1	Nameplate - 120V-60Hz	
25	0860520	1	Box, Manual Storage	
26	4751400	4	Washer, 1/4	
27	3311405	4	Nut, Lock 1/4	
28	3820001	2	Rivet	
29	3252347	1	Decal - Footswitch	
34	1705514	1	CSA Spec Decals (English/French)	
38	1701499	6	Decal - No Lift	
40	1704412	1	Decal - Hydraulic Oil Chart	
43	0641406	4	Bolt, 1/4 x 3/4	
44	1705351	1	Decal - Drive/Steer Instructions	
54	1703953	2	Decal - Warning Crushing	
57	1001223055	1	Decal - Yearly Inspection **(SN 0300233913 through 0300272360, SN E300004869 through E300007988, Except SN 0300272174 through 0300272184, Excluding E300007847)**	
58	1001223453	1	Decal - ICES **(SN 0300241476 through 0300272360, SN E300005377 through E300007988, Except SN 0300272174 through 0300272184, Excluding E300007847)**	
100	1001232026	1	Decal - Platform Lanyard Kit (Not Shown) **(SN 0300239022 through 0300272360, SN E300005117 through E300007988, Except SN 0300272174 through 0300272184, Excluding E300007847)**	
101	1704277	3	Decal - Attach Lanyard Here	

SECTION 9 - DECALS

FIGURE 9-2. DECAL INSTALLATION - ANSI SPECS - ENGLISH (400S WITH KUBOTA ENGINES)

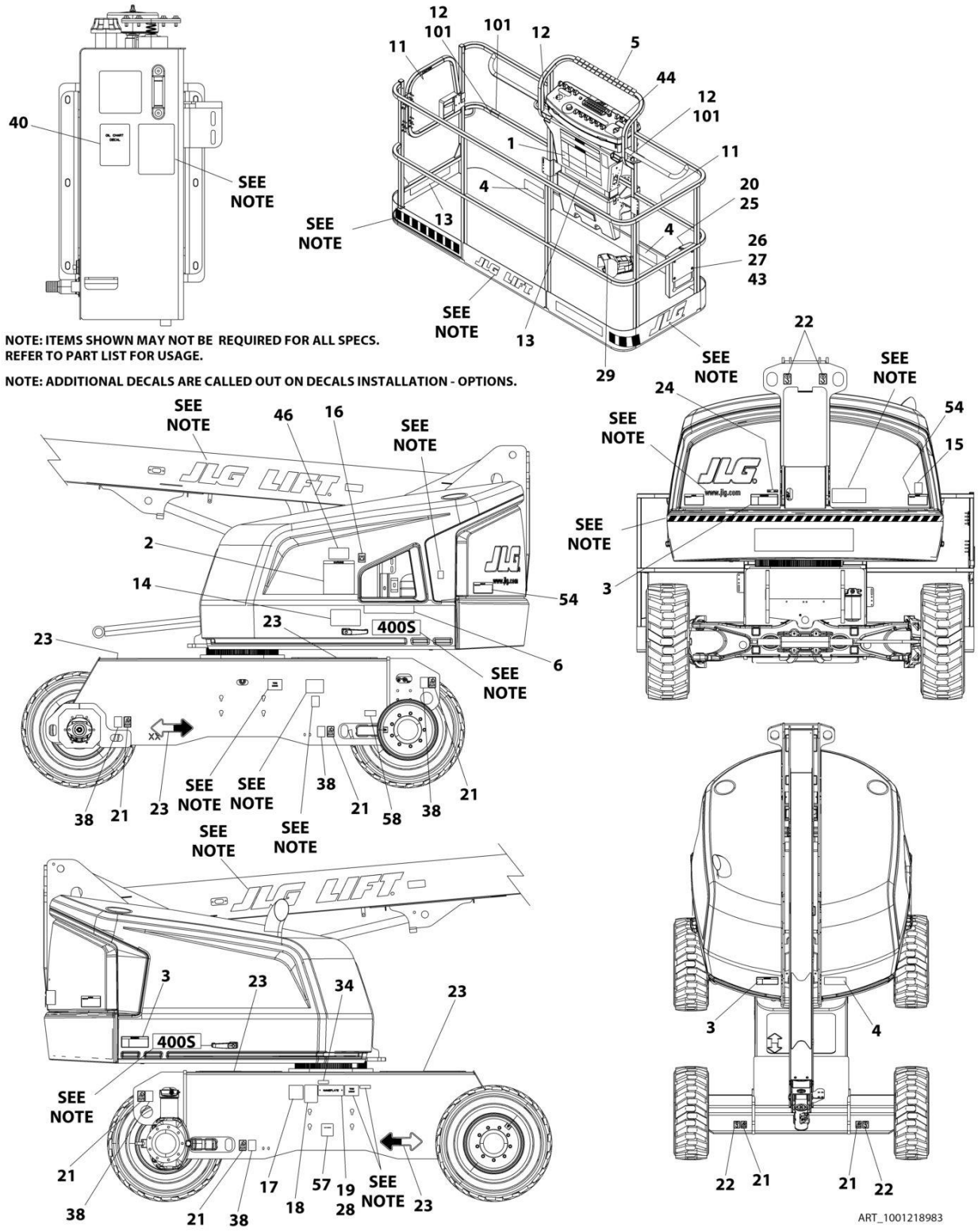

FIGURE 9-2. DECAL INSTALLATION - ANSI SPECS - ENGLISH (400S WITH KUBOTA ENGINES)

ITEM	PART NUMBER	QTY	DESCRIPTION	REV
	1001171545	Ref	DECAL INSTALLATION - REFERENCE CHART	M
	1001218983	Ref	DECAL INSTALLATION (ANSI SPECS) (ENGLISH) (400S)	D
1	1703797	1	Decal - Danger/Warning (Platform)	
2	1703798	1	Decal - Danger/Warning (Ground Control)	
3	1703805	3	Decal - Danger/Electrocution	
4	1703804	3	Decal - Warning Crushing	
5	1001173262	1	Decal - Legend (Platform)	
6	1001214608	1	Decal - Legend (Ground Control)	
11	1702868	2	Decal - No Hands	
12	1704277	3	Decal - Attach Lanyard Here **(SN 0300203771 through 0300239021, SN E300000100 through E300005116, SN 1300007289 through 1300007393)**	
13	1001171335	2	Decal - Capacity (Platform)	
14	1001171336	1	Decal - Capacity (Ground Control)	
16	1701504	1	Decal - Hydraulic Oil	
17	See Note	NSS	Decal - Bar Code (Note: Not Available for Purchase)	
18	1001131269	1	Decal - Patent	
19	See Note	NSS	Nameplate - Serial Number (Note: Not Available for Purchase)	
20	1701509	1	Decal - Manual	
21	1702300	8	Decal - Tie Down	
22	1701500	4	Decal - Lift	
23	1701529	4	Decal - Arrow	
24	3251243	1	Nameplate - 120V-60Hz	
25	0860520	1	Box, Manual Storage	
26	4751400	4	Washer, 1/4	
27	3311405	4	Nut, Lock 1/4	
28	3820001	2	Rivet	
29	3252347	1	Decal - Footswitch	
34	1705514	1	CSA Spec Decals (English/French)	
38	1701499	6	Decal - No Lift	
40	1704412	1	Decal - Hydraulic Oil Chart	
43	0641406	4	Bolt, 1/4 x 3/4	
44	1705351	1	Decal - Drive/Steer Instructions	
54	1703953	2	Decal - Warning Crushing	
57	1001223055	1	Decal - Yearly Inspection	
58	1001223453	1	Decal - ICES **(SN 0300241476 through 0300272360, SN E300005377 through E300007988, Except SN 0300272174 through 0300272184, Excluding E300007847)**	
100	1001232026	1	Decal - Platform Lanyard Kit (Not Shown) **(SN 0300239022 through 0300272360, SN E300005117 through E300007988, Except SN 0300272174 through 0300272184, Excluding E300007847)**	
101	1704277	3	Decal - Attach Lanyard Here	

SECTION 9 - DECALS

FIGURE 9-3. DECAL INSTALLATION - ANSI, ANSI EXPORT AND CHINA SPECS - ENGLISH (460SJ WITH DEUTZ AND GM ENGINES)

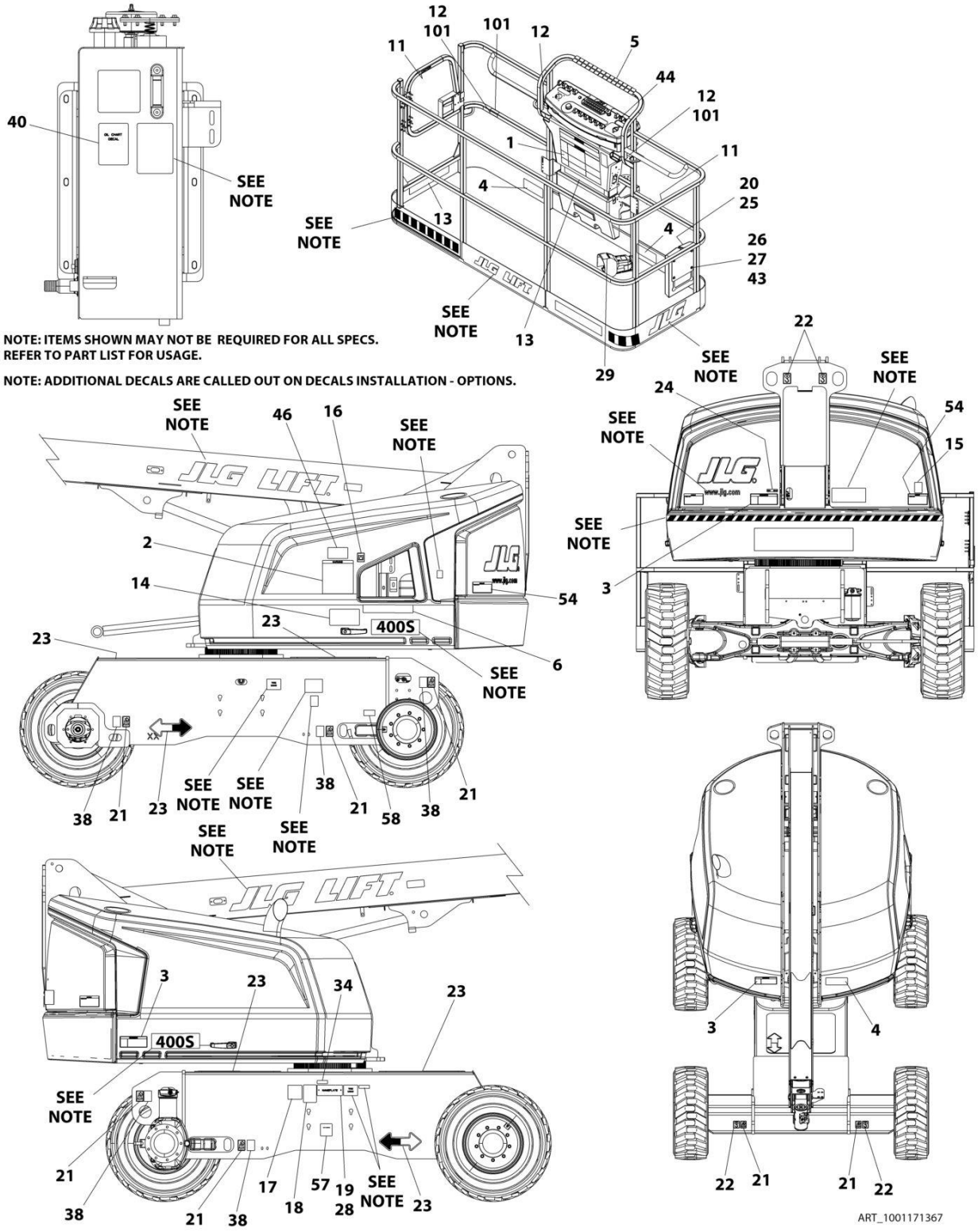

FIGURE 9-3. DECAL INSTALLATION - ANSI, ANSI EXPORT AND CHINA SPECS - ENGLISH (460SJ WITH DEUTZ AND GM ENGINES)

ITEM	PART NUMBER	QTY	DESCRIPTION	REV
	1001171545	Ref	DECAL INSTALLATION - REFERENCE CHART	M
	1001171367	Ref	DECAL INSTALLATION - ANSI, ANSI EXPORT AND CHINA SPECS - ENGLISH (460SJ)	G
1	1703797	1	Decal - Danger/Warning (Platform)	
2	1703798	1	Decal - Danger/Warning (Ground Control)	
3	1703805	3	Decal - Danger/Electrocution	
4	1703804	3	Decal - Warning Crushing	
5	1001173262	1	Decal - Legend (Platform)	
6	1001174313	1	Decal - Legend (Ground Control)	
11	1702868	2	Decal - No Hands	
12	1704277	3	Decal - Attach Lanyard Here **(SN 0300203771 through 0300239021, SN E300000100 through E300005116, SN 1300007289 through 1300007393)**	
13	1001171337	2	Decal - Capacity (Platform)	
14	1001171337	1	Decal - Capacity (Ground Control)	
16	1701504	1	Decal - Hydraulic Oil	
17	See Note	NSS	Decal - Bar Code (Note: Not Available for Purchase)	
18	1001131269	1	Decal - Patent	
19	See Note	NSS	Nameplate - Serial Number (Note: Not Available for Purchase)	
20	1701509	1	Decal - Manual	
21	1702300	8	Decal - Tie Down	
22	1701500	4	Decal - Lift	
23	1701529	4	Decal - Arrow	
24	3251243	1	Nameplate - 120V-60Hz	
25	0860520	1	Box, Manual Storage	
26	4751400	4	Washer 1/4	
27	3311405	4	Nut, Lock 1/4	
28	3820001	2	Rivet	
29	3252347	1	Decal - Footswitch	
34	1705514	1	CSA Spec Decals (English/French)	
38	1701499	6	Decal - No Lift	
40	1704412	1	Decal - Hydraulic Oil Chart	
43	0641406	4	Bolt 1/4 x 3/4	
44	1705351	1	Decal - Drive/Steer Instructions	
54	1703953	2	Decal - Warning Crushing	
57	1001223055	1	Decal - Yearly Inspection **(SN 0300233913 through 0300272360, SN E300004869 through E300007988, Except SN 0300272174 through 0300272184, Excluding E300007847)**	
58	1001223453	1	Decal - ICES **(SN 0300241476 through 0300272360, SN E300005377 through E300007988, Except SN 0300272174 through 0300272184, Excluding E300007847)**	
100	1001232026	1	Decal - Platform Lanyard Kit (Not Shown) **(SN 0300239022 through 0300272360, SN E300005117 through E300007988, Except SN 0300272174 through 0300272184, Excluding E300007847)**	
101	1704277	3	Decal - Attach Lanyard Here	

SECTION 9 - DECALS

FIGURE 9-4. DECAL INSTALLATION - ANSI SPECS - ENGLISH (460SJ WITH KUBOTA ENGINES)

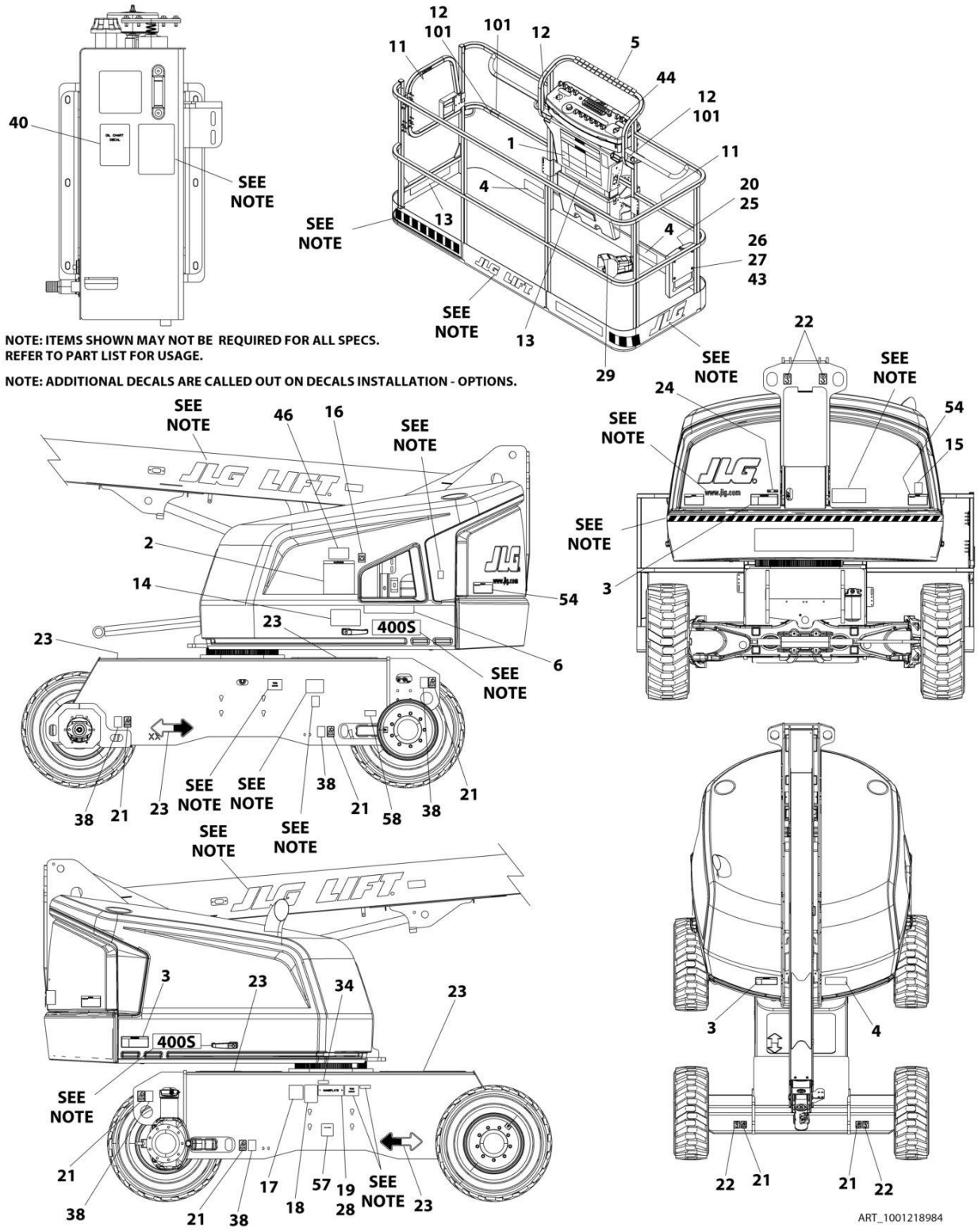

FIGURE 9-4. DECAL INSTALLATION - ANSI SPECS - ENGLISH (460SJ WITH KUBOTA ENGINES)

ITEM	PART NUMBER	QTY	DESCRIPTION	REV
	1001171545	Ref	DECAL INSTALLATION - REFERENCE CHART	M
	1001218984	Ref	DECAL INSTALLATION (ANSI SPECS) (ENGLISH) (460SJ)	D
1	1703797	1	Decal - Danger/Warning (Platform)	
2	1703798	1	Decal - Danger/Warning (Ground Control)	
3	1703805	3	Decal - Danger/Electrocution	
4	1703804	3	Decal - Warning Crushing	
5	1001173262	1	Decal - Legend (Platform)	
6	1001216408	1	Decal - Legend (Ground Control)	
11	1702868	2	Decal - No Hands	
12	1704277	3	Decal - Attach Lanyard Here **(SN 0300203771 through 0300239021, SN E300000100 through E300005116, SN 1300007289 through 1300007393)**	
13	1001171337	2	Decal - Capacity (Platform)	
14	1001171337	1	Decal - Capacity (Ground Control)	
16	1701504	1	Decal - Hydraulic Oil	
17	See Note	NSS	Decal - Bar Code (Note: Not Available for Purchase)	
18	1001131269	1	Decal - Patent	
19	See Note	NSS	Nameplate - Serial Number (Note: Not Available for Purchase)	
20	1701509	1	Decal - Manual	
21	1702300	8	Decal - Tie Down	
22	1701500	4	Decal - Lift	
23	1701529	4	Decal - Arrow	
24	3251243	1	Nameplate - 120V-60Hz	
25	0860520	1	Box, Manual Storage	
26	4751400	4	Washer, 1/4	
27	3311405	4	Nut, Lock 1/4	
28	3820001	2	Rivet	
29	3252347	1	Decal - Footswitch	
34	1705514	1	CSA Spec Decals (English/French)	
38	1701499	6	Decal - No Lift	
40	1704412	1	Decal - Hydraulic Oil Chart	
43	0641406	4	Bolt, 1/4 x 3/4	
44	1705351	1	Decal - Drive/Steer Instructions	
54	1703953	2	Decal - Warning Crushing	
57	1001223055	1	Decal - Yearly Inspection	
58	1001223453	1	Decal - ICES **(SN 0300241476 through 0300272360, SN E300005377 through E300007988, Except SN 0300272174 through 0300272184, Excluding E300007847)**	
100	1001232026	1	Decal - Platform Lanyard Kit (Not Shown) **(SN 0300239022 through 0300272360, SN E300005117 through E300007988, Except SN 0300272174 through 0300272184, Excluding E300007847)**	
101	1704277	3	Decal - Attach Lanyard Here	

SECTION 9 - DECALS

FIGURE 9-5. DECAL INSTALLATION - AUSTRALIAN SPEC (460SJ)

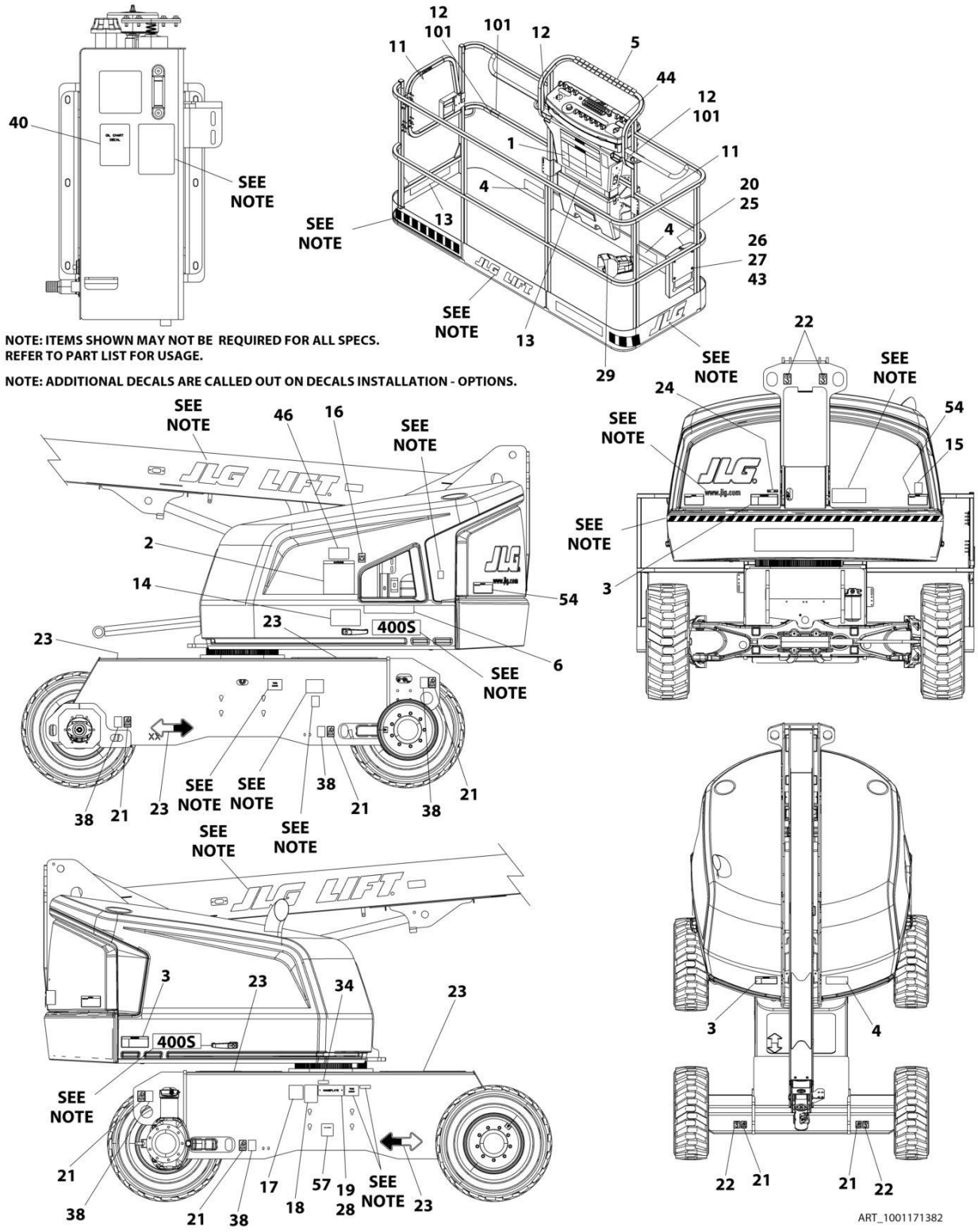

FIGURE 9-5. DECAL INSTALLATION - AUSTRALIAN SPEC (460SJ)

ITEM	PART NUMBER	QTY	DESCRIPTION	REV
	1001171545	Ref	DECAL INSTALLATION - REFERENCE CHART	M
	1001171382	Ref	DECAL INSTALLATION - AUSTRALIAN SPEC (460SJ)	G
1	1705921	1	Decal - Tipping/Electrocution (Platform)	
2	1705822	1	Decal - Electrocution/Safety Manual	
3	1705961	3	Decal - Electrocution	
4	1701518	3	Decal - Warning Crushing	
12	1704277	3	Decal - Attach Lanyard Here **(SN 0300203771 through 0300239021, SN E300000100 through E300005116, SN 1300007289 through 1300007393)**	
13	1001171339	2	Decal - Capacity (Platform)	
14	1001171339	1	Decal - Capacity (Ground Control)	
15	1705084	1	Decal - Sound Power Level **(SN 0300203771 through 0300231350)**	
15	1001204510	1	Decal - Sound Power Level **(SN 0300231351 through 0300272360, Except SN 0300272174 through 0300272184)**	
16	1701504	1	Decal - Hydraulic Oil	
17	See Note	NSS	Decal - Bar Code (Note: Not Available for Purchase)	
20	1701509	1	Decal - Manual	
21	1702300	8	Decal - Tie Down	
22	1701500	4	Decal - Lift	
23	1701529	4	Decal - Arrow	
25	0860520	1	Box, Manual Storage	
26	4751400	4	Washer, 1/4	
27	3311405	4	Nut, Lock 1/4	
28	3820001	2	Rivet	
29	1705828	1	Decal - Footswitch	
38	1701499	6	Decal - No Lift	
40	1704412	1	Decal - Hydraulic Oil Chart	
43	0641406	4	Bolt, 1/4 x 3/4	
46	1001112551	1	Decal - Emergency Controls	
54	1701518	2	Decal - Warning Crushing	
100	1001232026	1	Decal - Platform Lanyard Kit (Not Shown) **(SN 0300239022 through 0300272360, SN E300005117 through E300007988, Except SN 0300272174 through 0300272184, Excluding E300007847)**	
101	1704277	3	Decal - Attach Lanyard Here	

SECTION 9 - DECALS

FIGURE 9-6. DECAL INSTALLATION - CE SPEC (400S)

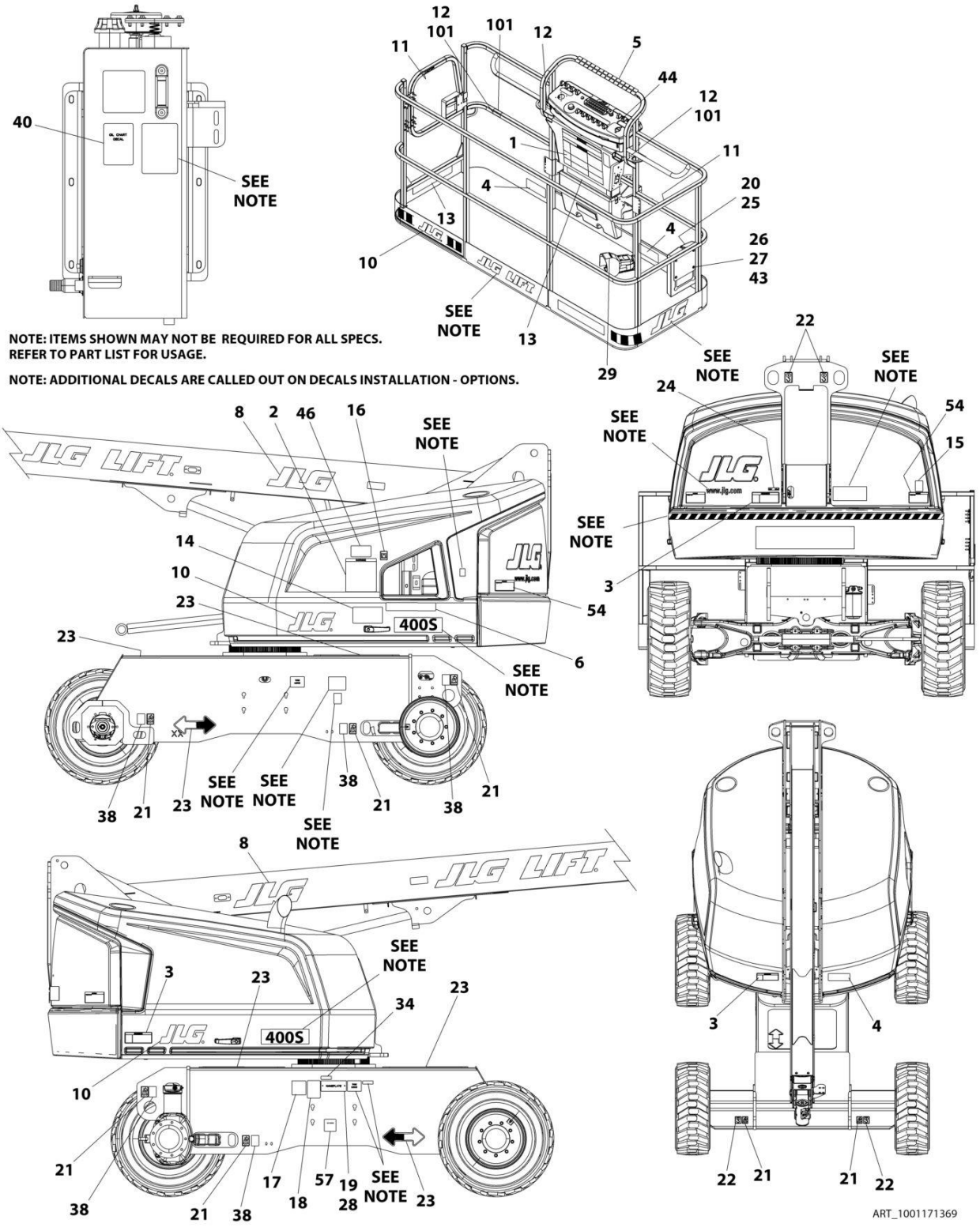

FIGURE 9-6. DECAL INSTALLATION - CE SPEC (400S)

ITEM	PART NUMBER	QTY	DESCRIPTION	REV
	1001171545	Ref	DECAL INSTALLATION - REFERENCE CHART **(SN 0300203771 through 0300220609)**	M
	1001217488	Ref	DECAL INSTALLATION - REFERENCE CHART (TURNTABLE) **(SN 0300220610 through 0300272360, Except SN 0300272174 through 0300272184)**	B
	1001171369	Ref	DECAL INSTALLATION - CE SPEC (400S)	J
1	1705921	1	Decal - Tipping/Electrocution (Platform)	
2	1705822	1	Decal - Electrocution/Safety Manual	
3	1705961	3	Decal - Electrocution	
4	1701518	3	Decal - Warning Crushing	
8	1001159323	1	Decal - JLG 8 in Black **(SN 0300220610 through 0300272360, Except SN 0300272174 through 0300272184)**	
10	1702773	1	Decal - JLG 5 in **(SN 0300220610 through 0300272360, Except SN 0300272174 through 0300272184)**	
12	1704277	3	Decal - Attach Lanyard Here **(SN 0300203771 through 0300239021, SN E300000100 through E300005116, SN 1300007289 through 1300007393)**	
13	1001185237	AR	Decal - Capacity (Platform)	
14	1001185237	1	Decal - Capacity (Ground Control)	
15	1705084	1	Decal - Sound Power Level	
15	1001204510	1	Decal - Sound Power Level	
16	1701504	1	Decal - Hydraulic Oil	
17	See Note	NSS	Decal - Bar Code (Note: Not Available for Purchase)	
20	1701509	1	Decal - Manual	
21	1702300	8	Decal - Tie Down	
22	1701500	4	Decal - Lift	
23	1701529	4	Decal - Arrow	
25	0860520	1	Box, Manual Storage	
26	4751400	4	Washer, 1/4	
27	3311405	4	Nut, Lock 1/4	
28	3820001	2	Rivet	
29	1705828	1	Decal - Footswitch	
38	1701499	6	Decal - No Lift	
40	1704412	1	Decal - Hydraulic Oil Chart	
43	0641406	4	Bolt, 1/4 x 3/4	
46	1001189882	2	Decal - MSSO	
54	1701518	2	Decal - Warning Crushing	
100	1001232026	1	Decal - Platform Lanyard Kit (Not Shown) **(SN 0300239022 through 0300272360, SN E300005117 through E300007988, Except SN 0300272174 through 0300272184, Excluding E300007847)**	
101	1704277	1	Decal - Attach Lanyard Here	

SECTION 9 - DECALS

FIGURE 9-7. DECAL INSTALLATION - CE SPEC (460SJ)

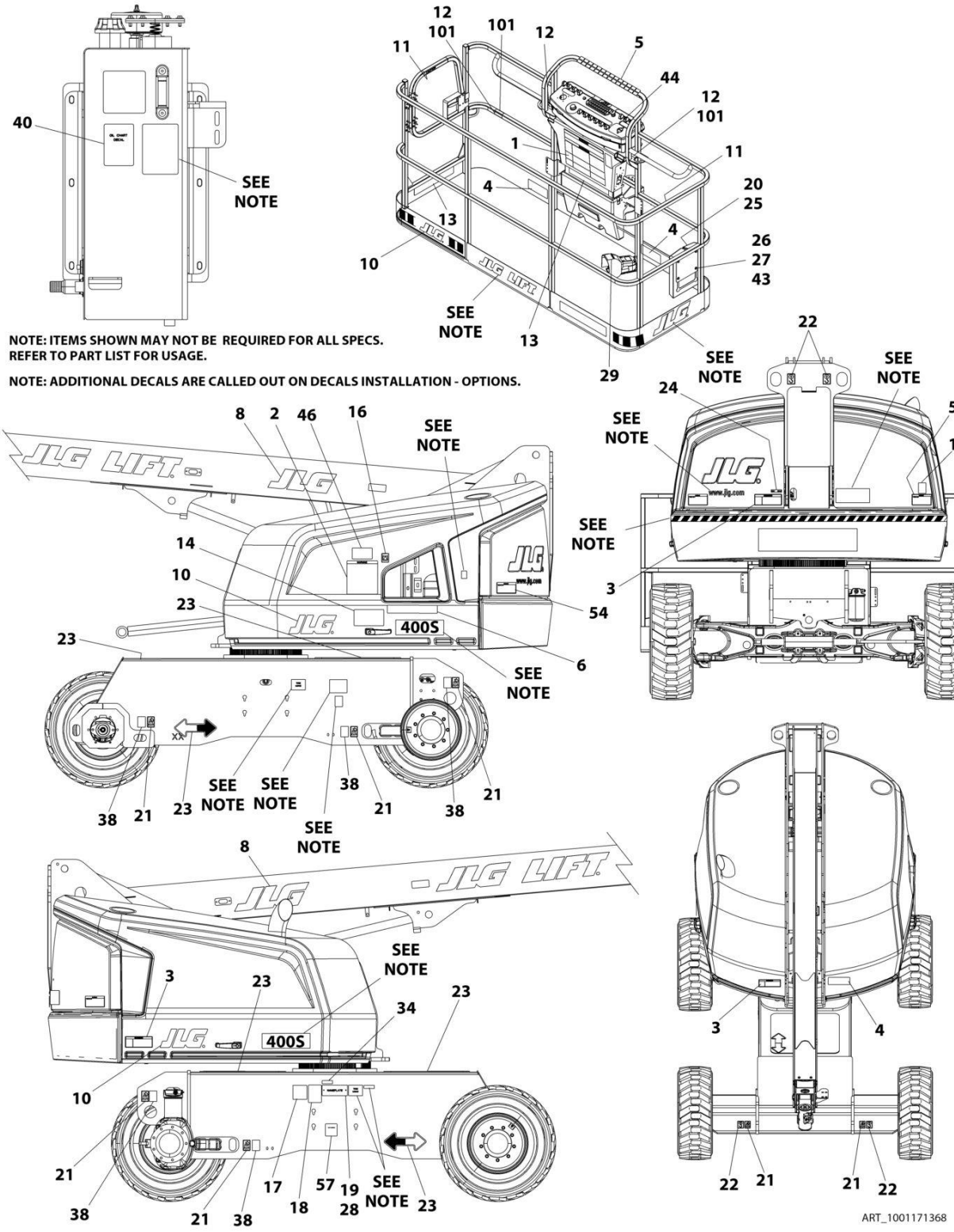

FIGURE 9-7. DECAL INSTALLATION - CE SPEC (460SJ)

ITEM	PART NUMBER	QTY	DESCRIPTION	REV
	1001171545	Ref	DECAL INSTALLATION - REFERENCE CHART **(SN 0300203771 through 0300220609)**	M
	1001217488	Ref	DECAL INSTALLATION - REFERENCE CHART (TURNTABLE) **(SN 0300220610 through 0300272360, Except SN 0300272174 through 0300272184)**	B
	1001171368	Ref	DECAL INSTALLATION - CE SPEC (460SJ)	J
1	1705921	1	Decal - Tipping/Electrocution (Platform)	
2	1705822	1	Decal - Electrocution/Safety Manual	
3	1705961	3	Decal - Electrocution	
4	1701518	3	Decal - Warning Crushing	
8	1001159323	1	Decal - JLG 8 in Black **(SN 0300220610 through 0300272360, Except SN 0300272174 through 0300272184)**	
10	1702773	1	Decal - JLG 5 **(SN 0300220610 through 0300272360, Except SN 0300272174 through 0300272184)**	
12	1704277	3	Decal - Attach Lanyard Here **(SN 0300203771 through 0300239021, SN E300000100 through E300005116, SN 1300007289 through 1300007393)**	
13	1001171339	AR	Decal - Capacity (Platform)	
14	1001171339	1	Decal - Capacity (Ground Control)	
15	1001204510	1	Decal - Sound Power Level	
16	1701504	1	Decal - Hydraulic Oil	
17	See Note	NSS	Decal - Bar Code (Note: Not Available for Purchase)	
20	1701509	1	Decal - Manual	
21	1702300	8	Decal - Tie Down	
22	1701500	4	Decal - Lift	
23	1701529	4	Decal - Arrow	
25	0860520	1	Box, Manual Storage	
26	4751400	4	Washer, 1/4	
27	3311405	4	Nut, Lock 1/4	
28	3820001	2	Rivet	
29	1705828	1	Decal - Footswitch	
38	1701499	6	Decal - No Lift	
40	1704412	1	Decal - Hydraulic Oil Chart	
43	0641406	4	Bolt, 1/4 x 3/4	
46	1001189882	AR	Decal - MSSO	
54	1701518	2	Decal - Warning Crushing	
100	1001232066	1	Decal - Platform Lanyard Kit (Not Shown) **(SN 0300239022 through 0300272360, SN E300005117 through E300007988, Except SN 0300272174 through 0300272184, Excluding E300007847)**	
101	1704277	3	Decal - Attach Lanyard Here	

SECTION 9 - DECALS

FIGURE 9-8. DECAL INSTALLATION - BRAZIL SPEC (DUAL LANGUAGE - PORTUGUESE/SPANISH) (400S)

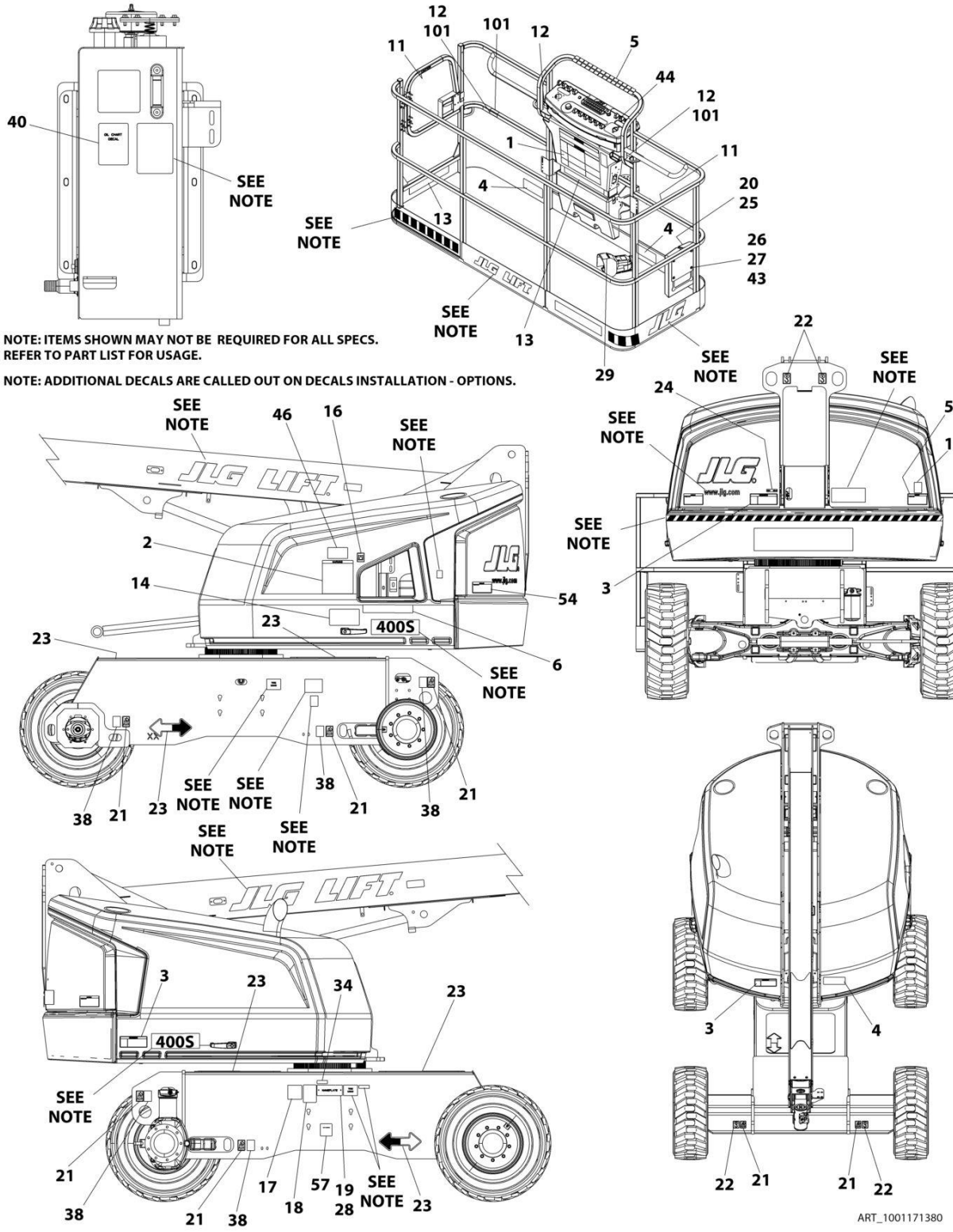

FIGURE 9-8. DECAL INSTALLATION - BRAZIL SPEC (DUAL LANGUAGE - PORTUGUESE/SPANISH) (400S)

ITEM	PART NUMBER	QTY	DESCRIPTION	REV
	1001171545	Ref	DECAL INSTALLATION - REFERENCE CHART	M
	1001171380	Ref	DECAL INSTALLATION - BRAZIL SPEC (DUAL LANGUAGE - PORTUGUESE/SPANISH) (400S)	F
1	1703928	1	Decal - Danger/Warning (Platform)	
2	1703934	1	Decal - Danger/Warning (Ground Control)	
3	1703940	3	Decal - Danger/Electrocution	
4	1703952	3	Decal - Warning Crushing	
5	1001173262	1	Decal - Legend (Platform)	
6	1001174313	1	Decal - Legend (Ground Control)	
11	1704002	2	Decal - No Hands	
12	1704277	3	Decal - Attach Lanyard Here **(SN 0300203771 through 0300239021, SN E300000100 through E300005116, SN 1300007289 through 1300007393)**	
13	1001171359	2	Decal - Capacity (Platform)	
14	1001171360	1	Decal - Capacity (Ground Control)	
16	1701504	1	Decal - Hydraulic Oil	
17	See Note	NSS	Decal - Bar Code (Note: Not Available for Purchase)	
19	See Note	NSS	Nameplate - Serial Number (Note: Not Available for Purchase)	
20	1701509	1	Decal - Manual	
21	1702300	8	Decal - Tie Down	
22	1701500	4	Decal - Lift	
23	1701529	4	Decal - Arrow	
24	3251243	1	Nameplate - 120V-60Hz	
25	0860520	1	Box, Manual Storage	
26	4751400	4	Washer 1/4	
27	3311405	4	Nut, Lock 1/4	
28	3820001	2	Rivet	
29	1703985	1	Decal - Footswitch	
38	1701499	6	Decal - No Lift	
40	1704412	1	Decal - Hydraulic Oil Chart	
43	0641406	4	Bolt, 1/4 x 3/4	
44	1705905	1	Decal - Drive/Steer Instruction	
54	1703953	2	Decal - Warning Crushing	
57	1001224052	1	Decal - Yearly Inspection (Not Shown)	
100	1001232026	1	Decal - Platform Lanyard Kit (Not Shown) **(SN 0300239022 through 0300272360, SN E300005117 through E300007988, Except SN 0300272174 through 0300272184, Excluding E300007847)**	
101	1704277	3	Decal - Attach Lanyard Here	

SECTION 9 - DECALS

FIGURE 9-9. DECAL INSTALLATION - BRAZIL SPEC (DUAL LANGUAGE - PORTUGUESE/SPANISH) (460SJ)

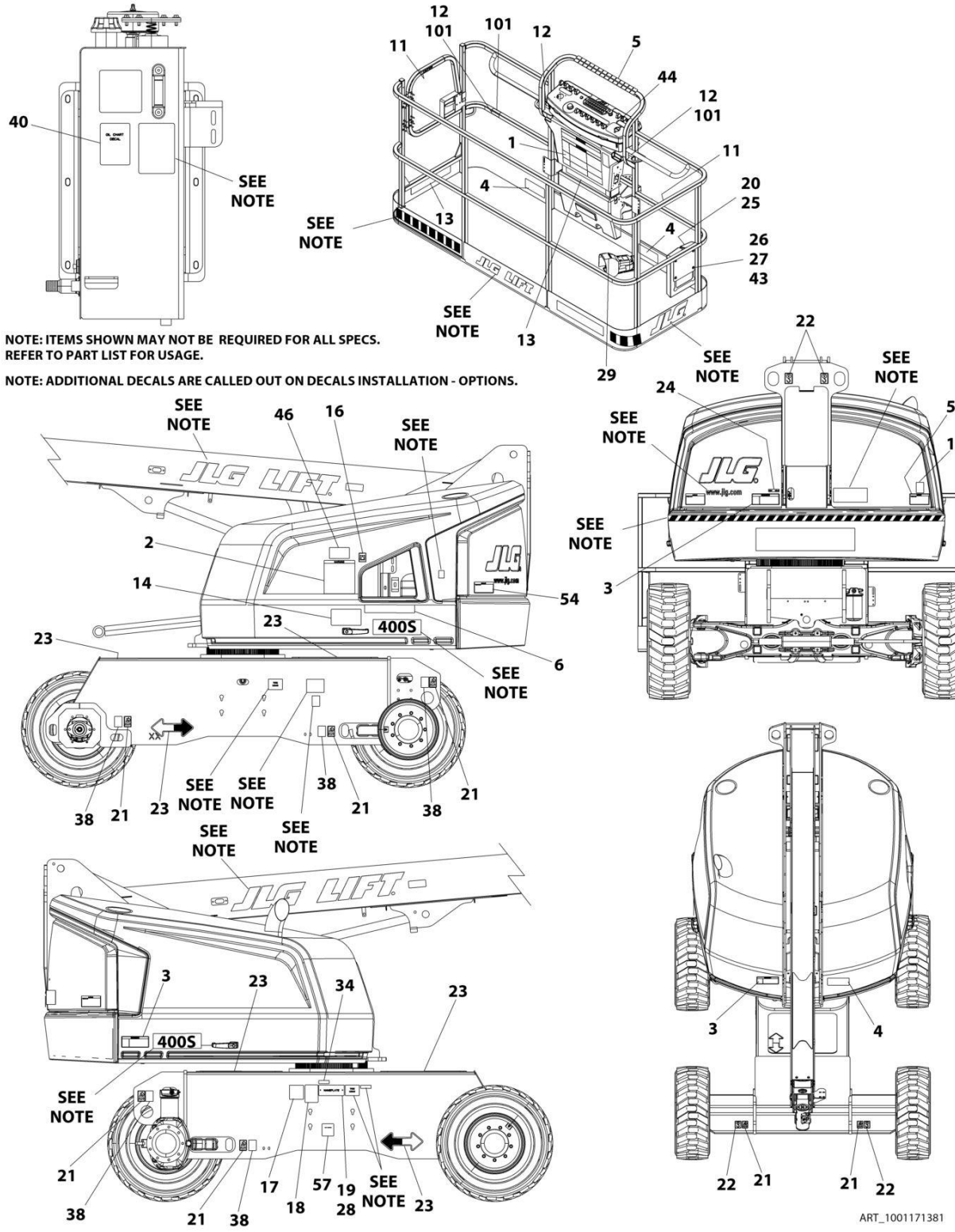

FIGURE 9-9. DECAL INSTALLATION - BRAZIL SPEC (DUAL LANGUAGE - PORTUGUESE/SPANISH) (460SJ)

ITEM	PART NUMBER	QTY	DESCRIPTION	REV
	1001171545	Ref	DECAL INSTALLATION - REFERENCE CHART	M
	1001171381	Ref	DECAL INSTALLATION - BRAZIL SPEC (DUAL LANGUAGE - PORTUGUESE/SPANISH) (460SJ)	F
1	1703928	1	Decal - Danger/Warning (Platform)	
2	1703934	1	Decal - Danger/Warning (Ground Control)	
3	1703940	3	Decal - Danger/Electrocution	
4	1703952	3	Decal - Warning Crushing	
5	1001173262	1	Decal - Legend (Platform)	
6	1001174313	1	Decal - Legend (Ground Control)	
11	1704002	2	Decal - No Hands	
12	1704277	3	Decal - Attach Lanyard Here **(SN 0300203771 through 0300239021, SN E300000100 through E300005116, SN 1300007289 through 1300007393)**	
13	1001171361	2	Decal - Capacity (Platform)	
14	1001171361	1	Decal - Capacity (Ground Control)	
16	1701504	1	Decal - Hydraulic Oil	
17	See Note	NSS	Decal - Bar Code (Note: Not Available for Purchase)	
19	See Note	NSS	Nameplate - Serial Number (Note: Not Available for Purchase)	
20	1701509	1	Decal - Manual	
21	1702300	8	Decal - Tie Down	
22	1701500	4	Decal - Lift	
23	1701529	4	Decal - Arrow	
24	3251243	1	Nameplate - 120V-60Hz	
25	0860520	1	Box, Manual Storage	
26	4751400	4	Washer, 1/4	
27	3311405	4	Nut, Lock 1/4	
28	3820001	2	Rivet	
29	1703985	1	Decal - Footswitch	
38	1701499	6	Decal - No Lift	
40	1704412	1	Decal - Hydraulic Oil Chart	
43	0641406	4	Bolt, 1/4 x 3/4	
44	1705905	1	Decal - Drive/Steer Instruction	
54	1703953	2	Decal - Warning Crushing	
57	1001224052	1	Decal - Yearly Inspection (Not Shown)	
100	1001232026	1	Decal - Platform Lanyard Kit (Not Shown) **(SN 0300239022 through 0300272360, SN E300005117 through E300007988, Except SN 0300272174 through 0300272184, Excluding E300007847)**	
101	1704277	3	Decal - Attach Lanyard Here	

SECTION 9 - DECALS

FIGURE 9-10. DECAL INSTALLATION - CHINESE SPEC (DUAL LANGUAGE - ENGLISH/CHINESE) (400S)

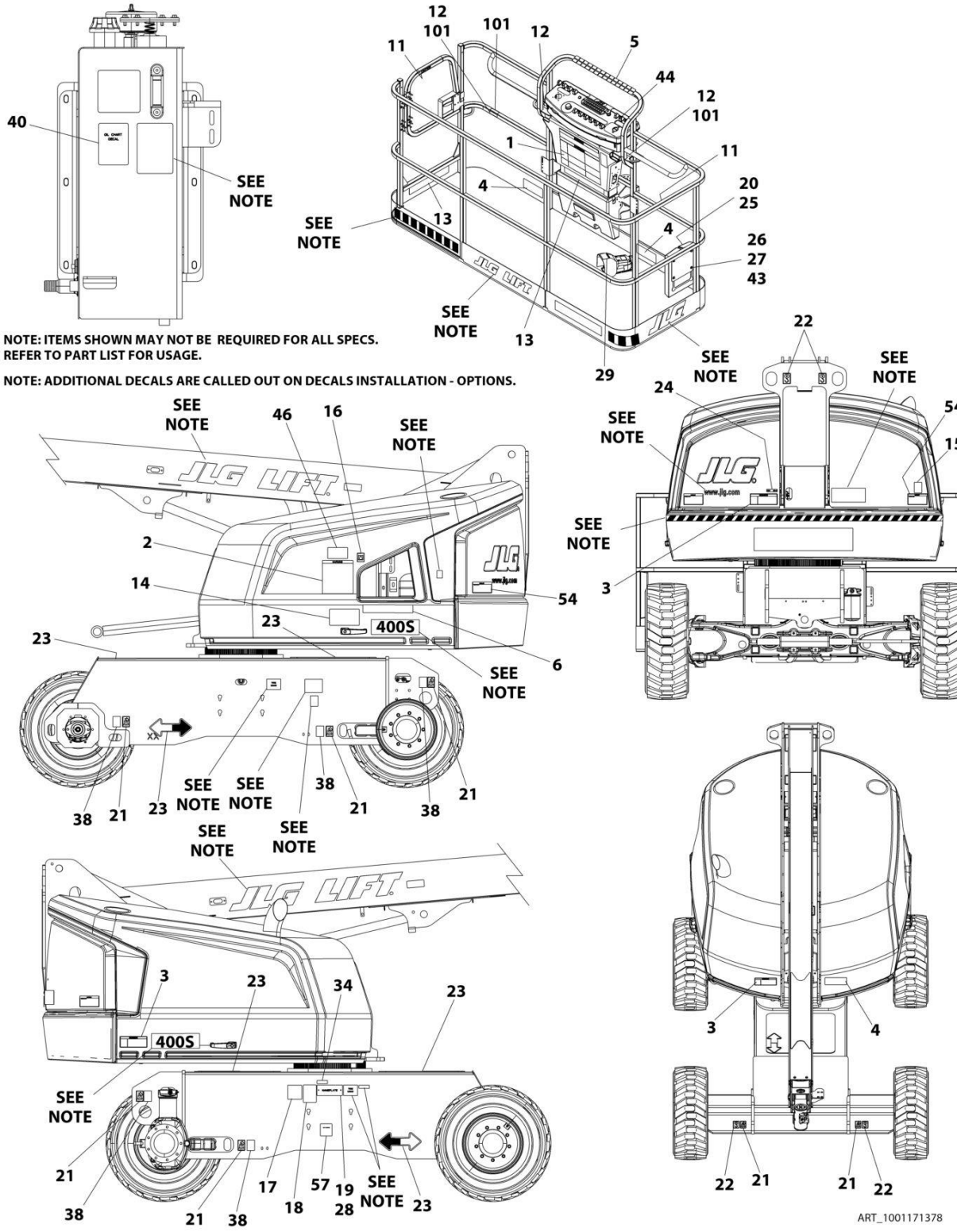

FIGURE 9-10. DECAL INSTALLATION - CHINESE SPEC (DUAL LANGUAGE - ENGLISH/CHINESE) (400S)

ITEM	PART NUMBER	QTY	DESCRIPTION	REV
	1001171545	Ref	DECAL INSTALLATION - REFERENCE CHART	M
	1001171378	Ref	DECAL INSTALLATION - CHINESE SPEC (DUAL LANGUAGE - ENGLISH/CHINESE) (400S)	F
1	1703925	1	Decal - Danger/Warning (Platform)	
2	1703931	1	Decal - Danger/Warning (Ground Control)	
3	1703937	3	Decal - Danger/Electrocution	
4	1703949	3	Decal - Warning Crushing	
5	1001173262	1	Decal - Legend (Platform)	
6	1001174313	1	Decal - Legend (Ground Control)	
12	1704277	3	Decal - Attach Lanyard Here **(SN 0300203771 through 0300239021, SN E300000100 through E300005116, SN 1300007289 through 1300007393)**	
13	1001171355	2	Decal - Capacity (Platform)	
14	1001171356	1	Decal - Capacity (Ground Control)	
16	1701504	1	Decal - Hydraulic Oil	
17	See Note	NSS	Decal - Bar Code (Note: Not Available for Purchase)	
19	See Note	NSS	Nameplate - Serial Number (Note: Not Available for Purchase)	
20	1701509	1	Decal - Manual	
21	1702300	8	Decal - Tie Down	
22	1701500	4	Decal - Lift	
23	1701529	4	Decal - Arrow	
25	0860520	1	Box, Manual Storage	
26	4751400	4	Washer, 1/4	
27	3311405	4	Nut, Lock 1/4	
28	3820001	2	Rivet	
29	1703982	1	Decal - Footswitch	
38	1701499	6	Decal - No Lift	
40	1704412	1	Decal - Hydraulic Oil Chart	
43	0641406	4	Bolt, 1/4 x 3/4	
44	1705430	1	Decal - Drive/Steer Instruction	
54	1703953	2	Decal - Warning Crushing	
57	1001224050	1	Decal - Yearly Inspection (Not Shown)	
100	1001232026	1	Decal - Platform Lanyard Kit (Not Shown) **(SN 0300239022 through 0300272360, SN E300005117 through E300007988, Except SN 0300272174 through 0300272184, Excluding E300007847)**	
101	1704277	3	Decal - Attach Lanyard Here	

SECTION 9 - DECALS

FIGURE 9-11. DECAL INSTALLATION - CHINESE SPEC (DUAL LANGUAGE - ENGLISH/CHINESE) (460SJ)

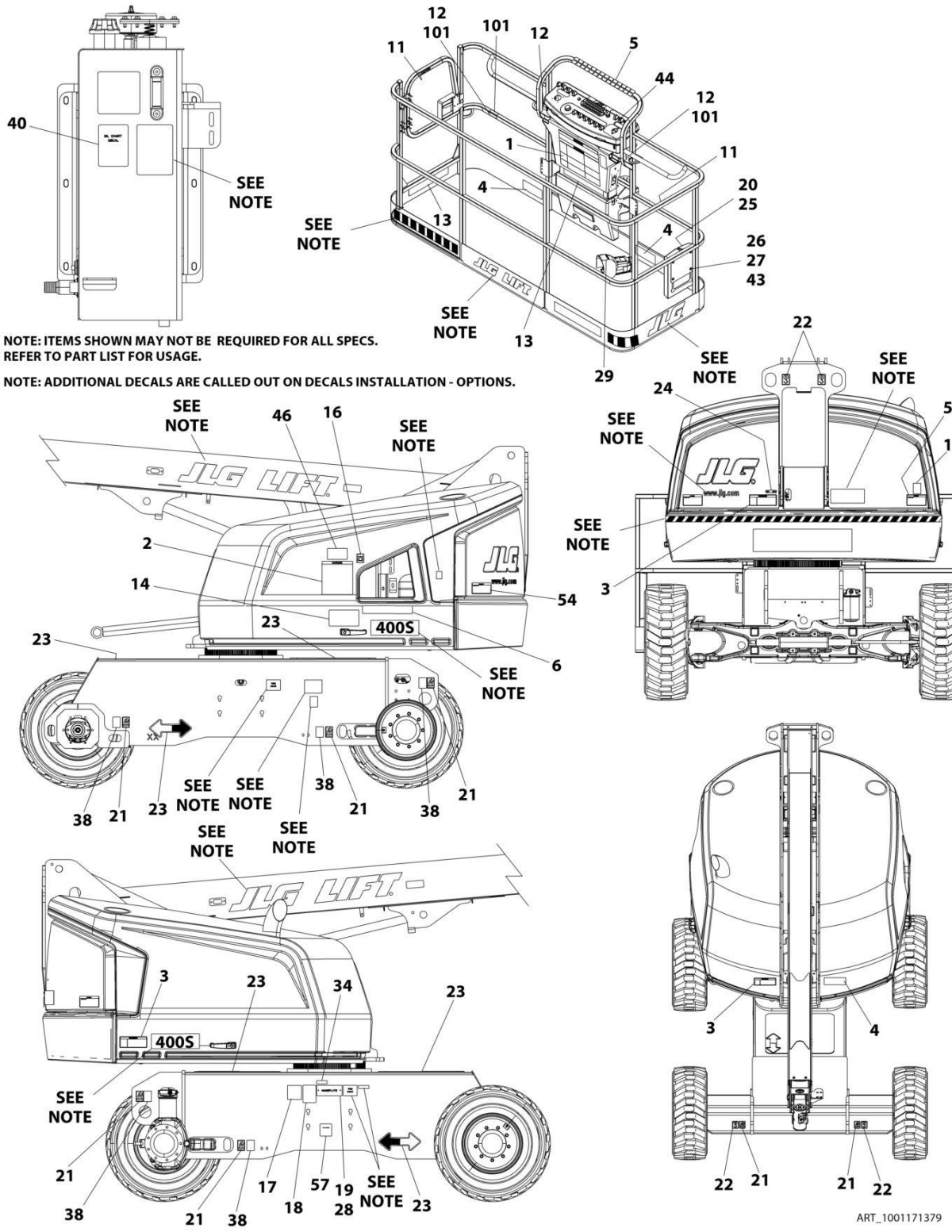

FIGURE 9-11. DECAL INSTALLATION - CHINESE SPEC (DUAL LANGUAGE - ENGLISH/CHINESE) (460SJ)

ITEM	PART NUMBER	QTY	DESCRIPTION	REV
	1001171545	Ref	DECAL INSTALLATION - REFERENCE CHART	M
	1001171379	Ref	DECAL INSTALLATION - CHINESE SPEC (DUAL LANGUAGE - ENGLISH/CHINESE) (460SJ)	F
1	1703925	1	Decal - Danger/Warning (Platform)	
2	1703931	1	Decal - Danger/Warning (Ground Control)	
3	1703937	3	Decal - Danger/Electrocution	
4	1703949	3	Decal - Warning Crushing	
5	1001173262	1	Decal - Legend (Platform)	
6	1001174313	1	Decal - Legend (Ground Control)	
12	1704277	3	Decal - Attach Lanyard Here **(SN 0300203771 through 0300239021, SN E300000100 through E300005116, SN 1300007289 through 1300007393)**	
13	1001171357	2	Decal - Capacity (Platform)	
14	1001171357	1	Decal - Capacity (Ground Control)	
16	1701504	1	Decal - Hydraulic Oil	
17	See Note	NSS	Decal - Bar Code (Note: Not Available for Purchase)	
19	See Note	NSS	Nameplate - Serial Number (Note: Not Available for Purchase)	
20	1701509	1	Decal - Manual	
21	1702300	8	Decal - Tie Down	
22	1701500	4	Decal - Lift	
23	1701529	4	Decal - Arrow	
25	0860520	1	Box, Manual Storage	
26	4751400	4	Washer, 1/4	
27	3311405	4	Nut, Lock 1/4	
28	3820001	2	Rivet	
29	1703982	1	Decal - Footswitch	
38	1701499	6	Decal - No Lift	
40	1704412	1	Decal - Hydraulic Oil Chart	
43	0641406	4	Bolt, 1/4 x 3/4	
44	1705430	1	Decal - Drive/Steer Instruction	
54	1703953	2	Decal - Warning Crushing	
57	1001224050	1	Decal - Yearly Inspection (Not Shown)	
100	1001232026	1	Decal - Platform Lanyard Kit (Not Shown) **(SN 0300239022 through 0300272360, SN E300005117 through E300007988, Except SN 0300272174 through 0300272184, Excluding E300007847)**	
101	1704277	3	Decal - Attach Lanyard Here	

SECTION 9 - DECALS

FIGURE 9-12. DECAL INSTALLATION - CSA SPEC (DUAL LANGUAGE - ENGLISH/FRENCH) (400S WITH DEUTZ AND GM ENGINES)

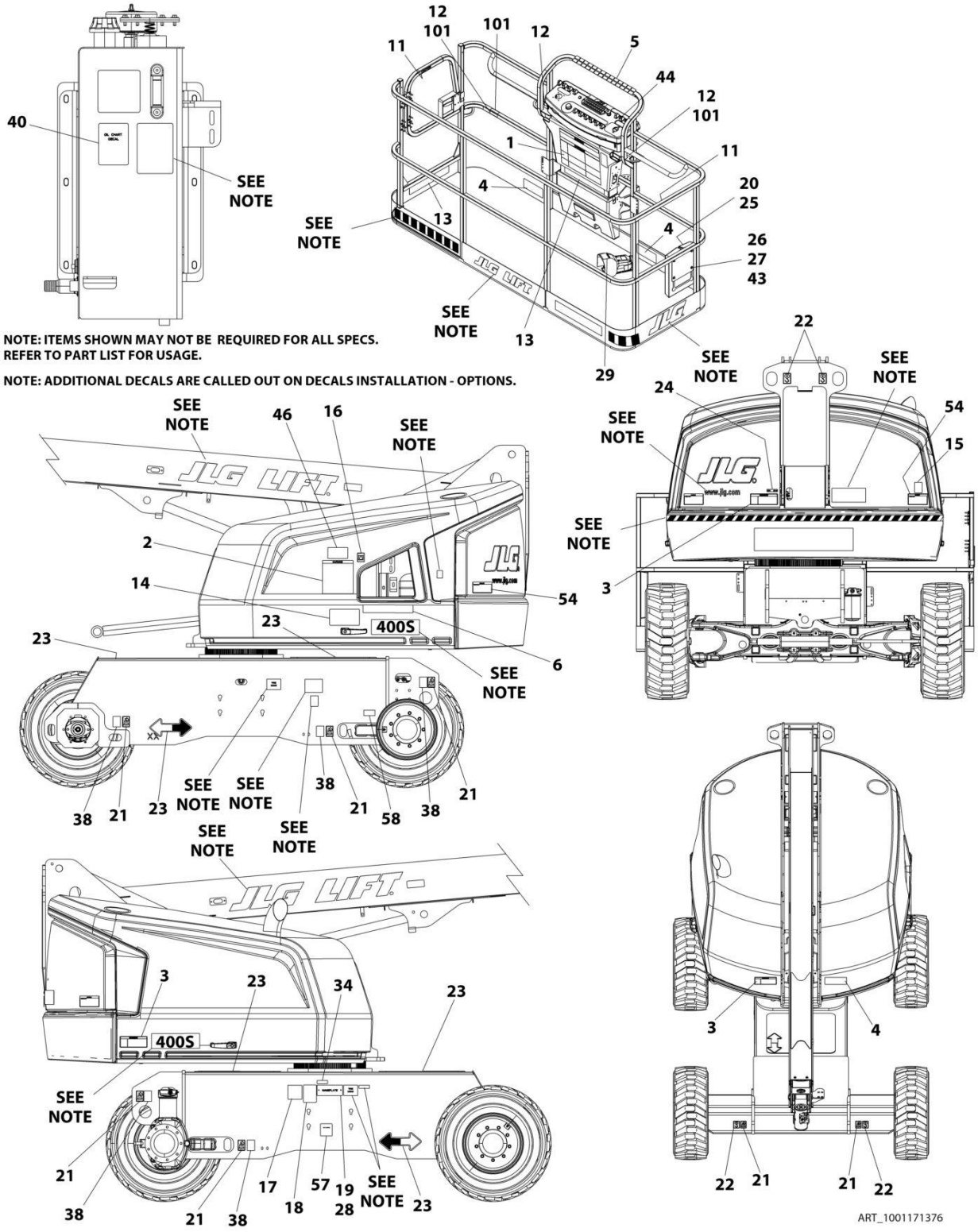

FIGURE 9-12. DECAL INSTALLATION - CSA SPEC (DUAL LANGUAGE - ENGLISH/FRENCH) (400S WITH DEUTZ AND GM ENGINES)

ITEM	PART NUMBER	QTY	DESCRIPTION	REV
	1001171545	Ref	DECAL INSTALLATION - REFERENCE CHART	M
	1001171376	Ref	DECAL INSTALLATION - CSA SPEC (DUAL LANGUAGE - ENGLISH/FRENCH) (400S)	G
1	1703924	1	Decal - Danger/Warning (Platform)	
2	1703930	1	Decal - Danger/Warning (Ground Control)	
3	1703936	3	Decal - Danger/Electrocution	
4	1703948	3	Decal - Warning Crushing	
5	1001173262	1	Decal - Legend (Platform)	
6	1001174313	1	Decal - Legend (Ground Control)	
11	1704000	2	Decal - No Hands	
12	1704277	3	Decal - Attach Lanyard Here **(SN 0300203771 through 0300239021, SN E300000100 through E300005116, SN 1300007289 through 1300007393)**	
13	1001171351	2	Decal - Capacity (Platform)	
14	1001171352	1	Decal - Capacity (Ground Control)	
16	1701504	1	Decal - Hydraulic Oil	
17	See Note	NSS	Decal - Bar Code (Note: Not Available for Purchase)	
18	1001131269	1	Decal - Patent	
19	See Note	NSS	Nameplate - Serial Number (Note: Not Available for Purchase)	
20	1701509	1	Decal - Manual	
21	1702300	8	Decal - Tie Down	
22	1701500	4	Decal - Lift	
23	1701529	4	Decal - Arrow	
24	3251243	1	Nameplate - 120V-60Hz	
25	0860520	1	Box, Manual Storage	
26	4751400	4	Washer, 1/4	
27	3311405	4	Nut, Lock 1/4	
28	3820001	2	Rivet	
29	1703984	1	Decal - Footswitch	
34	1705514	1	Decal - CSA	
38	1701499	6	Decal - No Lift	
40	1704412	1	Decal - Hydraulic Oil Chart	
43	0641406	4	Bolt, 1/4 x 3/4	
44	1705429	1	Decal - Drive/Steer Instruction	
54	1703953	2	Decal - Warning Crushing	
57	1001223971	1	Decal - Yearly Inspection (Not Shown)	
58	1001223453	1	Decal - ICES **(SN 0300241476 through 0300272360, SN E300005377 through E300007988, Except SN 0300272174 through 0300272184, Excluding E300007847)**	
100	1001232036	1	Decal - Platform Lanyard Kit (Not Shown) **(SN 0300239022 through 0300272360, SN E300005117 through E300007988, Except SN 0300272174 through 0300272184, Excluding E300007847)**	
101	1704277	3	Decal - Attach Lanyard Here	

SECTION 9 - DECALS

FIGURE 9-13. DECAL INSTALLATION - CSA SPECS (ENGLISH) (400S WITH KUBOTA ENGINES)

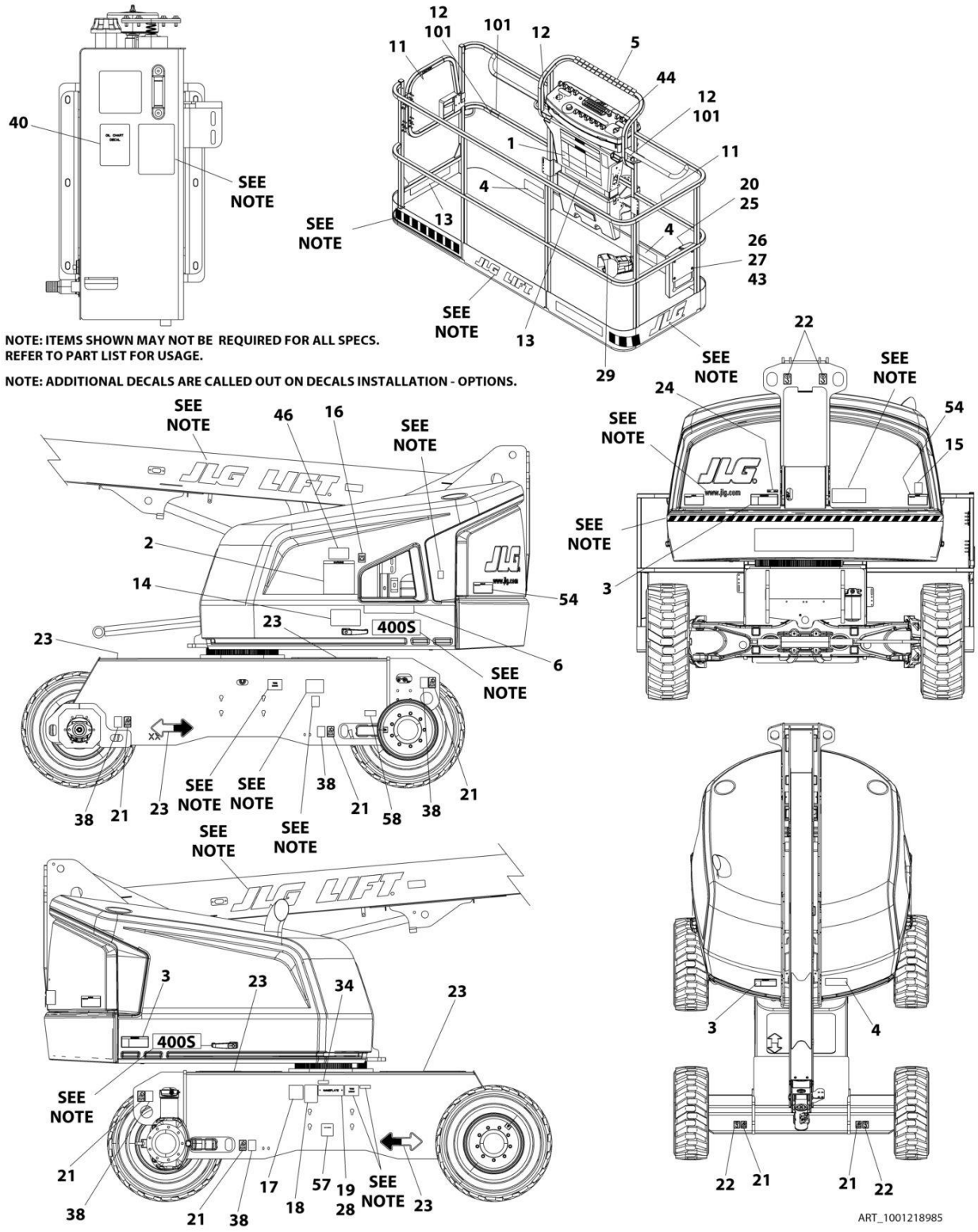

FIGURE 9-13. DECAL INSTALLATION - CSA SPECS (ENGLISH) (400S WITH KUBOTA ENGINES)

ITEM	PART NUMBER	QTY	DESCRIPTION	REV
	1001171545	Ref	DECAL INSTALLATION - REFERENCE CHART	M
	1001218985	Ref	DECAL INSTALLATION - WITH KUBOTA ENGINE (CSA SPECS) (ENGLISH) (400S)	D
1	1703797	1	Decal - Danger/Warning (Platform)	
2	1703798	1	Decal - Danger/Warning (Ground Control)	
3	1703805	3	Decal - Danger/Electrocution	
4	1703804	3	Decal - Warning Crushing	
5	1001173262	1	Decal - Legend (Platform)	
6	1001216408	1	Decal - Legend (Ground Control)	
11	1702868	2	Decal - No Hands	
12	1704277	3	Decal - Attach Lanyard Here **(SN 0300203771 through 0300239021, SN E300000100 through E300005116, SN 1300007289 through 1300007393)**	
13	1001171351	2	Decal - Capacity (Platform)	
14	1001171352	1	Decal - Capacity (Ground Control)	
16	1701504	1	Decal - Hydraulic Oil	
17	See Note	NSS	Decal - Bar Code (Note: Not Available for Purchase)	
18	1001131269	1	Decal - Patent	
19	See Note	NSS	Nameplate - Serial Number (Note: Not Available for Purchase)	
20	1701509	1	Decal - Manual	
21	1702300	8	Decal - Tie Down	
22	1701500	4	Decal - Lift	
23	1701529	4	Decal - Arrow	
24	3251243	1	Nameplate - 120V-60Hz	
25	0860520	1	Box, Manual Storage	
26	4751400	4	Washer, 1/4	
27	3311405	4	Nut, Lock 1/4	
28	3820001	2	Rivet	
29	1703984	1	Decal - Footswitch	
34	1705514	1	CSA Spec Decals (English/French)	
38	1701499	6	Decal - No Lift	
40	1704412	1	Decal - Hydraulic Oil Chart	
43	0641406	4	Bolt, 1/4 x 3/4	
44	1705429	1	Decal - Drive/Steer Instructions	
54	1703942	2	Decal - Warning Crushing	
57	1001223971	1	Decal - Yearly Inspection	
58	1001218985	1	Decal - ICES **(SN 0300241476 through 0300272360, SN E300005377 through E300007988, Except SN 0300272174 through 0300272184, Excluding E300007847)**	
100	1001232026	1	Decal - Platform Lanyard Kit (Not Shown) **(SN 0300239022 through 0300272360, SN E300005117 through E300007988, Except SN 0300272174 through 0300272184, Excluding E300007847)**	
101	1704277	3	Decal - Attach Lanyard Here	

SECTION 9 - DECALS

FIGURE 9-14. DECAL INSTALLATION - CSA SPEC (DUAL LANGUAGE - ENGLISH/FRENCH) (460SJ WITH DEUTZ AND GM ENGINES)

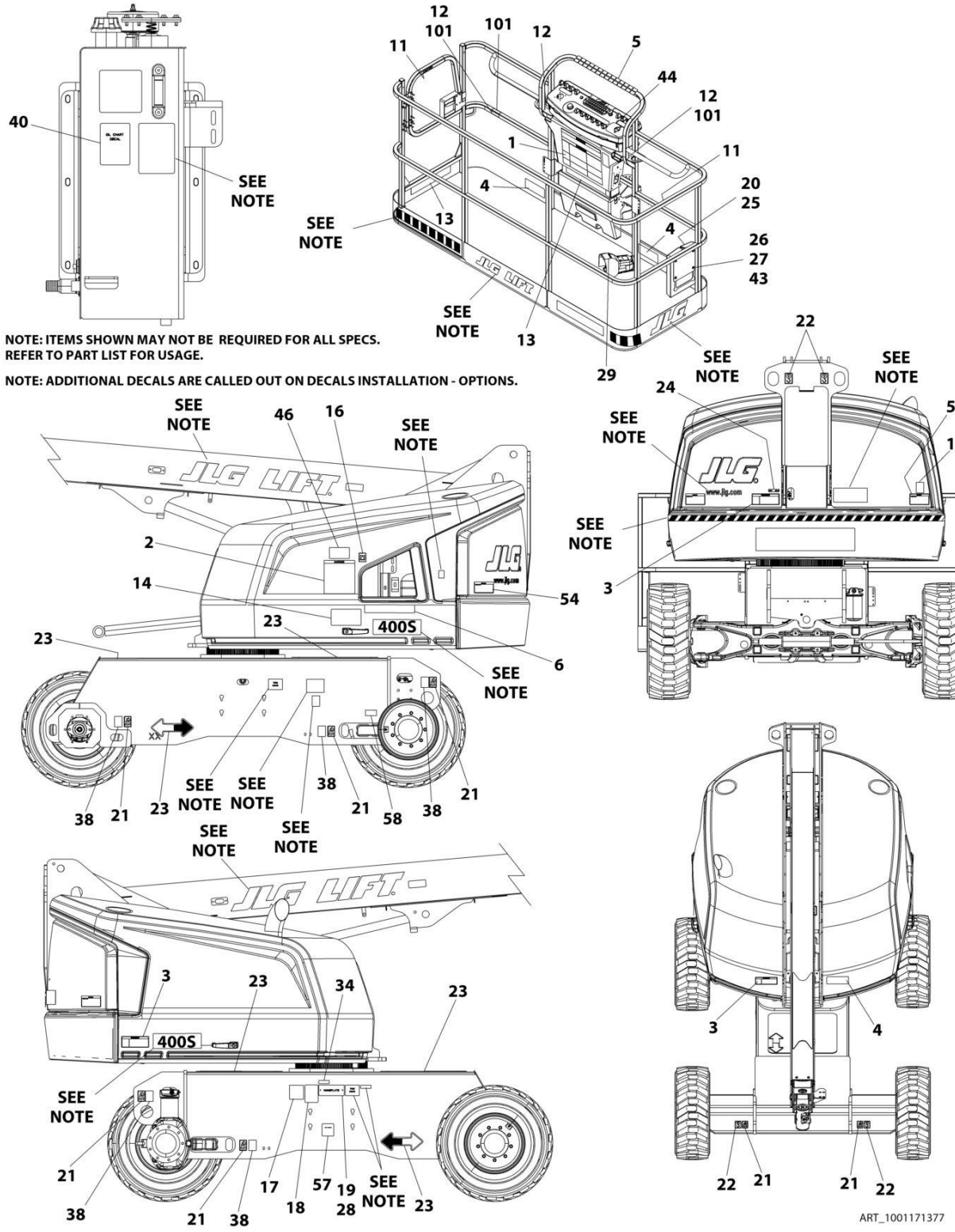

FIGURE 9-14. DECAL INSTALLATION - CSA SPEC (DUAL LANGUAGE - ENGLISH/FRENCH) (460SJ WITH DEUTZ AND GM ENGINES)

ITEM	PART NUMBER	QTY	DESCRIPTION	REV
	1001171545	Ref	DECAL INSTALLATION - REFERENCE CHART	M
	1001171377	Ref	DECAL INSTALLATION - CSA SPEC (DUAL LANGUAGE - ENGLISH/FRENCH) (460SJ)	G
1	1703924	1	Decal - Danger/Warning (Platform)	
2	1703930	1	Decal - Danger/Warning (Ground Control)	
3	1703936	3	Decal - Danger/Electrocution	
4	1703948	3	Decal - Warning Crushing	
5	1001173262	1	Decal - Legend (Platform)	
6	1001174313	1	Decal - Legend (Ground Control)	
11	1704000	2	Decal - No Hands	
12	1704277	3	Decal - Attach Lanyard Here **(SN 0300203771 through 0300239021, SN E300000100 through E300005116, SN 1300007289 through 1300007393)**	
13	1001171353	2	Decal - Capacity (Platform)	
14	1001171353	1	Decal - Capacity (Ground Control)	
16	1701504	1	Decal - Hydraulic Oil	
17	See Note	NSS	Decal - Bar Code (Note: Not Available for Purchase)	
18	1001131269	1	Decal - Patent	
19	See Note	NSS	Nameplate - Serial Number (Note: Not Available for Purchase)	
20	1701509	1	Decal - Manual	
21	1702300	8	Decal - Tie Down	
22	1701500	4	Decal - Lift	
23	1701529	4	Decal - Arrow	
24	3251243	1	Nameplate - 120V-60Hz	
25	0860520	1	Box, Manual Storage	
26	4751400	4	Washer, 1/4	
27	3311405	4	Nut, Lock 1/4	
28	3820001	2	Rivet	
29	1703984	1	Decal - Footswitch	
34	1705514	1	Decal - CSA	
38	1701499	6	Decal - No Lift	
40	1704412	1	Decal - Hydraulic Oil Chart	
43	0641406	4	Bolt, 1/4 x 3/4	
44	1705429	1	Decal - Drive/Steer Instruction	
54	1703953	2	Decal - Warning Crushing	
57	1001223971	1	Decal - Yearly Inspection (Not Shown)	
58	1001223453	1	Decal - ICES **(SN 0300241476 through 0300272360, SN E300005377 through E300007988, Except SN 0300272174 through 0300272184, Excluding E300007847)**	
100	1001232026	1	Decal - Platform Lanyard Kit (Not Shown) **(SN 0300239022 through 0300272360, SN E300005117 through E300007988, Except SN 0300272174 through 0300272184, Excluding E300007847)**	
101	1704277	3	Decal - Attach Lanyard Here	

SECTION 9 - DECALS

FIGURE 9-15. DECAL INSTALLATION - CSA SPEC (DUAL LANGUAGE - ENGLISH/FRENCH) (460SJ WITH KUBOTA ENGINES)

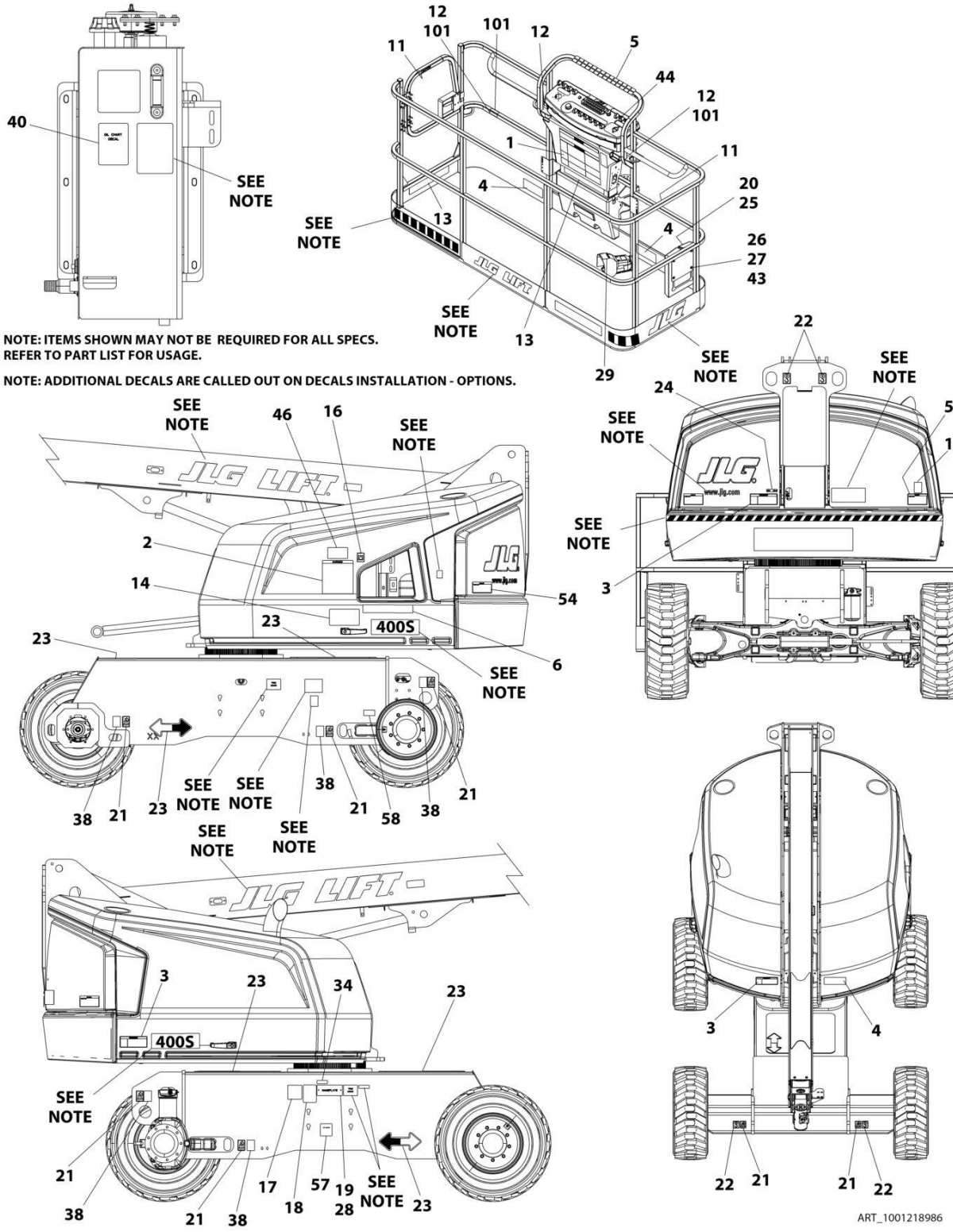

FIGURE 9-15. DECAL INSTALLATION - CSA SPEC (DUAL LANGUAGE - ENGLISH/FRENCH) (460SJ WITH KUBOTA ENGINES)

ITEM	PART NUMBER	QTY	DESCRIPTION	REV
	1001171545	Ref	DECAL INSTALLATION - REFERENCE CHART	M
	1001218986	Ref	DECAL INSTALLATION (CSA SPEC) (DUAL LANGUAGE - ENGLISH/FRENCH) (460SJ)	D
1	1703797	1	Decal - Danger/Warning (Platform)	
2	1703798	1	Decal - Danger/Warning (Ground Control)	
3	1703805	3	Decal - Danger/Electrocution	
4	1703804	3	Decal - Warning Crushing	
5	1001173262	1	Decal - Legend (Platform)	
6	1001216408	1	Decal - Legend (Ground Control)	
11	1702868	2	Decal - No Hands	
12	1704277	3	Decal - Attach Lanyard Here **(SN 0300203771 through 0300239021, SN E300000100 through E300005116, SN 1300007289 through 1300007393)**	
13	1001171353	2	Decal - Capacity (Platform)	
14	1001171353	1	Decal - Capacity (Ground Control)	
16	1701504	1	Decal - Hydraulic Oil	
17	See Note	NSS	Decal - Bar Code (Note: Not Available for Purchase)	
18	1001131269	1	Decal - Patent	
19	See Note	NSS	Nameplate - Serial Number (Note: Not Available for Purchase)	
20	1701509	1	Decal - Manual	
21	1702300	8	Decal - Tie Down	
22	1701500	4	Decal - Lift	
23	1701529	4	Decal - Arrow	
24	3251243	1	Nameplate - 120V-60Hz	
25	0860520	1	Box, Manual Storage	
26	4751400	4	Washer, 1/4	
27	3311405	4	Nut, Lock 1/4	
28	3820001	2	Rivet	
29	3820001	1	Decal - Footswitch	
34	1705514	1	CSA Spec Decals (English/French)	
38	1701499	6	Decal - No Lift	
40	1704412	1	Decal - Hydraulic Oil Chart	
43	0641406	4	Bolt, 1/4 x 3/4	
44	1705429	1	Decal - Drive/Steer Instructions	
54	1703942	2	Decal - Warning Crushing	
57	1001223971	1	Decal - Yearly Inspection	
58	1001223453	1	Decal - ICES **(SN 0300241476 through 0300272360, SN E300005377 through E300007988, Except SN 0300272174 through 0300272184, Excluding E300007847)**	
100	1001232026	1	Decal - Platform Lanyard Kit (Not Shown) **(SN 0300239022 through 0300272360, SN E300005117 through E300007988, Except SN 0300272174 through 0300272184, Excluding E300007847)**	
101	1704277	3	Decal - Attach Lanyard Here	

SECTION 9 - DECALS

FIGURE 9-16. DECAL INSTALLATION - JAPANESE SPEC (DUAL LANGUAGE - ENGLISH/JAPANESE) (400S)

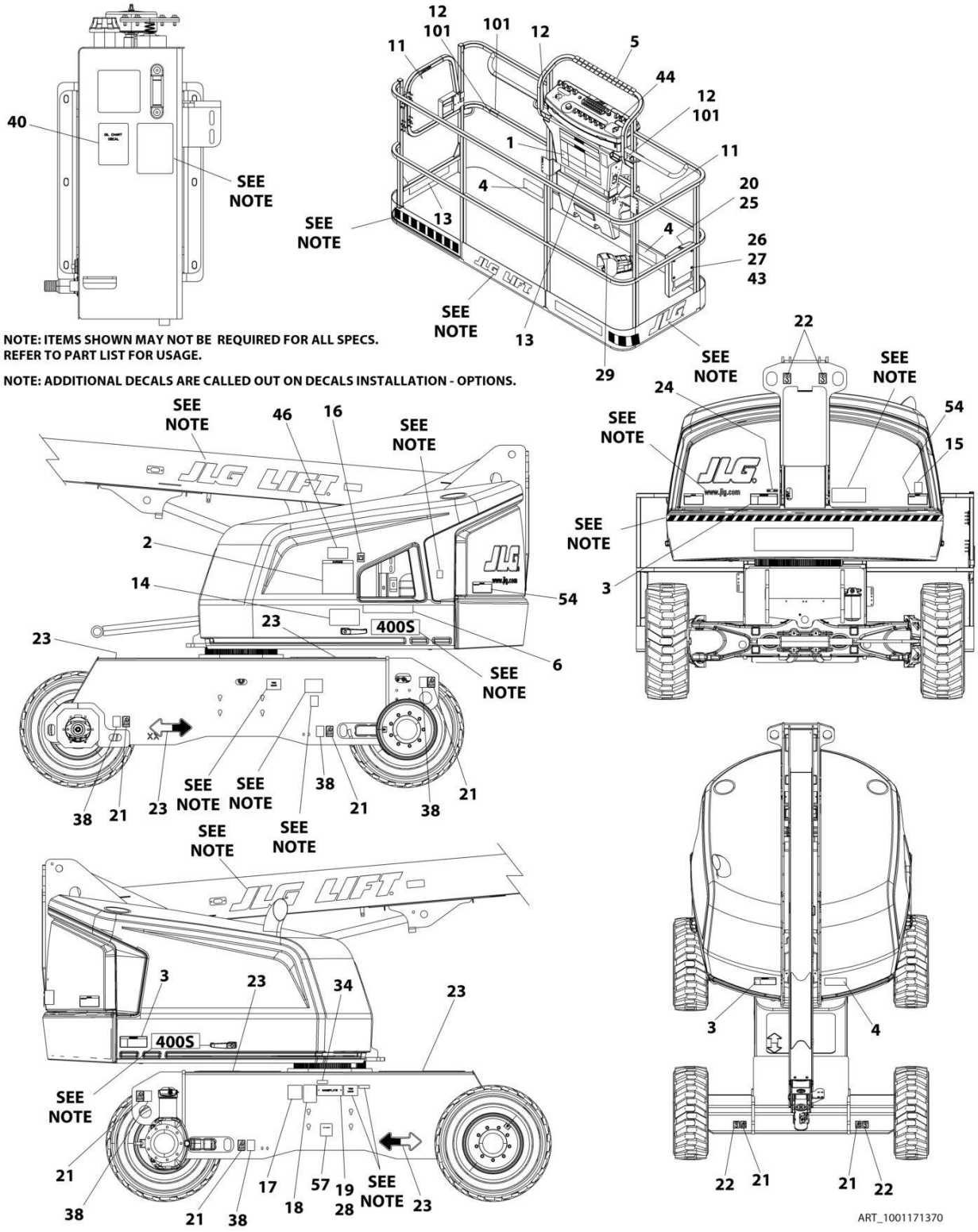

FIGURE 9-16. DECAL INSTALLATION - JAPANESE SPEC (DUAL LANGUAGE - ENGLISH/JAPANESE) (400S)

ITEM	PART NUMBER	QTY	DESCRIPTION	REV
	1001171545	Ref	DECAL INSTALLATION - REFERENCE CHART	M
	1001171370	Ref	DECAL INSTALLATION - JAPANESE SPEC (DUAL LANGUAGE - ENGLISH/JAPANESE) (400S)	F
1	1703926	1	Decal - Danger/Warning (Platform)	
2	1703932	1	Decal - Danger/Warning (Ground Control)	
3	1703938	3	Decal - Danger/Electrocution	
4	1703950	3	Decal - Warning Crushing	
5	1001173262	1	Decal - Legend (Platform)	
6	1001174313	1	Decal - Legend (Ground Control)	
12	1704277	3	Decal - Attach Lanyard Here **(SN 0300203771 through 0300239021, SN E300000100 through E300005116, SN 1300007289 through 1300007393)**	
13	1001171341	2	Decal - Capacity (Platform)	
14	1001171342	1	Decal - Capacity (Ground Control)	
16	1701504	1	Decal - Hydraulic Oil	
17	See Note	NSS	Decal - Bar Code (Note: Not Available for Purchase)	
19	See Note	NSS	Nameplate - Serial Number (Note: Not Available for Purchase)	
20	1701509	1	Decal - Manual	
21	1702300	8	Decal - Tie Down	
22	1701500	4	Decal - Lift	
23	1701529	4	Decal - Arrow	
25	0860520	1	Box, Manual Storage	
26	4751400	4	Washer, 1/4	
27	3311405	4	Nut, Lock 1/4	
28	3820001	2	Rivet	
29	1703980	1	Decal - Footswitch	
38	1701499	6	Decal - No Lift	
40	1704412	1	Decal - Hydraulic Oil Chart	
43	0641406	4	Bolt, 1/4 x 3/4	
44	1705426	1	Decal - Drive/Steer Instruction	
54	1703953	2	Decal - Warning Crushing	
57	1001224053	1	Decal - Yearly Inspection (Not Shown)	
100	1001232026	1	Decal - Platform Lanyard Kit (Not Shown) **(SN 0300239022 through 0300272360, SN E300005117 through E300007988, Except SN 0300272174 through 0300272184, Excluding E300007847)**	
101	1704277	3	Decal - Attach Lanyard Here	

SECTION 9 - DECALS

FIGURE 9-17. DECAL INSTALLATION - JAPANESE SPEC (DUAL LANGUAGE - ENGLISH/JAPANESE) (460SJ)

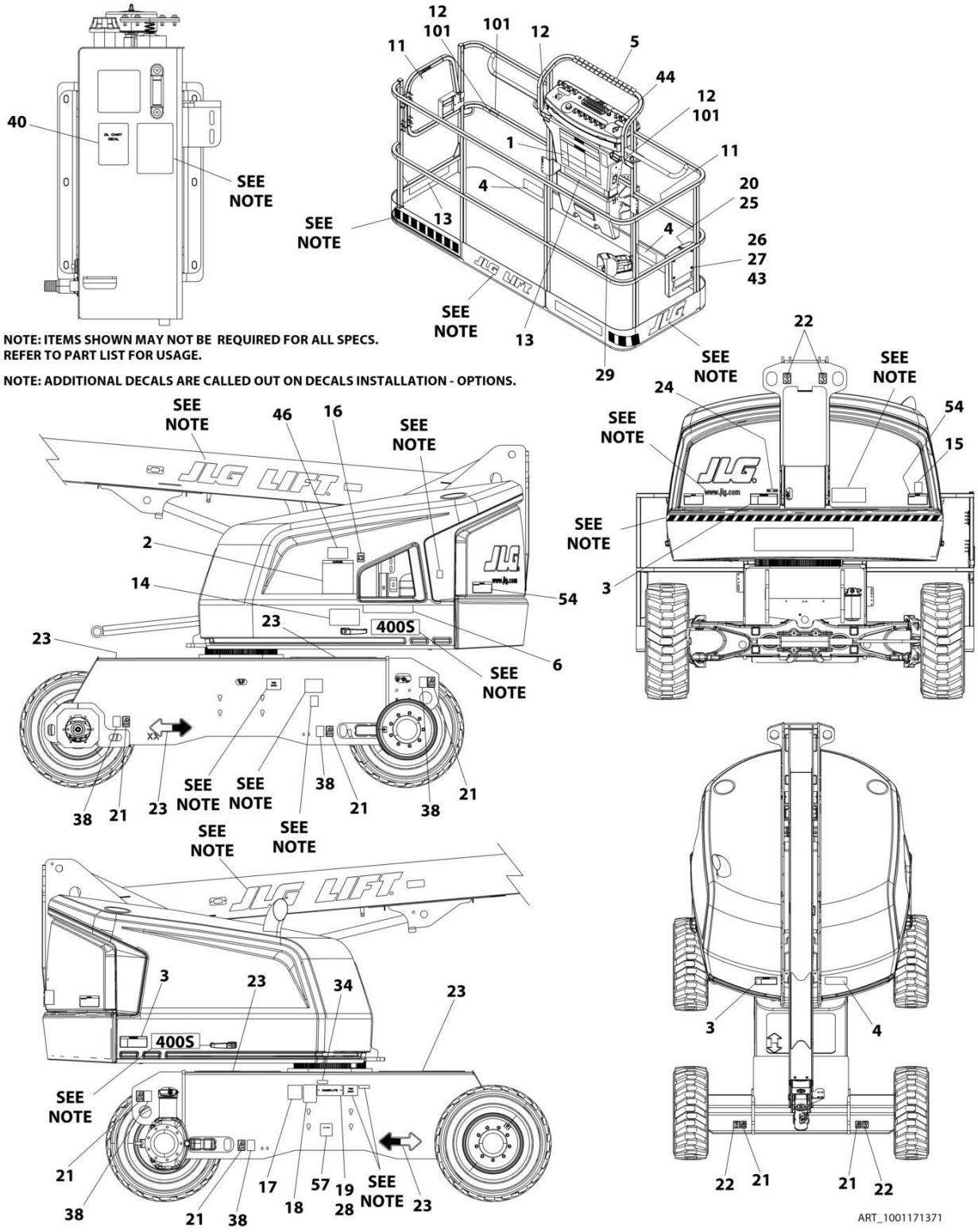

FIGURE 9-17. DECAL INSTALLATION - JAPANESE SPEC (DUAL LANGUAGE - ENGLISH/JAPANESE) (460SJ)

ITEM	PART NUMBER	QTY	DESCRIPTION	REV
	1001171545	Ref	DECAL INSTALLATION - REFERENCE CHART	M
	1001171371	Ref	DECAL INSTALLATION - JAPANESE SPEC (DUAL LANGUAGE - ENGLISH/JAPANESE) (460SJ)	F
1	1703926	1	Decal - Danger/Warning (Platform)	
2	1703932	1	Decal - Danger/Warning (Ground Control)	
3	1703938	3	Decal - Danger/Electrocution	
4	1703950	3	Decal - Warning Crushing	
5	1001173262	1	Decal - Legend (Platform)	
6	1001174313	1	Decal - Legend (Ground Control)	
12	1704277	3	Decal - Attach Lanyard Here **(SN 0300203771 through 0300239021, SN E300000100 through E300005116, SN 1300007289 through 1300007393)**	
13	1001171343	2	Decal - Capacity (Platform)	
14	1001171343	1	Decal - Capacity (Ground Control)	
16	1701504	1	Decal - Hydraulic Oil	
17	See Note	NSS	Decal - Bar Code (Note: Not Available for Purchase)	
19	See Note	NSS	Nameplate - Serial Number (Note: Not Available for Purchase)	
20	1701509	1	Decal - Manual	
21	1702300	8	Decal - Tie Down	
22	1701500	4	Decal - Lift	
23	1701529	4	Decal - Arrow	
25	0860520	1	Box, Manual Storage	
26	4751400	4	Washer, 1/4	
27	3311405	4	Nut, Lock 1/4	
28	3820001	2	Rivet	
29	1703980	1	Decal - Footswitch	
38	1701499	6	Decal - No Lift	
40	1704412	1	Decal - Hydraulic Oil Chart	
43	0641406	4	Bolt, 1/4 x 3/4	
44	1705426	1	Decal - Drive/Steer Instruction	
54	1703953	2	Decal - Warning Crushing	
57	1001224053	1	Decal - Yearly Inspection (Not Shown)	
100	1001232026	1	Decal - Platform Lanyard Kit (Not Shown) **(SN 0300239022 through 0300272360, SN E300005117 through E300007988, Except SN 0300272174 through 0300272184, Excluding E300007847)**	
101	1704277	3	Decal - Attach Lanyard Here	

SECTION 9 - DECALS

FIGURE 9-18. DECAL INSTALLATION - KOREAN SPEC (DUAL LANGUAGE - ENGLISH/KOREAN) (400S)

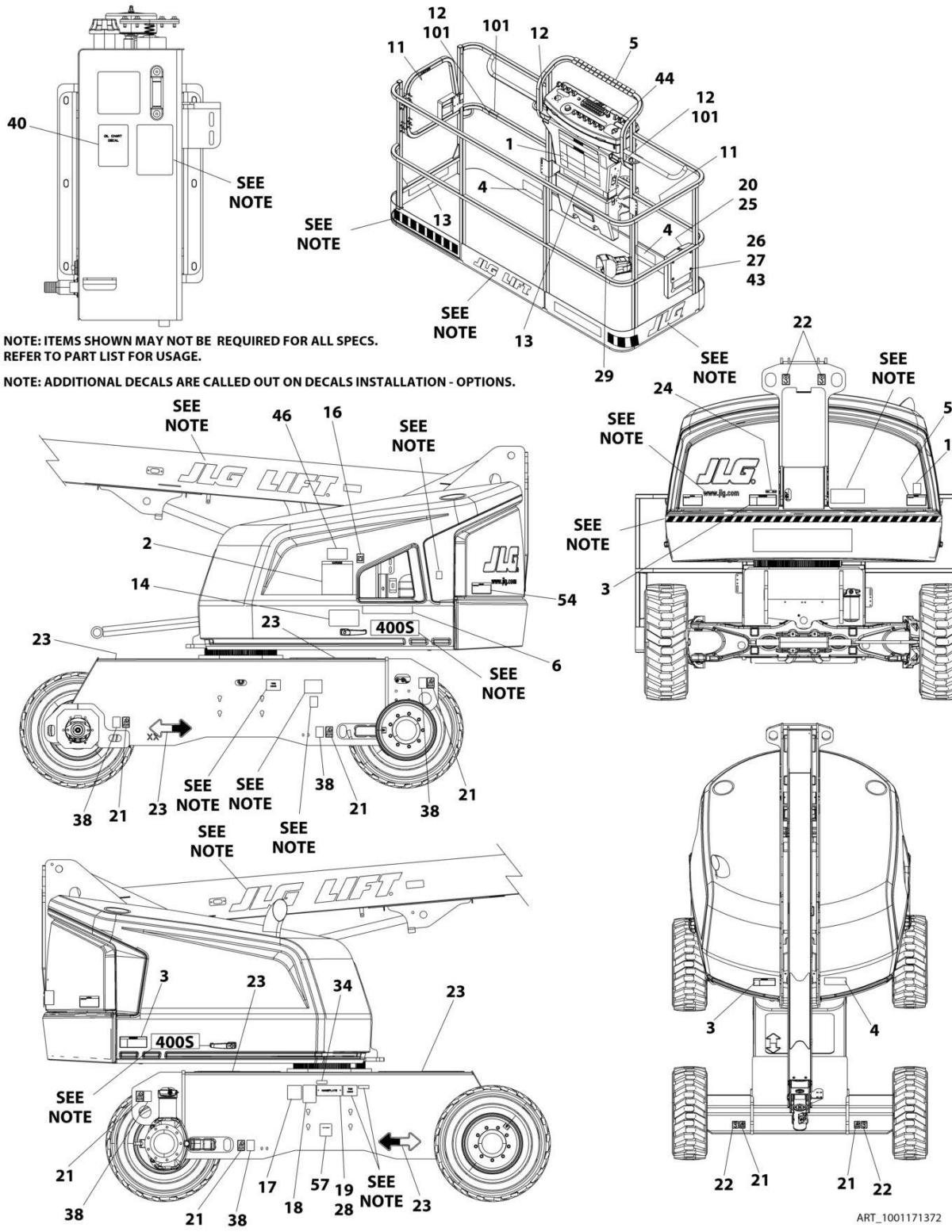

FIGURE 9-18. DECAL INSTALLATION - KOREAN SPEC (DUAL LANGUAGE - ENGLISH/KOREAN) (400S)

ITEM	PART NUMBER	QTY	DESCRIPTION	REV
	1001171545	Ref	DECAL INSTALLATION - REFERENCE CHART	M
	1001171372	Ref	DECAL INSTALLATION - KOREAN SPEC (DUAL LANGUAGE - ENGLISH/KOREAN) (400S)	F
1	1703927	1	Decal - Danger/Warning (Platform)	
2	1703933	1	Decal - Danger/Warning (Ground Control)	
3	1703939	3	Decal - Danger/Electrocution	
4	1703951	3	Decal - Warning Crushing	
5	1001173262	1	Decal - Legend (Platform)	
6	1001174313	1	Decal - Legend (Ground Control)	
12	1704277	3	Decal - Attach Lanyard Here **(SN 0300203771 through 0300239021, SN E300000100 through E300005116, SN 1300007289 through 1300007393)**	
13	1001171345	2	Decal - Capacity (Platform)	
14	1001171346	1	Decal - Capacity (Ground Control)	
16	1701504	1	Decal - Hydraulic Oil	
17	See Note	NSS	Decal - Bar Code (Note: Not Available for Purchase)	
19	See Note	NSS	Nameplate - Serial Number (Note: Not Available for Purchase)	
20	1701509	1	Decal - Manual	
21	1702300	8	Decal - Tie Down	
22	1701500	4	Decal - Lift	
23	1701529	4	Decal - Arrow	
25	0860520	1	Box, Manual Storage	
26	4751400	4	Washer, 1/4	
27	3311405	4	Nut, Lock 1/4	
28	3820001	2	Rivet	
29	1703981	1	Decal - Footswitch	
38	1701499	6	Decal - No Lift	
40	1704412	1	Decal - Hydraulic Oil Chart	
43	0641406	4	Bolt, 1/4 x 3/4	
44	1705427	1	Decal - Drive/Steer Instruction	
54	1703953	2	Decal - Warning Crushing	
57	1001224048	1	Decal - Yearly Inspection (Not Shown)	
100	1001232026	1	Decal - Platform Lanyard Kit (Not Shown) **(SN 0300239022 through 0300272360, SN E300005117 through E300007988, Except SN 0300272174 through 0300272184, Excluding E300007847)**	
101	1704277	3	Decal - Attach Lanyard Here	

SECTION 9 - DECALS

FIGURE 9-19. DECAL INSTALLATION - KOREAN SPEC (DUAL LANGUAGE - ENGLISH/KOREAN) (460SJ)

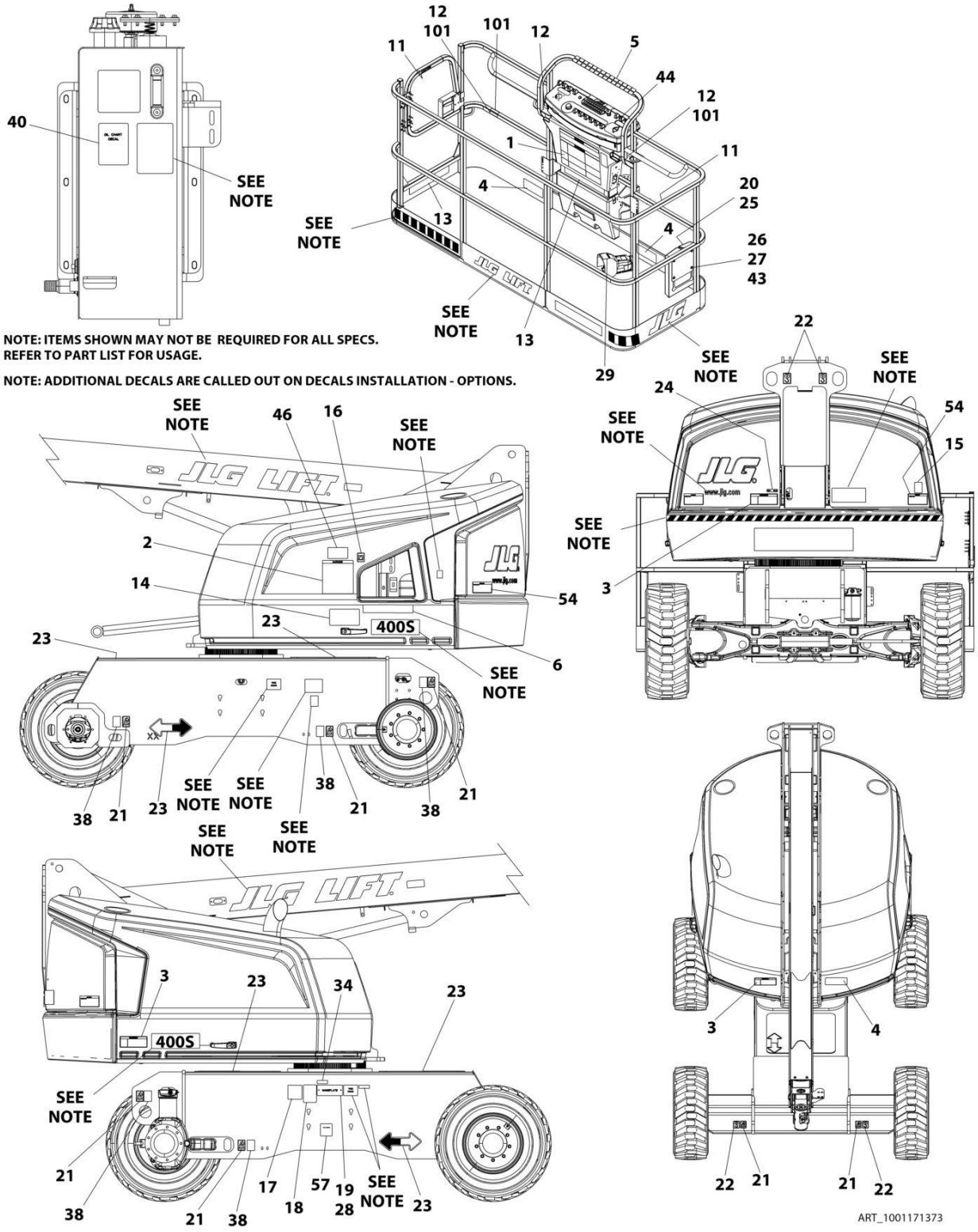

FIGURE 9-19. DECAL INSTALLATION - KOREAN SPEC (DUAL LANGUAGE - ENGLISH/KOREAN) (460SJ)

ITEM	PART NUMBER	QTY	DESCRIPTION	REV
	1001171545	Ref	DECAL INSTALLATION - REFERENCE CHART	M
	1001171373	Ref	DECAL INSTALLATION - KOREAN SPEC (DUAL LANGUAGE - ENGLISH/KOREAN) (460SJ)	F
1	1703927	1	Decal - Danger/Warning (Platform)	
2	1703933	1	Decal - Danger/Warning (Ground Control)	
3	1703939	3	Decal - Danger/Electrocution	
4	1703951	3	Decal - Warning Crushing	
5	1001173262	1	Decal - Legend (Platform)	
6	1001174313	1	Decal - Legend (Ground Control)	
12	1704277	3	Decal - Attach Lanyard Here **(SN 0300203771 through 0300239021, SN E300000100 through E300005116, SN 1300007289 through 1300007393)**	
13	1001171347	2	Decal - Capacity (Platform)	
14	1001171347	1	Decal - Capacity (Ground Control)	
16	1701504	1	Decal - Hydraulic Oil	
17	See Note	NSS	Decal - Bar Code (Note: Not Available for Purchase)	
19	See Note	NSS	Nameplate - Serial Number (Note: Not Available for Purchase)	
20	1701509	1	Decal - Manual	
21	1702300	8	Decal - Tie Down	
22	1701500	4	Decal - Lift	
23	1701529	4	Decal - Arrow	
25	0860520	1	Box, Manual Storage	
26	4751400	4	Washer, 1/4	
27	3311405	4	Nut, Lock 1/4	
28	3820001	2	Rivet	
29	1703981	1	Decal - Footswitch	
38	1701499	6	Decal - No Lift	
40	1704412	1	Decal - Hydraulic Oil Chart	
43	0641406	4	Bolt, 1/4 x 3/4	
44	1705427	1	Decal - Drive/Steer Instruction	
54	1703953	2	Decal - Warning Crushing	
57	1001224048	1	Decal - Yearly Inspection (Not Shown)	
100	1001232026	1	Decal - Platform Lanyard Kit (Not Shown) **(SN 0300239022 through 0300272360, SN E300005117 through E300007988, Except SN 0300272174 through 0300272184, Excluding E300007847)**	
101	1704277	3	Decal - Attach Lanyard Here	

SECTION 9 - DECALS

FIGURE 9-20. DECAL INSTALLATION - LATIN AMERICAN SPEC (DUAL LANGUAGE - ENGLISH/SPANISH) (400S)

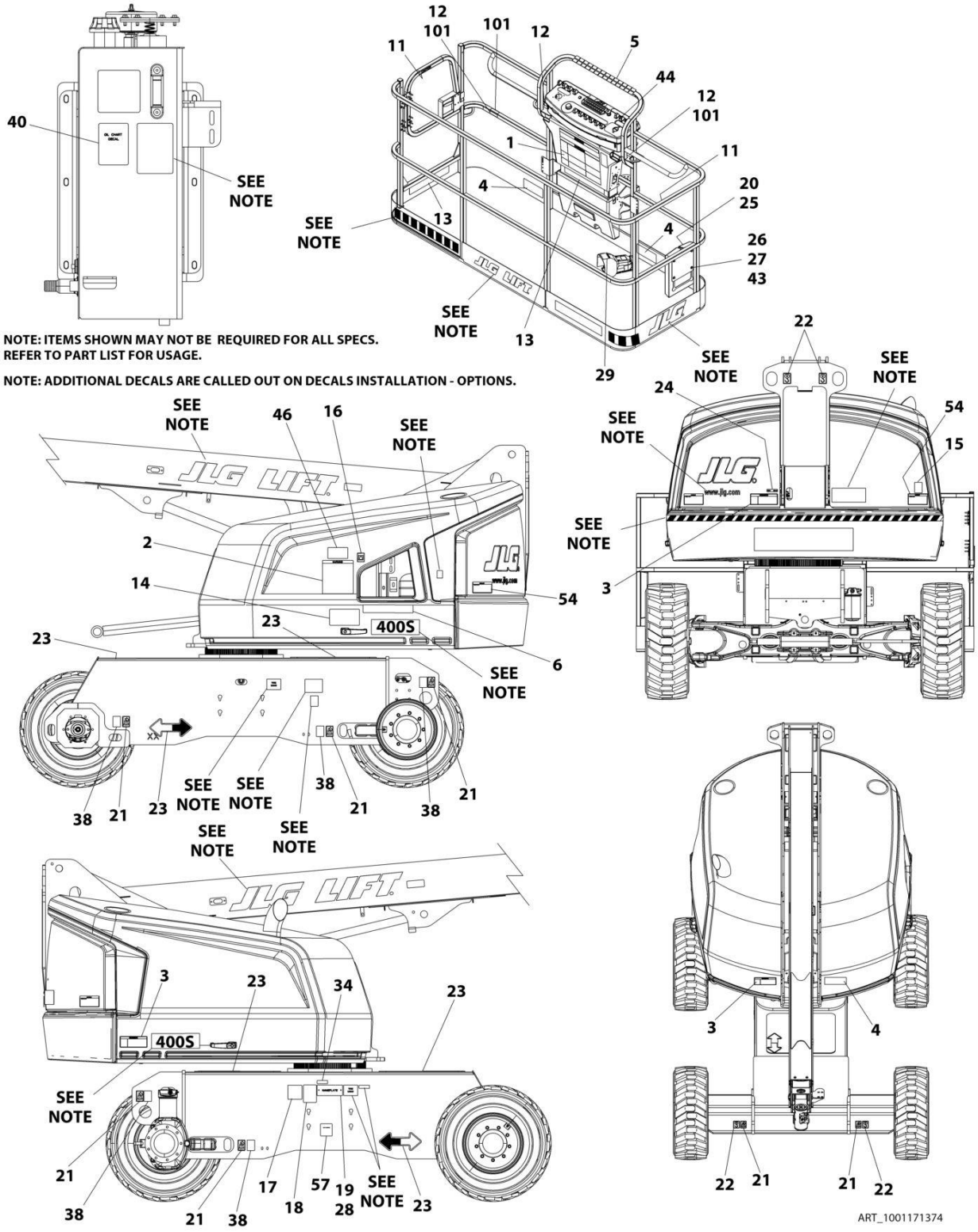

FIGURE 9-20. DECAL INSTALLATION - LATIN AMERICAN SPEC (DUAL LANGUAGE - ENGLISH/SPANISH) (400S)

ITEM	PART NUMBER	QTY	DESCRIPTION	REV
	1001171545	Ref	DECAL INSTALLATION - REFERENCE CHART	M
	1001171374	Ref	DECAL INSTALLATION - LATIN AMERICAN SPEC (DUAL LANGUAGE - ENGLISH/SPANISH) (400S)	F
1	1703923	1	Decal - Danger/Warning (Platform)	
2	1703929	1	Decal - Danger/Warning (Ground Control)	
3	1703935	3	Decal - Danger/Electrocution	
4	1703947	3	Decal - Warning Crushing	
5	1001173262	1	Decal - Legend (Platform)	
6	1001174313	1	Decal - Legend (Ground Control)	
11	1704001	2	Decal - No Hands	
12	1704277	3	Decal - Attach Lanyard Here **(SN 0300203771 through 0300239021, SN E300000100 through E300005116, SN 1300007289 through 1300007393)**	
13	1001171349	2	Decal - Capacity (Platform)	
14	1001171350	1	Decal - Capacity (Ground Control)	
16	1701504	1	Decal - Hydraulic Oil	
17	See Note	NSS	Decal - Bar Code (Note: Not Available for Purchase)	
19	See Note	NSS	Nameplate - Serial Number (Note: Not Available for Purchase)	
20	1701509	1	Decal - Manual	
21	1702300	8	Decal - Tie Down	
22	1701500	4	Decal - Lift	
23	1701529	4	Decal - Arrow	
24	3251243	1	Nameplate - 120V-60Hz	
25	0860520	1	Box, Manual Storage	
26	4751400	4	Washer, 1/4	
27	3311405	4	Nut, Lock 1/4	
28	3820001	2	Rivet	
29	1703983	1	Decal - Footswitch	
38	1701499	6	Decal - No Lift	
40	1704412	1	Decal - Hydraulic Oil Chart	
43	0641406	4	Bolt, 1/4 x 3/4	
44	1705910	1	Decal - Drive/Steer Instruction	
54	1703953	2	Decal - Warning Crushing	
57	1001224049	1	Decal - Yearly Inspection (Not Shown)	
100	1001232026	1	Decal - Platform Lanyard Kit (Not Shown) **(SN 0300239022 through 0300272360, SN E300005117 through E300007988, Except SN 0300272174 through 0300272184, Excluding E300007847)**	
101	1704277	3	Decal - Attach Lanyard Here	

SECTION 9 - DECALS

FIGURE 9-21. DECAL INSTALLATION - LATIN AMERICAN SPEC (DUAL LANGUAGE - ENGLISH/SPANISH) (460SJ)

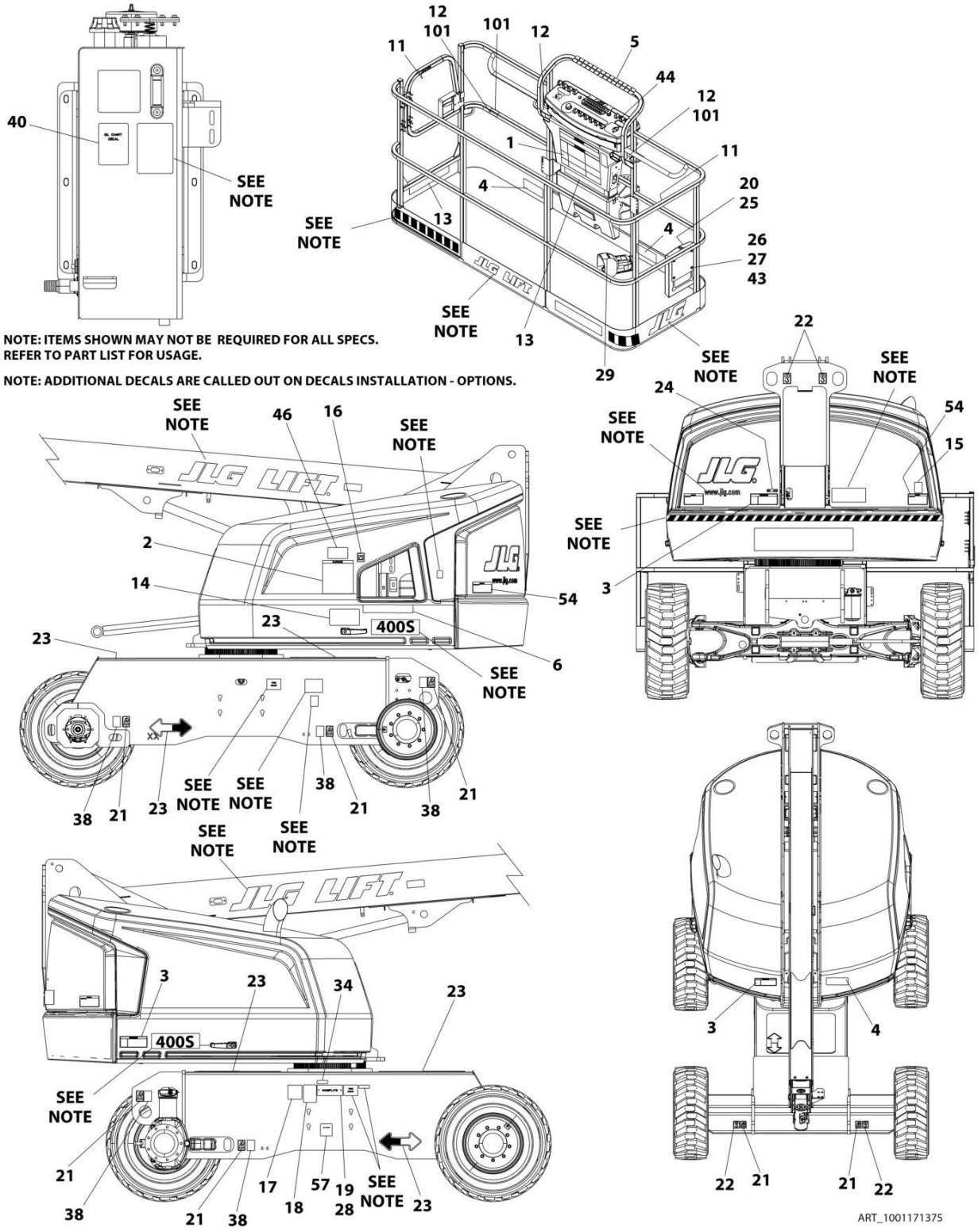

FIGURE 9-21. DECAL INSTALLATION - LATIN AMERICAN SPEC (DUAL LANGUAGE - ENGLISH/SPANISH) (460SJ)

ITEM	PART NUMBER	QTY	DESCRIPTION	REV
	1001171545	Ref	DECAL INSTALLATION - REFERENCE CHART	M
	1001171375	Ref	DECAL INSTALLATION - LATIN AMERICAN SPEC (DUAL LANGUAGE - ENGLISH/SPANISH) (460SJ)	G
1	1703923	1	Decal - Danger/Warning (Platform)	
2	1703929	1	Decal - Danger/Warning (Ground Control)	
3	1703935	3	Decal - Danger/Electrocution	
4	1703947	3	Decal - Warning Crushing	
5	1001173262	1	Decal - Legend (Platform)	
6	1001174313	1	Decal - Legend (Ground Control)	
11	1704001	2	Decal - No Hands	
12	1704277	3	Decal - Attach Lanyard Here **(SN 0300203771 through 0300239021, SN E300000100 through E300005116, SN 1300007289 through 1300007393)**	
13	1001171337	2	Decal - Capacity (Platform)	
14	1001171337	1	Decal - Capacity (Ground Control)	
16	1701504	1	Decal - Hydraulic Oil	
17	See Note	NSS	Decal - Bar Code (Note: Not Available for Purchase)	
19	See Note	NSS	Nameplate - Serial Number (Note: Not Available for Purchase)	
20	1701509	1	Decal - Manual	
21	1702300	8	Decal - Tie Down	
22	1701500	4	Decal - Lift	
23	1701529	4	Decal - Arrow	
24	3251243	1	Nameplate - 120V-60Hz	
25	0860520	1	Box, Manual Storage	
26	4751400	4	Washer, 1/4	
27	3311405	4	Nut, Lock 1/4	
28	3820001	2	Rivet	
29	1703983	1	Decal - Footswitch	
38	1701499	6	Decal - No Lift	
40	1704412	1	Decal - Hydraulic Oil Chart	
43	0641406	4	Bolt, 1/4 x 3/4	
44	1705910	1	Decal - Drive/Steer Instruction	
54	1703953	2	Decal - Warning Crushing	
57	1001224049	1	Decal - Yearly Inspection (Not Shown)	
100	1001232026	1	Decal - Platform Lanyard Kit (Not Shown) **(SN 0300239022 through 0300272360, SN E300005117 through E300007988, Except SN 0300272174 through 0300272184, Excluding E300007847)**	
101	1704277	3	Decal - Attach Lanyard Here	

FIGURE 9-22. DECAL INSTALLATION - OPTIONS

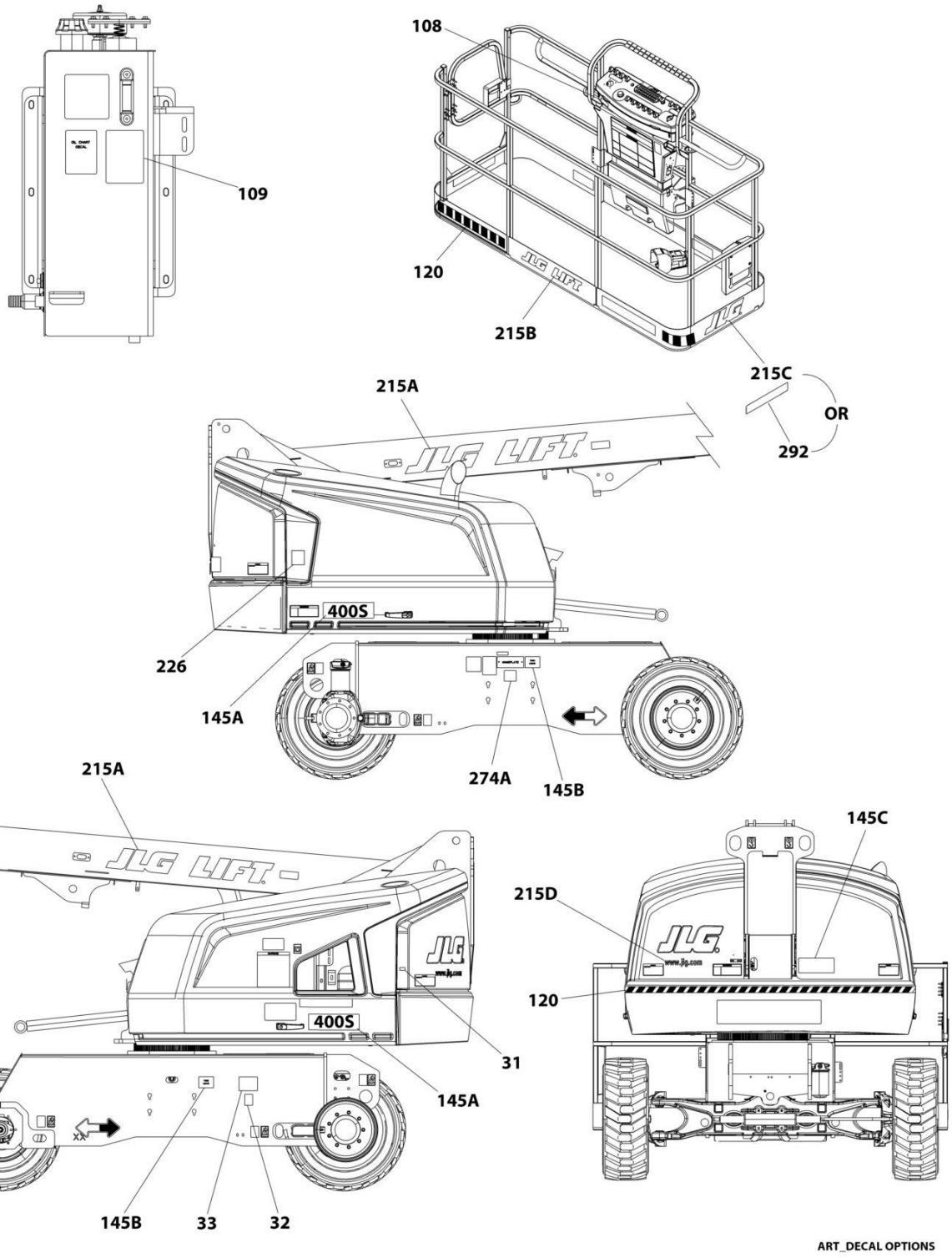

FIGURE 9-22. DECAL INSTALLATION - OPTIONS

ITEM	PART NUMBER	QTY	DESCRIPTION	REV
	1001171545	Ref	DECAL INSTALLATION - REFERENCE CHART	M
	1001166224	Ref	DECAL INSTALLATION - OPTIONS	Q
31	1701505	1	Decal - Diesel Fuel	
31	1701542	1	Decal - Gas	
32	1701543	1	Decal - LPG	
33	1700818	1	Decal - LP Gas Liquid Withdrawal System (ANSI Spec)	
33	1704271	1	Decal - LP Gas Liquid Withdrawal System (CSA Spec)	
33	1702720	1	Decal - LP Gas Liquid Withdrawal System (ANSI Export and China Specs)	
33	1001119661	1	Decal - LP Gas Liquid Withdrawal System (ANSI, ANSI Export and China Specs)	
108	1001231801	1	Decal - Proposition 65 (Diesel Machines) (USA Built Machines) **(SN 0300246560 through 0300272360, Except SN 0300272174 through 0300272184)**	
108	1001236338	1	Decal - Proposition 65 (Gas Machines) (USA Built Machines) **(SN 0300246560 through 0300256523)**	
109	1702788	1	Decal - Biodegradeable Hydraulic Fluid (All Specs except German Spec)	
109	1703479	1	Decal - Biodegradeable Hydraulic Fluid (German Spec)	
109	1704174	1	Decal - SYN Biodegradeable Hydraulic Fluid (All Specs except German Spec)	
109	1704175	1	Decal - SYN Biodegradeable Hydraulic Fluid (German Spec)	
120	1001178415	Ref	Warning Strip Installation (Not Shown)	A
120	4420051	14.5 ft /4.42m	Tape, Safety	
145	1001174349	Ref	Decal - Model Designation (400S) (Not Shown)	B
145	1001174350	Ref	Decal - Model Designation (460SJ) (Not Shown)	B
145A	1704472	2	Decal - 400S	
145A	1704473	2	Decal - 460SJ	
145B	1001195745	2	Decal - Max Tire Load (400S)	
145B	1001195746	2	Decal - Max Tire Load (460SJ)	
145C	1001177451	1	Decal - Lift Diagram	
215	1001178433	Ref	Decal Installation - JLG Logo (Not Shown)	A
215A	1702861	2	Decal - JLG	
215B	1702774	1	Decal - JLG	
215C	1702773	1	Decal - JLG	
215D	1704885	1	Decal - Website	
226		Ref	Decal - Warning Explosion/Fire (Diesel Machines Only)	
226	1704972	1	Decal - Warning Explosion/Fire (ANSI Spec)	
226	1706064	1	Decal - Warning Explosion/Fire (CSA Spec - Dual Language English/French)	
226	1706098	1	Decal - Warning Explosion/Fire Australian and CE Specs)	
226	1706059	1	Decal - Warning Explosion/Fire (Brazil Spec - Dual Language English/Portuguese)	
226	1706060	1	Decal - Warning Explosion/Fire (Chinese Spec - Dual Language English/Chinese)	
226	1706061	1	Decal - Warning Explosion/Fire (Korean Spec - Dual Language English/Korean)	
226	1706062	1	Decal - Warning Explosion/Fire (Japanese Spec - Dual Language English/Japanese)	
226	1706063	1	Decal - Warning Explosion/Fire (Latin American - Dual Language English/Spanish)	
253	1001143852	1	Decal - Emission Compliance (Machines with Diesel Engines)	

SECTION 9 - DECALS

ITEM	PART NUMBER	QTY	DESCRIPTION	REV
			(ANSI Export, Australian, CE and China Specs) (Not Shown)	
274	1001214029	1	Decal - EAC Installation (CIS and Russia Specs)	
274A	1001173703	1	Decal - EAC	
292	1001171335	1	Decal - Dual Capacity (ANSI Spec)	
292	1001171337	1	Decal - Max Capacity (ANSI Spec)	
292	1001171359	1	Decal - Dual Capacity (Brazil Spec - Dual Language Portuguese/Spanish)	
292	1001171361	1	Decal - Max Capacity (Brazil Spec - Dual Language Portuguese/Spanish)	
292	1001171355	1	Decal - Dual Capacity (Chinese Spec - Dual Language English/Chinese)	
292	1001171357	1	Decal - Max Capacity (Chinese Spec - Dual Language English/Chinese)	
292	1001171351	1	Decal - Dual Capacity (CSA Spec - Dual Language English/French)	
292	1001171353	1	Decal - Max Capacity (CSA Spec - Dual Language English/French)	
292	1001171345	1	Decal - Dual Capacity (Korean Spec - Dual Language English/Korean)	
292	1001171347	1	Decal - Max Capacity (Korean Spec - Dual Language English/Korean)	
292	1001171349	1	Decal - Dual Capacity (Latin American - Dual Language English/Spanish)	
292	1001171337	1	Decal - Max Capacity (Latin American - Dual Language English/Spanish)	
292	1001171341	1	Decal - Dual Capacity (Japanese Spec - Dual Language English/Japanese)	
292	1001171343	1	Decal - Max Capacity (Japanese Spec - Dual Language English/Japanese)	

SECTION 10 - RECOMMENDED SERVICE PARTS STOCK

SECTION 10 - RECOMMENDED SERVICE PARTS STOCK

FIGURE 10-1. RECOMMENDED SERVICE PARTS STOCK

ITEM	PART NUMBER	QTY	DESCRIPTION	REV
		Ref	Note: The following list will service one machine (built to current production per date on the front cover) with emergency repair parts which can be installed in the field. Parts from the list should be replaced when inventory is depleted to keep service parts stock supplied. For further information, contact your JLG dealer or the JLG Industries Parts Department.	
		Ref	STANDARD PARTS	
	7024885	1	Coil	
	70002386	1	Coil	
	70003788	1	Coil	
	70004897	1	Coil	
	1001166538	1	Controller Assembly (Drive and Steer)	
	1001166539	1	Controller Assembly (Lift and Swing)	
	70010383	1	Element, Filter Charge Pump (Includes O-Ring)	
	70002838	1	Fill Cap Assembly (Includes Cap, Chain and Fill Basket)	
	70003614	1	Filter Kit (Includes Hydraulic Element, Breather Element and Gasket)	
	3740067	1	Relay	
	3740140	1	Relay	
	2860030	1	Key, Replacement	
	4360328	1	Switch, Toggle	
	4360387	1	Switch, Push Button	
	4360475	1	Switch, Emergency Stop	
	4360476	1	Switch, Contact Block	
	4360407	1	Switch, Potentiometer	
	1001155045	1	Switch, Toggle	
	1001159256	1	Switch, Toggle	
	1001161709	1	Switch, Toggle	
		Ref	VARIABLE PARTS	
	1001181045	1	Breaker, 30mA/16 Amp	
	70003783	12	Element, Air Cleaner (Deutz 2.9L4 and Deutz D2011 Engines)	
	1001147813	12	Element, Air Cleaner (Kubota Engines)	
	70004020	12	Element, Air Cleaner (GM Engines)	
	7016331	12	Filter, Oil (Deutz Engines)	
	70006023	1	Filter, Oil (Kubota Engines)	
	7027965	12	Filter, Oil (GM Engines)	
	70025153	12	Filter, Fuel (Deutz 2.9L4 Engines)	
	70025161	12	Filter, Fuel (Deutz 2.9L4 Engines)	
	7020023	12	Filter, Fuel (Deutz D2011 Engines)	
	70003463	12	Filter, Fuel - RME Resistant (Deutz D2011 and Deutz D2011 (Stage V) Engines)	
	7027972	12	Filter, Fuel (GM Engines)	
	7017992	12	Filter, Fuel (Kubota Engines)	
	1001196634	1	Fuse - 2Amp	
	8229242	1	Fuse - 5Amp	
	80983191	1	Fuse - 10Amp	
	8229244	1	Fuse - 15Amp	
	70023592	1	Fuse - 20Amp	
	70023593	1	Fuse - 30Amp	
	2400082	1	Fuse - 40 Amp	

ITEM	PART NUMBER	QTY	DESCRIPTION	REV
	2940074	1	Latch (Machines with Gate)	
	1001170094	1	Module, Ground Control	
	1001138228	1	Module, Power Relay	
	70025210	1	Module, ECU (Deutz 2.9L4 Engines)	
	70002895	1	Module, ECU (GM Engines)	
	70006061	1	Module, ECU (Kubota Engines)	
	1001157196	1	Module, Platform Control	
	1001142683	1	Module, Beacon Light Control	
	1001161710	1	Switch, Toggle (Dual Fuel Machines - GM and Kubota Engines)	
	4360336	1	Switch, Toggle (Generator Option)	
	4360057	1	Switch, Limit (Soft Touch Option)	
	4360387	1	Switch, Toggle (Soft Touch Option)	
	1001137673	1	Switch, SkyGuard Assembly (CE Specs Machines)	

SECTION 11 - SPECIAL OPTIONS

SECTION 11 - SPECIAL OPTIONS

FIGURE 11-1. SPECIAL OPTIONS

ITEM	PART NUMBER	QTY	DESCRIPTION	REV
		Ref	Note: This list is to accommodate machines ordered with special equipment. Options may not be applicable to all models. For more specific parts information contact JLG Parts Department.	
		Ref	MISCELLANEOUS SPECIAL OPTIONS	
	1001100326	Ref	AC Box at Platform - 110V IEC Yellow (CE Spec) **(SN 0300203771 through 0300220609)**	
	1001100327	Ref	AC Box at Platform - 220V IEC Blue (CE Spec) **(SN 0300203771 through 0300220609)**	
	1001100331	Ref	AC Box at Platform - 220V CEE7 2 x 4 Post Ground (CE Spec) **(SN 0300203771 through 0300220609)**	
	1001100333	Ref	AC Box at Platform - 220V CEE7 2 x 4 Side Ground (CE Spec) **(SN 0300203771 through 0300220609)**	
	1001100337	Ref	AC Box at Platform - 220V AFSINT 107 Keyed Ground (CE Spec) **(SN 0300203771 through 0300220609)**	
	1001173606	Ref	Airline Installation - 400S (Machines without Arctic Package) **(SN 0300203771 through 0300212083)**	
	1001173607	Ref	Airline Installation - 460SJ (Machines without Arctic Package) **(SN 0300203771 through 0300212083)**	
	1001174347	Ref	Airline Installation - 400S	
	1001174348	Ref	Airline Installation - 460SJ	
	1001209618	Ref	Alarm White Noise Installation **(SN 0300220610 through 0300272360, Except SN 0300272174 through 0300272184)**	
	1001204996	Ref	Arctic Package with SkyPower Installation Kit (400S Only)	
	1001204997	Ref	Arctic Package without SkyPower Installation Kit (400S Only)	
	1001205008	Ref	Arctic Package with SkyPower Installation Kit (460SJ Only)	
	1001205009	Ref	Arctic Package without SkyPower Installation Kit (460SJ Only)	
	2915102	Ref	Bearing Kit	
	1001171499	Ref	Boom and Chassis Bellows Installation (400S Only)	
	1001171500	Ref	Boom and Chassis Bellows Installation (460SJ Only)	
	1001234099	Ref	Boom Kit - Telematics (CE Spec)	
	1001206437	Ref	Boom Wear Pad Kit	
	1001172630	Ref	Boom Wiper Installation	
	1001116420	Ref	Cable Carrier Tray Installation (460SJ Machines Only) (Australian Specs) **(SN 0300203771 through 0300224615, SN E300000100 through E300003918, Except SN 0300272174 through 0300272184, Excluding E300007847)**	
	1001172045	Ref	Cable Carrier Tray Installation (460SJ Machines Only) (Australian Specs) **(SN 0300224616 through 0300272360, SN E300003919 through E300007988)**	
	1001175239	Ref	Cables and Clamps Installation - 4000W Generator 60Hz (400S Only)	
	1001175241	Ref	Cables and Clamps Installation - 4000W Generator 60Hz (460SJ Only)	
	1001173600	Ref	Cables and Clamps Installation - SkyPower (400S Only)	
	1001173602	Ref	Cables and Clamps Installation - SkyPower (460SJ Only) **(SN 0300203771 through 0300212083)**	
	1001173605	Ref	Cables and Clamps Installation - SkyPower (460SJ Only)	
	1001177952	Ref	ClearSky (Telematics) Installation (Factory Installed) (ANSI Specs) Note: Refer to Manual Supplement p/n 3128499 for available replacement parts.	
	1001177953	Ref	ClearSky (Telematics) Installation (Factory Installed) (CSA Specs) Note: Refer to Manual Supplement p/n 3128499 for available replacement parts.	

ITEM	PART NUMBER	QTY	DESCRIPTION	REV
	1001177955	Ref	ClearSky (Telematics) Installation (Factory Installed) (Brazil and New Zealand Specs) Note: Refer to Manual Supplement p/n 3128499 for available replacement parts.	
	1001243183	Ref	ClearSky (Telematics) Added-on-Kit (Dealer Installed) (ANSI, ANSI Export, CSA and CE Specs)	
	1001243184	Ref	ClearSky (Telematics) Added-on-Kit (Dealer Installed) (CE Specs)	
	1001177954	Ref	ClearSky (Telematics) Installation (Factory Installed) (Australian Spec) Note: Refer to Manual Supplement p/n 3128499 for available replacement parts.	
	1001242639	Ref	ClearSky (Telematics)Access Control Installation (Dealer Installed) (ANSI, ANSI Export, CSA and CE Specs)	
	1001227453	Ref	ClearSky Installation (ANSI and CSA Specs) **(SN 0300234470 through 0300272360, Except SN 0300272174 through 0300272184)**	
	1001228955	Ref	ClearSky Installation (ANSI Export and CE Specs) **(SN E300005157 through E300007988, Excluding E300007847)**	
	1001229107	Ref	ClearSky (Telematics) Installation (ANSI and CSA Specs) **(SN 0300234470 through 0300272360, Except SN 0300272174 through 0300272184)**	
	1001233237	Ref	ClearSky Installation (ANSI Export and CE Specs) **(SN E300005157 through E300007988, Excluding E300007847)**	
	1001183207	Ref	Cold Weather Package - Deutz D2011 Engines	
	1001183206	Ref	Cold Weather Package - Deutz D2.9L4 Engines	
	1001183208	Ref	Cold Weather Package - GM Engines	
	1001216914	Ref	Cold Weather Package - Kubota Engines	
	1001177840	Ref	Container/Transport Wheels Installation - 12 x 16.5 Tires	
	1001177841	Ref	Container/Transport Wheels Installation - 14 x 17.5 Tires	
	0272031	Ref	Container/Transport Wheels Installation - 33/16LI x 16.1 Foam Filled Sand Tires	
	1001177524	Ref	Cribbing Switch Installation (ANSI and CSA Specs)	
	1001196610	Ref	Decal - Ahern Rentals	
	1001196717	Ref	Decal - Blueline Rentals	
	1001178431	Ref	Decal - Boels Rentals	
	1001178435	Ref	Decal - ClearSky	
	1001241339	Ref	Decal Kit - Platform (400S)	
	1001241340	Ref	Decal Kit - Platform Console Box	
	1001241341	Ref	Decal Kit - Platform (460SJ)	
	1001178424	Ref	Decal - Head and Enquist Equipment (H & E)	
	1001178420	Ref	Decal - Hertz	
	1001222196	Ref	Decals - Hertz (Canada)	
	1001178428	Ref	Decal - Hewitt The Rental Store (English)	
	1001178429	Ref	Decal - Hewitt The Rental Store (French)	
	1001221879	Ref	Decal - Herc Rentals	
	1703175	Ref	Decal - Lanyard Attach (GM K-1 Spec) **(SN 0300203771 through 0300212083)**	
	1001178426	Ref	Decal - Leavitt	
	1001178421	Ref	Decal - National Equipment Services (NES)	
	1702868	Ref	Decal - No Hands (English Language) (Used with Mesh to Top Rail Platform)	
	1704000	Ref	Decal - No Hands (English and French Dual Language) (Used with Mesh to Top Rail Platform)	
	1001200128	Ref	Decal - Quick Start Guide (CE Spec) (French Decal) (For LOXAM Rentals Only)	
	1001200129	Ref	Decal - Quick Start Guide (CE Spec) (Dutch Decal) (For LOXAM	

ITEM	PART NUMBER	QTY	DESCRIPTION	REV
			Rentals Only)	
	1001200130	Ref	Decal - Quick Start Guide (CE Spec) (German Decal) (For LOXAM Rentals Only)	
	1001200131	Ref	Decal - Quick Start Guide (CE Spec) (Danish Decal) (For LOXAM Rentals Only)	
	1001200132	Ref	Decal - Quick Start Guide (CE Spec) (Swedish Decal) (For LOXAM Rentals Only)	
	1001200133	Ref	Decal - Quick Start Guide (CE Spec) (Spanish Decal) (For LOXAM Rentals Only)	
	1001200134	Ref	Decal - Quick Start Guide (CE Spec) (Norwegian Decal) (For LOXAM Rentals Only)	
	1001181145	Ref	Decal - Quick Start Guide (CE Spec) (English Decal) (For LOXAM Rentals Only)	
	1001218717	Ref	Decal - Riwal Installation	
	1001178425	Ref	Decal - RSC Equipment Rental	
	0272589	Ref	Decal - SkyPower (50Hz)	
	0272435	Ref	Decal - SkyPower (60Hz)	
	1001141300	Ref	Decal - SkyGuard Override	
	1001141302	Ref	Decal - SkyGuard/Soft Touch Override	
	1001178418	Ref	Decal - Sunbelt Rentals (Standard)	
	1001199862	Ref	Decal - Sunbelt Rentals (Aftermarket)	
	1001214691	Ref	Decal - Sunstate Rentals	
	1001235119	Ref	Decal - Thompson Cat Rental	
	1001178430	Ref	Decal - Titan Rentals	
	1001178419	Ref	Decal - United Rentals	
	1001178427	Ref	Decal - Volvo Rents	
	1001213068	Ref	Decal Kit - Console Box	
	1001213066	Ref	Decal Kit - Machine	
	1001213070	Ref	Decal Kit - Platform	
	1001148902	Ref	Electrical Connector Kit - Amp/Tyco Electrical Connectors	
	1001148903	Ref	Electrical Connector Kit - Deutsch DT Electrical Connectors	
	1001148904	Ref	Electrical Connector Kit - Deutsch HD Electrical Connectors	
	1001148905	Ref	Electrical Connector Kit - Packard Electrical Connectors	
	1001148906	Ref	Electrical Connector Kit - Various Electrical Connectors	
	0275055	Ref	Engine Block Heater - GM Engines	
	1001214833	Ref	Engine Block Heater - Kubota Engines	
	1001246867	Ref	Enhanced Detection System (EDS) Level 1 (2 Bar) Installation Kit	
	1001246860	Ref	Enhanced Detection System (EDS) Level 2 (3 Bar) Installation Kit	
	1001236746	Ref	Fall Arrest Bolt Installation Kit - 96in	
	1001236747	Ref	Fall Arrest Bolt Installation Kit - 72in	
	1001238463	Ref	Fall Arrest Bolt Installation Kit - 72in	
	1001172751	Ref	Fan Cover Installation - Deutz D2.9L4 Engines	
	1001204482	Ref	Filter Kit - Combined (Hydraulic Oil/Air & Engine Air/Fuel Oil) (Deutz)	
	1001206434	Ref	Filter Kit - Combined (Hydraulic Oil/Air & Engine Air/Fuel Oil) (GM)	
	1001117294	Ref	Footswitch Shield Installation	
	1001180799	Ref	Generator Installation - 2500W/50Hz (Deutz D2011) **(SN 0300203771 through 0300220609)**	
	1001202944	Ref	Hose Kit - Axle (Front) (Without Arctic Package)	
	1001202945	Ref	Hose Kit - Axle (Front) (With Arctic Package)	
	1001202943	Ref	Hose Kit - Axle (Rear)	
	1001202941	Ref	Hose Kit - Boom (400S)	

ITEM	PART NUMBER	QTY	DESCRIPTION	REV
	1001202942	Ref	Hose Kit - Boom (460SJ)	
	1001202940	Ref	Hose Kit - Boom (Upper)	
	1001214614	Ref	Hose Kit (Front Hydraulic - 2WD)	
	1001206439	Ref	Hose Kit - Power Track (Upper) (400S)	
	1001206440	Ref	Hose Kit - Power Track (Upper) (460SJ)	
	1001202946	Ref	Hose Kit - Turntable	
	1001202947	Ref	Hose Kit - Turntable	
	1001202948	Ref	Hose Kit - Turntable	
	1001204921	Ref	Hostile Environment Kit, 400S	
	1001204922	Ref	Hostile Environment Kit, 460SJ	
	2300014	Ref	Hydraulic Fluid - Mobil #424	
	2300016	Ref	Hydraulic Fluid - Mobil DTE 13	
	2300021	Ref	Hydraulic Fluid - Union Carbide Ucon Hydrolube HP-5046D (Fire Resistant)	
	2300027	Ref	Hydraulic Fluid - Mobil EAL 224H Bio	
	2300029	Ref	Hydraulic Fluid - Mobil EAL Envirosyn H46 Bio	
	2300039	Ref	Hydraulic Fluid - Exxon Univis HVI 26 (Use with Arctic Package)	
	1001174926	Ref	Lights Installation - Chassis Illumination	
	1001174925	Ref	Lights Installation - Headlights and Taillights	
	1001120466	Ref	Lights Installation - Platform Worklights	
		Ref	Load Valve Components (Deutz T4F Engines)	
	1001236223	Ref	Decal - Hydraulic Load Valve	
	1001235760	Ref	Harness, Hydraulic Load Valve	
	1001236224	Ref	Module, Control - Hydraulic Load Valve	
	1001202749	Ref	Lockable Fuel Cap Cover - Black **(SN 0300224616 through 0300272360, SN E300003919 through E300007988, Except SN 0300272174 through 0300272184, Excluding E300007847)**	
	1001191395	Ref	Lockable Fuel Cap Cover - Green (ANSI and ANSI Export Specs) **(SN 0300224616 through 0300272360, Except SN 0300272174 through 0300272184)**	
	1001191394	Ref	Lockable Fuel Cap Cover - Red (ANSI and ANSI Export Specs) **(SN 0300224616 through 0300272360, Except SN 0300272174 through 0300272184)**	
	1001183407	Ref	Low Temperature Cutout Installation (Russian Specs)	
	1001173664	Ref	Oil Cooler Installation - Deutz D2011 Engines	
	1001164493	Ref	Oil Cooler Installation - Deutz D2.9L4 Engines	
	1001173745	Ref	Oil Cooler Installation - GM Engines	
	1001216552	Ref	Oil Cooler Installation - Kubota Engines	
	0257728	Ref	Pipe Racks Installation (All Specs except Australian Spec)	
	0274661	Ref	Pipe Rack Installation (Australian Specs)	
	1580013	Ref	Platform Corner Storage Tray	
	0258703	Ref	Platform Cover Installation - Clear Plastic **(SN 0300203771 through 0300208696)**	
	0271675	Ref	Platform Cover Installation - Rubber **(SN 0300203771 through 0300208696)**	
	1001110974	Ref	Platform Cover Installation - Clear	
	1001195304	Ref	Platform Cover Installation - Steel	
	1001142505	Ref	Platform Entry Kit - Swing Gate (Replaces Drop Bar with Swing Gate)	
	1001142504	Ref	Platform Entry Kit - Drop Bar (Replaces Swing Gate with Drop Bar)	
	1001219794	Ref	Platform Hose and Cable Protection	
	1001138773	Ref	Platform Mesh to Midrail Installation - 36 x 96 Platforms	
	0273149	Ref	Platform Mesh to Toprail Installation - 36 x 72 Platforms	

SECTION 11 - SPECIAL OPTIONS

ITEM	PART NUMBER	QTY	DESCRIPTION	REV
	0273145	Ref	Platform Mesh to Toprail Installation - 36 x 96 Platforms	
	0272733	Ref	Platform Rail Extension Installation - 36 x 72 Platforms	
	0272725	Ref	Platform Rail Extension Installation - 36 x 96 Platforms	
	1001247800	Ref	Quad Tracks Replacement Kit	
	1001194203	Ref	Receptacle Box Installation - 110V IEC Yellow (CE Spec)	
	1001194200	Ref	Receptacle Box Installation - 220V AFSINT 107 (CE Spec)	
	1001194197	Ref	Receptacle Box Installation - 220V CEE7 Post Ground (CE Spec)	
	1001194198	Ref	Receptacle Box Installation - 220V CEE7 Side Ground (CE Spec)	
	1001194204	Ref	Receptacle Box Installation - 220V IEC Blue (CE Spec)	
	1001194365	Ref	Receptacle Box with Cover Installation - 220V (ANSI Export, Australian and China Specs)	
	1001171131	Ref	Receptacle Installation - 240V W/GFCI (4000W Generator) (ANSI, ANSI Export-HRC and CSA Specs)	
	1001159121	Ref	Receptacle Installation - 240V W/GFCI (7500W Generator) (ANSI, ANSI Export-HRC and CSA Specs)	
	1001247073	Ref	SkyEye Retrofit Kit	
	1001205492	Ref	Sky Glazier Installation Kit (ANSI and CSA Specs)	
	1001187508	Ref	SkyGuard Installation, Without Beacon	
	1001203510	Ref	SkyGuard Kit, Without Beacon	
	1001203512	Ref	SkyGuard Kit, With Beacon	
	1001137672	Ref	SkyGuard Platform Sensor Kit	
	1001186431	Ref	Relay	
	1001232643	Ref	SkyLine Kit	
	1001108256	Ref	Soft Touch Installation - Fall Arrest (36 x 72 Platform)	
	1001178951	Ref	Strobe Light Installation - Platform Mounted (Amber)	
	1001177570	Ref	Strobe Light Installation - Platform/Ground Mounted (Amber)	
	1001231235	Ref	Sky Welder Locking Bracket	
	1001210089	Ref	Telematics - Cat	
	1001228363	Ref	Telematics - Herc	
	1001209282	Ref	Telematics - Loxam	
	1001210090	Ref	Telematics - Riwal	
	1001195610	Ref	Telematics - United Rentals (M6)	
	1001214463	Ref	Telematics - United Rentals (M8)	
	2901443	Ref	Tools - Analyzer Kit	
	1001137005	Ref	Tools - Cable Kit, Software	
	7002821	Ref	Tools - Crimper, Wire	
	7002823	Ref	Tools - Pin Extractor - Universal (For Electrical Connectors with Pins and Sockets)	
	4460510	Ref	Tools - Pin Extractor - 12-14 Gauge (For Removal of Pin/Sockets from Deutsch Connectors)	
	4460467	Ref	Tools - Pin Extractor - 16-18 Gauge (For Removal of Pin/Sockets from Deutsch Connectors)	
	7016654	Ref	Tools - Screwdriver, Magnetic	
	7002822	Ref	Tools - Screwdriver, Potentiometer	
	7004275	Ref	Tools - Seal Tool 1 (For Cylinders)	
	7004276	Ref	Tools - Seal Tool 1-1/2 (For Cylinders)	
	7002828	Ref	Tools - Stripper, Wire	
	1001236496	Ref	Wet Stacking Prevention Kit	
	1001209059	Ref	Work Surface Installation **(SN 0300224616 through 0300272360, SN E300003919 through E300007988, Except SN 0300272174 through 0300272184, Excluding E300007847)**	

PART NUMBER INDEX

SECTION 11 - SPECIAL OPTIONS

0080201.....352, 358, 382, 388
0080231.....214, 226, 238
0100009.....583, 587, 591, 595, 599
0100011.....17, 19, 21, 23, 25, 57, 59, 69, 71, 101, 103, 107, 113, 115, 119, 121, 123, 125, 127, 129, 131, 133, 172, 176, 180, 183, 185, 187, 189, 192, 195, 197, 207, 211, 214, 219, 223, 226, 231, 235, 238, 251, 255, 258, 265, 269, 272, 279, 287, 293, 297, 299, 302,306, 311, 317, 321, 323, 326, 330, 337, 343, 347, 349, 352, 358, 367, 373, 377, 379, 382, 388, 419, 421, 423, 427, 431, 435, 439, 443, 447, 451, 455, 459, 463, 467, 471, 485, 489, 493, 497, 499, 501, 503, 505, 513, 515, 517, 519, 521, 523, 525, 547, 549, 551, 561, 563, 565, 567, 569, 571, 573, 575, 617, 619, 621, 625, 633, 635, 637, 655, 665, 667
0100019.....23, 25, 83, 89, 95, 427, 439, 443, 447, 455, 459, 463
0100020.....65, 207, 214, 219, 226, 231, 238, 251, 258, 265, 272, 287, 293, 302, 306, 311, 317, 326, 330, 337, 343, 352, 358, 367, 373, 382, 388, 607, 781, 783, 785, 787, 789, 791, 793, 795
0100035.....103, 105, 107, 109, 599, 647, 649, 651
0100038.....655, 665, 667
0100048.....161, 423, 427, 431, 435, 439, 443, 447, 451, 455, 459, 463, 467, 471, 523, 587, 591, 595, 599
0100071.....627
0100079.....439, 443, 447, 451, 455, 459, 463, 467, 471
0100081.....214, 226, 238, 258, 272, 302, 306, 326, 330, 527, 529, 531, 533, 535, 537, 583, 587, 591, 595, 629
0140011.....583, 587, 591, 595, 599
0140043.....135
0181949.....65
0200048.....617
0257728.....935
0258703.....935
0270022.....777
0270024.....779
0270078.....55
0270091.....43
0270092.....47
0270093.....55
0270653.....49
0271675.....935
0271995.....51
0271998.....53
0272031.....933
0272070.....521
0272254.....635
0272310.....45
0272427.....617
0272435.....934
0272448.....635
0272521.....633
0272588.....633
0272589.....457, 934
0272725.....936
0272733.....936
0273145.....936
0273149.....935
0273380.....461, 465, 469, 473
0274661.....935
0275055.....934
0275216.....781, 851
0275217.....783, 853
0275218.....785, 855
0275219.....789, 859
0275452.....787, 857
0275453.....791, 861
0275454.....793, 863
0360406.....63
0363019.....61, 63
0400075.....113, 115
0440162.....207, 219, 231, 251, 265, 287, 293, 311, 317, 337, 343, 367, 373
0440240.....95
0440271.....19, 21
04600004.....283
04603585.....283
0480122.....423
0480126.....439, 455
0480128.....443, 459
0480129.....472
0480142.....431, 451, 467
0561237.....533, 535
0630462.....617
0630518.....633, 635, 637
0630534.....655, 659
0630535.....665, 667
0630563.....527, 529, 531, 533, 535, 537
0630568.....583, 588, 592, 596, 600
0630613.....172, 176, 180, 192
0641404.....625
0641405.....523, 583, 587, 591, 595, 599, 625
0641406.....577, 579, 581, 615, 883, 885, 887, 889, 891, 893, 895, 897, 899, 901, 903, 905, 907, 909, 911, 913, 915, 917, 919, 921, 923
0641407.....523
0641408.....577, 579, 581
0641409.....647, 649, 651
0641410.....183, 185, 187, 189, 195, 197
0641414.....583, 587, 591, 595, 599, 617, 619, 621, 627
0641416.....523, 781, 783, 785, 787, 789, 791, 793, 795, 813
0641418.....537, 549, 551, 561, 563, 565, 567, 569, 571, 573, 575
0641420.....547
0641504.....61, 208, 219, 231, 252, 265, 287, 293, 312, 318, 337, 343, 367, 373, 527, 531, 537
0641507.....423, 427, 435
0641510.....431
0641605.....527, 529, 531, 533, 535, 537
0641606 69, 71, 633, 635, 637
0641608.....499, 501, 503, 505
0641610.....279, 577, 579, 581
0641611.....665, 667
0641612.....61, 65
0641616.....439, 443, 447, 455, 459, 463
0641710.....431
0641772.....423, 427, 435
0641808.....451, 467
0641812.....211, 223, 235, 255, 269, 297, 299, 321, 323, 347, 349, 377, 379, 521, 525
0641822.....523
0642012.....629
0642024.....523
0642212.....629
0642684.....521, 523, 525
0681608.....521, 523, 525
0681810.....25
0681814.....553
0681822.....553
0682014.....23, 25
0682026.....95
0682040.....63
0700408.....781, 783, 785, 787, 789, 791, 793, 795
0700610.....208, 220, 232
0700612.....119, 127
0700614.....207, 219, 231
0700619.....333, 679, 687, 695, 703, 711, 718, 729, 737, 745, 761
0700620.....135, 533, 535, 537
0700810.....352, 358, 382, 388
0700814.....352, 358, 382, 388
0700815.....352, 358, 382, 388
0700816.....354, 360, 384, 390
0700817.....207, 219, 231, 251, 265, 287, 293, 311, 317, 337, 343, 367, 373
0700818.....207, 219, 443, 447, 451, 455, 459, 463, 467, 471
0700819.....471
0700820.....431, 451, 467
0700821.....207, 219, 231, 251, 265
0701016.....354, 360, 384, 390, 431, 451, 467, 471
0701017.....251, 265
0701018.....103, 105, 107, 109
0701020.....103, 105, 107, 109, 499, 501, 503, 505
0701216.....352, 358, 382, 388
0701217.....17
0701219.....419, 421
0701220.....101
0701222.....489, 493
0701223.....419, 421
0701224.....352, 358, 382, 388, 435, 471
0701617.....21
0701618.....83, 89
0701619.....477, 479, 481, 483
0711214.....258, 272, 352, 382
0711220.....19, 21
0711221.....302, 306, 326, 330, 431, 452, 468
0711224.....214, 226, 238, 258, 272, 423, 427, 435, 439, 443, 447, 455, 459, 463, 471
0711227.....431, 451, 467
0711629.....21
0721006.....279
0731005.....103, 105, 107, 109, 617
0741606.....258, 272
0741607.....439, 443, 447, 463

0741608 471
0760415 519
0760605 ....352, 358, 382, 388
0760606 ....352, 358, 382, 388, 439, 443, 447, 455, 459, 463
0760607 ..... 260, 274
0760608 ....192, 195, 197, 352, 358, 382, 388, 423, 427, 431, 435
0760610 ....113, 115, 119, 121, 123, 125, 127, 129, 131, 133, 135, 183, 185, 187, 189, 208, 214, 219, 226, 231, 238, 252, 258, 265, 272, 287, 293, 303, 307, 311, 317, 326, 330, 337, 343, 352, 358, 367, 373, 382, 388, 413, 415, 417, 439, 443, 447, 451, 455, 459, 463, 467, 471, 797
0760612 ....135, 352, 358, 382, 388
0760613 ..... 251, 265
0760614 ....183, 185, 187, 189, 195, 197, 215, 227, 239, 439, 815, 817
0760615 ....163, 165, 167, 169
0760619 ..... 753, 768
0760808 ....258, 272, 302, 306, 326, 330, 352, 358, 382, 388
0760810 ....172, 176, 192, 260, 274, 333
0760812 ....258, 272, 302, 306, 326, 330, 337, 343, 352, 358, 367, 373, 382, 388, 413, 415, 417, 423, 427, 431, 440, 444, 448, 452, 456, 460, 464, 468, 799
0760814 ....214, 226, 238, 258, 272, 303, 307, 326, 330, 352, 358, 382, 388, 435, 471
0760815 ....214, 226, 238, 260, 274, 302, 306, 326, 330, 352, 358, 382, 388
0760816 .....61, 172, 176, 180, 192, 354, 360, 384, 390
0761009 .....423, 513, 515
0761010 ..... 69, 71
0761011 ..... 19, 21
0761012 23, 25, 113, 115, 172, 176, 180, 183, 185, 187, 189, 192, 333, 415, 485, 497, 499, 501, 503, 505, 513, 515
0761014 .... 105, 109, 119, 121, 123, 125, 127, 129, 131, 133, 172, 176, 180, 192, 195, 197, 199, 258, 272, 337, 343, 352, 358, 367, 373, 382, 388, 423, 427, 431, 525, 527, 529, 531, 533, 535, 537
0761015 .. 61, 69, 71, 103, 107, 207, 214, 219, 226, 231, 238, 251, 258, 265, 272, 287, 293, 302, 306, 311, 317, 326, 330, 337, 343, 352, 358, 367, 373, 382, 388, 427, 435, 499, 501, 503, 505
0761016 ..... 97, 119, 121, 123, 125, 127, 129, 131, 133, 258, 272, 302, 306, 326, 330, 352, 358, 382, 388, 435, 519
0761018 .... 527, 529, 531, 533, 535, 537
0761019 .... 485, 489, 493, 497
0761210 ..... 61, 258, 272
0761212 .... 258, 272, 447, 463
0761214 .... 427, 435, 439, 443, 455, 459, 471
0761215 ..... 101, 435, 471
0761216 .....521, 525
0761217 .... 485, 489, 493, 497
0761218 .... 477, 479, 481, 483
0761615 17
0761620 .....83, 89
0771212 .....252, 266
0771414 .... 214, 226, 238, 258, 272, 423, 427, 439, 443, 447, 455, 459, 463
0771416 .... 439, 443, 455, 459
0772018 .....83, 89
0811608 ..... 23, 431, 451, 467
0840055 845
0860038 .... 443, 447, 451, 459, 463, 467, 471, 777, 779
0860520 .... 883, 885, 887, 889, 891, 893, 895, 897, 899, 901, 903, 905, 907, 909, 911, 913, 915, 917, 919, 921, 923
0861538 .... 459, 463, 467, 471
0861572 455
0861731 .... 795, 857, 861, 863
0861781 .....851, 853
0861880 .....819, 821
0902733 61
0902734 61
0902751 .....583, 591
0902888 .....443, 447, 451, 455, 459, 463, 467, 471
0902919 523
0902920 523
0903484 813
0940049 .....119, 121, 123, 125, 127, 129, 131, 133, 172, 176, 180, 192
0940071 172
0940102 629
0940103 617
0961845 .....547, 549, 551, 561, 563, 565, 567, 569, 571, 573, 575
0961893 .....655, 659
0961896 665
0961897 .....647, 649, 651
0961947 .....499, 501, 503, 505
0961948 .....19, 21
0961950 .....17, 485, 489, 493, 497, 647, 649, 651, 653
0961951 .....214, 226, 238, 258, 272, 302, 306, 326, 330, 352, 358, 382, 388, 485, 497
0962051 .....419, 421
0962270 553
0962292 21
0962335 .....499, 501, 503, 505
0962336 .....655, 657, 659
0962348 .....21, 489, 493
0962450 523
0962520 .....439, 443, 447, 451, 455, 459, 463, 467, 471
1001001939 .....354, 360
1001091102 65, 797, 813, 815, 817
1001091794 .....302, 306, 326, 330
1001091892 .....302, 306, 327, 331
1001091969 781
1001091970 783
1001091971 785
1001091972 789
1001091973 787
1001091974 791
1001091975 793
1001093382 .....113, 115
1001095704 868
1001096070 439
1001097000 .....220, 266, 311
1001097051 877
1001097150 .....819, 821
1001098122 .....607, 847, 849
1001098828 525
1001098928 .....678, 686, 694, 702, 710, 728, 736, 744, 752, 760
1001099366 629
1001099367 629
1001099560 .....485, 489, 493, 497
1001100326 932
1001100327 932
1001100331 932
1001100333 932
1001100337 932
1001100341 851
1001100342 853
1001100345 857
1001100346 863
1001100347 861
1001101191 .....781, 783, 785, 787, 789, 791, 793
1001101196 .....781, 783, 785, 787, 789, 791, 793
1001102987 .....69, 71
1001103012 867
1001104029 .....443, 447, 451, 456, 460, 464, 468, 472
1001104498 867
1001106736 135
1001107854 867
1001108256 936
1001109475 821
1001109482 821
1001109864 .....813, 819
1001110434 .....583, 587, 591, 595, 599
1001110873 .....443, 447, 451, 460, 464, 468, 472, 777
1001110974 935
1001111424 .....113, 115, 214, 226, 238, 259, 273
1001112551 891
1001112612 .....801, 868
1001112796 801
1001113047 192
1001113483 523
1001113961 868
1001115931 .....327, 331
1001116420 932
1001116693 .....847, 849
1001116710 833
1001116720 .....843, 865
1001116727 825
1001116728 .....825, 868
1001116732 837
1001116734 837
1001116747 868
1001116748 867
1001116763 867
1001116774 801
1001116808 801
1001116816 868
1001116952 825
1001116983 833
1001117057 837
1001117064 867
1001117106 825

SECTION 11 - SPECIAL OPTIONS

1001117107 .....825, 868
1001117140 192
1001117172 607
1001117174 .....583, 587, 591, 595, 599, 607
1001117294 934
1001117308 .....259, 273
1001117372 643
1001118274 .....333, 354, 360
1001118378 867
1001118384 873
1001118388 .....843, 873
1001118878 .....259, 273
1001118971 519
1001118972 ....23, 25, 57, 59, 103, 105, 107, 109, 119, 121, 123, 125, 127, 129, 131, 133, 333, 338, 344, 368, 374
1001119020 .....801, 847, 867
1001119032 867
1001119278 .....220, 266, 311, 317, 367, 373
1001119619 875
1001119620 .....877, 879
1001119661 925
1001120328 .....135, 619, 621, 625
1001120371 .....523, 845
1001120466 935
1001125137 .....647, 649, 651
1001125387 .....252, 266
1001125677 849
1001126009 873
1001126351 825
1001126352 825
1001126356 825
1001126357 825
1001126362 825
1001126363 825
1001126365 825
1001126384 825
1001126391 825
1001128527 637
1001128556 637
1001129285 868
1001129858 .....444, 451
1001130220 .....517, 519
1001131269 .....883, 885, 887, 889, 905, 907, 909, 911
1001132195 .....214, 226, 238
1001132196 .....214, 226, 238
1001133714 826
1001133715 826
1001133956 825
1001133957 825
1001134488 .....259, 273
1001134543 .....83, 89
1001135196 .....207, 220, 231, 251, 266, 287, 293, 311, 317, 337, 343, 367, 373
1001135651 826
1001135679 .....427, 447, 464
1001136079 .....214, 238, 259
1001136172 273
1001136834 .....259, 273
1001136988 464
1001137005 936
1001137032 .....485, 489, 493, 497
1001137336 .....354, 360, 384, 390
1001137672 936
1001137673 .....619, 621, 929
1001138173 .....214, 226, 238, 259, 273, 303, 307, 327, 331, 353, 359, 383, 389
1001138175 .....215, 226, 239, 259, 273, 303, 307, 327, 331, 353, 359, 383, 389
1001138228 .....259, 273, 929
1001138248 .....215, 227, 239, 259, 273, 303, 307, 327, 331, 354, 360, 384, 390
1001138494 .....547, 549, 551, 561, 563, 565, 567, 569, 571, 573
1001138514 .....547, 549, 551, 561, 563, 565, 569, 573
1001138565 439
1001138566 .....440, 444, 447, 452
1001138773 935
1001138795 659
1001138827 .....259, 273
1001139240 .....259, 273
1001139357 .....440, 444
1001139384 .....183, 185, 187, 189, 195, 197
1001139586 21
1001139819 .....215, 226, 239
1001140312 274
1001140346 448
1001140429 .....547, 549, 551, 561, 563, 565, 567, 569, 571, 573, 575
1001140535 .....259, 273
1001140564 .....259, 273
1001141181 .....432, 452, 468
1001141300 934
1001141302 934
1001141304 .....259, 273
1001141694 .....215, 226, 239, 259, 273
1001141870 279
1001141967 .....855, 859
1001141968 855
1001141969 859
1001141970 859
1001141971 855
1001141995 .....215, 227, 239, 259, 273, 303, 307, 327, 331, 353, 359, 383, 389
1001142501 .....252, 266, 279
1001142504 935
1001142505 935
1001142643 .....448, 464
1001142646 .....448, 464
1001142683 .....163, 165, 167, 169, 929
1001142736 .....163, 165, 167, 169, 801
1001142938 826
1001142940 826
1001143390 .....215, 227, 239, 259, 273
1001143797 .....259, 273
1001143852 925
1001144116 .....259, 273
1001144433 .....592, 595, 621
1001144629 .....541, 543, 545, 555, 557, 559, 567, 571
1001145781 .....555, 557, 559, 561, 563, 565
1001146220 .....137, 139, 141, 143, 145, 147, 149, 151, 583, 587, 591, 595, 599
1001146397 .....51, 53
1001147233 .....435, 472
1001147264 825
1001147274 ....43, 45, 47, 49
1001147812 .....303, 307, 327, 331, 353, 359, 383, 389
1001147813 .....303, 307, 327, 331, 354, 360, 384, 390, 928
1001148138 .....428, 435
1001148641 .....208, 220, 232, 424, 427, 432, 440, 444, 448, 452, 456, 460, 465, 468
1001148863 43
1001148864 43
1001148865 47
1001148866 47
1001148869 49
1001148870 49
1001148871 45
1001148872 45
1001148873 51
1001148874 51
1001148875 53
1001148876 53
1001148902 934
1001148903 934
1001148904 934
1001148905 934
1001148906 934
1001148972 .....477, 481
1001149160 .....172, 176, 180, 192, 353, 359, 383, 389
1001149639 .....353, 359, 383, 389
1001149953 ..... 47, 49, 53
1001150324 17, 119, 121, 123, 125, 127, 129, 131, 133
1001150326 17
1001150918 .....220, 266, 318, 367, 373
1001150998 .....215, 227, 239
1001151393 .....153, 155, 157, 159
1001152456 .....444, 448, 452
1001152457 .....444, 448, 452
1001152485 797
1001152489 .....259, 273
1001152525 .....444, 448, 452, 457, 461, 465, 469, 473
1001152530 .....444, 448, 452
1001152532 .....440, 444, 448, 452, 839
1001153260 .....444, 448, 452
1001154405 .....251, 266, 279
1001154726 837
1001155041 .....427, 435, 464, 472
1001155043 .....137, 139, 141, 143, 145, 147, 149, 151
1001155044 .....137, 139, 141, 143, 145, 147, 149, 151, 288, 294, 312, 318, 337, 343, 367, 373, 583, 587, 591, 595, 599, 609, 611
1001155045 .....137, 139, 141, 143, 145, 147, 149, 151, 583, 587, 591, 595, 599, 928
1001155823 .....251, 266
1001156107 .....208, 220, 231, 288, 294, 311, 317, 337, 367
1001156819 .....303, 307, 327, 331, 337, 343, 368, 374
1001156823 333
1001157196 .....583, 587, 591, 595, 599, 929
1001157520 .....457, 461, 465, 469, 473
1001157521 .....457, 461, 465, 469, 473
1001157525 456

1001157528 ..... 457, 461, 465, 469, 473
1001157592 ..... 460, 464, 465, 468, 472
1001158007 ..... 457, 461, 465, 469, 473
1001158008 ..... 444, 448, 452, 457, 461, 465, 469, 473
1001158363 ..... 444, 448, 452
1001159018 312
1001159121 936
1001159162 135
1001159256 ..... 583, 587, 591, 595, 599, 928
1001159323 ..... 192, 893, 895
1001161709 ..... 583, 587, 591, 595, 599, 928
1001161710 ..... 287, 293, 311, 317, 337, 343, 367, 373, 609, 611, 929
1001162335 ..... 252, 266, 279
1001162531 ..... 69, 73
1001162532 ..... 71, 77
1001162537 ..... 25, 41
1001162538 .....69, 71, 81
1001162995 17
1001163178 ...19, 21, 663
1001163179 ..... 19, 21
1001163383 ..... 485, 489, 493, 665
1001163384 ..... 477, 481, 647
1001163385 ..... 477, 479, 481, 483, 661
1001163386 ..... 485, 489, 493, 497, 645
1001163405 ..... 19, 21
1001163418 ..... 103, 105
1001163458 ..... 477, 485
1001163459 ..... 485, 497
1001163470 ..... 485, 497
1001163482 ..... 481, 489
1001163483 ..... 489, 493
1001163492 ..... 489, 493
1001163580 ..... 17, 643
1001163671 ..... 107, 109
1001163715 ..... 19, 21
1001163716 ..... 19, 21
1001163717 21
1001163722 21
1001163724 21
1001163726 21
1001163939 103
1001163959 ..... 23, 25
1001164092 19
1001164094 17
1001164095 21
1001164202 419
1001164209 ..... 19, 21
1001164302 665
1001164311 665
1001164313 ..... 665, 667
1001164353 .....583, 587, 591, 595, 847
1001164493 935
1001164552 17
1001164555 665
1001164578 .....647, 649
1001164582 .....647, 649, 651
1001164583 .....647, 649, 651
1001164585 .....647, 649, 651
1001164596 647
1001164709 .....477, 481, 483, 653
1001164817 643
1001164818 .....119, 121, 123, 125, 127, 129, 131, 133, 867
1001164942 .....83, 86
1001165035 .....207, 220, 251, 266, 303, 307, 327, 331
1001165060 .....172, 176, 180
1001165131 .....647, 649
1001165282 665
1001165354 774
1001165363 .....665, 667, 669
1001165388 .....215, 227, 239, 259, 273
1001165389 .....215, 227, 239
1001165405 .....259, 273
1001165406 .....259, 273
1001165531 513
1001165534 513
1001165537 .....513, 515
1001165538 513
1001165540 .....517, 519
1001165567 .....499, 501, 503, 505
1001165721 .....259, 274
1001165722 .....259, 274
1001165737 665
1001165849 .....259, 274, 303, 327
1001166000 .....255, 258
1001166001 .....251, 255
1001166002 251
1001166003 265
1001166020 .....211, 214
1001166021 .....207, 211
1001166022 207
1001166023 219
1001166024 311
1001166031 .....103, 107
1001166202 .....287, 297
1001166203 .....297, 302
1001166224 925
1001166319 107
1001166478 61
1001166538 .....583, 587, 591, 595, 599, 603, 928
1001166539 .....584, 587, 591, 595, 599, 605, 928
1001166563 17
1001166710 ..... 103, 105, 107, 109
1001166717 ..... 215, 227, 239
1001166718 ..... 215, 227, 239, 259, 274, 353, 359, 383, 389
1001166894 ..... 419, 421
1001166921 ..... 259, 274
1001166922 ..... 259, 274
1001166924 ..... 259, 274
1001166963 ..... 119, 121, 123, 125, 127, 129, 131, 133, 871
1001166964 ..... 119, 121, 123, 125, 127, 129, 131, 133, 841
1001166970 ..... 251, 266
1001166997 ..... 665, 669
1001167036 ..... 211, 223, 235, 255, 269, 297, 299, 321, 323, 347, 349, 377, 379, 401
1001167038 ..... 208, 220, 231
1001167039 ..... 287, 293, 311, 317
1001167108 ..... 260, 274, 825
1001167111 ..... 215, 227, 239, 823
1001167112 ..... 333, 829
1001167159 ..... 172, 176, 180
1001167164 ..... 413, 415, 417
1001167193 ..... 303, 307, 327, 331
1001167312 815
1001167382 ..... 303, 307, 327, 331
1001167383 ..... 303, 307, 327, 331
1001167384 ..... 303, 307, 327, 331
1001167512 ..... 208, 220, 231, 251, 266, 287, 293, 312, 317, 337, 343, 367, 373
1001167520 ..... 215, 227, 239, 260, 274
1001167565 525
1001167567 525
1001167596 525
1001167605 ..... 489, 499
1001167895 ..... 303, 307, 327, 331
1001167916 69
1001167917 71
1001167918 192
1001167962 609
1001167963 609
1001168010 127
1001168018 ..... 215, 227, 239, 260, 274, 353, 359, 383, 389, 424, 427, 432, 435, 440, 444, 448, 452, 456, 460, 464, 468, 472
1001168026 .....260, 274
1001168059 .....215, 227, 239
1001168099 .....260, 274
1001168166 .....260, 274, 303, 307, 327, 331, 353, 359, 383, 389
1001168173 .....172, 176, 180
1001168207 .....427, 448, 464
1001168209 .....645, 665, 667, 669
1001168210 645
1001168278 .....485, 507
1001168402 525
1001168722 101
1001168762 .....103, 105, 107, 109
1001168841 .....485, 497
1001168842 .....485, 489, 493, 497
1001168843 .....477, 479, 481, 483
1001168844 .....477, 479, 481, 483
1001168845 .....477, 479, 481, 483
1001168846 489
1001168847 .....489, 493
1001168848 .....485, 497
1001168849 .....485, 489, 493, 497
1001168854 .....477, 479, 481, 483
1001168855 101
1001168950 .....260, 274
1001168992 95
1001169046 .....172, 176, 180, 192
1001169054 .....260, 274, 303, 307, 327, 331, 353, 359, 383, 389
1001169060 25
1001169086 57
1001169138 .....260, 274, 303, 307, 327, 331, 353, 359, 383, 389
1001169163 .....145, 149
1001169164 .....127, 145
1001169185 101
1001169191 97
1001169192 97
1001169193 97
1001169284 .....485, 489, 493, 497
1001169285 .....485, 489, 493, 497
1001169286 .....485, 489, 493, 497
1001169287 .....485, 489, 493, 497
1001169288 .....485, 489, 493, 497

SECTION 11 - SPECIAL OPTIONS

1001169289 .....485, 489, 493, 497
1001169380 .....485, 489, 493, 497
1001169386 83
1001169496 99
1001169582 99
1001169611 .....513, 515
1001169668 477
1001169669 481
1001169761 65
1001169775 287
1001169823 .....208, 220, 231, 252, 266, 287, 293, 312, 317
1001169955 .....57, 59
1001169967 .....260, 274, 303, 307, 327, 331, 353, 359, 383, 389
1001169973 57
1001169974 .....303, 327
1001170035 .....260, 274, 303, 307, 327, 331, 353, 359, 383, 389
1001170083 613
1001170084 613
1001170094 .....135, 929
1001170145 113
1001170224 409
1001170225 407
1001170475 189
1001170551 .....172, 176, 183
1001170552 .....172, 176, 187
1001170557 153
1001170558 157
1001170564 519
1001170565 519
1001170617 .....260, 274, 281
1001170642 519
1001170650 413
1001170651 413
1001170662 413
1001170663 .....413, 417
1001170664 .....413, 415, 417
1001170693 .....215, 227, 245
1001170719 .....287, 293, 312, 317
1001170736 61
1001170759 .....647, 649, 651
1001170838 .....137, 139, 141, 143, 145, 147, 149, 151, 584, 587, 591, 596, 599
1001170847 .....517, 519
1001170850 .....172, 176, 180
1001170981 .....303, 307, 327, 331
1001171067 .....485, 489, 493, 497
1001171112 .....485, 490, 493, 497
1001171131 936
1001171324 .....485, 490, 493, 497
1001171335 .....883, 885, 926
1001171336 .....883, 885
1001171337 .....887, 889, 923, 926
1001171339 .....891, 895
1001171341 .....913, 926
1001171342 913
1001171343 .....915, 926
1001171345 .....917, 926
1001171346 917
1001171347 .....919, 926
1001171349 .....921, 926
1001171350 921
1001171351 .....905, 907, 926
1001171352 .....905, 907
1001171353 .....909, 911, 926
1001171355 .....901, 926
1001171356 901
1001171357 .....903, 926
1001171359 .....897, 926
1001171360 897
1001171361 .....899, 926
1001171366 883
1001171367 887
1001171368 895
1001171369 893
1001171370 913
1001171371 915
1001171372 917
1001171373 919
1001171374 921
1001171375 923
1001171376 905
1001171377 909
1001171378 901
1001171379 903
1001171380 897
1001171381 899
1001171382 891
1001171482 .....137, 139, 141, 143, 145, 147, 149, 151
1001171499 932
1001171500 932
1001171545 .....883, 885, 887, 889, 891, 893, 895, 897, 899, 901, 903, 905, 907, 909, 911, 913, 915, 917, 919, 921, 923, 925
1001171667 .....486, 490, 493, 497
1001171953 .....211, 223, 235, 255, 269, 297, 299, 321, 323, 347, 349, 377, 379
1001171954 .....211, 223, 235, 255, 269, 297, 299, 321, 323, 347, 349, 377, 379
1001171966 .....486, 490, 493, 497
1001171967 .....486, 490, 493, 497
1001172003 .....287, 293, 312, 317
1001172045 932
1001172128 .....527, 529, 531, 533, 535, 537
1001172195 .....208, 220, 231
1001172564 630
1001172565 630
1001172566 630
1001172567 630
1001172568 630
1001172569 630
1001172570 629
1001172571 629
1001172572 629
1001172573 629
1001172574 629
1001172575 629
1001172576 629
1001172577 629
1001172578 629
1001172594 .....252, 266
1001172595 405
1001172613 172
1001172614 172
1001172615 .....172, 176, 192
1001172617 .....172, 176, 192
1001172620 629
1001172630 932
1001172653 157
1001172692 .....678, 686, 694, 702, 710, 718, 728, 736, 744, 752, 760, 768
1001172694 .....678, 686, 694, 702, 710, 718
1001172695 .....678, 686, 694, 702, 710, 718, 728, 736, 744, 752, 760, 768
1001172696 .....678, 687, 694, 702, 710, 718
1001172697 .....678, 687, 694, 702, 710, 718, 728, 737, 744, 752, 760, 768
1001172698 .....694, 710, 719, 744, 760, 768
1001172699 .....695, 710, 719, 744, 760, 768
1001172703 .....695, 703, 711, 719, 745, 752, 761, 769
1001172707 .....695, 711, 719, 745, 761, 769
1001172713 .....678, 687, 695, 703, 711, 719, 728, 737, 745, 752, 761, 769
1001172715 .....678, 695, 703, 711, 728, 745, 753, 761
1001172716 .....678, 687, 695, 703, 711, 719, 728, 737, 745, 753, 761, 769
1001172717 .....678, 687, 695, 703, 711, 719, 728, 737, 745, 753, 761, 769
1001172718 .....679, 687, 695, 703, 711, 719, 728, 737, 745, 753, 761, 769
1001172719 .....679, 687, 695, 703, 711, 719, 729, 737, 745, 753, 761, 769
1001172720 .....679, 695, 703, 711, 729, 745, 753, 761
1001172721 .....679, 687, 695, 703, 711, 719, 729, 737, 745, 753, 761, 769
1001172722 .....679, 687, 695, 703, 711, 719, 729, 737, 745, 753, 761, 769
1001172723 .....679, 687, 695, 703, 711, 719, 729, 737, 745, 753, 761, 769
1001172750 405
1001172751 934
1001172756 135
1001172757 .....119, 121, 123, 125, 127, 129, 131, 133, 135
1001172760 .....583, 588, 591, 596, 599
1001172791 .....287, 293, 312, 317
1001172816 161
1001173135 .....694, 710, 772
1001173136 .....744, 760, 772
1001173233 517
1001173262 .....883, 885, 887, 889, 897, 899, 901, 903, 905, 907, 909, 911, 913, 915, 917, 919, 921, 923
1001173289 .....577, 583
1001173290 577
1001173342 .....252, 266, 833
1001173354 .....172, 176, 180, 192
1001173356 172
1001173456 .....527, 529, 531, 533, 535, 537

1001173529 ..... 137, 139, 145, 147
1001173535 ..... 353, 359, 383, 389
1001173594 ..... 527, 531
1001173595 529
1001173596 533
1001173599 537
1001173600 932
1001173602 932
1001173605 932
1001173606 932
1001173607 932
1001173643 153
1001173644 ..... 137, 143
1001173645 ..... 119, 137
1001173646 119
1001173654 535
1001173664 935
1001173665 ..... 527, 529, 531, 533, 535, 537
1001173703 926
1001173745 935
1001173761 ..... 527, 529, 531, 533, 535, 537
1001173763 ..... 513, 515
1001173807 ..... 527, 529, 531, 809
1001173808 ..... 527, 529, 531, 533, 535, 537, 811
1001173810 459
1001173811 455
1001173812 467
1001173898 ..... 679, 687, 695, 703, 711, 719, 729, 737, 745, 753, 761, 769
1001173899 ..... 679, 687, 695, 703, 711, 719, 729, 737, 745, 753, 761, 769
1001173900 ..... 695, 703, 711, 719, 729, 737, 745, 753, 761, 769
1001173901 ..... 695, 703, 711, 719, 729, 737, 745, 753, 761, 769
1001173902 ..... 695, 703, 711, 719, 729, 737, 745, 753, 761, 769
1001173903 ..... 695, 703, 711, 719, 729, 737, 745, 753, 761, 769
1001173904 ..... 695, 703, 711, 719, 729, 737, 745, 753, 761, 769
1001173905 ..... 729, 737, 745, 753, 761, 769
1001173906 ..... 729, 737, 745, 753, 761, 769
1001173907 ..... 695, 703, 711, 719, 729, 737, 745, 753, 761, 769
1001173908 ..... 695, 703, 711, 719, 729, 737, 745, 753, 761, 769
1001173909 ..... 679, 687, 695, 703, 711, 719, 729, 737, 745, 753, 761, 769
1001173925 ..... 440, 444, 456, 460
1001173927 ..... 527, 529, 531, 533, 535, 537
1001173937 ..... 679, 687, 695, 703, 711, 719, 729, 737, 745, 753, 761, 769
1001173938 ..... 679, 695, 703, 711, 729, 745, 753, 761
1001173983 443
1001173984 439
1001174098 ..... 172, 176, 180, 192
1001174158 ..... 440, 813, 815
1001174313 ..... 883, 887, 897, 899, 901, 903, 905, 909, 913, 915, 917, 919, 921, 923
1001174347 932
1001174348 932
1001174349 925
1001174350 925
1001174367 463
1001174486 ..... 288, 294, 312, 318, 337, 343, 367, 373
1001174675 ..... 456, 460, 464, 468, 472, 774
1001174777 ..... 269, 272
1001174778 ..... 266, 269
1001174780 ..... 321, 326
1001174781 ..... 312, 321
1001174783 ..... 223, 226
1001174784 ..... 220, 223
1001174925 935
1001174926 935
1001175021 ..... 287, 293, 312, 318
1001175022 ..... 287, 293, 312, 318
1001175024 ..... 694, 703, 710, 719, 744, 753, 760, 769
1001175068 ..... 407, 409
1001175070 407
1001175071 409
1001175073 ..... 419, 421
1001175074 ..... 419, 421
1001175075 419
1001175239 932
1001175241 932
1001175244 525
1001175348 451
1001175542 447
1001175631 ..... 444, 448, 452, 774
1001175632 774
1001175633 774
1001175634 774
1001176330 ..... 353, 359, 383, 389
1001176469 ..... 155, 159
1001176636 ..... 533, 535, 537
1001176848 ..... 19, 21
1001176899 ..... 513, 515
1001176952 ..... 527, 529, 531, 805
1001176953 ..... 533, 535, 537, 807
1001176963 813
1001177359 ..... 260, 274
1001177451 925
1001177524 933
1001177570 936
1001177840 933
1001177841 933
1001177952 932
1001177953 932
1001177954 933
1001177955 933
1001178228 185
1001178276 772
1001178415 925
1001178418 934
1001178419 934
1001178420 933
1001178421 933
1001178424 933
1001178425 934
1001178426 933
1001178427 934
1001178428 933
1001178429 933
1001178430 934
1001178431 933
1001178433 925
1001178435 933
1001178498 ..... 702, 772
1001178499 ..... 752, 772
1001178788 ..... 259, 273
1001178859 ..... 215, 227, 239
1001178876 ..... 260, 274
1001178951 936
1001179154 ..... 444, 448, 452, 460, 465, 468, 472
1001179836 ..... 427, 435
1001179837 ..... 427, 435
1001179893 ..... 428, 436
1001179903 ..... 215, 227, 260, 274
1001180001 ..... 427, 435
1001180608 ..... 517, 519
1001180620 ..... 260, 274, 303, 307, 327, 331, 353, 359, 383, 389
1001180797 427
1001180798 423
1001180799 934
1001180800 431
1001181045 ..... 821, 928
1001181046 819
1001181051 ..... 499, 501, 503, 505, 511
1001181073 ..... 679, 695, 703, 711, 729, 745, 753, 761
1001181074 ..... 679, 687, 695, 703, 711, 719, 729, 737, 745, 753, 761, 769
1001181075 ..... 679, 687, 695, 703, 711, 719, 729, 737, 745, 753, 761, 769
1001181076 ..... 729, 737, 745, 753, 761, 769
1001181077 ..... 729, 737, 745, 753, 761, 769
1001181145 934
1001181243 ..... 428, 436
1001181325 135
1001181329 ..... 527, 529, 531, 533, 535, 537
1001181366 ..... 288, 294, 312, 318
1001181405 161
1001181430 ..... 303, 327
1001181895 274
1001181913 61
1001182138 627
1001182155 61
1001182245 59
1001182250 59
1001182296 ..... 424, 428, 432, 436
1001182515 159
1001182516 155
1001182563 155
1001182564 159
1001182570 ..... 517, 519
1001182997 ..... 260, 274
1001183206 933
1001183207 933
1001183208 933
1001183216 ..... 703, 753
1001183217 ..... 703, 753
1001183218 ..... 703, 753
1001183407 935
1001183477 ..... 424, 428, 432
1001184324 583
1001184542 ..... 679, 687, 695, 703, 711, 719, 729, 737, 745, 753, 761, 769
1001184543 ..... 679, 687, 695, 703, 711, 719, 729, 737, 745, 753, 761, 769
1001184561 ..... 679, 687, 695, 703, 711, 719, 729, 737, 745, 753, 761, 769
1001184562 ..... 679, 687, 695, 703, 711, 719, 729, 737, 745, 753, 761, 769
1001184563 ..... 679, 687, 695, 703, 711, 719,

729, 737, 745, 753, 761, 769
1001184618 613
1001184619 611
1001184620 611
1001184621 611
1001184626 ..... 583, 588, 591, 596, 599
1001184637 424
1001184644 424
1001184645 424
1001185237 893
1001185281 ..... 591, 596, 599
1001185821 ..... 113, 115, 117
1001185964 868
1001186333 553
1001186377 547
1001186379 549
1001186382 551
1001186383 545
1001186384 543
1001186386 541
1001186431 ..... 621, 865, 936
1001186432 ..... 843, 865, 873
1001186517 ..... 619, 621
1001187382 525
1001187383 525
1001187508 ..... 619, 936
1001187522 ..... 424, 428, 432, 436, 837
1001187674 623
1001187681 875
1001188197 ..... 107, 109
1001188305 557
1001188306 565
1001188308 559
1001188309 561
1001188314 563
1001188315 555
1001188334 101
1001188622 525
1001188731 ..... 424, 428, 432, 436, 774
1001188732 774
1001188844 525
1001188889 619
1001188972 ..... 265, 311, 317, 367, 373
1001189001 525
1001189002 525
1001189882 ..... 893, 895
1001190368 ..... 19, 21
1001190775 ..... 302, 306, 354, 360, 383, 389
1001190804 65
1001190918 333
1001190919 333
1001190920 ..... 287, 293, 312, 318, 333
1001190964 83
1001190985 525
1001191275 ..... 679, 687, 695, 703, 711, 719, 729, 737, 745, 753, 761, 769
1001191276 ..... 679, 687, 695, 703, 711, 719, 729, 737, 745, 753, 761, 769
1001191394 935
1001191395 935
1001191620 ..... 260, 274
1001191708 627
1001192292 ..... 592, 596, 865
1001192401 867
1001193018 ..... 781, 783, 785, 787, 789, 791, 793, 795
1001193133 630
1001193134 630
1001193135 629
1001193136 629
1001193336 ..... 103, 105
1001193654 ..... 687, 719, 737, 769
1001193730 592
1001193731 579
1001193732 ..... 579, 591
1001194197 936
1001194198 936
1001194200 936
1001194203 936
1001194204 936
1001194365 ..... 795, 936
1001195039 ..... 338, 344, 368, 374
1001195206 665
1001195304 935
1001195610 936
1001195699 ..... 303, 307, 327, 331
1001195700 ..... 303, 307, 327, 331
1001195714 ..... 303, 307, 327, 331
1001195745 925
1001195746 925
1001195947 609
1001196382 ..... 440, 444, 448, 456, 460
1001196458 803
1001196589 867
1001196590 867
1001196610 933
1001196634 ..... 277, 928
1001196637 ..... 119, 121, 123, 125, 127, 129, 131, 133
1001196717 933
1001197017 617
1001197036 523
1001197272 ..... 678, 686, 694, 702, 710, 719, 728, 736, 744, 752, 760, 769
1001197284 ..... 678, 687, 695, 703, 711, 719, 728, 737, 744, 752, 760, 769
1001197424 163
1001197998 774
1001198885 ..... 477, 481, 649
1001198886 ..... 649, 651
1001199035 629
1001199036 630
1001199177 111
1001199207 ..... 172, 176, 180, 192
1001199862 934
1001199901 ..... 172, 176, 180, 192
1001200128 933
1001200129 933
1001200130 934
1001200131 934
1001200132 934
1001200133 934
1001200134 934
1001200458 ..... 183, 187
1001200491 525
1001200494 525
1001200575 ..... 583, 592
1001200910 ..... 163, 165
1001201351 525
1001201633 187
1001201634 187
1001201635 183
1001201636 183
1001201891 ..... 588, 596
1001202298 176
1001202557 ..... 579, 595
1001202591 ..... 577, 587
1001202749 935
1001202830 185
1001202831 189
1001202910 ..... 686, 718, 736, 768
1001202940 935
1001202941 934
1001202942 935
1001202943 934
1001202944 934
1001202945 934
1001202946 935
1001202947 935
1001202948 935
1001203434 ..... 527, 531
1001203435 537
1001203459 537
1001203510 936
1001203512 936
1001203628 649
1001204482 934
1001204510 ..... 891, 893, 895
1001204715 ..... 517, 519
1001204725 525
1001204921 935
1001204922 935
1001204996 932
1001204997 932
1001205008 932
1001205009 932
1001205492 936
1001205958 ..... 787, 791, 793
1001206314 ..... 172, 176, 180, 192
1001206321 ..... 477, 481, 483, 651
1001206402 192
1001206403 192
1001206404 ..... 192, 195
1001206405 195
1001206418 ..... 192, 197
1001206419 197
1001206434 934
1001206437 932
1001206439 935
1001206440 935
1001206442 651
1001206476 799
1001206625 ..... 477, 481, 483, 653
1001206917 ..... 105, 109, 111
1001207004 ..... 167, 169
1001207316 167
1001207331 ..... 687, 719, 737, 769
1001207332 ..... 687, 719, 737, 769
1001207333 ..... 687, 719, 737, 769
1001207340 ..... 718, 772
1001207341 ..... 768, 772
1001207349 105
1001207350 109
1001207726 197
1001208874 ..... 69, 71
1001209059 936
1001209282 936
1001209432 799
1001209474 799
1001209618 932
1001209664 ..... 619, 621
1001209677 797
1001209832 797
1001209844 ..... 353, 359, 363, 383, 389
1001210089 936
1001210090 936
1001210421 ..... 347, 352
1001210763 ..... 353, 383
1001210765 ..... 337, 347
1001211633 192
1001211636 192
1001211794 ..... 353, 359, 383, 389
1001211797 ..... 353, 359, 383, 389
1001211877 413
1001211878 413
1001212223 ..... 464, 472
1001212257 ..... 337, 343, 367, 373
1001212819 192
1001212822 192
1001212989 ..... 353, 359, 383, 389

1001212993 ..... 353, 359, 383, 389
1001213029 ..... 436, 472
1001213062 ..... 337, 343, 367, 373
1001213066 934
1001213068 934
1001213070 934
1001213305 ..... 353, 359, 383, 389
1001213357 ..... 353, 383
1001213423 ..... 353, 383
1001213425 ..... 353, 359, 383, 389
1001213426 ..... 353, 359, 383, 389
1001213447 ..... 847, 849
1001213482 ..... 353, 359, 383, 389
1001213599 ..... 337, 343, 368, 373, 831
1001213824 ..... 353, 359, 383, 389
1001213882 ..... 587, 595, 600
1001214029 926
1001214138 ..... 353, 359, 383, 389
1001214162 23
1001214165 ..... 678, 772
1001214166 ..... 728, 772
1001214174 ..... 23, 33
1001214205 ..... 353, 359, 383, 389
1001214207 ..... 211, 223, 235, 255, 269, 299, 323, 347, 349, 377, 379
1001214233 ..... 353, 359, 383, 389
1001214234 ..... 353, 359, 383, 389
1001214269 ..... 384, 389
1001214276 ..... 353, 359, 384, 389
1001214277 ..... 353, 359, 384, 389
1001214278 ..... 353, 359, 384, 389
1001214307 ..... 354, 359, 384, 389
1001214317 ..... 23, 39
1001214355 411
1001214463 936
1001214502 ..... 337, 343, 368, 374
1001214508 ..... 354, 359, 384, 389
1001214546 ..... 436, 472
1001214553 ..... 354, 359, 384, 390
1001214555 ..... 354, 359, 384, 390
1001214556 ..... 354, 359, 384, 390
1001214558 ..... 354, 359, 384, 390
1001214570 799
1001214571 799
1001214598 ..... 354, 360, 384, 390
1001214599 ..... 354, 360, 384, 390
1001214608 885
1001214614 935
1001214664 ..... 354, 360, 384, 390
1001214691 934
1001214694 ..... 354, 360, 384, 390
1001214729 ..... 354, 384
1001214803 337
1001214833 934
1001214837 411
1001214838 411
1001214841 ..... 354, 360, 384, 390
1001214862 ..... 294, 318
1001214909 435
1001214910 471
1001214975 ..... 215, 227, 239
1001215125 ..... 354, 360, 384, 390
1001215228 ..... 588, 596, 600
1001215259 ..... 337, 343, 368, 374
1001215373 135
1001215509 23
1001215523 472
1001215634 176
1001215801 ..... 337, 343, 368, 374
1001215869 ..... 354, 360, 384, 390
1001216080 ..... 368, 374
1001216219 ..... 307, 327, 331
1001216222 ..... 299, 306
1001216223 ..... 323, 330
1001216224 ..... 293, 299
1001216225 ..... 318, 323
1001216226 293
1001216227 317
1001216325 176
1001216326 176
1001216396 ..... 337, 343, 368, 374
1001216397 ..... 337, 343, 368, 374
1001216399 ..... 338, 344, 368, 374
1001216407 ..... 141, 143, 149, 151
1001216408 ..... 889, 907, 911
1001216512 415
1001216547 415
1001216548 415
1001216549 415
1001216552 935
1001216598 176
1001216630 ..... 521, 523, 525
1001216653 ..... 123, 143
1001216655 ..... 687, 719, 737, 769
1001216800 736
1001216801 ..... 686, 772
1001216805 ..... 436, 472
1001216825 ..... 354, 360, 384, 390
1001216826 ..... 377, 382
1001216827 ..... 368, 377
1001216840 436
1001216842 367
1001216914 933
1001217342 ..... 435, 471
1001217343 ..... 352, 358, 382, 388
1001217344 ..... 435, 471
1001217345 ..... 338, 344, 368, 374, 435, 471
1001217488 ..... 893, 895
1001217494 ..... 337, 343, 352, 358, 368, 374, 382, 388
1001217785 ..... 337, 343, 367, 373
1001218534 201
1001218538 201
1001218676 201
1001218717 934
1001218983 885
1001218984 889
1001218985 907
1001218986 911
1001219130 201
1001219134 192
1001219348 ..... 338, 368
1001219601 135
1001219794 935
1001219866 131
1001220287 ..... 131, 149
1001220381 123
1001220920 515
1001220921 515
1001220924 515
1001221481 483
1001221482 ..... 483, 493
1001221483 ..... 493, 503
1001221484 ..... 503, 505
1001221486 ..... 503, 505
1001221879 933
1001221927 ..... 485, 497, 509
1001222043 192
1001222044 192
1001222196 933
1001223055 ..... 883, 885, 887, 889
1001223078 ..... 172, 192
1001223122 ..... 440, 444, 448, 452, 456, 460, 465, 468
1001223161 ..... 172, 192
1001223309 417
1001223310 417
1001223328 417
1001223387 192
1001223453 ..... 883, 885, 887, 889, 905, 909, 911
1001223454 417
1001223899 ..... 499, 501, 505
1001223971 ..... 905, 907, 909, 911
1001224048 ..... 917, 919
1001224049 ..... 921, 923
1001224050 ..... 901, 903
1001224052 ..... 897, 899
1001224053 ..... 913, 915
1001224888 ..... 513, 515
1001225346 799
1001225580 ..... 621, 843
1001226400 ..... 805, 807
1001226531 799
1001226872 575
1001227453 933
1001227633 623
1001227634 623
1001227985 623
1001227987 623
1001227996 ..... 877, 879
1001228012 ..... 499, 503, 657
1001228075 ..... 485, 489, 493, 667
1001228092 ..... 477, 479, 481, 483, 653
1001228215 575
1001228224 623
1001228225 623
1001228243 571
1001228363 936
1001228375 573
1001228376 567
1001228377 569
1001228406 180
1001228487 ..... 89, 92
1001228492 89
1001228955 933
1001228988 ..... 633, 635, 637
1001229107 933
1001229341 623
1001229795 835
1001229796 835
1001229798 ..... 338, 344, 368, 374, 835
1001230635 ..... 259, 273
1001230784 817
1001230907 817
1001230931 867
1001231195 ..... 103, 105, 109
1001231235 936
1001231801 925
1001232026 ..... 883, 885, 887, 889, 891, 893, 897, 899, 901, 903, 907, 909, 911, 913, 915, 917, 919, 921, 923
1001232036 905
1001232066 895
1001232164 623
1001232165 623

1001232642 625
1001232643 936
1001232650 625
1001232667 625
1001232842 277
1001232907 199
1001232908 199
1001232913 199
1001232915 199
1001232916 199
1001232917 199
1001233048 199
1001233075 199
1001233076 199
1001233077 199
1001233139 19
1001233237 933
1001233412 199
1001233413 199
1001233436 199
1001233763 .....266, 277
1001234099 932
1001235011 625
1001235013 625
1001235119 934
1001235455 .....235, 239, 241
1001235460 231
1001235461 .....231, 235
1001235462 .....235, 238
1001235531 .....147, 151
1001235533 .....129, 147
1001235534 129
1001235760 935
1001236223 935
1001236224 935
1001236250 343
1001236252 373
1001236254 .....343, 349
1001236256 .....349, 358
1001236257 .....359, 389
1001236258 .....374, 379
1001236259 .....379, 388
1001236303 115
1001236304 799
1001236338 925
1001236393 .....359, 389, 393
1001236496 936
1001236504 799
1001236505 799
1001236552 625
1001236746 934
1001236747 934
1001237549 199
1001237862 .....877, 879
1001237863 .....623, 877
1001237864 .....623, 879
1001237865 .....623, 875
1001238319 623
1001238418 .....625, 873
1001238421 525
1001238424 121
1001238425 125
1001238426 133
1001238463 934
1001238472 625
1001238477 625
1001238495 621
1001238559 625
1001238824 625
1001238887 .....139, 141
1001238888 .....121, 139
1001238889 .....133, 151
1001238890 .....125, 141
1001238932 115
1001239802 65
1001241283 180
1001241288 180
1001241291 .....180, 185
1001241292 .....180, 189
1001241339 933
1001241340 933
1001241341 933
1001241965 625
1001242639 933
1001242840 581
1001242845 .....581, 599
1001242851 165
1001242852 169
1001243168 .....600, 849
1001243183 933
1001243184 933
1001243414 180
1001243869 421
1001243870 421
1001243895 277
1001244873 479
1001244874 .....479, 497
1001245454 643
1001246860 934
1001246867 934
1001247048 .....489, 501
1001247073 936
1001247468 525
1001247623 .....493, 505
1001247800 936
1001248012 .....499, 501, 503, 505, 659
1001250287 180
1001250289 180
1001251075 .....489, 497, 669
1001253892 185
1001253893 189
1001253896 185
1001253897 189
1001253903 .....185, 189
1001259230 .....185, 189
1060341 617
1060343 .... 460, 465, 468, 472
1060494 .... 424, 428, 432, 436
1060625 ..... 219, 265, 311
1060626 .... 219, 265, 311, 317, 367, 373
1060903 617
1060908 .....819, 821
1060918 607
1060919 553
1060983 .....533, 537
1060984 535
1060985 527
1060986 529
10702077 ...456, 461, 465, 469, 473
10702082 ...456, 461, 465, 469, 473
1120552 45
1120555 629
1260017 99
1271538 523
1320016 .....214, 226, 238
1320136 523
1320176 .....407, 409
1320187 .....207, 219, 231, 265
1320190 .....207, 219, 231, 265
1320218 65
1320220 65
1320223 .....219, 265, 311, 317, 367, 373
1320224 .....208, 220, 232, 523
1320302 .....633, 635, 637
1320323 333
1321283 .....338, 343, 367, 373
1321700 537
1321716 .....105, 109, 258, 272, 287, 311, 338, 368, 423, 427, 431, 440, 444, 448, 452, 456, 460, 464, 468
1380147 .....419, 421
1580011 .....302, 306, 326, 330, 352, 358, 382, 388
1580012 615
1580013 935
1600387 523
1670603 795
1670769 .....533, 535, 537
1670829 .....137, 139, 141, 143, 145, 147, 149, 151, 583, 587, 591, 595, 599
1671092 .....461, 465, 468, 472
1671093 635
1671176 .....137, 145
1683053 655
1683261 655
1683609 .....499, 503, 655
1683687 655
1684290 643
1700818 925
1701499 .....883, 885, 887, 889, 891, 893, 895, 897, 899, 901, 903, 905, 907, 909, 911, 913, 915, 917, 919, 921, 923
1701500 .....883, 885, 887, 889, 891, 893, 895, 897, 899, 901, 903, 905, 907, 909, 911, 913, 915, 917, 919, 921, 923
1701504 .... 883, 885, 887, 889, 891, 893, 895, 897, 899, 901, 903, 905, 907, 909, 911, 913, 915, 917, 919, 921, 923
1701505 .... 207, 219, 231, 251, 265, 925
1701509 .... 629, 883, 885, 887, 889, 891, 893, 895, 897, 899, 901, 903, 905, 907, 909, 911, 913, 915, 917, 919, 921, 923
1701518 ..... 891, 893, 895
1701529 .... 883, 885, 887, 889, 891, 893, 895, 897, 899, 901, 903, 905, 907, 909, 911, 913, 915, 917, 919, 921, 923
1701542 .... 287, 293, 311, 317, 337, 343, 367, 373, 925
1701543 .... 287, 293, 311, 317, 337, 343, 367, 373, 925
1702300 .... 883, 885, 887, 889, 891, 893, 895, 897, 899, 901, 903, 905, 907, 909, 911, 913, 915, 917, 919, 921, 923
1702565 .... 583, 587, 591, 595, 599
1702566 .... 583, 587, 591, 595, 599
1702567 .... 583, 587, 591, 595, 599
1702720 925
1702740 ..... 43, 45, 51
1702773 .... 553, 893, 895, 925
1702774 925
1702788 925
1702861 925
1702868 .... 635, 637, 883, 885, 887, 889, 907, 911, 933
1702938 617
1702941 .... 219, 265, 311, 317, 367, 373
1702942 .... 219, 265, 311, 317, 367, 373
1702943 .... 219, 265, 311, 317, 367, 373
1702944 .... 219, 265, 311, 317, 367, 373
1702968 61
1703067 55
1703162 .... 214, 226, 238, 258, 272, 302, 306, 326, 330, 352, 358, 382, 388
1703175 933
1703479 925

1703797 ....883, 885, 887, 889, 907, 911
1703798 ....883, 885, 887, 889, 907, 911
1703804 ....883, 885, 887, 889, 907, 911
1703805 ....883, 885, 887, 889, 907, 911
1703923 ..... 921, 923
1703924 ..... 905, 909
1703925 ..... 901, 903
1703926 ..... 913, 915
1703927 ..... 917, 919
1703928 ..... 897, 899
1703929 ..... 921, 923
1703930 ..... 905, 909
1703931 ..... 901, 903
1703932 ..... 913, 915
1703933 ..... 917, 919
1703934 ..... 897, 899
1703935 ..... 921, 923
1703936 ..... 905, 909
1703937 ..... 901, 903
1703938 ..... 913, 915
1703939 ..... 917, 919
1703940 ..... 897, 899
1703942 ..... 907, 911
1703947 ..... 921, 923
1703948 ..... 905, 909
1703949 ..... 901, 903
1703950 ..... 913, 915
1703951 ..... 917, 919
1703952 ..... 897, 899
1703953 ....883, 885, 887, 889, 897, 899, 901, 903, 905, 909, 913, 915, 917, 919, 921, 923
1703980 ..... 913, 915
1703981 ..... 917, 919
1703982 ..... 901, 903
1703983 ..... 921, 923
1703984 .....905, 907, 909
1703985 ..... 897, 899
1704000 .....905, 909, 933
1704001 ..... 921, 923
1704002 ..... 897, 899
1704174 925
1704175 925
1704260 ....583, 587, 591, 595, 599
1704271 925
1704277 ....883, 885, 887, 889, 891, 893, 895, 897, 899, 901, 903, 905, 907, 909, 911, 913, 915, 917, 919, 921, 923
1704412 ....883, 885, 887, 889, 891, 893, 895, 897, 899, 901, 903, 905, 907, 909, 911, 913, 915, 917, 919, 921, 923
1704472 925
1704473 925
1704578 61
1704885 925
1704972 925
1705014 553
1705084 .....891, 893
1705305 ..... 633, 635, 637
1705325 781
1705351 .... 883, 885, 887, 889
1705355 .....633, 635
1705358 629
1705363 45
1705364 45
1705374 ..... 443, 447, 451
1705375 .... 461, 465, 469, 473, 635, 637
1705387 .... 443, 447, 451, 461, 465, 469, 473
1705426 .....913, 915
1705427 .....917, 919
1705429 .... 905, 907, 909, 911
1705430 .....901, 903
1705460 .... 457, 461, 465, 469, 473
1705461 457
1705466 ..... 633, 635, 637
1705489 .....439, 457
1705514 .... 883, 885, 887, 889, 905, 907, 909, 911
1705822 ..... 891, 893, 895
1705828 ..... 891, 893, 895
1705905 .....897, 899
1705910 .....921, 923
1705921 ..... 891, 893, 895
1705961 ..... 891, 893, 895
1706059 925
1706060 925
1706061 925
1706062 925
1706063 925
1706064 925
1706098 925
1706385 553
2030010 ..... 633, 635, 637
2060025 .... 214, 226, 238, 303, 307, 327, 331
2080040 .... 439, 541, 543, 545, 555, 557, 559, 567, 571, 797, 815
2080044 537
2110810 .... 678, 686, 694, 702, 710, 718, 728, 736, 744, 752, 760, 768
2110812 .... 678, 686, 694, 702, 710, 718, 728, 736, 744, 752, 760, 768
2111216 .... 678, 686, 694, 702, 710, 718, 728, 736, 744, 752, 760, 768
2131212 .... 686, 694, 702, 718, 736, 744, 752, 760, 768
2131216 .... 678, 686, 694, 702, 710, 718, 728, 736, 744, 752, 760, 768
2151212 .... 678, 694, 702, 710, 728, 752
2180125 65
2180348 .....207, 219, 231, 287, 293, 311, 317, 337, 343, 367, 373
2180380 651
2180387 65
2180388 65
2180389 65
2180418 65
2180504 .....354, 360, 384, 390
2180832 .....251, 265
2180877 .....302, 306, 326, 330
2220005 65
2220064 .....354, 360, 384, 390
2220124 97
2220237 .....678, 686, 728, 736
2220238 .....61, 101, 678, 686, 728, 736
2220261 .....65, 352, 358, 382, 388
2220273 97
2220313 .....207, 219, 231, 251, 265
2220315 .....214, 226, 238, 258, 272, 302, 306, 326, 330, 352, 358, 382, 388
2220365 .....678, 694, 702, 710, 728, 744, 752, 760
2220366 .....678, 686, 694, 702, 710, 718, 728, 736, 744, 752, 760, 768
2220371 .....678, 686, 694, 702, 710, 718, 728, 736, 744, 752, 760, 768
2220372 .....61, 678, 686, 694, 702, 710, 718, 728, 736, 744, 752, 760, 768
2220373 .....678, 686, 694, 702, 710, 718, 728, 736, 744, 752, 760, 768
2220374 .....678, 686, 694, 702, 710, 718, 728, 736, 744, 752, 760, 768
2220375 .....678, 686, 694, 702, 710, 718, 728, 736, 744, 752, 760, 768
2220377 .....678, 686, 694, 702, 710, 718, 728, 736, 744, 752, 760, 768
2220415 .....678, 686, 694, 702, 710, 718, 728, 736, 744, 752, 760, 768
2220451 .....214, 226, 238, 678, 686, 694, 702, 710, 718, 728, 736, 744, 752, 760, 768
2220466 .....678, 686, 694, 702, 710, 718, 728, 736, 744, 752, 760, 768
2220468 .....678, 686, 694, 702, 710, 718, 728, 736, 744, 752, 760, 768
2220472 .... 728, 736, 744, 752, 760, 768
2220473 .... 678, 686, 694, 702, 710, 718, 728, 736, 744, 752, 760, 768
2220497 .... 686, 720, 736, 770
2220500 .... 678, 694, 702, 710, 718, 728, 744, 752, 760, 768
2220501 .... 678, 686, 694, 702, 710, 718, 728, 736, 744, 752, 760, 768
2220502 .... 678, 686, 694, 702, 710, 718, 728, 736, 744, 752, 760, 768
2220577 .... 678, 686, 694, 702, 710, 718, 728, 736, 744, 752, 760, 768
2220579 61
2220582 .... 678, 686, 694, 702, 710, 718, 728, 736, 744, 752, 760, 768
2220596 .... 694, 702, 710, 718, 744, 752, 760, 768
2220600 .... 678, 686, 694, 702, 710, 718, 728, 736, 744, 752, 760, 768
2220603 .....720, 770
2220622 .... 694, 702, 710, 744, 752, 760
2220628 .... 678, 686, 694, 702, 710, 718, 728, 736, 744, 752, 760, 768
2220648 65
2220695 .... 678, 686, 694, 702, 710, 718, 728, 736, 744, 752, 760, 768
2220726 .... 678, 686, 694, 702, 710, 718, 728, 736, 744, 752, 760, 768
2220767 .....251, 265
2220775 .... 678, 686, 694, 702, 710, 718, 728, 736, 744, 752, 760, 768
2220881 .... 645, 665, 667, 669
2220883 .... 35, 37, 39, 41, 74, 78, 81, 643, 647, 649, 651, 653, 655, 657, 659
2220885 .... 655, 657, 659, 665, 667, 669
2220886 .35, 37, 651, 669
2220887 .....111, 651
2220888 37
2220906 .... 678, 686, 694, 702, 710, 718, 728, 736, 744, 752, 760, 768
2220923 .... 678, 686, 694, 702, 710, 718, 728, 736, 744, 752, 760, 768
2220946 .... 678, 686, 694, 702, 710, 718, 728, 736, 744, 752, 760, 768

SECTION 11 - SPECIAL OPTIONS

2220947.....678, 686, 694, 702, 710, 718, 728, 736, 744, 752, 760, 768
2220998.....678, 686, 694, 702, 710, 718, 728, 736, 744, 752, 760, 768
2221018..... 65
2221019..... 65
2221024..... 65
2221040.....695, 703, 711, 718, 745, 753, 761, 768
2221052..... 61
2221086.....41, 679, 687, 695, 703, 711, 718, 729, 737, 745, 753, 761, 768
2300004.....258, 302, 306, 354, 360
2300014..... 935
2300016.....23, 25, 935
2300021..... 935
2300027..... 935
2300029..... 935
2300039..... 935
2300041.....272, 326, 330, 382, 388
2400060.....277, 837, 868
2400066..... 837
2400082.....835, 928
2410014..... 553
2420202..... 523
2420203.....423, 428, 431, 436
24431386...338, 344, 368, 374
2460048.....455, 459, 467
2460051..... 431
2460055..... 423
2540020.....163, 165, 167, 169
2540038..... 523
2560136.....583, 587, 591, 595, 599
2560187.....183, 185, 187, 189, 195, 197
2580024.....266, 311, 317, 367, 373
2580050.....219, 265, 311
2580062..... 226
2580063.....327, 331
2600281.....541, 543, 545, 555, 557, 559, 567, 571
2720015.....258, 272
2720058.....207, 219, 231, 354, 360, 384, 390
2720144..... 65
2720271.....302, 306, 326, 330, 354, 360, 384, 390
2720340.....258, 272
2720392..... 65
2720398.....214, 227, 238
2720447.....214, 227, 238
2720615.....354, 360, 384, 390
2720644.....352, 358, 382, 388
2750532.... 207, 220, 231, 252, 266
2752500.... 687, 719, 737, 769
2780267..... 23, 25, 27
2780268.....25, 31
2820031.... 423, 427, 431, 435, 439, 443, 447, 451, 455, 459, 463, 467, 471
2820035.....277
2820247.....877, 879
2840016.....419, 421
2860030.... 153, 155, 157, 159, 928
2900756.....41
2900770.. 73, 77, 78, 645, 665, 667, 669
2900792..... 655, 657, 659
2901303.....655
2901443.....936
2902065.... 214, 227, 238, 258, 272, 397
2902212.....629
2902217.....633, 635
2902266.....643
2902443.....823, 825
2902549..... 815, 817, 821
2915102.....932
2920028.... 592, 595, 599, 617
2920029.... 592, 595, 599, 617
2940045.....197
2940074.... 541, 543, 545, 555, 557, 559, 567, 571, 929
2940173.... 183, 185, 187, 189, 195, 197
3020008.....23, 25
3020021.....397
3020037.... 211, 223, 235, 255, 269, 297, 299, 321, 323
3020039.....17
3020043..... 647, 649, 651
3020044.....226
3160348.....25, 37
3160351.....23, 35
3200406.... 302, 306, 326, 330
3250872.....61
3251242.... 783, 787, 791, 793, 795
3251243.... 423, 427, 431, 435, 443, 447, 451, 883, 885, 887, 889, 897, 899, 905, 907, 909, 911, 921, 923
3252347.... 883, 885, 887, 889
3252507.....779
3252764.... 455, 460, 463, 467, 471
3271601.... 172, 176, 180, 192
3271605.....665, 667
3271805..... 553
3272605..... 523
3290401.....65, 333
3290405.....519, 781, 783, 785, 787, 789, 791, 793, 795, 797, 813, 815, 817
3290501..... 333
3290505.....161, 443, 447, 451, 456, 460, 463, 467, 471
3290601.....183, 185, 187, 189, 195, 197, 679, 687, 695, 703, 711, 718, 729, 737, 745, 753, 761, 768
3290605.....113, 115, 119, 127, 135, 163, 165, 167, 169, 192, 197, 207, 214, 219, 226, 231, 238, 251, 258, 265, 272, 287, 293, 311, 317, 333, 337, 343, 367, 373, 413, 415, 417, 423, 427, 431, 435, 439, 443, 447, 451, 456, 460, 463, 467, 471, 519, 797, 815, 817
3290606.....547, 549, 551, 561, 563, 565, 569, 573
3290607.....302, 306, 326, 330, 352, 358, 382, 388
3290801.....352, 358, 382, 388
3290805.....61, 207, 214, 219, 226, 231, 238, 251, 258, 265, 272, 287, 293, 302, 306, 311, 317, 326, 330, 337, 343, 352, 358, 367, 373, 382, 388, 413, 415, 417, 423, 427, 431, 435, 439, 443, 447, 451, 456, 460, 463, 468, 471, 799
3291001.....258, 272, 302, 306, 326, 330, 352, 358, 382, 388, 525
3291005 61, 97, 103, 105, 107, 109, 119, 121, 123, 125, 127, 129, 131, 133, 172, 176, 180, 183, 185, 187, 189, 192, 195, 197, 199, 207, 214, 219, 226, 231, 238, 251, 258, 265, 272, 287, 293, 302, 306, 311, 317, 326, 330, 337, 343, 352, 358, 367, 373, 382, 388, 415, 423, 427, 431, 435, 499, 501, 503, 505, 513, 515, 519, 525, 527, 529, 531, 533, 535, 537
3291007.... 287, 293, 311, 317
3291201.... 101, 352, 358, 382, 388, 427, 435, 439, 443, 447, 456, 460, 463, 471, 525
3291205.... 101, 419, 421, 477, 479, 481, 483, 485, 489, 493, 497, 521, 525
3291602.....83, 89
3291605.... 477, 479, 481, 483
3292001.....101
3300106.....23, 25
3300151.... 547, 549, 551, 561, 563, 565, 567, 569, 571, 573, 575, 633, 635, 637
3300220.... 113, 115, 214, 226, 238, 259, 273
3300243.....521, 525
3300353.... 583, 587, 591, 595, 599
3300396.... 444, 448, 452, 456, 461, 465, 468, 472
3300408.... 137, 139, 141, 143, 145, 147, 149, 151, 583, 587, 591, 595, 599
3300430..... 619, 621, 627
3310401.....258, 272
3310601.....419, 421
3311001.... 279, 423, 427, 431, 435, 444, 448, 452, 456, 461, 465, 468, 472
3311005.... 163, 165, 167, 169, 633, 635, 637
3311401.....617
3311405.... 523, 577, 579, 581, 625, 781, 783, 785, 787, 789, 791, 793, 795, 799, 813, 883, 885, 887, 889, 891, 893, 895, 897, 899, 901, 903, 905, 907, 909, 911, 913, 915, 917, 919, 921, 923
3311501.... 111, 119, 121, 123, 125, 127, 129, 131, 133, 172, 176, 180, 192, 617
3311505..... 172, 176, 180
3311601..... 65, 180, 583, 588, 592, 596, 600, 625
3311605..... 61, 279, 553, 577, 579, 581, 633, 635, 637
3311705..... 423, 427, 435
3311801.....23, 25
3311805..... 521, 523, 525
3312005..... 63, 523, 629
3312205.....629
3321001.... 113, 115, 214, 226, 238, 259, 273

3331211 ....302, 306, 326, 330, 423, 427, 431, 439, 443, 447, 451, 456, 460, 463, 468, 471
3331215 ....214, 226, 238, 258, 272
3340956 629
3380434 .....577, 579, 581
3420352 63
3420372 63
3421565 99
3422532 ....207, 219, 231, 251, 265, 287, 293, 311, 317, 337, 343, 367, 373
3422793 ..... 489, 493
3422848 21
3422860 ....499, 501, 503, 505
3422861 ....499, 501, 503, 505
3422867 ....499, 501, 503, 505
3423304 ..... 19, 21
3430616 .....588, 596, 600
3430820 ..... 419, 421
3450404 ..... 419, 421
3460334 629
3470003 ....583, 588, 592, 596, 600
3480210 655
3480211 .....647, 649, 651
3480274 665
3520026 ..... 584, 587
3520027 ..... 584, 587
3520028 ....423, 428, 431, 436
3520033 ..... 587, 595
3520034 ..... 499, 503
3520035 587
3520054 ....214, 226, 238, 260, 274, 583, 587, 591, 595, 599
3520071 629
3520072 ....541, 543, 545, 547, 549, 551, 553, 567, 569, 571, 573, 575
3520182 627
3520189 456
3520192 456
3520198 ....541, 543, 545, 547, 549, 551, 567, 569, 571, 573, 575
3573400 .....633, 635, 637
3573642 .....633, 635, 637
3574091 617
3577121 .....633, 635, 637
3580158 423
3580276 423
3580312 .....431, 451, 468
3580314 ..... 451, 468
3580317 ....439, 443, 447, 456, 460, 463, 471
3580318 ....443, 447, 460, 463, 471
3580319 ..... 439, 456
3580320 .... 427, 439, 443, 447, 456, 460, 463
3580324 431
3580348 ..... 431, 451, 468
3600242 .... 211, 223, 255, 269, 297, 299, 321, 323, 347, 377, 399
3740067 .... 113, 115, 214, 226, 238, 928
3740080 .... 424, 427, 431, 435, 837
3740086 873
3740140 .... 214, 226, 238, 928
3760133 .... 485, 489, 493, 497
3760170 .....63, 99
3760368 655
3790012 .... 127, 129, 131, 133, 287, 293, 311, 317, 337, 343, 367, 373, 583, 587, 591, 595, 599, 609, 611
3790152 .... 211, 223, 235, 255, 269, 297, 299, 321, 323, 347, 349, 377, 379
3820001 ..... 61, 883, 885, 887, 889, 891, 893, 895, 897, 899, 901, 903, 905, 907, 909, 911, 913, 915, 917, 919, 921, 923
3820020 .... 541, 543, 545, 555, 557, 559, 567, 571
3841143 19, 21, 207, 219, 231, 251, 265, 287, 293, 311, 317, 337, 343, 367, 373, 485, 497, 499, 501, 503, 505, 525
3841203 .... 477, 479, 481, 483, 489, 493
3841258 ..... 17, 477, 479, 481, 483
3841340 .... 527, 529, 531, 533, 535, 537
3900054 553
3900267 ..... 444, 448, 452
3900283 523
3900295 21
3900300 ..... 444, 448, 452
3900332 65
3900349 ..... 588, 596, 599
3910408 .....258, 272
3910606 .... 443, 447, 451, 460, 463, 468, 471
3910610 .... 419, 421, 777, 779
3910804 .... 153, 155, 157, 159
3911010 .... 163, 165, 167, 169
3911018 .... 137, 139, 141, 143, 145, 147, 149, 151, 583, 587, 591, 595, 599
3931408 .....619, 621
3931424 619
3931456 .....665, 667
3931512 .....258, 272
3931516 655
3931520 .....665, 667
3931618 .....211, 223, 235, 255, 269, 299, 323, 347, 349, 377, 379
3931620 .....211, 223, 255, 269, 297, 299, 321, 323, 347, 377
3931628 .....427, 447, 463
3960389 199
3960407 .....214, 226, 238
3960422 .....443, 447, 451, 460, 463, 468, 471, 777, 779
3960526 .....23, 25
4010405 .....797, 813, 815, 817
4010618 .....547, 549, 551, 561, 563, 565, 569, 573
4031505 623
4031516 625
4031711 .....352, 382
4031914 .....258, 272
4032014 .....427, 447, 463
4032015 .....439, 443, 456, 460
4060092 779
4060802 .....424, 427, 431, 435, 439, 443, 447, 451, 456, 460, 463, 468, 471
4060805 .....214, 227, 238, 258, 272, 302, 306, 326, 330
4060906 .....137, 139, 141, 143, 145, 147, 149, 151
4061054 523
4070450 63
4070560 63
4070561 63
4070897 .....485, 489, 493, 497
4070898 .....485, 489, 493, 497
4071009 89
4100100 655
4160182 .....172, 176, 180
4240018 .....678, 686, 694, 702, 710, 718, 728, 736, 744, 752, 760, 768
4240032 161
4240033 .....523, 619, 621, 623, 625
4240099 .....119, 121, 123, 125, 127, 129, 131, 133, 163, 165, 167, 169, 207, 214, 219, 226, 231, 238, 251, 258, 265, 272, 277, 287, 293, 302, 306, 311, 317, 326, 330, 333, 337, 343, 352, 358, 367, 373, 382, 388, 424, 427, 432, 435, 439, 443, 447, 451, 456, 460, 463, 468, 471, 591, 595, 599, 617, 633, 635
4240149 629
4280296 .....57, 59
4360057 .....617, 929
4360070 .... 444, 448, 452, 456, 461, 465, 468, 472
4360328 .... 127, 129, 131, 133, 928
4360336 .... 424, 427, 432, 435, 439, 443, 447, 451, 456, 460, 463, 468, 471, 929
4360387 .... 155, 159, 583, 587, 591, 595, 599, 617, 928, 929
4360407 .... 583, 587, 591, 595, 599, 928
4360469 .... 153, 155, 157, 159
4360475 .... 137, 139, 141, 143, 145, 147, 149, 151, 583, 587, 591, 595, 599, 928
4360476 .... 137, 139, 141, 143, 145, 147, 149, 151, 583, 587, 591, 595, 599, 928
4360517 101
4360542 .... 423, 428, 431, 436
4400275 65
4420014 629
4420037 ..... 633, 635, 637
4420051 .....61, 925
4420066 629
4420068 617
4460016 .....847, 849
4460027 .... 423, 428, 431, 436
4460042 ..... 831, 833, 868
4460043 ..... 277, 825, 868
4460049 617
4460068 868
4460071 .... 443, 447, 451, 460, 463, 468, 471, 607, 777, 779
4460125 779
4460134 .... 424, 428, 432, 436
4460138 .... 424, 428, 432, 436
4460183 .....847, 849
4460190 .... 423, 428, 431, 436
4460205 777
4460225 .... 456, 460, 463, 468, 471, 839, 841, 847, 849
4460226 .... 603, 605, 607, 847, 849, 865, 868
4460227 ..... 101, 847, 849
4460233 779

SECTION 11 - SPECIAL OPTIONS

4460234.....161, 583, 587, 591, 595, 599, 617
4460247.....825, 868
4460259.....847, 849, 868
4460260.....847, 849, 868
4460265.....603, 605
4460267.....847, 849
4460268.....423, 428, 431, 436, 839, 841
4460313.....823, 829, 871
4460315.....777, 779
4460320..... 101
4460321.....423, 428, 431, 436
4460346.....443, 447, 451, 460, 463, 468, 471, 777
4460384..... 795
4460418.....841, 847, 849
4460419.....841, 847, 849
4460424..... 868
4460425.....444, 448, 452, 456, 461, 465, 468, 472, 617
4460426.....444, 448, 452, 456, 461, 465, 468, 472
4460428.....523, 525, 583, 587, 591, 595, 599
4460434.....847, 849
4460457..... 868
4460458..... 868
4460464.....161, 517, 519, 607, 801, 803, 809, 811, 833, 837, 843, 847, 849, 867, 868, 873
4460465.....517, 519, 801, 803, 805, 807, 809, 811, 823, 825, 829, 831, 839, 843, 845, 847, 849, 865, 867, 871
4460466.....338, 344, 368, 374, 623, 801, 805, 807, 823, 825, 829, 831, 837, 843, 845, 847, 849, 867, 868, 871, 873, 875
4460467..... 936
4460470.....119, 121, 123, 125, 127, 129, 131, 133, 583, 587, 591, 595, 599
4460471.....119, 121, 123, 125, 127, 129, 131, 133, 583, 587, 591, 595, 599
4460473.....805, 807
4460508.....623, 868
4460509.....805, 807
4460510..... 936
4460518..... 801
4460536.....135, 517, 519, 809, 811
4460539.....517, 519, 809, 811, 871
4460608..... 867
4460662..... 795
4460693.....829, 831
4460703..... 825
4460705.... 423, 428, 431, 436
4460708..... 849
4460722..... 277
4460742..... 868
4460748..... 868
4460761.....847, 849
4460806..... 787, 791, 868
4460807..... 839
4460808..... 839
4460836.....845, 867
4460837..... 867
4460865.....805, 807
4460866..... 847, 849, 868
4460871.... 841, 847, 849, 867, 868, 871
4460872..... 871
4460873..... 847, 849, 867
4460874..... 847, 849, 867
4460875..... 847, 849, 871
4460876..... 841
4460878..... 867
4460879.....847, 849
4460884.... 825, 843, 865, 867
4460887..... 847, 849, 867
4460891.... 801, 803, 825, 833, 867, 871
4460894.... 823, 825, 829, 831, 849, 867, 871
4460897.... 161, 163, 165, 167, 169, 803, 833
4460899.... 811, 843, 867, 873, 875
4460905.... 841, 847, 849, 867, 868, 871
4460906..... 837
4460910..... 879
4460911..... 875
4460928..... 801
4460930.... 338, 344, 368, 374, 809, 823, 825
4460931..... 868
4460932..... 833
4460933.... 801, 845, 847, 849, 867
4460941.....833, 875
4460942.....623, 833
4460943.... 135, 163, 165, 167, 169, 875
4460944.....825, 845
4460956.....819, 821
4460957.....819, 821
4460961.... 423, 428, 431, 436
4460962..... 635
4460963.... 461, 465, 468, 472
4460967..... 867
4460970.....847, 849
4460977..... 835
4461005..... 823
4461008.....823, 825
4461052..... 823
4461070.....801, 825
4461071.....823, 825
4461072.....823, 825
4461073.....823, 825
4461074.....823, 825
4461077.....873, 875
4461095.....801, 823, 825
4461109.....829, 831
4461111.....829, 831
4461113..... 831
4461121.....829, 831
4461122.....829, 831
4461123..... 831
4461124.....829, 831
4461196..... 851
4461198..... 851
4461199..... 853
4461201..... 853
4461202.....855, 857
4461205.....855, 857, 859, 861
4461244..... 857
4461245..... 861
4461246..... 863
4461249..... 863
4520212..... 55
4520216.....43, 45, 47
4520240..... 49
4520259.....51, 53
4530028.....633, 635, 639
4568735.....432, 451, 468
4640113.....43, 45, 51, 55
4640261..... 61
4640452.....665, 667, 669
4640509.....655, 657, 659
4640751.....258, 272
4640858..... 643
4640952.....302, 306, 326, 330
4641122.....47, 49, 53
4641390.....647, 649, 651, 653
4710400.....258, 272
4711000.....163, 165, 167, 169, 279, 444, 448, 452, 456, 461, 465, 469, 473
4711400.....183, 185, 187, 189, 195, 197, 523, 547, 549, 551, 561, 563, 565, 567, 569, 571, 573, 575, 619, 621, 625, 627, 781, 783, 785, 787, 789, 791, 793, 795, 813
4711500.....113, 115, 172, 176, 180, 208, 219, 231, 252, 258, 265, 272, 287, 293, 312, 318, 337, 343, 367, 373, 583, 592
4711600 69, 71, 180, 192, 279, 439, 443, 447, 456, 460, 463, 523, 581, 588, 596, 600, 665, 667
4711700.....424, 427, 432, 435
4711800.....451, 468, 553
4712000..... 629
4712200..... 629
4740086.....19, 21
4740155..... 21
4740158..... 17
4740274.... 302, 306, 326, 330
4740362..... 577, 579, 581
4740397..... 609
4740439.... 499, 501, 503, 505
4740491..... 21
4750600.....419, 421
4751000.... 103, 105, 107, 109, 424, 427, 432, 435, 633, 635, 637
4751400.... 111, 523, 581, 583, 587, 591, 595, 599, 615, 617, 627, 633, 635, 637, 799, 883, 885, 887, 889, 891, 893, 895, 897, 899, 901, 903, 905, 907, 909, 911, 913, 915, 917, 919, 921, 923
4751500.... 424, 427, 432, 435, 617
4751600.... 577, 579, 633, 635, 637
4751800.....553, 617
4752000..... 63
4760600.....777, 779
4761000.... 113, 115, 214, 226, 238, 259, 273
4761400..... 615
4770600.....419, 421
4811400.... 519, 781, 783, 785, 787, 789, 791, 793, 795
4811600.... 161, 443, 447, 451, 456, 460, 463, 468, 471
4811700.... 113, 115, 119, 121, 123, 125, 127, 129, 131, 133, 135, 163, 165, 167, 169, 183, 185, 187, 189, 195, 197, 207, 214, 219, 226, 231, 238, 251, 258, 265, 272, 288, 293, 302, 306, 311, 317, 326, 330, 333, 337, 343, 352, 358, 367, 373, 382, 388, 424, 427, 432, 435, 439, 443, 447, 451, 456, 460, 463, 468, 471, 533, 535, 537, 547, 549, 551, 561, 563, 565, 569, 573, 679, 687, 695, 703, 711, 718, 729, 737, 745, 753, 761, 768, 797, 815, 817
4811702.... 260, 274, 352, 358, 382, 388, 413, 415, 417, 679, 687, 695, 703, 711, 718,

729, 737, 745, 753, 761, 768
4811900 .....61, 192, 208, 214, 220, 226, 232, 238, 251, 258, 265, 272, 302, 306, 326, 330, 333, 337, 343, 352, 358, 367, 373, 382, 388, 424, 427, 432, 435, 439, 443, 447, 451, 456, 460, 463, 468, 471, 799
4811902 ....172, 176, 180, 192, 207, 219, 231, 251, 265, 352, 358, 382, 388
4812000 ....23, 25, 61, 69, 71, 97, 103, 105, 107, 109, 113, 115, 119, 121, 123, 125, 127, 129, 131, 133, 172, 176, 180, 183, 185, 187, 189, 192, 195, 197, 199, 207, 214, 219, 226, 231, 238, 251, 258, 265, 273, 287, 293, 302, 306, 311, 317, 326, 330, 333, 337, 343, 352, 358, 367, 373, 382, 388, 424, 427, 432, 435, 448, 465, 485, 489, 493, 497, 513, 515, 519, 525, 527, 529, 531, 533, 535, 537
4812002 69, 71, 103, 105, 107, 109, 119, 121, 123, 125, 127, 129, 131, 133, 172, 176, 180, 192, 415
4812100 ....101, 207, 219, 231, 251, 258, 265, 273, 338, 344, 367, 373, 419, 421, 439, 443, 456, 460, 485, 489, 493, 497, 525
4812102 61
4812200 ....214, 226, 238, 258, 273, 338, 344, 352, 368, 374, 382, 424, 427, 436, 439, 443, 447, 456, 460, 463, 472
4831400 333
4831600 333
4844816 ..... 499, 501
4844817 ..... 499, 501
4846562 629
4846573 ..... 521, 523
4846627 .....633, 635, 637
4846673 617
4860214 55
4871700 ....113, 115, 439, 443, 447, 456, 460, 463
4891600 61, 65, 211, 223, 235, 255, 269, 297, 299, 321, 323, 347, 349, 377, 379, 432, 451, 468, 521, 523, 525
4891800 23, 25, 211, 223, 235, 255, 269, 297, 299, 321, 323, 347, 349, 377, 379, 521, 523, 525
4892000 ... 23, 25, 95, 523
4892600 ..... 521, 523, 525
4920385 .... 302, 306, 326, 330
4922925 .... 456, 460, 463, 468, 471
4923451 ..... 215, 226, 239
4933218 .....617, 774
5240800 .... 207, 219, 231, 252, 265, 287, 293, 311, 317, 337, 343, 352, 358, 367, 373, 382, 388
5241200 .. 17, 19, 21, 214, 226, 238, 258, 273, 302, 306, 326, 330, 352, 358, 383, 388, 424, 427, 432, 435, 439, 443, 447, 451, 456, 460, 464, 468, 472, 521, 525
5241400 .... 352, 358, 382, 388
5241600 ..... 21, 83, 89
5242000 .....83, 89
5250605 .... 303, 307, 327, 331, 352, 358, 383, 388
5250608 .....517, 519
5250808 .... 440, 444, 448, 452, 456, 460, 465, 468
5250810 .... 260, 274, 440, 444, 448, 452, 456, 460, 465, 468
5251008 .... 485, 489, 493, 497, 517, 519, 525
5251009 .... 172, 192, 486, 490, 493, 497
5251010 .... 287, 293, 311, 317
5251011 .... 485, 489, 493, 497
5251012 ..... 23, 25, 192
5251014 .... 57, 59, 69, 71, 172, 176, 180
5251016 .....17, 525
5251215 .... 207, 219, 231, 251, 265, 287, 293, 311, 317, 337, 343, 367, 373
5260800 .... 440, 444, 448, 452, 456, 460, 465, 468
5261000 .....172, 192
5261018 .... 183, 187, 287, 293, 311, 317, 527, 529, 531, 533, 535, 537
5261200 .... 207, 219, 231, 251, 265, 287, 293, 311, 317, 337, 343, 367, 373
5271809 .....302, 306, 326, 330, 353, 383
70000342 ....507, 509, 511
70000345 ....242, 246, 283
70000619 ...455, 459, 463, 467, 471
70000781 .....39, 41
70000787 .....242, 246
70000793 397
70000797 .....35, 37
70000800 .....241, 245
70000851 .....242, 246
70000863 ...455, 459, 464, 467, 472
70000912 .....241, 245
70000913 .....241, 245
70000914 .....241, 245
70000915 .....241, 245
70000916 .....241, 245
70000917 .....241, 245
70000918 .....241, 245
70000919 .....242, 246
70000931 .....242, 246
70001002 .....241, 245
70001100 ...455, 459, 464, 467, 472
70001181 .....241, 245
70001349 .....27, 31
70001384 ...455, 459, 464, 467, 472
70001423 .....241, 245
70001435 .....242, 246
70001498 .....242, 246
70001654 .....241, 245
70001655 .....241, 245
70001696 ...455, 459, 464, 467
70001697 ....507, 509, 511
70001844 .....242, 246
70001850 .....241, 245
70001866 .....242, 246
70001868 .....242, 246
70001870 ....241, 245, 281
70001871 .....242, 246
70001872 .....242, 246
70001953 ....455, 459, 467
70001966 ...439, 444, 448, 451, 455, 459, 464, 467, 472
70001973 ...455, 459, 464, 467, 472
70001974 ...455, 459, 464, 467, 472
70002011 .....513, 515
70002057 92
7000206 .....27, 31
70002063 81
70002066 86
70002088 ....455, 459, 467
70002112 111
7000217 86
70002209 41
70002234 .....242, 246
70002257 402
7000228 86
7000229 .....27, 31, 86
70002291 .....464, 472
70002297 .. 455, 459, 464, 467, 472
7000230 ..... 27, 31, 86
70002316 393
70002318 393
7000232 .....27, 31
70002326 393
70002371 661
70002373 .....645, 661
70002386 74, 78, 81, 477, 481, 483, 653, 928
70002390 39
70002401 .....477, 481
70002412 669
7000246 ..... 27, 31, 86
70002460 .. 455, 459, 464, 467, 472
7000247 86
7000248 ..... 27, 31, 86
7000253 ..... 27, 31, 86
7000255 86
7000257 ..... 27, 31, 86
7000258 .....27, 31
7000261 .....27, 31
7000262 .....27, 31
7000263 ..... 27, 31, 86
70002718 ... 241, 245, 281
70002838 .. 103, 107, 111, 928
70002895 ... 327, 331, 929
70002902 607
70002903 607
70002904 607
70002905 607
70002962 41
70002974 .....73, 77
70003023 .....73, 77
70003024 .....73, 77
70003408 .....73, 77
70003463 ... 241, 245, 928
70003464 .....241, 245
70003468 .....242, 246
70003469 .....242, 246
70003472 .....241, 245
70003473 .....241, 245
70003475 .....241, 245
70003479 .....241, 245
70003480 .....241, 245
70003481 .....241, 245
70003612 117
70003614 ... 103, 107, 928
70003631 .. 455, 459, 464, 467, 472
70003708 .. 439, 444, 448, 451, 455, 459, 464, 467, 472
70003709 .. 439, 444, 448, 451, 455, 459, 464, 467, 472
70003783 .. 215, 227, 239, 259, 273, 928
70003788 ..... 74, 78, 477, 481, 483, 653, 928
70003931 .....242, 246
70003932 .....242, 246
70003977 .....73, 77
70004000 117

SECTION 11 - SPECIAL OPTIONS

70004013 117
70004014 117
70004017 41
70004020 ...303, 307, 327, 354, 384, 390, 928
70004037 86
70004039 86
70004040 86
70004041 86
70004042 86
70004043 86
70004044 86
70004045 86
70004047 87
70004048 87
70004056 .....242, 246
70004058 .....242, 246
70004059 .....242, 246
70004060 .....242, 246
70004062 .....242, 246
70004092 ...439, 444, 448, 451, 464, 472
70004093 464
70004094 .....464, 472
70004095 464
70004096 464
70004097 464
70004098 ...444, 448, 452, 464, 472
70004099 ....448, 464, 472
70004102 .....242, 246
70004103 .....242, 246
70004169 ....455, 459, 467
70004171 ...439, 444, 451, 455, 459, 467
70004231 653
70004267 117
70004268 .....241, 245
70004269 .....241, 245
70004270 .....242, 246
70004275 281
70004280 281
70004281 281
70004282 282
70004283 282
70004284 282
70004285 283
70004469 92
70004481 92
70004482 92
70004494 92
70004504 283
70004513 281
70004577 .....39, 41
70004676 ...439, 444, 448, 451
70004677 439
70004678 ...439, 444, 448, 452
70004679 ...440, 444, 448, 452
70004680 ...440, 444, 448, 452
70004681 440
70004682 ...440, 444, 448, 452
70004683 440
70004684 .....444, 452
70004685 ... 444, 448, 452
70004687 448
70004738 603
70004739 603
70004740 603
70004741 603
70004742 603
70004743 603
70004744 603
70004745 603
70004746 603
70004747 603
70004748 603
70004749 603
70004750 603
70004751 603
70004752 605
70004753 605
70004754 605
70004755 605
70004756 605
70004757 605
70004758 605
70004759 605
70004760 605
70004761 605
70004762 605
70004763 605
70004764 605
70004765 605
70004766 605
70004767 605
70004768 605
70004769 605
70004770 605
70004771 605
70004772 605
70004773 605
70004774 605
70004775 605
70004794 .. 103, 105, 107, 109
70004829 393
70004883 81
70004884 .....41, 81
70004885 .....39, 41
70004886 41
70004889 401
70004890 401
70004891 401
70004892 401
70004893 401
70004894 401
70004895 401
70004896 401
70004897 .....401, 928
70004898 401
70004899 402
70004900 402
70004901 402
70004902 402
70004903 402
70004904 402
70004905 402
70004906 402
70004907 402
70004908 402
70004909 402
70004910 402
70004911 402
70004983 101
70005065 117
70005066 117
70005067 117
70005068 117
70005069 .....73, 77
70005071 .....73, 77
70005072 .....73, 77
70005073 .....73, 77
70005074 .....73, 77
70005075 .....73, 77
70005076 .....73, 77
70005077 .....73, 77
70005078 .....73, 77
70005079 .....73, 77
70005080 .....73, 77
70005081 .....73, 77
70005082 .....73, 77
70005084 .....73, 77
70005085 .....73, 77
70005086 .....73, 77
70005087 .....73, 77
70005088 .....73, 77
70005089 .....73, 77
70005090 .....73, 77
70005091 .....73, 78
70005092 .....73, 77
70005093 77
70005106 .....513, 515
70005107 .....513, 515
70005108 .....73, 77
70005109 .....73, 78
70005139 117
70005140 661
70005141 661
70005142 .....645, 661
70005143 .....645, 661
70005144 .....645, 661
70005145 .....645, 661
70005146 661
70005147 645
70005148 645
70005149 645
70005150 663
70005151 663
70005152 663
70005153 663
70005154 663
70005171 281
70005172 281
70005173 281
70005174 281
70005176 282
70005177 282
70005180 282
70005181 282
70005182 282
70005183 282
70005184 282
70005185 282
70005186 282
70005188 282
70005189 282
70005191 283
70005203 86
70005204 86
70005217 .....73, 77
70005218 .....73, 77
70005219 .....74, 78
70005230 603
70005317 92
70005318 92
70005483 28
70005708 .....103, 107
70005710 101
70005711 101
70005712 101
70005713 101
70005714 101
70005715 101
70005716 101
70005724 .....74, 78
70005726 393
70005727 393
70005737 393
70005745 393
70005746 393
70005747 393
70005751 393
70005827 39
70005830 39
70005831 39
70005832 39
70005833 39
70005834 39
70006010 363
70006011 363
70006012 363
70006013 393
70006014 393
70006015 393
70006016 393
70006017 393
70006018 393
70006019 393
70006020 393
70006021 393
70006022 393
70006023 .....393, 928
70006024 393
70006025 393
70006026 393
70006027 393
70006028 393
70006029 393
70006030 393
70006031 393
70006032 393
70006033 393
70006034 393
70006035 393
70006036 393
70006037 393
70006038 393
70006039 393
70006040 393
70006041 393
70006042 393
70006043 393
70006044 393

70006045 394
70006046 394
70006047 394
70006048 394
70006049 394
70006050 394
70006051 394
70006052 394
70006053 394
70006054 394
70006055 394
70006056 394
70006057 394
70006058 394
70006059 394
70006060 394
70006061 ..... 394, 929
70006062 394
70006063 394
70006064 394
70006065 394
70006066 394
70006067 394
70006068 394
70006069 394
70006070 394
70006071 394
70006072 394
70006074 394
70006075 394
70006076 394
70006077 394
70006078 394
70006079 394
70006080 394
70006093 ..... 464, 472
70006094 ..... 464, 472
70006095 ..... 464, 472
70006096 ..... 464, 472
70006097 ..... 464, 472
70006104 ..477, 481, 483, 653
70006105 ..477, 481, 483, 653
70006255 513
70006270 513
70006344 669
70006356 ..211, 223, 235, 255, 269, 299, 323, 347, 377, 379
70006360 667
70006379 394
70006416 667
70006417 667
70006418 667
70006419 667
70006420 667
70006421 667
70006568 657
70006569 657
70006570 657
70006571 657
70006572 657
70006580 509
70006636 653
70006639 394
70006640 394
70006649 659
70006650 659
70006702 653
70006703 653
70006704 653
70006705 653
70006706 653
70006734 659
70006735 659
70006736 659
70006817 669
70006990 92
70006994 92
70006997 92
70006998 92
70006999 92
70007001 92
70007002 92
70007003 92
70007004 92
70007006 92
70007022 92
70007023 92
70007024 92
70007025 92
70007026 92
70007027 92
70007028 92
70007029 92
70007030 92
70007031 92
70007032 92
70007046 92
70007062 669
70007063 669
70007064 669
70007065 669
70007066 669
70007067 669
70007068 669
70007069 669
70007070 669
70007071 669
70007072 669
7000731 28
70009001 .. 287, 293, 311, 317
70009002 .. 208, 220, 231, 251, 266, 287, 293, 311, 317
70009003 .. 287, 293, 311, 317
70009004 ... 208, 220, 231
70009005 ... 208, 220, 231
70009006 .....251, 266
70009007 .....251, 266
70010383 ..... 69, 71, 928
7001481 402
7001909 86
7001911 86
7001912 86
7001931 86
7001985 86
7001998 .....27, 31
70022564 ... 645, 653, 661
70023369 ... 645, 653, 661
70023370 645
70023592 ....259, 273, 928
70023593 ....259, 273, 928
70023915 657
70024473 282
70024502 281
70024503 283
70024504 .....281, 283
70024507 283
70024512 283
70024513 281
70024904 281
70024905 281
70024906 281
70024910 282
70024912 282
70024913 282
70024914 282
70024915 282
70024917 283
70024918 283
70024920 .....281, 283
70024925 281
70024961 281
70025076 281
70025082 ....241, 245, 281
70025084 ...241, 242, 245, 246, 282
70025086 .....242, 246
70025088 ....241, 245, 281
70025091 ....241, 245, 281
70025101 281
70025109 282
70025111 282
70025113 283
70025115 282
70025120 283
70025121 .....242, 246
70025123 ...241, 242, 245, 246
70025131 ....242, 246, 282
70025133 282
70025135 281
70025139 .....241, 245
70025140 281
70025142 282
70025144 281
70025145 281
70025146 281
70025148 282
70025149 282
70025150 282
70025151 281
70025153 .....281, 928
70025154 281
70025159 282
70025160 281
70025161 .....281, 928
70025164 282
70025165 282
70025166 283
70025171 281
70025176 281
70025177 282
70025179 282
70025180 282
70025182 281
70025183 281
70025184 281
70025185 281
70025189 283
70025191 282
70025192 283
70025195 281
70025198 281
70025200 282
70025201 282
70025209 283
70025210 .....282, 929
70025211 283
70025213 283
70025214 283
70025215 282
70025216 282
70025217 283
70025218 283
70025219 283
70025220 283
70025221 .....282, 283
70025222 283
70025223 283
70025224 283
70025225 283
70025226 282
70025228 282
70025231 282
70025233 282
70025235 281
70025236 283
70025237 283
70025238 283
70025239 281
70025240 281
70025241 283
70025667 .....241, 245
70025693 .....242, 246
70025694 .....242, 246
70025779 282
70025781 282
70026444 39
7002821 936
7002822 936
7002823 936
7002828 936
7004043 87
7004044 87
7004275 936
7004276 936
70050795 653
7007289 402
7007415 .....401, 402
7007419 401
7007420 .....401, 402
7007437 .....35, 37
7007438 .....35, 37
7007439 .....35, 37
7007446 .....35, 37
7007489 399
7007493 402
7007495 401
7007601 .....27, 31
7007633 86
7007640 .....27, 31
7010103 399
7010104 399

SECTION 11 - SPECIAL OPTIONS

7010105 399
7010429 ..... 27, 31
7010474 86
7010543 81
7012513 ..... 423, 427, 431, 435
7012514 ..... 423, 428, 431, 435
7012518 ..... 665, 667, 669
7012558 ..... 423, 431
7012925 ..... 647, 649
7012941 81
7012967 ..... 81, 477, 481, 483
7012987 399
7012988 399
7012998 653
7016322 ..... 419, 421
7016331 ..... 241, 245, 281, 928
7016654 936
7017023 86
7017059 ..... 27, 31
7017067 ..... 27, 31
7017070 ..... 27, 31, 86
7017072 86
7017080 ..... 27, 31, 86
7017082 87
7017085 86
7017142 ..... 507, 509, 511
7017150 511
7017159 ..... 507, 509, 511
7017162 ..... 507, 509, 511
7017163 ..... 507, 509, 511
7017164 ..... 507, 509, 511
7017172 ..... 507, 509, 511
7017192 ..... 507, 509, 511
7017195 ..... 507, 509, 511
7017410 81
7017467 ..... 477, 481, 483, 653
7017496 39, 41, 477, 481, 647, 649, 651, 653
7017904 393
7017932 393
7017959 394
7017992 ..... 394, 928
7019680 ..... 423, 428, 431, 436
7020023 ..... 241, 245, 928
7020026 ..... 241, 245
7020033 33
7020035 33
7020036 33
7020037 33
7020038 33
7020039 33
7020040 33
7020041 33
7020108 ..... 423, 428, 431, 435
7020109 ..... 423, 428, 431, 435
7020110 ..... 423, 428, 431, 435
7020111 ..... 423, 428, 431, 436
7020175 .... 137, 143, 145, 149, 583, 587, 591, 595, 599
7020176 .... 137, 143, 145, 149, 583, 587, 591, 595, 599
7020190 .... 423, 428, 431, 436
7020403 ..... 241, 245
7020404 281
7020430 ..... 241, 245
7020460 ..... 241, 245
7020465 ..... 241, 245, 281
7020468 ..... 241, 245
7020471 ..... 242, 246
7020479 ..... 242, 246
7020492 .... 241, 242, 245, 246, 282
7021237 401
7021238 401
7021239 401
7021240 401
7021241 401
7021242 401
7021243 401
7021248 401
7021249 ..... 35, 37, 401
7021253 401
7021257 401
7021258 401
7021259 401
7021262 401
7021263 401
7021265 401
7021268 401
7021275 ..... 35, 37
7021276 ..... 35, 37, 402
7021277 ..... 35, 37, 402
7021278 402
7021281 401
7021290 402
7021293 401
7021299 402
7021625 41
7021639 41
7022300 401
7022302 ..... 35, 37
7022305 ..... 35, 37
7022310 37
7022311 ..... 35, 37
7022312 ..... 35, 37
7022314 ..... 35, 37
7022326 ..... 35, 37
7022328 ..... 35, 37
7022341 401
7022346 402
7022347 402
7022368 ..... 35, 37
7022371 ..... 35, 37
7022372 37
7022390 73, 77, 477, 481, 483, 653
7022397 ..... 39, 41
7022399 ..... 39, 41, 73, 77
7023154 393
7023900 ..... 73, 77
7023907 ..... 35, 37
7023908 ..... 35, 37
7023910 ..... 35, 37
7023936 ..... 73, 77
7024182 ..... 27, 28
7024189 28
7024190 28
7024191 28
7024192 28
7024193 28
7024194 28
7024196 28
7024197 28
7024379 87
7024380 87
7024381 87
7024389 87
7024390 87
7024441 ..... 103, 107, 111
7024453 87
7024458 87
7024462 639
7024463 639
7024467 639
7024469 639
7024470 639
7024471 639
7024472 639
7024473 639
7024474 639
7024475 639
7024478 639
7024485 ..... 455, 459, 464, 467
7024488 ..... 455, 459, 463, 467, 471
7024489 ..... 455, 459, 463, 467, 471
7024565 ..... 242, 246
7024579 ..... 241, 245, 281
7024598 ..... 419, 421
7024704 86
7024705 27
7024712 ..... 27, 31
7024713 ..... 27, 31
7024714 ..... 27, 31
7024715 ..... 27, 31
7024716 ..... 27, 31
7024717 27
7024718 28
7024743 86
7024763 86
7024784 87
7024800 401
7024810 39
7024853 35
7024854 ..... 35, 37
7024855 401
7024857 401
7024858 401
7024868 ..... 35, 37
7024881 ..... 39, 41
7024885 928
7026188 ..... 455, 459, 467
7026199 ..... 423, 427, 431, 435
7026330 117
7026503 101
7026504 101
7026597 .... 455, 459, 464, 467
7026626 .... 455, 459, 464, 467, 472
7027236 ..... 241, 245
7027419 35
7027773 639
7027774 639
7027775 639
7027776 639
7027777 639
7027778 639
7027779 639
7027780 639
7027790 ..... 242, 246
7027791 ..... 242, 246
7027792 ..... 242, 246
7027795 242
7027796 ..... 242, 246
7027799 .... 455, 459, 464, 467, 472
7027887 .... 423, 428, 431, 436
7027903 ..... 242, 246
7027965 .... 303, 307, 327, 331, 928
7027972 ..... 327, 331, 928
77363233 839
80484084 825
80633030 .. 678, 686, 694, 702, 710, 719, 728, 736, 744, 752, 760, 769
80934561 101
80963067 868
80983191 ..... 825, 928
82033995 .. 354, 360, 384, 390
8220045 ..... 837, 868
8220051 833
8220115 825
8220125 868
8220164 825
8229242 .... 825, 849, 868, 928
8229244 ..... 868, 928
8229245 ..... 837, 868
8305401 .... 214, 226, 238, 259, 273, 302, 306, 326, 330, 353, 358, 383, 388
8307109 .... 214, 226, 238, 259, 273, 302, 306, 326, 330, 353, 358, 383, 389
8310129 629
8310548 .... 214, 226, 238, 259, 273, 302, 306, 326, 330, 353, 358, 383, 389
8405006 ..... 251, 265, 279
8405007 .... 259, 273, 353, 383
8405009 .... 207, 219, 231, 259, 273, 302, 306, 326, 330, 353, 359, 383, 389

8405102 ....353, 359, 383, 389
8405103 ....302, 306, 326, 330
8405104 ....259, 273, 353, 359, 383, 389
8405201 ....302, 306, 326, 330
8405202 ....259, 273, 353, 359, 383, 389
8405203 ....302, 306, 326, 330, 353, 359, 383, 389
8405204 ..... 259, 273
8406101 .....251, 265
8406109 .... 215, 227, 239, 259, 273, 302, 306, 326, 330, 353, 359, 383, 389
8406110 .... 260, 274, 303, 307, 327, 331, 353, 359, 383, 389, 519, 527, 529, 531, 533, 535, 537
8406201 .... 260, 274, 353, 359, 383, 389
8410001 .....353, 359, 383, 389
8410009 .....302, 306, 326, 330, 353, 359, 383, 389
8410011 .....354, 360
8410013 .....251, 265, 326, 330
84521061 435
84521062 471
8750014 .....207, 219, 251, 265
8750031 .....207, 219, 251, 265
88411013 799
88521205 .....113, 115
88662037 .. 687, 694, 702, 710, 719, 737, 744, 752, 760, 769
90200755 .. 172, 176, 180, 192
91164057 ..... 41, 74, 78
91164059 .....74, 78
91164079 ..... 41, 74, 78
91203039 525
91401281 113
91554014 867

3121672

JLG®

An Oshkosh Corporation Company

Corporate Office
JLG Industries, Inc.
1 JLG Drive
McConnellsburg, PA 17233-9533 USA
(717) 485-5161 (Corporate)
(877) 554-5438 (Customer Support)
(717) 485-6417

Visit our website for JLG Worldwide Locations.
www.jlg.com