Illustrated Parts Manual

Model 1250AJP

PVC
2201

P/N
31219961

August 25, 2023 - Rev D

ANSI

CE

UK CA

AS/NZS

An Oshkosh Corporation Company

REVISION LOG

January 10, 2022 - A - Original Issue of Manual (Edited to B/M 1001261250 Revision P)
July 11, 2022 - B - Revised Manual (Edited to B/M 1001261250 Revision Q)
January 9, 2023 - C - Revised Manual (Edited to B/M 1001261250 Revision Q)
August 25, 2023 - D - Revised Manual (Edited to B/M 1001261250 Revision Q)

GENERAL INFORMATION

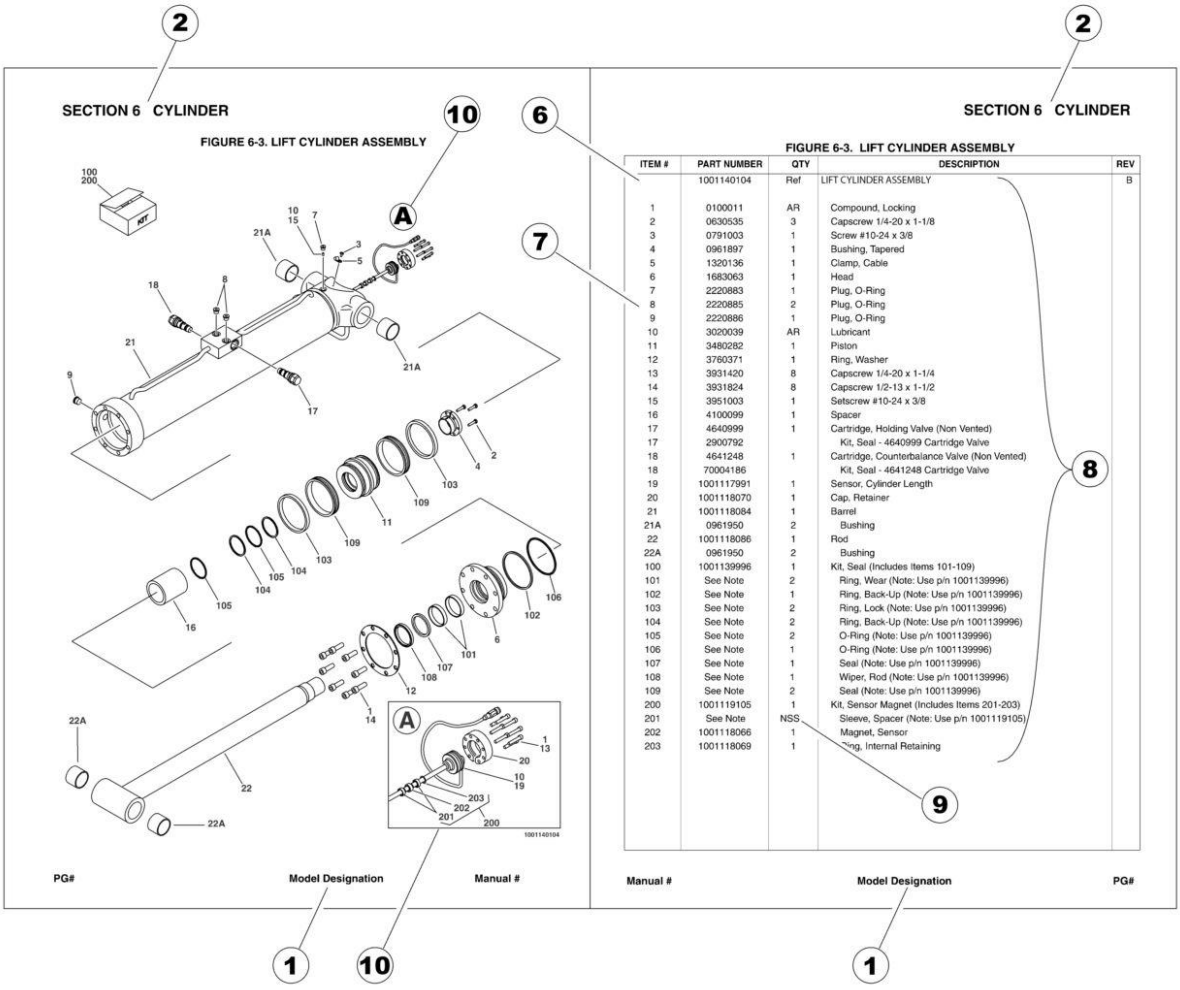

1) MACHINE IDENTIFICATION

Machines are identified by model and in some cases a combination of models, serial number (SN) or regional standard (i.e ANSI, CE,CSA). Components may also be identified by SN or manufacturer. Common components that may be identified by these characteristics are engines and hydraulic components.

2) PARTS MANUAL ORGANIZATION

Product information in this manual is organized under section titles. Frame, Cylinder, Hydraulic and Electrical are a few examples. Each section is organized by figure and page number. The information within the Figure is then organized by item number, part number, description and corresponding illustration (s).

3) TABLE OF CONTENTS (NOT SHOWN)

A table of contents is found toward the beginning of the manual. Figure number, description and page number are provided for quick reference to the page containing the related information.

4) RECOMMENDED SPARE PARTS (NOT SHOWN)

The Recommended Spare Parts List, located near the end of the manual, reference most frequently used maintenance parts.

5) PART NUMBER INDEX (NOT SHOWN)

A numerical index listing all part numbers and the corresponding page number(s) appears at the back of the manual.

GENERAL INFORMATION

6) NON-SERVICED PARTS

In some instances, it is necessary to display non-serviced parts, assemblies or installations. In the case of assemblies and installations there will be a Ref in the Qty. column. In case of parts that are not available for service within assemblies or components, there will be a NSS (Not Sold Separately) or NLA (No Longer Available) listed in the Qty. column of the manual.

7) PARTS LIST ITEM NUMBERS

Numbers shown in the item# column correspond to numbers used in the associated illustration (s). Item numbers which are missing from the sequence in the parts list are not used on that page.

8) INDENTED PARTS DESCRIPTION

An indented part description is included in the item under which it is indented.

9) ABBREVIATION AND SYMBOLS

AC..... Alternating Current
ADE.....Advanced Design Electronics
AG.....Agricultural
ANSI.....American National Standards Institute
AR.....As Required
ASSY..... Assembly
AUS.....Australia
AUX.....Auxiliary
AWG.....American Wire Gauge
B/M.....Bill of Material
CAC.....Charge Air Cooler
CE.....European Conformity
CCW.....Counter Clockwise
CM.....Centimeter
CW.....Clockwise
CSA.....Canadian Standards Association
CYL.....Cylinder
DIA.....Diameter
DC.....Direct Current
DEF.....Diesel Exhaust Fliud
EMS..... Emergency Stop
ENG.....Engine
FT(ft) .....Feet
GA(Ga).....Gauge
HRC.....High Rated Countries
HVAC.....Heating, Ventilating, and Air Conditioning
HYD.....Hydraulic
Hz.....Hertz
ID.....Inside Diameter
IN.....inches
ISO.....International Organization for Standards
JIC.....Joint Industry Council
KG.....Kilogram
L.....Liter
LB(LBS).....Pounds
LCD..... Liquid Crystal Display
LED..... .Light Emitting Diodes
LH.....Left Hand
LRC.....Low Rated Countries
LSS.....Load Sensing System
M(m).....Metric/Meter
MM(mm).....Milimeter
mA.....Miliamps
NLA.....No Longer Available
NPT..... National Pipe Threads
NSS.....Not Sold Separately
OD.....Outside Diameter
ORB..... O-Ring Boss
ORFS.....O-Ring Face Seal
OZ (oz).....Ounces
PG.....Page
PN.....Part Number
QT(qt.). .....Quarts
QTY.....Quantity
REF.....Reference
REV.....Revision Level
RH.....Right Hand
SAE.....Society of Automotive Engineers
SN..... ..Serial Number
SPEC(S).....Specifications
T/T.....Turntable
UGM.....Universal Ground Module
V.....Volts
W.....Watts
#.....Number

10) ILLUSTRATION REFERANCE LETTERS

When necessary, illustrations may contain reference letters that are intended to track information (i. e. hoses, harnesses) from one point to another or to track visual enlargement of components to show details that may be located in another area on the illustration.

Note: Due to continuous product improvements, JLG Industries, Inc. reserves the right to make specification changes without prior notification. Contact JLG Industries, Inc. for updated information.

TABLE OF CONTENTS

SECTION 1 - FRAME 17

FIGURE 1-1. AXLE INSTALLATION - FIXED 18
FIGURE 1-2. AXLE INSTALLATION - OSCILLATING 22
FIGURE 1-3. AXLE STOP BLOCKS INSTALLATION 26
FIGURE 1-4. STEER INSTALLATION 28
FIGURE 1-5. WHEEL DRIVE INSTALLATION - REGGIANA RIDUTTORI 30
FIGURE 1-6. DRIVE HUB AND MOTOR ASSEMBLY - REGGIANA RIDUTTORI 32
FIGURE 1-7. DRIVE HUB ASSEMBLY - REGGIANA RIDUTTORI 34
FIGURE 1-8. DRIVE MOTOR ASSEMBLY 38
FIGURE 1-9. TIRE AND WHEEL INSTALLATION - FOAM - FILLED 40
FIGURE 1-10. TIRE AND WHEEL INSTALLATION - SOLID 42
FIGURE 1-11. FRAME VALVES INSTALLATION 44
FIGURE 1-12. STEER VALVE ASSEMBLY 46
FIGURE 1-13. TRACTION VALVE ASSEMBLY 48
FIGURE 1-14. FRAME COVERS INSTALLATION 50

SECTION 2 - TURNTABLE 53

FIGURE 2-1. TURNTABLE VALVES INSTALLATION 54
FIGURE 2-2. MAIN VALVE ASSEMBLY 56
FIGURE 2-3. BATTERY AND AUXILIARY PUMP INSTALLATION - WITHOUT COLD WEATHER PLUS PACKAGE 60
FIGURE 2-4. BATTERY AND AUXILIARY PUMP INSTALLATION - WITH COLD WEATHER PLUS PACKAGE 62
FIGURE 2-5. AUXILIARY PUMP ASSEMBLY (WITHOUT COLD WEATHER PLUS PACKAGE) 64
FIGURE 2-6. AUXILIARY PUMP ASSEMBLY (WITH COLD WEATHER PLUS PACKAGE) 66
FIGURE 2-7. SWING DRIVE INSTALLATION 68
FIGURE 2-8. TURNTABLE BEARING AND LUBE INSTALLATION 70
FIGURE 2-9. TURNTABLE LOCK INSTALLATION 72
FIGURE 2-10. PINION SHIELD INSTALLATION 74
FIGURE 2-11. SWING MOTOR/HUB ASSEMBLY 76
FIGURE 2-12. ROTARY COUPLING AND COLLECTOR RING INSTALLATION (WITHOUT SN PLATE ON ROTARY COUPLING) 80
FIGURE 2-13. ROTARY COUPLING AND COLLECTOR RING INSTALLATION (WITH SN PLATE ON ROTARY COUPLING) 82
FIGURE 2-14. ROTARY COUPLING AND COLLECTOR RING ASSEMBLY (WITH SN PLATE ON ROTARY COUPLING) 84
FIGURE 2-15. TANK INSTALLATION 86
FIGURE 2-16. HYDRAULIC OIL COOLER INSTALLATION - DEUTZ TD2011 ENGINES WITH REXROTH PUMP (OPTIONAL) 88
FIGURE 2-17. HYDRAULIC OIL COOLER INSTALLATION - DEUTZ TD2011 ENGINES WITH SAUER PUMP (OPTIONAL) 90
FIGURE 2-18. HYDRAULIC OIL COOLER INSTALLATION - DEUTZ TCD2.9L4 ENGINES AND DEUTZ TCD2.9L4 (STAGE V) ENGINES REXROTH PUMP (OPTIONAL) 92
FIGURE 2-19. HYDRAULIC OIL COOLER INSTALLATION - DEUTZ TCD2.9L4 ENGINES AND DEUTZ TCD2.9L4 (STAGE V) ENGINES WITH SAUER PUMP (OPTIONAL) 94
FIGURE 2-20. GROUND CONTROL BOX INSTALLATION - DEUTZ TD2011 ENGINES WITH REXROTH PUMP (WITHOUT TOWER STOW) (ANSI EXPORT & AUSTRALIAN SPECS) 96
FIGURE 2-21. GROUND CONTROL BOX INSTALLATION - DEUTZ TD2011 ENGINES WITH REXROTH PUMP (WITH TOWER STOW) (ANSI EXPORT & AUSTRALIAN SPECS) 98
FIGURE 2-22. GROUND CONTROL BOX INSTALLATION - DEUTZ TD2011 ENGINES WITH SAUER PUMP (WITHOUT TOWER STOW) (ANSI EXPORT & AUSTRALIAN SPECS) 100
FIGURE 2-23. GROUND CONTROL BOX INSTALLATION - DEUTZ TD2011 ENGINES WITH SAUER PUMP (WITH TOWER STOW) (CE & UK CA SPECS) (LRC) 102

TABLE OF CONTENTS

FIGURE 2-24. GROUND CONTROL BOX INSTALLATION - DEUTZ TD2011 ENGINES WITH REXROTH PUMPS (WITHOUT TOWER STOW) (CE & UK CA SPECS) (LRC) 104

FIGURE 2-25. GROUND CONTROL BOX INSTALLATION - DEUTZ TD2011 ENGINES WITH REXROTH PUMP (WITH TOWER STOW) (ANSI EXPORT & AUSTRALIAN SPECS) 106

FIGURE 2-26. GROUND CONTROL BOX INSTALLATION - DEUTZ TD2011 ENGINES WITH SAUER PUMPS (WITHOUT TOWER STOW) (CE & UK CA SPECS) (LRC) 108

FIGURE 2-27. GROUND CONTROL BOX INSTALLATION - DEUTZ TD2011 ENGINES WITH SAUER PUMP (WITH TOWER STOW) (CE & UK CA SPECS) (LRC) 110

FIGURE 2-28. GROUND CONTROL BOX INSTALLATION - DEUTZ TCD2.9L4 ENGINES (WITHOUT TOWER STOW) (ALL SPECS EXCEPT AUSTRALIAN, CE & UK CA SPECS) 112

FIGURE 2-29. GROUND CONTROL BOX INSTALLATION - DEUTZ TCD2.9L4 ENGINES (WITH TOWER STOW) (ALL SPECS EXCEPT AUSTRALIAN, CE & UK CA SPECS). 114

FIGURE 2-30. GROUND CONTROL BOX INSTALLATION - DEUTZ TCD2.9L4 (STAGE V) ENGINES (WITHOUT TOWER STOW)(CE & UK CA SPECS) 116

FIGURE 2-31. GROUND CONTROL BOX INSTALLATION - DEUTZ TCD2.9L4 (STAGE V) ENGINES (WITH TOWER STOW)(CE & UK CA SPECS) 118

FIGURE 2-32. GROUND CONTROL ASSEMBLY - WITH DEUTZ TD2011 AND DEUTZ TCD2.9L4 ENGINES - WITH DIGITAL DISPLAY (WITHOUT TOWER STOW) (ALL SPECS EXCEPT CE & UK CA SPECS) 120

FIGURE 2-33. GROUND CONTROL ASSEMBLY - WITH DEUTZ TD2011 AND DEUTZ TCD2.9L4 ENGINES - WITH MECHANICAL HOUR METER (WITHOUT TOWER STOW) (ALL SPECS EXCEPT CE & UK CA SPECS) 124

FIGURE 2-34. GROUND CONTROL ASSEMBLY - WITH DEUTZ TD2011 AND DEUTZ TCD2.9L4 ENGINES - WITH DIGITAL DISPLAY (WITH TOWER STOW) (ALL SPECS EXCEPT CE & UK CA SPECS) 128

FIGURE 2-35. GROUND CONTROL ASSEMBLY - WITH DEUTZ TD2011 AND DEUTZ TCD2.9L4 ENGINES - WITH MECHANICAL HOUR METER (WITH TOWER STOW) (ALL SPECS EXCEPT CE & UK CA SPECS) 132

FIGURE 2-36. GROUND CONTROL ASSEMBLY - DEUTZ TD2011 ENGINES (WITHOUT TOWER STOW) (CE & UK CA SPECS) 136

FIGURE 2-37. GROUND CONTROL ASSEMBLY - DEUTZ TD2011 ENGINES (WITH TOWER STOW) (CE & UK CA SPECS) 140

FIGURE 2-38. GROUND CONTROL ASSEMBLY - DEUTZ TCD2.9L4 (STAGE V) (WITHOUT TOWER STOW) (CE & UK CA SPECS) 144

FIGURE 2-39. GROUND CONTROL ASSEMBLY - DEUTZ TCD2.9L4 (STAGE V) (WITH TOWER STOW) (CE & UK CA SPECS) 148

FIGURE 2-40. KEYSWITCH INSTALLATION 152

FIGURE 2-41. LIGHT PANEL INSTALLATION 154

FIGURE 2-42. ALARMS INSTALLATION 156

FIGURE 2-43. BACKUP ALARM (WHITE NOISE) INSTALLATION 158

FIGURE 2-44. BACKUP ALARM AMBIENT (WHITE NOISE) INSTALLATION 160

FIGURE 2-45. STROBE LIGHT INSTALLATION (AMBER) 162

FIGURE 2-46. STROBE LIGHT INSTALLATION (BLUE) 164

FIGURE 2-47. STROBE LIGHT INSTALLATION (RED) 166

FIGURE 2-48. ENGINE TRAY JACK INSTALLATION - DEUTZ TD2011 ENGINES 168

FIGURE 2-49. ENGINE TRAY JACK INSTALLATION - DEUTZ TCD2.9L4 ENGINES AND DEUTZ TCD2.9L4 (STAGE V) ENGINES 170

FIGURE 2-50. HOODS INSTALLATION - DEUTZ TD2011 ENGINES 172

FIGURE 2-51. HOODS INSTALLATION - DEUTZ TCD2.9L4 ENGINES 176

FIGURE 2-52. HOODS INSTALLATION - DEUTZ TCD2.9L4 (STAGE V) ENGINES 180

SECTION 3 - ENGINE 185

FIGURE 3-1. DEUTZ TD2011 ENGINE INSTALLATION - WITH REXROTH PUMP (WITHOUT GENERATOR AND WITHOUT COLD WEATHER PLUS PACKAGE) 186

FIGURE 3-2. DEUTZ TD2011 ENGINE ASSEMBLY - WITH REXROTH PUMP (WITHOUT GENERATOR AND WITHOUT COLD WEATHER PLUS PACKAGE) 190

FIGURE 3-3. DEUTZ TD2011 ENGINE INSTALLATION - WITH REXROTH PUMP (WITH GENERATOR AND WITHOUT COLD WEATHER PLUS PACKAGE) 194
FIGURE 3-4. DEUTZ TD2011 ENGINE ASSEMBLY - WITH REXROTH PUMP (WITH GENERATOR AND WITHOUT COLD WEATHER PLUS PACKAGE) 198
FIGURE 3-5. DEUTZ TD2011 ENGINE INSTALLATION - WITH REXROTH PUMP (WITH GENERATOR AND WITH COLD WEATHER PLUS PACKAGE) 202
FIGURE 3-6. DEUTZ TD2011 ENGINE ASSEMBLY - WITH REXROTH PUMP (WITH GENERATOR AND WITH COLD WEATHER PLUS PACKAGE) 206
FIGURE 3-7. DEUTZ TD2011 ENGINE INSTALLATION - WITH SAUER PUMP (WITHOUT GENERATOR AND WITHOUT COLD WEATHER PLUS PACKAGE) 210
FIGURE 3-8. DEUTZ TD2011 ENGINE ASSEMBLY - WITH SAUER PUMP (WITHOUT GENERATOR AND WITHOUT COLD WEATHER PLUS PACKAGE) 214
FIGURE 3-9. DEUTZ TD2011 ENGINE INSTALLATION - WITH SAUER PUMP (WITH GENERATOR AND WITHOUT COLD WEATHER PLUS PACKAGE) 218
FIGURE 3-10. DEUTZ TD2011 ENGINE ASSEMBLY - WITH SAUER PUMP (WITH GENERATOR AND WITHOUT COLD WEATHER PLUS PACKAGE) 222
FIGURE 3-11. DEUTZ TD2011 ENGINE INSTALLATION - WITH SAUER PUMP (WITH GENERATOR AND WITH COLD WEATHER PLUS PACKAGE) 226
FIGURE 3-12. DEUTZ TD2011 ENGINE ASSEMBLY - WITH SAUER PUMP (WITH GENERATOR AND WITH COLD WEATHER PLUS PACKAGE) 230
FIGURE 3-13. DEUTZ TD2011 ENGINE COMPONENTS 234
FIGURE 3-14. DEUTZ TCD2.9L4 ENGINE INSTALLATION - WITH REXROTH PUMP (WITHOUT COLD WEATHER PLUS PACKAGE) 238
FIGURE 3-15. DEUTZ TCD2.9L4 ENGINE SUB-ASSEMBLY - WITH REXROTH PUMP (WITHOUT COLD WEATHER PLUS PACKAGE) 242
FIGURE 3-16. DEUTZ TCD2.9L4 ENGINE ASSEMBLY - WITH REXROTH PUMP (WITHOUT COLD WEATHER PLUS PACKAGE) 244
FIGURE 3-17. DEUTZ TCD2.9L4 ENGINE INSTALLATION - WITH REXROTH PUMP (WITH COLD WEATHER PLUS PACKAGE) 250
FIGURE 3-18. DEUTZ TCD2.9L4 ENGINE SUB-ASSEMBLY - WITH REXROTH PUMP (WITH COLD WEATHER PLUS PACKAGE) 254
FIGURE 3-19. DEUTZ TCD2.9L4 ENGINE ASSEMBLY - WITH REXROTH PUMP (WITH COLD WEATHER PLUS PACKAGE) 256
FIGURE 3-20. DEUTZ TCD2.9L4 ENGINE INSTALLATION - WITH SAUER PUMPS (WITHOUT COLD WEATHER PLUS PACKAGE) 262
FIGURE 3-21. DEUTZ TCD2.9L4 ENGINE SUB-ASSEMBLY - WITH SAUER PUMP (WITHOUT COLD WEATHER PLUS PACKAGE) 266
FIGURE 3-22. DEUTZ TCD2.9L4 ENGINE ASSEMBLY - WITH SAUER PUMP (WITHOUT COLD WEATHER PLUS PACKAGE) 268
FIGURE 3-23. DEUTZ TCD2.9L4 ENGINE INSTALLATION - WITH SAUER PUMPS (WITH COLD WEATHER PLUS PACKAGE) 274
FIGURE 3-24. DEUTZ TCD2.9L4 ENGINE SUB-ASSEMBLY - WITH SAUER PUMPS (WITH COLD WEATHER PLUS PACKAGE) 278
FIGURE 3-25. DEUTZ TCD2.9L4 ENGINE ASSEMBLY - WITH SAUER PUMPS (WITH COLD WEATHER PLUS PACKAGE) 280
FIGURE 3-26. DEUTZ TCD2.9L4 ENGINE COMPONENTS 286
FIGURE 3-27. DEUTZ TCD2.9L4 (STAGE V) ENGINE INSTALLATION - WITH REXROTH PUMP (WITHOUT COLD WEATHER PLUS PACKAGE) 290
FIGURE 3-28. DEUTZ TCD2.9L4 (STAGE V) ENGINE SUB-ASSEMBLY - WITH REXROTH PUMP AND ABS HOODS (WITHOUT COLD WEATHER PLUS PACKAGE) 294
FIGURE 3-29. DEUTZ TCD2.9L4 (STAGE V) ENGINE INSTALLATION - WITH SAUER PUMP (WITHOUT COLD WEATHER PLUS PACKAGE) 296
FIGURE 3-30. DEUTZ TCD2.9L4 (STAGE V) ENGINE SUB-ASSEMBLY - WITH SAUER PUMP AND ABS HOODS (WITHOUT COLD WEATHER PLUS PACKAGE) 300

TABLE OF CONTENTS

FIGURE 3-31. DEUTZ TCD2.9L4 (STAGE V) ENGINE ASSEMBLY (WITHOUT COLD WEATHER PLUS PACKAGE) 302
FIGURE 3-32. DEUTZ TCD2.9L4 (STAGE V) ENGINE COMPONENTS 308
FIGURE 3-33. PUMP ASSEMBLY (REXROTH) (DEUTZ TD2011 ENGINES) 312
FIGURE 3-34. PUMP ASSEMBLY (REXROTH) (DEUTZ TCD2.9L4 ENGINES AND DEUTZ TCD2.9L4 (STAGE V) ENGINES) 318
FIGURE 3-35. PUMP ASSEMBLY (SAUER TANDEM) 324
FIGURE 3-36. PUMP ASSEMBLY (SAUER PISTON) 328
FIGURE 3-37. PUMP ASSEMBLY (SAUER GEAR) 332
FIGURE 3-38. PUMP COUPLING KIT 334
FIGURE 3-39. FUEL PUMP/FILTER BRACKET ASSEMBLY - DEUTZ TCD2.9L4 ENGINE AND DEUTZ TCD2.9L4 (STAGE V) ENGINE 336
FIGURE 3-40. BREATHER HEATER INST (DEUTZ TD2.9L4 ENGINES AND DEUTZ TCD2.9L4 (STAGE V) ENGINES) 338
FIGURE 3-41. WATER/FUEL SEPARATOR INSTALLATION - DEUTZ TD2011 ENGINE 340
FIGURE 3-42. SPARK ARRESTING CATALYTIC MUFFLER - DEUTZ TD2011 ENGINES (OPTIONAL) 342
FIGURE 3-43. 2500W GENERATOR INSTALLATION - DEUTZ TD2011 ENGINES (OPTIONAL) 344
FIGURE 3-44. 4000W GENERATOR INSTALLATION - 60HZ SPEC (DEUTZ TD2011 ENGINES) 348
FIGURE 3-45. 4000W GENERATOR INSTALLATION - 50HZ SPEC (DEUTZ TD2011 ENGINES) 352
FIGURE 3-46. 4000W GENERATOR INSTALLATION - 60HZ SPEC (DEUTZ TCD2.9L4 ENGINES) 354
FIGURE 3-47. 4000W GENERATOR INSTALLATION - 50HZ SPEC (DEUTZ TCD2.9L4 ENGINES AND DEUTZ TCD2.9L4 (STAGE V) ENGINES) 358
FIGURE 3-48. 7500W SKYPOWER GENERATOR INSTALLATION - 60HZ SPEC (DEUTZ TD2011 ENGINES) (OPTIONAL) .362
FIGURE 3-49. 7500W SKYPOWER GENERATOR INSTALLATION - 50HZ SPEC (DEUTZ TD2011 ENGINES) (OPTIONAL) .366
FIGURE 3-50. 7500W SKYPOWER GENERATOR INSTALLATION - 60HZ SPEC (DEUTZ TCD2.9L4 ENGINES) (OPTIONAL) 370
FIGURE 3-51. 7500W SKYPOWER GENERATOR INSTALLATION - 50HZ SPEC (DEUTZ TCD2.9L4 ENGINES AND DEUTZ TCD2.9L4 (STAGE V) ENGINES) (OPTIONAL) 374

SECTION 4 - BOOM 377

FIGURE 4-1. BOOM AND CYLINDER INSTALLATION - WITHOUT COLD WEATHER PLUS PACKAGE 378
FIGURE 4-2. BOOM AND CYLINDER INSTALLATION - WITH COLD WEATHER PLUS PACKAGE 382
FIGURE 4-3. TOWER BOOM ASSEMBLY 386
FIGURE 4-4. MAIN BOOM ASSEMBLY - WITHOUT COLD WEATHER PLUS PACKAGE 390
FIGURE 4-5. MAIN BOOM ASSEMBLY - WITH COLD WEATHER PLUS PACKAGE 394
FIGURE 4-6. PLATFORM ROTATE ASSEMBLY 398
FIGURE 4-7. JIB ROTATE ASSEMBLY 400
FIGURE 4-8. POWER TRACK AND BOOM CLAMPS INSTALLATION (TOWER BOOM) 402
FIGURE 4-9. POWER TRACK AND BOOM CLAMPS INSTALLATION (MAIN BOOM AND JIB) 404
FIGURE 4-10. BOOM SENSORS AND SWITCHES INSTALLATION 408
FIGURE 4-11. PLATFORM SUPPORT INSTALLATION 412
FIGURE 4-12. CONTROL VALVE INSTALLATION - PLATFORM 414
FIGURE 4-13. PLATFORM VALVE ASSEMBLY 416

SECTION 5 - PLATFORM 419

FIGURE 5-1. PLATFORM ASSEMBLY - 36IN X 6FT (91.5CM X 1.83M) WITH SWING GATE 420
FIGURE 5-2. PLATFORM ASSEMBLY - 36IN X 8FT (91.5CM X 2.44M) WITH SWING GATE 422
FIGURE 5-3. PLATFORM ASSEMBLY - 30IN X 3FT (76CM X .91M) - WITH DROP BAR 424
FIGURE 5-4. PLATFORM ASSEMBLY - 36IN X 6FT (91.5CM X 1.83M) WITH DROP BAR 426
FIGURE 5-5. PLATFORM ASSEMBLY - 36IN X 8FT (91.5CM X 2.44M) WITH DROP BAR 428

FIGURE 5-6. PLATFORM ASSEMBLY - 36IN X 6FT (91.5CM X 1.83M) WITH FALL ARREST (ANSI AND ANSI EXPORT SPECS) 430
FIGURE 5-7. PLATFORM ASSEMBLY - 36IN X 8FT (91.5CM X 2.44M) WITH FALL ARREST (ANSI AND CSA SPECS) 432
FIGURE 5-8. PLATFORM ASSEMBLY - 36IN X 6FT (91.5CM X 1.83M) TRI-ENTRY WITH SWING GATE 434
FIGURE 5-9. PLATFORM ASSEMBLY - 36IN X 6FT (91.5CM X 1.83M) TRI-ENTRY WITH DROP BAR 436
FIGURE 5-10. PLATFORM ASSEMBLY - 36IN X 8FT (91.5CM X 2.44M) TRI-ENTRY WITH DROPBAR 438
FIGURE 5-11. PLATFORM ASSEMBLY - 36IN X 8FT (91.5CM X 2.44M) TRI-ENTRY WITH DROPGATE 440
FIGURE 5-12. TRAY INSTALLATION 442
FIGURE 5-13. PLATFORM CONTROLS INSTALLATION (WITHOUT TOWER STOW) 444
FIGURE 5-14. PLATFORM CONTROLS INSTALLATION (WITH TOWER STOW) 446
FIGURE 5-15. PLATFORM CONSOLE ASSEMBLY (WITHOUT TOWER STOW) 448
FIGURE 5-16. PLATFORM CONSOLE ASSEMBLY (WITH TOWER STOW) 452
FIGURE 5-17. LIGHT PANEL INSTALLATION 456
FIGURE 5-18. CONTROLLER ASSEMBLY (LIFT AND SWING) 458
FIGURE 5-19. CONTROLLER ASSEMBLY (DRIVE AND STEER) 462
FIGURE 5-20. TOWER LIFT SWITCH INSTALLATION 464
FIGURE 5-21. FOOTSWITCH ASSEMBLY 466
FIGURE 5-22. SKYEYE INSTALLATION 468
FIGURE 5-23. SKYGUARD BAR INSTALLATION 470
FIGURE 5-24. SKYLINE INSTALLATION 472
FIGURE 5-25. USB CHARGER INSTALLATION 474
FIGURE 5-26. SOFT TOUCH SYSTEM INSTALLATION - 6FT/1.8M PLATFORMS (OPTIONAL) 476
FIGURE 5-27. SOFT TOUCH SYSTEM INSTALLATION - 6FT/1.83M FALL ARREST PLATFORM 478
FIGURE 5-28. SOFT TOUCH SYSTEM INSTALLATION - 8FT/2.4M PLATFORMS (OPTIONAL) 480
FIGURE 5-29. SKYGLAZIER INSTALLATION (ANSI, AUSTRALIAN AND CSA SPECS) 482
FIGURE 5-30. SKYGLAZIER INSTALLATION (BRAZIL SPECS) 484
FIGURE 5-31. SKYGLAZIER INSTALLATION (DANISH SPECS) 486
FIGURE 5-32. SKYGLAZIER INSTALLATION (FRENCH SPECS) 488
FIGURE 5-33. SKYGLAZIER INSTALLATION (GERMAN SPECS) 490
FIGURE 5-34. SKYGLAZIER INSTALLATION (ITALIAN SPECS) 492
FIGURE 5-35. SKYGLAZIER INSTALLATION (LATIN AMERICAN SPECS) 494
FIGURE 5-36. SKYGLAZIER INSTALLATION (PORTUGUESE SPECS) 496
FIGURE 5-37. SKYGLAZIER INSTALLATION (SPANISH SPECS) 498
FIGURE 5-38. SKYGLAZIER INSTALLATION (SWEDISH SPECS) 500
FIGURE 5-39. SKYGLAZIER INSTALLATION (UK SPECS) 502
FIGURE 5-40. SKYCUTTER INSTALLATION 504
FIGURE 5-41. SKYWELDER/SKYCUTTER COMBO INSTALLATION (60HZ) 506
FIGURE 5-42. PLASMA CUTTER ASSEMBLY 510
FIGURE 5-43. SKYWELDER INSTALLATION (50HZ) 512
FIGURE 5-44. SKYWELDER INSTALLATION (60HZ) 514
FIGURE 5-45. SKYWELDER PREP PACKAGE (60HZ) 516
FIGURE 5-46. WELDER ASSEMBLY 518
FIGURE 5-47. FALL ARREST INSTALLATION (BOLT - ON EXTERNAL) 6FT/1.82M PLATFORM 520
FIGURE 5-48. FALL ARREST INSTALLATION (BOLT - ON EXTERNAL) 6FT/1.82M PLATFORM 522
FIGURE 5-49. FALL ARREST INSTALLATION (BOLT - ON EXTERNAL) 8FT/2.4M PLATFORM 524

TABLE OF CONTENTS

SECTION 6 - CYLINDER....527

FIGURE 6-1. AXLE EXTENSION CYLINDER ASSEMBLY....528

FIGURE 6-2. AXLE LOCKOUT CYLINDER ASSEMBLY (Prior to SN 0300294726, Except SN 0300285461 through 0300285462, Except SN 0300280457 through 0300290458)....530

FIGURE 6-3. AXLE LOCKOUT CYLINDER ASSMBLY (SN 0300294726 to Present)....532

FIGURE 6-4. PLATFORM LEVEL CYLINDER ASSEMBLY - WITHOUT COLD WEATHER PLUS PACKAGE....534

FIGURE 6-5. LIFT CYLINDER ASSEMBLY - MAIN BOOM....536

FIGURE 6-6. LIFT CYLINDER ASSEMBLY - TOWER BOOM....538

FIGURE 6-7. JIB CYLINDER ASSEMBLY (Prior to SN 0300293914, Except SN 0300285459 through 0300285462, Except SN 0300285780 through 0300285783, Except SN 0300289542 through 0300289544, Except SN 0300289548 through 0300289549, Except SN 0300289565 through 0300289568, Except SN 0300289596 through 0300289567, Except SN 0300290457 through 0300290458, Excluding 0300289527, 0300289551, 0300289589, 0300289601 and 0300289604)....540

FIGURE 6-8. JIB CYLINDER ASSEMBLY (SN 0300293914 to Present)....542

FIGURE 6-9. STEER CYLINDER ASSEMBLY (Prior to SN 0300293914, Except SN 0300285459 through 0300285462, Except SN 0300285780 through 0300285783, Except SN 0300289542 through 0300289544, Except SN 0300289548 through 0300289549, Except SN 0300289565 through 0300289568, Except SN 0300289596 through 0300289567, Except SN 0300290457 through 0300290458, Excluding 0300289527, 0300289551, 0300289589, 0300289601 and 0300289604)....544

FIGURE 6-10. STEER CYLINDER ASSEMBLY (SN 0300293914 to Present)....546

FIGURE 6-11. TELESCOPE CYLINDER ASSEMBLY - MAIN BOOM....548

FIGURE 6-12. TELESCOPE CYLINDER ASSEMBLY - TOWER BOOM....550

SECTION 7 - HYDRAULIC....553

FIGURE 7-1. HYDRAULIC DIAGRAM - BOOM (WITH REXROTH PUMPS)....554

FIGURE 7-2. HYDRAULIC DIAGRAM - BOOM (WITH SAUER PUMPS)....558

FIGURE 7-3. HYDRAULIC DIAGRAM - DRIVE (WITH REXROTH PUMPS)....562

FIGURE 7-4. HYDRAULIC DIAGRAM - DRIVE (WITH SAUER PUMPS)....566

FIGURE 7-5. HYDRAULIC DIAGRAM - OSCILLATING AXLE (WITH REXROTH PUMPS)....570

FIGURE 7-6. HYDRAULIC DIAGRAM - OSCILLATING AXLE (WITH SAUER PUMPS)....572

FIGURE 7-7. HYDRAULIC DIAGRAM - STEER (WITH REXROTH PUMPS)....574

FIGURE 7-8. HYDRAULIC DIAGRAM - STEER (WITH SAUER PUMPS)....576

FIGURE 7-9. HYDRAULIC DIAGRAM - TURNTABLE (DEUTZ TD2011 ENGINES WITH REXROTH PUMPS)....578

FIGURE 7-10. HYDRAULIC DIAGRAM - TURNTABLE (DEUTZ TCD2.9L4 ENGINES AND DEUTZ TCD2.9L4 (STAGE V) ENGINES WITH REXROTH PUMPS)....582

FIGURE 7-11. HYDRAULIC DIAGRAM - TURNTABLE (WITH SAUER PUMPS)....586

FIGURE 7-12. HYDRAULIC DIAGRAM - AUXILIARY POWER MOTOR....590

SECTION 8 - ELECTRICAL....593

FIGURE 8-1. AC BOX AT PLATFORM - 110V GFI RECEPTACLE (ANSI SPECS)....594

FIGURE 8-2. AC BOX AT PLATFORM - 220V GFI RECEPTACLE (ANSI SPECS)....596

FIGURE 8-3. AC BOX AT PLATFORM INSTALLATION - BOX WITH COVER (2X4 BOX) WITH 4000W GENERATOR (ANSI EXPORT, AUSTRALIAN, JAPANESE, CE & UK CA SPECS)....598

FIGURE 8-4. AC BOX AT PLATFORM INSTALLATION - 110V IEC 60309 YELLOW WITHOUT 2500W GENERATOR (CE & UK CA SPECS)....600

FIGURE 8-5. AC BOX AT PLATFORM INSTALLATION - 110V IEC 60309 YELLOW WITH 2500W GENERATOR (CE & UK CA SPECS)....602

FIGURE 8-6. AC BOX AT PLATFORM INSTALLATION - 110V IEC 60309 YELLOW WITH 4000W GENERATOR (CE & UK CA SPECS)....604

FIGURE 8-7. AC BOX AT PLATFORM INSTALLATION - 220V IEC 60309 BLUE WITHOUT 2500W GENERATOR (CE & UK CA SPECS)....606

FIGURE 8-8. AC BOX AT PLATFORM INSTALLATION - 220V IEC 60309 BLUE WITH 2500W GENERATOR (CE & UK CA SPECS) 608
FIGURE 8-9. AC BOX AT PLATFORM INSTALLATION - 220V IEC 60309 BLUE WITH 4000W GENERATOR (CE & UK CA SPECS) 610
FIGURE 8-10. AC BOX AT PLATFORM INSTALLATION - 220V CEE7 POST GROUND (2X4 BOX) WITHOUT 2500W GENERATOR (CE & UK CA SPECS) 612
FIGURE 8-11. AC BOX AT PLATFORM INSTALLATION - 220V CEE7 POST GROUND (2X4 BOX) WITH 2500W GENERATOR (CE & UK CA SPECS) 614
FIGURE 8-12. AC BOX AT PLATFORM INSTALLATION - 220V CEE7 POST GROUND (2X4 BOX) WITH 4000W GENERATOR (CE & UK CA SPECS) 616
FIGURE 8-13. AC BOX AT PLATFORM INSTALLATION - 220V CEE7 SIDE GROUND (2X4 BOX) WITHOUT 2500W GENERATOR (CE & UK CA SPECS) 618
FIGURE 8-14. AC BOX AT PLATFORM INSTALLATION - 220V CEE7 SIDE GROUND (2X4 BOX) WITH 2500W GENERATOR (CE & UK CA SPECS) 620
FIGURE 8-15. AC BOX AT PLATFORM INSTALLATION - 220V CEE7 SIDE GROUND (2X4 BOX) WITH 4000W GENERATOR (CE & UK CA SPECS) 622
FIGURE 8-16. AC BOX AT PLATFORM INSTALLATION - 220V AFSINT 107 KEYED GROUND (2X4 BOX) WITHOUT 2500W GENERATOR (CE & UK CA SPECS) 624
FIGURE 8-17. AC BOX AT PLATFORM INSTALLATION - 220V AFSINT 107 KEYED GROUND (2X4 BOX) WITH 2500W GENERATOR (CE & UK CA SPECS) 626
FIGURE 8-18. AC BOX AT PLATFORM INSTALLATION - 220V AFSINT 107 KEYED GROUND (2X4 BOX) WITH 4000W GENERATOR (CE & UK CA SPECS) 628
FIGURE 8-19. AC BOX AT PLATFORM INSTALLATION - 240V (WITH 4000W GENERATOR) (ALL SPECS EXCEPT AUSTRALIAN & CE & UK CA SPECS) 630
FIGURE 8-20. AC BOX AT PLATFORM INSTALLATION - 240V (WITH 7500W SKYPOWER GENERATOR) (ALL SPECS EXCEPT AUSTRALIAN, CE & UK CA SPECS) 632
FIGURE 8-21. AC LEAD INSTALLATION (ANSI EXPORT, AUSTRALIAN, CE & UK CA SPECS) 634
FIGURE 8-22. AC 10 AMP BREAKER BOX INSTALLATION (CE & UK CA SPECS) 636
FIGURE 8-23. AC 16 AMP BREAKER BOX INSTALLATION (CE & UK CA SPECS) 638
FIGURE 8-24. ANALYZER CALBE HARNESS 640
FIGURE 8-25. AXLE POWER TRACK HARNESS ASSEMBLY 642
FIGURE 8-26. BATTERY DISCONNECT INSTALLATION 644
FIGURE 8-27. BEACON LIGHT HARNESS 646
FIGURE 8-28. B.L.A.M. HARNESS 648
FIGURE 8-29. BOOM CABLE INSTALLATION (ANSI, ANSI EXPORT AND JAPANESE SPECS) 650
FIGURE 8-30. BOOM CABLE INSTALLATION (AUSTRALIAN, CE & UK CA SPECS) 652
FIGURE 8-31. BOOM CABLE INSTALLATION - 4000W 60HZ GENERATOR 654
FIGURE 8-32. BOOM CABLE INSTALLATION - 4000W 50HZ GENERATOR 656
FIGURE 8-33. BOOM CABLE INSTALLATION - 7500W GENERATOR 658
FIGURE 8-34. BREAKER BOX KIT - 10 AMP (2500W GENERATOR) 660
FIGURE 8-35. BREAKER BOX KIT - 16 AMP (2500W GENERATOR) 662
FIGURE 8-36. BREAKER BOX KIT - 16 AMP (4000W GENERATOR) 664
FIGURE 8-37. BREAKER BOX KIT - 30MA/16 AMP (WITHOUT GENERATOR) 666
FIGURE 8-38. CHASSIS POWER DISTRIBUTION HARNESS 668
FIGURE 8-39. CHASSIS HARNESS ASSEMBLY 670
FIGURE 8-40. CLEARSKY READY HARNESS (DEUTZ TD2011, DEUTZ TCD2.9L4 & DEUTZ TCD2.9L4 (STAGE V PRE-BUY) ENGINES 672
FIGURE 8-41. (CLEARSKY READY HARNESS (DEUTZ TCD2.9L4 (STAGE V) ENGINES) 674
FIGURE 8-42. DUAL CAPACITY JIB POSITION SWITCH HARNESS 676
FIGURE 8-43. ENGINE HARNESS - DEUTZ TD2011 ENGINES 678

TABLE OF CONTENTS

FIGURE 8-44. ENGINE HARNESS - DEUTZ TCD2.9L4 ENGINES AND DEUTZ TCD2.9L4 (STAGE V PRE-BUY) ENGINES..680
FIGURE 8-45. ENGINE HARNESS - DEUTZ TCD2.9L4 ENGINES AND DEUTZ TCD2.9L4 (STAGE V) ENGINES 684
FIGURE 8-46. FUEL FILTER HARNESS - DEUTZ TCD2.9L4 ENGINES AND DEUTZ TCD2.9L4 (STAGE V) ENGINES..... 688
FIGURE 8-47. FUEL HARNESS - DEUTZ TCD2.9L4 ENGINES, DEUTZ TCD2.9L4 (STAGE V PRE-BUY) ENGINES AND DEUTZ TCD2.9L4 (STAGE V) ENGINES 690
FIGURE 8-48. GENERATOR HARNESS - 4000W GENERATOR 692
FIGURE 8-49. GENERATOR CABLE HARNESS - 7500W GENERATOR..... 694
FIGURE 8-50. GROUND CONTROL BOX HARNESS 696
FIGURE 8-51. GROUND CONTROLS TO ENGINE HARNESS..... 700
FIGURE 8-52. JIB STOW SWITCH HARNESS 702
FIGURE 8-53. LOAD SENSING PIN HARNESS 704
FIGURE 8-54. LOCKOUT VALVE HARNESS 706
FIGURE 8-55. MAIN BOOM CONTROL CABLE HARNESS 708
FIGURE 8-56. MAIN BOOM DUAL CAPACITY SWITCH HARNESS..... 710
FIGURE 8-57. MAIN BOOM TRANSPORT SWITCH HARNESS 712
FIGURE 8-58. MAIN VALVE HARNESS..... 714
FIGURE 8-59. PLATFORM CONSOLE BOX HARNESS - WITH SKYGUARD 716
FIGURE 8-60. SKYGUARD INERFACE HARNESS 720
FIGURE 8-61. PLATFORM VALVE HARNESS 722
FIGURE 8-62. PRESSURE TRANSDUCER HARNESS..... 724
FIGURE 8-63. PRESSURE TRANSDUCER HARNESS..... 726
FIGURE 8-64. PUMP ADAPTER HARNESS - SAUER PUMPS..... 728
FIGURE 8-65. RECEPTACLE BOX KIT - 110V IEC YELLOW WITHOUT 2500W GENERATOR (CE & UK CA SPECS) 730
FIGURE 8-66. RECEPTACLE BOX KIT - 110V IEC YELLOW WITH 2500W GENERATOR (CE & UK CA SPECS) 732
FIGURE 8-67. RECEPTACLE BOX KIT - 220V IEC BLUE WITHOUT 2500W GENERATOR (CE & UK CA SPECS) 734
FIGURE 8-68. RECEPTACLE BOX KIT - 220V IEC BLUE WITH 2500W GENERATOR (CE & UK CA SPECS) 736
FIGURE 8-69. RECEPTACLE BOX KIT - 220V CEE7 POST GROUND WITHOUT 2500W GENERSTOR (2X4 BOX) (CE & UK CA SPECS)..... 738
FIGURE 8-70. RECEPTACLE BOX KIT - 220V CEE7 POST GROUND WITH 2500W GENERSTOR (2X4 BOX) (CE & UK CA SPECS)..... 740
FIGURE 8-71. RECEPTACLE BOX KIT - 220V CEE7 SIDE GROUND WITHOUT 2500W GENERATOR (2X4 BOX) (CE & UK CA SPECS)..... 742
FIGURE 8-72. RECEPTACLE BOX KIT - 220V CEE7 SIDE GROUND WITH 2500W GENERATOR (2X4 BOX) (CE & UK CA SPECS)..... 744
FIGURE 8-73. RECEPTACLE BOX KIT - 220V AFSINT 107 KEYED GROUND WITHOUT 2500W GENERATOR (2X4 BOX) (CE & UK CA SPECS)..... 746
FIGURE 8-74. RECEPTACLE BOX KIT - 220V AFSINT 107 KEYED GROUND WITH 2500W GENERATOR (2X4 BOX) (CE & UK CA SPECS)..... 748
FIGURE 8-75. RELAY HARNESS..... 750
FIGURE 8-76. STROBE LIGHT HARNESS (AMBER)..... 752
FIGURE 8-77. TILT SENSOR HARNESS (LEFT)..... 754
FIGURE 8-78. TILT SENSOR HARNESS (RIGHT) 756
FIGURE 8-79. TOWER BOOM ANGLE SENSOR HARNESS (LEFT)..... 758
FIGURE 8-80. TOWER BOOM ANGLE SENSOR HARNESS (RIGHT) 760
FIGURE 8-81. TOWER BOOM CONTROL CABLE HARNESS..... 762
FIGURE 8-82. TOWER BOOM FLY TO GROUND CONTROL BOX HARNESS..... 764
FIGURE 8-83. TOWER BOOM FLY TO MAIN BOOM BASE HARNESS 766
FIGURE 8-84. TOWER BOOM LENGTH SENSORS HARNESS 768

FIGURE 8-85. TOWER BOOM TRANSPORT LENGTH SWITCH HARNESS 770
FIGURE 8-86. SKYEYE INTERMEDIATE HARNESS 772
FIGURE 8-87. SKYEYE RECEIVER HARNESS 774
FIGURE 8-88. SKYEYE EMITTER HARNESS 776
FIGURE 8-89. SKYLINE HARNESS 778

SECTION 9 - DECALS 781

FIGURE 9-1. DECAL INSTALLATION - ANSI SPEC 782
FIGURE 9-2. DECAL INSTALLATION - AUSTRALIAN SPEC 784
FIGURE 9-3. DECAL INSTALLATION - BRAZIL SPEC (PORTGUESE/ENGLISH) 786
FIGURE 9-4. DECAL INSTALLATION - CE & UK CA SPEC 788
FIGURE 9-5. DECAL INSTALLATION - CHINESE SPEC (CHINESE/ENGLISH) 790
FIGURE 9-6. DECAL INSTALLATION - CSA SPEC (ENGLISH/FRENCH) 792
FIGURE 9-7. DECAL INSTALLATION - JAPANESE SPEC (JAPANESE/ENGLISH) 794
FIGURE 9-8. DECAL INSTALLATION - KOREAN SPEC (KOREAN/ENGLISH) 796
FIGURE 9-9. DECAL INSTALLATION - LATIN AMERICAN SPEC (SPANISH/ENGLISH) 798
FIGURE 9-10. DECAL INSTALLATION - OPTIONS 800
FIGURE 9-11. SKYWELDER DECAL INSTALLATION - 50HZ 804
FIGURE 9-12. SKYWELDER DECAL INSTALLATION - 60HZ (PVC 2001) 806
FIGURE 9-13. SKYWELDER DECAL INSTALLATION - 60HZ (PVC 2007) 808

SECTION 10 - RECOMMENDED SERVICE PARTS STOCK 811

FIGURE 10-1. RECOMMENDED SERVICE PARTS 812

SECTION 11 - SPECIAL OPTIONS/ACCESSORIES/KITS 815

FIGURE 11-1. SPECIAL OPTIONS/ACCESSORIES/KITS 816

PART NUMBER INDEX 821

SECTION 1 - FRAME

SECTION 1 - FRAME

FIGURE 1-1. AXLE INSTALLATION - FIXED

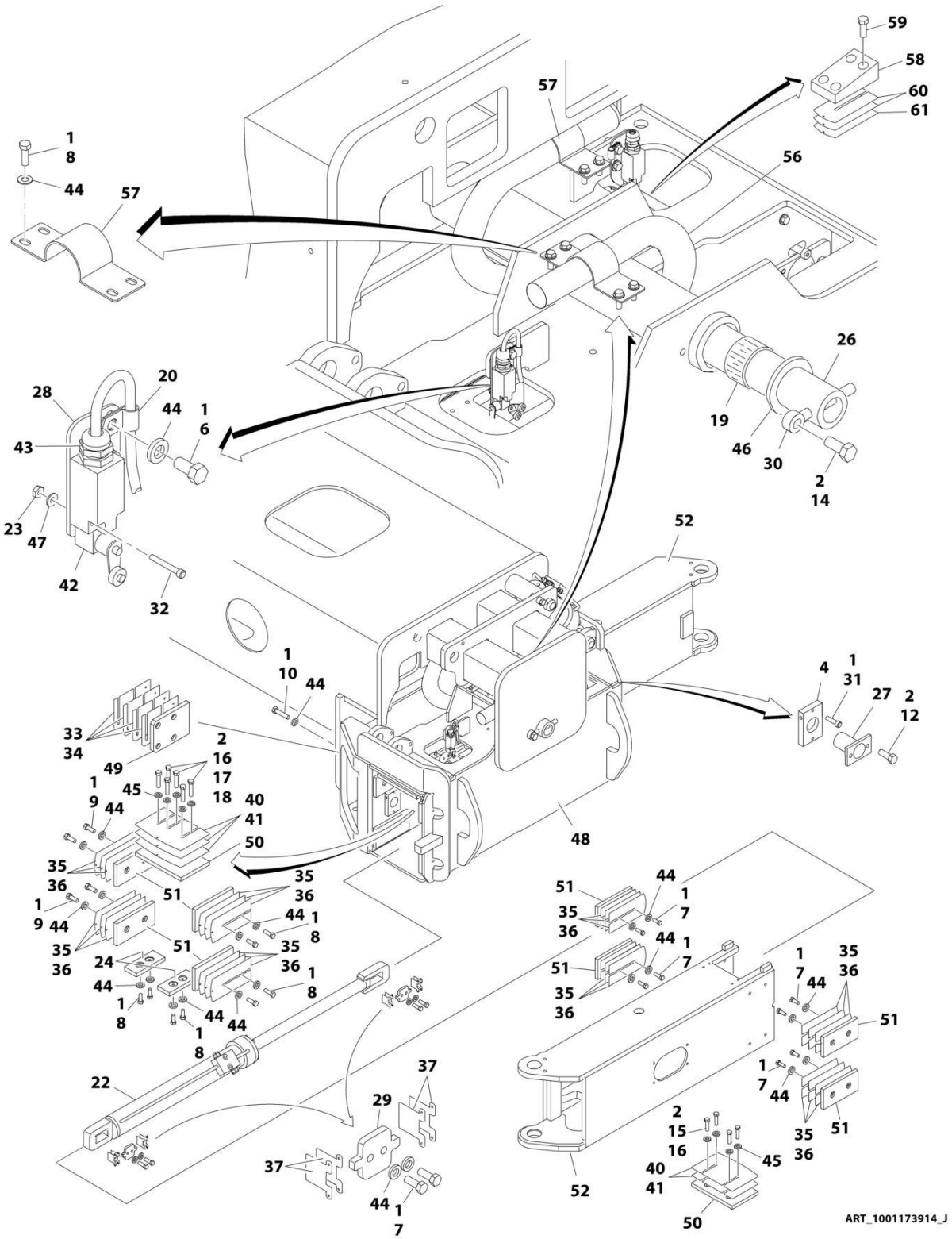

FIGURE 1-1. AXLE INSTALLATION - FIXED

ITEM	PART NUMBER	QTY	DESCRIPTION	REV
	1001173914	Ref	AXLE INSTALLATION - FIXED	J
1	0100011	AR	Compound, Locking	
2	0100019	AR	Compound, Locking	
4	0363037	4	Bar, Stop	
6	0641606	8	Bolt 3/8 x 3/4	
7	0641608	48	Bolt 3/8 x 1	
8	0641609	64	Bolt 3/8 x 1-1/8	
9	0641611	16	Bolt 3/8 x 1-3/8	
10	0641613	8	Bolt 3/8 x 1-5/8	
12	0641808	8	Bolt 1/2 x 1	
14	0642214	1	Bolt 3/4 x 1-3/4	
15	0681813	12	Bolt 1/2 x 1-5/8 Grade 8	
16	0681814	18	Bolt 1/2 x 1-3/4 Grade 8	
17	0681815	12	Bolt 1/2 x 1-7/8 Grade 8	
18	0681816	6	Bolt 1/2 x 2 Grade 8	
19	0962033	2	Bushing	
20	1320263	4	Clamp, Cable	
22	1001251020	4	Axle Extension Cylinder Assembly (See Separate Breakdown in CYLINDER SECTION)	
23	3310805	8	Nut #8	
24	3340881	8	Pad, Wear	
26	3422918	1	Pin	
27	3422960	4	Pin	
28	3573294	4	Plate	
29	3573335	8	Plate	
30	3841287	1	Keeper, Pin	
31	3900270	4	Bolt 1/2 x 1-1/2	
32	3930820	8	Capscrew #8 x 1-1/4	
33	4071035	2	Shim #18 Gauge	
34	4071036	4	Shim #11 Gauge	
35	4071039	10	Shim #18 Gauge	
36	4071040	36	Shim #11 Gauge	
37	4071042	24	Shim #16 Gauge	
40	4071054	8	Shim #18 Gauge	
41	4071055	12	Shim #11 Gauge	
42	4360578	4	Switch, Limit	
43	4460968	4	Connector, Strain Relief	
44	4711600	144	Washer 3/8	
45	4711800	48	Washer 1/2	
46	4740461	1	Thrustwasher	
47	4750800	8	Washer #8	
48	4846383	1	Box, Axle Pivot	
49	1001161401	2	Pad, Axle	
50	1001161402	8	Pad, Wear	
51	1001161403	32	Pad, Wear	
52	4846637	4	Extension, Axle	
55	4240155	6	Strap (Not Shown)	
56	1001193674	4	Sleeve, Nylon	
57	1001191541	8	Bracket, Hose Mount	
58	0363076	2	Bar	

SECTION 1 - FRAME

ITEM	PART NUMBER	QTY	DESCRIPTION	REV
59	0641814	4	Bolt 1/2 x 1-3/4	
60	4071049	4	Shim #11 Gauge	
61	4071050	2	Shim #16 Gauge	
62	2220235	1	Plug (Not Shown - Located on Junction Manifold)	

FIGURE 1-2. AXLE INSTALLATION - OSCILLATING

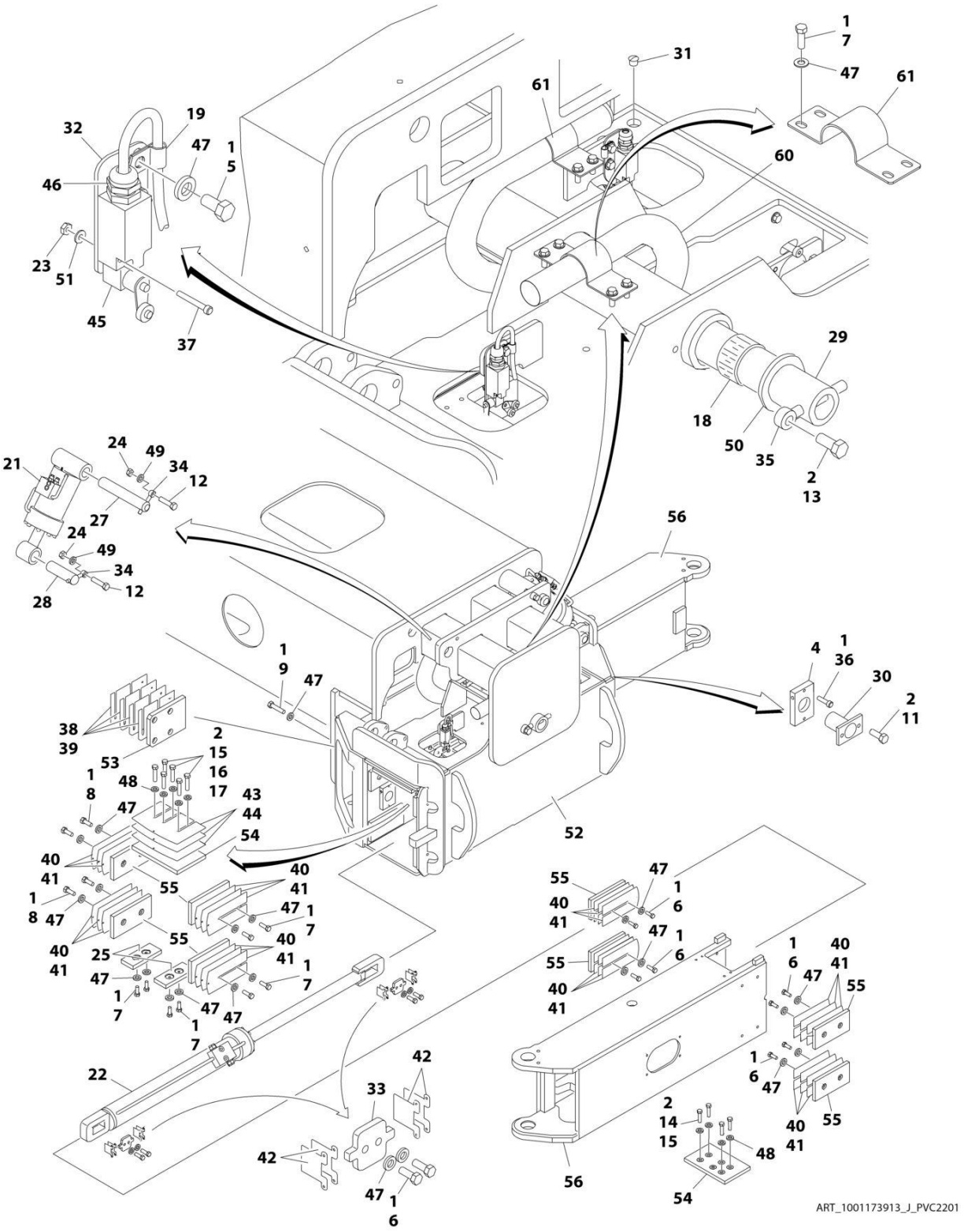

FIGURE 1-2. AXLE INSTALLATION - OSCILLATING

ITEM	PART NUMBER	QTY	DESCRIPTION	REV
	1001173913	Ref	AXLE INSTALLATION - OSCILLATING	J
1	0100011	AR	Compound, Locking	
2	0100019	AR	Compound, Locking	
4	0363037	4	Bar, Stop	
5	0641606	8	Bolt 3/8 x 3/4	
6	0641608	48	Bolt 3/8 x 1	
7	0641609	64	Bolt 3/6 x 1-1/8	
8	0641611	16	Bolt 3/8 x 1-3/8	
9	0641613	8	Bolt 3/8 x 1-5/8	
11	0641808	8	Bolt 1/2 x 1	
12	0642020	4	Bolt 5/8 x 2-1/2	
13	0642214	1	Bolt 3/4 x 1-3/4	
14	0681813	12	Bolt 1/2 x 1-5/8 Grade 8	
15	0681814	18	Bolt 1/2 x 1-3/4 Grade 8	
16	0681815	12	Bolt 1/2 x 1-7/8 Grade 8	
17	0681816	6	Bolt 1/2 x 2 Grade 8	
18	0962033	2	Bushing	
19	1320263	4	Clamp, Cable	
	See Note	Ref	Note: Original Oscillating Cylinder May Have Been Replaced with Service Replacement. Identify PN Stamped on Cylinder Before Ordering Parts.	
21	1001228019	2	Oscillating Axle Cylinder Assembly (See Separate Breakdown in CYLINDER Section)	
21	1001251019	2	Oscillating Axle Cylinder Assembly (See Separate Breakdown in CYLINDER Section)	
22	1001251020	4	Axle Extension Cylinder Assembly (See Separate Breakdown in CYLINDER Section)	
23	3310805	8	Nut #8	
24	3312005	4	Nut 5/8	
25	3340881	8	Pad, Wear	
27	3422833	2	Pin	
28	3422915	2	Pin	
29	3422918	1	Pin	
30	3422960	4	Pin	
31	3520054	4	Plug	
32	3573294	4	Plate	
33	3573335	8	Plate	
34	3841258	4	Keeper, Pin	
35	3841287	1	Keeper, Pin	
36	3900270	4	Bolt 1/2 x 1-1/2	
37	3930820	8	Capscrew #8 x 1-1/4	
38	4071035	2	Shim #18 Gauge	
39	4071036	4	Shim #11 Gauge	
40	4071039	10	Shim #18 Gauge	
41	4071040	36	Shim #11 Gauge	
42	4071042	24	Shim #16 Gauge	
43	4071054	8	Shim #18 Gauge	
44	4071055	12	Shim #11 Gauge	
45	4360578	4	Switch, Limit	
46	4460968	4	Connector, Strain Relief	
47	4711600	144	Washer 3/8	

SECTION 1 - FRAME

ITEM	PART NUMBER	QTY	DESCRIPTION	REV
48	4711800	48	Washer 1/2	
49	4712000	4	Washer 5/8	
50	4740461	1	Thrustwasher	
51	4750800	8	Washer #8	
52	4846383	1	Box, Axle Pivot	
53	1001161401	2	Pad, Axle	
54	1001161402	8	Pad, Wear	
55	1001161403	32	Pad, Wear	
56	4846637	4	Extension, Axle	
59	4240155	6	Strap (Not Shown)	
60	1001193674	4	Sleeve, Nylon	
61	1001191541	8	Bracket, Hose Mount	

FIGURE 1-3. AXLE STOP BLOCKS INSTALLATION

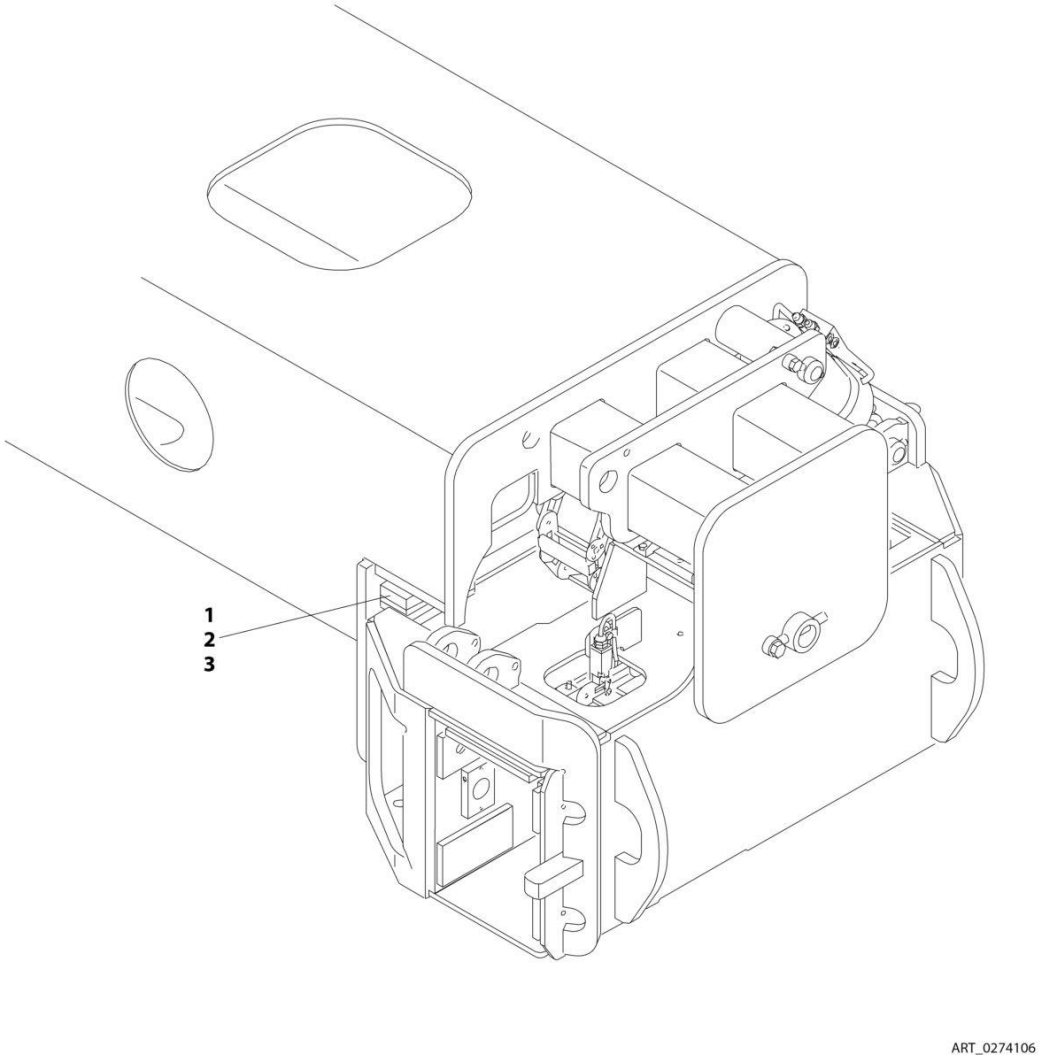

FIGURE 1-3. AXLE STOP BLOCKS INSTALLATION

ITEM	PART NUMBER	QTY	DESCRIPTION	REV
	0274106	Ref	AXLE STOP BLOCKS INSTALLATION	A
1	0100019	AR	Compound, Locking	
2	3931816	4	Capscrew 1/2 x 1	
3	4220235	2	Block, Stop	

FIGURE 1-4. STEER INSTALLATION

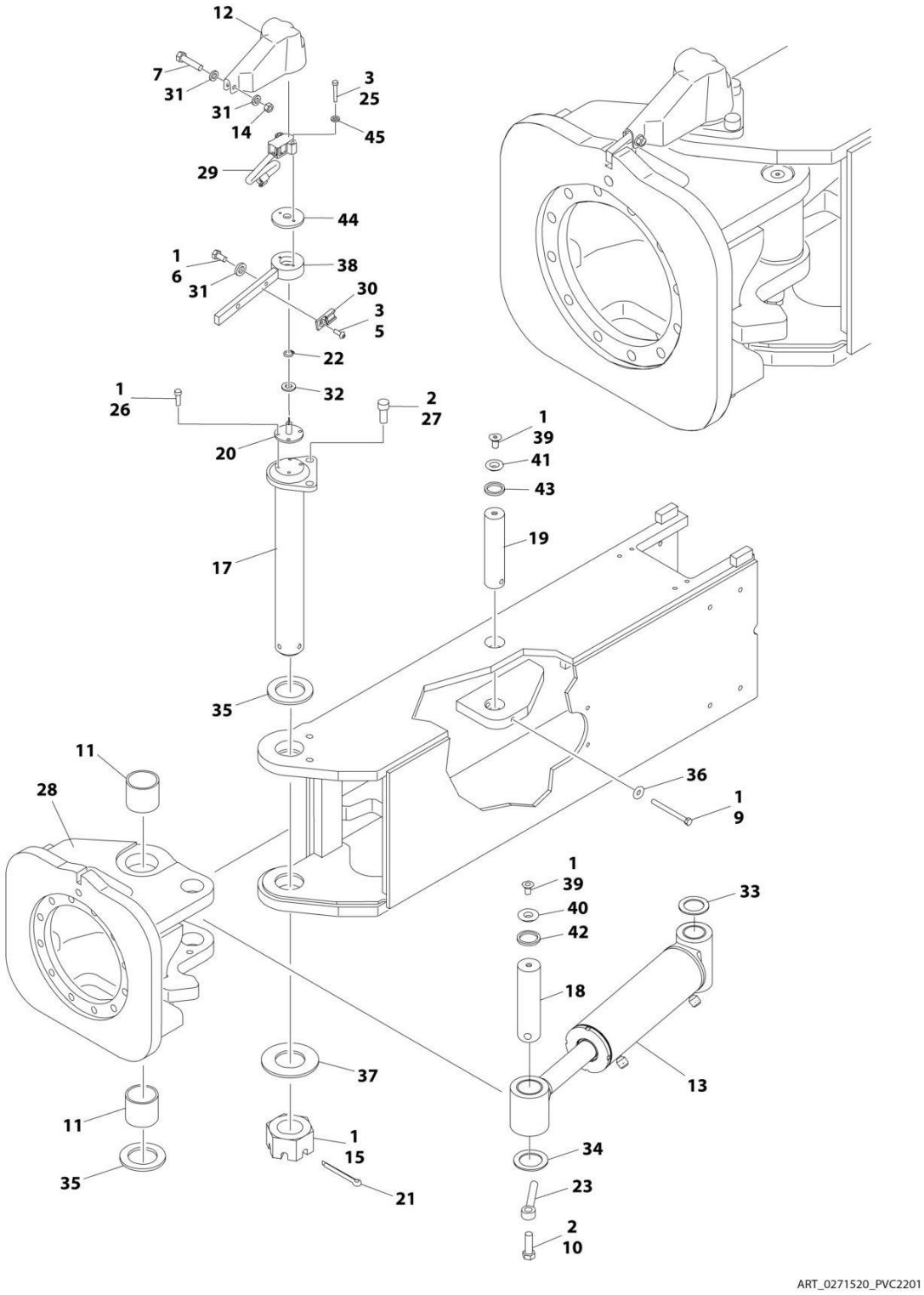

FIGURE 1-4. STEER INSTALLATION

ITEM	PART NUMBER	QTY	DESCRIPTION	REV
	0271520	Ref	STEER INSTALLATION	M
1	0100011	AR	Compound, Locking	
2	0100019	AR	Compound, Locking	
3	0100035	AR	Compound, Locking	
5	0630464	4	Screw #10 x 1/2	
6	0641505	4	Bolt 5/16 x 5/8	
7	0641511	4	Bolt 5/16 x 1-3/8	
9	0641634	4	Bolt 3/8 x 4-1/4	
10	0642016	4	Bolt 5/8 x 2	
11	0962423	8	Bushing	
12	1671040	4	Cover, Sensor	
	See Note	Ref	Note: Original Steer Cylinder May Have Been Replaced with Service Replacement. Identify PN Stamped on Cylinder Before Ordering Parts.	
13	1001228031	4	Steer Cylinder Assembly (See Separate Breakdown in CYLINDER Section)	
13	1001251031	4	Steer Cylinder Assembly (See Separate Breakdown in CYLINDER Section)	
14	3311505	4	Nut 5/16	
15	3300464	4	Nut, Slotted	
17	3422917	4	Kingpin	
18	3422940	4	Pin, Steer Cylinder (Outer)	
19	3422941	4	Pin, Steer Cylinder (Inner)	
20	3423256	4	Pin, Sensor	
21	3451214	4	Pin, Cotter 3/8 x 3-1/2	
22	3760383	4	Ring, Retaining	
23	3841258	4	Keeper, Pin	
25	3931020	8	Capscrew #10 x 1-1/4	
26	3931412	16	Capscrew 1/4 x 3/4	
27	3932024	8	Capscrew 5/8 x 1-1/2	
28	1001099632	4	Spindle	
29	4360505	4	Switch, Rotary Angle Sensor (Steer)	
30	4460914	4	Terminal	
31	4711500	12	Washer 5/16	
32	4711800	4	Washer 1/2	
33	4740181	4	Thrustwasher	
34	4740229	4	Thrustwasher	
35	4740505	8	Thrustwasher	
36	4751600	4	Washer 3/8	
37	4755000	4	Washer 2-1/2	
38	0200833	4	Arm, Steer	
39	0741606	8	Screw 3/8 x 3/4	
40	1120549	4	Cap, Seal (Outer)	
41	1120550	4	Cap, Seal (Inner)	
42	3960551	4	Seal (Outer)	
43	3960552	4	Seal (Inner)	
44	0080277	4	Adapter, Angle Sensor Pilot	
45	4811600	8	Washer M5	

FIGURE 1-5. WHEEL DRIVE INSTALLATION - REGGIANA RIDUTTORI

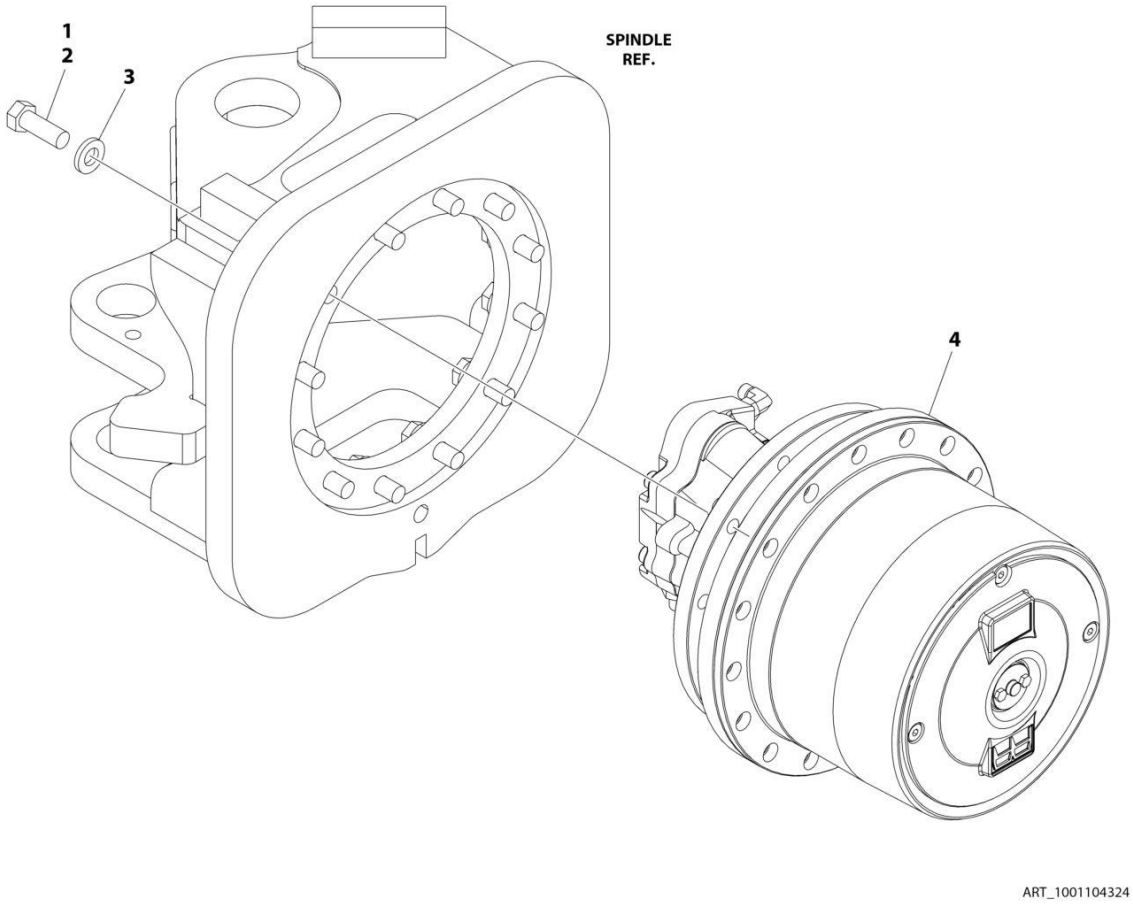

FIGURE 1-5. WHEEL DRIVE INSTALLATION - REGGIANA RIDUTTORI

ITEM	PART NUMBER	QTY	DESCRIPTION	REV
	1001104324	Ref	WHEEL DRIVE INSTALLATION - REGGIANA RIDUTTORI	B
1	0100019	AR	Compound, Locking	
2	0701617	48	Bolt M16 x 45 (12 Per Wheel)	
3	4892000	48	Washer 5/8 (12 Per Wheel)	
4	1001104315	4	Drive Hub and Motor Assembly - Reggiana Riduttori (See Separate Breakdown in this Section)	

FIGURE 1-6. DRIVE HUB AND MOTOR ASSEMBLY - REGGIANA RIDUTTORI

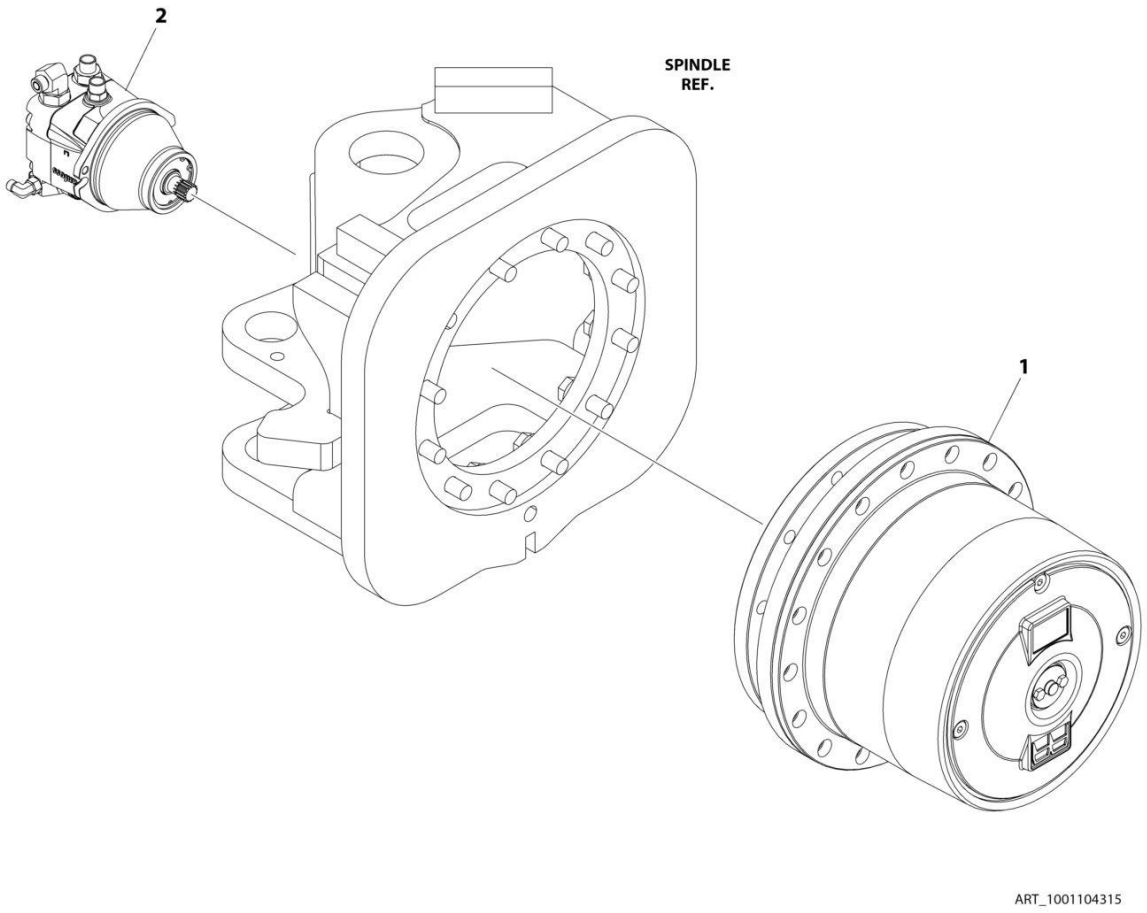

FIGURE 1-6. DRIVE HUB AND MOTOR ASSEMBLY - REGGIANA RIDUTTORI

ITEM	PART NUMBER	QTY	DESCRIPTION	REV
	1001104315	Ref	DRIVE HUB AND MOTOR ASSEMBLY - REGGIANA RIDUTTORI	B
		Ref	Note: Various brands used on Machines. When replacing complete hub, note that all 4 hubs must be the same brand.	
		Ref	Note: Various brands used on Machines. Identify brand before ordering replacement parts.	
1	1001104325	4	Drive Hub Assembly - Reggiana Riduttori (See Separate Breakdown in this Section)	
2	3160339	4	Drive Motor Assembly (See Separate Breakdown in this Section)	

FIGURE 1-7. DRIVE HUB ASSEMBLY - REGGIANA RIDUTTORI

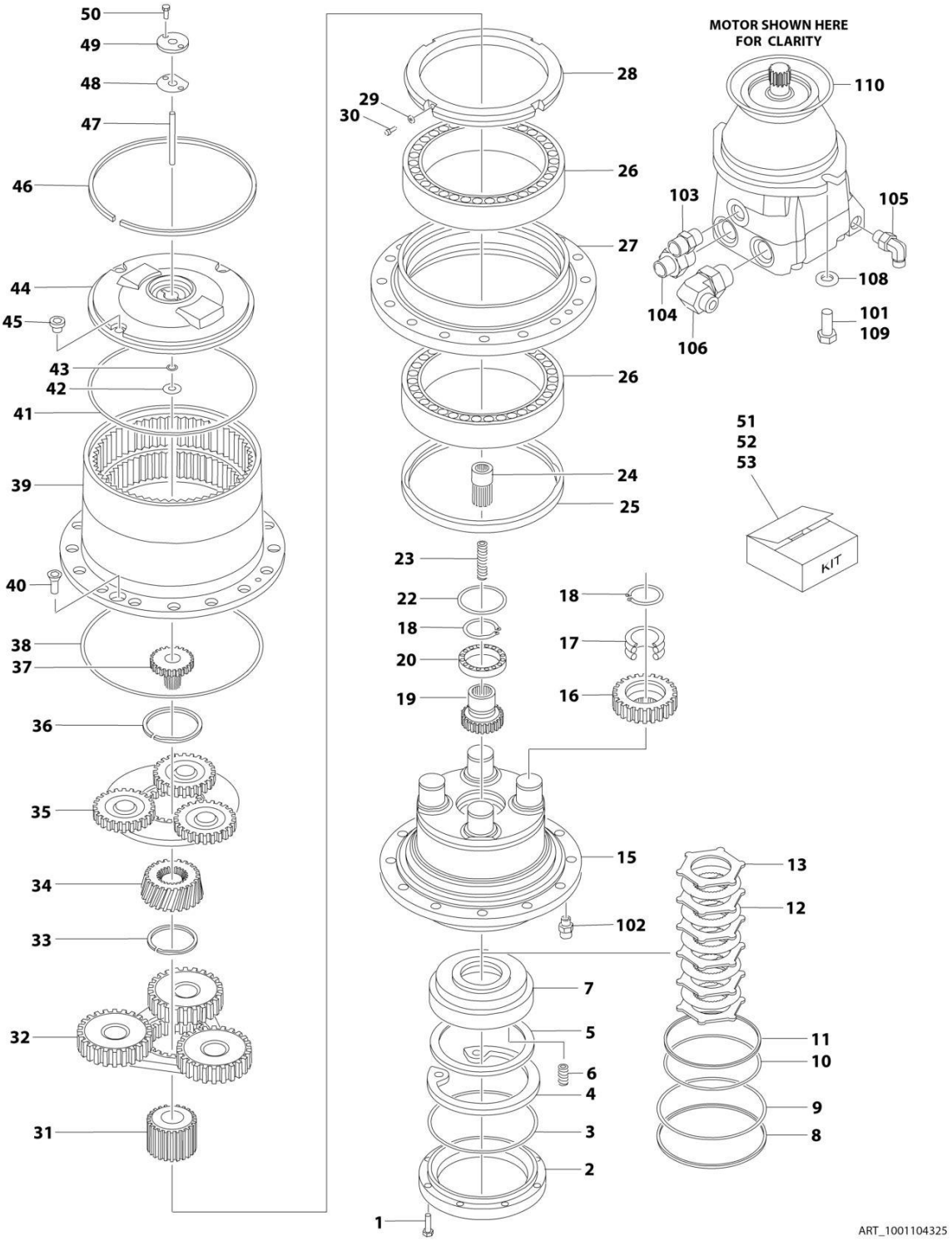

FIGURE 1-7. DRIVE HUB ASSEMBLY - REGGIANA RIDUTTORI

ITEM	PART NUMBER	QTY	DESCRIPTION	REV
	1001104325	Ref	DRIVE HUB ASSEMBLY - REGGIANA RIDUTTORI	G
		Ref	Note: Various brands used on Machines. Identify brand before ordering replacement parts.	
	1001101550	1	Hub, Torque	C
1	70002015	8	Bolt M8 x 25	
2	70002016	1	Ring, Motor Support	
3	See Note	NSS	O-Ring (Note: Use Item 51)	
4	70002018	1	Snap Ring	
5	70002019	1	Retainer, Spring	
6	70002020	9	Spring	
7	70002021	1	Piston	
8	See Note	NSS	Ring, Back-up (Note: Use Item 51 or 53)	
9	See Note	NSS	O-Ring (Note: Use Item 51 or 53)	
10	See Note	NSS	O-Ring (Note: Use Item 51 or 53)	
11	See Note	NSS	Ring, Back-up (Note: Use Item 51 or 53)	
12	70002026	5	Disc, Friction	
13	70002027	6	Disc, Steel	
15	70002029	1	Spindle	
16	70002030	4	Gear, Planetary	
17	70002031	4	Bearing	
18	70002032	5	Snap Ring	
19	70002033	1	Gear, Brake/Input	
20	70002034	1	Bearing	
22	70002035	1	Ring, Wear	
23	70002036	1	Spring	
24	70002037	1	Shaft, Engagement	
25	See Note	NSS	Seal (Note: Use Item 51)	
26	70002039	2	Bearing Assembly	
27	70002040	1	Support, Hub	
28	70002041	1	Nut, Retaining	
29	70002674	4	Washer	
30	70002674	4	Screw	
31	70002044	1	Gear, Planetary Sun	
32	70002045	1	Reduction Assembly, Secondary	
33	70002046	1	Snap Ring	
34	70002047	1	Gear, Secondary Input Sun	
35	70002048	1	Reduction Assembly, Primary	
36	70002049	1	Snap Ring	
37	70002050	1	Gear, Primary Input Sun	
38	See Note	NSS	O-Ring (Note: Use Item 51)	
39	See Note	NSS	Housing, Hub (Note: Not Available - Purchase Complete Assembly)	
40	70002052	2	Screw, Countersunk	
41	See Note	NSS	O-Ring (Note: Use Item 51 or 52)	
42	See Note	NSS	Thrustwasher (Note: Use Item 52)	
43	See Note	NSS	O-Ring (Note: Use Item 51 or 52)	
44	See Note	NSS	Cover, Hub (Note: Use Item 52)	
45	70002057	3	Plug	
46	See Note	NSS	Snap Ring (Note: Use Item 52)	
47	See Note	NSS	Pin, Engagement (Note: Use Item 52)	

SECTION 1 - FRAME

ITEM	PART NUMBER	QTY	DESCRIPTION	REV
48	See Note	NSS	Gasket (Note: Use Item 51 or 52)	
49	See Note	NSS	Cover, Engagement (Note: Use Item 52)	
50	See Note	NSS	Screw (Note: Use Item 52)	
51	70002248	1	Seal Kit (Includes Items 3, 8-11, 25, 38, 41, 43 & 48)	
52	70002247	1	Cover Kit (Includes Items 41-50)	
53	70002249	1	Brake Kit (Includes Items 4-13)	
101	0761214	2	Bolt M12 x 30	
102	2110404	1	Fitting, Adapter	
103	2110808	1	Fitting, Adapter	
104	2110812	1	Fitting, Adapter	
105	2130406	1	Fitting, 90 Adapter	
106	2130812	1	Fitting, 90 Adapter	
108	5241200	2	Washer M12	
109	0100011	AR	Compound, Locking	
110	3790158	1	O-Ring	

FIGURE 1-8. DRIVE MOTOR ASSEMBLY

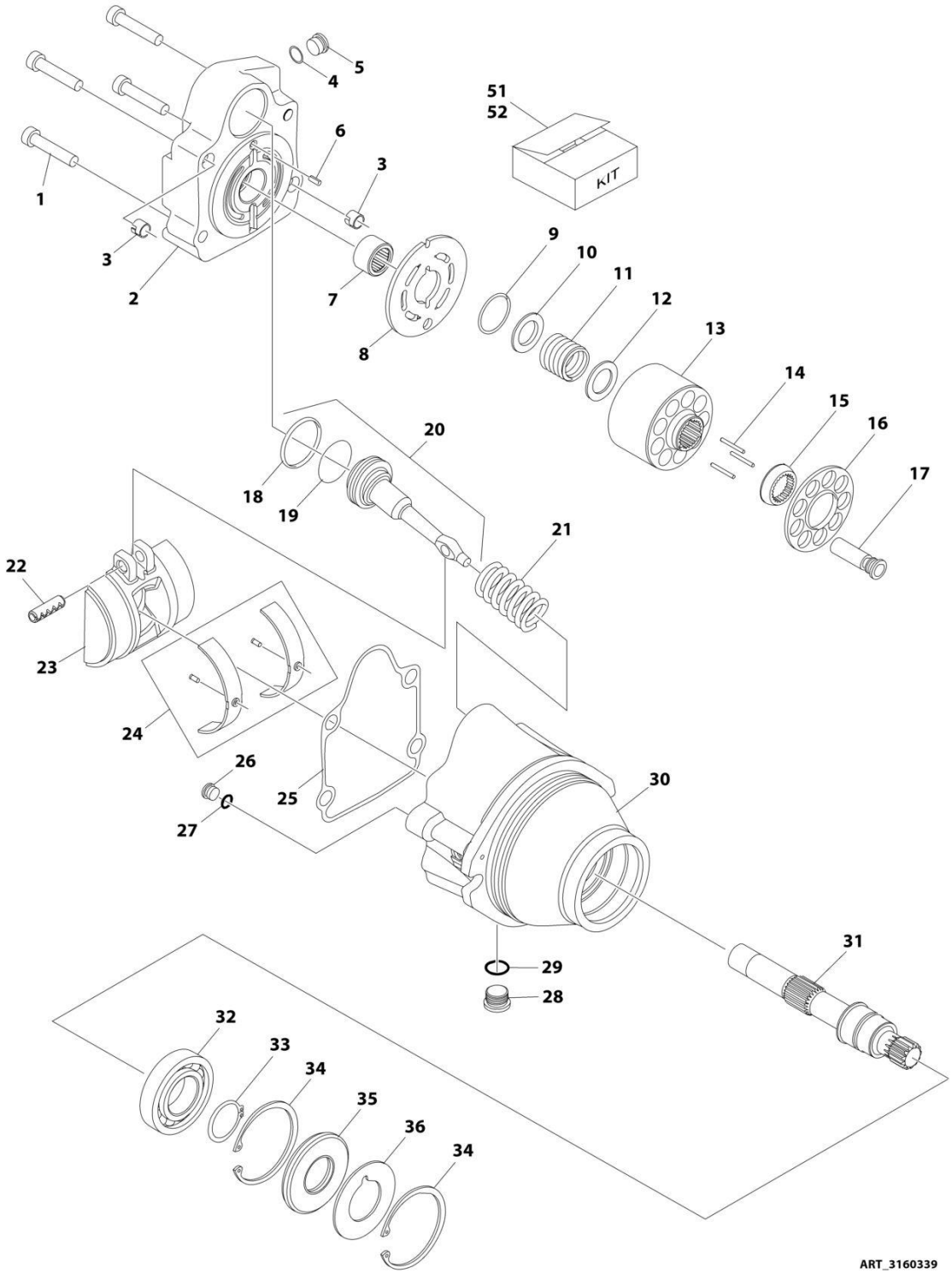

FIGURE 1-8. DRIVE MOTOR ASSEMBLY

ITEM	PART NUMBER	QTY	DESCRIPTION	REV
	3160339	Ref	DRIVE MOTOR ASSEMBLY	D
1	7022368	4	Bolt	
2	70000859	1	End Cap, Motor	
3	70003628	2	Locating Pin	
4	See Note	NSS	O-Ring (Note: Use Item 51)	
5	7007420	1	Plug (Includes Item 4)	
6	7007446	1	Pin, Dowel	
7	7021249	1	Bearing, Needle	
8	70000854	1	Plate, Valve	
9	7022311	1	Snap Ring	
10	7022314	1	Retainer, Spring	
11	7024867	1	Spring	
12	7024868	1	Washer	
13	70000855	1	Block, Cylinder	
14	7021275	3	Pin, Slipper	
15	70000856	1	Guide	
16	70000857	1	Retainer, Slipper	
17	7024865	9	Piston, Cylinder	
18	See Note	NSS	Ring, Piston (Note: Use Item 51)	
19	See Note	NSS	O-Ring (Note: Use Item 51)	
20	70000860	1	Piston, Servo (Includes Items 18 & 19)	
21	70000861	1	Spring	
22	See Note	NSS	Pin (Note: Not Available for Purchase)	
23	70000853	1	Swash Plate	
24	70000852	1	Bearing Kit	
25	See Note	NSS	Gasket (Note: Use Item 51)	
26	See Note	NSS	Plug (Note: Not Available for Purchase)	
27	See Note	NSS	O-Ring (Note: Use Item 51)	
28	7022321	1	Plug (Includes Item 29)	
29	See Note	NSS	O-Ring (Note: Use Item 51)	
30	See Note	NSS	Housing (Note: Not Available - Purchase Complete Motor)	
31	70000858	1	Shaft	
32	7007437	1	Bearing	
33	7007439	1	Snap Ring	
34	7007438	2	Snap Ring	
35	See Note	NSS	Seal (Note: Use Item 51)	
36	7022371	1	Washer, Seal Support	
51	70000862	1	Kit 1 - Motor Seal Kit (Includes Items 4, 18, 19, 25, 27, 29 & 35)	
52	7027740	1	Kit 2 - Cylinder Block Kit (Includes Items 9-17)	

FIGURE 1-9. TIRE AND WHEEL INSTALLATION - FOAM - FILLED

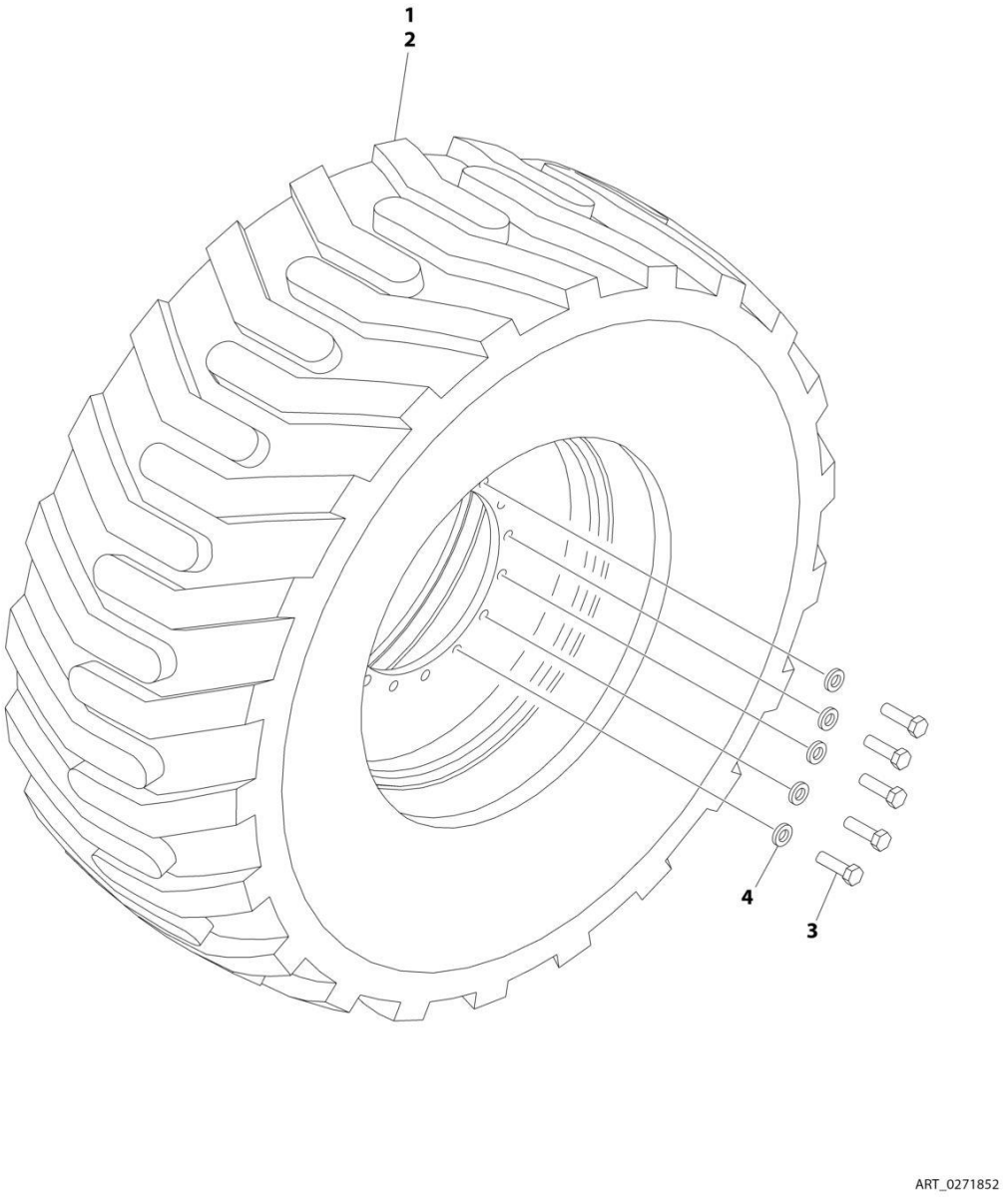

FIGURE 1-9. TIRE AND WHEEL INSTALLATION - FOAM - FILLED

ITEM	PART NUMBER	QTY	DESCRIPTION	REV
	0271852	Ref	TIRE AND WHEEL INSTALLATION - FOAM - FILLED	B
		Ref	Note: Assemblies may require ballast/foam filling to manufacturer's specifications prior to installing on a machine. Refer to Operation and Safety or Service and Maintenance Manuals. Purchase individual tire and/or rim only if able to foam fill tire and wheel assembly, otherwise, purchase complete assembly.	
1	0272055	2	Right Side Tire and Wheel Assembly - Foam - Filled	
2	0272056	2	Left Side Tire and Wheel Assembly - Foam - Filled	
3	0701619	64	Bolt M16 x 55 (16 Per Wheel)	
4	4892000	64	Washer 5/8 (16 Per Wheel)	

FIGURE 1-10. TIRE AND WHEEL INSTALLATION - SOLID

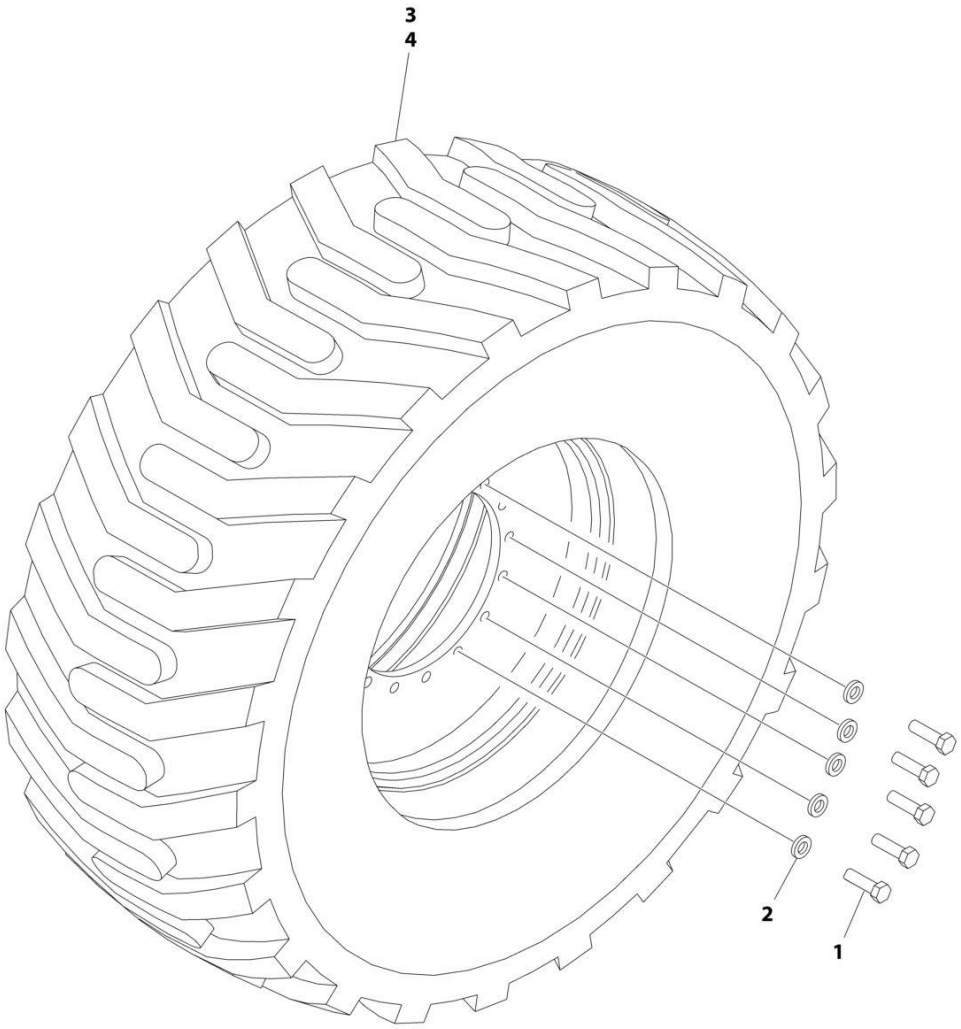

FIGURE 1-10. TIRE AND WHEEL INSTALLATION - SOLID

ITEM	PART NUMBER	QTY	DESCRIPTION	REV
	1001115961	Ref	TIRE AND WHEEL INSTALLATION - SOLID	A
1	0701619	64	Bolt M16 x 55 (16 Per Wheel)	
2	4892000	64	Washer 5/8 (16 Per Wheel)	
3	1001112716	2	Right Side Tire and Wheel Assembly - Solid	
4	1001112669	2	Left Side Tire and Wheel Assembly - Solid	

FIGURE 1-11. FRAME VALVES INSTALLATION

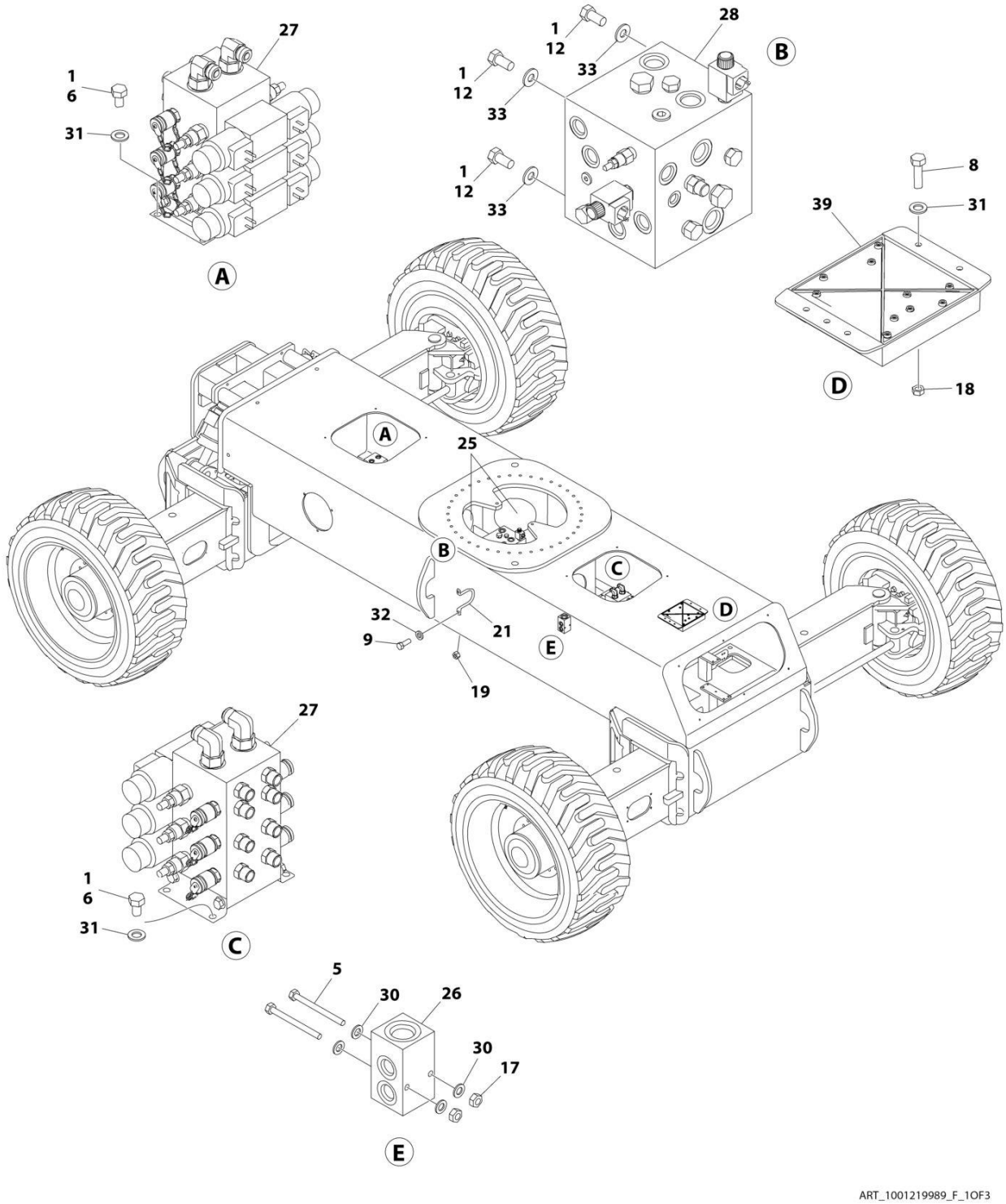

FIGURE 1-11. FRAME VALVES INSTALLATION

ITEM	PART NUMBER	QTY	DESCRIPTION	REV
	1001219989	Ref	FRAME VALVES INSTALLATION - WITH 1 CELL LSS	F
1	0100011	AR	Compound, Locking	
5	0641424	2	Bolt 1/4 x 3	
6	0641504	8	Bolt 5/16 x 1/2	
8	0641509	4	Bolt 5/16 x 1-1/8	
9	0641608	4	Bolt 3/8 x 1	
12	0641808	4	Bolt 1/2 x 1	
17	3311405	2	Nut 1/4	
18	3311505	4	Nut 5/16	
19	3311605	4	Nut 3/8	
21	3841340	2	Loop, Hose	
25	4060808	124 in/ 3.2m	Flex-Trim	
26	4641155	1	Manifold, Junction	
27	4641268	2	Valve Assembly - Steer (See Separate Breakdown in this Section)	
28	4641454	1	Traction Valve Assembly (See Separate Breakdown in this Section)	
30	4711400	4	Washer 1/4	
31	4711500	12	Washer 5/16	
32	4711600	4	Washer 3/8	
33	4711800	4	Washer 1/2	
39	1001277210	1	Module (Chassis) (Note: Re-calibration required when Replaced)	
39	2915024	1	Update Kit (Includes Cables, Programming Instructions and CD Software)	

FIGURE 1-12. STEER VALVE ASSEMBLY

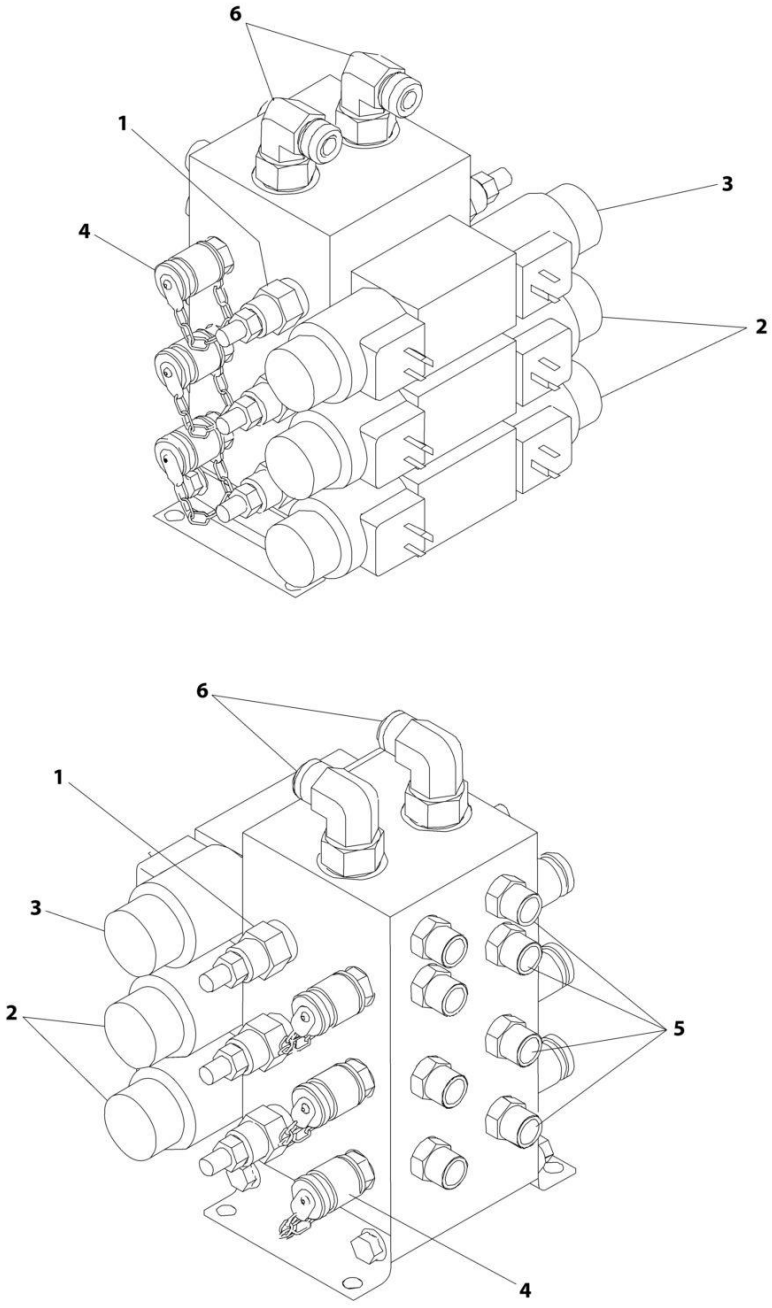

FIGURE 1-12. STEER VALVE ASSEMBLY

ITEM	PART NUMBER	QTY	DESCRIPTION	REV
	4641268	Ref	STEER VALVE ASSEMBLY	C
1	7026028	12	Cartridge (6 Per Valve)	
1	7011346	12	Seal Kit - Cartridge (1 Per Cartridge)	
2	7024927	4	Valve (2 Per Valve)	
2	7012773	4	Seal Kit - Cartridge (1 Per Cartridge)	
2	7018991	8	Coil (2 Per Valve)	
3	70001976	2	Valve (1 Per Valve)	
3	7012773	2	Seal Kit - Cartridge (1 Per Cartridge)	
3	7018991	4	Coil (2 Per Valve)	
3	70001939	2	Orifice	
4	2221086	6	Check, Pressure	
5	2110606	8	Fitting, Straight	
6	2130810	2	Fitting, 90	

FIGURE 1-13. TRACTION VALVE ASSEMBLY

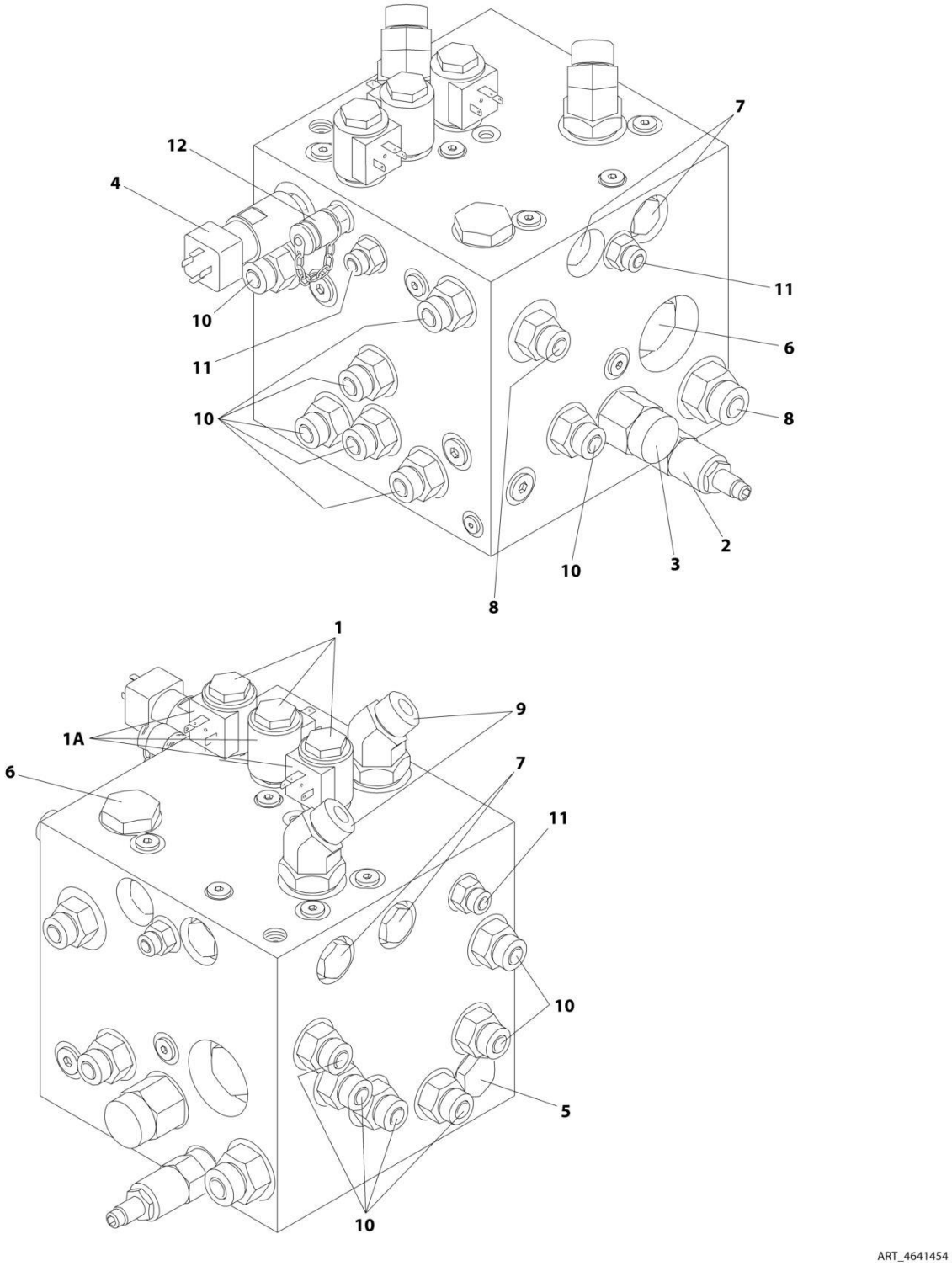

FIGURE 1-13. TRACTION VALVE ASSEMBLY

ITEM	PART NUMBER	QTY	DESCRIPTION	REV
	4641454	Ref	TRACTION VALVE ASSEMBLY	E
1	7012941	3	Cartridge, Valve (Steer, Brake and Axle Lockout)	
1	7010543	3	Seal Kit - 7012941 Cartridge	
1A	7012944	2	Coil	
2	70000801	1	Cartridge, Valve (Relief)	
2	7012998	1	Seal Kit - 70000801 Cartridge	
3	70000802	1	Cartridge, Valve (Pilot)	
3	7012942	1	Seal Kit - 70000802 Cartridge	
4	70000803	1	Pressure Switch	
5	70000804	1	Cartridge, Valve (Shuttle)	
5	70000805	1	Seal Kit - 70000804 Cartridge	
6	70000806	2	Cartridge, Valve (Flow Divider)	
6	7017405	2	Seal Kit - 70000806 Cartridge	
7	7012955	4	Cartridge, Valve (Check)	
7	7012967	4	Seal Kit - 7012955 Cartridge	
8	2111012	2	Fitting, Straight	
9	2151012	2	Fitting, 45	
10	2110810	13	Fitting, Straight	
11	2110406	3	Fitting, Straight	
12	2221086	1	Check, Pressure	
13	2220883	1	Plug, #4 (Not Shown)	

FIGURE 1-14. FRAME COVERS INSTALLATION

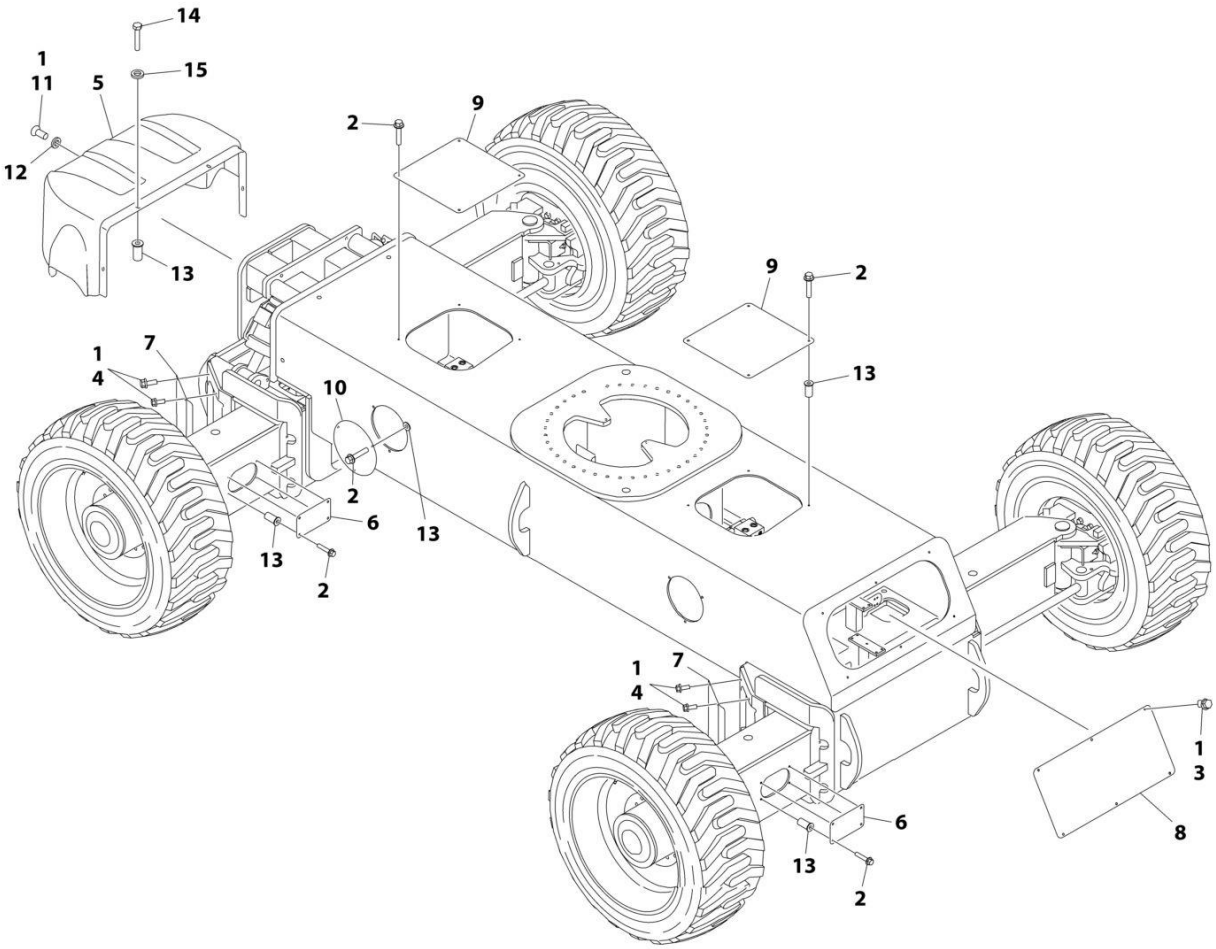

FIGURE 1-14. FRAME COVERS INSTALLATION

ITEM	PART NUMBER	QTY	DESCRIPTION	REV
	1001176346	Ref	FRAME COVERS INSTALLATION - ABS	C
1	0100011	AR	Compound, Locking	
2	0791410	36	Screw 1/4 x 1-1/4	
3	0791604	6	Screw 3/8 x 1/2	
4	0791607	16	Screw 3/8 x 7/8	
5	1670996	1	Cover, Front	
6	1671045	4	Plate, Cover (Axle Side)	
7	1671046	4	Plate, Cover (Axle Corner)	
8	1671047	1	Plate, Cover (Rear)	
9	1671048	2	Plate, Cover (Frame Top)	
10	1671049	4	Plate, Cover (Frame Side)	
11	3900283	3	Screw 3/8 x 3/4	
12	4751600	3	Washer 3/8	
13	8580420	40	Nut, Well	
14	0641412	4	Bolt 1/4 x 1-1/2	
15	4740430	4	Washer, Fender	

SECTION 2 - TURNTABLE

FIGURE 2-1. TURNTABLE VALVES INSTALLATION

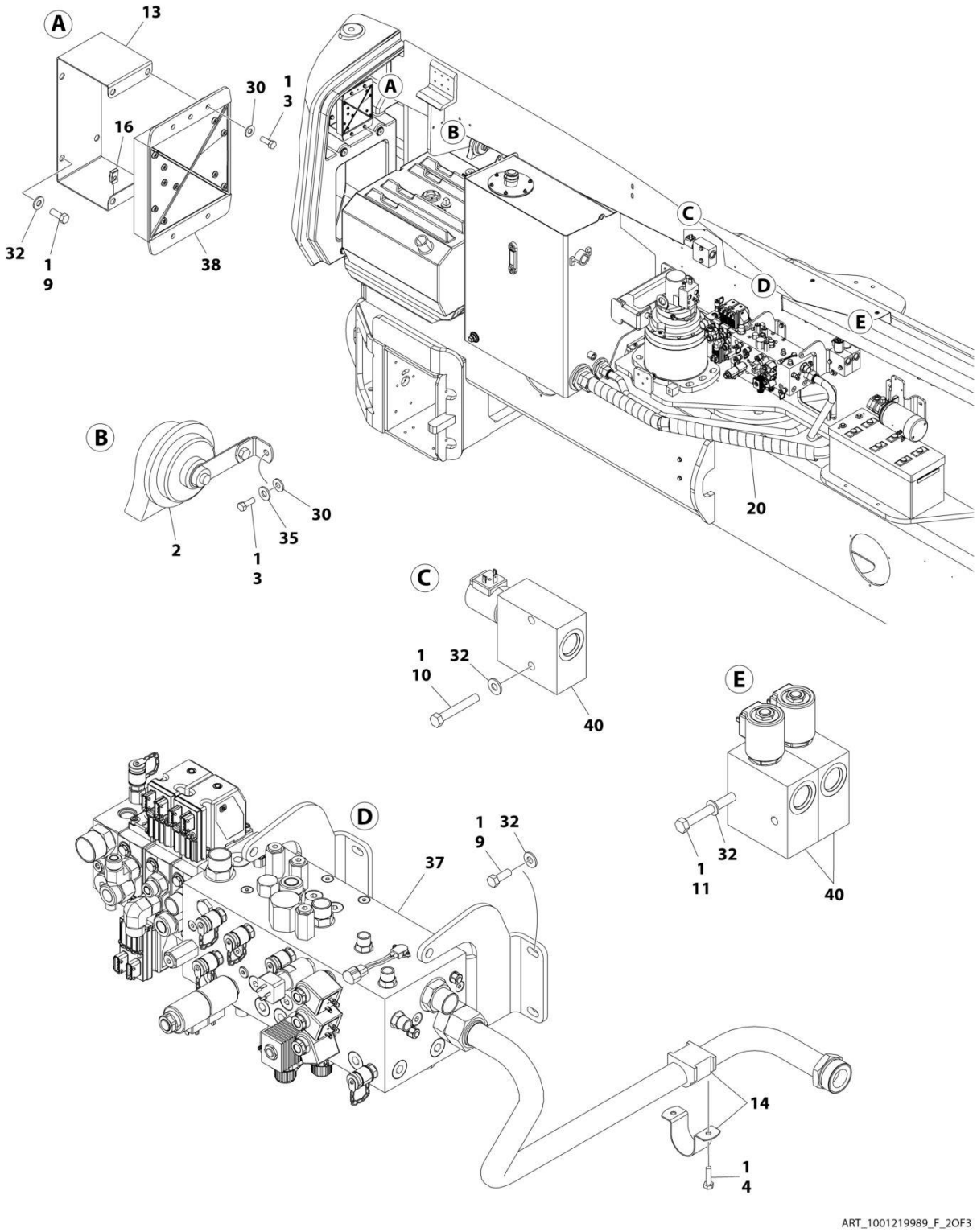

FIGURE 2-1. TURNTABLE VALVES INSTALLATION

ITEM	PART NUMBER	QTY	DESCRIPTION	REV
	1001219989	Ref	TURNTABLE VALVES INSTALLATION	F
1	0100011	AR	Compound, Locking	
2	0140001	1	Horn	
3	0641406	5	Bolt 1/4 x 3/4	
4	0641408	2	Bolt 1/4 x 1	
9	0641608	8	Bolt 3/8 x 1	
10	0641620	2	Bolt 3/8 x 2-1/2	
11	0641636	2	Bolt 3/8 x 4-1/2	
13	0902800	1	Bracket, Module Mounting	
14	1320322	1	Clamp	
16	3300454	4	Nut, Special	
20	3380523	1	Shield, Tube	
30	4711400	5	Washer 1/4	
32	4711600	12	Washer 3/8	
35	4791400	1	Starwasher 1/4	
37	1001246762	1	Main Valve Assembly (See Separate Breakdown in this Section)	
38	1001227960	1	Module, B.L.A.M (Note: Control System must be Re-calibrated when Module is Replaced)	
40	1001112850	3	Enable Valve Assembly	
40	7024890	3	Coil	

FIGURE 2-2. MAIN VALVE ASSEMBLY

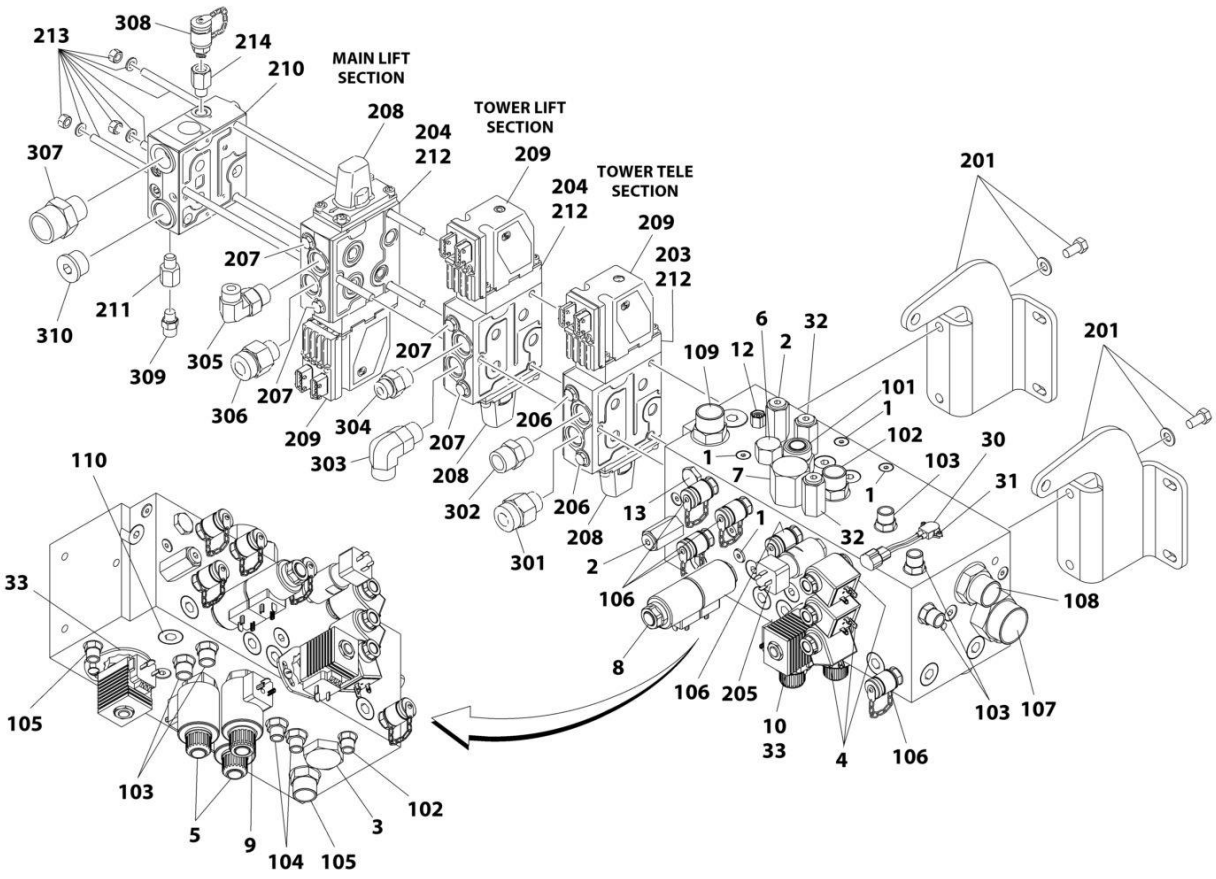

FIGURE 2-2. MAIN VALVE ASSEMBLY

ITEM	PART NUMBER	QTY	DESCRIPTION	REV
	1001246762	Ref	MAIN VALVE ASSEMBLY	C
		Ref	MAIN VALVE BODY COMPONENTS	
1	7026684	4	Cartridge, Check Valve	
1	7026685	4	Seal Kit - Valve	
2	7026686	2	Cartridge, Relief Valve	
2	7026687	2	Seal Kit - Valve	
3	7026688	1	Cartridge, Check Valve	
3	7026689	1	Seal Kit - Valve	
4	70007229	3	Cartridge, Solenoid Valve Less Coil	
4	70007230	3	Seal Kit - Valve	
4	70007231	3	Coil	
5	7026692	2	Cartridge, Solenoid Valve Less Coil	
5	7026693	2	Seal Kit - Valve	
5	7027207	2	Coil	
6	7026694	1	Cartridge, Differential Sensing Valve	
6	7026695	1	Seal Kit - Valve	
7	7026696	1	Cartridge, Differential Sensing Valve	
7	7026697	1	Seal Kit - Valve	
8	70007226	1	Cartridge, Solenoid Valve Less Coil	
8	70007227	1	Seal Kit - Valve	
8	70007228	2	Coil	
9	7027882	1	Valve Assembly, Solenoid	
9	7026693	1	Seal Kit - Valve	
9	7027208	1	Coil	
10	7027200	2	Cartridge, Solenoid Valve	
10	7010697	2	Seal Kit - Valve	
10	7012943	2	Coil	
12	7027201	1	Cartridge, Check Valve	
12	7027202	1	Seal Kit - Valve	
13	7027203	1	Cartridge, Check Valve	
13	7026687	1	Seal Kit - Valve	
30	7027738	1	Switch, Thermostatic	
31	70006315	2	Screw #6 x 1/2	
32	7027204	2	Cartridge, Relief Valve	
32	7026687	2	Seal Kit - Valve	
33	70000781	2	Lock Plate, Cartridge	
33	3941404	2	Screw, Self-Tapping	
		Ref	MAIN VALVE BODY FITTINGS	
101	2111210	1	Fitting, Straight	
102	2111010	2	Fitting, Straight	
103	2110606	5	Fitting, Straight	
104	2110406	2	Fitting, Straight	
105	2110404	2	Fitting, Straight	
106	2221086	5	Check, Pressure	
107	2112016	1	Fitting, Straight	
108	2111216	1	Fitting, Straight	
109	2111212	1	Fitting, Straight	
110	2220887	1	Plug	
		Ref	PROPORTIONAL VALVE SECTION AND ADDITIONAL COMPONENTS	

SECTION 2 - TURNTABLE

ITEM	PART NUMBER	QTY	DESCRIPTION	REV
201	7026671	2	Bracket	
203	See Note	NSS	Spool Assembly (Tower Telescope) (Note: Use Item 212)	
204	See Note	NSS	Spool Assembly (Tower/Main Lift) (Note: Use Item 212)	
205	7026672	1	Switch, Pressure	
206	See Note	NSS	Valve, Shock	
207	See Note	NSS	Valve, Shock	
208	See Note	NSS	Cover	
208	8007894	AR	Seal Kit, Cover Mounting (1 per cover)	
209	70001873	3	Actuator, Electrical	
209	8007954	AR	Seal Kit, Actuator Mounting (1 per actuator)	
210	70001421	1	Module, Pump Side	
210	8007939	1	Seal Kit, Pump Side Module (Internal Seals for Pump Side Module)	
211	7026678	1	Plug with Check Valve	
212	70002742	1	Module, Tower Lift (Includes Items 204, 207, 208, 210 Seal Kit and p/n 8007935 Seal Kit)	
212	70002743	1	Module, Tower Telescope (Includes Items 203, 206, 208, 210 Seal Kit and p/n 8007935 Seal Kit)	
212	70003043	1	Module, Main Lift (Includes Items 204, 207, 208, 210 Seal Kit and p/n 8007935 Seal Kit)	
212	8007935	AR	Seal Kit, Module Mounting (Includes seals for one side of Module - requires four for complete valve)	
213	7026680	1	Tie-Rod Kit (Includes Hardware and Seals)	
214	See Note	1	Fitting, Adapter (Note: Not Available for Purchase)	
		Ref	PROPORTIONAL VALVE SECTION FITTINGS	
301	2111210	1	Fitting, Straight	
302	2111010	1	Fitting, Straight	
303	2131010	1	Fitting, 90	
304	2110810	1	Fitting, Straight	
305	2130810	1	Fitting, 90	
306	2111210	1	Fitting, Straight	
307	7026683	2	Fitting, Straight	
308	2221086	1	Check, Pressure	
309	2110404	1	Fitting, Straight	
310	2220888	1	Plug	

FIGURE 2-3. BATTERY AND AUXILIARY PUMP INSTALLATION - WITHOUT COLD WEATHER PLUS PACKAGE

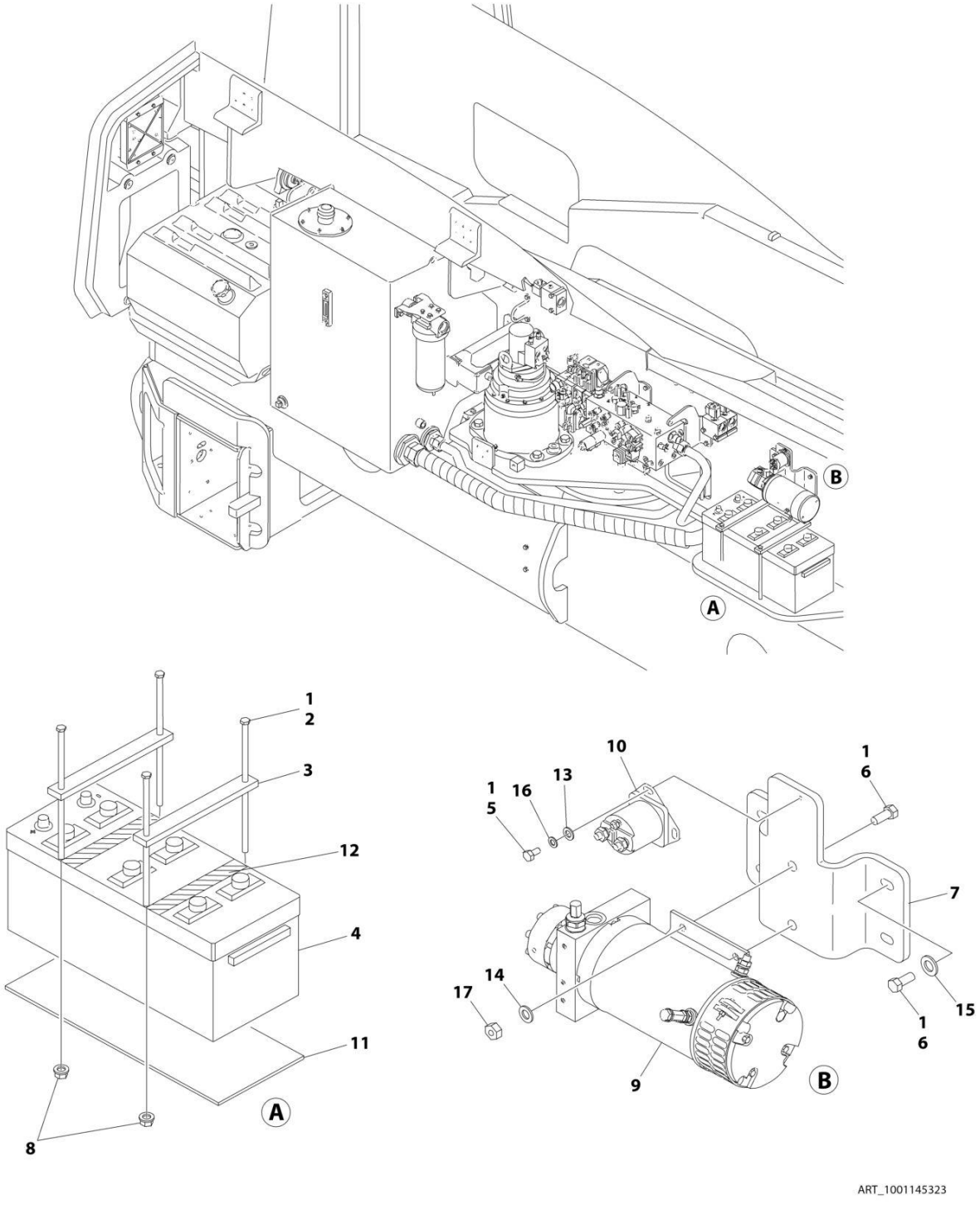

FIGURE 2-3. BATTERY AND AUXILIARY PUMP INSTALLATION - WITHOUT COLD WEATHER PLUS PACKAGE

ITEM	PART NUMBER	QTY	DESCRIPTION	REV
	1001145323	Ref	BATTERY AND AUXILIARY PUMP INSTALLATION - WITHOUT COLD WEATHER PLUS PACKAGE	B
1	0100011	AR	Compound, Locking	
2	0236768	4	Rod, Hold-down	
3	0363062	2	Bar, Battery	
4	0400020	1	Battery	
5	0641408	2	Bolt 1/4 x 1	
6	0641607	8	Bolt 3/8 x 7/8	
7	0903696	1	Bracket	
8	3311608	4	Nut 3/8	
9	1001162880	1	Auxiliary Pump Assembly (See Separate Breakdown in this Section)	
10	3740067	1	Relay	
11	3980006	1	Seat, Battery	
12	4420037	17 in /43cm	Tape, Insulation	
13	4711400	2	Washer 1/4	
14	4711600	4	Washer 3/8	
15	4751600	4	Washer 3/8	
16	4791400	2	Starwasher 1/4	
17	3311605	4	Nut 3/8	

FIGURE 2-4. BATTERY AND AUXILIARY PUMP INSTALLATION - WITH COLD WEATHER PLUS PACKAGE

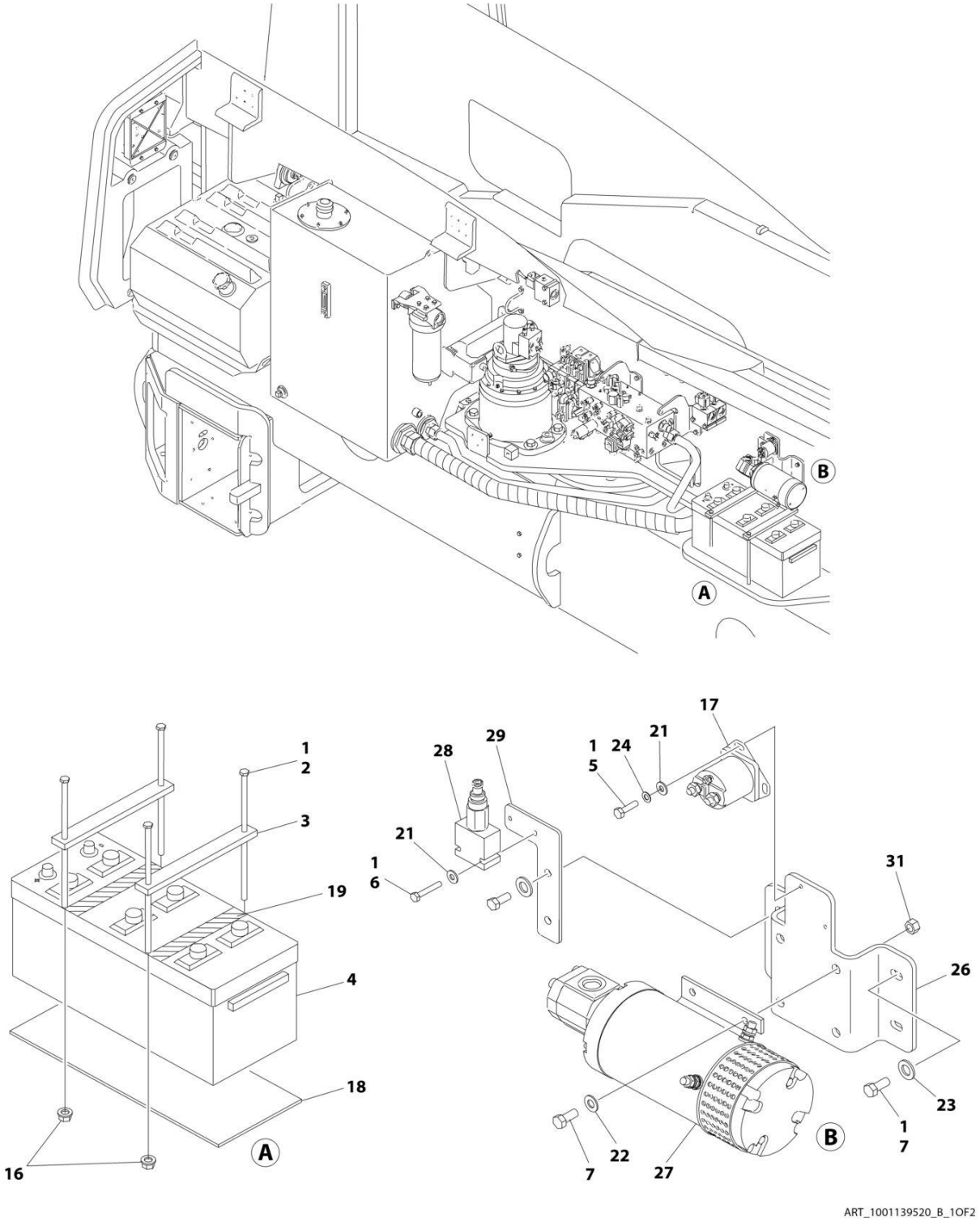

ART_1001139520_B_1OF2

FIGURE 2-4. BATTERY AND AUXILIARY PUMP INSTALLATION - WITH COLD WEATHER PLUS PACKAGE

ITEM	PART NUMBER	QTY	DESCRIPTION	REV
	1001139520	Ref	BATTERY AND AUXILIARY PUMP INSTALLATION - WITH COLD WEATHER PLUS PACKAGE	B
1	0100011	AR	Compound, Locking	
2	0236768	4	Rod, Hold-down	
3	0363062	2	Bar, Battery	
4	0400020	1	Battery	
5	0641404	2	Bolt 1/4 x 1/2	
5	0641408	2	Bolt 1/4 x 1	
6	0641413	2	Bolt 1/4 x 1-5/8	
7	0641607	8	Bolt 3/8 x 7/8	
16	3311608	4	Nut 3/8	
17	3740067	1	Relay	
18	3980006	1	Seat, Battery	
19	4420037	17 in /43cm	Tape, Insulation	
21	4711400	4	Washer 1/4	
22	4711600	4	Washer 3/8	
23	4751600	4	Washer 3/8	
24	4791400	2	Starwasher 1/4	
26	0903696	1	Bracket	
27	1001138838	1	Auxiliary Pump Assembly (See Separate Breakdown in this Section)	
28	1001133163	1	Valve, Relief	
28	7023936	1	Seal Kit	
29	1001133593	1	Bracket	
31	3311605	4	Nut 3/8	

FIGURE 2-5. AUXILIARY PUMP ASSEMBLY (WITHOUT COLD WEATHER PLUS PACKAGE)

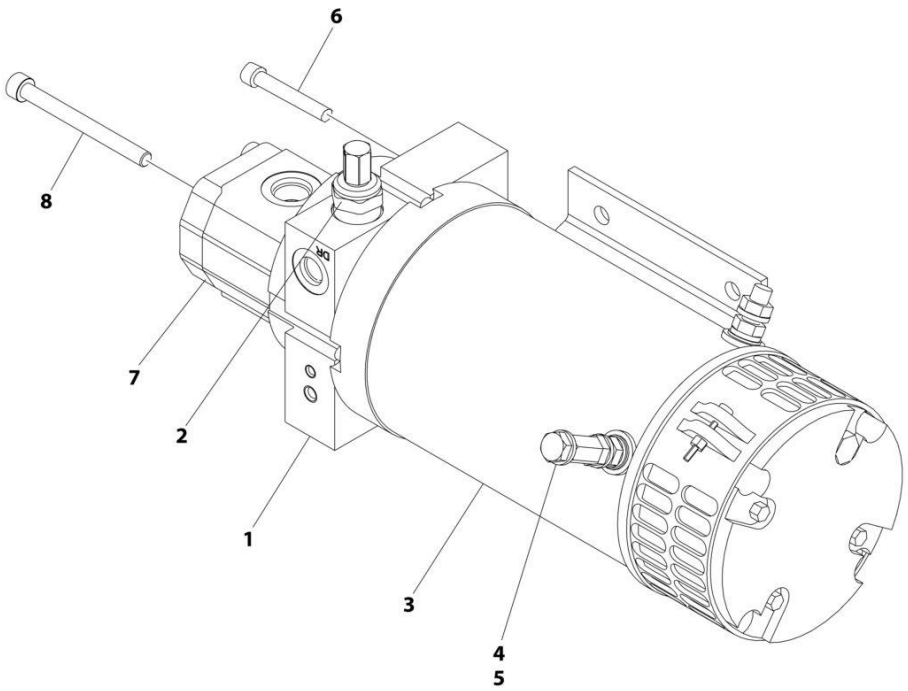

FIGURE 2-5. AUXILIARY PUMP ASSEMBLY (WITHOUT COLD WEATHER PLUS PACKAGE)

ITEM	PART NUMBER	QTY	DESCRIPTION	REV
	1001162880	Ref	AUXILIARY PUMP ASSEMBLY (WITHOUT COLD WEATHER PLUS PACKAGE)	A
1	1001164700	1	Base Assembly	
1	70005618	1	Plug	
1	70005617	1	Spring	
1	70005616	1	Poppet, Check	
2	1001164700	1	Valve, Relief	
3	See Note	1	Motor (Note: Not Available for Purchase)	
4	70004006	1	Nut 3/8	
5	70004007	1	Bolt 3/8x3/4	
6	70004005	4	Capscrew 1/4x3	
6	See Note	1	Sleeve (Note: Not Available for Purchase)	
7	See Note	1	Pump Assembly (Note: Not Available for Purchase)	
7	70005615	1	Seal, Shaft	
7	70005619	1	Bearing	
8	See Note	4	Screw M8 x 85 (Note: Not Available for Purchase)	

FIGURE 2-6. AUXILIARY PUMP ASSEMBLY (WITH COLD WEATHER PLUS PACKAGE)

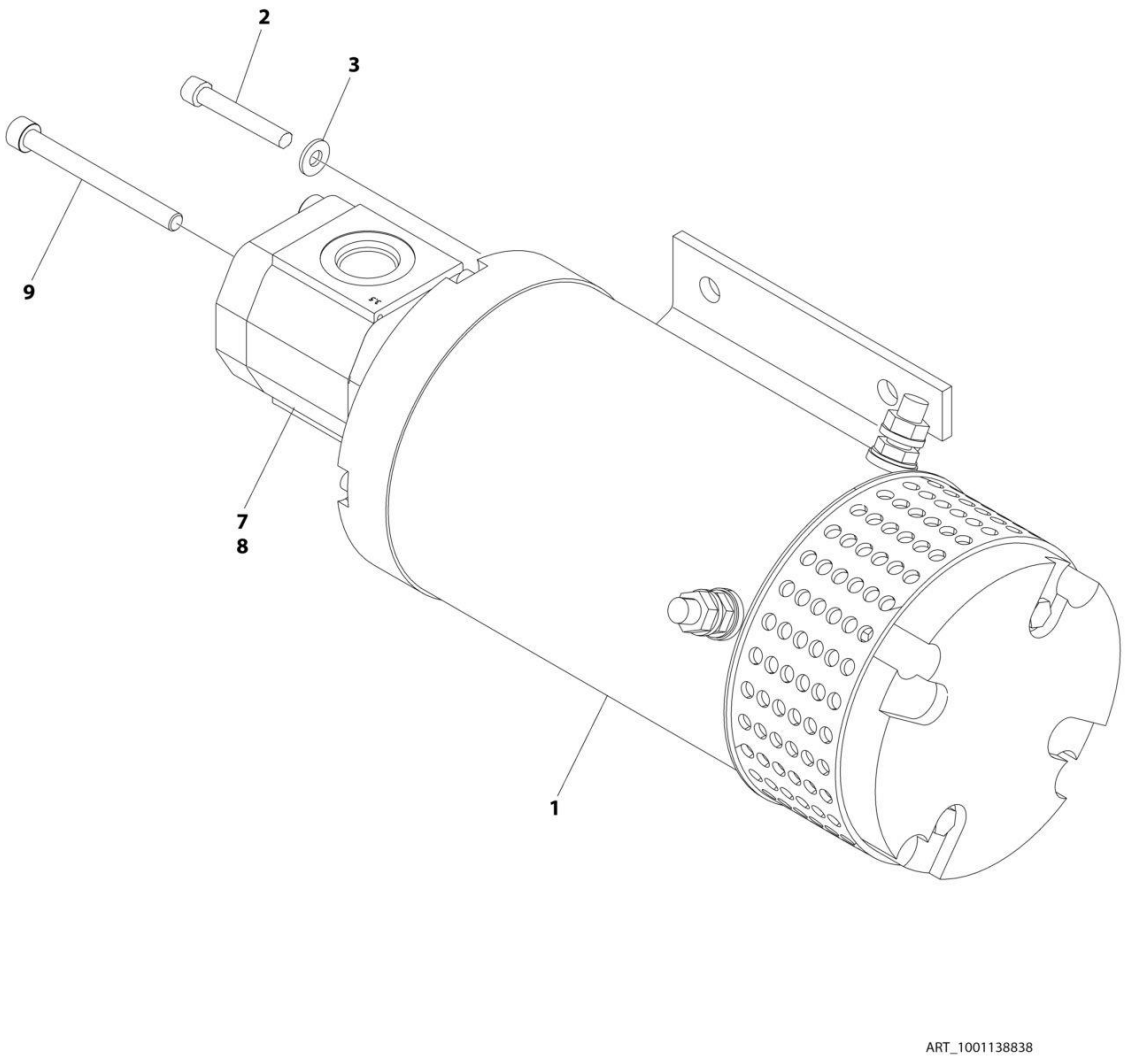

FIGURE 2-6. AUXILIARY PUMP ASSEMBLY (WITH COLD WEATHER PLUS PACKAGE)

ITEM	PART NUMBER	QTY	DESCRIPTION	REV
	1001138838	Ref	AUXILIARY PUMP ASSEMBLY (WITH COLD WEATHER PLUS PACKAGE)	A
1	70003800	1	Motor	
1	See Note	NSS	Shaft (Note: Not Available for Purchase)	
2	70003801	4	Capscrew 5/16 x 3/4 (Pump Mounting)	
3	70003802	4	Washer 5/16	
4	See Note	NSS	Adapter (Not Shown) (Note: Not Available for Purchase)	
5	See Note	NSS	Pin, Dowel (Not Shown) (Note: Not Available for Purchase)	
6	See Note	NSS	O-Ring (Not Shown) (Note: Not Available for Purchase)	
7	70003803	1	Pump Assembly	
7	See Note	NSS	Seal, Shaft (Note: Not Available for Purchase)	
8	See Note	NSS	Cover, Rear (Note: Not Available for Purchase)	
9	See Note	NSS	Screw M8 x 80 (Note: Not Available for Purchase)	

FIGURE 2-7. SWING DRIVE INSTALLATION

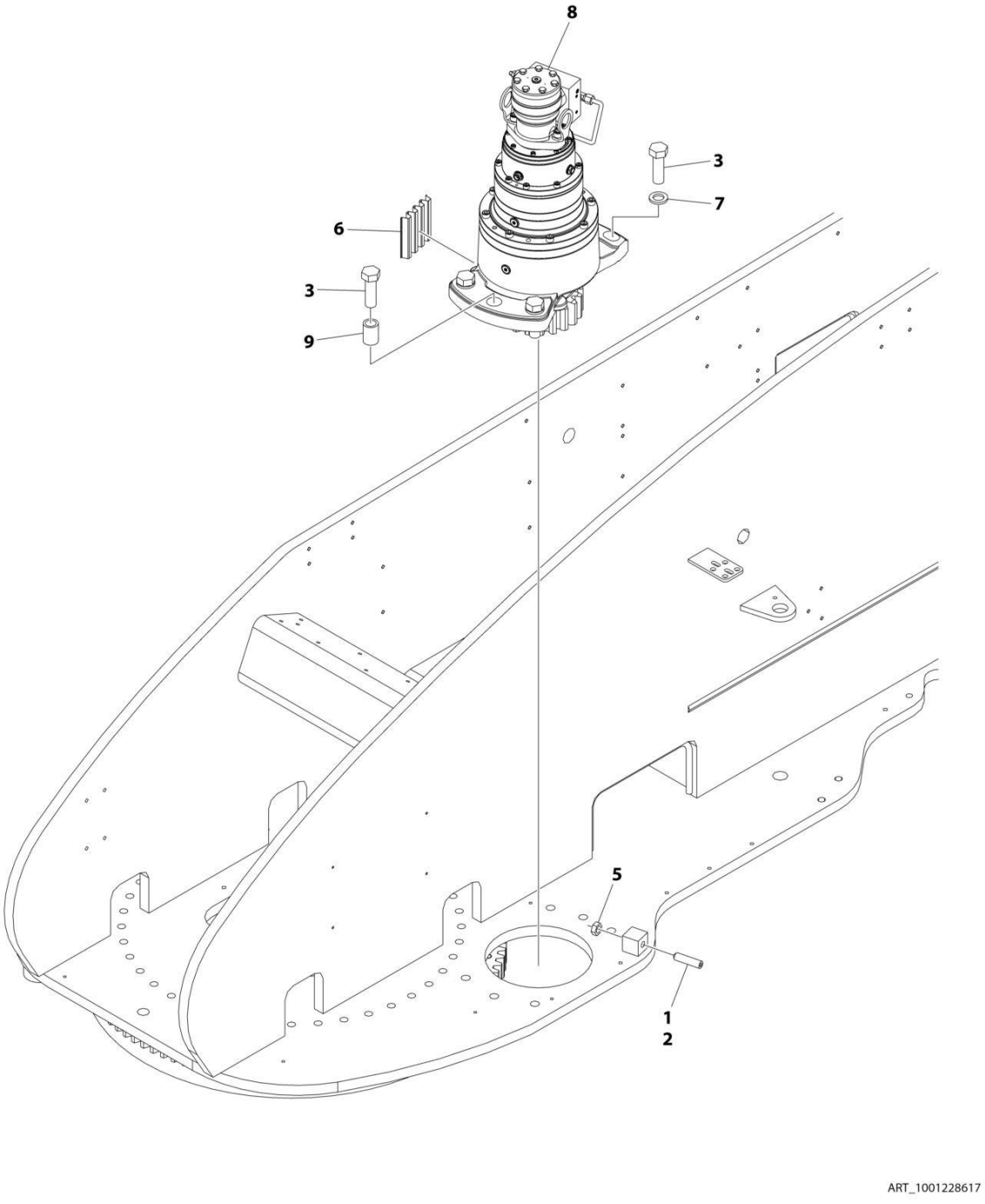

FIGURE 2-7. SWING DRIVE INSTALLATION

ITEM	PART NUMBER	QTY	DESCRIPTION	REV
	1001228617	Ref	SWING DRIVE INSTALLATION	E
1	0100019	AR	Compound, Locking	
2	3952020	1	Setscrew 5/8 x 2-1/2	
3	0682422	6	Bolt 7/8 x 2-3/4 Grade 8	
5	3312002	1	Nut 5/8	
6	4071041	1	Shim	
7	4892400	5	Washer 7/8	
8	1001228488	1	Swing Motor/Hub Assembly (See Separate Breakdown in this Section)	
9	1001229058	1	Sleeve	

FIGURE 2-8. TURNTABLE BEARING AND LUBE INSTALLATION

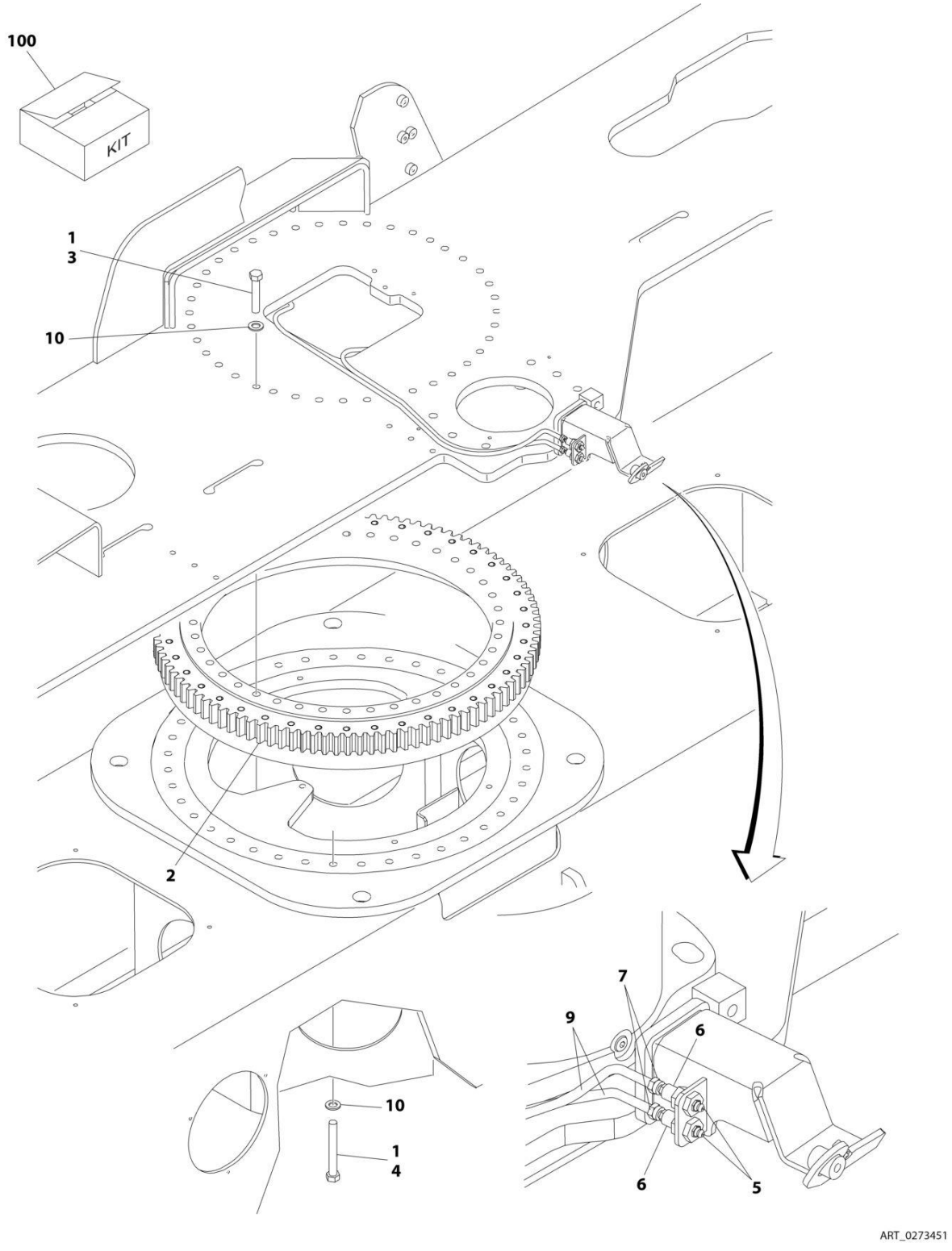

FIGURE 2-8. TURNTABLE BEARING AND LUBE INSTALLATION

ITEM	PART NUMBER	QTY	DESCRIPTION	REV
	0273451	Ref	TURNTABLE BEARING AND LUBE INSTALLATION	B
1	0100019	AR	Compound, Locking	
2	0440251	1	Bearing, Turntable	
3	0682026	40	Bolt 5/8 x 3-1/4 Grade 8	
4	0682040	40	Bolt 5/8 x 5 Grade 8	
5	2160002	2	Fitting, Grease	
6	2180344	2	Fitting, Bulkhead	
7	2220001	2	Fitting, Straight Swivel	
9	2750528	2	Hose	
10	4892000	80	Washer 5/8	
100	2915072	1	TURNTABLE BEARING KIT	

FIGURE 2-9. TURNTABLE LOCK INSTALLATION

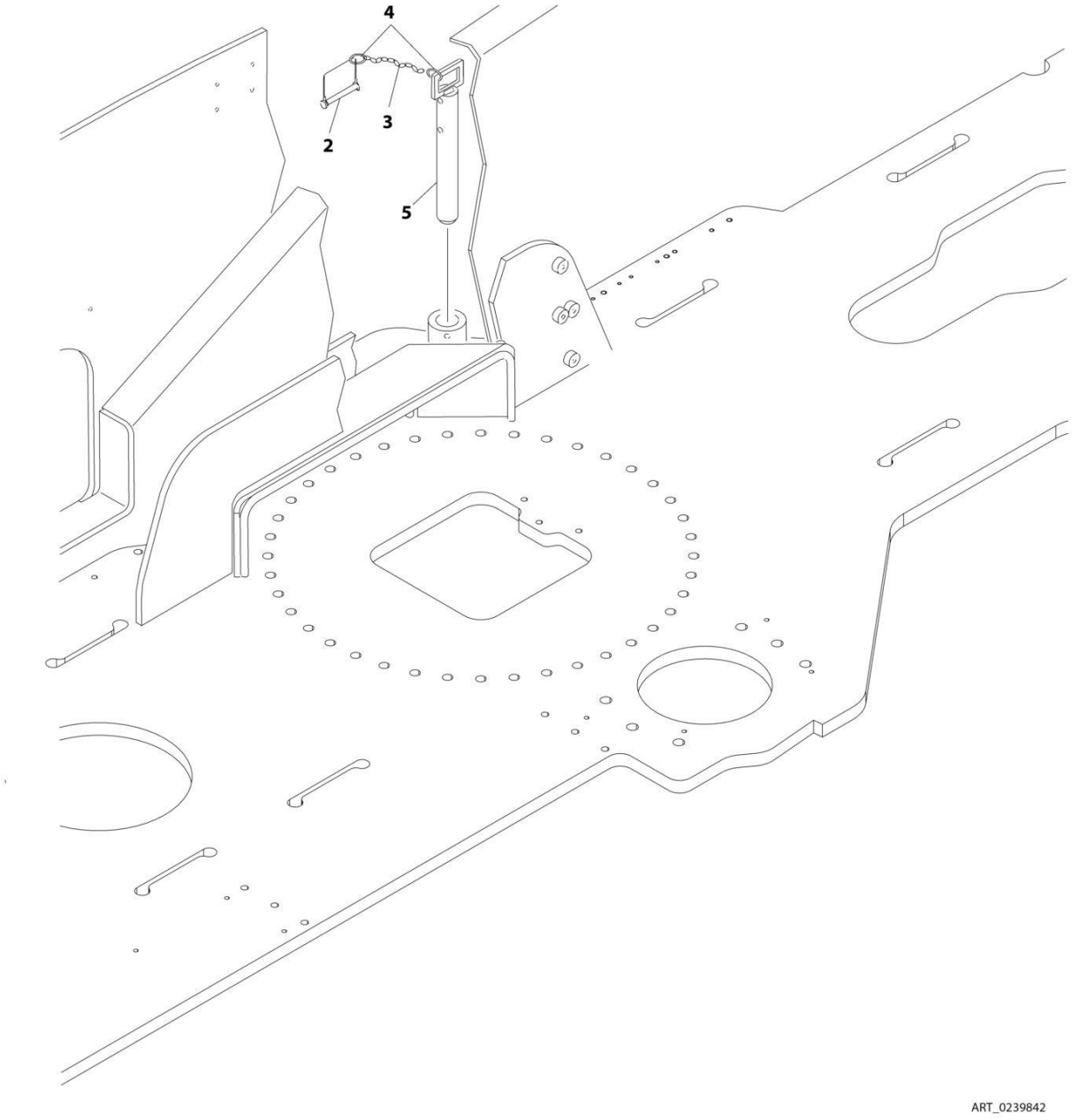

FIGURE 2-9. TURNTABLE LOCK INSTALLATION

ITEM	PART NUMBER	QTY	DESCRIPTION	REV
	0239842	Ref	TURNTABLE LOCK INSTALLATION	B
2	3421565	1	Pin, Snap	
3	1260017	9 in/23cm	Chain - #3	
4	3760170	2	Ring, Quick Release	
5	3421563	1	Pin, Turntable Lock	

FIGURE 2-10. PINION SHIELD INSTALLATION

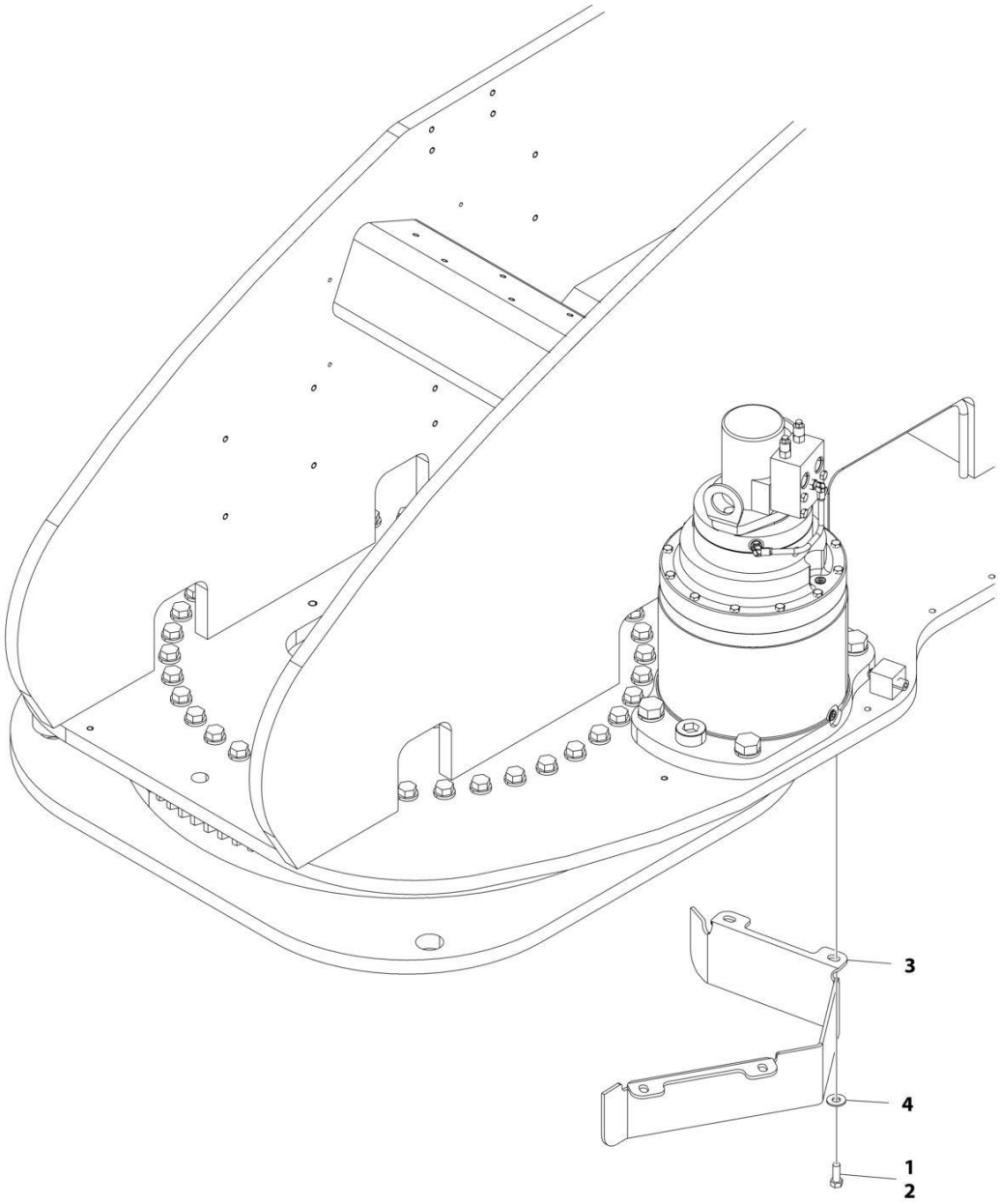

FIGURE 2-10. PINION SHIELD INSTALLATION

ITEM	PART NUMBER	QTY	DESCRIPTION	REV
	0271874	Ref	PINION SHIELD INSTALLATION	A
1	0100011	AR	Compound, Locking	
2	0641608	4	Bolt 3/8 x 1	
3	3573355	1	Plate, Pinion	
4	4751600	4	Washer 3/8	

FIGURE 2-11. SWING MOTOR/HUB ASSEMBLY

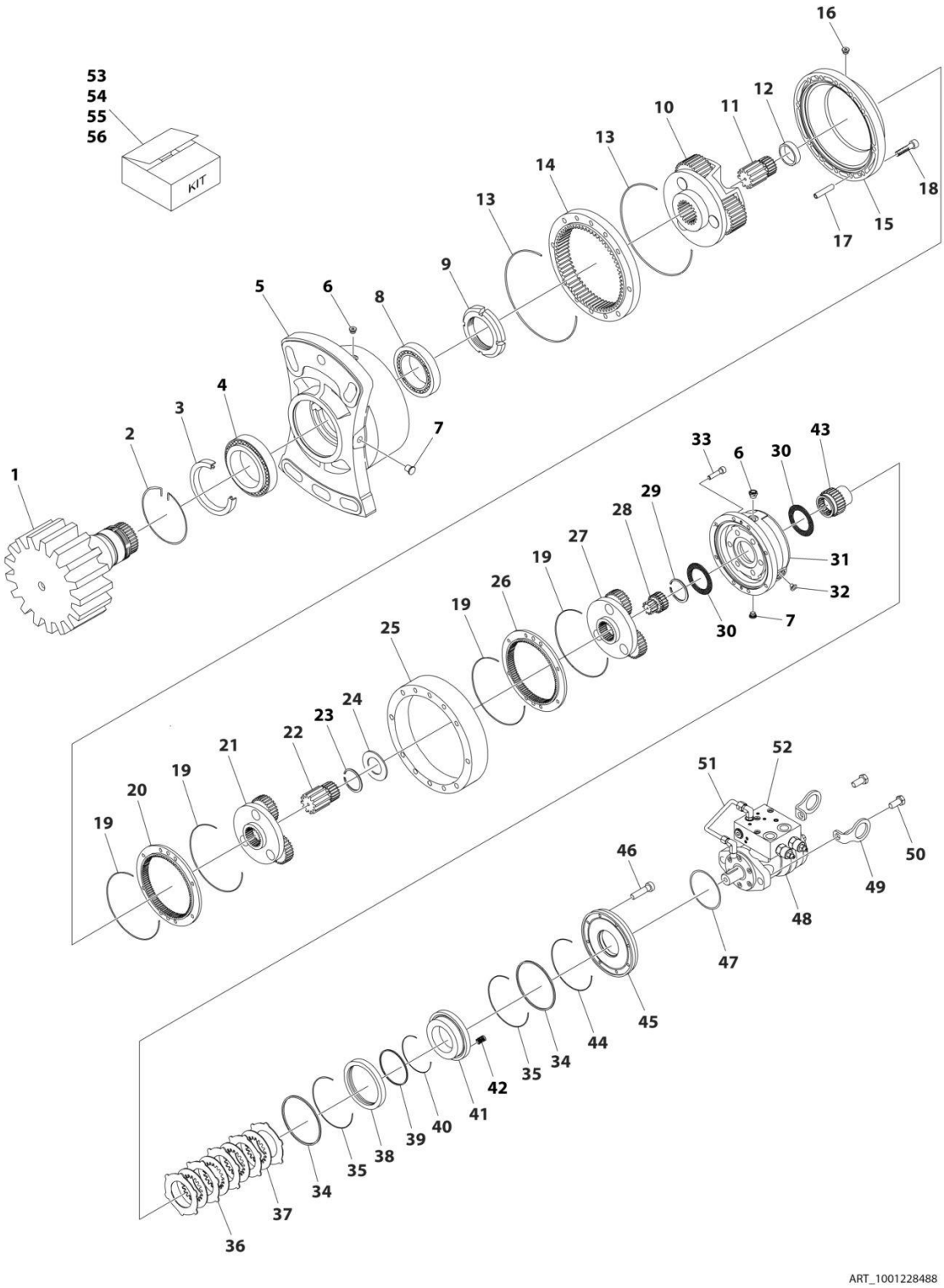

FIGURE 2-11. SWING MOTOR/HUB ASSEMBLY

ITEM	PART NUMBER	QTY	DESCRIPTION	REV
	1001228488	Ref	SWING MOTOR/HUB ASSEMBLY	B
1	See Note	NSS	Shaft (Note: Use Item 56)	
2	70004467	1	Ring	
3	See Note	NSS	Seal, Oil (Note: Use Item 53)	
4	See Note	NSS	Bearing (Note: Use Item 55)	
5	See Note	NSS	Support, Output (Note: Not Available for Purchase)	
6	70002057	5	Plug with O-Ring	
7	70004469	2	Plug with O-Ring	
8	See Note	NSS	Bearing (Note: Use Item 55)	
9	See Note	NSS	Nut, Ring (Note: Use Item 56)	
10	70006986	1	Reduction, Gear - Complete	
11	70006987	1	Pinion	
12	70004477	1	Spacer	
13	See Note	NSS	O-Ring (Note: Use Item 53)	
14	70004474	1	Ring, Planetary	
15	70006988	1	Spacer	
16	70002057	2	Plug with O-Ring	
17	70006989	4	Pin, Spring	
18	70004480	8	Capscrew M10 x 55	
19	See Note	NSS	O-Ring (Note: Use Item 53)	
20	70006990	1	Ring, Planetary	
21	70006991	1	Reduction, Gear - Complete	
22	70006992	1	Pinion	
23	70002032	1	Ring	
24	70006993	1	Spacer	
25	70006994	1	Spacer	
26	70004481	1	Ring, Planetary	
27	70006995	1	Reduction, Gear - Complete	
28	70006996	1	Pinion	
29	70006997	1	Ring	
30	70006998	2	Washer	
31	See Note	NSS	Housing, Brake (Note: Not Available for Purchase)	
32	70006999	1	Plug	
33	70007000	8	Capscrew M8 x 90	
34	See Note	NSS	Seal (Note: Use Item 53 or 54)	
35	See Note	NSS	O-Ring (Note: Use Item 53 or 54)	
36	See Note	NSS	Disc, Steel (Note: Use Item 54)	
37	See Note	NSS	Disc (Note: Use Item 54)	
38	70005317	1	Spacer	
39	See Note	NSS	Seal (Note: Use Item 53 or 54)	
40	See Note	NSS	O-Ring (Note: Use Item 53 or 54)	
41	70005318	1	Piston, Brake	
42	See Note	NSS	Spring, Brake (Note: Use Item 54)	
43	70007001	1	Shaft, Input	
44	See Note	NSS	O-Ring (Note: Use Item 53 or 54)	
45	70007002	1	Cover	
46	70007003	8	Screw M6 x 25	
47	See Note	NSS	O-Ring (Note: Use Item 53)	
48	70007009	1	Motor	
48	70007011	1	Seal Kit	

SECTION 2 - TURNTABLE

ITEM	PART NUMBER	QTY	DESCRIPTION	REV
49	See Note	NSS	Lug, Lifting (Note: Not Available for Purchase)	
50	70004494	2	Capscrew M12 x 35	
51	70007004	1	Brake, Valve Adapter	
52	70007010	1	Valve	
52	70007012	1	Seal Kit	
52	70007013	1	Hardware Kit	
53	70007005	1	Seal Kit – Brake and Hub (Includes Items 3, 13, 19, 34, 35, 39, 40, 44 & 47)	
54	70007006	1	Seal Kit – Brake (Includes Items 34-37, 39, 40, 42 & 44)	
55	70007007	1	Bearing Kit (Includes Items 4 & 8)	
56	70007008	1	Output Shaft Kit (Includes Items 1 & 9)	

FIGURE 2-12. ROTARY COUPLING AND COLLECTOR RING INSTALLATION (WITHOUT SN PLATE ON ROTARY COUPLING)

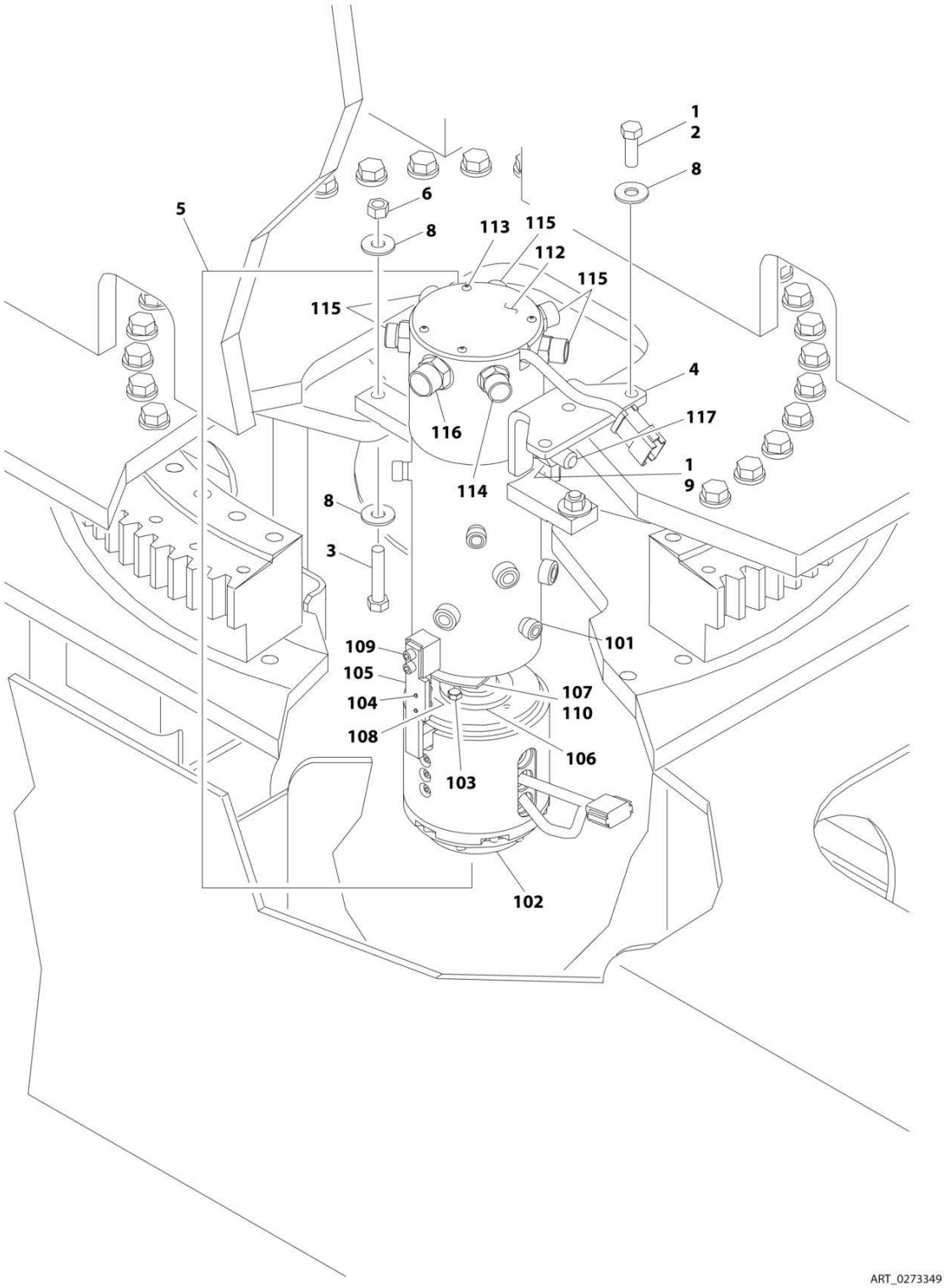

FIGURE 2-12. ROTARY COUPLING AND COLLECTOR RING INSTALLATION (WITHOUT SN PLATE ON ROTARY COUPLING)

ITEM	PART NUMBER	QTY	DESCRIPTION	REV
	0273349	Ref	ROTARY COUPLING AND COLLECTOR RING INSTALLATION	A
1	0100011	AR	Compound, Locking	
2	0641812	3	Bolt 1/2 x 1-1/2	
3	0641820	2	Bolt 1/2 x 2-1/2	
4	0902915	1	Bracket, Swivel	
5	1660256	1	Rotary Coupling and Collector Ring Assembly (See Items 101-117 for Breakdown)	
6	3311805	2	Nut 1/2	
8	4751800	7	Washer 1/2	
9	3322201	2	Nut 3/4	
	1660256	Ref	ROTARY COUPLING AND COLLECTOR RING ASSEMBLY	E
101	7026665	1	Coupling, Rotary	
101	70001123	1	Seal Kit - Coupling	
102	7026029	1	Contactor with Harness, Rotary Circuit (Purchase Pins and Connector Separately)	
103	0641506	4	Bolt 5/16 x 3/4	
104	3931512	2	Capscrew 5/16 x 3/4	
105	70000780	1	Arm, Torque	
106	80334251	1	Adapter	
107	7026030	1	Plate, Cam	
108	7026031	1	Sensor, Proximity	
109	3931008	2	Capscrew #10 x 1/2	
110	7026032	1	Pin, Dowel	
112	1660256	1	Cover	
113	See Note	4	Screw #10 x 3/8 (Note: Not Available - Purchase Locally)	
114	2111212	1	Fitting, Straight	
115	2111010	5	Fitting, Straight	
116	2111012	1	Fitting, Straight	
117	70005456	1	Torque Arm	

FIGURE 2-13. ROTARY COUPLING AND COLLECTOR RING INSTALLATION (WITH SN PLATE ON ROTARY COUPLING)

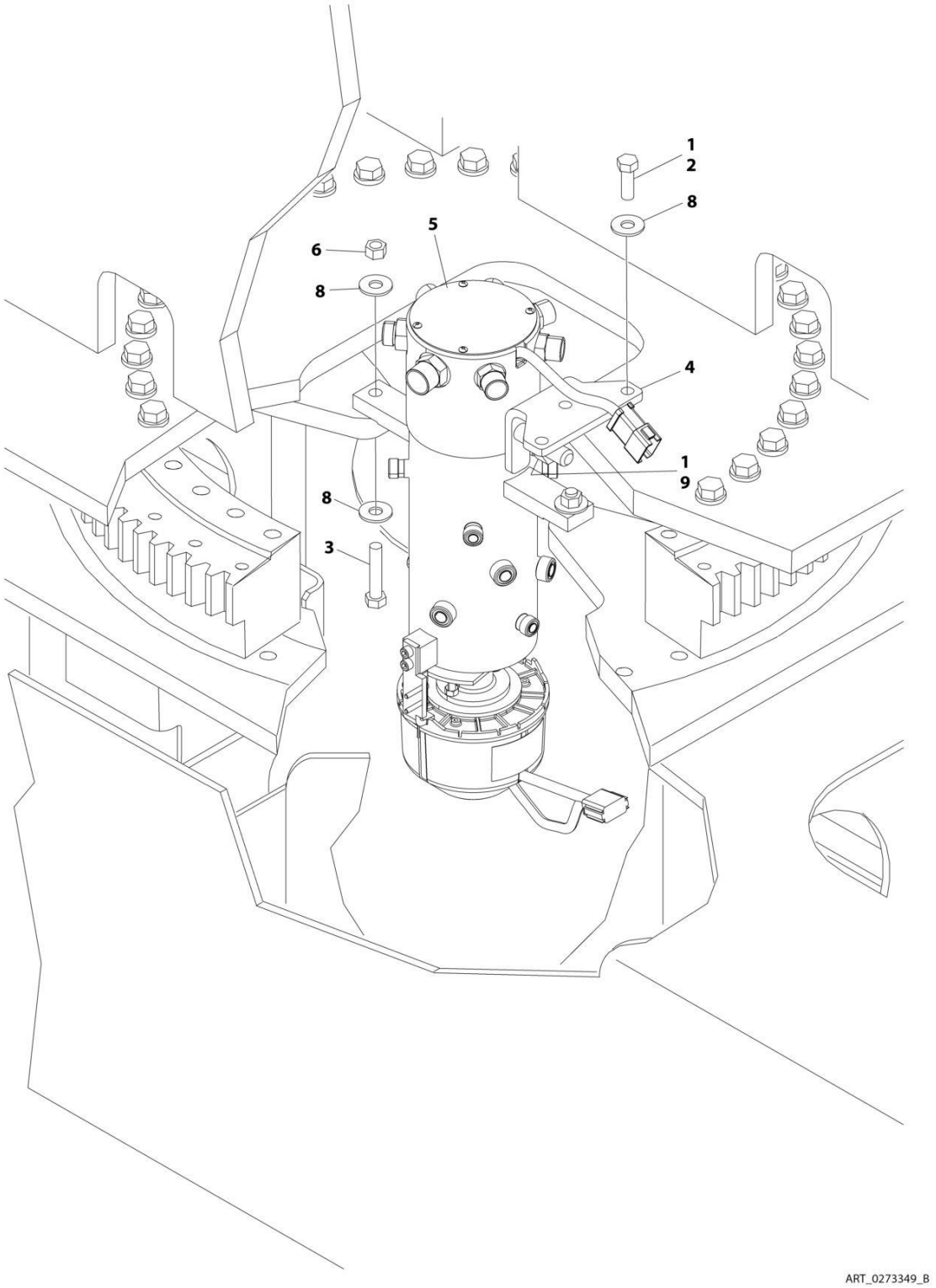

FIGURE 2-13. ROTARY COUPLING AND COLLECTOR RING INSTALLATION (WITH SN PLATE ON ROTARY COUPLING)

ITEM	PART NUMBER	QTY	DESCRIPTION	REV
	0273349	Ref	ROTARY COUPLING AND COLLECTOR RING INSTALLATION	B
1	0100011	AR	Compound, Locking	
2	0641812	3	Bolt 1/2 x 1-1/2	
3	0641820	2	Bolt 1/2 x 2-1/2	
4	0902915	1	Bracket, Swivel	
5	1001278609	1	Rotary Coupling and Collector Ring Assembly (See Separate Breakdown in this Section)	
6	3311805	2	Nut 1/2	
8	4751800	7	Washer 1/2	
9	3322201	2	Nut 3/4	

FIGURE 2-14. ROTARY COUPLING AND COLLECTOR RING ASSEMBLY (WITH SN PLATE ON ROTARY COUPLING)

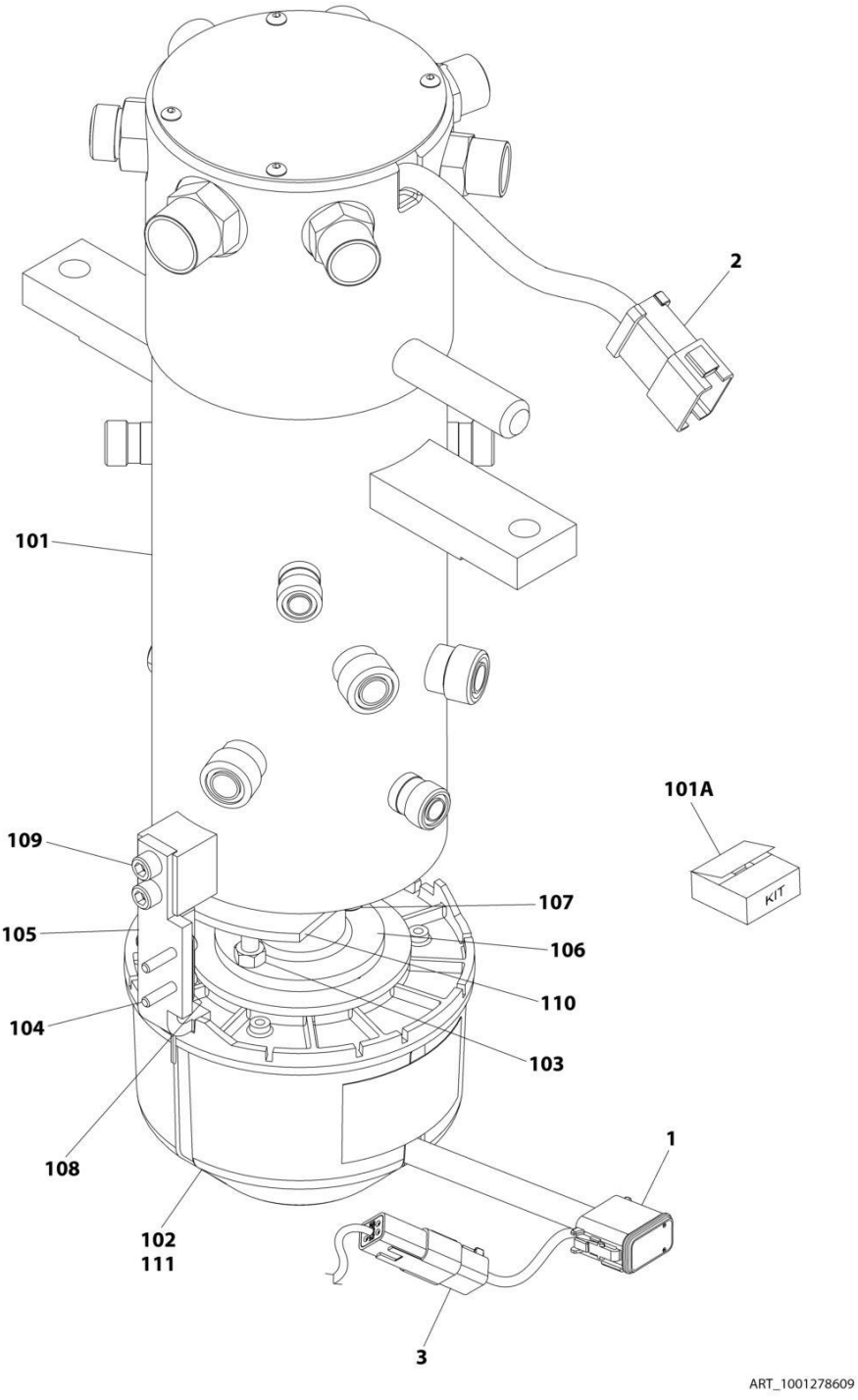

FIGURE 2-14. ROTARY COUPLING AND COLLECTOR RING ASSEMBLY (WITH SN PLATE ON ROTARY COUPLING)

ITEM	PART NUMBER	QTY	DESCRIPTION	REV
	1001278609	Ref	ROTARY COUPLING AND RING ASSEMBLY	A
1	4460836	1	Connector	
1	4460944	3	Socket (Gold Plated)	
1	4460465	7	Socket (Nickel Plated)	
1	4460466	2	Plug	
1	80604016	1	Wedge Lock	
2	4460950	1	Connector	
2	4460943	3	Pin (Gold Plated)	
2	4460464	5	Pin (Nickel Plated)	
2	4460466	4	Plug	
2	80604015	1	Wedge Lock	
3	4460884	1	Connector	
3	80604021	1	Wedge Lock	
101	70008367	1	Rotary Coupling Assembly	
101A	70001123	1	Seal Kit - 70008367 Coupling	
102	70008359	1	Collector Ring Assembly	
103	70008360	2	Nut 5/16	
104	70007510	2	Capscrew #10 x 1/2	
105	70008361	1	Arm	
106	70008362	1	Adaptor, Spool	
107	70008363	2	Bolt 5/16 x 1	
108	70008364	1	Sensor	
109	3931512	2	Capscrew 5/16 x 3/4	
110	70008365	1	Plate, Cam	
111	0100048	AR	Silicone	

FIGURE 2-15. TANK INSTALLATION

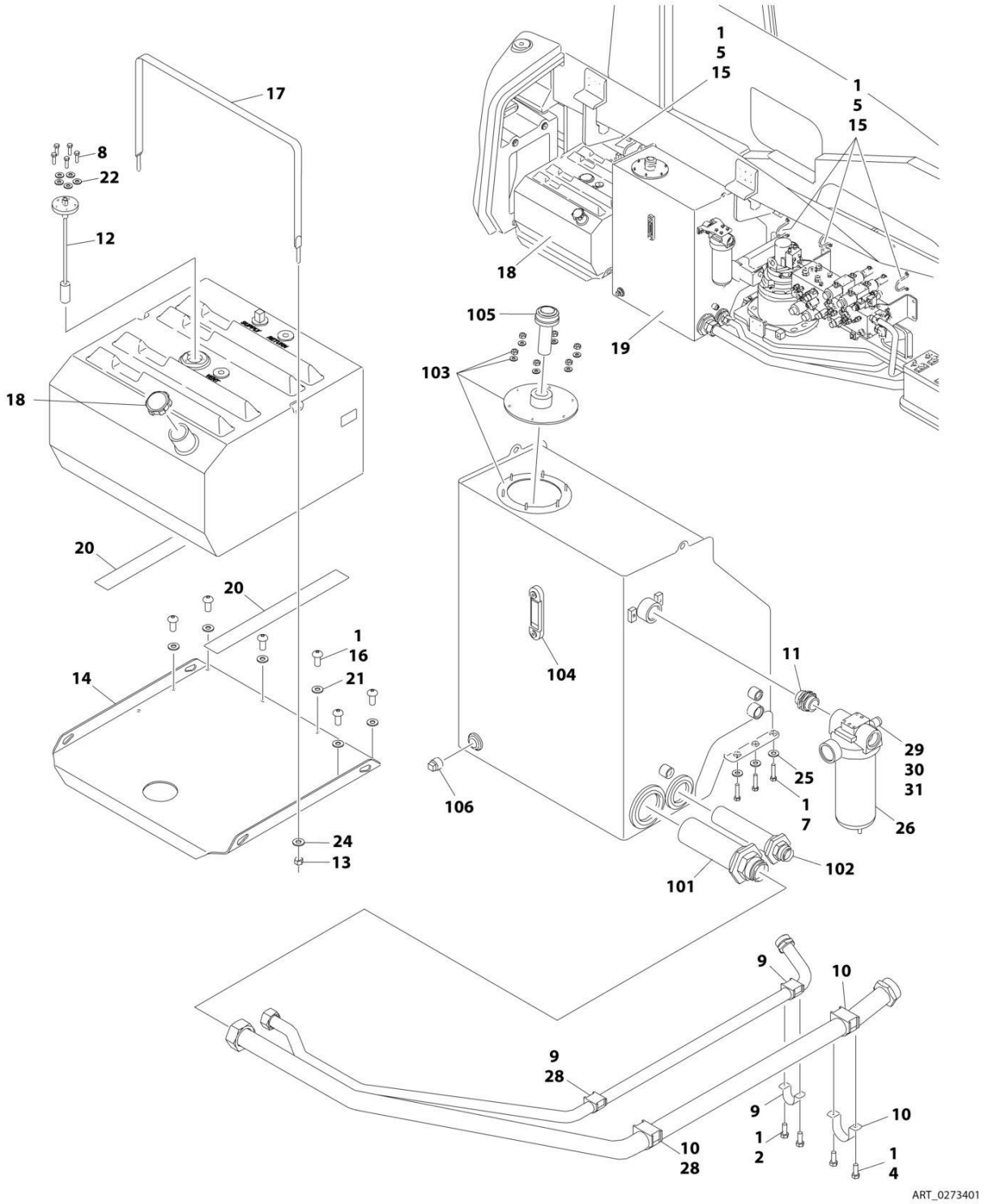

FIGURE 2-15. TANK INSTALLATION

ITEM	PART NUMBER	QTY	DESCRIPTION	REV
	0273401	Ref	TANK INSTALLATION	G
1	0100011	AR	Compound, Locking	
2	0641408	2	Bolt 1/4 x 1	
4	0641508	2	Bolt 5/16 x 1	
5	0641604	12	Bolt 3/8 x 1/2	
7	0641615	6	Bolt 3/8 x 1-7/8	
8	0731007	5	Screw, Machine #10 x 7/8	
9	1320322	2	Clamp	
10	1320323	2	Clamp	
11	2220893	1	Fitting, Adapter	
12	2420191	1	Gauge, Fuel	
12	3960525	1	Gasket	
13	3311601	2	Nut 3/8	
14	3574494	1	Tray	
15	3841340	8	Loop, Hose	
16	3900232	6	Screw 3/8 x 1-1/4	
17	4240139	1	Strap, Tank	
18	1001160567	1	Tank, Fuel	
18	70004414	1	Cap	
18	7020043	1	Tube, Pick up	
19	4400462	1	Tank, Hydraulic Oil (See Items 101-106 for Breakdown)	
20	4420038	40 in/1m	Tape	
21	4711600	6	Washer 3/8	
22	4751000	5	Washer #10	
24	4751600	2	Washer 3/8	
25	4891600	6	Washer 3/8	
26	2120167	1	Filter, Return	
26	2120168	1	Element, Filter	
26	7020021	1	Gauge, Pressure	
28	0100081	AR	Loctite #454	
29	0100079	AR	Sealant, Thread	
30	1001119455	1	Fitting, Diagnostic	
31	1001119119	1	Fitting, Adapter	
	4400462	Ref	HYDRAULIC OIL TANK ASSEMBLY	E
101	7026599	1	Strainer, Suction	
102	7026600	1	Strainer, Suction	
103	7024439	1	Cover	
103	7024440	1	Gasket, Cover	
104	7024441	1	Gauge, Sight	
105	7024444	1	Cap, Breather	
105	7024443	1	Neck Assembly	
105	7024445	1	Strainer	
106	7024446	2	Plug, Magnetic	

FIGURE 2-16. HYDRAULIC OIL COOLER INSTALLATION - DEUTZ TD2011 ENGINES WITH REXROTH PUMP (OPTIONAL)

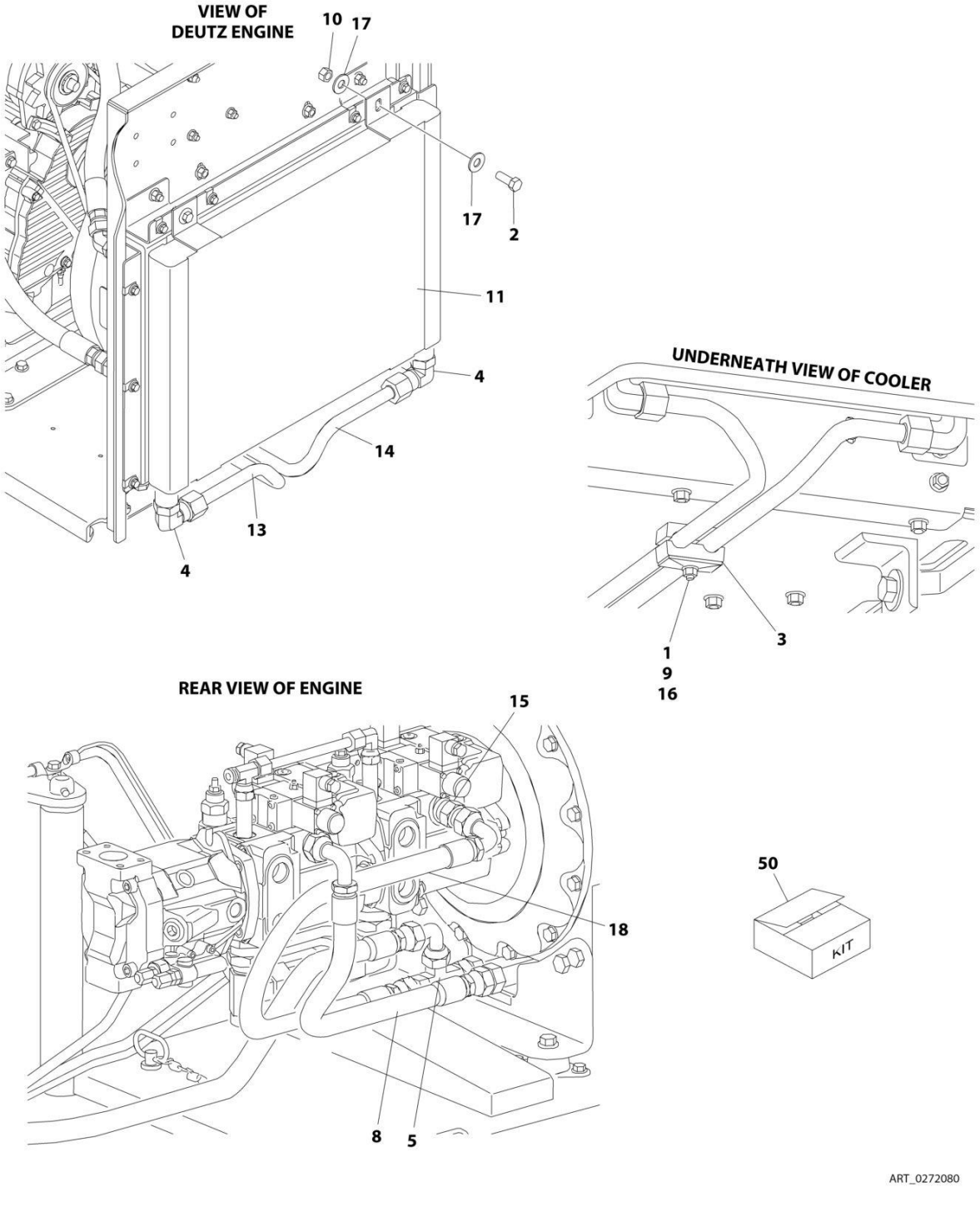

FIGURE 2-16. HYDRAULIC OIL COOLER INSTALLATION - DEUTZ TD2011 ENGINES WITH REXROTH PUMP (OPTIONAL)

ITEM	PART NUMBER	QTY	DESCRIPTION	REV
	0272080	Ref	HYDRAULIC OIL COOLER INSTALLATION - DEUTZ TD2011 ENGINES WITH REXROTH PUMPS (OPTIONAL)	B
		Ref	Note: See Engine Installation for Engine Oil Cooler.	
1	0641520	2	Bolt 5/16 x 2-1/2	
2	0641608	4	Bolt 3/8 x 1	
3	1320162	2	Clamp, Hose	
4	2131212	2	Fitting, Elbow	
5	2170712	1	Fitting, Tee	
8	2753778	1	Hose	
9	3311505	2	Nut 5/16	
10	3311605	4	Nut 3/8	
11	3620034	1	Cooler, Hydraulic Oil	
13	4568426	1	Tube	
14	4568427	1	Tube	
15	4641247	1	Valve, Check	
16	4711500	4	Washer 5/16	
17	4751600	8	Washer 3/8	
18	2753843	1	Hose	
50	1001120564	1	Oil Cooler Add-on Kit (Includes Items 1-18)	

FIGURE 2-17. HYDRAULIC OIL COOLER INSTALLATION - DEUTZ TD2011 ENGINES WITH SAUER PUMP (OPTIONAL)

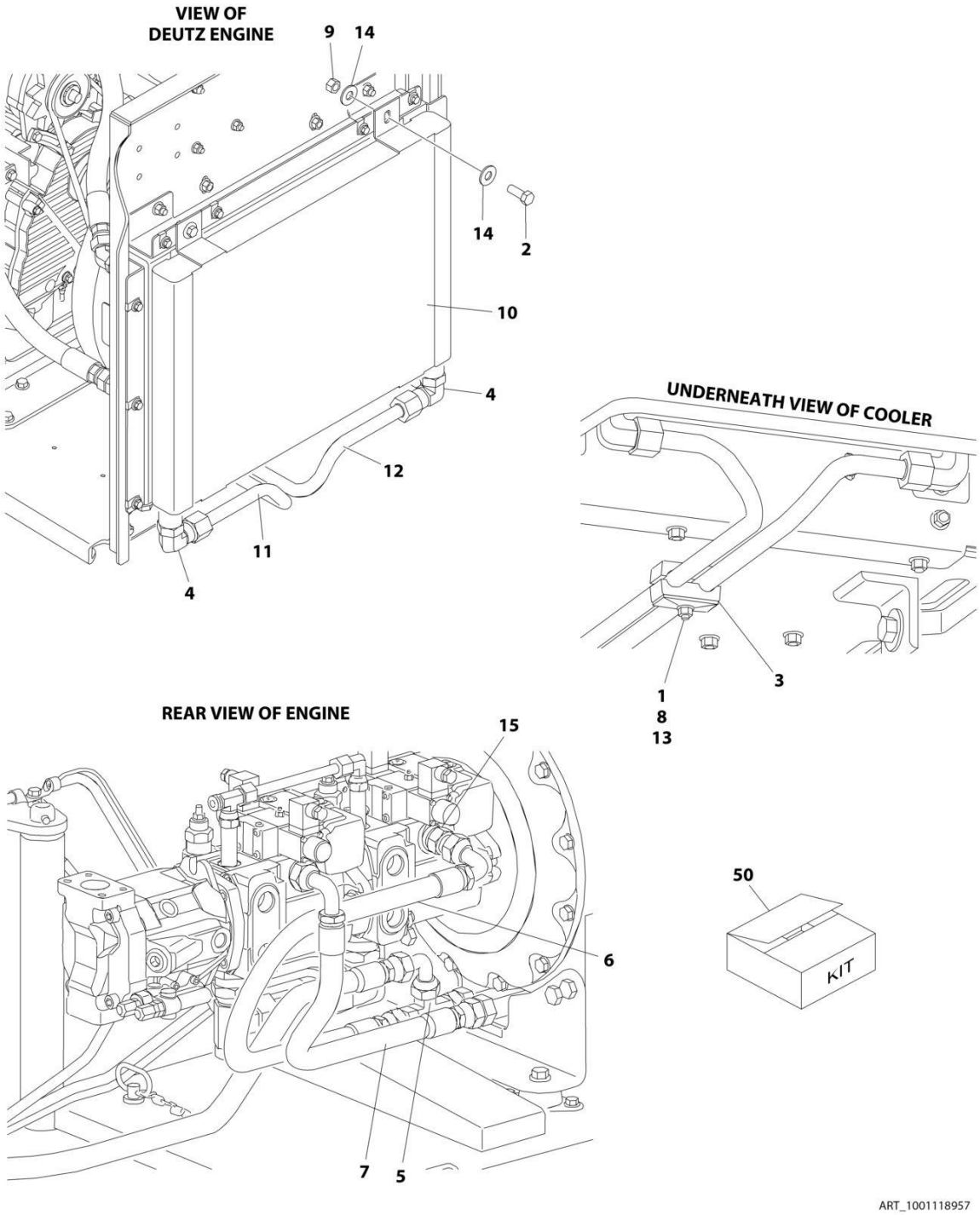

FIGURE 2-17. HYDRAULIC OIL COOLER INSTALLATION - DEUTZ TD2011 ENGINES WITH SAUER PUMP (OPTIONAL)

ITEM	PART NUMBER	QTY	DESCRIPTION	REV
	1001118957	Ref	HYDRAULIC OIL COOLER INSTALLATION - DEUTZ TD2011 ENGINES WITH SAUER PUMPS (OPTIONAL)	B
		Ref	Note: See Engine Installation for Engine Oil Cooler.	
1	0641520	2	Bolt 5/16 x 2-1/2	
2	0641608	4	Bolt 3/8 x 1	
3	1320162	2	Clamp, Hose	
4	2131212	2	Fitting, Elbow	
5	2170712	1	Fitting, Tee	
6	2753778	1	Hose	
7	2753999	1	Hose	
8	3311505	2	Nut 5/16	
9	3311605	4	Nut 3/8	
10	3620034	1	Cooler, Hydraulic Oil	
11	4568426	1	Tube	
12	4568427	1	Tube	
13	4711500	4	Washer 5/16	
14	4751600	8	Washer 3/8	
15	1001109677	1	Valve, Check	
50	1001120564	1	Oil Cooler Add-on Kit Options (Includes Items 1-15):	

FIGURE 2-18. HYDRAULIC OIL COOLER INSTALLATION - DEUTZ TCD2.9L4 ENGINES AND DEUTZ TCD2.9L4 (STAGE V) ENGINES REXROTH PUMP (OPTIONAL)

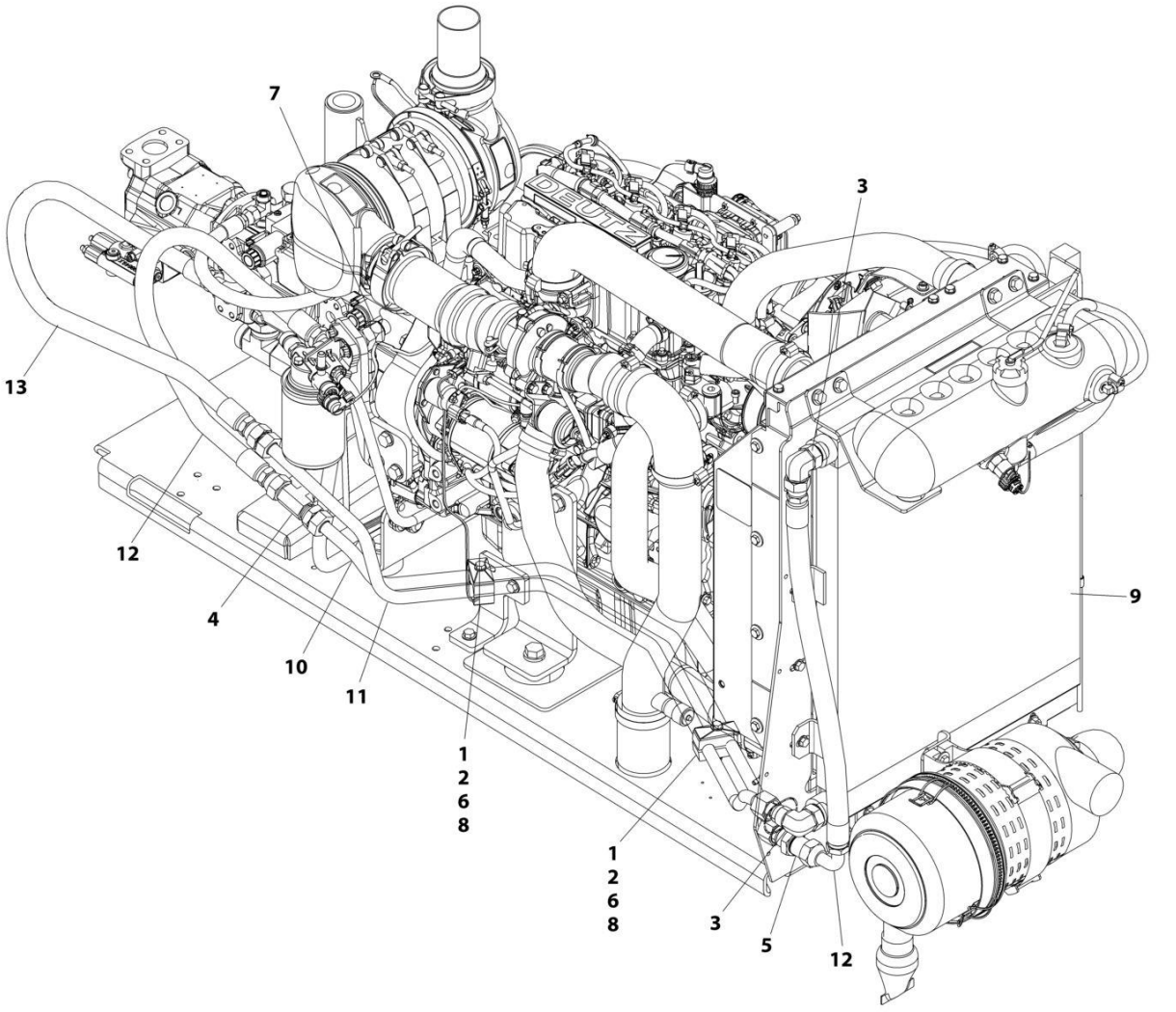

FIGURE 2-18. HYDRAULIC OIL COOLER INSTALLATION - DEUTZ TCD2.9L4 ENGINES AND DEUTZ TCD2.9L4 (STAGE V) ENGINES REXROTH PUMP (OPTIONAL)

ITEM	PART NUMBER	QTY	DESCRIPTION	REV
	1001139494	Ref	HYDRAULIC OIL COOLER INSTALLATION - DEUTZ TCD2.9L4 ENGINES WITH REXROTH PUMPS (OPTIONAL)	F
		Ref	Note: See Engine Installation for Engine Oil Cooler.	
1	0641520	2	Bolt 5/16 x 2-1/2	
2	1320162	2	Clamp, Hose	
3	2131212	2	Fitting, 90	
4	2170712	1	Fitting, Tee	
5	2171112	1	Fitting, Straight	
6	3311505	2	Nut 5/16	
7	4641247	1	Valve	
8	4711500	4	Washer 5/16	
9	1001256859	1	Cooler, Hydraulic Oil	
10	1001139665	1	Tube	
11	1001139666	1	Tube	
12	1001143087	2	Hose	
13	1001143123	1	Hose	

FIGURE 2-19. HYDRAULIC OIL COOLER INSTALLATION - DEUTZ TCD2.9L4 ENGINES AND DEUTZ TCD2.9L4 (STAGE V) ENGINES WITH SAUER PUMP (OPTIONAL)

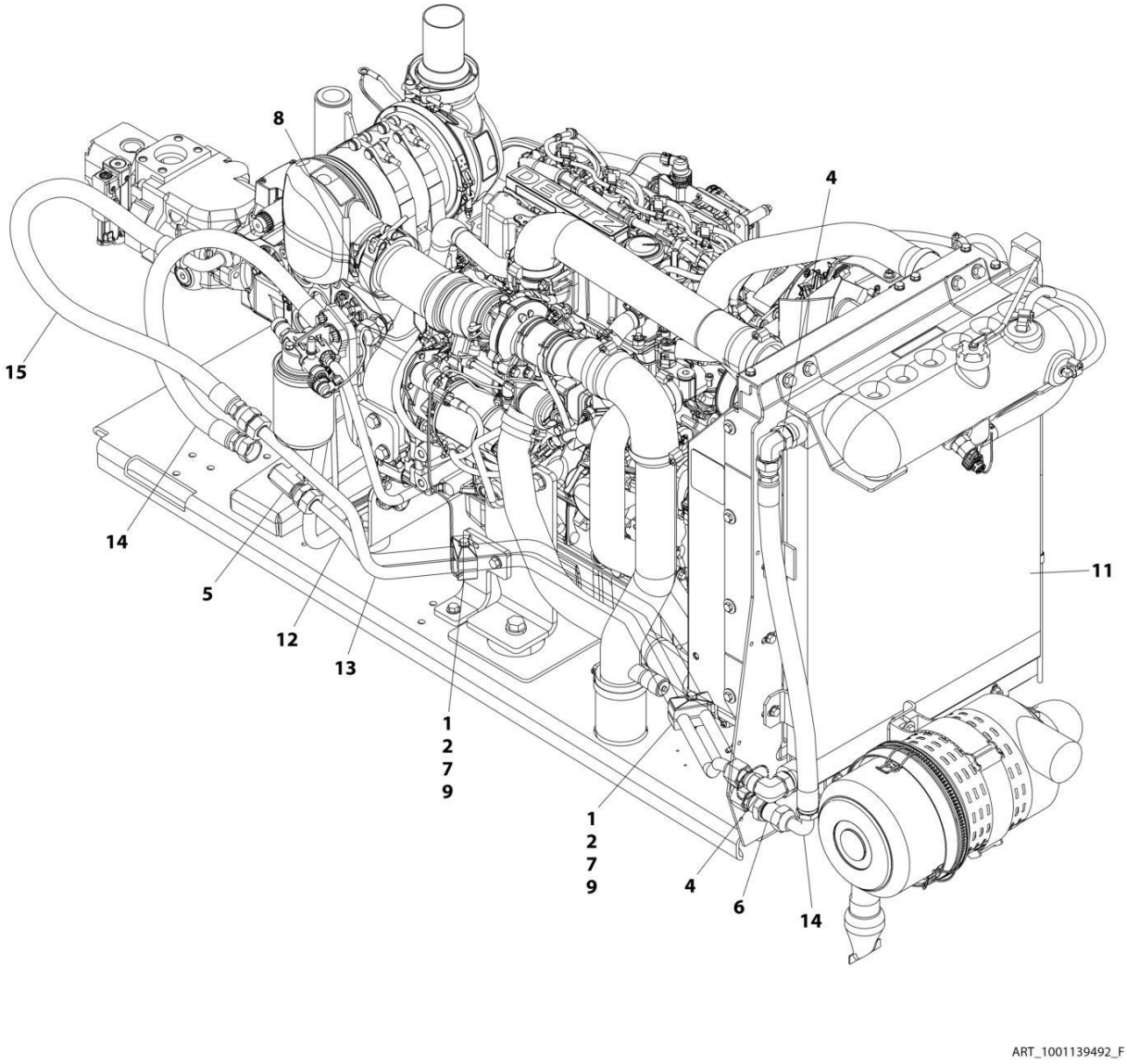

FIGURE 2-19. HYDRAULIC OIL COOLER INSTALLATION - DEUTZ TCD2.9L4 ENGINES AND DEUTZ TCD2.9L4 (STAGE V) ENGINES WITH SAUER PUMP (OPTIONAL)

ITEM	PART NUMBER	QTY	DESCRIPTION	REV
	1001139492	Ref	HYDRAULIC OIL COOLER INSTALLATION - DEUTZ TCD2.9L4 ENGINES WITH SAUER PUMPS (OPTIONAL)	F
		Ref	Note: See Engine Installation for Engine Oil Cooler	
1	0641520	2	Bolt 5/16 x 2-1/2	
2	1320162	2	Clamp, Hose	
4	2131212	2	Fitting, 90	
5	2170712	1	Fitting, Tee	
6	2171112	1	Fitting, Straight	
7	3311505	2	Nut 5/16	
8	1001109677	1	Valve	
9	4711500	4	Washer 5/16	
11	1001256859	1	Cooler, Hydraulic Oil	
12	1001139665	1	Tube	
13	1001139666	1	Tube	
14	1001143087	2	Hose	
15	1001143123	1	Hose	

FIGURE 2-20. GROUND CONTROL BOX INSTALLATION - DEUTZ TD2011 ENGINES WITH REXROTH PUMP (WITHOUT TOWER STOW) (ANSI EXPORT & AUSTRALIAN SPECS)

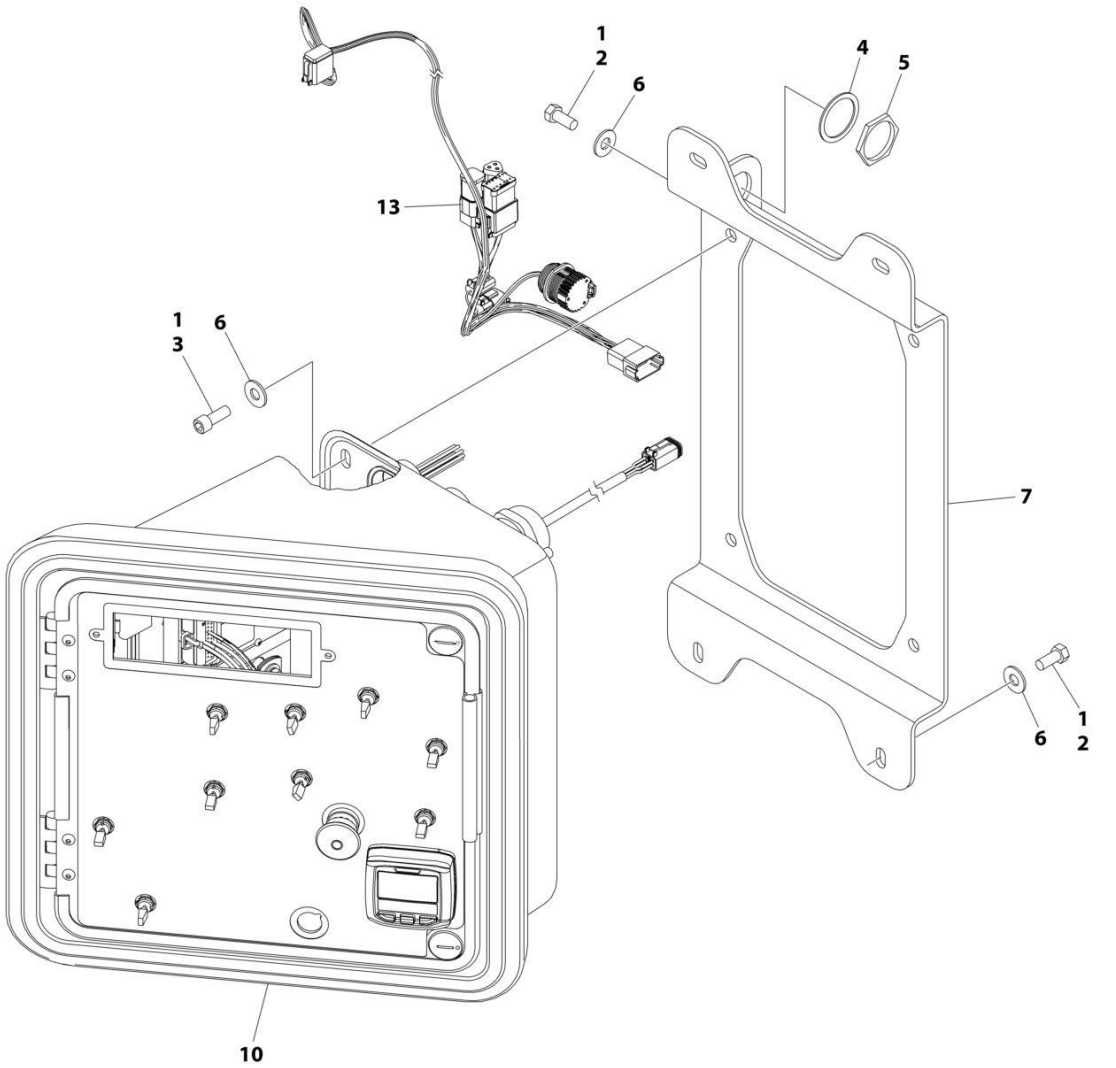

FIGURE 2-20. GROUND CONTROL BOX INSTALLATION - DEUTZ TD2011 ENGINES WITH REXROTH PUMP (WITHOUT TOWER STOW) (ANSI EXPORT & AUSTRALIAN SPECS)

ITEM	PART NUMBER	QTY	DESCRIPTION	REV
	1001243544	Ref	GROUND CONTROL BOX INSTALLATION	D
1	0100011	AR	Compound, Locking	
2	0641607	5	Bolt 3/8 x 7/8	
3	3931616	2	Capscrew 3/8 x 1	
4	4460496	1	Terminal, Washer	
5	4460497	1	Terminal, Nut	
6	4751600	7	Washer 3/8	
7	1001114487	1	Bracket, Mounting	
8	1001119456	2	Harness, Pump Adapter (Not Shown) (See Separate Breakdown in ELECTRICAL Section)	
9	1001119470	1	Harness, Engine (Not Shown) (See Separate Breakdown in ELECTRICAL Section)	
10	1001266935	1	Ground Controls Assembly (See Separate Breakdown in this Section)	
11	4240017	AR	Tie-Strap (Not Shown)	
12	4460234	AR	Mount, Tie-Strap (Not Shown)	
13	1001288110	1	Harness, Diagnostic (See Separate Breakdown in ELECTRICAL Section)	

FIGURE 2-21. GROUND CONTROL BOX INSTALLATION - DEUTZ TD2011 ENGINES WITH REXROTH PUMP (WITH TOWER STOW) (ANSI EXPORT & AUSTRALIAN SPECS)

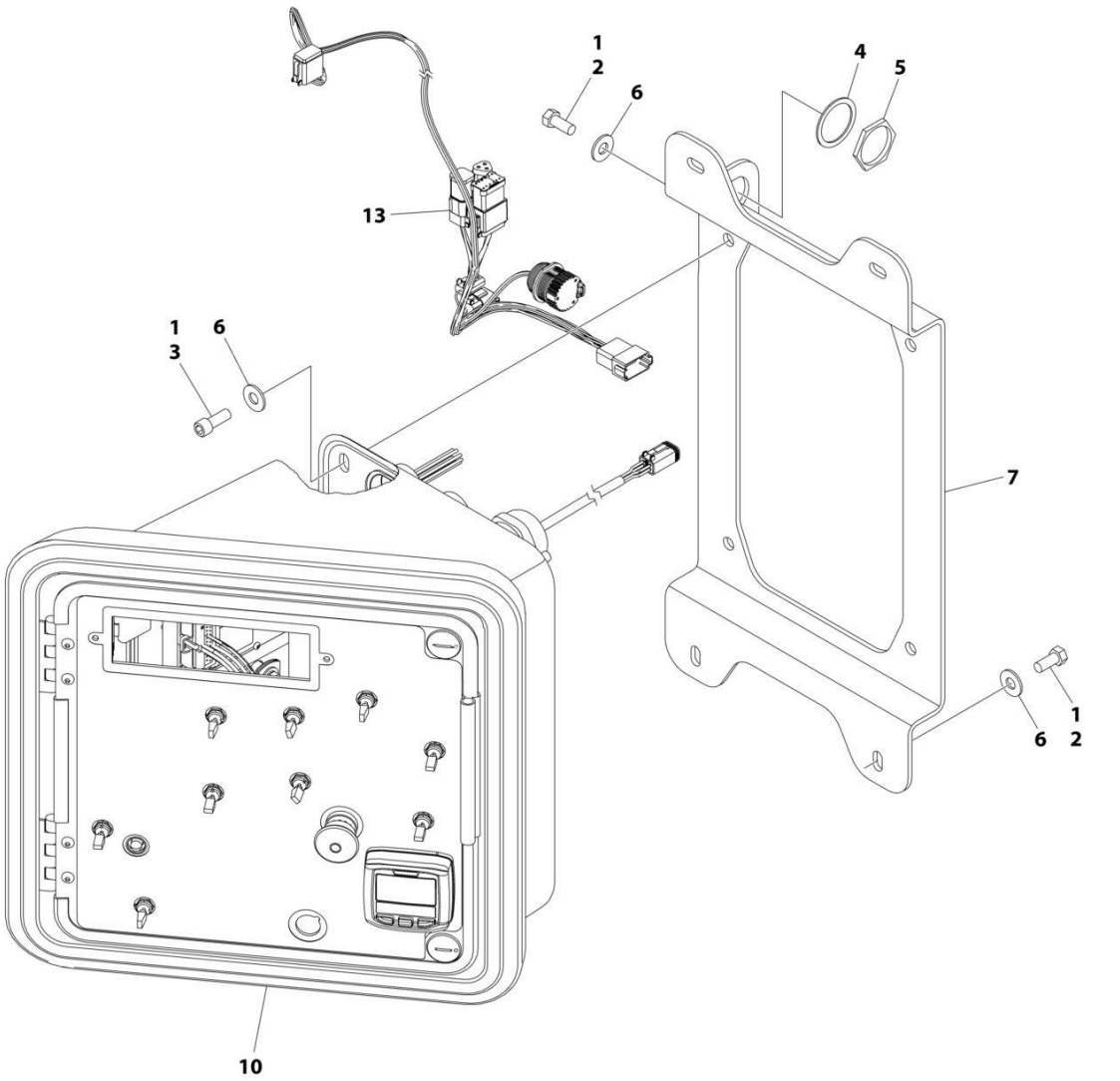

FIGURE 2-21. GROUND CONTROL BOX INSTALLATION - DEUTZ TD2011 ENGINES WITH REXROTH PUMP (WITH TOWER STOW) (ANSI EXPORT & AUSTRALIAN SPECS)

ITEM	PART NUMBER	QTY	DESCRIPTION	REV
	1001267654	Ref	GROUND CONTROL BOX INSTALLATION	C
1	0100011	AR	Compound, Locking	
2	0641607	5	Bolt 3/8 x 7/8	
3	3931616	2	Capscrew 3/8 x 1	
4	4460496	1	Terminal, Washer	
5	4460497	1	Terminal, Nut	
6	4751600	7	Washer 3/8	
7	1001114487	1	Bracket, Mounting	
8	1001119456	2	Harness, Pump Adapter (Not Shown) (See Separate Breakdown in ELECTRICAL Section)	
9	1001119470	1	Harness, Engine (Not Shown) (See Separate Breakdown in ELECTRICAL Section)	
10	1001265867	1	Ground Controls Assembly (See Separate Breakdown in this Section)	
11	4240017	AR	Tie-Strap (Not Shown)	
12	4460234	AR	Mount, Tie-Strap (Not Shown)	
13	1001288110	1	Harness, Diagnostic (See Separate Breakdown in ELECTRICAL Section)	

FIGURE 2-22. GROUND CONTROL BOX INSTALLATION - DEUTZ TD2011 ENGINES WITH SAUER PUMP (WITHOUT TOWER STOW) (ANSI EXPORT & AUSTRALIAN SPECS)

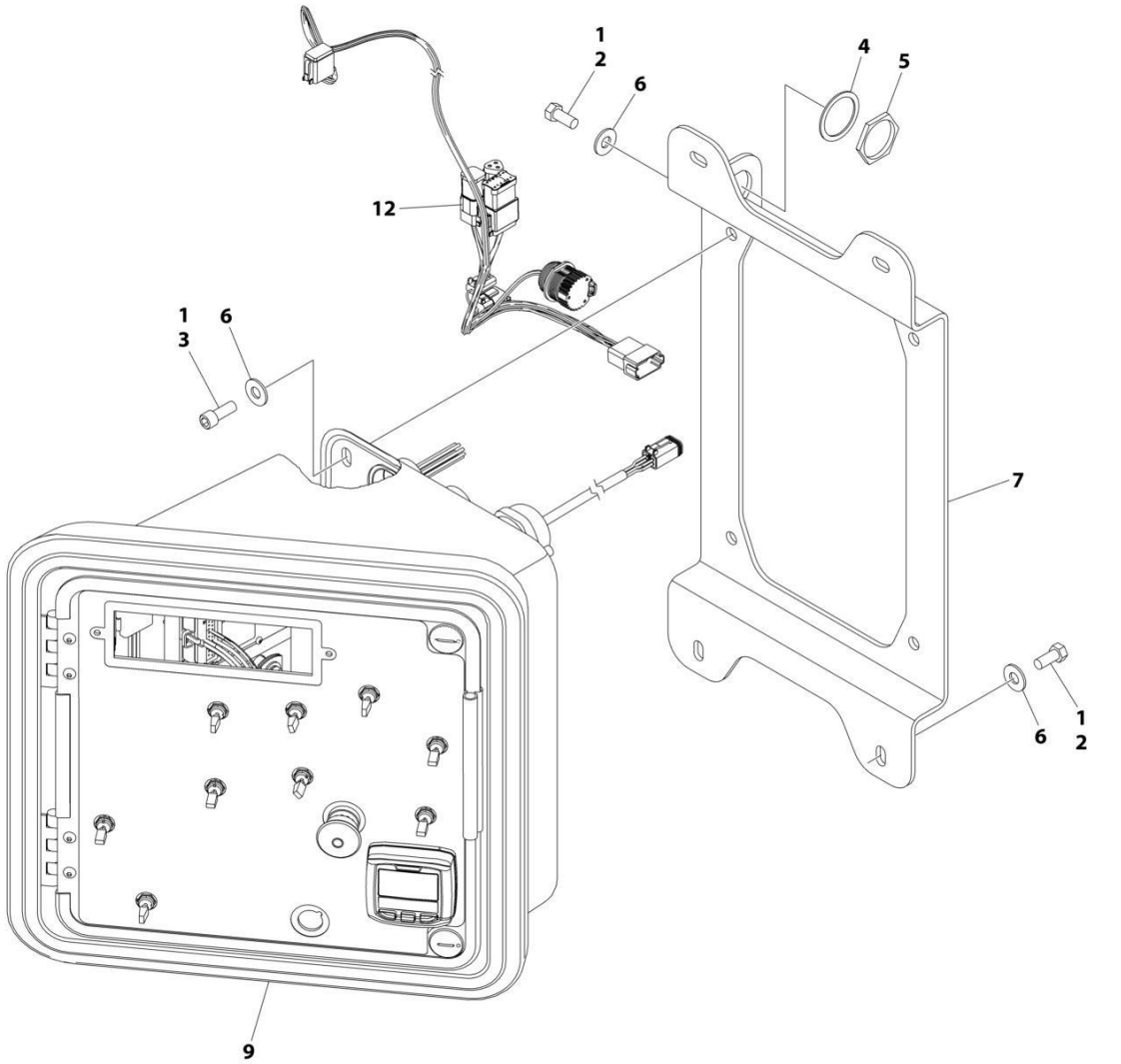

FIGURE 2-22. GROUND CONTROL BOX INSTALLATION - DEUTZ TD2011 ENGINES WITH SAUER PUMP (WITHOUT TOWER STOW) (ANSI EXPORT & AUSTRALIAN SPECS)

ITEM	PART NUMBER	QTY	DESCRIPTION	REV
	1001243583	Ref	GROUND CONTROL BOX INSTALLATION	D
1	0100011	AR	Compound, Locking	
2	0641607	5	Bolt 3/8 x 7/8	
3	3931616	2	Capscrew 3/8 x 1	
4	4460496	1	Terminal, Washer	
5	4460497	1	Terminal, Nut	
6	4751600	7	Washer 3/8	
7	1001114487	1	Bracket, Mounting	
8	1001119470	1	Harness, Engine (Not Shown) (See Separate Breakdown in this Section)	
9	1001266935	1	Ground Controls Assembly (See Separate Breakdown in this Section)	
10	4240017	AR	Tie-Strap (Not Shown)	
11	4460234	AR	Mount, Tie-Strap (Not Shown)	
12	1001288110	1	Harness, Diagnostic (See Separate Breakdown in ELECTRICAL Section)	

FIGURE 2-23. GROUND CONTROL BOX INSTALLATION - DEUTZ TD2011 ENGINES WITH SAUER PUMP (WITH TOWER STOW) (CE & UK CA SPECS) (LRC)

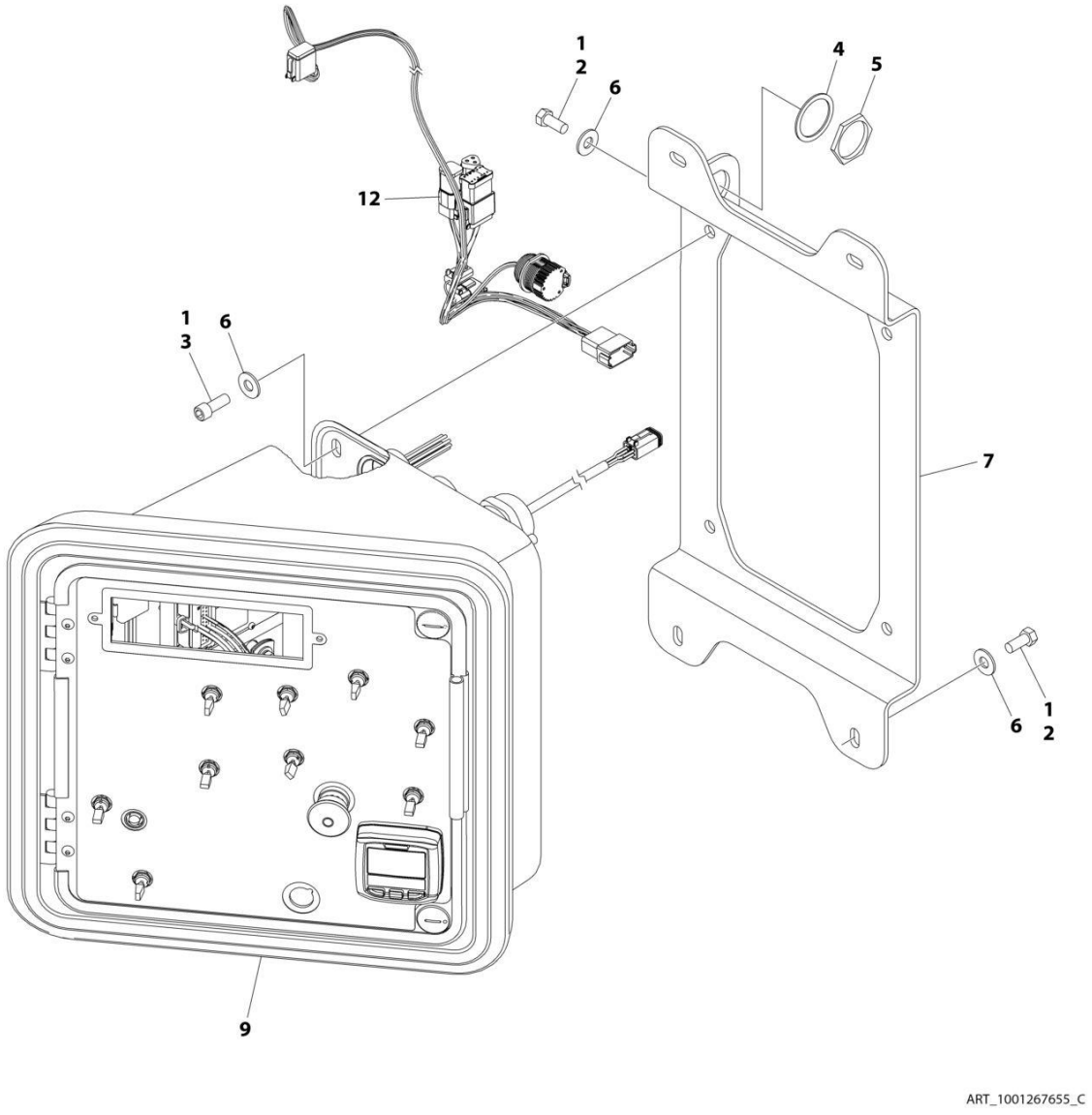

FIGURE 2-23. GROUND CONTROL BOX INSTALLATION - DEUTZ TD2011 ENGINES WITH SAUER PUMP (WITH TOWER STOW) (CE & UK CA SPECS) (LRC)

ITEM	PART NUMBER	QTY	DESCRIPTION	REV
	1001267655	Ref	GROUND CONTROL BOX INSTALLATION	C
1	0100011	AR	Compound, Locking	
2	0641607	5	Bolt 3/8 x 7/8	
3	3931616	2	Capscrew 3/8 x 1	
4	4460496	1	Terminal, Washer	
5	4460497	1	Terminal, Nut	
6	4751600	7	Washer 3/8	
7	1001114487	1	Bracket, Mounting	
8	1001119470	1	Harness, Engine (Not Shown) (See Separate Breakdown in ELECTRICAL Section)	
9	1001265867	1	Ground Controls Assembly (See Separate Breakdown in this Section)	
10	4240017	AR	Tie-Strap (Not Shown)	
11	4460234	AR	Mount, Tie-Strap (Not Shown)	
12	1001288110	1	Harness, Diagnostic (See Separate Breakdown in ELECTRICAL Section)	

FIGURE 2-24. GROUND CONTROL BOX INSTALLATION - DEUTZ TD2011 ENGINES WITH REXROTH PUMPS (WITHOUT TOWER STOW) (CE & UK CA SPECS) (LRC)

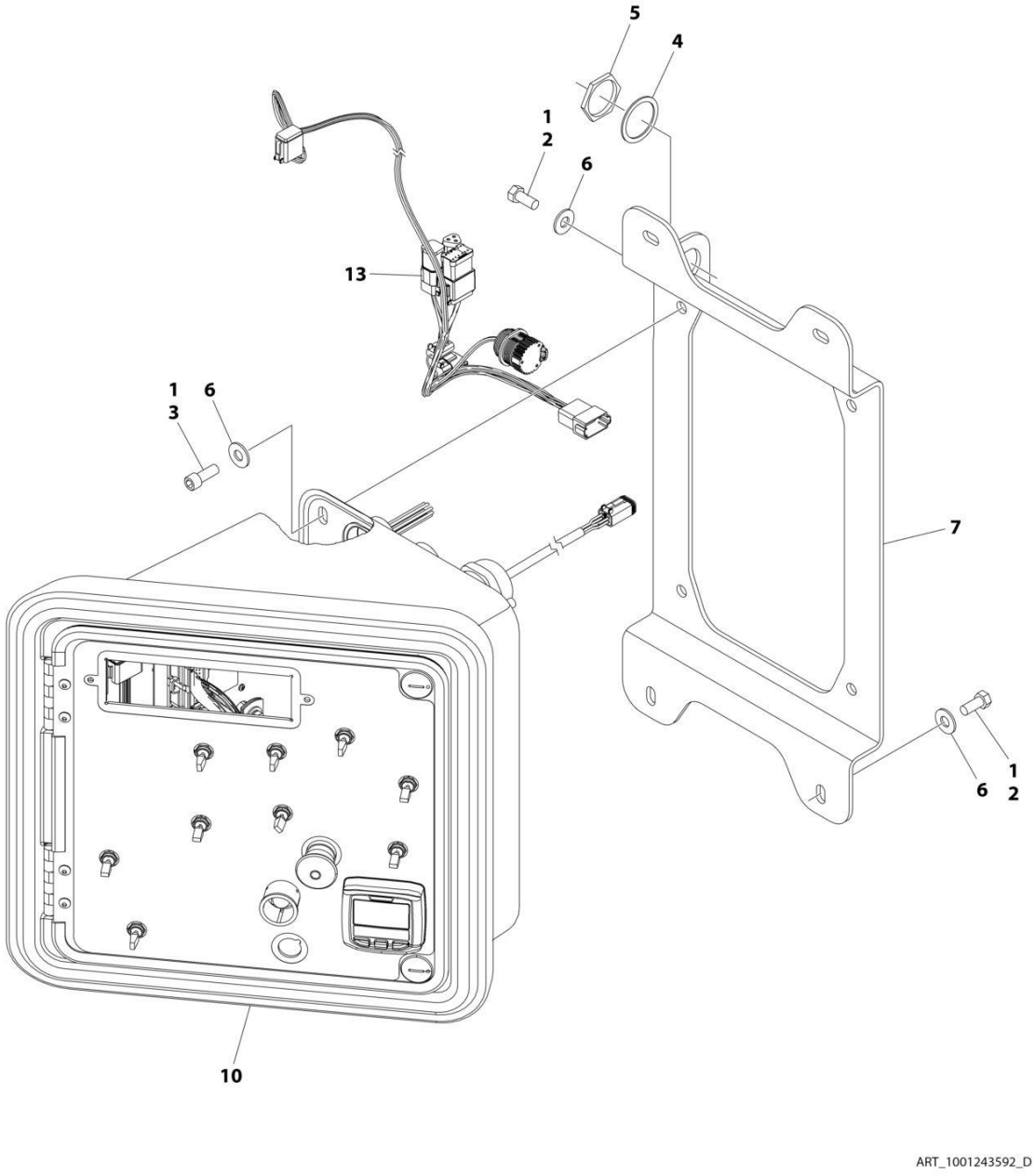

FIGURE 2-24. GROUND CONTROL BOX INSTALLATION - DEUTZ TD2011 ENGINES WITH REXROTH PUMPS (WITHOUT TOWER STOW) (CE & UK CA SPECS) (LRC)

ITEM	PART NUMBER	QTY	DESCRIPTION	REV
	1001243592	Ref	GROUND CONTROL BOX INSTALLATION	D
1	0100011	AR	Compound, Locking	
2	0641607	5	Bolt 3/8 x 7/8	
3	3931616	2	Capscrew 3/8 x 1	
4	4460496	1	Terminal, Washer	
5	4460497	1	Terminal, Nut	
6	4751600	7	Washer 3/8	
7	1001114487	1	Bracket, Mounting	
8	1001119456	2	Harness, Pump Adapter (Not Shown) (See Separate Breakdown in ELECTRICAL Section)	
9	1001119470	1	Harness, Engine (Not Shown) (See Separate Breakdown in this Section)	
10	1001266936	1	Ground Controls Assembly (See Separate Breakdown in this Section)	
11	4240017	AR	Tie-Strap (Not Shown)	
12	4460234	AR	Mount, Tie-Strap (Not Shown)	
13	1001288110	1	Harness, Diagnostic (See Separate Breakdown in ELECTRICAL Section)	

FIGURE 2-25. GROUND CONTROL BOX INSTALLATION - DEUTZ TD2011 ENGINES WITH REXROTH PUMP (WITH TOWER STOW) (ANSI EXPORT & AUSTRALIAN SPECS)

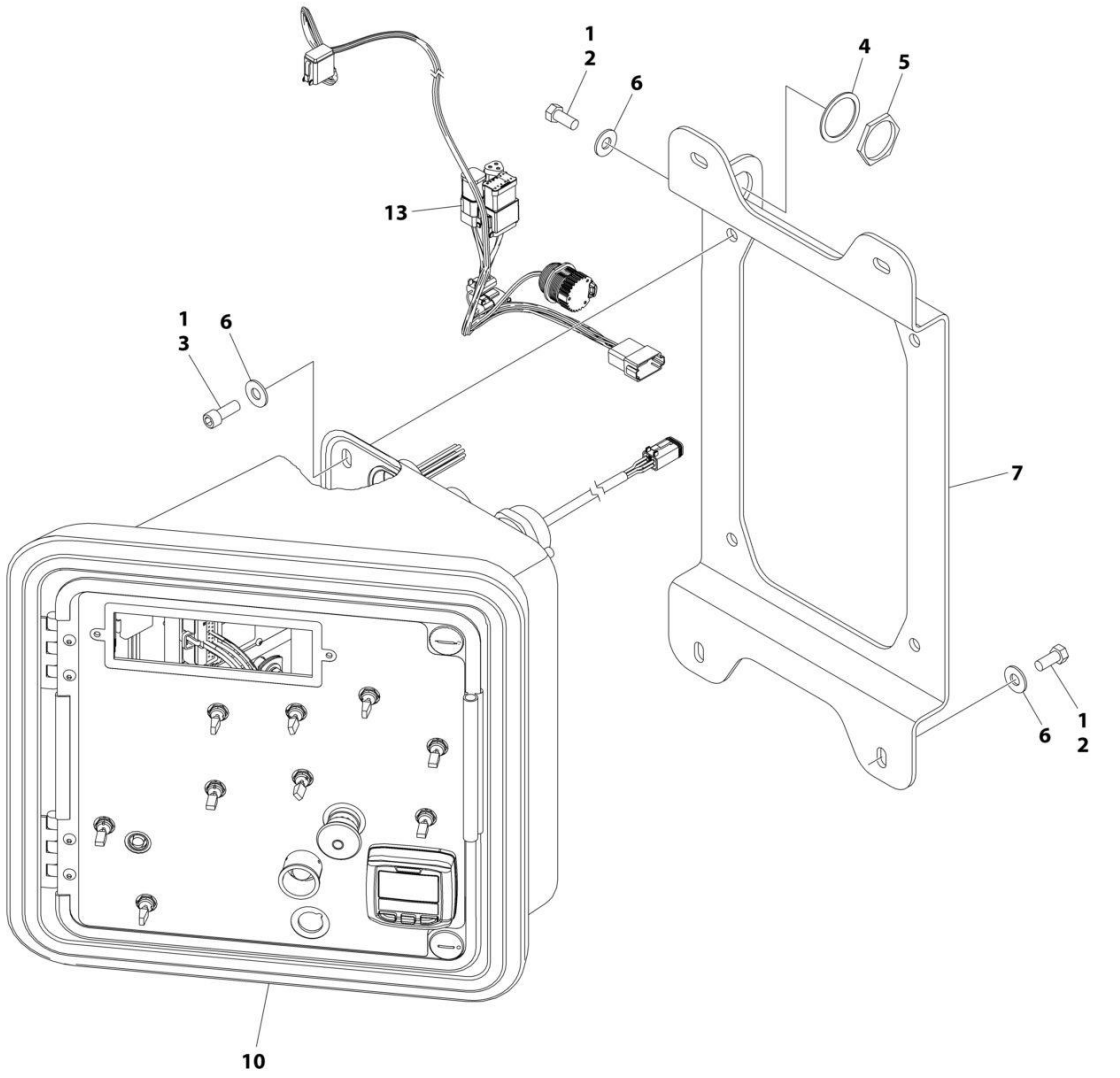

FIGURE 2-25. GROUND CONTROL BOX INSTALLATION - DEUTZ TD2011 ENGINES WITH REXROTH PUMP (WITH TOWER STOW) (ANSI EXPORT & AUSTRALIAN SPECS)

ITEM	PART NUMBER	QTY	DESCRIPTION	REV
	1001267656	Ref	GROUND CONTROL BOX INSTALLATION	C
1	0100011	AR	Compound, Locking	
2	0641607	5	Bolt 3/8 x 7/8	
3	3931616	2	Capscrew 3/8 x 1	
4	4460496	1	Terminal, Washer	
5	4460497	1	Terminal, Nut	
6	4751600	7	Washer 3/8	
7	1001114487	1	Bracket, Mounting	
8	1001119456	2	Harness, Pump Adapter (Not Shown) (See Separate Breakdown in ELECTRICAL Section)	
9	1001119470	1	Harness, Engine (Not Shown) (See Separate Breakdown in this Section)	
10	1001265868	1	Ground Controls Assembly (See Separate Breakdown in this Section)	
11	4240017	AR	Tie-Strap (Not Shown)	
12	4460234	AR	Mount, Tie-Strap (Not Shown)	
13	1001288110	1	Harness, Diagnostic (See Separate Breakdown in ELECTRICAL Section)	

FIGURE 2-26. GROUND CONTROL BOX INSTALLATION - DEUTZ TD2011 ENGINES WITH SAUER PUMPS (WITHOUT TOWER STOW) (CE & UK CA SPECS) (LRC)

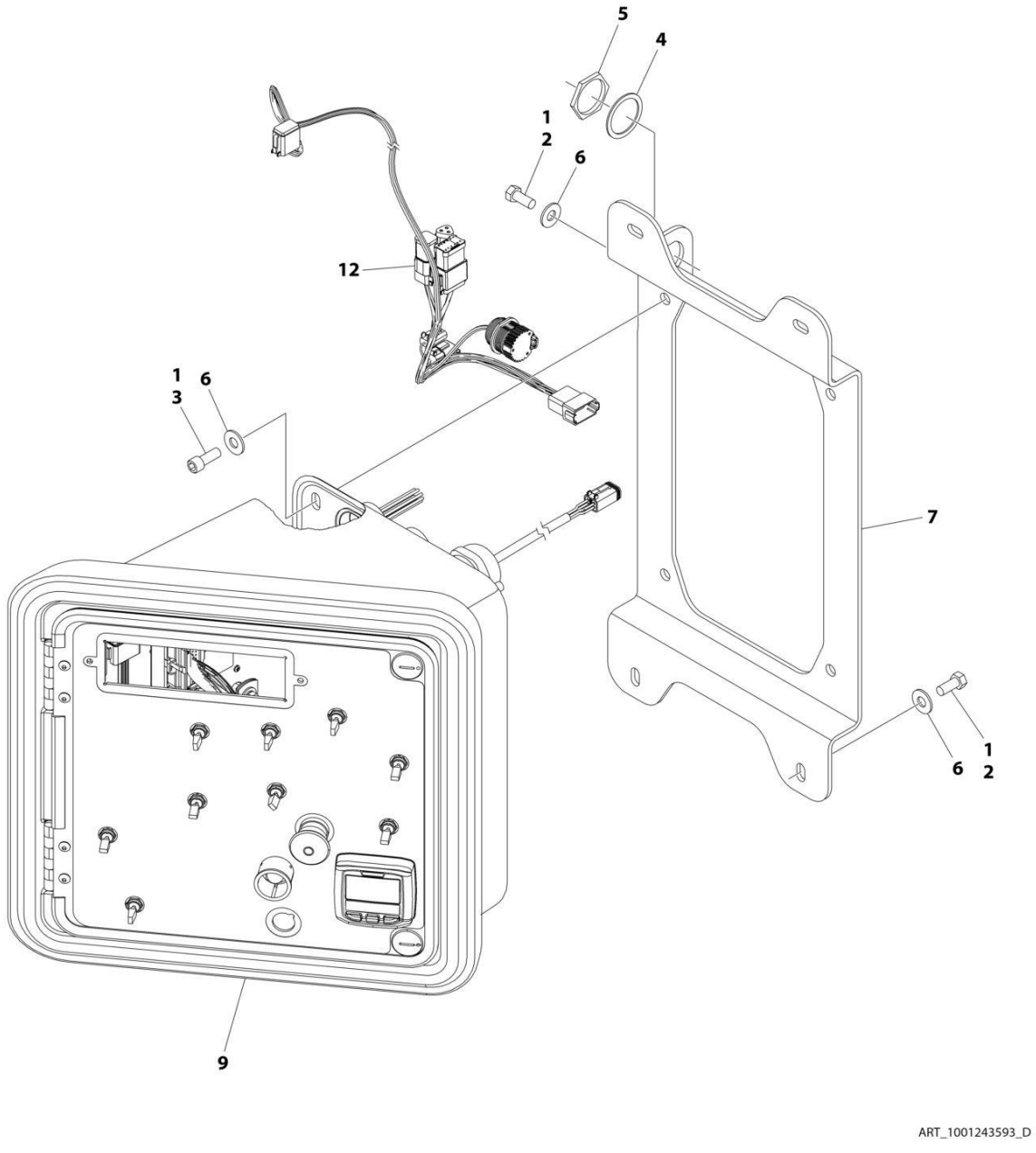

FIGURE 2-26. GROUND CONTROL BOX INSTALLATION - DEUTZ TD2011 ENGINES WITH SAUER PUMPS (WITHOUT TOWER STOW) (CE & UK CA SPECS) (LRC)

ITEM	PART NUMBER	QTY	DESCRIPTION	REV
	1001243593	Ref	GROUND CONTROL BOX INSTALLATION	D
1	0100011	AR	Compound, Locking	
2	0641607	5	Bolt 3/8 x 7/8	
3	3931616	2	Capscrew 3/8 x 1	
4	4460496	1	Terminal, Washer	
5	4460497	1	Terminal, Nut	
6	4751600	7	Washer 3/8	
7	1001114487	1	Bracket, Mounting	
8	1001119470	1	Harness, Engine (Not Shown) (See Separate Breakdown in this Section)	
9	1001266936	1	Ground Controls Assembly (See Separate Breakdown in this Section)	
10	4240017	AR	Tie-Strap (Not Shown)	
11	4460234	AR	Mount, Tie-Strap (Not Shown)	
12	1001288110	1	Harness, Diagnostic (See Separate Breakdown in ELECTRICAL Section)	

FIGURE 2-27. GROUND CONTROL BOX INSTALLATION - DEUTZ TD2011 ENGINES WITH SAUER PUMP (WITH TOWER STOW) (CE & UK CA SPECS) (LRC)

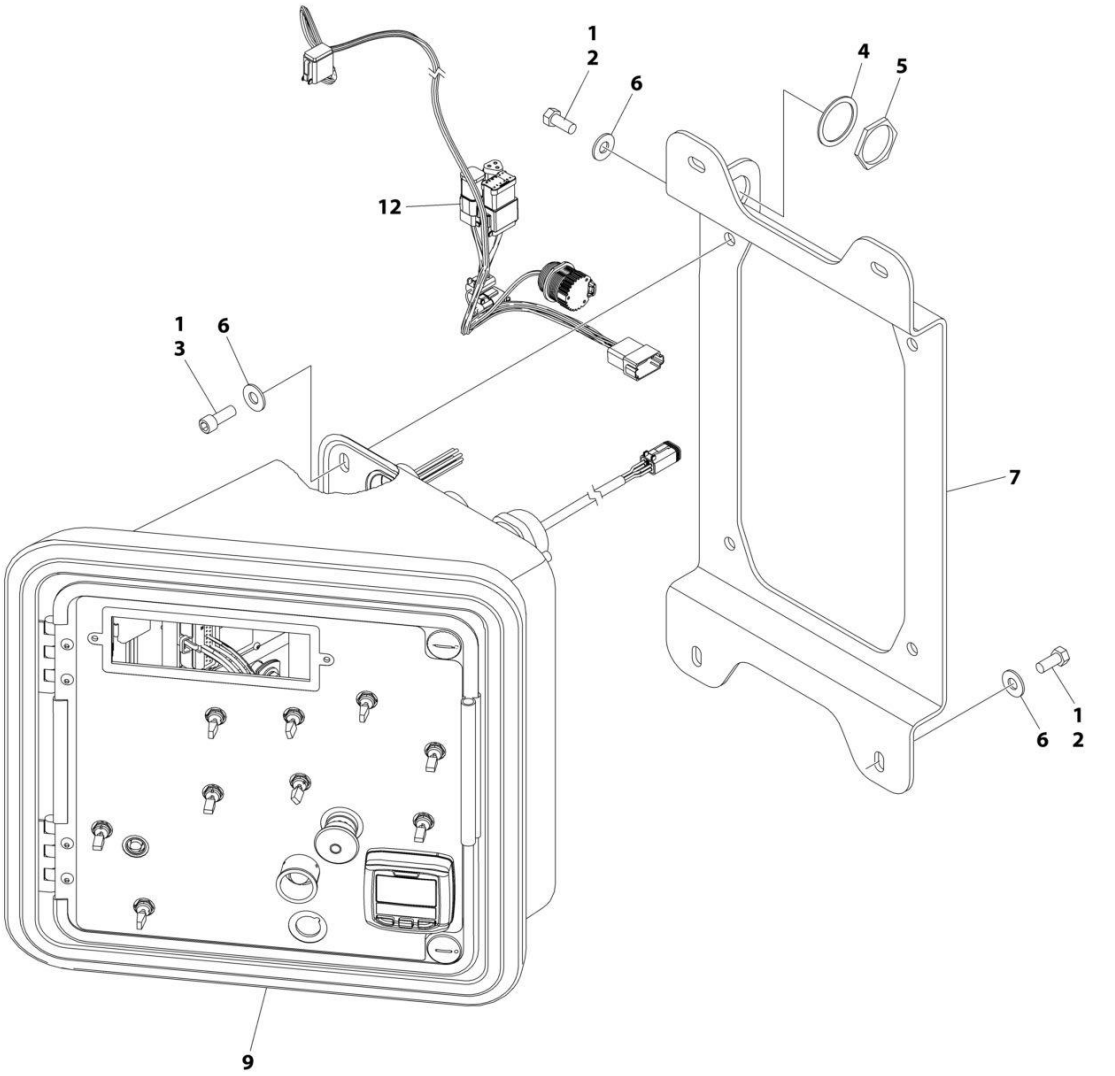

FIGURE 2-27. GROUND CONTROL BOX INSTALLATION - DEUTZ TD2011 ENGINES WITH SAUER PUMP (WITH TOWER STOW) (CE & UK CA SPECS) (LRC)

ITEM	PART NUMBER	QTY	DESCRIPTION	REV
	1001267657	Ref	GROUND CONTROL BOX INSTALLATION	C
1	0100011	AR	Compound, Locking	
2	0641607	5	Bolt 3/8 x 7/8	
3	3931616	2	Capscrew 3/8 x 1	
4	4460496	1	Terminal, Washer	
5	4460497	1	Terminal, Nut	
6	4751600	7	Washer 3/8	
7	1001114487	1	Bracket, Mounting	
8	1001119470	1	Harness, Engine (Not Shown) (See Separate Breakdown in this Section)	
9	1001265868	1	Ground Controls Assembly (See Separate Breakdown in this Section)	
10	4240017	AR	Tie-Strap (Not Shown)	
11	4460234	AR	Mount, Tie-Strap (Not Shown)	
12	1001288110	1	Harness, Diagnostic (See Separate Breakdown in ELECTRICAL Section)	

FIGURE 2-28. GROUND CONTROL BOX INSTALLATION - DEUTZ TCD2.9L4 ENGINES (WITHOUT TOWER STOW) (ALL SPECS EXCEPT AUSTRALIAN, CE & UK CA SPECS)

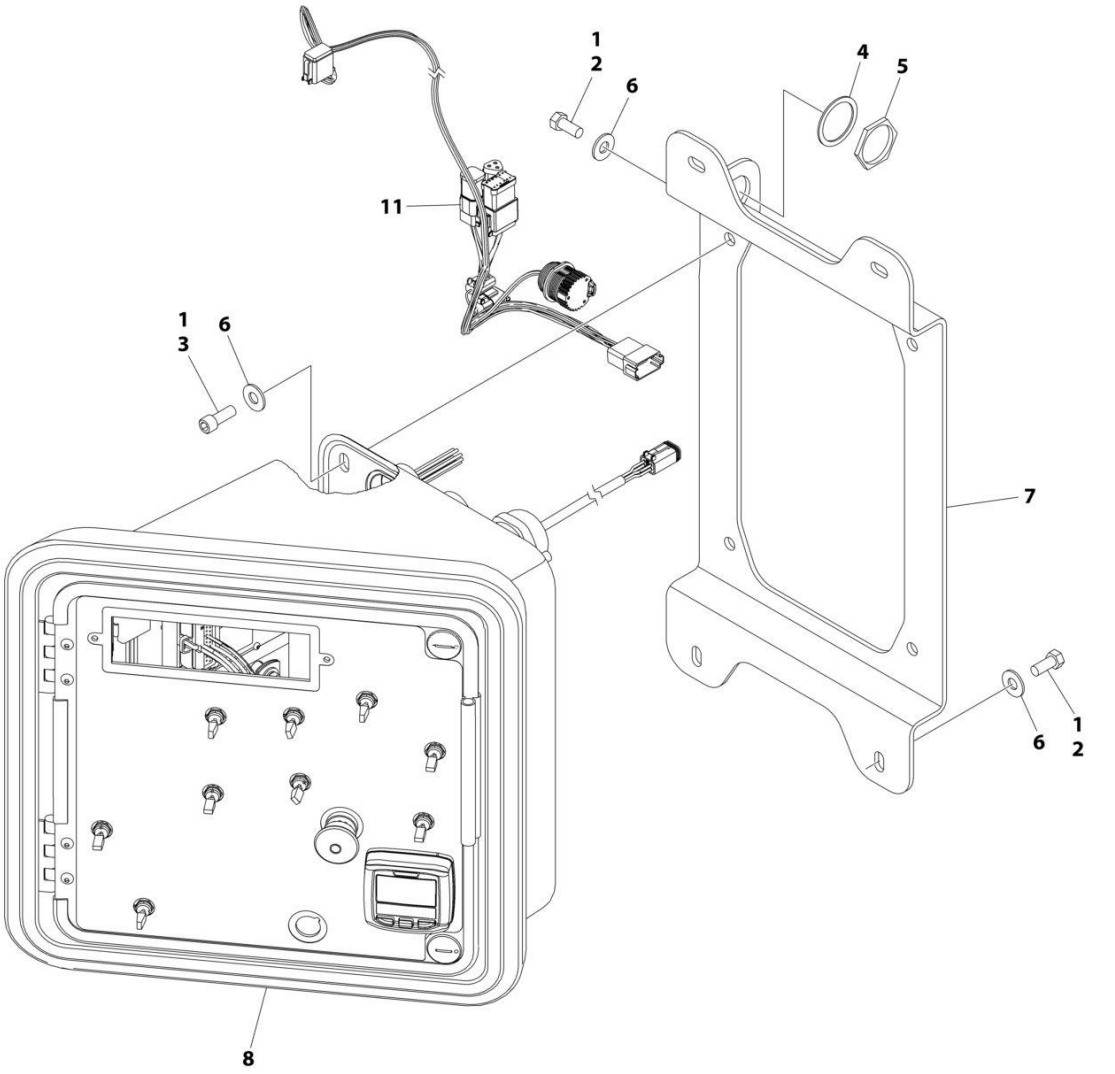

FIGURE 2-28. GROUND CONTROL BOX INSTALLATION - DEUTZ TCD2.9L4 ENGINES (WITHOUT TOWER STOW) (ALL SPECS EXCEPT AUSTRALIAN, CE & UK CA SPECS)

ITEM	PART NUMBER	QTY	DESCRIPTION	REV
	1001243543	Ref	GROUND CONTROL BOX INSTALLATION	D
1	0100011	AR	Compound, Locking	
2	0641607	5	Bolt 3/8 x 7/8	
3	3931616	2	Capscrew 3/8 x 1	
4	4460496	1	Terminal, Washer	
5	4460497	1	Terminal, Nut	
6	4751600	7	Washer 3/8	
7	1001114487	1	Bracket, Mounting	
8	1001266935	1	Ground Controls Assembly (See Separate Breakdown in this Section)	
9	4240017	AR	Tie-Strap (Not Shown)	
10	4460234	AR	Mount, Tie-Strap (Not Shown)	
11	1001288110	1	Harness, Diagnostic (See Separate Breakdown in ELECTRICAL Section)	

FIGURE 2-29. GROUND CONTROL BOX INSTALLATION - DEUTZ TCD2.9L4 ENGINES (WITH TOWER STOW) (ALL SPECS EXCEPT AUSTRALIAN, CE & UK CA SPECS).

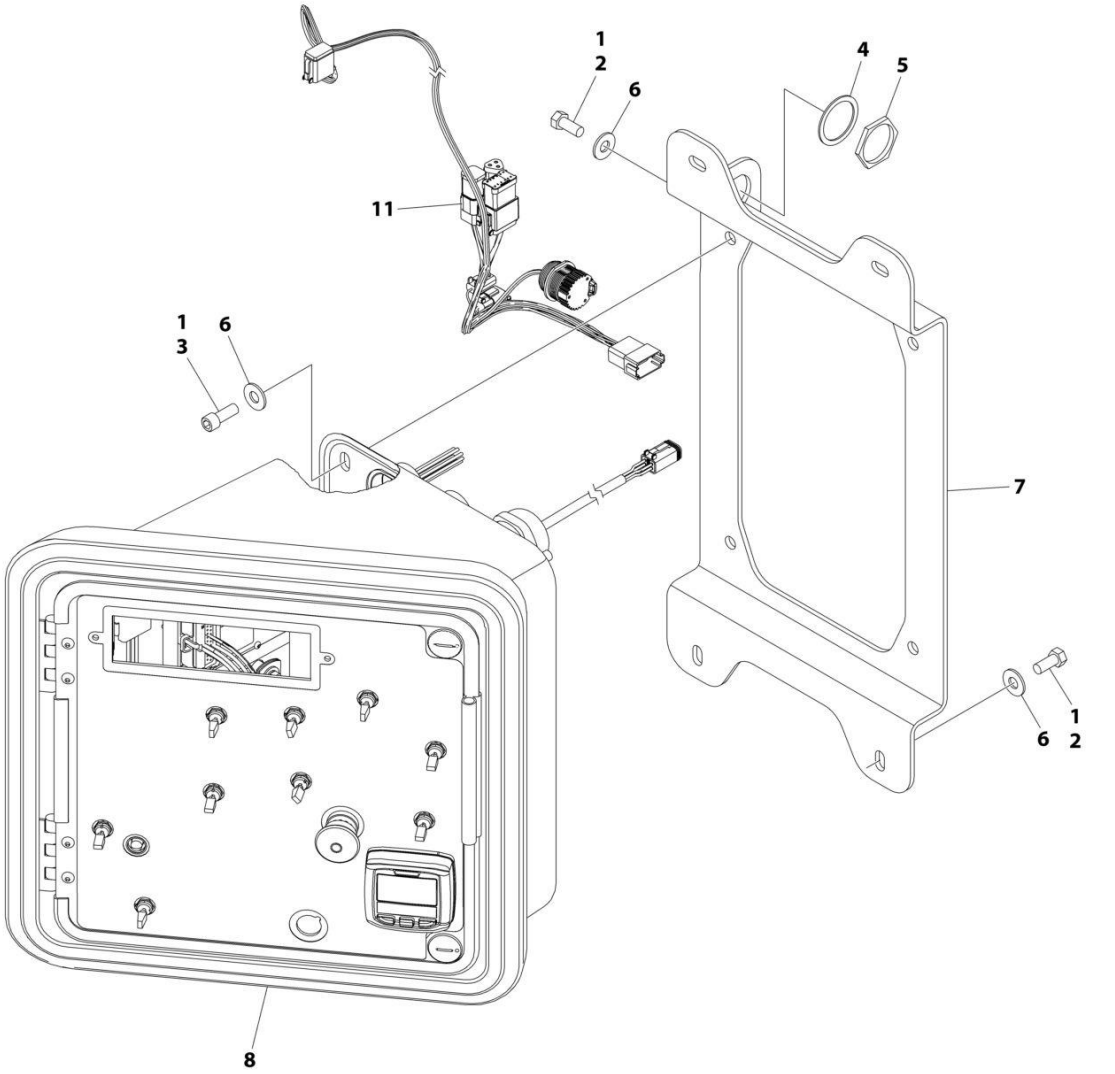

FIGURE 2-29. GROUND CONTROL BOX INSTALLATION - DEUTZ TCD2.9L4 ENGINES (WITH TOWER STOW) (ALL SPECS EXCEPT AUSTRALIAN, CE & UK CA SPECS).

ITEM	PART NUMBER	QTY	DESCRIPTION	REV
	1001267653	Ref	GROUND CONTROL BOX INSTALLATION	C
1	0100011	AR	Compound, Locking	
2	0641607	5	Bolt 3/8 x 7/8	
3	3931616	2	Capscrew 3/8 x 1	
4	4460496	1	Terminal, Washer	
5	4460497	1	Terminal, Nut	
6	4751600	7	Washer 3/8	
7	1001114487	1	Bracket, Mounting	
8	1001265867	1	Ground Controls Assembly (See Separate Breakdown in this Section)	
9	4240017	AR	Tie-Strap (Not Shown)	
10	4460234	AR	Mount, Tie-Strap (Not Shown)	
11	1001288110	1	Harness, Diagnostic (See Separate Breakdown in ELECTRICAL Section)	

FIGURE 2-30. GROUND CONTROL BOX INSTALLATION - DEUTZ TCD2.9L4 (STAGE V) ENGINES (WITHOUT TOWER STOW)(CE & UK CA SPECS)

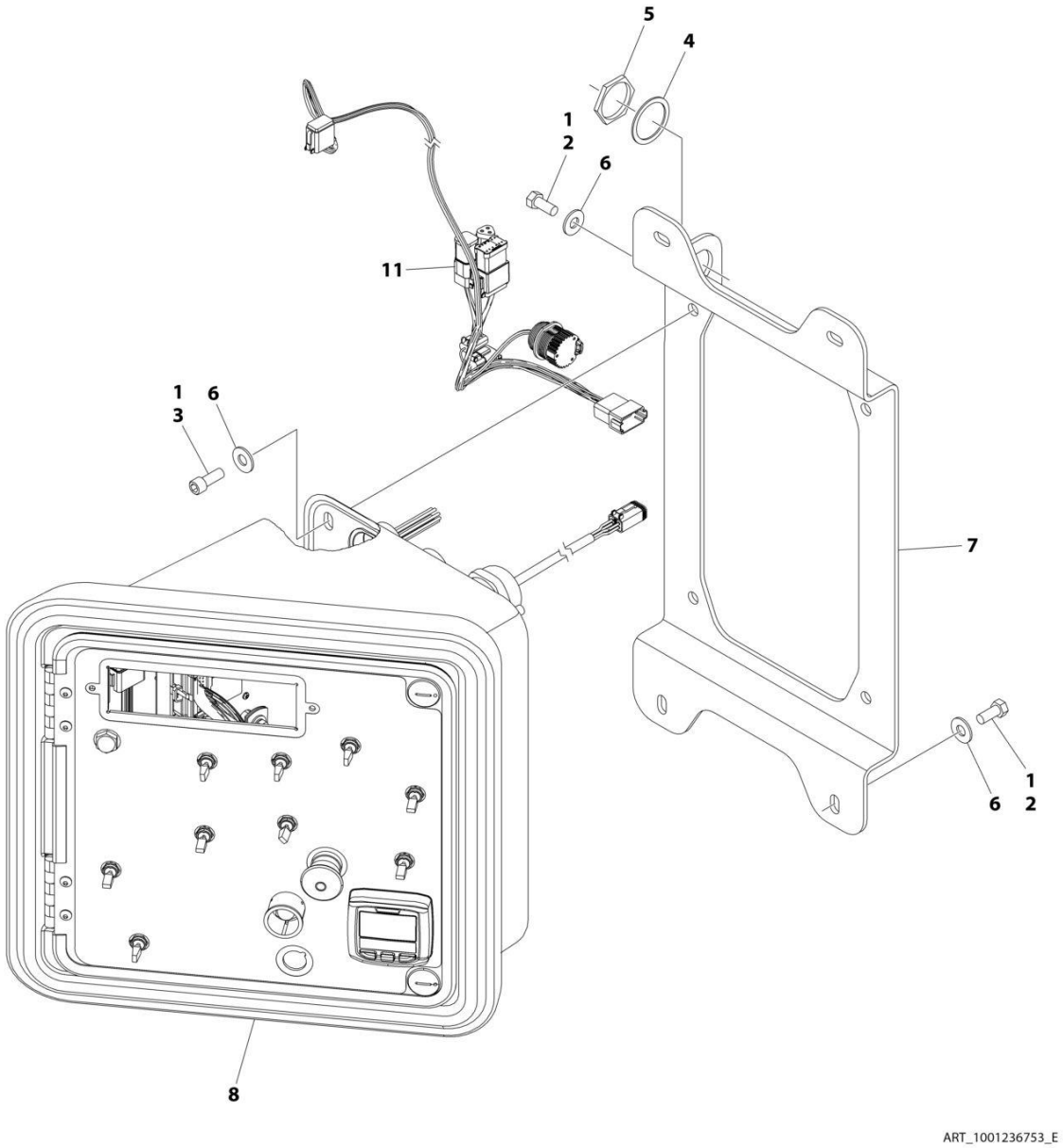

FIGURE 2-30. GROUND CONTROL BOX INSTALLATION - DEUTZ TCD2.9L4 (STAGE V) ENGINES (WITHOUT TOWER STOW)(CE & UK CA SPECS)

ITEM	PART NUMBER	QTY	DESCRIPTION	REV
	1001236753	Ref	GROUND CONTROL BOX INSTALLATION	E
1	0100011	AR	Compound, Locking	
2	0641607	5	Bolt 3/8 x 7/8	
3	3931616	2	Capscrew 3/8 x 1	
4	4460496	1	Terminal, Washer	
5	4460497	1	Terminal, Nut	
6	4751600	7	Washer 3/8	
7	1001114487	1	Bracket, Mounting	
8	1001266937	1	Ground Controls Assembly (See Separate Breakdown in this Section)	
9	4240017	AR	Tie-Strap (Not Shown)	
10	4460234	AR	Mount, Tie-Strap (Not Shown)	
11	1001288110	1	Harness, Diagnostic (See Separate Breakdown in ELECTRICAL Section)	

FIGURE 2-31. GROUND CONTROL BOX INSTALLATION - DEUTZ TCD2.9L4 (STAGE V) ENGINES (WITH TOWER STOW)(CE & UK CA SPECS)

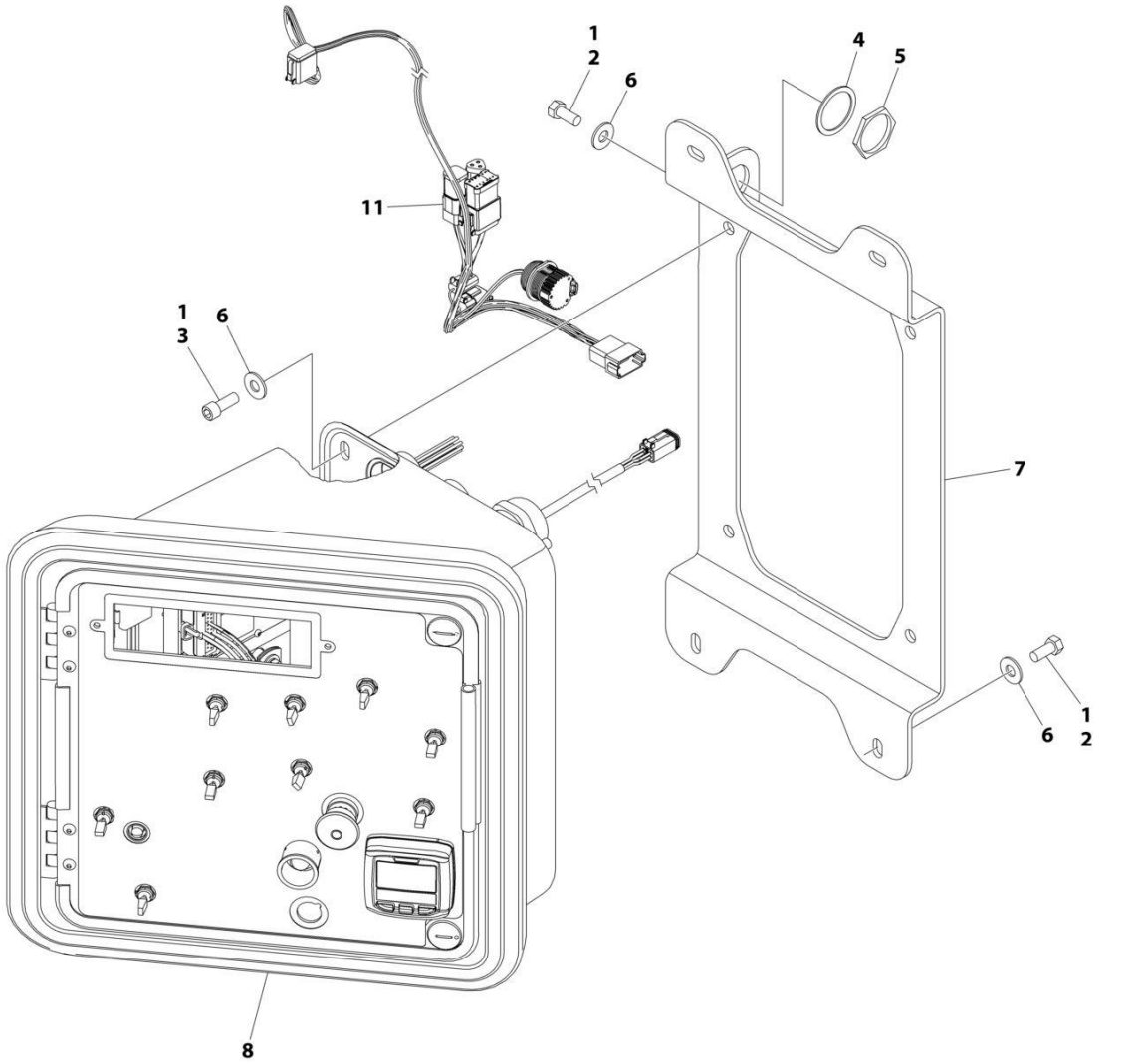

FIGURE 2-31. GROUND CONTROL BOX INSTALLATION - DEUTZ TCD2.9L4 (STAGE V) ENGINES (WITH TOWER STOW)(CE & UK CA SPECS)

ITEM	PART NUMBER	QTY	DESCRIPTION	REV
	1001267658	Ref	GROUND CONTROL BOX INSTALLATION	C
1	0100011	AR	Compound, Locking	
2	0641607	5	Bolt 3/8 x 7/8	
3	3931616	2	Capscrew 3/8 x 1	
4	4460496	1	Terminal, Washer	
5	4460497	1	Terminal, Nut	
6	4751600	7	Washer 3/8	
7	1001114487	1	Bracket, Mounting	
8	1001265869	1	Ground Controls Assembly (See Separate Breakdown in this Section)	
9	4240017	AR	Tie-Strap (Not Shown)	
10	4460234	AR	Mount, Tie-Strap (Not Shown)	
11	1001288110	1	Harness, Diagnostic (See Separate Breakdown in ELECTRICAL Section)	

FIGURE 2-32. GROUND CONTROL ASSEMBLY - WITH DEUTZ TD2011 AND DEUTZ TCD2.9L4 ENGINES - WITH DIGITAL DISPLAY (WITHOUT TOWER STOW) (ALL SPECS EXCEPT CE & UK CA SPECS)

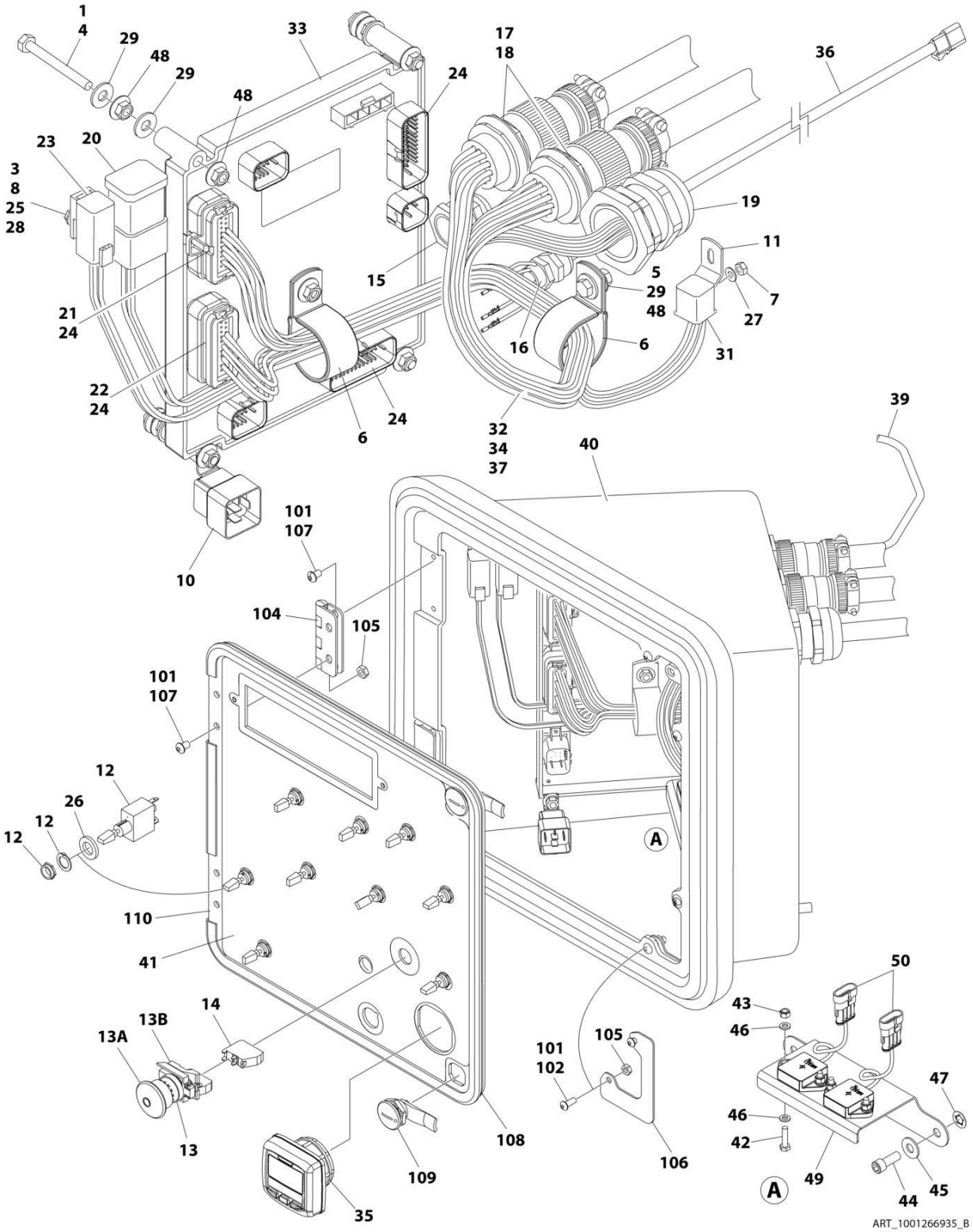

FIGURE 2-32. GROUND CONTROL ASSEMBLY - WITH DEUTZ TD2011 AND DEUTZ TCD2.9L4 ENGINES - WITH DIGITAL DISPLAY (WITHOUT TOWER STOW) (ALL SPECS EXCEPT CE & UK CA SPECS)

ITEM	PART NUMBER	QTY	DESCRIPTION	REV
	1001266935	Ref	GROUND CONTROL ASSEMBLY	B
1	0100011	AR	Compound, Locking	
3	0630464	2	Screw #10 x 1/2	
4	0630548	5	Screw, Self Tapping	
5	0641406	1	Bolt 1/4 x 3/4	
6	1320095	2	Clamp	
7	3310601	1	Nut #6	
8	3311001	2	Nut #10	
10	3740049	1	Relay	
11	4340832	1	Mount, Relay	
12	4360328	9	Switch, Toggle	
13	4360475	1	Switch, Push-Pull Emergency	
13A	7020175	1	Cap	
13B	7020176	1	Block, Contact	
14	4360476	1	Block, Contact	
15	4460425	1	Connector, Strain Relief	
16	4460428	1	Connector, Strain Relief	
17	4460470	2	Nut, Terminal	
18	4460471	2	Washer, Terminal	
19	4460526	1	Connector, Strain Relief	
20	4460837	1	Connector - 12 Pin	
21	4460874	1	Connector, White	
22	4460875	1	Connector, Gray	
23	4460892	1	Connector, Buss Bar - 6 Position	
24	4460905	4	Connector, Plug	
25	4460914	2	Base, Terminal	
26	4740397	9	Washer	
27	4750600	1	Washer #6	
28	4751000	2	Washer #10	
29	4751400	11	Washer 1/4	
31	4923036	1	Harness, Relay (See Separate Breakdown in ELECTRICAL Section)	
32	4923397	1	Harness, Valve (See Separate Breakdown in ELECTRICAL Section)	
33	1001281100	1	Module, Ground Control (Note: Re-calibration Required when Replaced)	
34	1001119529	1	Harness, Engine (See Separate Breakdown in ELECTRICAL Section)	
35	1001171482	1	Gauge, Display	
36	1001228497	1	Harness, Pressure Transducer (See Separate Breakdown in ELECTRICAL Section)	
37	1001242324	1	Harness, Ground Control Box (See Separate Breakdown in ELECTRICAL Section)	
38	1001248011	1	Wiring Diagram (Not Shown)	
39	1001279488	1	Harness, ClearSky Ready (See Separate Breakdown in ELECTRICAL Section)	
40	1001265864	1	Box Assembly (See Items 101-110 for Breakdown)	
41	1001266941	1	Decal - MTB	
42	0760612	4	Bolt M6 x 25	

SECTION 2 - TURNTABLE

ITEM	PART NUMBER	QTY	DESCRIPTION	REV
43	3290605	4	Nut, Lock M6	
44	3931616	2	Bolt 3/8 x 1	
45	4751600	2	Washer 3/8	
46	4811700	8	Washer M6	
47	8310070	2	Pushnut 3/8	
48	77143013	11	Nut 1/4	
49	1001278483	1	Bracket, Tilt Sensor	
50	1001219601	2	Sensor, Tilt Dual Axis CAN	
	1001265864	Ref	BOX ASSEMBLY	A
101	0100011	AR	Compound, Locking	
102	0630407	4	Screw 1/4 x 5/8	
104	2600279	2	Hinge	
105	3311402	8	Nut 1/4	
106	3573144	2	Plate, Latch	
107	3900251	8	Screw 1/4 x 3/8	
108	3960418	53 in/ 1.4m	Seal	
109	1001242373	2	Latch	
110	1001265859	1	Panel, MTB	

FIGURE 2-33. GROUND CONTROL ASSEMBLY - WITH DEUTZ TD2011 AND DEUTZ TCD2.9L4 ENGINES - WITH MECHANICAL HOUR METER (WITHOUT TOWER STOW) (ALL SPECS EXCEPT CE & UK CA SPECS)

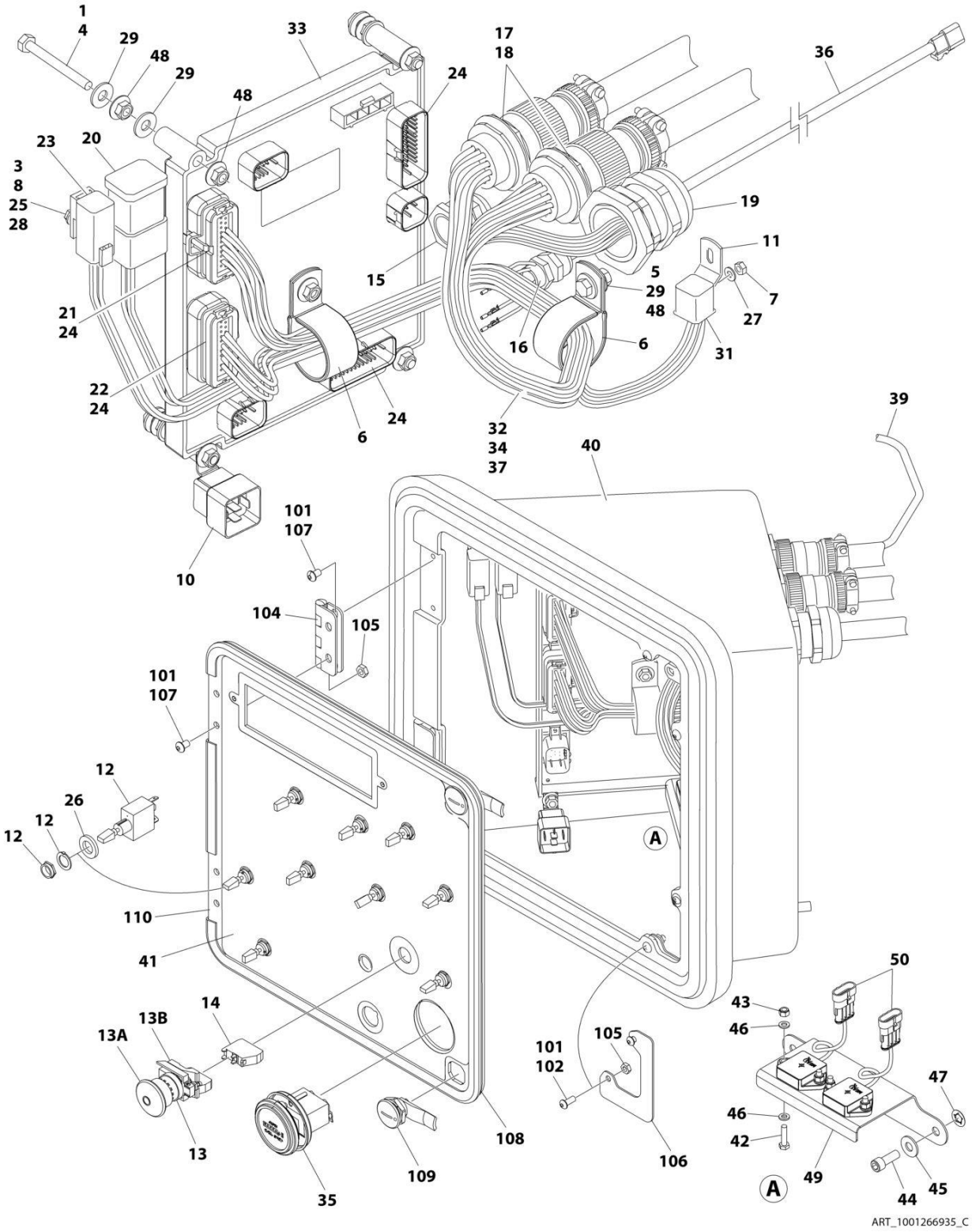

FIGURE 2-33. GROUND CONTROL ASSEMBLY - WITH DEUTZ TD2011 AND DEUTZ TCD2.9L4 ENGINES - WITH MECHANICAL HOUR METER (WITHOUT TOWER STOW) (ALL SPECS EXCEPT CE & UK CA SPECS)

ITEM	PART NUMBER	QTY	DESCRIPTION	REV
	1001266935	Ref	GROUND CONTROL ASSEMBLY	C
1	0100011	AR	Compound, Locking	
3	0630464	2	Screw #10 x 1/2	
4	0630548	5	Screw, Self Tapping	
5	0641406	1	Bolt 1/4 x 3/4	
6	1320095	2	Clamp	
7	3310601	1	Nut #6	
8	3311001	2	Nut #10	
10	3740049	1	Relay	
11	4340832	1	Mount, Relay	
12	4360328	9	Switch, Toggle	
13	4360475	1	Switch, Push-Pull Emergency	
13A	7020175	1	Cap	
13B	7020176	1	Block, Contact	
14	4360476	1	Block, Contact	
15	4460425	1	Connector, Strain Relief	
16	4460428	1	Connector, Strain Relief	
17	4460470	2	Nut, Terminal	
18	4460471	2	Washer, Terminal	
19	4460526	1	Connector, Strain Relief	
20	4460837	1	Connector - 12 Pin	
21	4460874	1	Connector, White	
22	4460875	1	Connector, Gray	
23	4460892	1	Connector, Buss Bar - 6 Position	
24	4460905	4	Connector, Plug	
25	4460914	2	Base, Terminal	
26	4740397	9	Washer	
27	4750600	1	Washer #6	
28	4751000	2	Washer #10	
29	4751400	11	Washer 1/4	
31	4923036	1	Harness, Relay (See Separate Breakdown in ELECTRICAL Section)	
32	4923397	1	Harness, Valve (See Separate Breakdown in ELECTRICAL Section)	
33	1001281100	1	Module, Ground Control (Note: Re-calibration Required when Replaced)	
34	1001119529	1	Harness, Engine (See Separate Breakdown in ELECTRICAL Section)	
35	10836804	1	Hour Meter	
36	1001228497	1	Harness, Pressure Transducer (See Separate Breakdown in ELECTRICAL Section)	
37	1001242324	1	Harness, Ground Control Box (See Separate Breakdown in ELECTRICAL Section)	
38	1001248011	1	Wiring Diagram (Not Shown)	
39	1001279488	1	Harness, ClearSky Ready (See Separate Breakdown in ELECTRICAL Section)	
40	1001280410	1	Box Assembly (See Items 101-110 for Breakdown)	
41	1001266941	1	Decal - MTB	
42	0760612	4	Bolt M6 x 25	

SECTION 2 - TURNTABLE

ITEM	PART NUMBER	QTY	DESCRIPTION	REV
43	3290605	4	Nut, Lock M6	
44	3931616	2	Bolt 3/8 x 1	
45	4751600	2	Washer 3/8	
46	4811700	8	Washer M6	
47	8310070	2	Pushnut 3/8	
48	77143013	11	Nut 1/4	
49	1001278483	1	Bracket, Tilt Sensor	
50	1001219601	2	Sensor, Tilt Dual Axis CAN	
	1001265864	Ref	BOX ASSEMBLY	A
101	0100011	AR	Compound, Locking	
102	0630407	4	Screw 1/4 x 5/8	
104	2600279	2	Hinge	
105	3311402	8	Nut 1/4	
106	3573144	2	Plate, Latch	
107	3900251	8	Screw 1/4 x 3/8	
108	3960418	53 in/ 1.4m	Seal	
109	1001242373	2	Latch	
110	1001265859	1	Panel, MTB	

FIGURE 2-34. GROUND CONTROL ASSEMBLY - WITH DEUTZ TD2011 AND DEUTZ TCD2.9L4 ENGINES - WITH DIGITAL DISPLAY (WITH TOWER STOW) (ALL SPECS EXCEPT CE & UK CA SPECS)

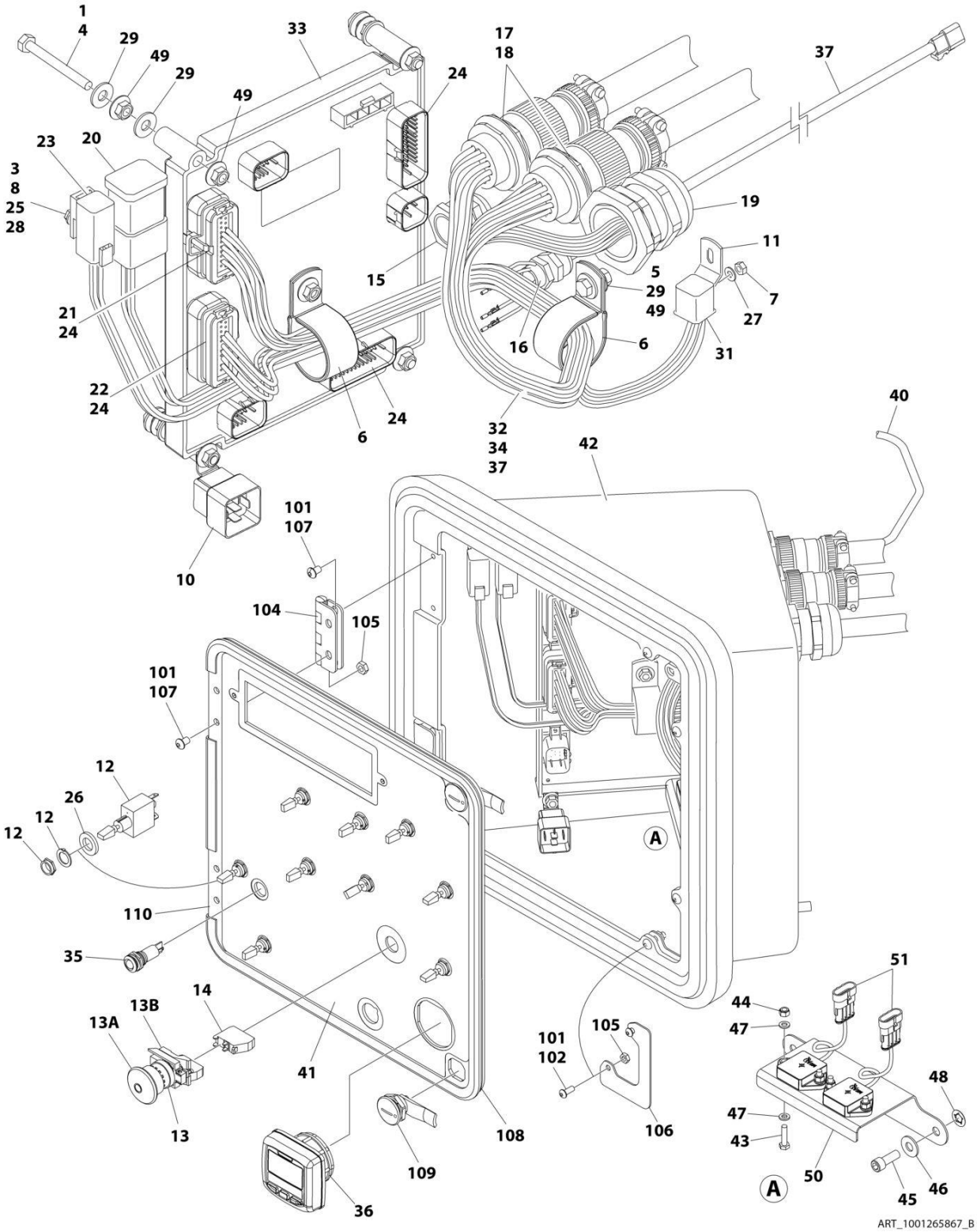

FIGURE 2-34. GROUND CONTROL ASSEMBLY - WITH DEUTZ TD2011 AND DEUTZ TCD2.9L4 ENGINES - WITH DIGITAL DISPLAY (WITH TOWER STOW) (ALL SPECS EXCEPT CE & UK CA SPECS)

ITEM	PART NUMBER	QTY	DESCRIPTION	REV
	1001265867	Ref	GROUND CONTROL ASSEMBLY	B
1	0100011	AR	Compound, Locking	
3	0630464	2	Screw #10 x 1/2	
4	0630548	5	Screw, Self Tapping	
5	0641406	1	Bolt 1/4 x 3/4	
6	1320095	2	Clamp	
7	3310601	1	Nut #6	
8	3311001	2	Nut #10	
10	3740049	1	Relay	
11	4340832	1	Mount, Relay	
12	4360328	9	Switch, Toggle	
13	4360475	1	Switch, Push-Pull Emergency	
13A	7020175	1	Cap	
13B	7020176	1	Block, Contact	
14	4360476	1	Block, Contact	
15	4460425	1	Connector, Strain Relief	
16	4460428	1	Connector, Strain Relief	
17	4460470	2	Nut, Terminal	
18	4460471	2	Washer, Terminal	
19	4460526	1	Connector, Strain Relief	
20	4460837	1	Connector - 12 Pin	
21	4460874	1	Connector, White	
22	4460875	1	Connector, Gray	
23	4460892	1	Connector, Buss Bar - 6 Position	
24	4460905	4	Connector, Plug	
25	4460914	2	Base, Terminal	
26	4740397	9	Washer	
27	4750600	1	Washer #6	
28	4751000	2	Washer #10	
29	4751400	11	Washer 1/4	
31	4923036	1	Harness, Relay (See Separate Breakdown in ELECTRICAL Section)	
32	4923397	1	Harness, Valve (See Separate Breakdown in ELECTRICAL Section)	
33	1001281100	1	Module, Ground Control (Note: Re-calibration Required when Replaced)	
34	1001119529	1	Harness, Engine (See Separate Breakdown in ELECTRICAL Section)	
35	1001137364	1	Lamp, LED Indicator Green	
36	1001171482	1	Gauge, Display	
37	1001228497	1	Harness, Pressure Transducer (See Separate Breakdown in ELECTRICAL Section)	
38	1001242324	1	Harness, Ground Control Box (See Separate Breakdown in ELECTRICAL Section)	
39	1001248011	1	Wiring Diagram (Not Shown)	
40	1001279488	1	Harness, ClearSky Ready (See Separate Breakdown in ELECTRICAL Section)	
41	1001265854	1	Decal - MTB	
42	1001265864	1	Box Assembly	

SECTION 2 - TURNTABLE

ITEM	PART NUMBER	QTY	DESCRIPTION	REV
43	0760612	4	Bolt M6 x 25	
44	3290605	4	Nut, Lock M6	
45	3931616	2	Bolt 3/8 x 1	
46	4751600	2	Washer 3/8	
47	4811700	8	Washer M6	
48	8310070	2	Pushnut 3/8 x 13/16	
49	77143013	11	Nut 1/4	
50	1001278483	1	Bracket, Tilt Sensor	
51	1001219601	2	Sensor, Tilt Dual Axis CAN	
	1001265864	Ref	BOX ASSEMBLY	A
101	0100011	AR	Compound, Locking	
102	0630407	4	Screw 1/4 x 5/8	
104	2600279	2	Hinge	
105	3311402	8	Nut 1/4	
106	3573144	2	Plate, Latch	
107	3900251	8	Screw 1/4 x 3/8	
108	3960418	53 in/ 1.4m	Seal	
109	1001242373	2	Latch	
110	1001265859	1	Panel, MTB	

FIGURE 2-35. GROUND CONTROL ASSEMBLY - WITH DEUTZ TD2011 AND DEUTZ TCD2.9L4 ENGINES - WITH MECHANICAL HOUR METER (WITH TOWER STOW) (ALL SPECS EXCEPT CE & UK CA SPECS)

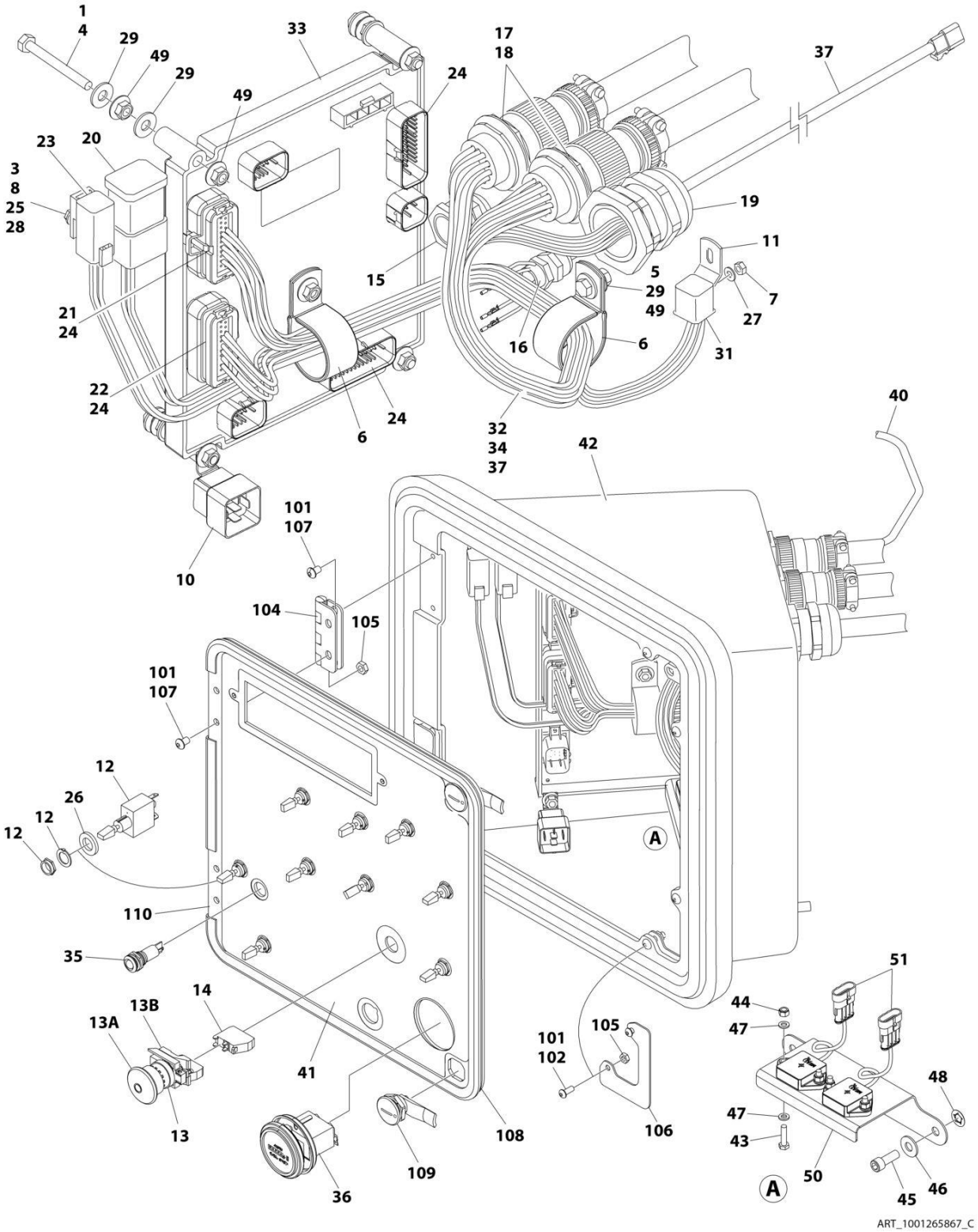

FIGURE 2-35. GROUND CONTROL ASSEMBLY - WITH DEUTZ TD2011 AND DEUTZ TCD2.9L4 ENGINES - WITH MECHANICAL HOUR METER (WITH TOWER STOW) (ALL SPECS EXCEPT CE & UK CA SPECS)

ITEM	PART NUMBER	QTY	DESCRIPTION	REV
	1001265867	Ref	GROUND CONTROL ASSEMBLY	C
1	0100011	AR	Compound, Locking	
3	0630464	2	Screw #10 x 1/2	
4	0630548	5	Screw, Self Tapping	
5	0641406	1	Bolt 1/4 x 3/4	
6	1320095	2	Clamp	
7	3310601	1	Nut #6	
8	3311001	2	Nut #10	
10	3740049	1	Relay	
11	4340832	1	Mount, Relay	
12	4360328	9	Switch, Toggle	
13	4360475	1	Switch, Push-Pull Emergency	
13A	7020175	1	Cap	
13B	7020176	1	Block, Contact	
14	4360476	1	Block, Contact	
15	4460425	1	Connector, Strain Relief	
16	4460428	1	Connector, Strain Relief	
17	4460470	2	Nut, Terminal	
18	4460471	2	Washer, Terminal	
19	4460526	1	Connector, Strain Relief	
20	4460837	1	Connector - 12 Pin	
21	4460874	1	Connector, White	
22	4460875	1	Connector, Gray	
23	4460892	1	Connector, Buss Bar - 6 Position	
24	4460905	4	Connector, Plug	
25	4460914	2	Base, Terminal	
26	4740397	9	Washer	
27	4750600	1	Washer #6	
28	4751000	2	Washer #10	
29	4751400	11	Washer 1/4	
31	4923036	1	Harness, Relay (See Separate Breakdown in ELECTRICAL Section)	
32	4923397	1	Harness, Valve (See Separate Breakdown in ELECTRICAL Section)	
33	1001281100	1	Module, Ground Control (Note: Re-calibration Required when Replaced)	
34	1001119529	1	Harness, Engine (See Separate Breakdown in ELECTRICAL Section)	
35	1001137364	1	Lamp, LED Indicator Green	
36	10836804	1	Hour Meter	
37	1001228497	1	Harness, Pressure Transducer (See Separate Breakdown in ELECTRICAL Section)	
38	1001242324	1	Harness, Ground Control Box (See Separate Breakdown in ELECTRICAL Section)	
39	1001248011	1	Wiring Diagram (Not Shown)	
40	1001279488	1	Harness, ClearSky Ready (See Separate Breakdown in ELECTRICAL Section)	
41	1001265854	1	Decal - MTB	
42	1001280410	1	Box Assembly	

SECTION 2 - TURNTABLE

ITEM	PART NUMBER	QTY	DESCRIPTION	REV
43	0760612	4	Bolt M6 x 25	
44	3290605	4	Nut, Lock M6	
45	3931616	2	Bolt 3/8 x 1	
46	4751600	2	Washer 3/8	
47	4811700	8	Washer M6	
48	8310070	2	Pushnut 3/8 x 13/16	
49	77143013	11	Nut 1/4	
50	1001278483	1	Bracket, Tilt Sensor	
51	1001219601	2	Sensor, Tilt Dual Axis CAN	
	1001265864	Ref	BOX ASSEMBLY	A
101	0100011	AR	Compound, Locking	
102	0630407	4	Screw 1/4 x 5/8	
104	2600279	2	Hinge	
105	3311402	8	Nut 1/4	
106	3573144	2	Plate, Latch	
107	3900251	8	Screw 1/4 x 3/8	
108	3960418	53 in/ 1.4m	Seal	
109	1001242373	2	Latch	
110	1001265859	1	Panel, MTB	

FIGURE 2-36. GROUND CONTROL ASSEMBLY - DEUTZ TD2011 ENGINES (WITHOUT TOWER STOW) (CE & UK CA SPECS)

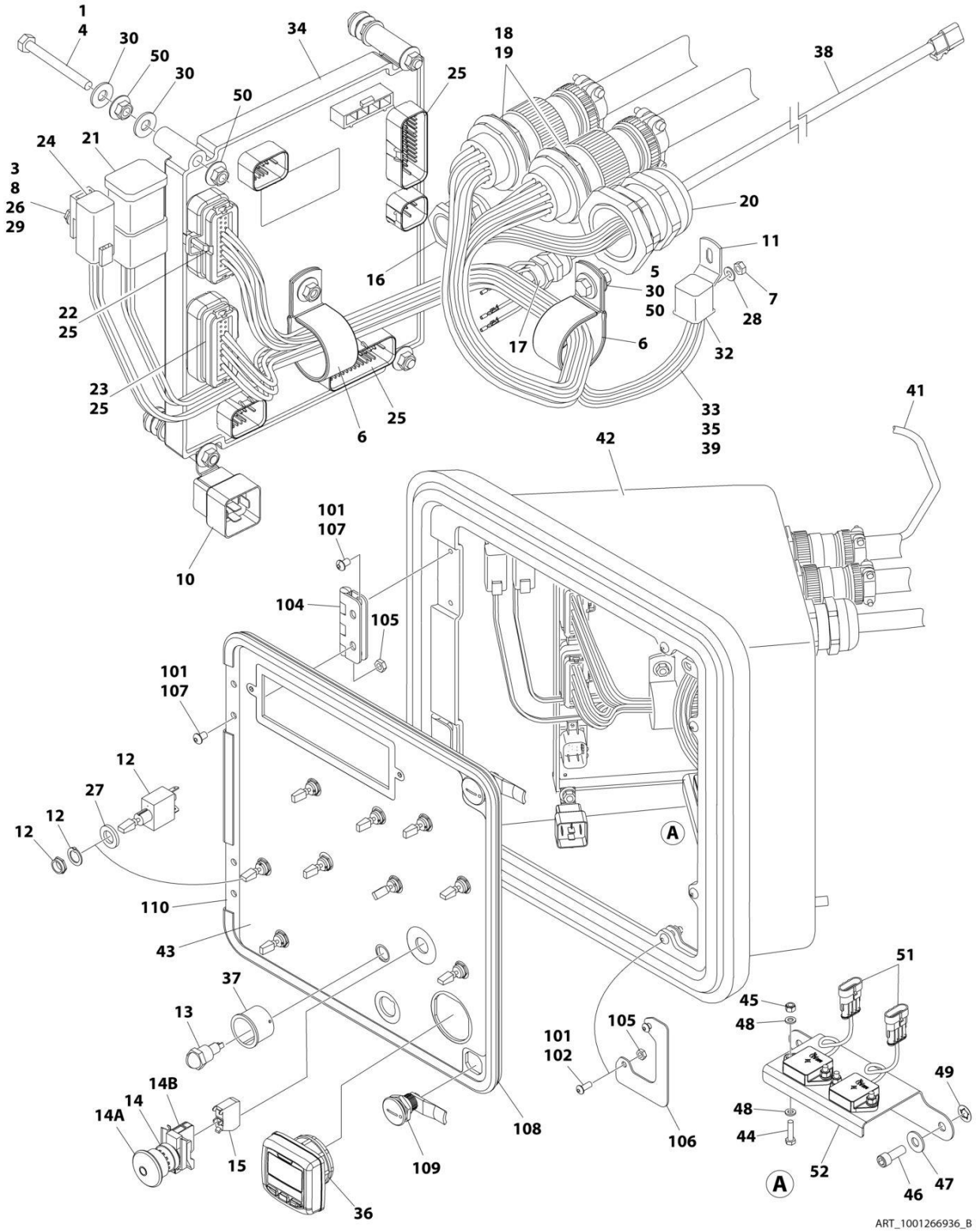

FIGURE 2-36. GROUND CONTROL ASSEMBLY - DEUTZ TD2011 ENGINES (WITHOUT TOWER STOW) (CE & UK CA SPECS)

ITEM	PART NUMBER	QTY	DESCRIPTION	REV
	1001266936	Ref	GROUND CONTROL ASSEMBLY	B
1	0100011	AR	Compound, Locking	
3	0630464	2	Screw #10 x 1/2	
4	0630548	5	Screw, Self Tapping	
5	0641406	1	Bolt 1/4 x 3/4	
6	1320095	2	Clamp	
7	3310601	1	Nut #6	
8	3311001	2	Nut #10	
10	3740049	1	Relay	
11	4340832	1	Mount, Relay	
12	4360328	9	Switch, Toggle	
13	4360387	1	Switch, Yellow Push Button	
14	4360475	1	Switch, Push-Pull Emergency	
14A	7020175	1	Cap	
14B	7020176	1	Block, Contact	
15	4360476	1	Block, Contact	
16	4460425	1	Connector, Strain Relief	
17	4460428	1	Connector, Strain Relief	
18	4460470	2	Nut, Terminal	
19	4460471	2	Washer, Terminal	
20	4460526	1	Connector, Strain Relief	
21	4460837	1	Connector - 12 Pin	
22	4460874	1	Connector, White	
23	4460875	1	Connector, Gray	
24	4460892	1	Connector, Buss Bar - 6 Position	
25	4460905	4	Connector, Plug	
26	4460914	2	Base, Terminal	
27	4740397	9	Washer	
28	4750600	1	Washer #6	
29	4751000	2	Washer #10	
30	4751400	11	Washer 1/4	
32	4923036	1	Harness, Relay (See Separate Breakdown in ELECTRICAL Section)	
33	4923397	1	Harness, Valve (See Separate Breakdown in ELECTRICAL Section)	
34	1001281100	1	Module, Ground Control (Note: Re-calibration Required when Replaced)	
35	1001119529	1	Harness, Engine (See Separate Breakdown in ELECTRICAL Section)	
36	1001171482	1	Gauge, Display	
37	1001176469	1	Shroud, Push Button Switch	
38	1001228497	1	Harness, Pressure Transducer (See Separate Breakdown in ELECTRICAL Section)	
39	1001242324	1	Harness, Ground Control Box (See Separate Breakdown in ELECTRICAL Section)	
40	1001248011	1	Wiring Diagram (Not Shown)	
41	1001279488	1	Harness, ClearSky Ready (See Separate Breakdown in ELECTRICAL Section)	
42	1001265865	1	Box Assembly (See Items 101-110 for Breakdown)	
43	1001266942	1	Decal - MTB	

SECTION 2 - TURNTABLE

ITEM	PART NUMBER	QTY	DESCRIPTION	REV
44	0760612	4	Bolt M6 x 25	
45	3290605	4	Nut, Lock M6	
46	3931616	2	Bolt 3/8 x 1	
47	4751600	2	Washer 3/8	
48	4811700	8	Washer M6	
49	8310070	2	Pushnut 3/8 x 13/16	
50	77143013	11	Nut 1/4	
51	1001219601	2	Sensor, Tilt Dual Axis CAN	
52	1001278483	1	Bracket, Tilt Sensor	
	1001265865	Ref	BOX ASSEMBLY	B
101	0100011	AR	Compound, Locking	
102	0630407	4	Screw 1/4 x 5/8	
104	2600279	2	Hinge	
105	3311402	8	Nut 1/4	
106	3573144	2	Plate, Latch	
107	3900251	8	Screw 1/4 x 3/8	
108	3960418	53 in/ 1.4m	Seal	
109	1001242373	2	Latch	
110	1001265860	1	Panel, MTB	

FIGURE 2-37. GROUND CONTROL ASSEMBLY - DEUTZ TD2011 ENGINES (WITH TOWER STOW) (CE & UK CA SPECS)

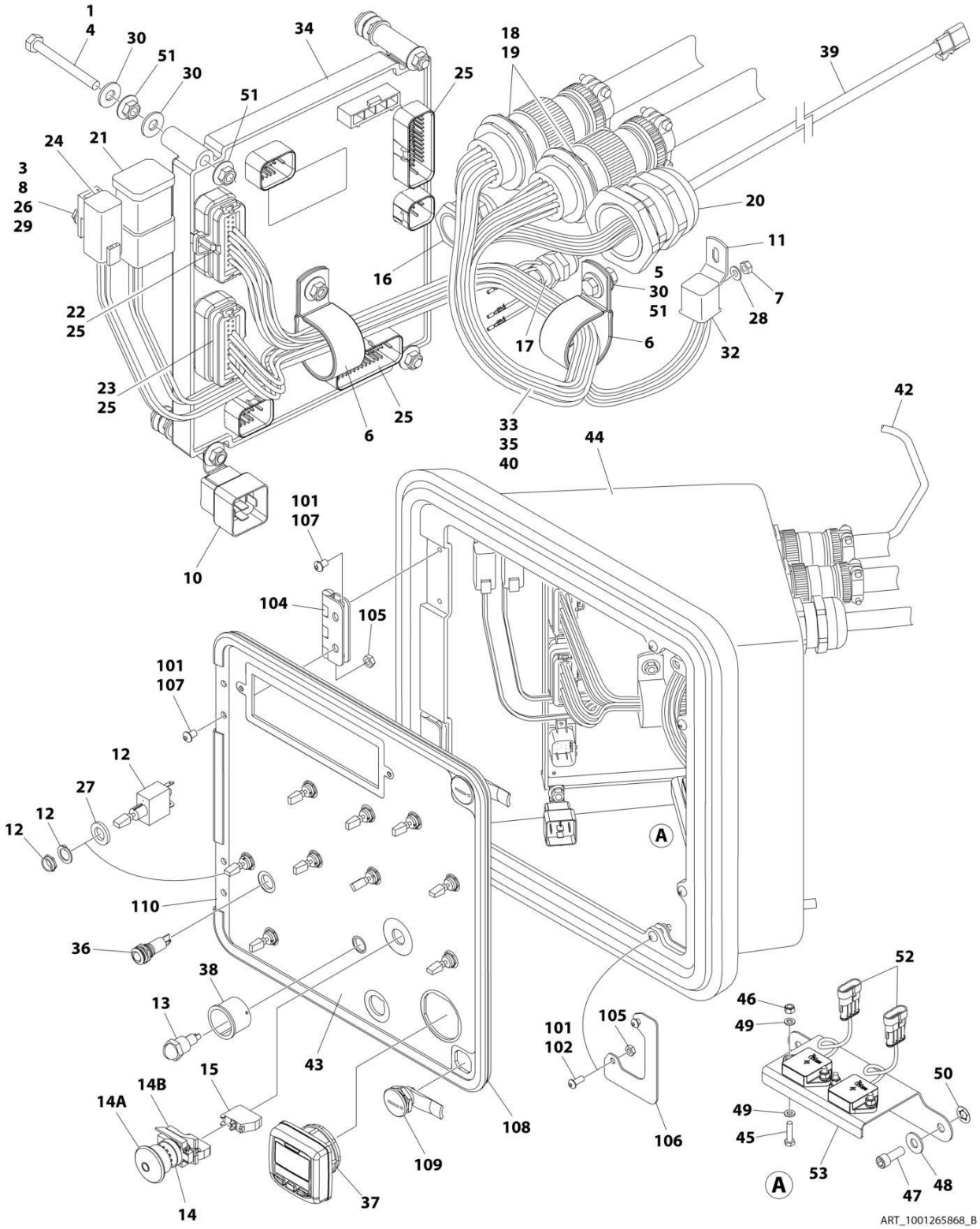

FIGURE 2-37. GROUND CONTROL ASSEMBLY - DEUTZ TD2011 ENGINES (WITH TOWER STOW) (CE & UK CA SPECS)

ITEM	PART NUMBER	QTY	DESCRIPTION	REV
	1001265868	Ref	GROUND CONTROL ASSEMBLY	B
1	0100011	AR	Compound, Locking	
3	0630464	2	Screw #10 x 1/2	
4	0630548	5	Screw, Self Tapping	
5	0641406	1	Bolt 1/4 x 3/4	
6	1320095	2	Clamp	
7	3310601	1	Nut #6	
8	3311001	2	Nut #10	
10	3740049	1	Relay	
11	4340832	1	Mount, Relay	
12	4360328	9	Switch, Toggle	
13	4360387	1	Switch, Yellow Push Button	
14	4360475	1	Switch, Push-Pull Emergency	
14A	7020175	1	Cap	
14B	7020176	1	Block, Contact	
15	4360476	1	Block, Contact	
16	4460425	1	Connector, Strain Relief	
17	4460428	1	Connector, Strain Relief	
18	4460470	2	Nut, Terminal	
19	4460471	2	Washer, Terminal	
20	4460526	1	Connector, Strain Relief	
21	4460837	1	Connector - 12 Pin	
22	4460874	1	Connector, White	
23	4460875	1	Connector, Gray	
24	4460892	1	Connector, Buss Bar - 6 Position	
25	4460905	4	Connector, Plug	
26	4460914	2	Base, Terminal	
27	4740397	9	Washer	
28	4750600	1	Washer #6	
29	4751000	2	Washer #10	
30	4751400	11	Washer 1/4	
32	4923036	1	Harness, Relay (See Separate Breakdown in ELECTRICAL Section)	
33	4923397	1	Harness, Valve (See Separate Breakdown in ELECTRICAL Section)	
34	1001281100	1	Module, Ground Control (Note: Re-calibration Required when Replaced)	
35	1001119529	1	Harness, Engine (See Separate Breakdown in ELECTRICAL Section)	
36	1001137364	1	Lamp, LED Indicator Green	
37	1001171482	1	Gauge, Display	
38	1001176469	1	Shroud, Push Button Switch	
39	1001228497	1	Harness, Pressure Transducer (See Separate Breakdown in ELECTRICAL Section)	
40	1001242324	1	Harness, Ground Control Box (See Separate Breakdown in ELECTRICAL Section)	
41	1001248011	1	Wiring Diagram (Not Shown)	
42	1001279488	1	Harness, ClearSky Ready (See Separate Breakdown in ELECTRICAL Section)	
43	1001265855	1	Decal, MTB	

SECTION 2 - TURNTABLE

ITEM	PART NUMBER	QTY	DESCRIPTION	REV
44	1001265865	1	Box Assembly	
45	0760612	4	Bolt M6 x 25	
46	3290605	4	Nut, Lock M6	
47	3931616	2	Bolt 3/8 x 1	
48	4751600	2	Washer 3/8	
49	4811700	8	Washer M6	
50	8310070	2	Pushnut 3/8	
51	77143013	11	Nut 1/4	
52	1001219601	2	Sensor, Tilt Dual Axis CAN	
53	1001278483	1	Bracket, Tilt Sensor	
	1001265865	Ref	BOX ASSEMBLY	B
101	0100011	AR	Compound, Locking	
102	0630407	4	Screw 1/4 x 5/8	
104	2600279	2	Hinge	
105	3311402	8	Nut 1/4	
106	3573144	2	Plate, Latch	
107	3900251	8	Screw 1/4 x 3/8	
108	3960418	53 in/ 1.4m	Seal	
109	1001242373	2	Latch	
110	1001265860	1	Panel, MTB	

FIGURE 2-38. GROUND CONTROL ASSEMBLY - DEUTZ TCD2.9L4 (STAGE V) (WITHOUT TOWER STOW) (CE & UK CA SPECS)

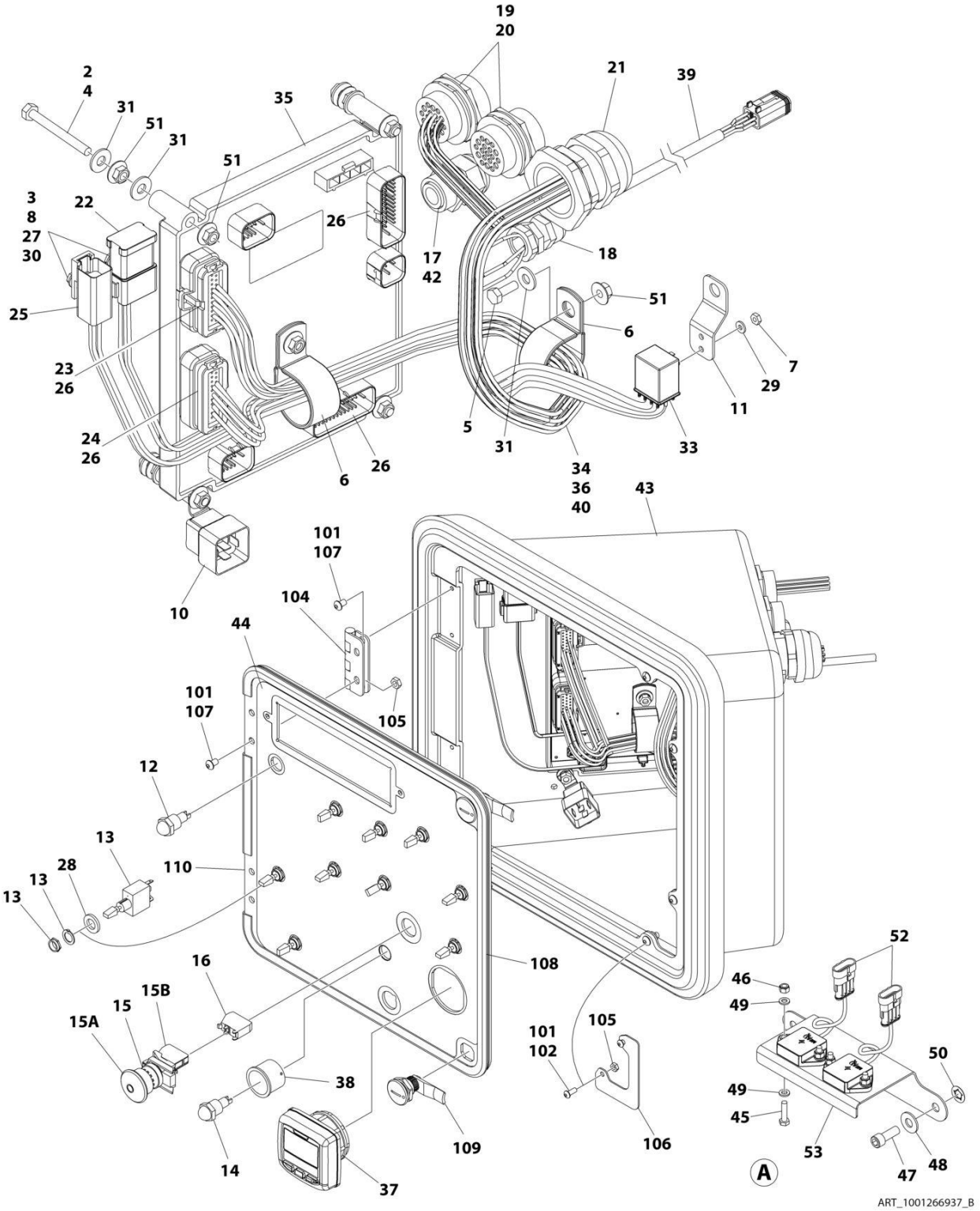

FIGURE 2-38. GROUND CONTROL ASSEMBLY - DEUTZ TCD2.9L4 (STAGE V) (WITHOUT TOWER STOW) (CE & UK CA SPECS)

ITEM	PART NUMBER	QTY	DESCRIPTION	REV
	1001266937	Ref	GROUND CONTROL ASSEMBLY	B
2	0100011	AR	Compound, Locking	
3	0630464	2	Screw #10 x 1/2	
4	0630548	5	Screw, Self Tapping	
5	0641406	1	Bolt 1/4 x 3/4	
6	1320095	2	Clamp	
7	3310601	1	Nut #6	
8	3311001	2	Nut #10	
10	3740049	1	Relay	
11	4340832	1	Mount, Relay	
12	4360274	1	Switch, Gray Push Button	
13	4360328	9	Switch, Toggle	
14	4360387	1	Switch, Yellow Push Button	
15	4360475	1	Switch, Push-Pull Emergency	
15A	7020175	1	Cap	
15B	7020176	1	Block, Contact	
16	4360476	1	Block, Contact	
17	4460425	1	Connector, Strain Relief	
18	4460428	1	Connector, Strain Relief	
19	4460470	2	Nut, Terminal	
20	4460471	2	Washer, Terminal	
21	4460526	1	Connector, Strain Relief	
22	4460837	1	Connector - 12 Pin	
23	4460874	1	Connector, White	
24	4460875	1	Connector, Gray	
25	4460892	1	Connector, Buss Bar - 6 Position	
26	4460905	4	Connector, Plug	
27	4460914	2	Base, Terminal	
28	4740397	9	Spacer, Washer	
29	4750600	1	Washer #6	
30	4751000	2	Washer #10	
31	4751400	11	Washer 1/4	
33	4923036	1	Harness, Relay (See Separate Breakdown in ELECTRICAL Section)	
34	4923397	1	Harness, Valve (See Separate Breakdown in ELECTRICAL Section)	
35	1001281100	1	Module, Ground Control (Note: Re-calibration Required when Replaced)	
36	1001119529	1	Harness, Engine (See Separate Breakdown in ELECTRICAL Section)	
37	1001171482	1	Gauge, Display	
38	1001176469	1	Shroud, Push Button Switch	
39	1001228497	1	Harness, Pressure Transducer (See Separate Breakdown in ELECTRICAL Section)	
40	1001242324	1	Harness, Ground Control Box (See Separate Breakdown in ELECTRICAL Section)	
41	1001248011	1	Wiring Diagram (Not Shown)	
42	1001279488	1	Harness, ClearSky Ready (See Separate Breakdown in ELECTRICAL Section)	
43	1001265865	1	Box Assembly (See Items 101-110 for Breakdown)	

SECTION 2 - TURNTABLE

ITEM	PART NUMBER	QTY	DESCRIPTION	REV
44	1001266943	1	Decal - MTB	
45	0760612	4	Bolt M6 x 25	
46	3290605	4	Nut, Lock M6	
47	3931616	2	Bolt 3/8 x 1	
48	4751600	2	Washer 3/8	
49	4811700	8	Washer M6	
50	8310070	2	Pushnut 3/8 x 13/16	
51	77143013	11	Nut 1/4	
52	1001219601	2	Sensor, Tilt Dual Axis CAN	
53	1001278483	1	Bracket, Tilt Sensor	
	1001265865	Ref	BOX ASSEMBLY	B
101	0100011	AR	Compound, Locking	
102	0630407	4	Screw 1/4 x 5/8	
104	2600279	2	Hinge	
105	3311402	8	Nut 1/4	
106	3573144	2	Plate, Latch	
107	3900251	8	Screw 1/4 x 3/8	
108	3960418	53 in/ 1.4m	Seal	
109	1001242373	2	Latch	
110	1001265860	1	Panel, MTB	

FIGURE 2-39. GROUND CONTROL ASSEMBLY - DEUTZ TCD2.9L4 (STAGE V) (WITH TOWER STOW) (CE & UK CA SPECS)

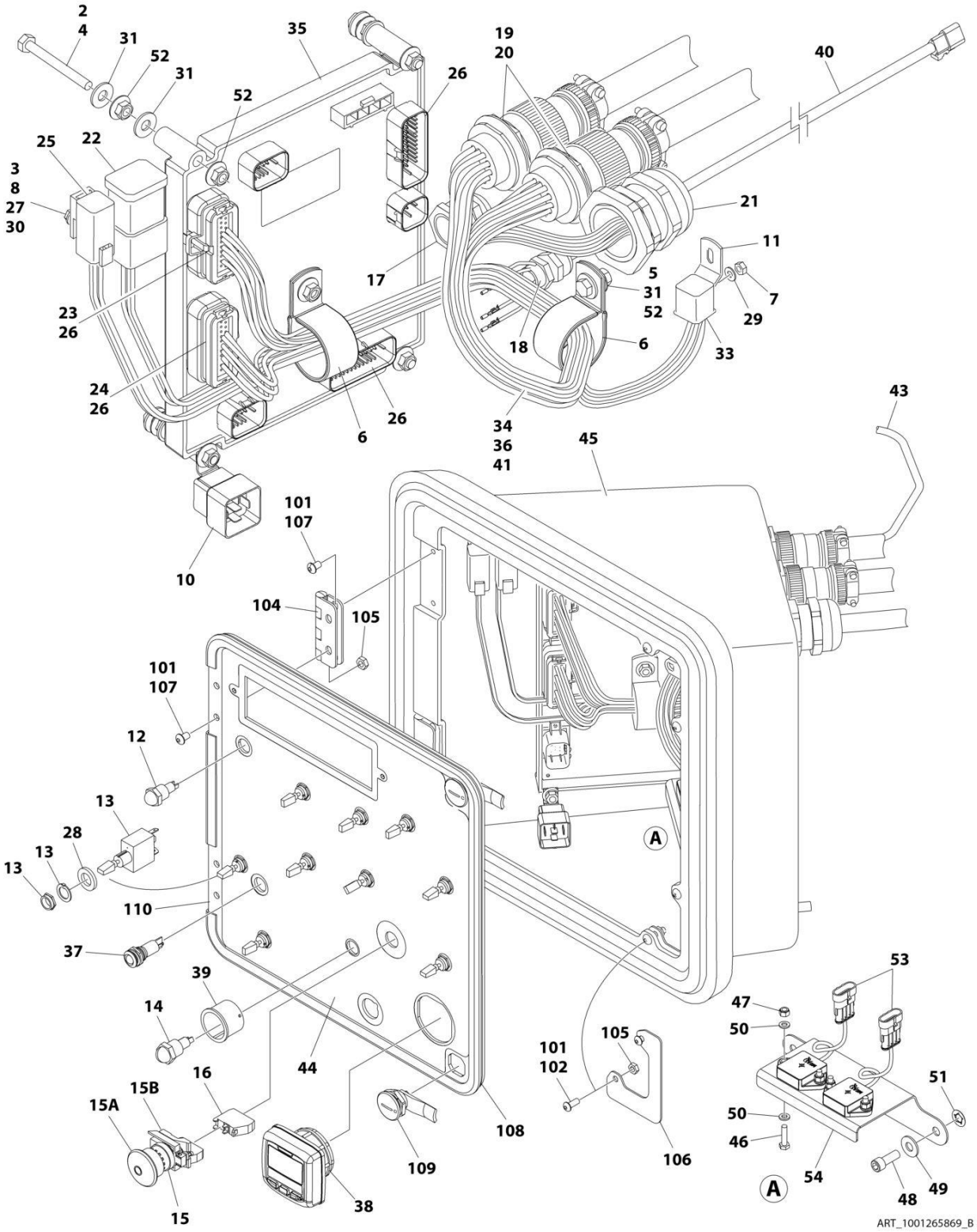

FIGURE 2-39. GROUND CONTROL ASSEMBLY - DEUTZ TCD2.9L4 (STAGE V) (WITH TOWER STOW) (CE & UK CA SPECS)

ITEM	PART NUMBER	QTY	DESCRIPTION	REV
	1001265869	Ref	GROUND CONTROL ASSEMBLY	B
2	0100011	AR	Compound, Locking	
3	0630464	2	Screw #10 x 1/2	
4	0630548	5	Screw, Self Tapping	
5	0641406	1	Bolt 1/4 x 3/4	
6	1320095	2	Clamp	
7	3310601	1	Nut #6	
8	3311001	2	Nut #10	
10	3740049	1	Relay	
11	4340832	1	Mount, Relay	
12	4360274	1	Switch, Gray Push Button	
13	4360328	9	Switch, Toggle	
14	4360387	1	Switch, Yellow Push Button	
15	4360475	1	Switch, Push-Pull Emergency	
15A	7020175	1	Cap	
15B	7020176	1	Block, Contact	
16	4360476	1	Block, Contact	
17	4460425	1	Connector, Strain Relief	
18	4460428	1	Connector, Strain Relief	
19	4460470	2	Nut, Terminal	
20	4460471	2	Washer, Terminal	
21	4460526	1	Connector, Strain Relief	
22	4460837	1	Connector - 12 Pin	
23	4460874	1	Connector, White	
24	4460875	1	Connector, Gray	
25	4460892	1	Connector, Buss Bar - 6 Position	
26	4460905	4	Connector, Plug	
27	4460914	2	Base, Terminal	
28	4740397	9	Spacer, Washer	
29	4750600	1	Washer #6	
30	4751000	2	Washer #10	
31	4751400	11	Washer 1/4	
33	4923036	1	Harness, Relay (See Separate Breakdown in ELECTRICAL Section)	
34	4923397	1	Harness, Valve (See Separate Breakdown in ELECTRICAL Section)	
35	1001281100	1	Module, Ground Control (Note: Re-calibration Required when Replaced)	
36	1001119529	1	Harness, Engine (See Separate Breakdown in ELECTRICAL Section)	
37	1001137364	1	Lamp, LED Indicator Green	
38	1001171482	1	Gauge, Display	
39	1001176469	1	Shroud, Push Button Switch	
40	1001228497	1	Harness, Pressure Transducer (See Separate Breakdown in ELECTRICAL Section)	
41	1001242324	1	Harness, Ground Control Box (See Separate Breakdown in ELECTRICAL Section)	
42	1001248011	1	Wiring Diagram (Not Shown)	
43	1001279488	1	Harness, ClearSky Ready (See Separate Breakdown in ELECTRICAL Section)	

SECTION 2 - TURNTABLE

ITEM	PART NUMBER	QTY	DESCRIPTION	REV
44	1001265856	1	Decal - MTB	
45	1001265865	1	Box Assembly (See Items 101-110 for Breakdown)	
46	0760612	4	Bolt M6 x 25	
47	3290605	4	Nut, Lock M6	
48	3931616	2	Bolt 3/8 x 1	
49	4751600	2	Washer 3/8	
50	4811700	8	Washer M6	
51	8310070	2	Pushnut 3/8	
52	77143013	11	Nut 1/4	
53	1001219601	2	Sensor, Tilt Dual Axis CAN	
54	1001278483	1	Bracket, Tilt Sensor	
	1001265865	Ref	BOX ASSEMBLY	B
101	0100011	AR	Compound, Locking	
102	0630407	4	Screw 1/4 x 5/8	
104	2600279	2	Hinge	
105	3311402	8	Nut 1/4	
106	3573144	2	Plate, Latch	
107	3900251	8	Screw 1/4 x 3/8	
108	3960418	53 in/ 1.4m	Seal	
109	1001242373	2	Latch	
110	1001265860	1	Panel, MTB	

FIGURE 2-40. KEYSWITCH INSTALLATION

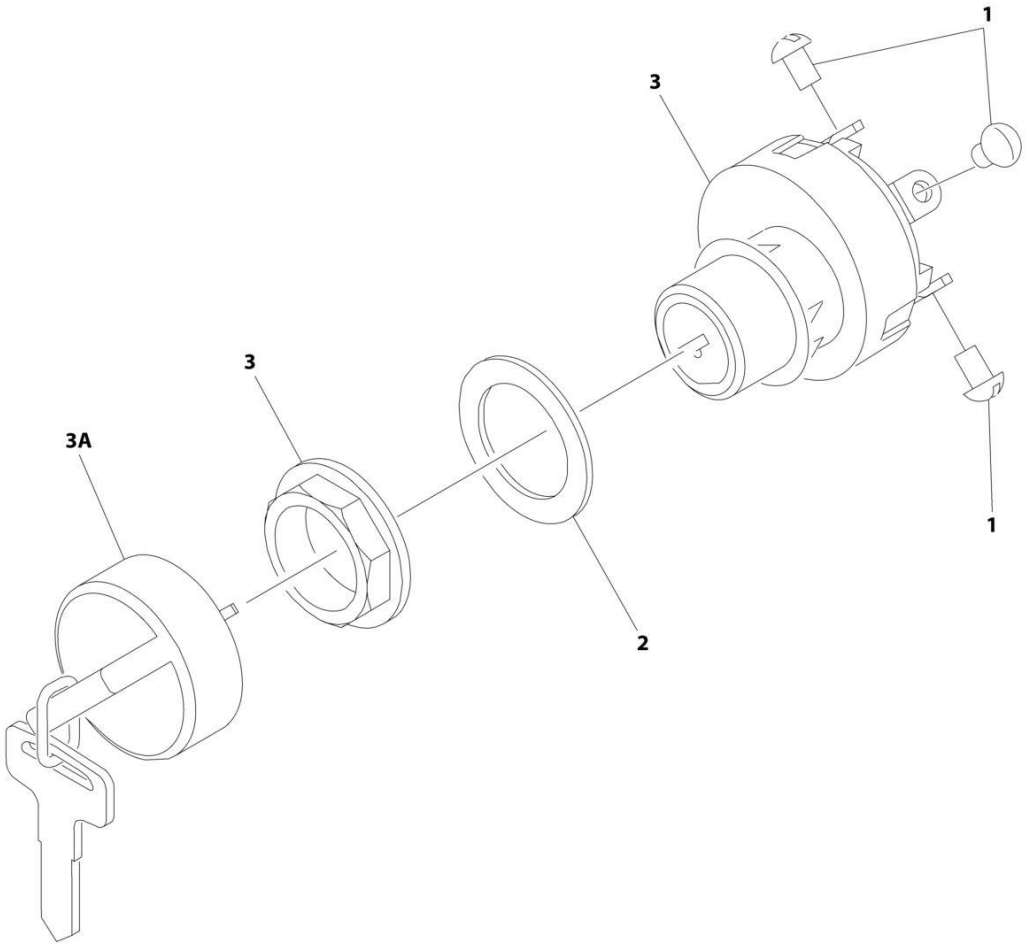

FIGURE 2-40. KEYSWITCH INSTALLATION

ITEM	PART NUMBER	QTY	DESCRIPTION	REV
	0259666	Ref	KEYSWITCH INSTALLATION	B
1	3910804	6	Screw #8 x 1/8	
2	1001151393	1	Shim .063	
3	4360469	1	Keyswitch	
3A	2860030	1	Key, Replacement	

FIGURE 2-41. LIGHT PANEL INSTALLATION

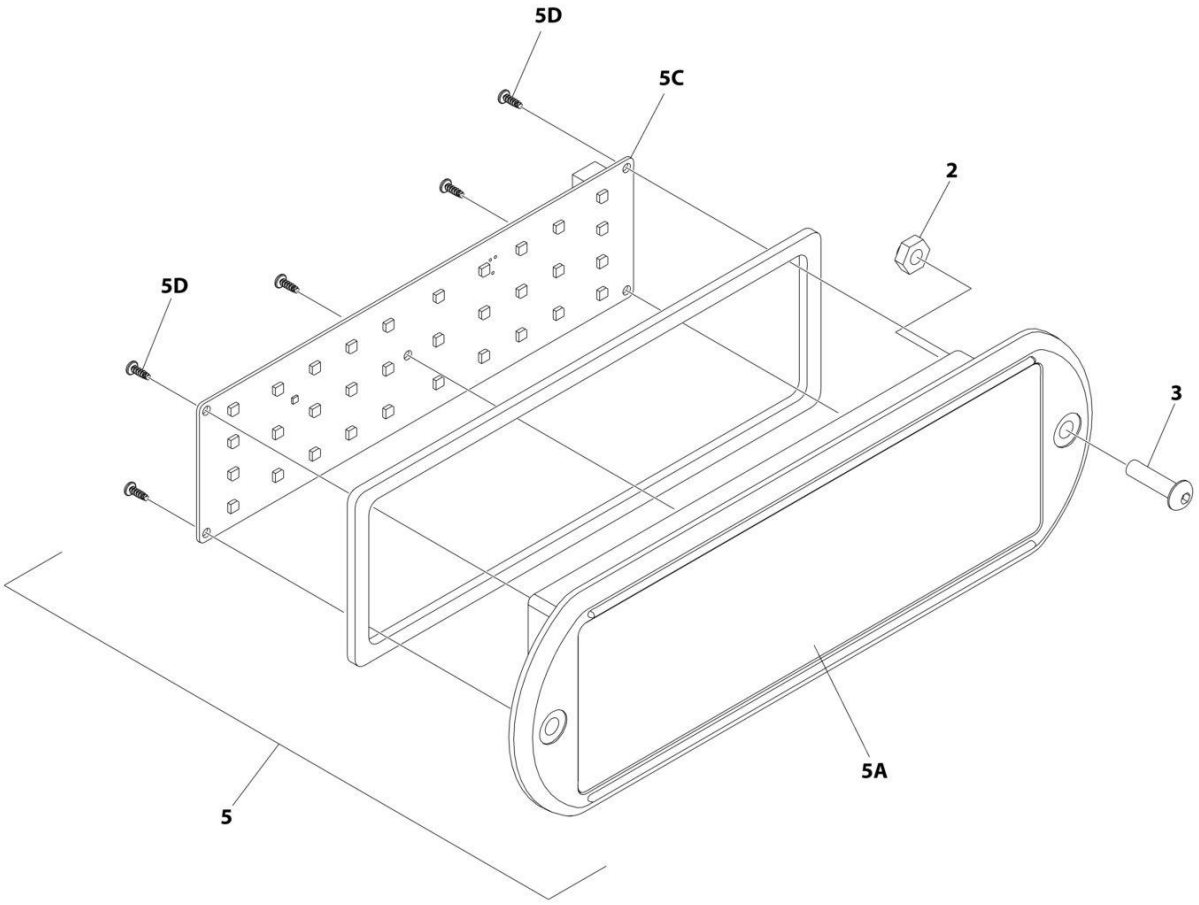

FIGURE 2-41. LIGHT PANEL INSTALLATION

ITEM	PART NUMBER	QTY	DESCRIPTION	REV
	1001233959	Ref	LIGHT PANEL INSTALLATION	C
2	3300408	2	Nut, Nylon Insert	
3	0630518	2	Screw #10 x 3/4	
5	1001237546	1	Light Panel Assembly	H
5A	1001236091	1	Lens, I-Con	
5C	1001187807	1	Panel, LED Light	
5D		Ref	Screw	

FIGURE 2-42. ALARMS INSTALLATION

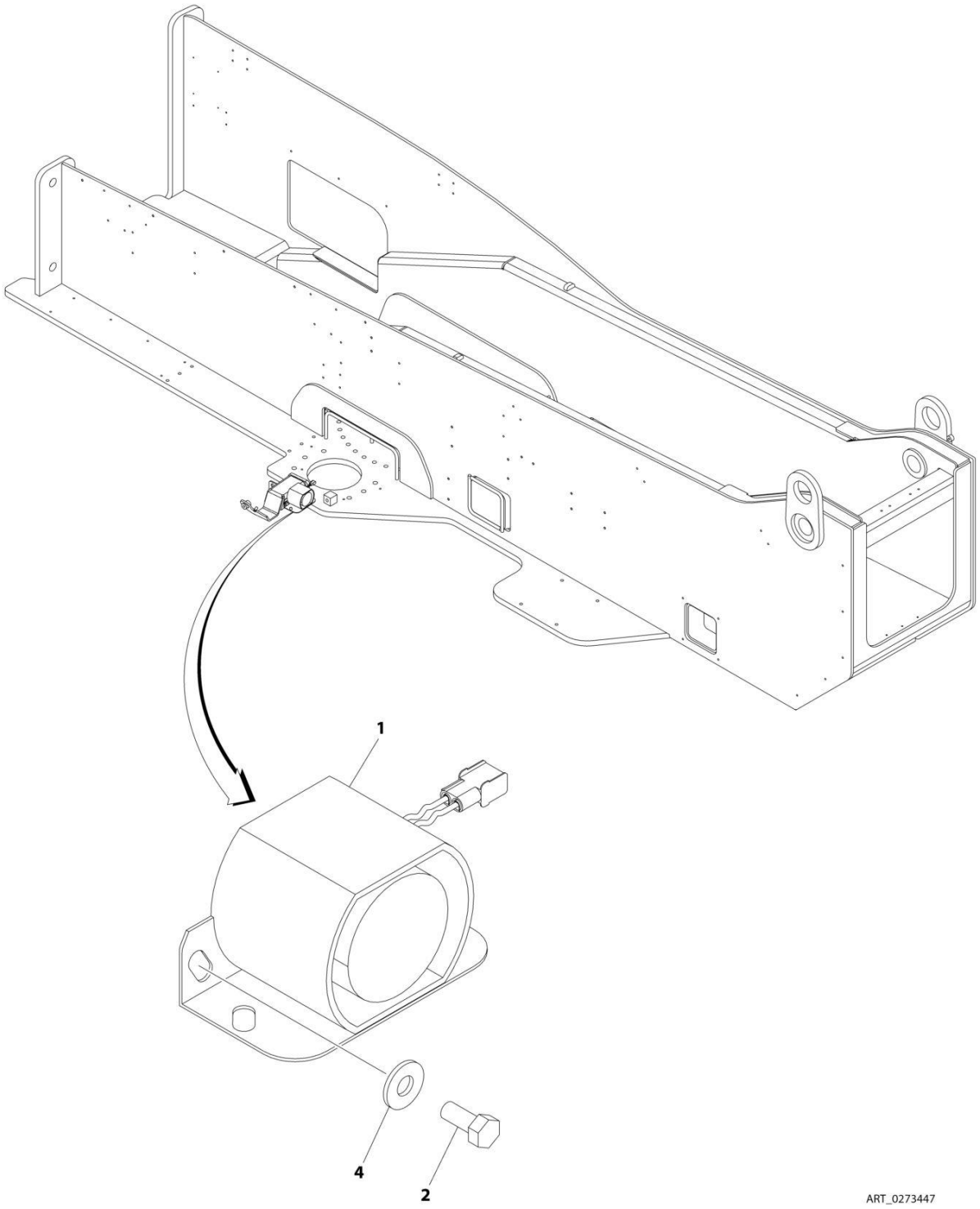

FIGURE 2-42. ALARMS INSTALLATION

ITEM	PART NUMBER	QTY	DESCRIPTION	REV
	0273447	Ref	ALARMS INSTALLATION	B
1	0257887	1	Alarm	
1	0140032	1	Alarm	
1	2820035	6 in/15cm	Loom	
1	4460424	1	Plug	
1	4460268	2	Socket, Female	
2	0641506	2	Bolt 6/16 x 3/4	
4	4751500	AR	Washer 5/16	

FIGURE 2-43. BACKUP ALARM (WHITE NOISE) INSTALLATION

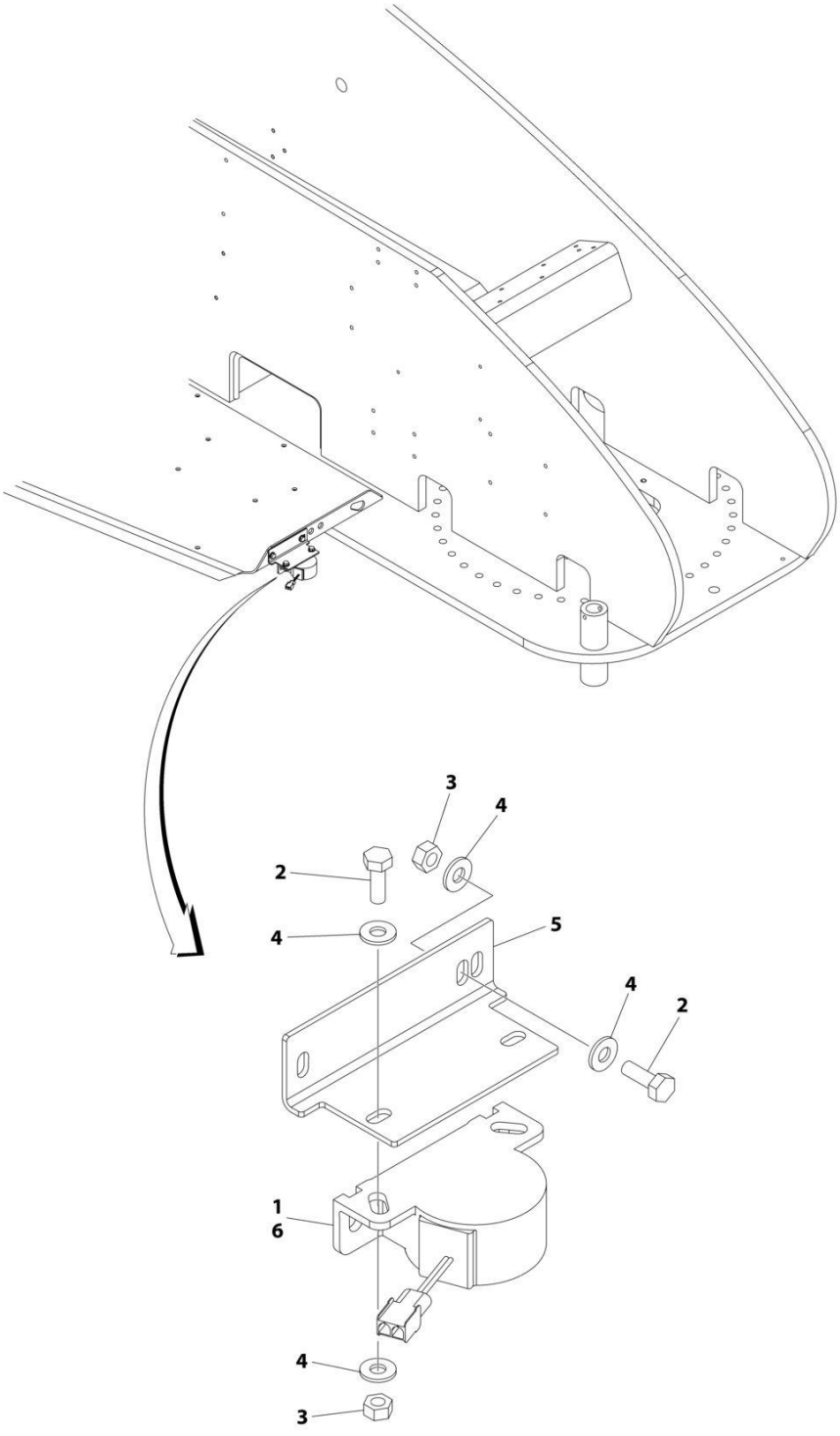

FIGURE 2-43. BACKUP ALARM (WHITE NOISE) INSTALLATION

ITEM	PART NUMBER	QTY	DESCRIPTION	REV
	1001239281	Ref	BACKUP ALARM (WHITE NOISE) INSTALLATION	A
1	0100048	AR	Grease, Dielectric	
2	0641406	4	Bolt 1/4 x 3/4	
3	3311405	4	Nut 1/4	
4	4711400	8	Washer 1/4	
5	1001231886	1	Plate	
6	1001243734	1	Alarm	
6	1001184682	1	Alarm	
6	4460424	1	Plug	
6	4460268	2	Socket, Female	

FIGURE 2-44. BACKUP ALARM AMBIENT (WHITE NOISE) INSTALLATION

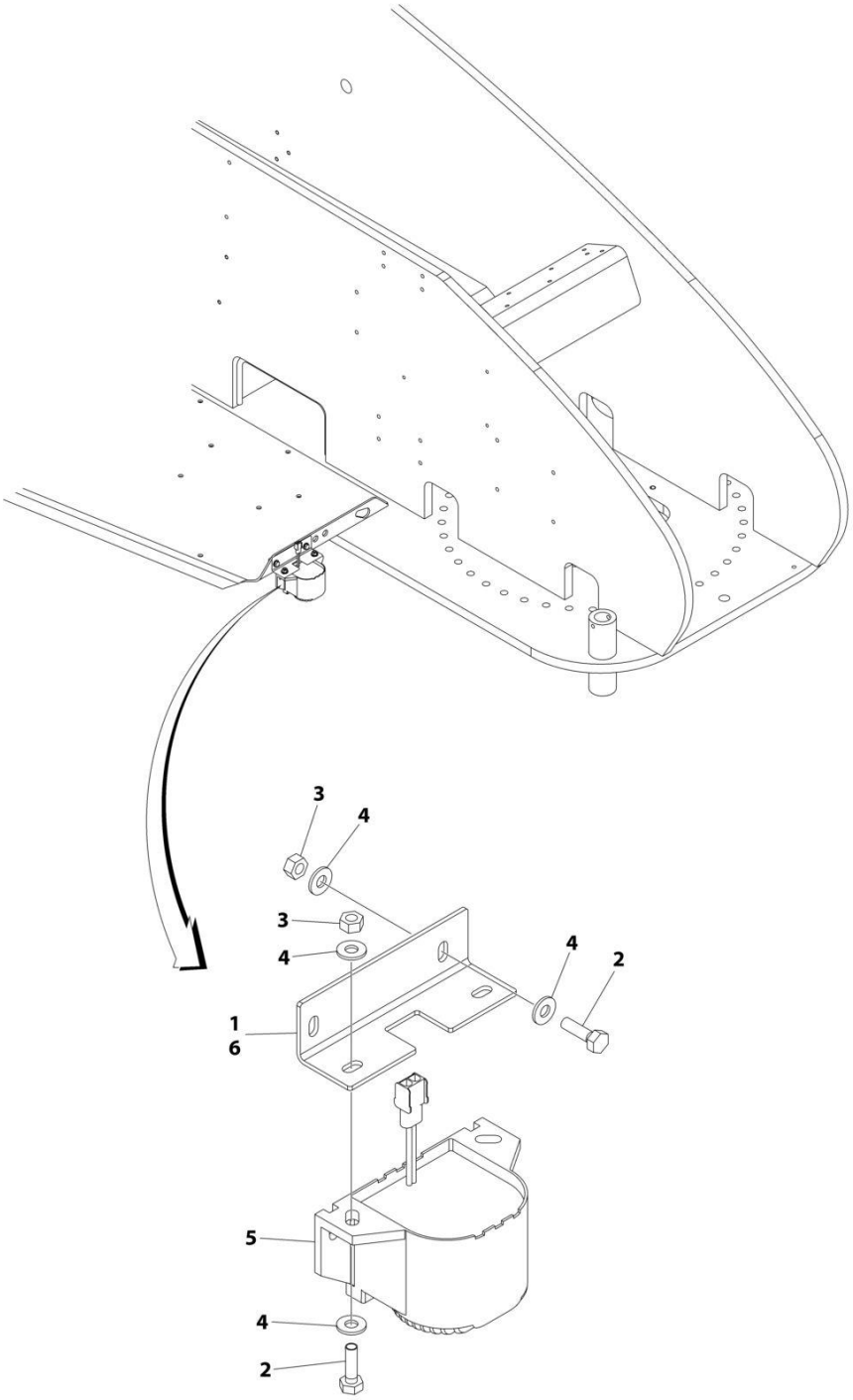

FIGURE 2-44. BACKUP ALARM AMBIENT (WHITE NOISE) INSTALLATION

ITEM	PART NUMBER	QTY	DESCRIPTION	REV
	1001241383	Ref	ALARM AMBIENT (WHITE NOISE) INSTALLATION	A
1	0100048	AR	Grease, Dielectric	
2	0641407	4	Bolt 1/4 x 7/8	
3	3311405	4	Nut 1/4	
4	4711400	8	Washer 1/4	
5	1001243731	1	Alarm	
5	1001182806	1	Alarm	
5	4460424	1	Plug	
5	4460268	2	Socket, Female	
6	1001243849	1	Plate	

FIGURE 2-45. STROBE LIGHT INSTALLATION (AMBER)

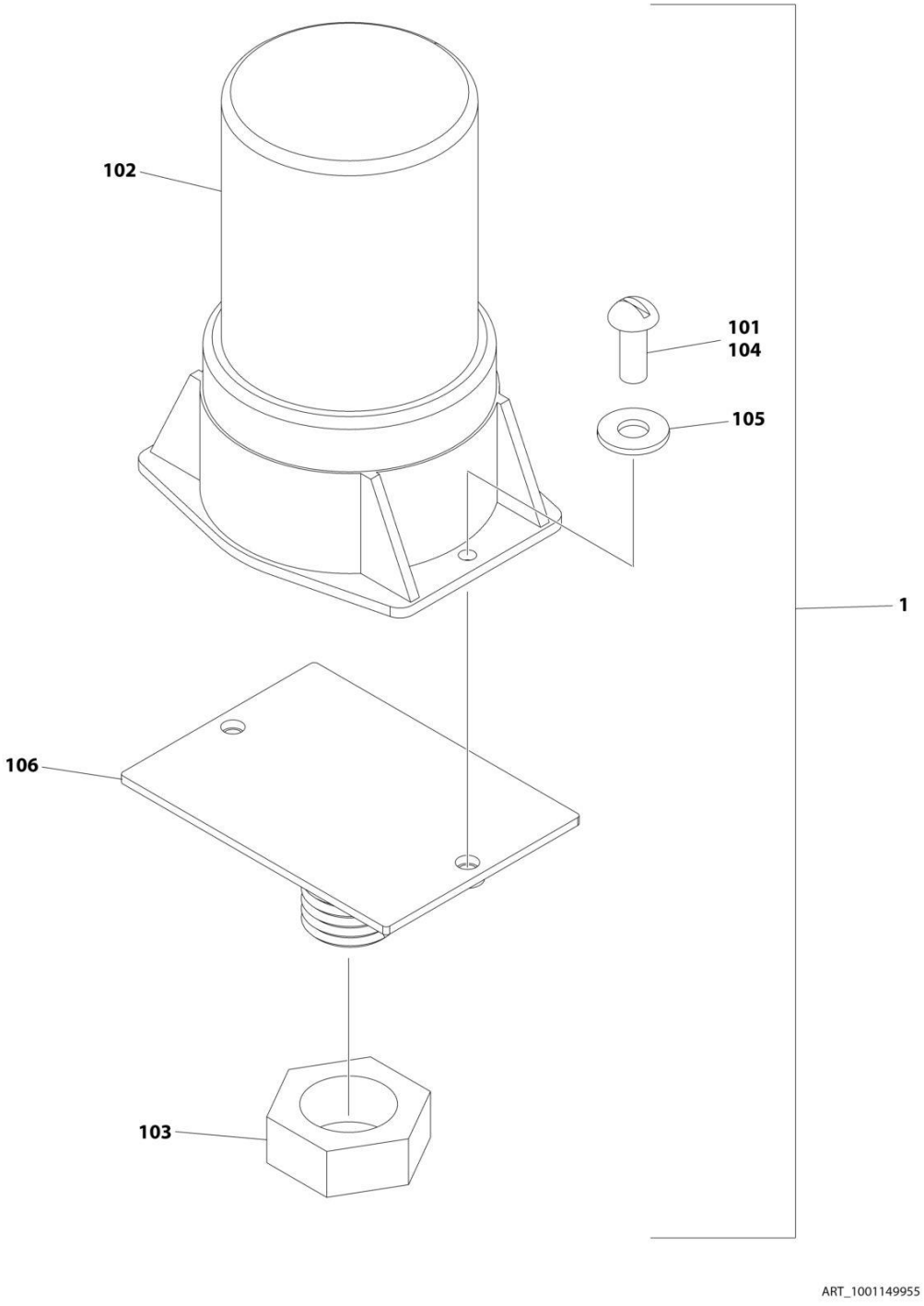

FIGURE 2-45. STROBE LIGHT INSTALLATION (AMBER)

ITEM	PART NUMBER	QTY	DESCRIPTION	REV
	1001149955	Ref	STROBE LIGHT INSTALLATION (AMBER)	B
1	1001150406	1	Strobe Light Assembly (Includes Items 101-106)	D
2	1001149818	1	Harness, Strobe Light (Not Shown - See Separate Breakdown in ELECTRICAL SECTION)	
101	0100035	AR	Compound, Locking	
102	2920161	1	Strobe Light/Harness Assembly	
102	7016319	1	Bulb	
102	7016372	1	Lens	
103	3312602	1	Nut 1	
104	3900085	2	Screw #10 x 1/2	
105	4751000	2	Washer 1/4	
106	1001149994	1	Mount Strobe	

FIGURE 2-46. STROBE LIGHT INSTALLATION (BLUE)

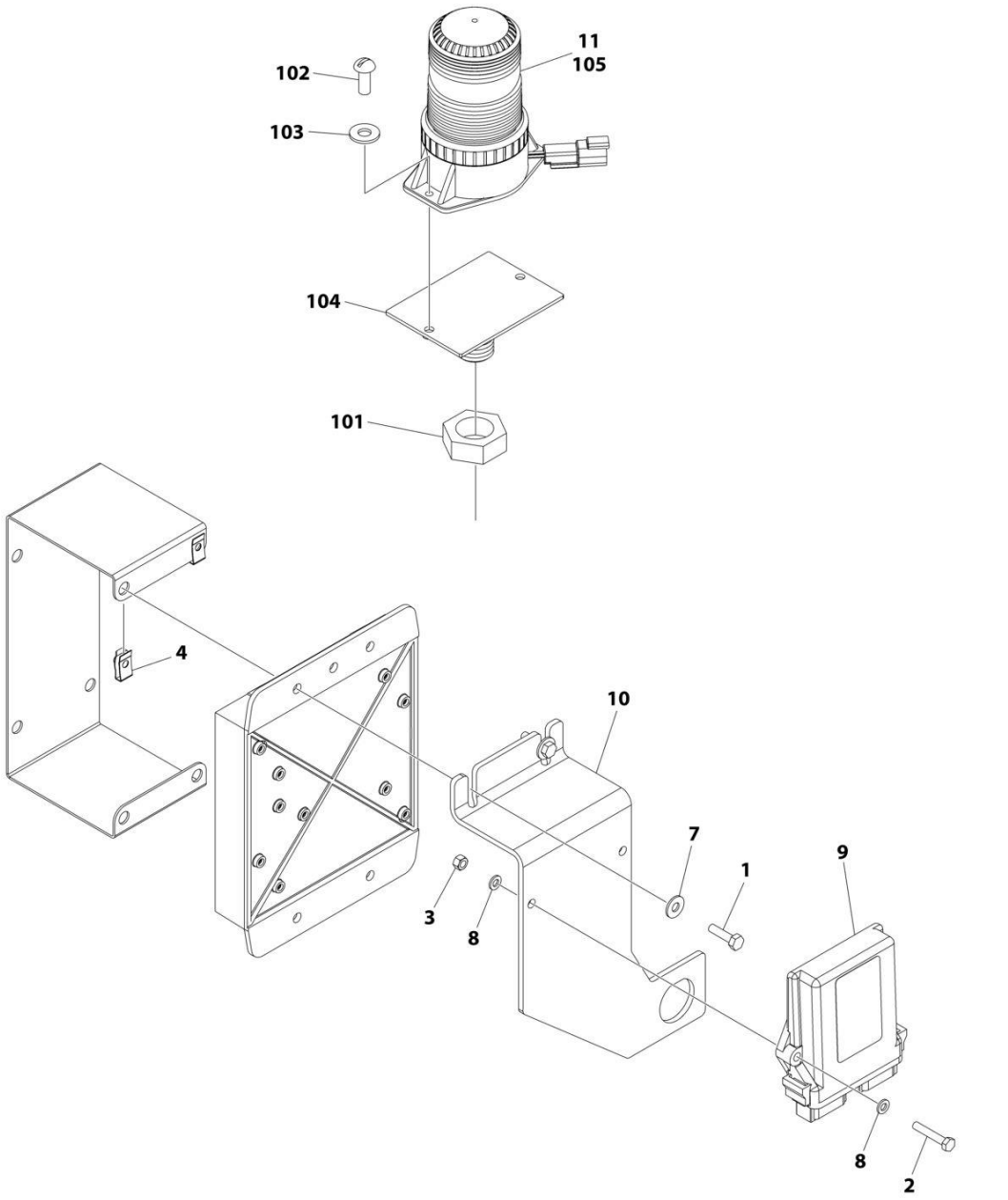

FIGURE 2-46. STROBE LIGHT INSTALLATION (BLUE)

ITEM	PART NUMBER	QTY	DESCRIPTION	REV
	1001244026	Ref	STROBE LIGHT INSTALLATION (BLUE)	A
1	0641408	2	Bolt 1/4 x 1	
2	0700615	2	Bolt M6 x 35	
3	3290607	2	Nut M6 x 1	
4	3300454	2	Nut 1/4	
5	4240032	AR	Tie-Strap (Not Shown)	
6	4460488	AR	Mounting Base (Not Shown)	
7	4751400	2	Washer 1/4	
8	4811700	4	Washer M6	
9	1001142683	1	Module, Control Beacon	
10	1001142719	1	Bracket	
11	1001217005	1	Blue Beacon Light Kit (See Items 101-105 for Breakdown)	
12	1001142736	1	Harness, Beacon Control (Not Shown - See Separate Breakdown in ELECTRICAL SECTION)	
101	3312602	1	Nut 1/4	
102	3900085	2	Screw 10 x 1/2	
103	4751000	2	Washer #10	
104	1001149994	1	Mount, Beacon	
105	1001200910	1	Light, Strobe	
105	7028909	1	Connector - 2 Position	
105	4460943	2	Pin, Male	

FIGURE 2-47. STROBE LIGHT INSTALLATION (RED)

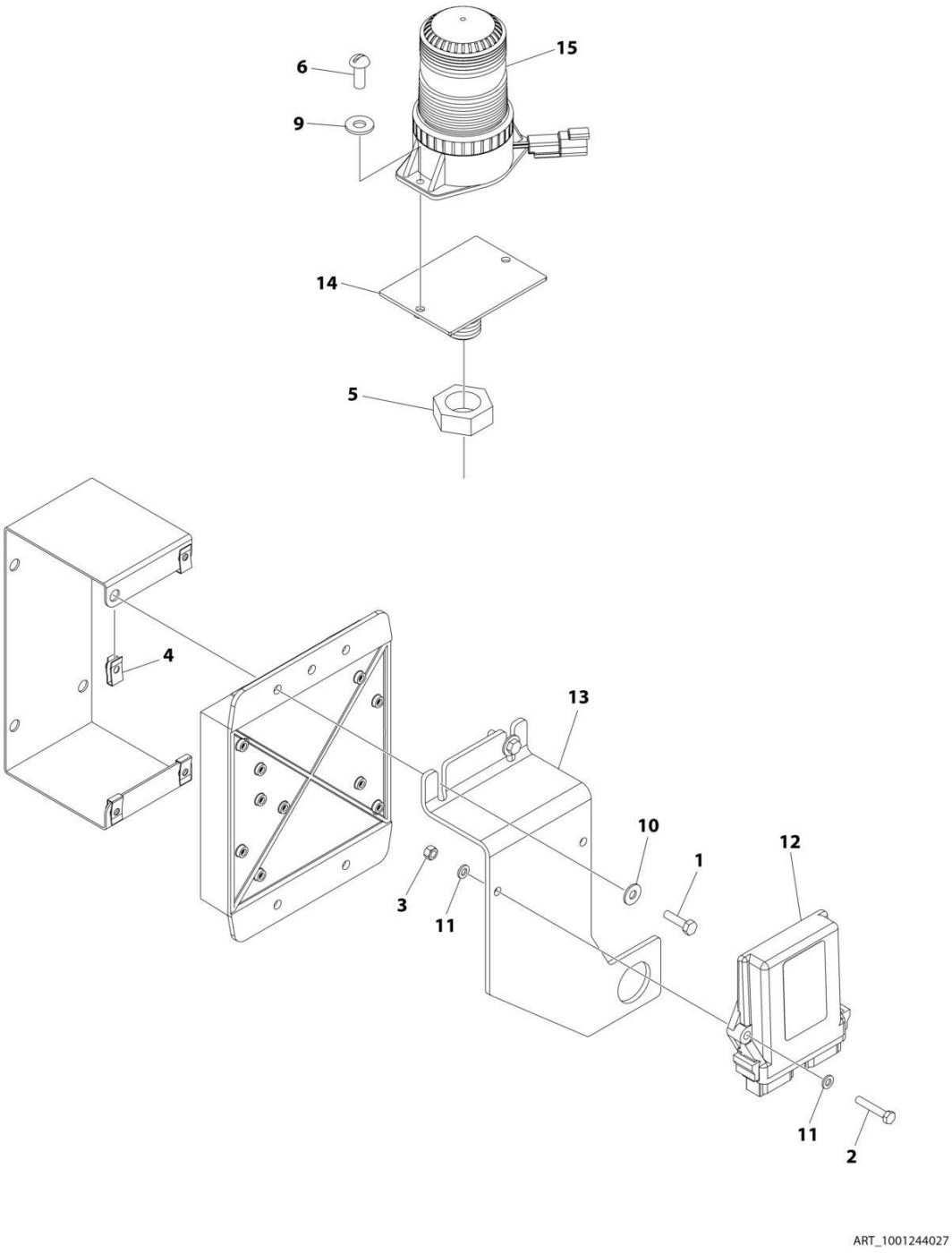

FIGURE 2-47. STROBE LIGHT INSTALLATION (RED)

ITEM	PART NUMBER	QTY	DESCRIPTION	REV
	1001244027	Ref	STROBE LIGHT INSTALLATION (RED)	A
1	0641408	2	Bolt 1/4 x 1	
2	0700615	2	Bolt M6 x 35	
3	3290607	2	Nut M6 x 1	
4	3300454	2	Nut	
5	3312602	1	Nut 1	
6	3900085	2	Screw 10 x 1/2	
7	4240032	AR	Tie-Strap (Not Shown)	
8	4460488	AR	Mounting Base (Not Shown)	
9	4751000	2	Washer #10	
10	4751400	2	Washer 1/4	
11	4811700	4	Washer M6	
12	1001142683	1	Module, Control Beacon	
13	1001142719	1	Bracket	
14	1001149994	1	Mount, Beacon	
15	1001207004	1	Light, Strobe	
15	7028909	1	Connector - 2 Position	
15	4460943	2	Pin, Male	
16	1001142736	1	Harness, Beacon Control (Not Shown - See Separate Breakdown in ELECTRICAL SECTION)	

FIGURE 2-48. ENGINE TRAY JACK INSTALLATION - DEUTZ TD2011 ENGINES

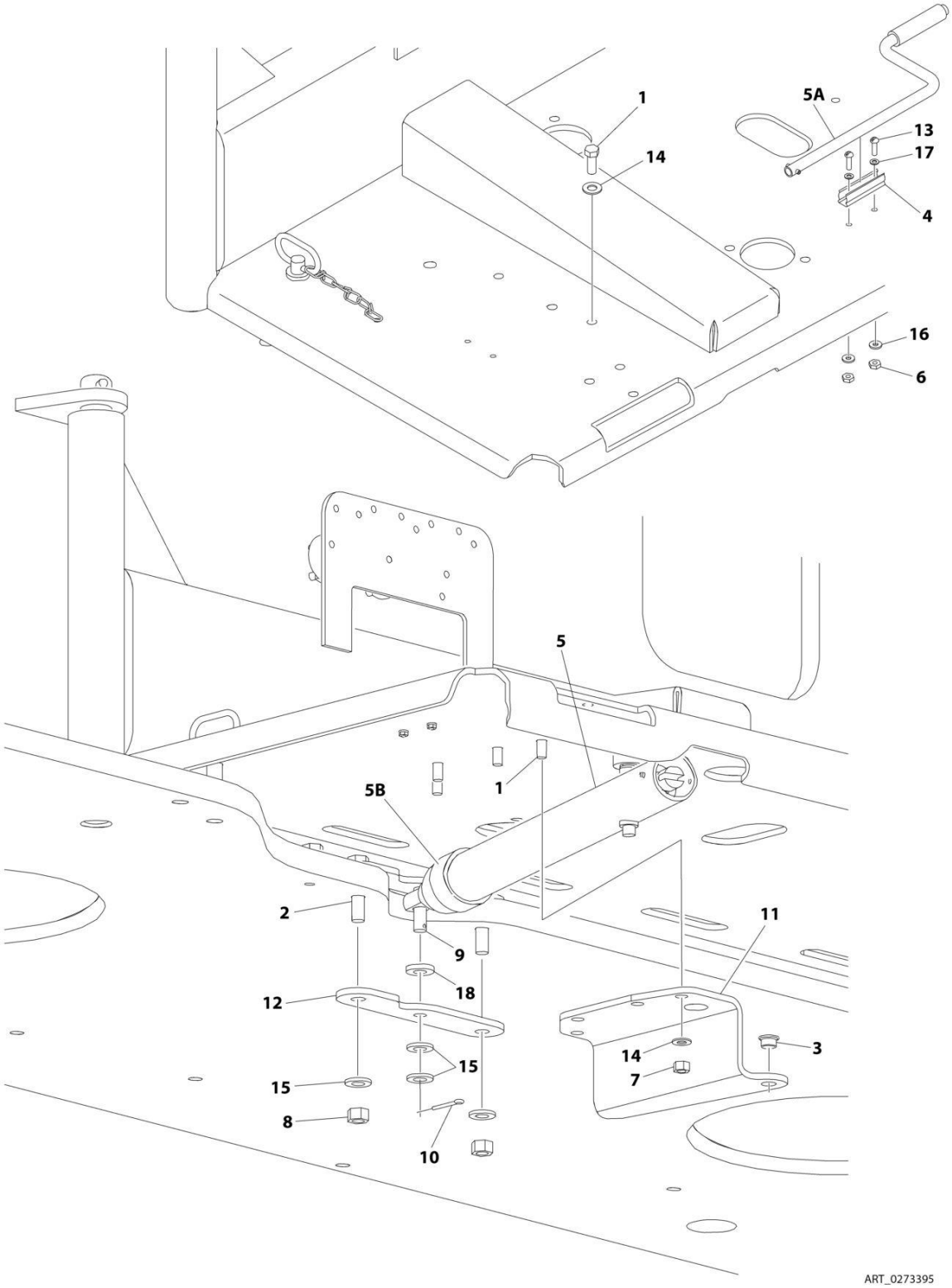

FIGURE 2-48. ENGINE TRAY JACK INSTALLATION - DEUTZ TD2011 ENGINES

ITEM	PART NUMBER	QTY	DESCRIPTION	REV
	0273395	Ref	ENGINE TRAY JACK INSTALLATION - DEUTZ TD2011 ENGINES	B
1	0641608	4	Bolt 3/8 x 1	
2	0641818	2	Bolt 1/2 x 2-1/4	
3	0962051	2	Bearing, Flanged	
4	1380147	1	Clip, Spring	
5	2840016	1	Jack and Handle Assembly	
5A		Ref	Handle Options:	
5A	7016374	1	Burr Manufacturing Brand	
5A	7024598	1	Hammerblow Corp Brand	
5B	7016322	1	Wiper (Burr Manufacturing Brand Only)	
6	3310601	2	Nut #6	
7	3311605	4	Nut 3/8	
8	3311805	2	Nut 1/2	
9	3430816	1	Pin, Clevis	
10	3450404	1	Pin, Cotter 1/8 x 1	
11	3537445	1	Bracket	
12	3574492	2	Plate	
13	3910608	2	Screw #6 x 1/2	
14	4711600	8	Washer 3/8	
15	4711800	4	Washer 1/2	
16	4750600	2	Washer #6	
17	4770600	2	Starwasher #6	
18	4891800	1	Washer 1/2	

FIGURE 2-49. ENGINE TRAY JACK INSTALLATION - DEUTZ TCD2.9L4 ENGINES AND DEUTZ TCD2.9L4 (STAGE V) ENGINES

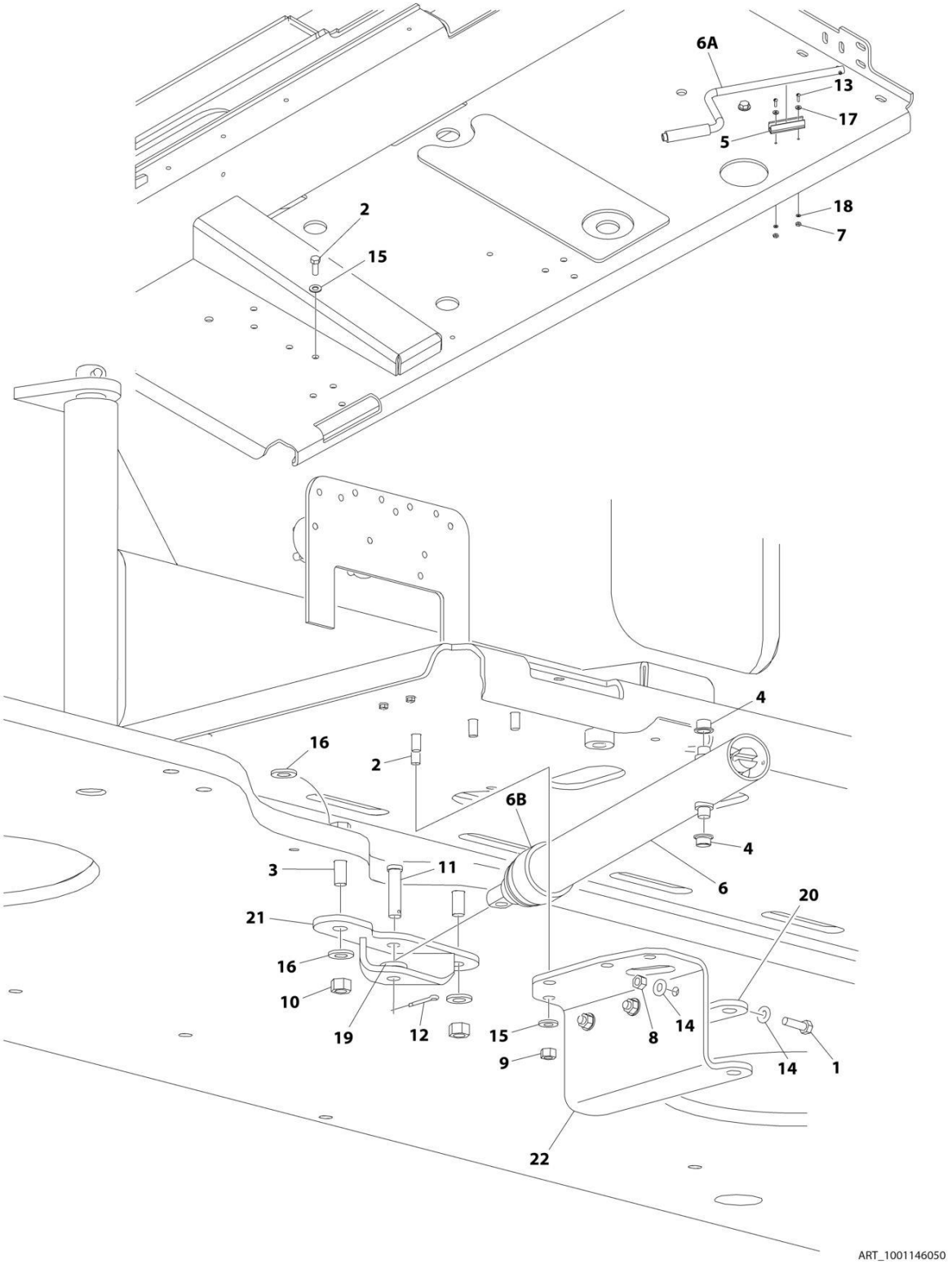

FIGURE 2-49. ENGINE TRAY JACK INSTALLATION - DEUTZ TCD2.9L4 ENGINES AND DEUTZ TCD2.9L4 (STAGE V) ENGINES

ITEM	PART NUMBER	QTY	DESCRIPTION	REV
	1001146050	Ref	ENGINE TRAY JACK INSTALLATION - DEUTZ TCD2.9L4 ENGINES	B
1	0641509	3	Bolt 5/16 x 1-1/8	
2	0641608	4	Bolt 3/8 x 1	
3	0641816	2	Bolt 1/2 x 2	
4	0962051	2	Bearing, Flanged	
5	1380147	1	Clip, Spring	
6	2840016	1	Jack and Handle Assembly	
6A		Ref	Handle Options:	
6A	7016374	1	Burr Manufacturing Brand (Identified by 4in handle offset)	
6A	7024598	1	Hammerblow Corp Brand (Identified by 4-1/2in handle offset)	
6B	7016322	1	Wiper (Burr Manufacturing Brand Only)	
7	3310601	2	Nut #6	
8	3311505	3	Nut 5/16	
9	3311605	4	Nut 3/8	
10	3311805	2	Nut 1/2	
11	3430816	1	Pin, Clevis	
12	3450404	1	Pin, Cotter 1/8 x 1	
13	3910608	2	Screw #6 x 1/2	
14	4711500	6	Washer 5/16	
15	4711600	8	Washer 3/8	
16	4711800	4	Washer 1/2	
17	4750600	2	Washer #6	
18	4770600	2	Starwasher #6	
19	4891800	1	Washer 1/2	
20	1001131482	1	Plate, Jack Bracket	
21	1001135497	1	Support, Engine Tray Jack	
22	1001143298	1	Plate, Jack Bracket	

FIGURE 2-50. HOODS INSTALLATION - DEUTZ TD2011 ENGINES

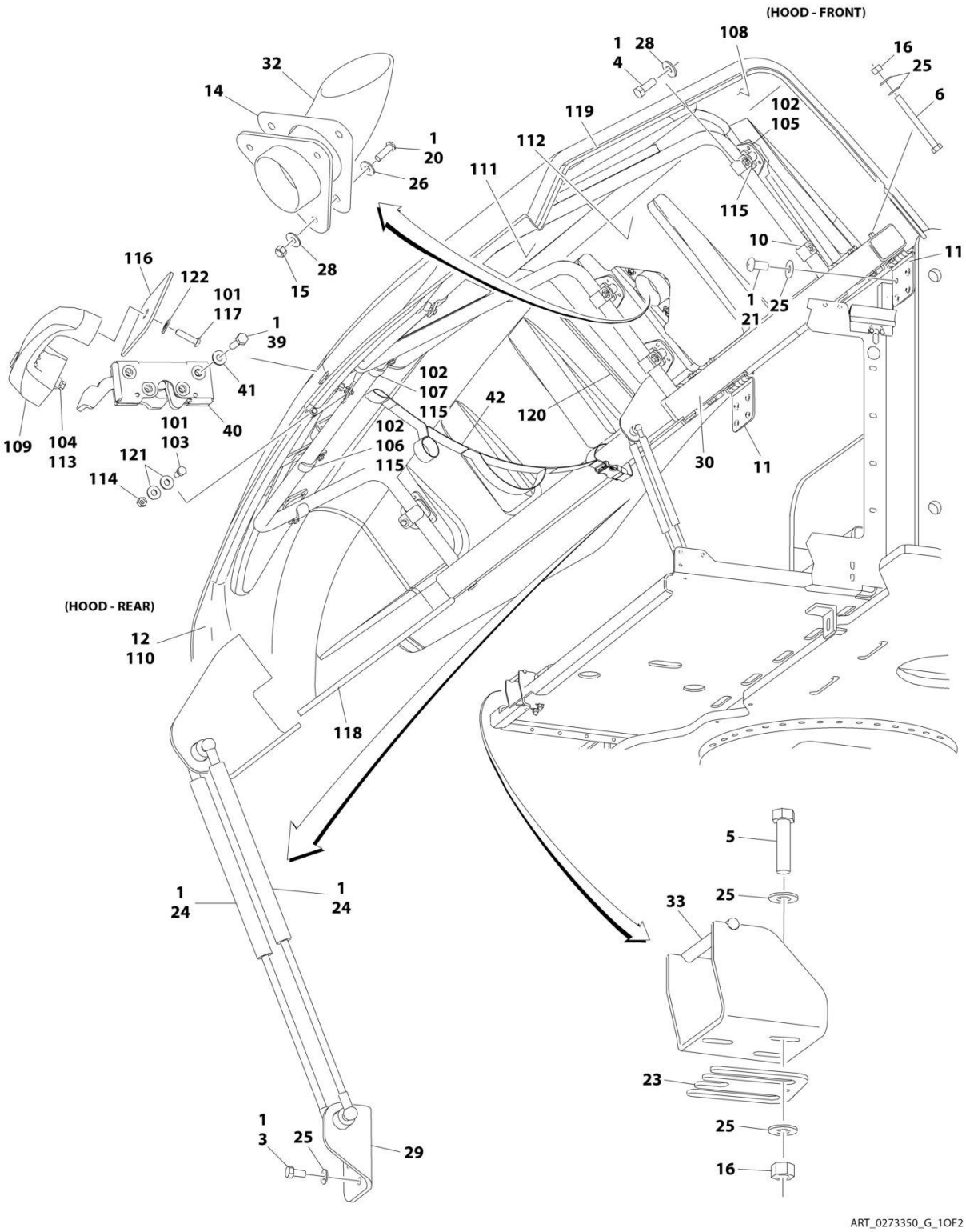

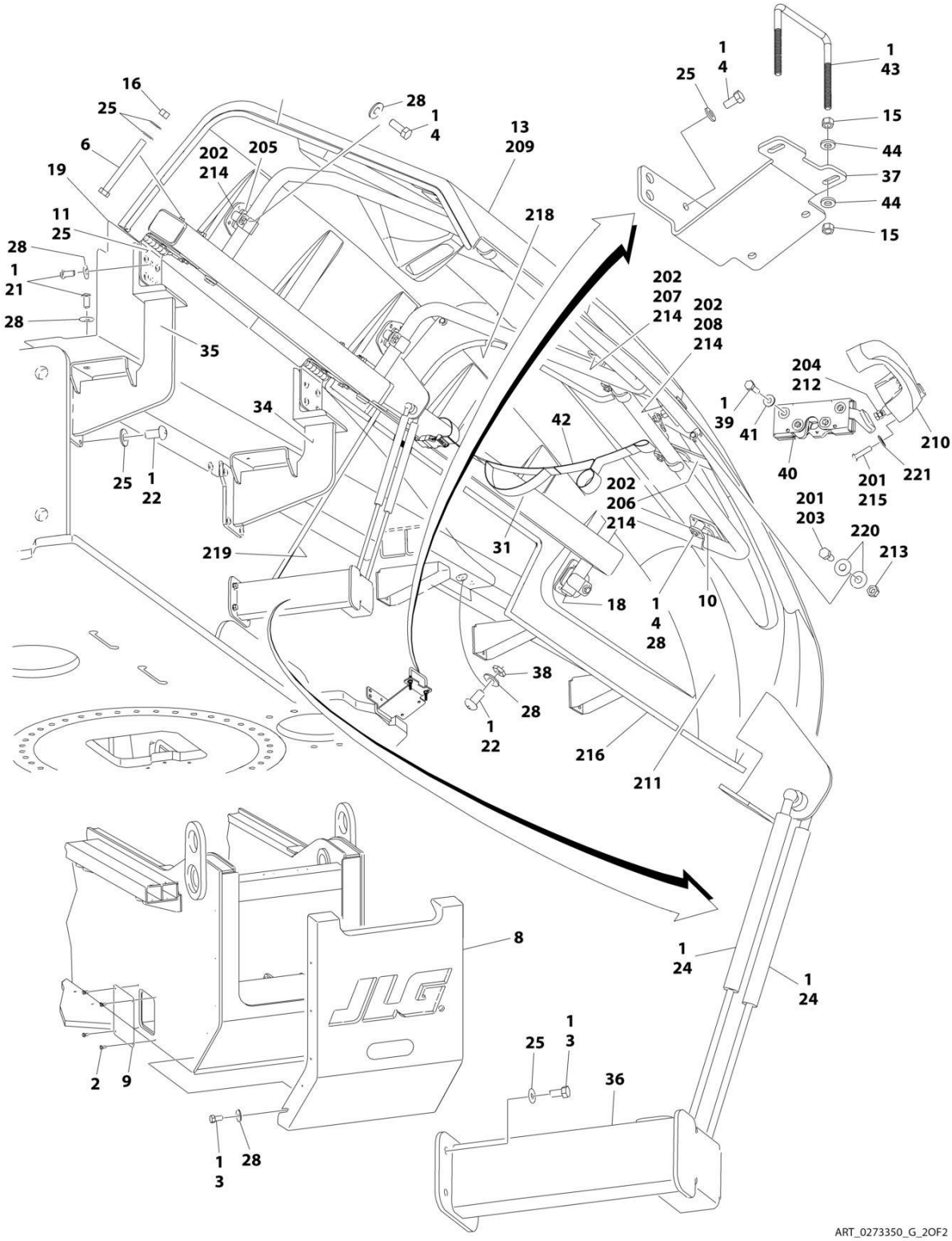
ART_0273350_G_2OF2

FIGURE 2-50. HOODS INSTALLATION - DEUTZ TD2011 ENGINES

ITEM	PART NUMBER	QTY	DESCRIPTION	REV
	0273350	Ref	HOODS INSTALLATION - DEUTZ TD2011 ENGINES	G
1	0100011	AR	Compound, Locking	
2	0791605	8	Screw 3/8 x 3/4	
3	0641606	17	Bolt 3/8 x 3/4	
4	0641608	19	Bolt 3/8 x 1	
5	0641610	3	Bolt 3/8 x 1-1/4	
6	0641630	12	Bolt 3/8 x 3-3/4	
8	1671109	1	Cover, Turntable	
9	1671118	2	Cover, Pin Access	
10	2080051	16	Clamp	
11	2600280	4	Hinge	
12	1671192	1	Hood, Engine Side (See Items 101-122 for Breakdown)	
		Ref	Note: Replacement Decals Must Be Ordered Separately - See DECAL SECTION.	
13	1671194	1	Hood, Tank Side (See Items 201-221 for Breakdown)	
		Ref	Note: Replacement Decals Must Be Ordered Separately - See DECAL SECTION.	
14	2820141	1	Shield, Heat	
15	3311601	7	Nut 3/8	
16	3311605	15	Nut 3/8	
18	3520186	6	Plug	
19	3574533	1	Trough, Powertrack	
20	3900232	3	Screw 3/8 x 1-1/4	
21	3900283	29	Screw 3/8 x 3/4	
22	3900316	10	Screw 3/8 x 1	
23	4071048	3	Shim	
24	4160194	4	Spring, Gas	
25	4711600	64	Washer 1/4	
26	4740500	3	Washer, Nylon	
28	4751600	47	Washer 3/8	
29	4341001	1	Mount, Gas Spring	
30	4340996	1	Support, Engine Side Hood	
31	4340995	1	Support, Tank Side Hood	
32	4846503	1	Stack, Exhaust	
33	0903154	1	Bracket, Latch	
34	4846871	1	Support, Front Hood	
35	4846872	1	Support, Rear Hood	
36	4341000	1	Mount, Gas Spring	
37	1001250301	1	Bracket, Tank Side Striker	
38	88662523	2	Nut, Tinnerman Only	
39	0641408	8	Bolt 1/4 x 1	
40	2940173	2	Latch, Rotary	
41	4711400	AR	Washer 1/4	
42	1001160505	2	Strap	
43	1001243414	1	U - Bolt	
44	4891600	4	Washer 3/8	
	1671192	Ref	ENGINE SIDE HOOD ASSEMBLY	B
101	0100011	AR	Compound, Locking	
102	0100081	AR	Adhesive	
103	0641506	10	Bolt 5/16 x 3/4	

ITEM	PART NUMBER	QTY	DESCRIPTION	REV
104	0760608	1	Bolt M6 x 16	
105	0902746	7	Bracket	
106	0902761	1	Bracket	
107	0903161	1	Bracket	
108	1671191	1	Hood, Engine Side Front	
109	2560187	1	Handle	
110	2680496	1	Hood, Engine Side Rear	
111	2820145	1	Insulation, Sound Absorbing	
112	2820146	1	Insulation, Noise Absorbing	
113	3290601	1	Nut M6 x 1	
114	3311501	10	Nut 5/16	
115	3340877	9	Pad	
116	3575782	1	Plate	
117	3900363	2	Screw M6 x 25	
118	3960464	12.1 ft /3.7m	Seal	
119	4060804	5.1 ft /1.6m	Shield, Flex Trim	
120	4060806	4.1 ft /1.2m	Shield, Flex Trim	
121	4751500	20	Washer 5/16	
122	4811900	2	Washer M8	
	1671194	Ref	TANK SIDE HOOD ASSEMBLY	A
201	0100011	AR	Compound, Locking	
202	0100081	AR	Adhesive	
203	0641506	9	Bolt 5/16 x 3/4	
204	0760608	1	Bolt M6 x 16	
205	0902746	4	Bracket	
206	0902762	1	Bracket	
207	0902763	1	Bracket	
208	0903162	1	Bracket	
209	1671193	1	Hood, Tank Side Front	
210	2560187	1	Handle	
211	2680498	1	Hood, Tank Side Rear	
212	3290601	1	Nut M6 x 1	
213	3311501	9	Nut 5/16	
214	3340877	7	Pad	
215	3900363	2	Screw M6 x 25	
216	3960464	12.4 ft /3.8m	Seal	
217	4060804	4.4 ft /1.3m	Shield, Flex Trim	
218	4060806	3.3 ft/1m	Shield, Flex Trim	
219	4240150	1	Strap	
220	4751500	18	Washer 5/16	
221	4811900	2	Washer M8	

FIGURE 2-51. HOODS INSTALLATION - DEUTZ TCD2.9L4 ENGINES

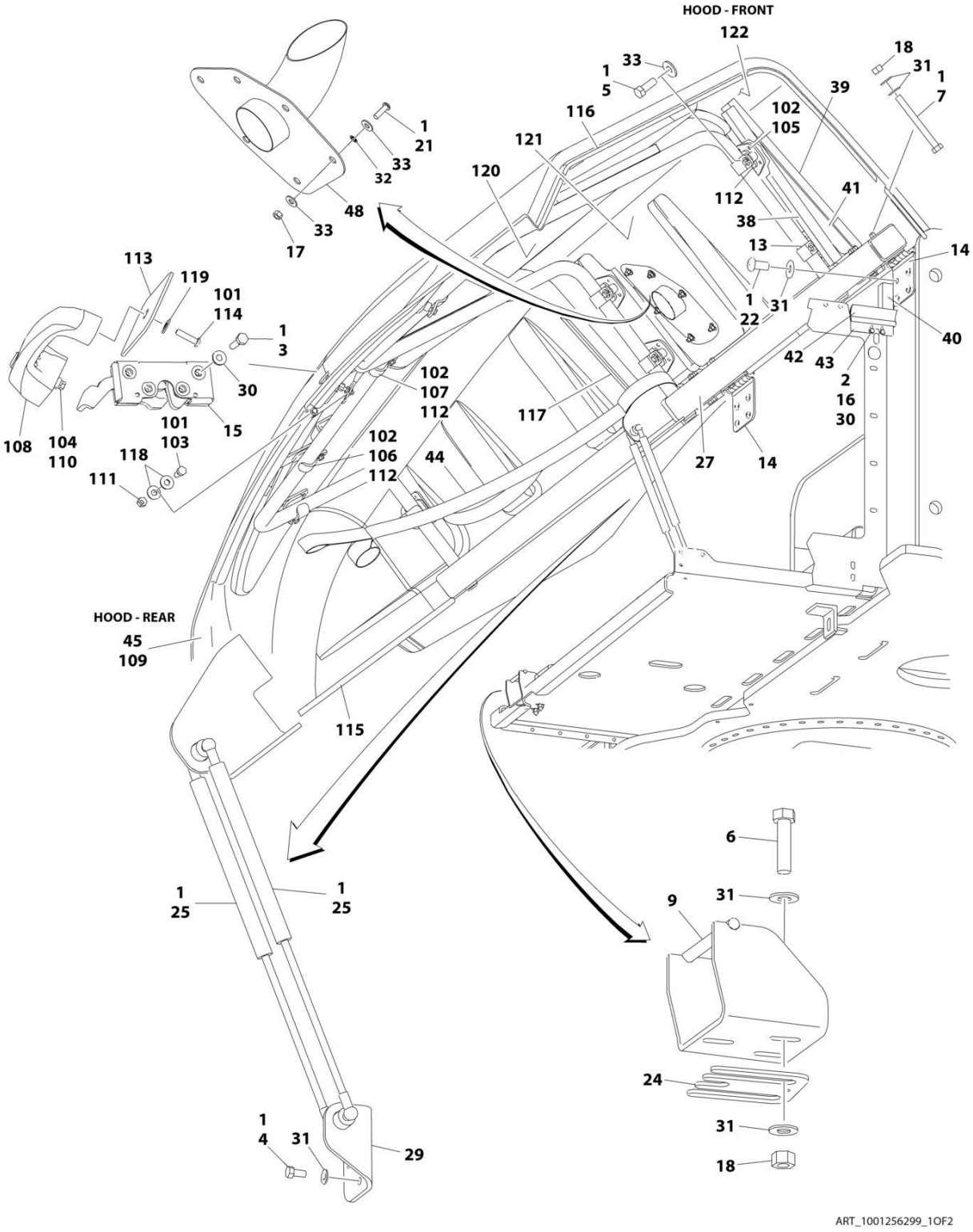

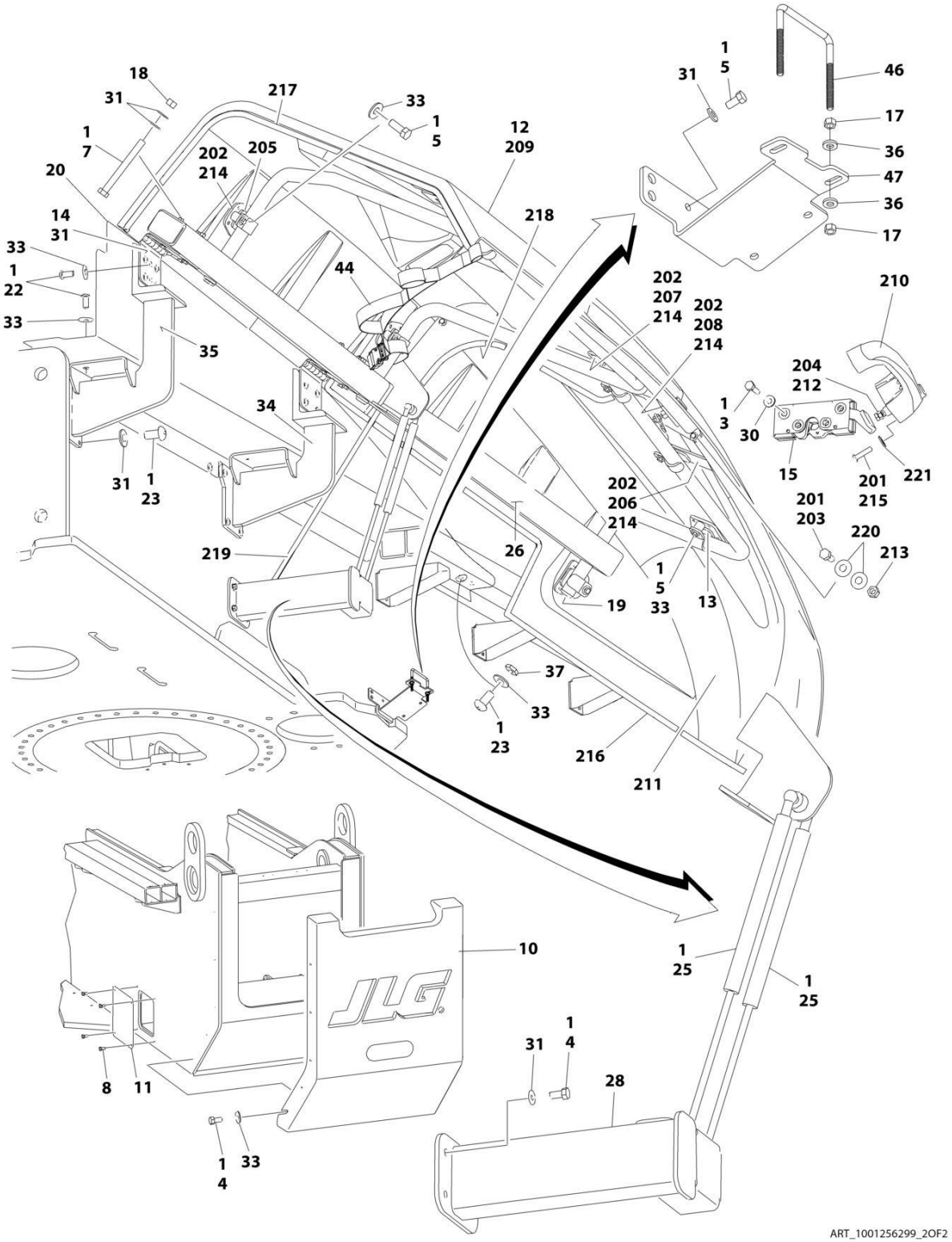
ART_1001256299_2OF2

FIGURE 2-51. HOODS INSTALLATION - DEUTZ TCD2.9L4 ENGINES

ITEM	PART NUMBER	QTY	DESCRIPTION	REV
	1001256299	Ref	HOODS INSTALLATION - DEUTZ TCD2.9L4 ENGINES AND DEUTZ TCD2.9L4 (STAGE V PRE-BUY) ENGINES	A
1	0100011	AR	Compound, Locking	
2	0641406	2	Bolt 1/4 x 3/4	
3	0641408	8	Bolt 1/4 x 1	
4	0641606	17	Bolt 3/8 x 3/4	
5	0641608	19	Bolt 3/8 x 1	
6	0641610	3	Bolt 3/8 x 1-1/4	
7	0641630	12	Bolt 3/8 x 3-3/4	
8	0791605	8	Screw 3/8 x 5/8	
9	0903154	1	Bracket, Engine Side Striker	
10	1671109	1	Cover, Turntable	
11	1671118	2	Cover, Pin Access	
12	1671194	1	Hood, Tank Side (See Items 201-221 for Breakdown)	
13	2080051	16	Clamp	
14	2600280	4	Hinge	
15	2940173	2	Latch, Rotary	
16	3311405	2	Nut 1/4	
17	3311601	10	Nut 3/8	
18	3311605	15	Nut 3/8	
19	3520186	6	Plug	
20	3574533	1	Trough, Powertrack	
21	3900232	6	Screw 3/8 x 1-1/4	
22	3900283	29	Screw 3/8 x 3/4	
23	3900316	10	Screw 3/8 x 1	
24	4071048	3	Shim	
25	4160194	4	Spring, Gas	
26	4340995	1	Support, Tank Side Hood	
27	4340996	1	Support, Engine Side Hood	
28	4341000	1	Mount, Tank Side Gas Spring	
29	4341001	1	Weldment, Gas Spring Mount	
30	4711400	12	Washer 1/4	
31	4711600	64	Washer 1/4	
32	4740500	6	Washer, Nylon	
33	4751600	53	Washer 3/8	
34	4846871	1	Weldment, Rear Hood Support	
35	4846872	1	Weldment, Front Hood Support	
36	4891600	4	Washer 3/8	
37	88662523	2	Nut, Tinnerman	
38	1001140485	1	Seal, Foam Gasket	
39	1001142144	1	Bracket, Hood Baffle	
40	1001146132	1	Seal, Foam Gasket	
41	1001146142	1	Seal, Foam Gasket	
42	1001146178	1	Seal, Hood Frame	
43	1001146183	1	Plate, Hood Frame Baffle	
44	1001160505	2	Strap	
45	1001237125	1	Hood, Engine Side (See Items 101-121 for Breakdown)	
46	1001243414	1	U - Bolt	
47	1001250301	1	Bracket, Tank Side Striker	
48	1001256298	1	Weldment, Exhaust Stack	

ITEM	PART NUMBER	QTY	DESCRIPTION	REV
	1001237125	Ref	ENGINE SIDE HOOD ASSEMBLY	A
101	0100011	AR	Compound, Locking	
102	0100081	AR	Adhesive	
103	0641510	10	Bolt 5/16 x 1-1/4	
104	0760608	1	Bolt M6 x 16	
105	0902746	7	Bracket	
106	0902761	1	Bracket	
107	0903161	1	Bracket	
108	2560187	1	Handle	
109	2680496	1	Hood, Engine Side Rear	
110	3290601	1	Nut M6 x 1	
111	3311501	10	Nut 5/16	
112	3340877	9	Pad	
113	3575782	1	Plate	
114	3900363	2	Screw M6 x 25	
115	3960464	12.1 ft /3.7m	Seal	
116	4060804	5.1 ft /1.6m	Shield, Flex Trim	
117	4060806	4.1 ft /1.2m	Shield, Flex Trim	
118	4751500	20	Washer 5/16	
119	4811900	2	Washer M8	
120	1001117140	AR	Tape, Aluminized Polyester	
121	1001152566	AR	Insulate	
	1671194	Ref	TANK SIDE HOOD ASSEMBLY	A
201	0100011	AR	Compound, Locking	
202	0100081	AR	Adhesive	
203	0641506	9	Bolt 5/16 x 3/4	
204	0760608	1	Bolt M6 x 16	
205	0902746	4	Bracket	
206	0902762	1	Bracket	
207	0902763	1	Bracket	
208	0903162	1	Bracket	
209	1671193	1	Hood, Tank Side Front	
210	2560187	1	Handle	
211	2680498	1	Hood, Tank Side Rear	
212	3290601	1	Nut M6 x 1	
213	3311501	9	Nut 5/16	
214	3340877	7	Pad	
215	3900363	2	Screw M6 x 25	
216	3960464	12.4 ft /3.8m	Seal	
217	4060804	4.4 ft /1.3m	Shield, Flex Trim	
218	4060806	3.3 ft /1m	Shield, Flex Trim	
219	4240150	1	Strap	
220	4751500	18	Washer 5/16	
221	4811900	2	Washer M8	

FIGURE 2-52. HOODS INSTALLATION - DEUTZ TCD2.9L4 (STAGE V) ENGINES

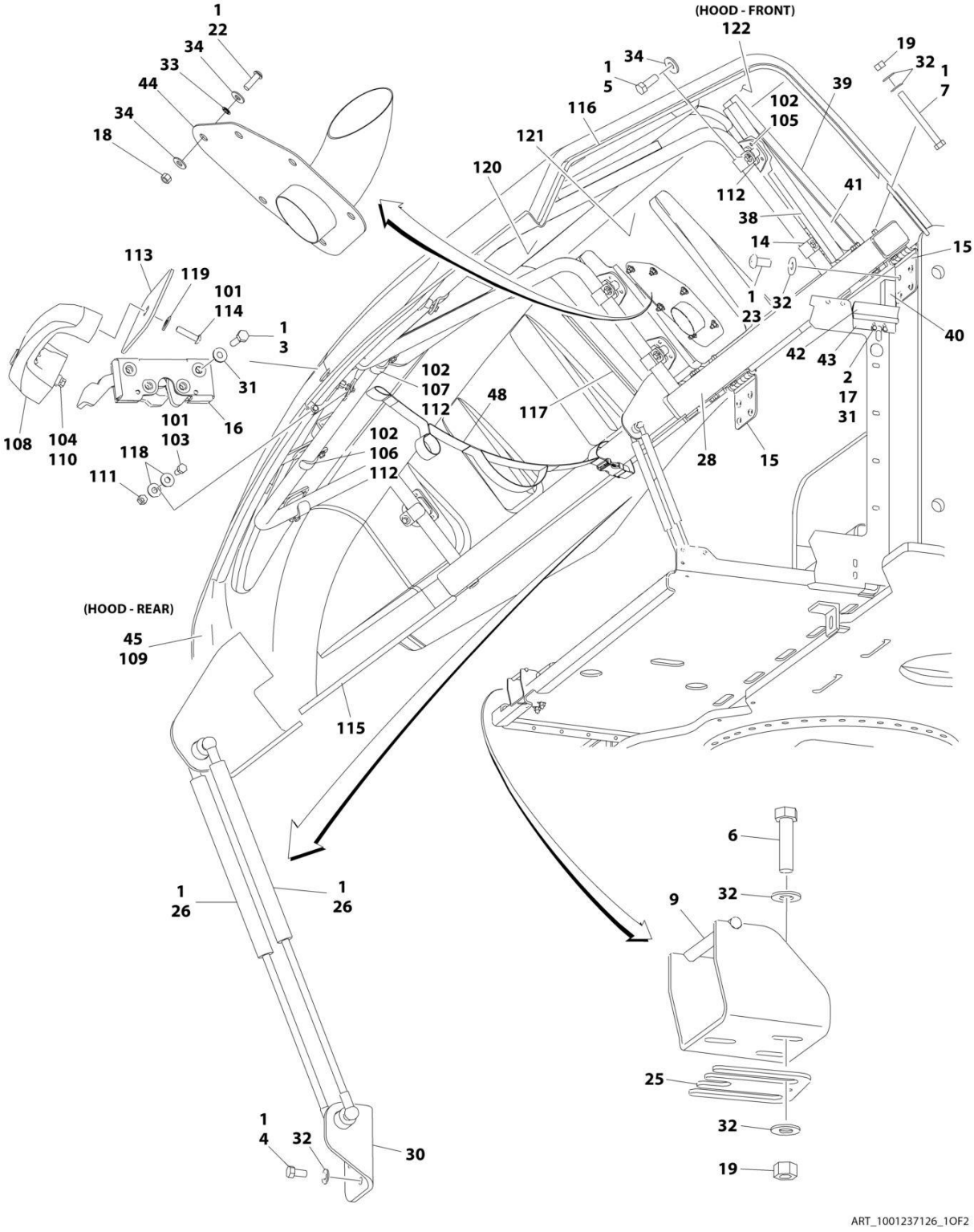

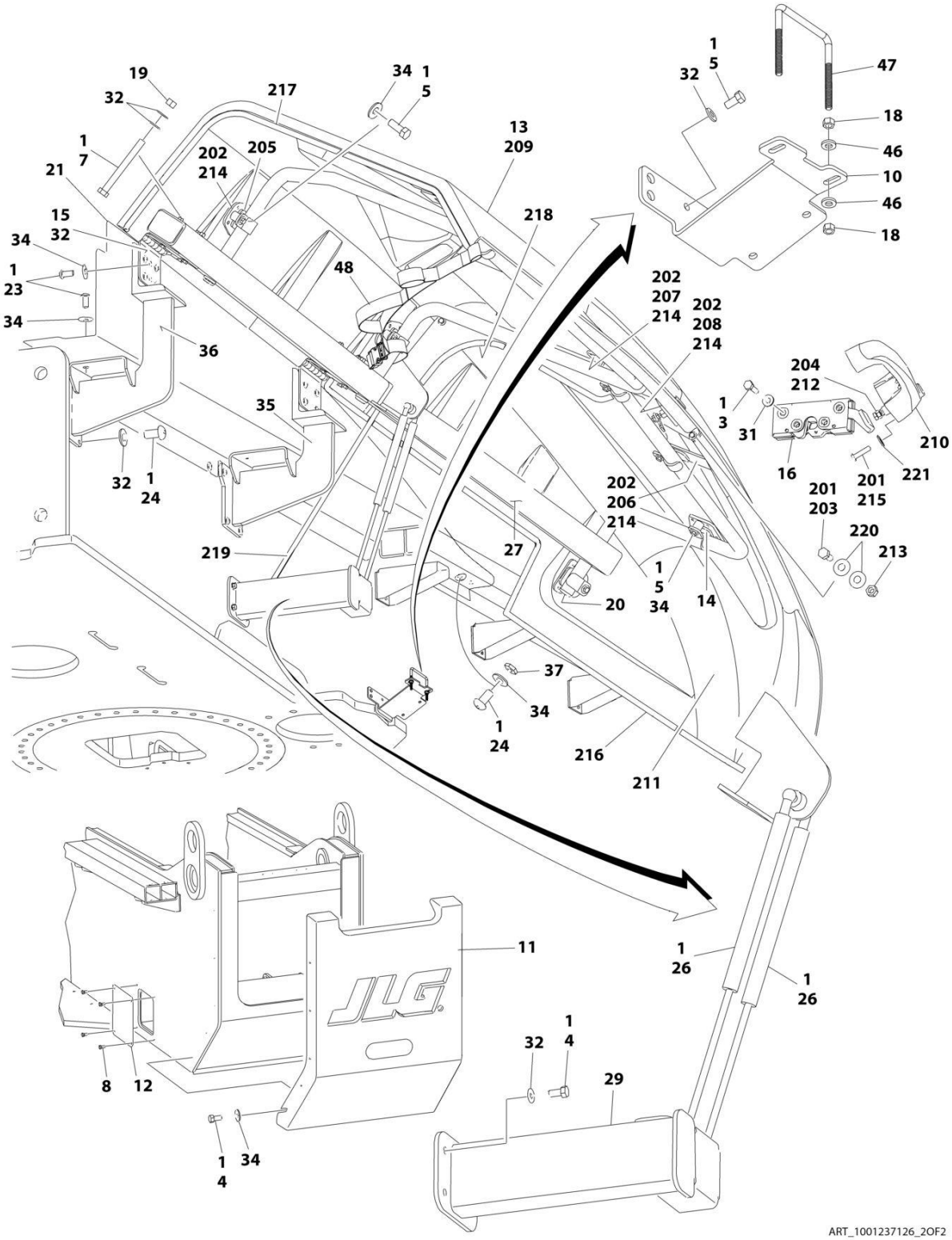
ART_1001237126_2OF2

FIGURE 2-52. HOODS INSTALLATION - DEUTZ TCD2.9L4 (STAGE V) ENGINES

ITEM	PART NUMBER	QTY	DESCRIPTION	REV
	1001237126	Ref	HOODS INSTALLATION - DEUTZ TCD2.9L4 (STAGE V) ENGINES	B
1	0100011	AR	Compound, Locking	
2	0641406	2	Bolt 1/4 x 3/4	
3	0641408	8	Bolt 1/4 x 1	
4	0641606	17	Bolt 3/8 x 3/4	
5	0641608	19	Bolt 3/8 x 1	
6	0641610	3	Bolt 3/8 x 1-1/4	
7	0641630	12	Bolt 3/8 x 3-3/4	
8	0791605	8	Screw 3/8 x 5/8	
9	0903154	1	Bracket, Engine Side Striker	
10	1001250301	1	Bracket, Tank Side Striker	
11	1671109	1	Cover, Turntable	
12	1671118	2	Cover, Pin Access	
13	1671194	1	Hood, Tank Side (See Items 201-221 for Breakdown)	
14	2080051	16	Clamp	
15	2600280	4	Hinge	
16	2940173	2	Latch, Rotary	
17	3311405	2	Nut 1/4	
18	3311601	10	Nut 3/8	
19	3311605	15	Nut 3/8	
20	3520186	6	Plug	
21	3574533	1	Trough, Powertrack	
22	3900232	6	Screw 3/8 x 1-1/4	
23	3900283	29	Screw 3/8 x 3/4	
24	3900316	10	Screw 3/8 x 1	
25	4071048	3	Shim	
26	4160194	4	Spring, Gas	
27	4340995	1	Support, Tank Side Hood	
28	4340996	1	Support, Engine Side Hood	
29	4341000	1	Mount, Tank Side Gas Spring	
30	4341001	1	Weldment, Gas Spring Mount	
31	4711400	12	Washer 1/4	
32	4711600	64	Washer 1/4	
33	4740500	6	Washer, Nylon	
34	4751600	53	Washer 3/8	
35	4846871	1	Weldment, Rear Hood Support	
36	4846872	1	Weldment, Front Hood Support	
37	88662523	2	Nut, Tinnerman	
38	1001140485	1	Seal, Foam Gasket	
39	1001142144	1	Bracket, Hood Baffle	
40	1001146132	1	Seal, Foam Gasket	
41	1001146142	1	Seal, Foam Gasket	
42	1001146178	1	Seal, Hood Frame	
43	1001146183	1	Plate, Hood Frame Baffle	
44	1001236408	1	Weldment, Exhaust Stack	
45	1001237125	1	Hood, Engine Side (See Items 101-121 for Breakdown)	
46	4891600	4	Washer 3/8	
47	1001243414	1	U - Bolt	
48	1001160505	2	Strap	
	1001237125	Ref	ENGINE SIDE HOOD ASSEMBLY	A

ITEM	PART NUMBER	QTY	DESCRIPTION	REV
101	0100011	AR	Compound, Locking	
102	0100081	AR	Adhesive	
103	0641510	10	Bolt 5/16 x 1-1/4	
104	0760608	1	Bolt M6 x 16	
105	0902746	7	Bracket	
106	0902761	1	Bracket	
107	0903161	1	Bracket	
108	2560187	1	Handle	
109	2680496	1	Hood, Engine Side Rear	
110	3290601	1	Nut M6 x 1	
111	3311501	10	Nut 5/16	
112	3340877	9	Pad	
113	3575782	1	Plate	
114	3900363	2	Screw M6 x 25	
115	3960464	12.1 ft /3.7m	Seal	
116	4060804	5.1 ft /1.6m	Shield, Flex Trim	
117	4060806	4.1 ft /1.2m	Shield, Flex Trim	
118	4751500	20	Washer 5/16	
119	4811900	2	Washer M8	
120	1001117140	AR	Tape, Aluminized Polyester	
121	1001152566	AR	Insulate	
	1671194	Ref	TANK SIDE HOOD ASSEMBLY	A
201	0100011	AR	Compound, Locking	
202	0100081	AR	Adhesive	
203	0641506	9	Bolt 5/16 x 3/4	
204	0760608	1	Bolt M6 x 16	
205	0902746	4	Bracket	
206	0902762	1	Bracket	
207	0902763	1	Bracket	
208	0903162	1	Bracket	
209	1671193	1	Hood, Tank Side Front	
210	2560187	1	Handle	
211	2680498	1	Hood, Tank Side Rear	
212	3290601	1	Nut M6 x 1	
213	3311501	9	Nut 5/16	
214	3340877	7	Pad	
215	3900363	2	Screw M6 x 25	
216	3960464	12.4 ft /3.8m	Seal	
217	4060804	4.4 ft /1.3m	Shield, Flex Trim	
218	4060806	3.3 ft /1m	Shield, Flex Trim	
219	4240150	1	Strap	
220	4751500	18	Washer 5/16	
221	4811900	2	Washer M8	

SECTION 3 - ENGINE

FIGURE 3-1. DEUTZ TD2011 ENGINE INSTALLATION - WITH REXROTH PUMP (WITHOUT GENERATOR AND WITHOUT COLD WEATHER PLUS PACKAGE)

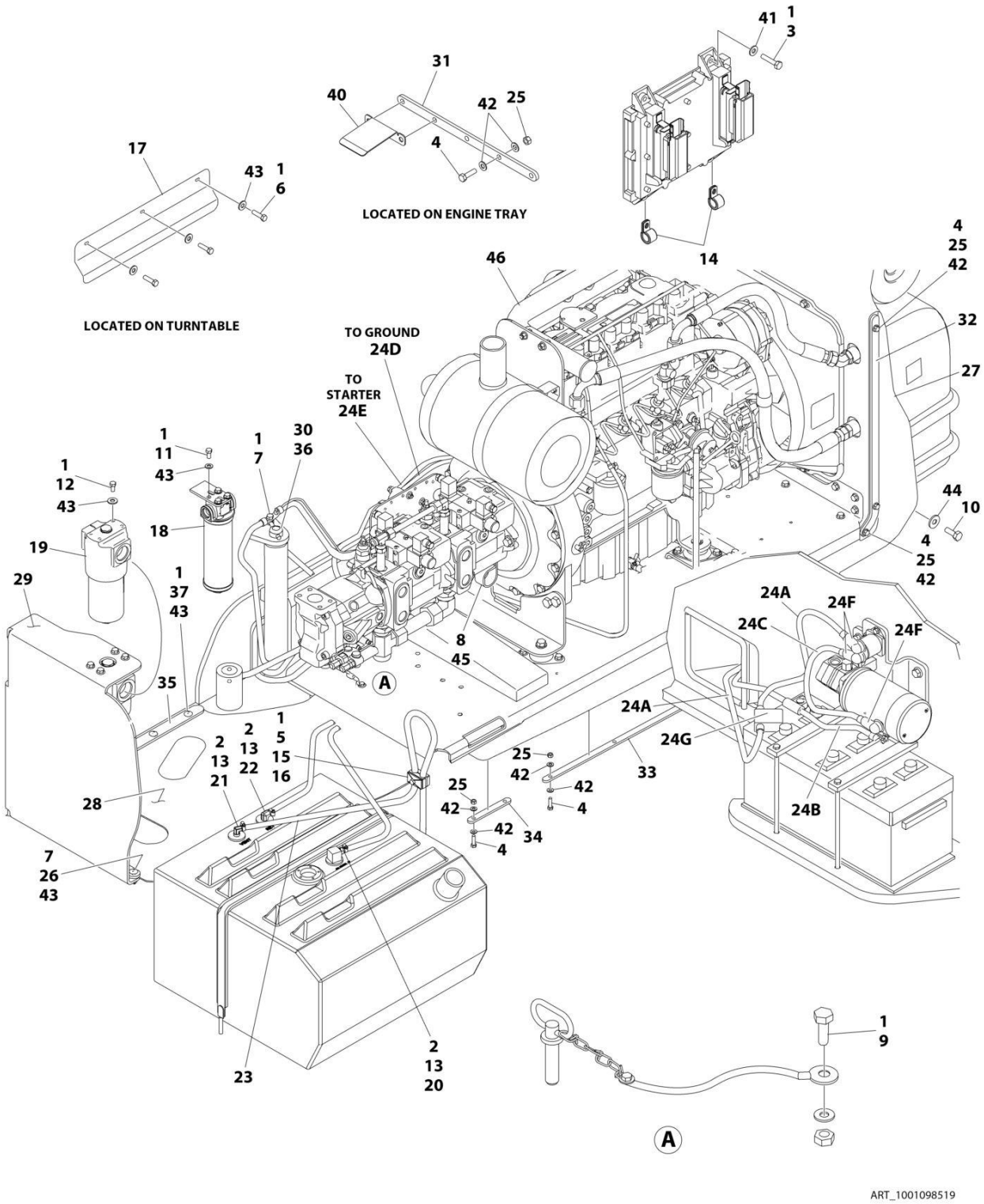

FIGURE 3-1. DEUTZ TD2011 ENGINE INSTALLATION - WITH REXROTH PUMP (WITHOUT GENERATOR AND WITHOUT COLD WEATHER PLUS PACKAGE)

ITEM	PART NUMBER	QTY	DESCRIPTION	REV
	1001098519	Ref	DEUTZ TD2011 ENGINE INSTALLATION - WITH REXROTH PUMP (WITHOUT GENERATOR AND WITHOUT COLD WEATHER PLUS PACKAGE)	G
1	0100011	AR	Compound, Locking	
2	0100079	AR	Sealant, Pipe	
3	0641410	4	Bolt 1/4 x 1-1/4	
4	0641509	15	Bolt 5/16 x 1-1/8	
5	0641511	1	Bolt 5/16 x 1-3/8	
6	0641605	3	Bolt 3/8 x 5/8	
7	0641610	5	Bolt 3/8 x 1-1/4	
8	0641806	1	Bolt 1/2 x 3/4	
9	0641808	1	Bolt 1/2 x 1	
10	0642010	1	Bolt 5/8 x 1-1/4	
11	0641606	4	Bolt 3/8 x 3/4	
12	0651606	4	Bolt 3/8 x 3/4	
13	1320022	3	Clamp	
14	1320041	2	Clamp	
15	1320187	1	Clamp	
16	1320190	1	Clamp	
17	1671121	1	Cover, Generator	
18	1001108617	1	Filter, Pressure	
18	70002231	1	Element, Filter	
19	2120218	1	Filter, High Pressure	
19	2120219	1	Element	
19	70001344	1	O-Ring, Bowl	
19	70006137	1	Seal Kit - Includes O-Ring (Element), O-Ring (Bowl), Back-up Ring (Bowl), Seal Ring (Indicator) and O-Ring (Indicator)	
20	2180348	1	Fitting, Barbed	
21	2220313	1	Fitting, 90 Barbed	
22	2221176	1	Fitting, 90 Elbow	
23	2750532	5 ft/ 1.5m	Hose	
24	2902292	1	Battery Cable Kit	
24A	7027008	1	Cable, Red (To Aux Pump Relay, Battery Positive Terminal and Start Relay)	
24B	7027009	1	Cable, Black (To Aux Pump, Battery Negative Terminal and Ground at Tray Pivot)	
24C	7027010	1	Cable, Red (Aux Pump Relay to Aux Pump)	
24D	7027011	1	Cable, Black (Tray Pivot to Engine Mount)	
24E	7024584	1	Cable, Red (Start Relay to Starter)	
24F	See Note	NSS	Boot, Terminal (Red) (Note: Not Available for Purchase)	
24G	See Note	NSS	Boot, Square Terminal (Red) (Note: Not Available for Purchase)	
25	3311505	15	Nut 5/16	
26	3311605	4	Nut 3/8	
27	3380473	1	Panel, Rubber	
28	3380498	1	Panel	
29	3380723	1	Panel	
30	3422446	1	Pin	
31	3573644	1	Plate, Tray Clamp	
32	3573669	1	Plate, Clamp	
33	3573727	1	Plate, Tray Clamp	

ITEM	PART NUMBER	QTY	DESCRIPTION	REV
34	3573728	1	Plate, Tray Clamp	
35	3574633	1	Plate	
36	3841143	1	Keeper	
37	3900316	10	Screw 3/8 x 1	
38	4240018	2	Strap, Cable Tie (Not Shown)	
39	4240033	AR	Tie, Wire (Not Shown)	
40	4341110	1	Support	
41	4711400	4	Washer 1/4	
42	4711500	30	Washer 5/16	
43	4711600	29	Washer 3/8	
44	4752000	1	Washer 5/8	
45	90028660	1	Clamp	
46	1001098513	1	Engine and Pump Assembly (See Separate Breakdown in this Section)	

FIGURE 3-2. DEUTZ TD2011 ENGINE ASSEMBLY - WITH REXROTH PUMP (WITHOUT GENERATOR AND WITHOUT COLD WEATHER PLUS PACKAGE)

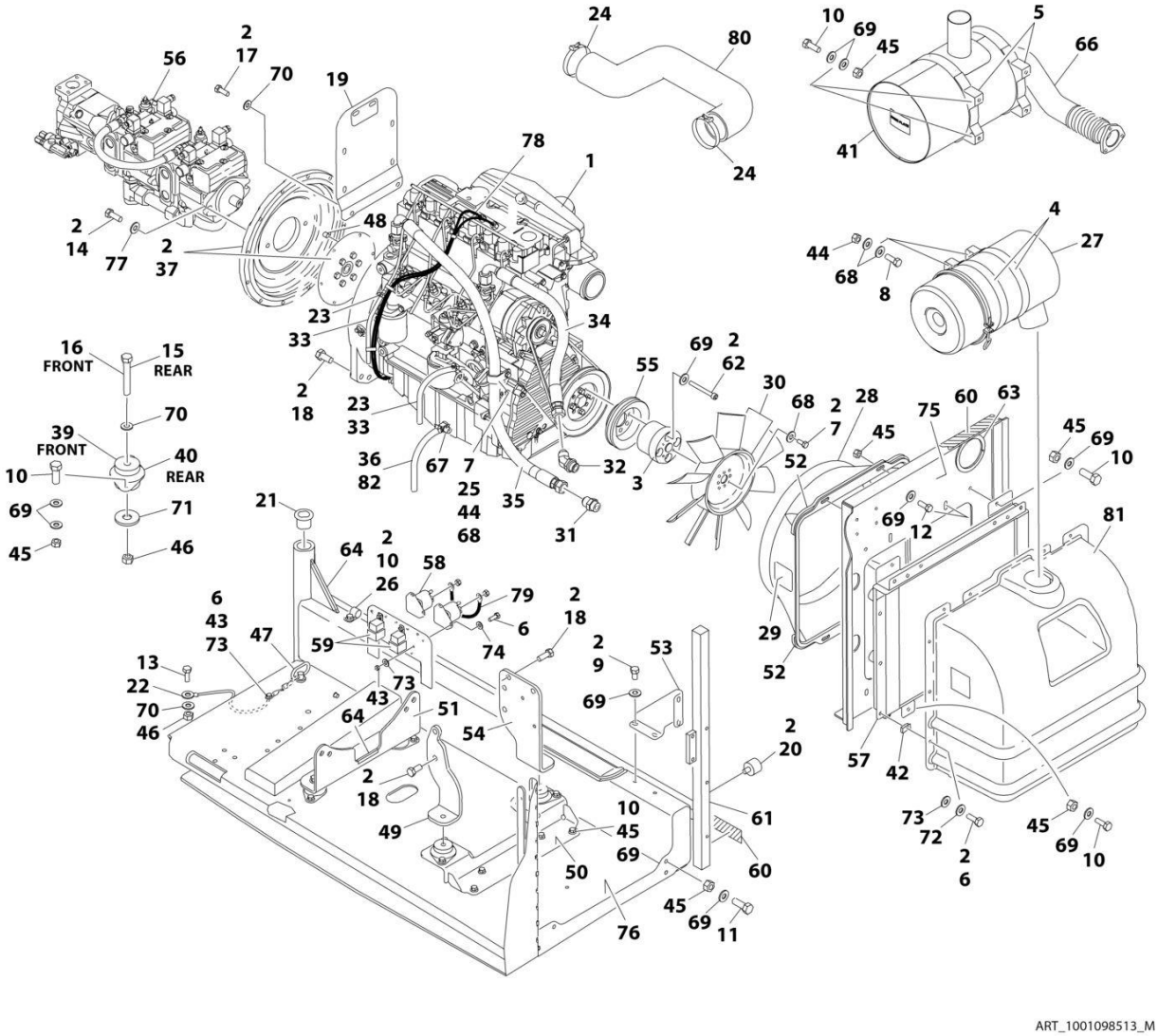

FIGURE 3-2. DEUTZ TD2011 ENGINE ASSEMBLY - WITH REXROTH PUMP (WITHOUT GENERATOR AND WITHOUT COLD WEATHER PLUS PACKAGE)

ITEM	PART NUMBER	QTY	DESCRIPTION	REV
	1001098513	Ref	DEUTZ TD2011 ENGINE ASSEMBLY - WITH REXROTH PUMPS	M
1	1001098601	1	Engine, Deutz TD2011 Components (See Separate Breakdown in this Section)	
2	0100011	AR	Compound, Locking	
3	0080237	1	Spacer, Fan	
4	0340003	2	Band, Air Cleaner	
5	0340051	2	Band, Muffler	
6	0641406	15	Bolt 1/4 x 3/4	
7	0641506	5	Bolt 5/16 x 3/4	
8	0641507	4	Bolt 5/16 x 7/8	
9	0641605	4	Bolt 3/8 x 5/8	
10	0641608	25	Bolt 3/8 x 1	
11	0641609	2	Bolt 3/8 x 1-1/8	
12	0641610	4	Bolt 3/8 x 1-1/4	
13	0641808	1	Bolt 1/2 x 1	
14	0641812	2	Bolt 1/2 x 1-1/2	
15	0641818	2	Bolt 1/2 x 2-1/4	
16	0641826	2	Bolt 1/2 x 3-1/4	
17	0711214	2	Bolt M12 x 30	
18	0771414	10	Bolt M14 x 30	
19	1001112766	1	Bracket, Muffler	
20	0940070	1	Bumper	
21	0961986	2	Bushing, Flanged	
22	1001131542	1	Lanyard	
23	1320022	3	Clamp	
24	1320058	2	Clamp	
25	1320060	1	Clamp	
26	1320223	1	J-Clip	
27	1340065	1	Air Cleaner Assembly	
27	7003655	1	Element, Air Cleaner	
27	7015013	1	Baffle, Rubber	
27	7015014	1	Clamp, Cap	
27	7015015	1	Cup	
27	7015003	1	Wingnut	
28	1671023	1	Shroud, Fan	
29	1703162	2	Decal - Fan Blade	
30	2060025	1	Fan	
31	2220451	1	Fitting, Straight	
32	2220498	1	Fitting, Elbow	
33	2720058	34 ft/ 10.3m	Hose	
34	2720500	1	Hose, Oil Cooler (Top)	
35	2720501	1	Hose, Oil Cooler (Bottom)	
36	2750532	0.75 ft /0.2m	Hose	
37	2902065	1	Pump Coupling Kit (See Separate Breakdown in this Section)	
39	3200362	2	Mount, Motor (Front)	
40	3200401	2	Mount, Motor (Rear)	
41	1001257277	1	Muffler, Spark Arresting	

SECTION 3 - ENGINE

ITEM	PART NUMBER	QTY	DESCRIPTION	REV
42	3300454	10	Nut 1/4	
43	3311405	5	Nut 1/4	
44	3311505	5	Nut 5/16	
45	3311605	30	Nut 3/8	
46	3311805	5	Nut 1/2	
47	3422532	1	Pin, Hitch	
48	3520054	2	Plug	
49	3537416	1	Plate, Mounting (Front Right)	
50	3539971	1	Bracket, Engine Mounting (Front)	
51	3573142	1	Bracket, Engine Mounting (Rear)	
52	3573411	2	Plate, Clamp	
53	3573412	1	Gusset	
54	3573529	1	Plate, Mounting (Front Left)	
55	3580158	1	Pulley	
56	3600339	1	Pump Assembly - Rexroth (See Separate Breakdown in this Section)	
57	1001145382	1	Cooler, Engine Oil	
58	3740067	2	Relay, Start	
59	3740080	2	Relay	
60	3960543	1	Seal	
61	3960544	1	Seal	
62	4032022	4	Capscrew M10 x 90	
63	4060804	0.98 ft /0.3m	Flex-Trim	
64	4060805	0.67 ft /0.2m	Flex-Trim	
65	4240099	AR	Tie, Wire (Not Shown)	
66	4568293	1	Pipe, Exhaust	
67	4640751	1	Valve, Oil Drain	
68	4711500	13	Washer 5/16	
69	4711600	68	Washer 3/8	
70	4711800	7	Washer 1/2	
71	4740274	4	Washer, Snubbing	
72	4740518	10	Washer, Nylon	
73	4751400	20	Washer 1/4	
74	4791400	4	Washer 1/4	
75	4846552	1	Plate, Oil Cooler Mounting	
76	4846946	1	Tray	
77	4891800	2	Washer 1/2 Hardened	
78	4923468	1	Harness, Glow Plugs	
79	4923592	1	Cable, Jumper	
80	1001225118	1	Hose, Air Intake	
81	0272060	1	Box, Air Intake	
82	8410013	1	Clamp, Gear	

FIGURE 3-3. DEUTZ TD2011 ENGINE INSTALLATION - WITH REXROTH PUMP (WITH GENERATOR AND WITHOUT COLD WEATHER PLUS PACKAGE)

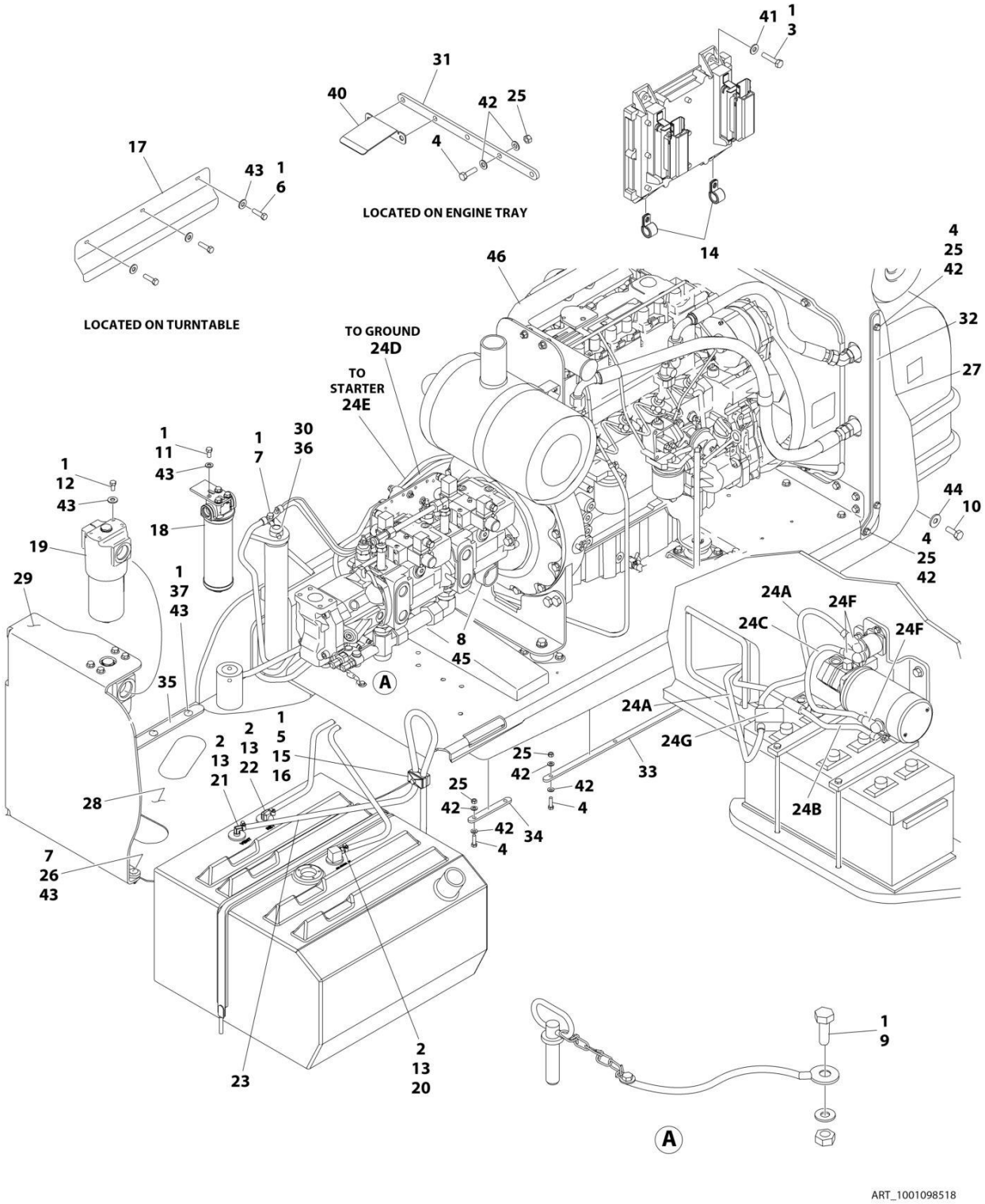

FIGURE 3-3. DEUTZ TD2011 ENGINE INSTALLATION - WITH REXROTH PUMP (WITH GENERATOR AND WITHOUT COLD WEATHER PLUS PACKAGE)

ITEM	PART NUMBER	QTY	DESCRIPTION	REV
	1001098518	Ref	DEUTZ TD2011 ENGINE INSTALLATION - WITH REXROTH PUMP (WITH GENERATOR AND WITHOUT COLD WEATHER PLUS PACKAGE)	G
1	0100011	AR	Compound, Locking	
2	0100079	AR	Sealant, Pipe	
3	0641410	4	Bolt 1/4 x 1-1/4	
4	0641509	15	Bolt 5/16 x 1-1/8	
5	0641511	1	Bolt 5/16 x 1-3/8	
6	0641605	3	Bolt 3/8 x 5/8	
7	0641610	5	Bolt 3/8 x 1-1/4	
8	0641806	1	Bolt 1/2 x 3/4	
9	0641808	1	Bolt 1/2 x 1	
10	0642010	1	Bolt 5/8 x 1-1/4	
11	0641606	4	Bolt 3/8 x 3/4	
12	0651606	4	Bolt 3/8 x 3/4	
13	1320022	3	Clamp	
14	1320041	2	Clamp	
15	1320187	1	Clamp, Twin	
16	1320190	1	Cover, Clamp	
17	1671121	1	Cover, Generator	
18	1001108617	1	Filter, Pressure	
18	70002231	1	Element, Filter	
19	2120218	1	Filter, High Pressure	
19	2120219	1	Element	
19	70001344	1	O-Ring, Bowl	
19	70006137	1	Seal Kit - Includes O-Ring (Element), O-Ring (Bowl), Back-up Ring (Bowl), Seal Ring (Indicator) and O-Ring (Indicator)	
20	2180348	1	Fitting, Barbed	
21	2220313	1	Fitting, 90 Barbed	
22	2221176	1	Fitting, 90 Elbow	
23	2750532	5 ft/ 1.5m	Hose	
24	2902292	1	Battery Cable Kit	
24A	7027008	1	Cable, Red (To Aux Pump Relay, Battery Positive Terminal and Start Relay)	
24B	7027009	1	Cable, Black (To Aux Pump, Battery Negative Terminal and Ground at Tray Pivot)	
24C	7027010	1	Cable, Red (Aux Pump Relay to Aux Pump)	
24D	7027011	1	Cable, Black (Tray Pivot to Engine Mount)	
24E	7024584	1	Cable, Red (Start Relay to Starter)	
24F	See Note	NSS	Boot, Terminal (Red) (Note: Not Available for Purchase)	
24G	See Note	NSS	Boot, Square Terminal (Red) (Note: Not Available for Purchase)	
25	3311505	15	Nut 5/16	
26	3311605	4	Nut 3/8	
27	3380473	1	Panel, Rubber	
28	3380498	1	Panel	
29	3380723	1	Panel	
30	3422446	1	Pin	
31	3573644	1	Plate, Tray Clamp	
32	3573669	1	Plate, Clamp	
33	3573727	1	Plate, Tray Clamp	

SECTION 3 - ENGINE

ITEM	PART NUMBER	QTY	DESCRIPTION	REV
34	3573728	1	Plate, Tray Clamp	
35	3574633	1	Plate	
36	3841143	1	Keeper	
37	3900316	10	Screw 3/8 x 1	
38	4240018	2	Strap, Cable Tie (Not Shown)	
39	4240033	AR	Tie, Wire (Not Shown)	
40	4341110	1	Support	
41	4711400	4	Washer 1/4	
42	4711500	30	Washer 5/16	
43	4711600	29	Washer 3/8	
44	4752000	1	Washer 5/8	
45	90028660	1	Clamp	
46	1001098530	1	Engine and Pump Assembly (See Separate Breakdown in this Section)	

FIGURE 3-4. DEUTZ TD2011 ENGINE ASSEMBLY - WITH REXROTH PUMP (WITH GENERATOR AND WITHOUT COLD WEATHER PLUS PACKAGE)

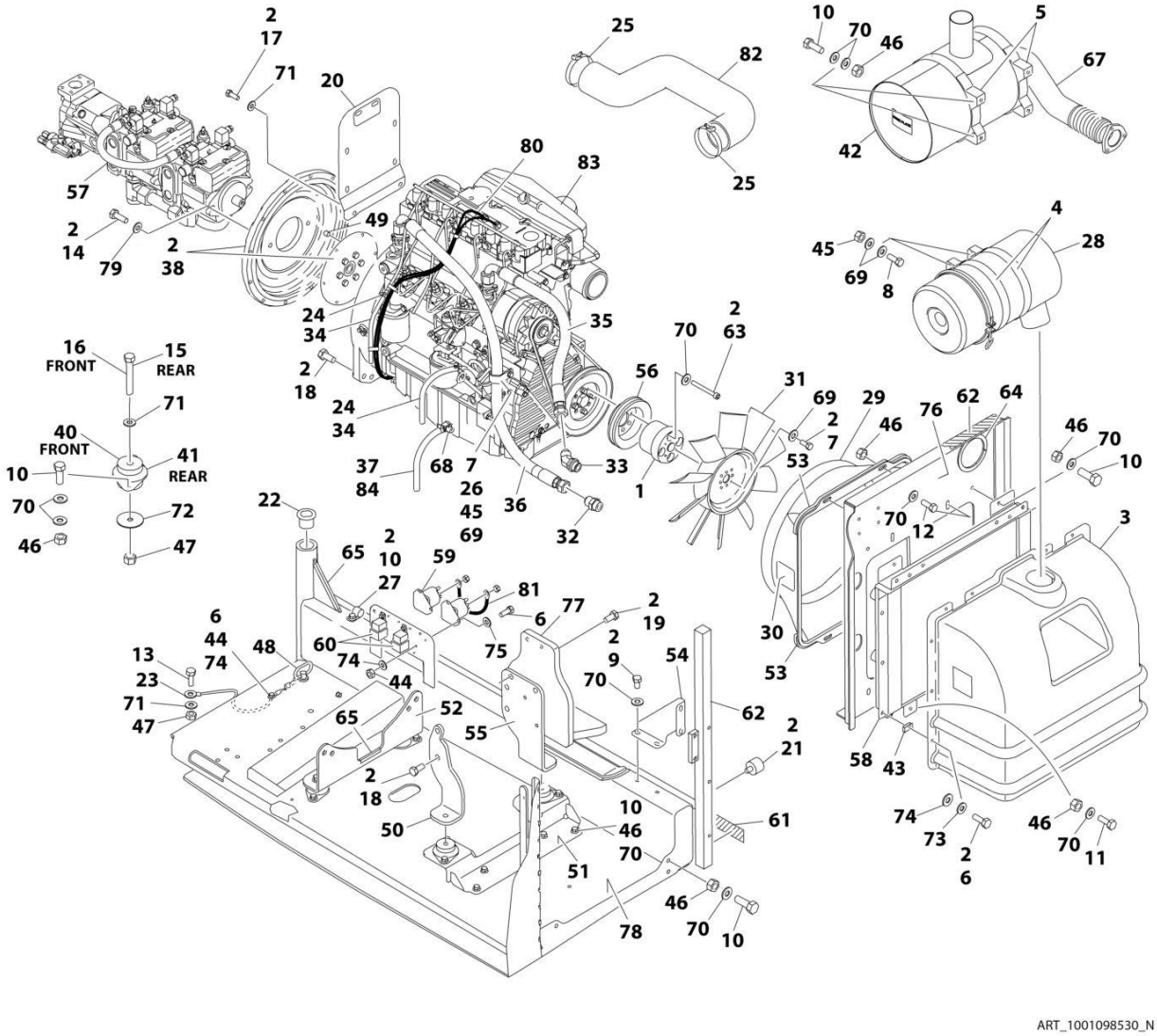

FIGURE 3-4. DEUTZ TD2011 ENGINE ASSEMBLY - WITH REXROTH PUMP (WITH GENERATOR AND WITHOUT COLD WEATHER PLUS PACKAGE)

ITEM	PART NUMBER	QTY	DESCRIPTION	REV
	1001098530	Ref	DEUTZ TD2011 ENGINE ASSEMBLY - WITH REXROTH PUMPS (WITH SKYPOWER AND WITHOUT COLD WEATHER PLUS PACKAGE)	N
1	0080244	1	Spacer, Fan	
2	0100011	AR	Compound, Locking	
3	0272060	1	Box, Air Intake	
4	0340003	2	Band, Air Cleaner	
5	0340051	2	Band, Muffler	
6	0641406	15	Bolt 1/4 x 3/4	
7	0641506	5	Bolt 5/16 x 3/4	
8	0641507	4	Bolt 5/16 x 7/8	
9	0641605	4	Bolt 3/8 x 5/8	
10	0641608	25	Bolt 3/8 x 1	
11	0641609	2	Bolt 3/8 x 1-1/8	
12	0641610	4	Bolt 3/8 x 1-1/4	
13	0641808	1	Bolt 1/2 x 1	
14	0641812	2	Bolt 1/2 x 1-1/2	
15	0641818	2	Bolt 1/2 x 2-1/4	
16	0641826	2	Bolt 1/2 x 3-1/4	
17	0711214	2	Bolt M12 x 30	
18	0771414	6	Bolt M14 x 30	
19	0711417	4	Bolt M14 x 45	
20	1001112766	1	Bracket, Muffler	
21	0940070	1	Bumper	
22	0961986	2	Bushing, Flanged	
23	1001131542	1	Lanyard	
24	1320022	2	Clamp	
25	1320058	2	Clamp	
26	1320060	1	Clamp	
27	1320223	1	J-Clip	
28	1340065	1	Air Cleaner Assembly	
28	7003655	1	Element, Air Cleaner	
28	7015013	1	Baffle, Rubber	
28	7015014	1	Clamp, Cap	
28	7015015	1	Cup	
28	7015003	1	Wingnut	
29	1671023	1	Shroud, Fan	
30	1703162	2	Decal - Fan Blade	
31	2060025	1	Fan	
32	2220451	1	Fitting, Straight	
33	2220498	1	Fitting, Elbow	
34	2720058	34 ft/ 10.3m	Hose	
35	2720500	1	Hose, Oil Cooler (Top)	
36	2720501	1	Hose, Oil Cooler (Bottom)	
37	2750532	0.75 ft /0.2m	Hose	
38	2902065	1	Pump Coupling Kit (See Separate Breakdown in this Section)	
40	3200362	2	Mount, Motor (Front)	
41	3200401	2	Mount, Motor (Rear)	

SECTION 3 - ENGINE

ITEM	PART NUMBER	QTY	DESCRIPTION	REV
42	1001257277	1	Muffler	
43	3300454	10	Nut	
44	3311405	5	Nut 1/4	
45	3311505	5	Nut 5/16	
46	3311605	30	Nut 3/8	
47	3311805	5	Nut 1/2	
48	3422532	1	Pin, Hitch	
49	3520054	2	Plug	
50	3537416	1	Plate, Mounting (Front Right)	
51	3539971	1	Bracket, Engine Mounting (Front)	
52	3573142	1	Bracket, Engine Mounting (Rear)	
53	3573411	2	Plate, Clamp	
54	3573412	1	Gusset	
55	3573529	1	Plate, Mounting (Front Left)	
56	3580320	1	Pulley	
57	3600339	1	Pump Assembly - Rexroth (See Separate Breakdown in this Section)	
58	1001145382	1	Cooler, Engine Oil	
59	3740067	2	Relay, Start	
60	3740080	2	Relay	
61	3960543	1	Seal	
62	3960544	1	Seal	
63	4032022	4	Capscrew M10 x 90	
64	4060804	0.98 ft /0.3m	Flex-Trim	
65	4060805	0.67 ft /0.2m	Flex-Trim	
66	4240099	AR	Tie, Wire (Not Shown)	
67	4568293	1	Pipe, Exhaust	
68	4640751	1	Valve, Oil Drain	
69	4711500	13	Washer 5/16	
70	4711600	68	Washer 3/8	
71	4711800	7	Washer 1/2	
72	4740274	4	Washer, Snubbing	
73	4740518	10	Washer, Nylon	
74	4751400	20	Washer 1/4	
75	4791400	4	Washer 1/4	
76	4846552	1	Plate, Oil Cooler Mounting	
77	4846945	1	Mount, Generator	
78	4846946	1	Tray	
79	4891800	2	Washer 1/2	
80	4923468	1	Harness, Glow Plugs	
81	4923592	1	Cable, Jumper	
82	1001225118	1	Hose, Air Intake	
83	1001098601	1	Engine, Deutz TD2011 Components (See Separate Breakdown in this Section)	
84	8410013	1	Clamp, Gear	

FIGURE 3-5. DEUTZ TD2011 ENGINE INSTALLATION - WITH REXROTH PUMP (WITH GENERATOR AND WITH COLD WEATHER PLUS PACKAGE)

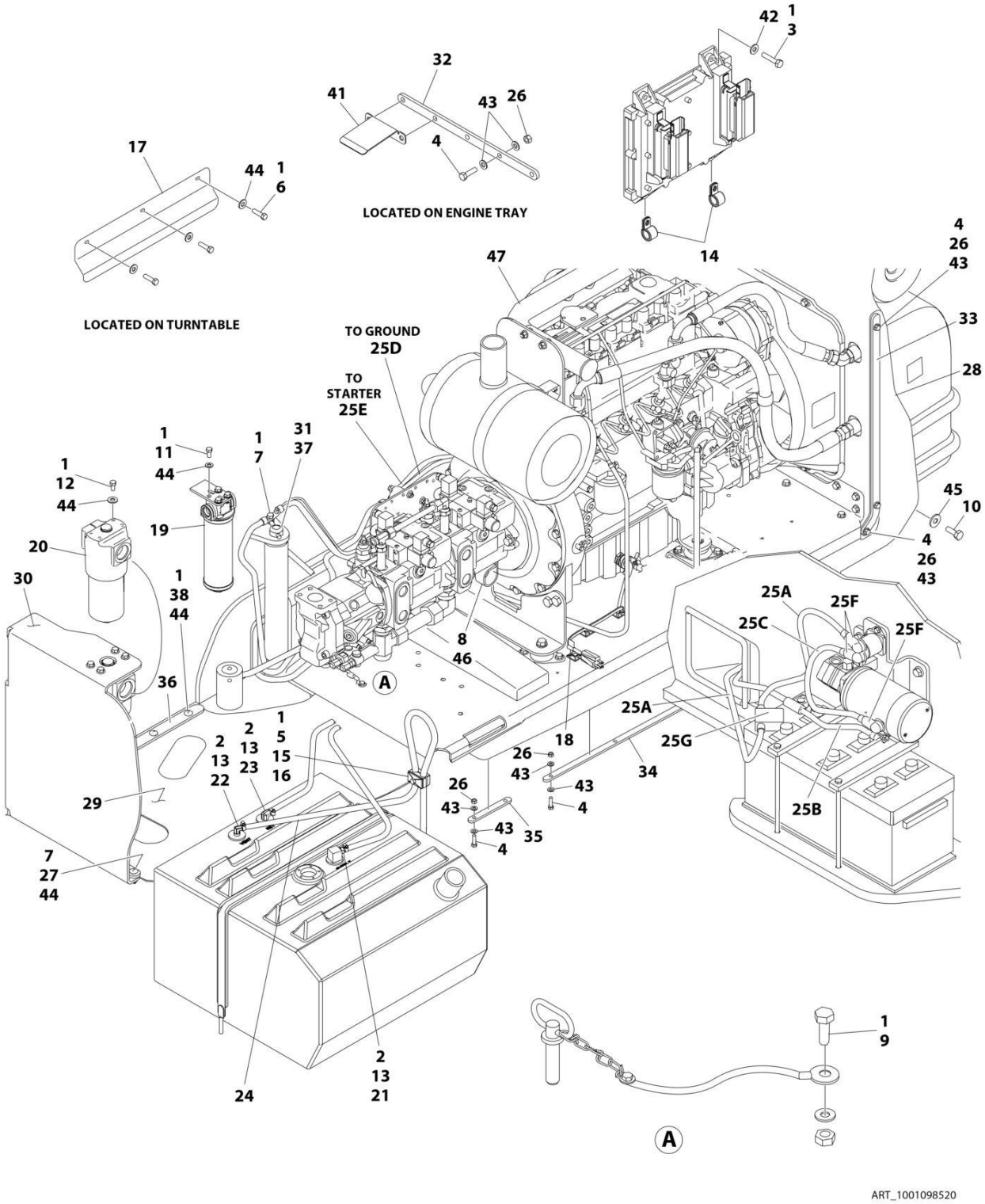

FIGURE 3-5. DEUTZ TD2011 ENGINE INSTALLATION - WITH REXROTH PUMP (WITH GENERATOR AND WITH COLD WEATHER PLUS PACKAGE)

ITEM	PART NUMBER	QTY	DESCRIPTION	REV
	1001098520	Ref	DEUTZ TD2011 ENGINE INSTALLATION - WITH REXROTH PUMP (WITH GENERATOR AND WITH COLD WEATHER PLUS PACKAGE)	G
1	0100011	AR	Compound, Locking	
2	0100079	AR	Sealant, Pipe	
3	0641410	4	Bolt 1/4 x 1-1/4	
4	0641509	15	Bolt 5/16 x 1-1/8	
5	0641511	1	Bolt 5/16 x 1-3/8	
6	0641605	3	Bolt 3/8 x 5/8	
7	0641610	5	Bolt 3/8 x 1-1/4	
8	0641806	1	Bolt 1/2 x 3/4	
9	0641808	1	Bolt 1/2 x 1	
10	0642010	1	Bolt 5/8 x 1-1/4	
11	0641606	4	Bolt 3/8 x 3/4	
12	0651606	4	Bolt 3/8 x 3/4	
13	1320022	3	Clamp	
14	1320041	2	Clamp	
15	1320187	1	Clamp, Twin	
16	1320190	1	Cover, Clamp	
17	1671121	1	Cover, Generator	
18	1702942	1	Decal - Engine Block Heater	
19	1001108617	1	Filter, Pressure	
19	70002231	1	Element, Filter	
20	2120218	1	Filter, High Pressure	
20	2120219	1	Element	
20	70001344	1	O-Ring, Bowl	
20	70006137	1	Seal Kit - Includes O-Ring (Element), O-Ring (Bowl), Back-up Ring (Bowl), Seal Ring (Indicator) and O-Ring (Indicator)	
21	2180348	1	Fitting, Barbed	
22	2220313	1	Fitting, 90 Barbed	
23	2221176	1	Fitting, 90 Elbow	
24	2750532	5 ft/ 1.5m	Hose	
25	2902292	1	Battery Cable Kit	
25A	7027008	1	Cable, Red (To Aux Pump Relay, Battery Positive Terminal and Start Relay)	
25B	7027009	1	Cable, Black (To Aux Pump, Battery Negative Terminal and Ground at Tray Pivot)	
25C	7027010	1	Cable, Red (Aux Pump Relay to Aux Pump)	
25D	7027011	1	Cable, Black (Tray Pivot to Engine Mount)	
25E	7024584	1	Cable, Red (Start Relay to Starter)	
25F	See Note	NSS	Boot, Terminal (Red) (Note: Not Available for Purchase)	
25G	See Note	NSS	Boot, Square Terminal (Red) (Note: Not Available for Purchase)	
26	3311505	15	Nut 5/16	
27	3311605	4	Nut 3/8	
28	3380473	1	Panel, Rubber	
29	3380498	1	Panel	
30	3380723	1	Panel	
31	3422446	1	Pin	
32	3573644	1	Plate, Tray Clamp	
33	3573669	1	Plate, Clamp	

SECTION 3 - ENGINE

ITEM	PART NUMBER	QTY	DESCRIPTION	REV
34	3573727	1	Plate, Tray Clamp	
35	3573728	1	Plate, Tray Clamp	
36	3574633	1	Plate	
37	3841143	1	Keeper	
38	3900316	10	Screw 3/8 x 1	
39	4240018	2	Strap, Cable Tie (Not Shown)	
40	4240033	AR	Tie, Wire (Not Shown)	
41	4341110	1	Support	
42	4711400	4	Washer 1/4	
43	4711500	30	Washer 5/16	
44	4711600	29	Washer 3/8	
45	4752000	1	Washer 5/8	
46	90028660	1	Clamp	
47	1001098531	1	Engine and Pump Assembly (See Separate Breakdown in this Section)	

FIGURE 3-6. DEUTZ TD2011 ENGINE ASSEMBLY - WITH REXROTH PUMP (WITH GENERATOR AND WITH COLD WEATHER PLUS PACKAGE)

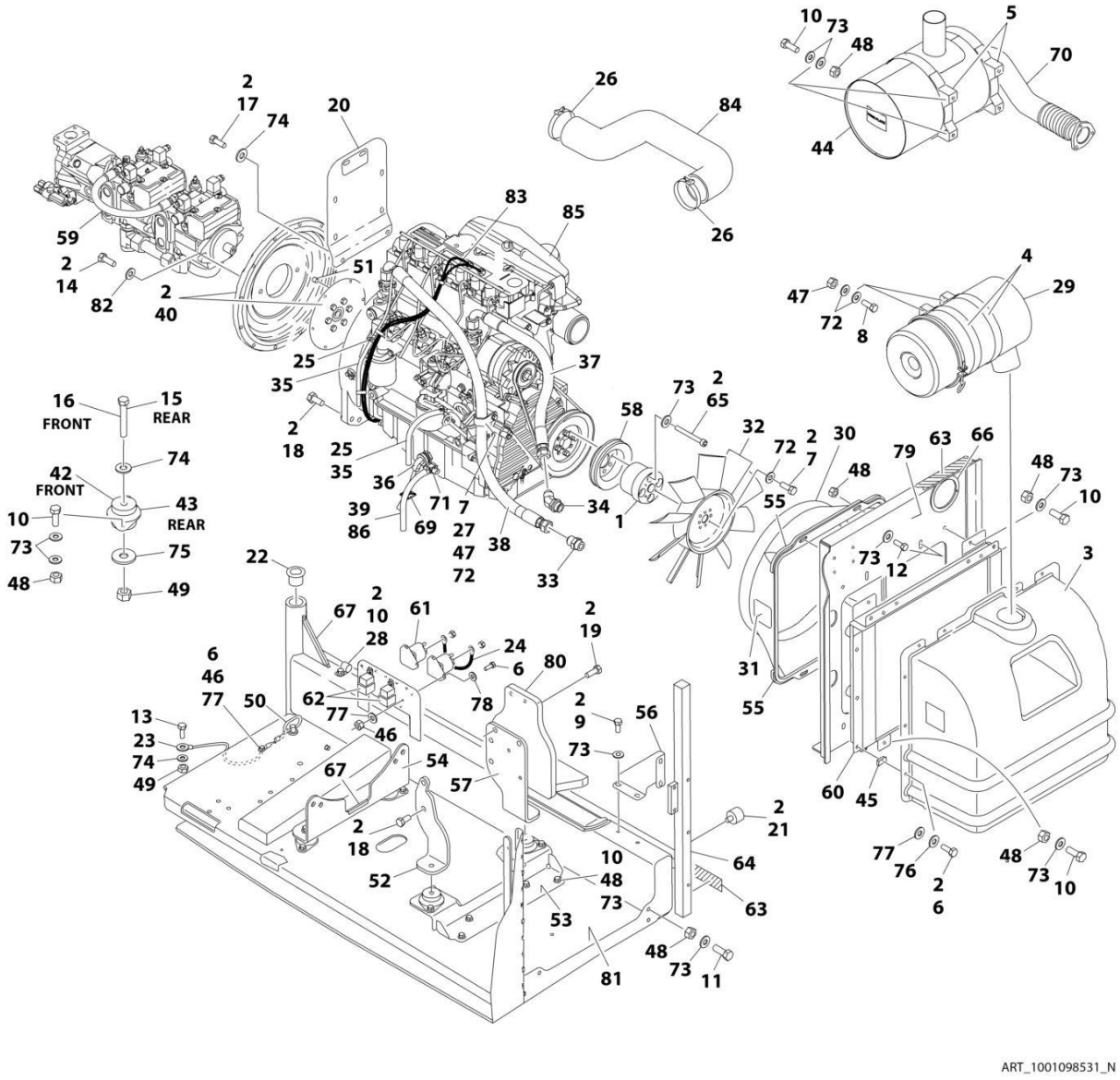

FIGURE 3-6. DEUTZ TD2011 ENGINE ASSEMBLY - WITH REXROTH PUMP (WITH GENERATOR AND WITH COLD WEATHER PLUS PACKAGE)

ITEM	PART NUMBER	QTY	DESCRIPTION	REV
	1001098531	Ref	DEUTZ TD2011 ENGINE ASSEMBLY - WITH REXROTH PUMPS (WITH SKYPOWER AND WITH COLD WEATHER PLUS PACKAGE)	N
1	0080244	1	Spacer, Fan	
2	0100011	AR	Compound, Locking	
3	0272060	1	Box, Air Intake	
4	0340003	2	Band, Air Cleaner	
5	0340051	2	Band, Muffler	
6	0641406	15	Bolt 1/4 x 3/4	
7	0641506	5	Bolt 5/16 x 3/4	
8	0641507	4	Bolt 5/16 x 7/8	
9	0641605	4	Bolt 3/8 x 5/8	
10	0641608	25	Bolt 3/8 x 1	
11	0641609	2	Bolt 3/8 x 1-1/8	
12	0641610	4	Bolt 3/8 x 1-1/4	
13	0641808	1	Bolt 1/2 x 1	
14	0641812	2	Bolt 1/2 x 1-1/2	
15	0641818	2	Bolt 1/2 x 2-1/4	
16	0641826	2	Bolt 1/2 x 3-1/4	
17	0711214	2	Bolt M12 x 30	
18	0771414	6	Bolt M14 x 30	
19	0711417	4	Bolt M14 x 45	
20	1001112766	1	Bracket, Muffler	
21	0940070	1	Bumper	
22	0961986	2	Bushing, Flanged	
23	1001131542	1	Lanyard	
24	1060904	1	Cable, Jumper	
25	1320022	2	Clamp	
26	1320058	2	Clamp	
27	1320060	1	Clamp	
28	1320223	1	J-Clip	
29	1340065	1	Air Cleaner Assembly	
29	7003655	1	Element, Air Cleaner	
29	7015013	1	Baffle, Rubber	
29	7015014	1	Clamp, Cap	
29	7015015	1	Cup	
29	7015003	1	Wingnut	
30	1671023	1	Shroud, Fan	
31	1703162	2	Decal - Fan Blade	
32	2060025	1	Fan	
33	2220451	1	Fitting, Straight	
34	2220498	1	Fitting, Elbow	
35	2720058	34 ft/ 10.3m	Hose	
36	2580062	1	Heater, Engine Block	
37	2720500	1	Hose, Oil Cooler (Top)	
38	2720501	1	Hose, Oil Cooler (Bottom)	
39	2750532	0.75 ft /0.2m	Hose	
40	2902065	1	Pump Coupling Kit (See Separate Breakdown in this Section)	

SECTION 3 - ENGINE

ITEM	PART NUMBER	QTY	DESCRIPTION	REV
42	3200362	2	Mount, Motor (Front)	
43	3200401	2	Mount, Motor (Rear)	
44	1001257277	1	Muffler	
45	3300454	10	Nut 1/4	
46	3311405	5	Nut 1/4	
47	3311505	5	Nut 5/16	
48	3311605	30	Nut 3/8	
49	3311805	5	Nut 1/2	
50	3422532	1	Pin, Hitch	
51	3520054	2	Plug	
52	3537416	1	Plate, Mounting (Front Right)	
53	3539971	1	Bracket, Engine Mounting (Front)	
54	3573142	1	Bracket, Engine Mounting (Rear)	
55	3573411	2	Plate, Clamp	
56	3573412	1	Gusset	
57	3573529	1	Plate, Mounting (Front Left)	
58	3580320	1	Pulley	
59	3600339	1	Pump Assembly - Rexroth (See Separate Breakdown in this Section)	
60	1001145382	1	Cooler, Engine Oil	
61	3740067	2	Relay, Start	
62	3740080	2	Relay	
63	3960543	1	Seal	
64	3960544	1	Seal	
65	4032022	4	Capscrew M10 x 90	
66	4060804	0.98 ft /0.3m	Flex-Trim	
67	4060805	0.67 ft /0.2m	Flex-Trim	
68	4240099	AR	Tie, Wire (Not Shown)	
69	4460234	3	Mount, Wire Tie	
70	4568293	1	Pipe, Exhaust	
71	4640751	1	Valve, Oil Drain	
72	4711500	13	Washer 5/16	
73	4711600	68	Washer 3/8	
74	4711800	7	Washer 1/2	
75	4740274	4	Washer, Snubbing	
76	4740518	10	Washer, Nylon	
77	4751400	20	Washer 1/4	
78	4791400	4	Washer 1/4	
79	4846552	1	Plate, Oil Cooler Mounting	
80	4846945	1	Mount, Generator	
81	4846946	1	Tray	
82	4891800	2	Washer 1/2 Hardened	
83	4923468	1	Harness, Glow Plugs	
84	1001225118	1	Hose, Air Intake	
85	1001098601	1	Engine, Deutz TD2011 Components (See Separate Breakdown in this Section)	
86	8410013	1	Clamp, Gear	

FIGURE 3-7. DEUTZ TD2011 ENGINE INSTALLATION - WITH SAUER PUMP (WITHOUT GENERATOR AND WITHOUT COLD WEATHER PLUS PACKAGE)

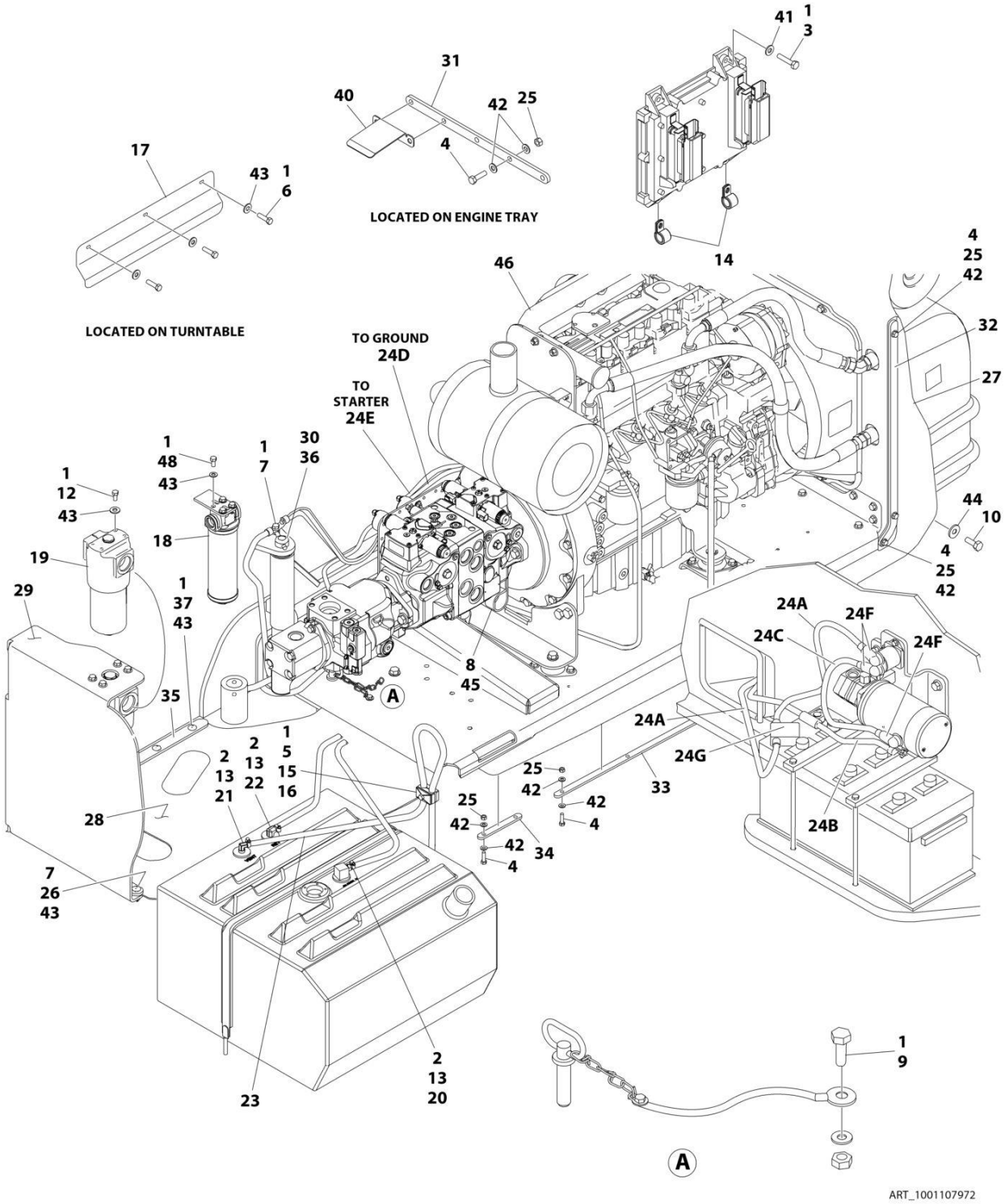

FIGURE 3-7. DEUTZ TD2011 ENGINE INSTALLATION - WITH SAUER PUMP (WITHOUT GENERATOR AND WITHOUT COLD WEATHER PLUS PACKAGE)

ITEM	PART NUMBER	QTY	DESCRIPTION	REV
	1001107972	Ref	DEUTZ TD2011 ENGINE INSTALLATION - WITH SAUER PUMP (WITHOUT GENERATOR AND WITHOUT COLD WEATHER PLUS PACKAGE)	E
1	0100011	AR	Compound, Locking	
2	0100079	AR	Sealant, Pipe	
3	0641410	4	Bolt 1/4 x 1-1/4	
4	0641509	15	Bolt 5/16 x 1-1/8	
5	0641511	1	Bolt 5/16 x 1-3/8	
6	0641605	3	Bolt 3/8 x 5/8	
7	0641610	5	Bolt 3/8 x 1-1/4	
8	0641806	1	Bolt 1/2 x 3/4	
9	0641808	1	Bolt 1/2 x 1	
10	0642010	1	Bolt 5/8 x 1-1/4	
12	0651606	4	Bolt 3/8 x 3/4	
13	1320022	3	Clamp	
14	1320041	2	Clamp	
15	1320187	1	Clamp, Twin	
16	1320190	1	Cover, Clamp	
17	1671121	1	Cover, Generator	
18	1001108617	1	Filter, Pressure	
18	70002231	1	Element, Filter	
19	2120218	1	Filter, High Pressure	
19	2120219	1	Element	
19	70001344	1	O-Ring, Bowl	
19	70006137	1	Seal Kit - Includes O-Ring (Element), O-Ring (Bowl), Back-up Ring (Bowl), Seal Ring (Indicator) and O-Ring (Indicator)	
20	2180348	1	Fitting, Barbed	
21	2220313	1	Fitting, 90 Barbed	
22	2221176	1	Fitting, 90 Elbow	
23	2750532	5 ft/ 1.5m	Hose	
24	2902292	1	Battery Cable Kit	
24A	7027008	1	Cable, Red (To Aux Pump Relay, Battery Positive Terminal and Start Relay)	
24B	7027009	1	Cable, Black (To Aux Pump, Battery Negative Terminal and Ground at Tray Pivot)	
24C	7027010	1	Cable, Red (Aux Pump Relay to Aux Pump)	
24D	7027011	1	Cable, Black (Tray Pivot to Engine Mount)	
24E	7024584	1	Cable, Red (Start Relay to Starter)	
24F	See Note	NSS	Boot, Terminal (Red) (Note: Not Available for Purchase)	
24G	See Note	NSS	Boot, Square Terminal (Red) (Note: Not Available for Purchase)	
25	3311505	15	Nut 5/16	
26	3311605	4	Nut 3/8	
27	3380473	1	Panel, Rubber	
28	3380498	1	Panel	
29	3380723	1	Panel	
30	3422446	1	Pin	
31	3573644	1	Plate, Tray Clamp	
32	3573669	1	Plate, Clamp	
33	3573727	1	Plate, Tray Clamp	
34	3573728	1	Plate, Tray Clamp	

ITEM	PART NUMBER	QTY	DESCRIPTION	REV
35	3574633	1	Plate	
36	3841143	1	Keeper	
37	3900316	10	Screw 3/8 x 1	
38	4240018	2	Strap, Cable Tie (Not Shown)	
39	4240033	AR	Tie, Wire (Not Shown)	
40	4341110	1	Support	
41	4711400	4	Washer 1/4	
42	4711500	30	Washer 5/16	
43	4711600	29	Washer 3/8	
44	4752000	1	Washer 5/8	
45	90028660	1	Clamp	
46	1001107971	1	Engine and Pump Assembly (See Separate Breakdown in this Section)	
48	0641606	4	Bolt 3/8 x 3/4	

FIGURE 3-8. DEUTZ TD2011 ENGINE ASSEMBLY - WITH SAUER PUMP (WITHOUT GENERATOR AND WITHOUT COLD WEATHER PLUS PACKAGE)

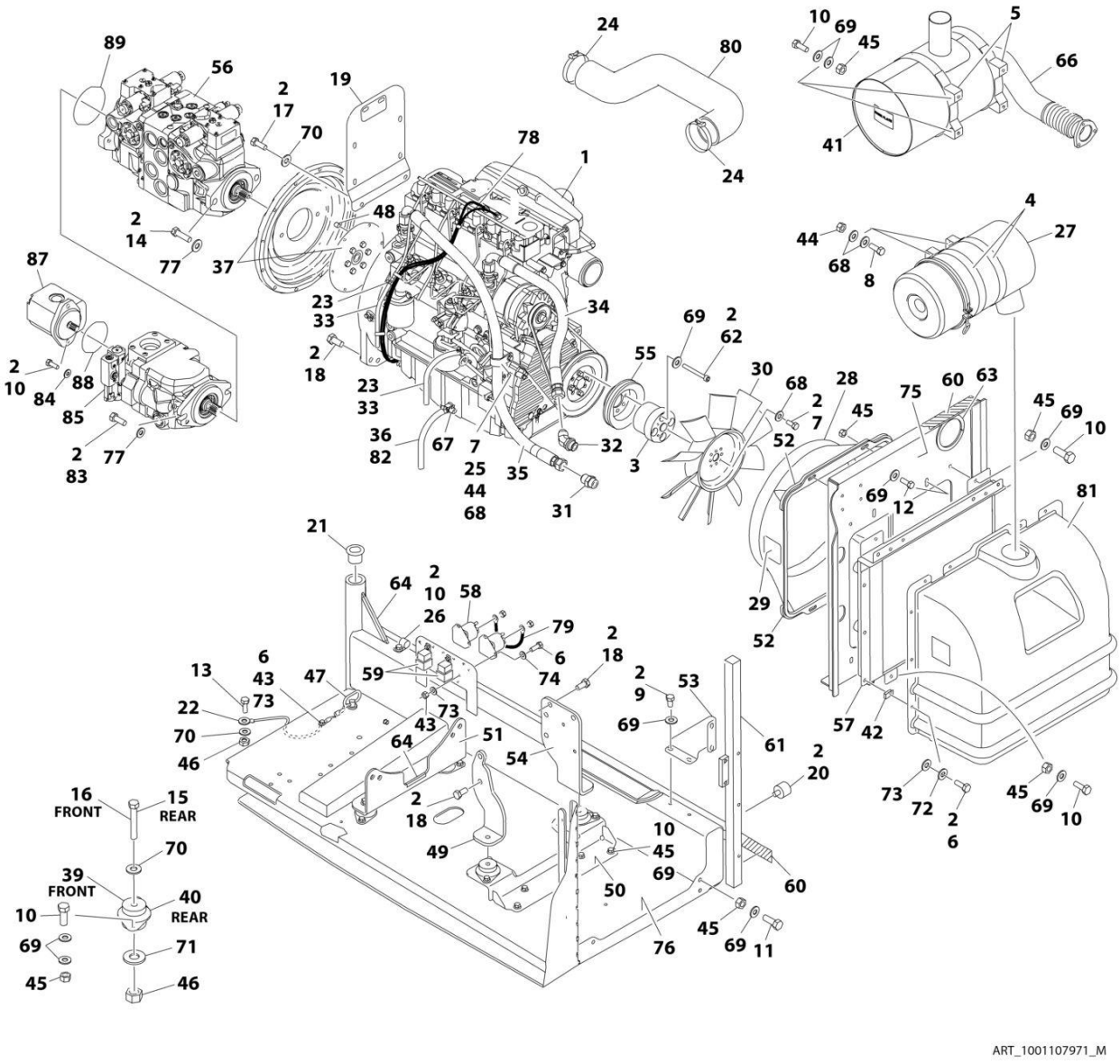

FIGURE 3-8. DEUTZ TD2011 ENGINE ASSEMBLY - WITH SAUER PUMP (WITHOUT GENERATOR AND WITHOUT COLD WEATHER PLUS PACKAGE)

ITEM	PART NUMBER	QTY	DESCRIPTION	REV
	1001107971	Ref	DEUTZ TD2011 ENGINE ASSEMBLY - WITH SAUER PUMPS (WITHOUT SKYPOWER AND WITHOUT COLD WEATHER PLUS PACKAGE)	M
1	1001098601	1	Engine, Deutz TD2011 Components (See Separate Breakdown in this Section)	
2	0100011	AR	Compound, Locking	
3	0080237	1	Spacer, Fan	
4	0340003	2	Band, Air Cleaner	
5	0340051	2	Band, Muffler	
6	0641406	15	Bolt 1/4 x 3/4	
7	0641506	5	Bolt 5/16 x 3/4	
8	0641507	4	Bolt 5/16 x 7/8	
9	0641605	4	Bolt 3/8 x 5/8	
10	0641608	27	Bolt 3/8 x 1	
11	0641609	2	Bolt 3/8 x 1-1/8	
12	0641610	4	Bolt 3/8 x 1-1/4	
13	0641808	1	Bolt 1/2 x 1	
14	0641814	2	Bolt 1/2 x 1-3/4	
15	0641818	2	Bolt 1/2 x 2-1/4	
16	0641826	2	Bolt 1/2 x 3-1/4	
17	0711214	2	Bolt M12 x 30	
18	0771414	10	Bolt M14 x 30	
19	1001112766	1	Bracket, Muffler	
20	0940070	1	Bumper	
21	0961986	2	Bushing, Flanged	
22	1001131542	1	Lanyard	
23	1320022	3	Clamp	
24	1320058	2	Clamp	
25	1320060	1	Clamp	
26	1320223	1	J-Clip	
27	1340065	1	Air Cleaner Assembly	
27	7003655	1	Element, Air Cleaner	
27	7015013	1	Baffle, Rubber	
27	7015014	1	Clamp, Cap	
27	7015015	1	Cup	
27	7015003	1	Wingnut	
28	1671023	1	Shroud, Fan	
29	1703162	2	Decal - Fan Blade	
30	2060025	1	Fan	
31	2220451	1	Fitting, Straight	
32	2220498	1	Fitting, Elbow	
33	2720058	34 ft /10.3m	Hose	
34	2720500	1	Hose, Oil Cooler (Top)	
35	2720501	1	Hose, Oil Cooler (Bottom)	
36	2750532	0.75 ft /0.2m	Hose	
37	2902065	1	Pump Coupling Kit (See Separate Breakdown in this Section)	
39	3200362	2	Mount, Motor (Front)	
40	3200401	2	Mount, Motor (Rear)	

SECTION 3 - ENGINE

ITEM	PART NUMBER	QTY	DESCRIPTION	REV
41	1001257277	1	Muffler	
42	3300454	10	Nut 1/4	
43	3311405	5	Nut 1/4	
44	3311505	5	Nut 5/16	
45	3311605	30	Nut 3/8	
46	3311805	5	Nut 1/2	
47	3422532	1	Pin, Hitch	
48	3520054	2	Plug	
49	3537416	1	Plate, Mounting (Front Right)	
50	3539971	1	Bracket, Engine Mounting (Front)	
51	3573142	1	Bracket, Engine Mounting (Rear)	
52	3573411	2	Plate, Clamp	
53	3573412	1	Gusset	
54	3573529	1	Plate, Mounting (Front Left)	
55	3580158	1	Pulley	
56	1001108616	1	Pump Assembly - Sauer (See Separate Breakdown in this Section)	
57	1001145382	1	Cooler, Engine Oil	
58	3740067	2	Relay, Start	
59	3740080	2	Relay	
60	3960543	1	Seal	
61	3960544	1	Seal	
62	4032022	4	Capscrew M10 x 90	
63	4060804	0.98 ft /0.3m	Flex-Trim	
64	4060805	0.67 ft /0.2m	Flex-Trim	
65	4240099	AR	Tie, Wire (Not Shown)	
66	4568293	1	Pipe, Exhaust	
67	4640751	1	Valve, Oil Drain	
68	4711500	13	Washer 5/16	
69	4711600	68	Washer 3/8	
70	4711800	7	Washer 1/2	
71	4740274	4	Washer, Snubbing	
72	4740518	10	Washer, Nylon	
73	4751400	20	Washer 1/4	
74	4791400	4	Washer 1/4	
75	4846552	1	Plate, Oil Cooler Mounting	
76	4846946	1	Tray	
77	4891800	4	Washer 1/2	
78	4923468	1	Harness, Glow Plugs	
79	4923592	1	Cable, Jumper	
80	1001225118	1	Hose, Air Intake	
81	0272060	1	Box, Air Intake	
82	8410013	1	Clamp, Gear	
83	0761215	2	Bolt M12 x 35mm	
84	4891600	2	Washer 3/8	
85	1001171095	1	Pump Assembly - Sauer Piston (See Separate Breakdown in this Section)	
87	1001112927	1	Pump Assembly - Sauer Gear (See Separate Breakdown in this Section)	
88	3790152	1	O-Ring	
89	3790155	1	O-Ring	

FIGURE 3-9. DEUTZ TD2011 ENGINE INSTALLATION - WITH SAUER PUMP (WITH GENERATOR AND WITHOUT COLD WEATHER PLUS PACKAGE)

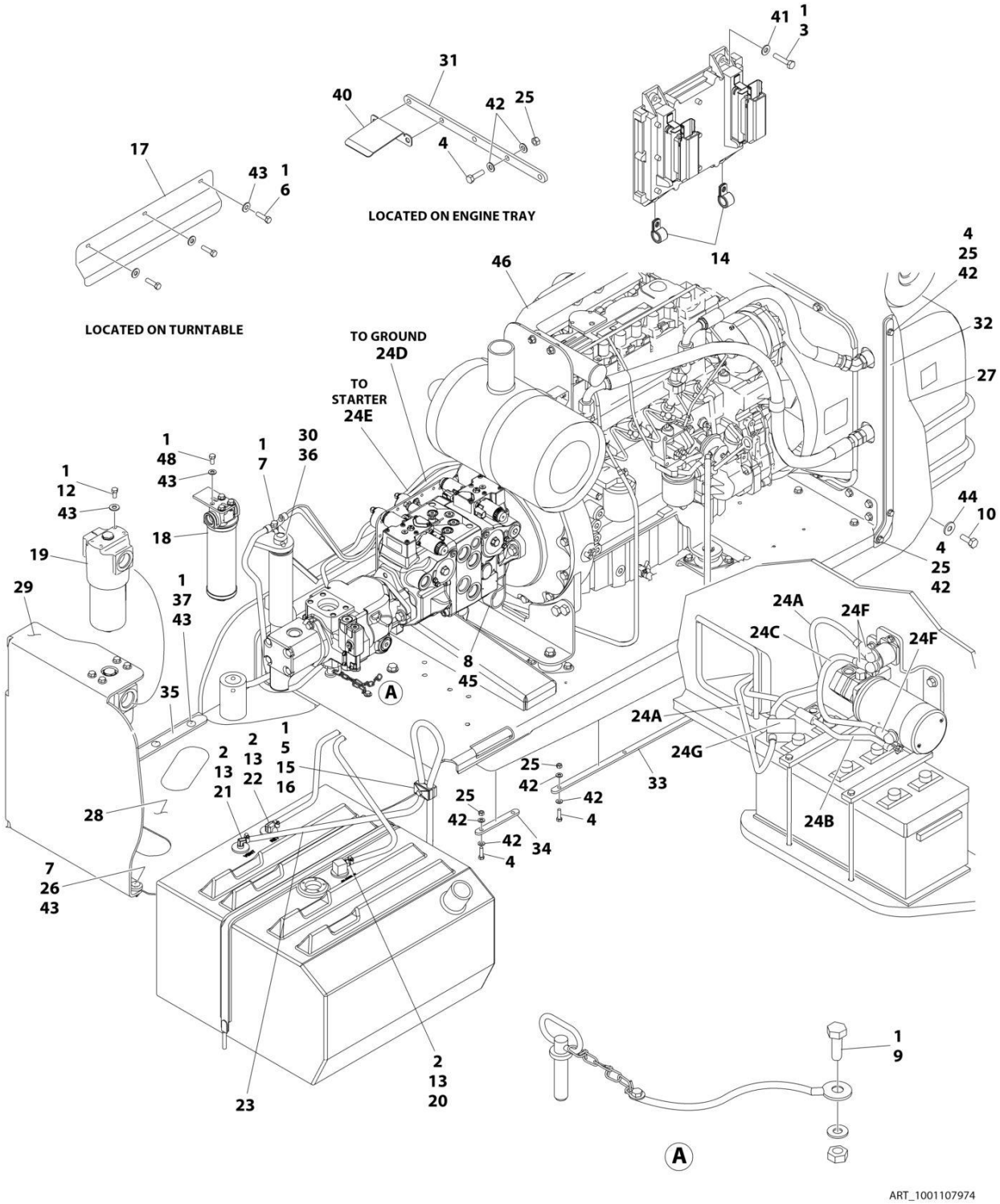

FIGURE 3-9. DEUTZ TD2011 ENGINE INSTALLATION - WITH SAUER PUMP (WITH GENERATOR AND WITHOUT COLD WEATHER PLUS PACKAGE)

ITEM	PART NUMBER	QTY	DESCRIPTION	REV
	1001107974	Ref	DEUTZ TD2011 ENGINE INSTALLATION - WITH SAUER PUMP (WITH GENERATOR AND WITHOUT COLD WEATHER PLUS PACKAGE)	E
1	0100011	AR	Compound, Locking	
2	0100079	AR	Sealant, Pipe	
3	0641410	4	Bolt 1/4 x 1-1/4	
4	0641509	15	Bolt 5/16 x 1-1/8	
5	0641511	1	Bolt 5/16 x 1-3/8	
6	0641605	3	Bolt 3/8 x 5/8	
7	0641610	5	Bolt 3/8 x 1-1/4	
8	0641806	1	Bolt 1/2 x 3/4	
9	0641808	1	Bolt 1/2 x 1	
10	0642010	1	Bolt 5/8 x 1-1/4	
12	0651606	4	Bolt 3/8 x 3/4	
13	1320022	3	Clamp	
14	1320041	2	Clamp	
15	1320187	1	Clamp, Twin	
16	1320190	1	Cover, Clamp	
17	1671121	1	Cover, Generator	
18	1001108617	1	Filter, Pressure	
18	70002231	1	Element, Filter	
19	2120218	1	Filter, High Pressure	
19	2120219	1	Element	
19	70001344	1	O-Ring, Bowl	
19	70006137	1	Seal Kit - Includes O-Ring (Element), O-Ring (Bowl), Back-up Ring (Bowl), Seal Ring (Indicator) and O-Ring (Indicator)	
20	2180348	1	Fitting, Barbed	
21	2220313	1	Fitting, 90 Barbed	
22	2221176	1	Fitting, 90 Elbow	
23	2750532	5 ft/ 1.5m	Hose	
24	2902292	1	Battery Cable Kit	
24A	7027008	1	Cable, Red (To Aux Pump Relay, Battery Positive Terminal and Start Relay)	
24B	7027009	1	Cable, Black (To Aux Pump, Battery Negative Terminal and Ground at Tray Pivot)	
24C	7027010	1	Cable, Red (Aux Pump Relay to Aux Pump)	
24D	7027011	1	Cable, Black (Tray Pivot to Engine Mount)	
24E	7024584	1	Cable, Red (Start Relay to Starter)	
24F	See Note	NSS	Boot, Terminal (Red) (Note: Not Available for Purchase)	
24G	See Note	NSS	Boot, Square Terminal (Red) (Note: Not Available for Purchase)	
25	3311505	15	Nut 5/16	
26	3311605	4	Nut 3/8	
27	3380473	1	Panel, Rubber	
28	3380498	1	Panel	
29	3380723	1	Panel	
30	3422446	1	Pin	
31	3573644	1	Plate, Tray Clamp	
32	3573669	1	Plate, Clamp	
33	3573727	1	Plate, Tray Clamp	
34	3573728	1	Plate, Tray Clamp	

ITEM	PART NUMBER	QTY	DESCRIPTION	REV
35	3574633	1	Plate	
36	3841143	1	Keeper	
37	3900316	10	Screw 3/8 x 1	
38	4240018	2	Strap, Cable Tie (Not Shown)	
39	4240033	AR	Tie, Wire (Not Shown)	
40	4341110	1	Support	
41	4711400	4	Washer 1/4	
42	4711500	30	Washer 5/16	
43	4711600	29	Washer 3/8	
44	4752000	1	Washer 5/8	
45	90028660	1	Clamp	
46	1001107973	1	Engine and Pump Assembly (See Separate Breakdown in this Section)	
48	0641606	4	Bolt 3/8 x 3/4	

FIGURE 3-10. DEUTZ TD2011 ENGINE ASSEMBLY - WITH SAUER PUMP (WITH GENERATOR AND WITHOUT COLD WEATHER PLUS PACKAGE)

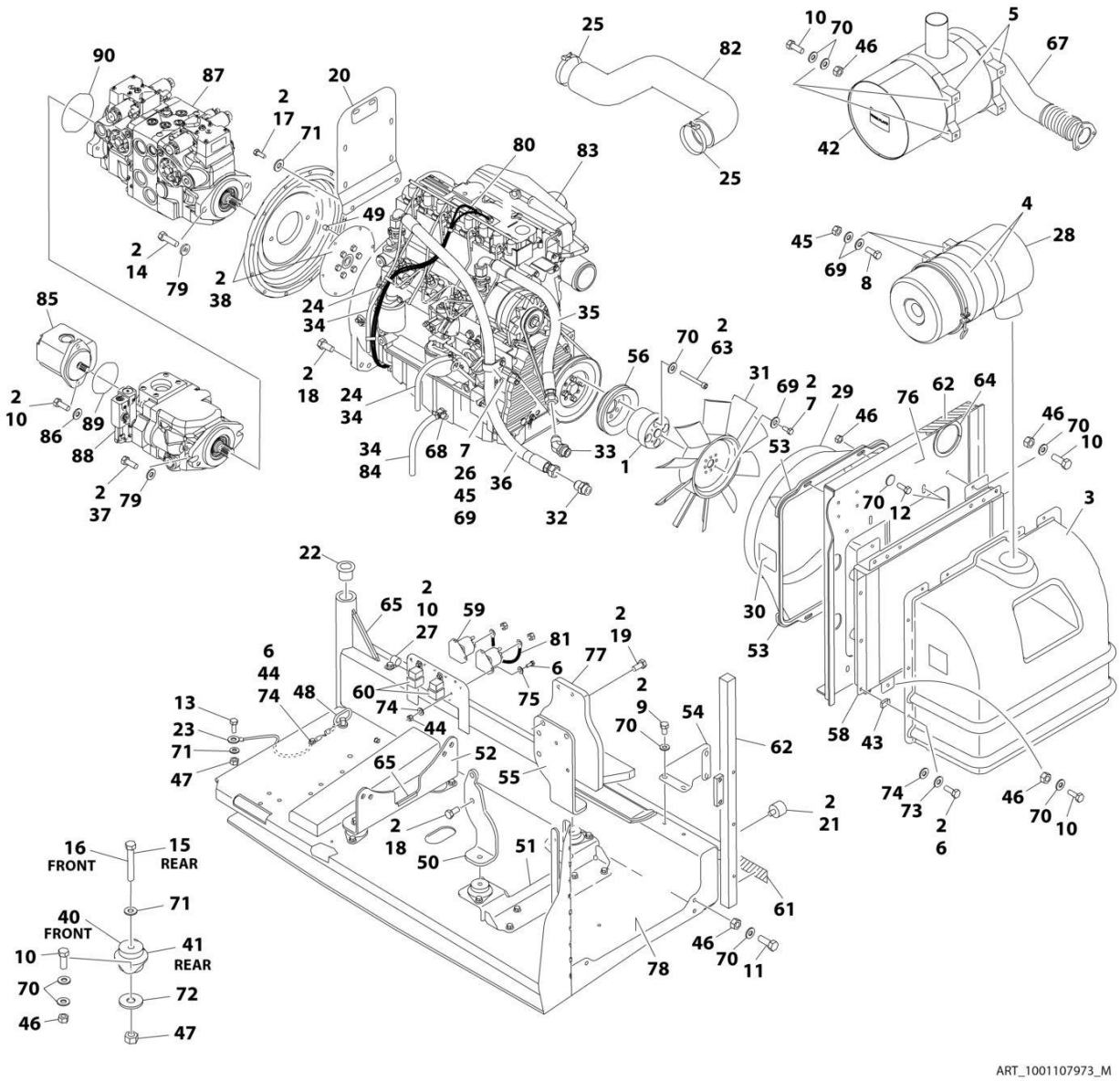

FIGURE 3-10. DEUTZ TD2011 ENGINE ASSEMBLY - WITH SAUER PUMP (WITH GENERATOR AND WITHOUT COLD WEATHER PLUS PACKAGE)

ITEM	PART NUMBER	QTY	DESCRIPTION	REV
	1001107973	Ref	DEUTZ TD2011 ENGINE ASSEMBLY - WITH SAUER PUMPS (WITH SKYPOWER AND WITHOUT COLD WEATHER PLUS PACKAGE)	N
1	0080244	1	Spacer, Fan	
2	0100011	AR	Compound, Locking	
3	0272060	1	Box, Air Intake	
4	0340003	2	Band, Air Cleaner	
5	0340051	2	Band, Muffler	
6	0641406	15	Bolt 1/4 x 3/4	
7	0641506	5	Bolt 5/16 x 3/4	
8	0641507	4	Bolt 5/16 x 7/8	
9	0641605	4	Bolt 3/8 x 5/8	
10	0641608	27	Bolt 3/8 x 1	
11	0641609	2	Bolt 3/8 x 1-1/8	
12	0641610	4	Bolt 3/8 x 1-1/4	
13	0641808	1	Bolt 1/2 x 1	
14	0641814	2	Bolt 1/2 x 1-3/4	
15	0641818	2	Bolt 1/2 x 2-1/4	
16	0641826	2	Bolt 1/2 x 3-1/4	
17	0711214	2	Bolt M12 x 30	
18	0771414	6	Bolt M14 x 30	
19	0711417	4	Bolt M14 x 45	
20	1001112766	1	Bracket, Muffler	
21	0940070	1	Bumper	
22	0961986	2	Bushing, Flanged	
23	1001131542	1	Lanyard	
24	1320022	2	Clamp	
25	1320058	2	Clamp	
26	1320060	1	Clamp	
27	1320223	1	J-Clip	
28	1340065	1	Air Cleaner Assembly	
28	7003655	1	Element, Air Cleaner	
28	7015013	1	Baffle, Rubber	
28	7015014	1	Clamp, Cap	
28	7015015	1	Cup	
28	7015003	1	Wingnut	
29	1671023	1	Shroud, Fan	
30	1703162	2	Decal - Fan Blade	
31	2060025	1	Fan	
32	2220451	1	Fitting, Straight	
33	2220498	1	Fitting, Elbow	
34	2720058	34 ft/ 10.3m	Hose	
35	2720500	1	Hose, Oil Cooler (Top)	
36	2720501	1	Hose, Oil Cooler (Bottom)	
37	0761215	2	Bolt M12 x 35mm	
38	2902065	1	Pump Coupling Kit (See Separate Breakdown in this Section)	
40	3200362	2	Mount, Motor (Front)	
41	3200401	2	Mount, Motor (Rear)	

ITEM	PART NUMBER	QTY	DESCRIPTION	REV
42	1001257277	1	Muffler	
43	3300454	10	Nut	
44	3311405	5	Nut 1/4	
45	3311505	5	Nut 5/16	
46	3311605	30	Nut 3/8	
47	3311805	5	Nut 1/2	
48	3422532	1	Pin, Hitch	
49	3520054	2	Plug	
50	3537416	1	Plate, Mounting (Front Right)	
51	3539971	1	Bracket, Engine Mounting (Front)	
52	3573142	1	Bracket, Engine Mounting (Rear)	
53	3573411	2	Plate, Clamp	
54	3573412	1	Gusset	
55	3573529	1	Plate, Mounting (Front Left)	
56	3580320	1	Pulley	
58	1001145382	1	Cooler, Engine Oil	
59	3740067	2	Relay, Start	
60	3740080	2	Relay	
61	3960543	1	Seal	
62	3960544	1	Seal	
63	4032022	4	Capscrew M10 x 90	
64	4060804	0.98 ft /0.3m	Flex-Trim	
65	4060805	0.67 ft /0.2m	Flex-Trim	
66	4240099	AR	Tie, Wire (Not Shown)	
67	4568293	1	Pipe, Exhaust	
68	4640751	1	Valve, Oil Drain	
69	4711500	13	Washer 5/16	
70	4711600	68	Washer 3/8	
71	4711800	7	Washer 1/2	
72	4740274	4	Washer, Snubbing	
73	4740518	10	Washer, Nylon	
74	4751400	20	Washer 1/4	
75	4791400	4	Washer 1/4	
76	4846552	1	Plate, Oil Cooler Mounting	
77	4846945	1	Mount, Generator	
78	4846946	1	Tray	
79	4891800	4	Washer 1/2	
80	4923468	1	Harness, Glow Plugs	
81	4923592	1	Cable, Jumper	
82	1001225118	1	Hose, Air Intake	
83	1001098601	1	Engine, Deutz TD2011 Components (See Separate Breakdown in this Section)	
84	8410013	1	Clamp, Gear	
85	1001112927	1	Pump Assembly - Sauer Gear (See Separate Breakdown in this Section)	
86	4891600	2	Washer 3/8	
87	1001108616	1	Pump Assembly - Sauer (See Separate Breakdown in this Section)	
88	1001171095	1	Pump Assembly - Sauer Piston (See Separate Breakdown in this Section)	
89	3790152	1	O-Ring	

ITEM	PART NUMBER	QTY	DESCRIPTION	REV
90	3790155	1	O-Ring	
91	2750532	0.8 ft/ 0.2m	Hose	

FIGURE 3-11. DEUTZ TD2011 ENGINE INSTALLATION - WITH SAUER PUMP (WITH GENERATOR AND WITH COLD WEATHER PLUS PACKAGE)

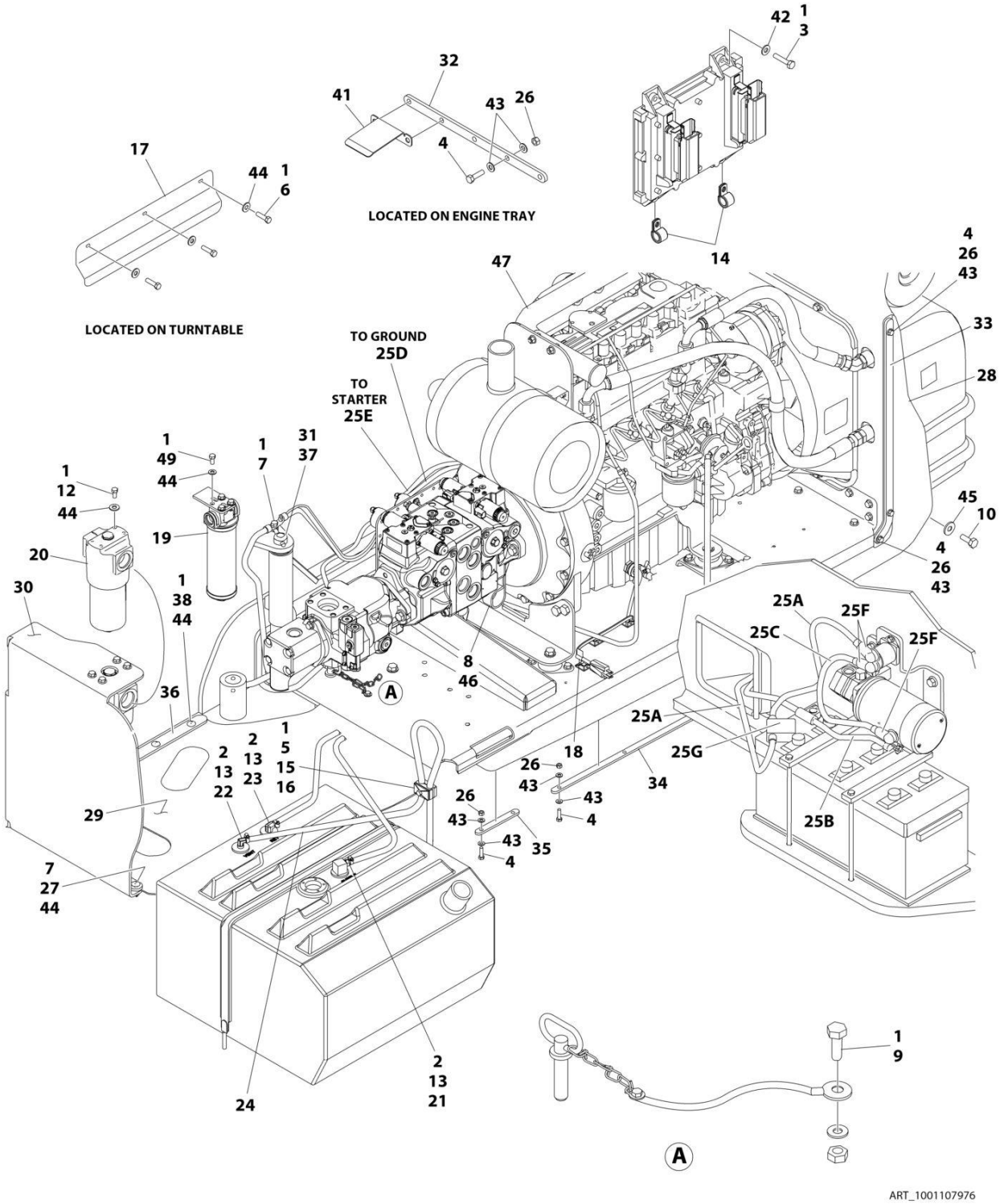

FIGURE 3-11. DEUTZ TD2011 ENGINE INSTALLATION - WITH SAUER PUMP (WITH GENERATOR AND WITH COLD WEATHER PLUS PACKAGE)

ITEM	PART NUMBER	QTY	DESCRIPTION	REV
	1001107976	Ref	DEUTZ TD2011 ENGINE INSTALLATION - WITH SAUER PUMP (WITH GENERATOR AND WITH COLD WEATHER PLUS PACKAGE)	E
1	0100011	AR	Compound, Locking	
2	0100079	AR	Sealant, Pipe	
3	0641410	4	Bolt 1/4 x 1-1/4	
4	0641509	15	Bolt 5/16 x 1-1/8	
5	0641511	1	Bolt 5/16 x 1-3/8	
6	0641605	3	Bolt 3/8 x 5/8	
7	0641610	5	Bolt 3/8 X 1-1/4	
8	0641806	1	Bolt 1/2 x 3/4	
9	0641808	1	Bolt 1/2 x 1	
10	0642010	1	Bolt 5/8 x 1-1/4	
12	0651606	4	Bolt 3/8 x 3/4	
13	1320022	3	Clamp	
14	1320041	2	Clamp	
15	1320187	1	Clamp, Twin	
16	1320190	1	Cover, Clamp	
17	1671121	1	Cover, Generator	
18	1702942	1	Decal - Engine Block Heater	
19	1001108617	1	Filter, Pressure	
19	70002231	1	Element, Filter	
20	2120218	1	Filter, High Pressure	
20	2120219	1	Element	
20	70001344	1	O-Ring, Bowl	
20	70006137	1	Seal Kit - Includes O-Ring (Element), O-Ring (Bowl), Back-up Ring (Bowl), Seal Ring (Indicator) and O-Ring (Indicator)	
21	2180348	1	Fitting, Barbed	
22	2220313	1	Fitting, 90 Barbed	
23	2221176	1	Fitting, 90	
24	2750532	5 ft/ 1.5m	Hose	
25	2902292	1	Battery Cable Kit	
25A	7027008	1	Cable, Red (To Aux Pump Relay, Battery Positive Terminal and Start Relay)	
25B	7027009	1	Cable, Black (To Aux Pump, Battery Negative Terminal and Ground at Tray Pivot)	
25C	7027010	1	Cable, Red (Aux Pump Relay to Aux Pump)	
25D	7027011	1	Cable, Black (Tray Pivot to Engine Mount)	
25E	7024584	1	Cable, Red (Start Relay to Starter)	
25F	See Note	NSS	Boot, Terminal (Red) (Note: Not Available for Purchase)	
25G	See Note	NSS	Boot, Square Terminal (Red) (Note: Not Available for Purchase)	
26	3311505	15	Nut 5/16	
27	3311605	4	Nut 3/8	
28	3380473	1	Panel, Rubber	
29	3380498	1	Panel	
30	3380723	1	Panel	
31	3422446	1	Pin	
32	3573644	1	Plate, Tray Clamp	
33	3573669	1	Plate, Clamp	
34	3573727	1	Plate, Tray Clamp	

SECTION 3 - ENGINE

ITEM	PART NUMBER	QTY	DESCRIPTION	REV
35	3573728	1	Plate, Tray Clamp	
36	3574633	1	Plate	
37	3841143	1	Keeper, Pin	
38	3900316	10	Screw 3/8 x 1	
39	4240018	2	Strap, Cable Tie (Not Shown)	
40	4240033	AR	Tie, Wire (Not Shown)	
41	4341110	1	Support	
42	4711400	4	Washer 1/4	
43	4711500	30	Washer 5/16	
44	4711600	29	Washer 3/8	
45	4752000	1	Washer 5/8	
46	90028660	1	Clamp	
47	1001107975	1	Engine and Pump Assembly (See Separate Breakdown in this Section)	
49	0641606	4	Bolt 3/8 x 3/4	

FIGURE 3-12. DEUTZ TD2011 ENGINE ASSEMBLY - WITH SAUER PUMP (WITH GENERATOR AND WITH COLD WEATHER PLUS PACKAGE)

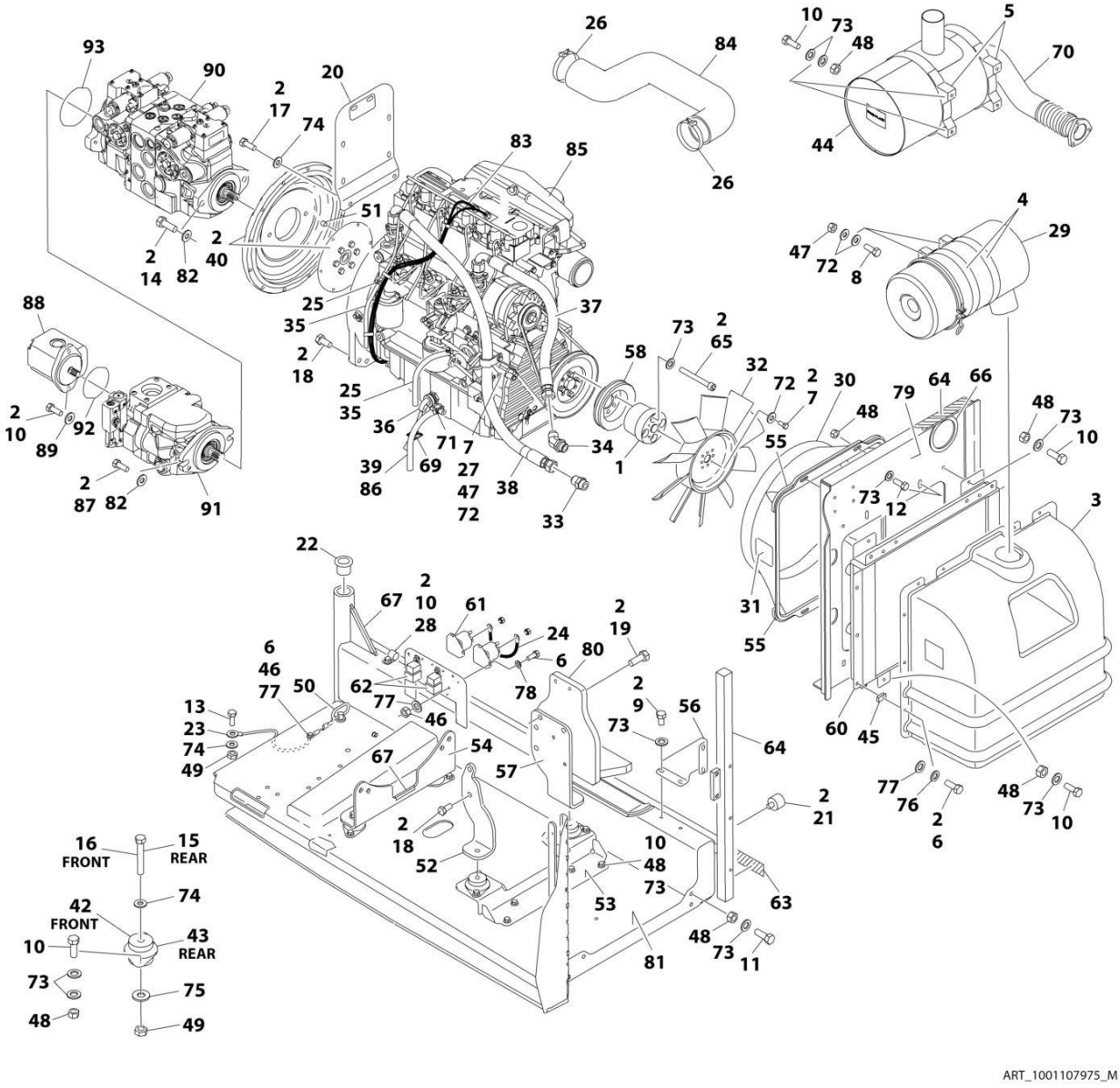

FIGURE 3-12. DEUTZ TD2011 ENGINE ASSEMBLY - WITH SAUER PUMP (WITH GENERATOR AND WITH COLD WEATHER PLUS PACKAGE)

ITEM	PART NUMBER	QTY	DESCRIPTION	REV
	1001107975	Ref	DEUTZ TD2011 ENGINE ASSEMBLY - WITH SAUER PUMPS (WITH SKYPOWER AND WITH COLD WEATHER PLUS PACKAGE)	M
1	0080244	1	Spacer, Fan	
2	0100011	AR	Compound, Locking	
3	0272060	1	Box, Air Intake	
4	0340003	2	Band, Air Cleaner	
5	0340051	2	Band, Muffler	
6	0641406	15	Bolt 1/4 x 3/4	
7	0641506	5	Bolt 5/16 x 3/4	
8	0641507	4	Bolt 5/16 x 7/8	
9	0641605	4	Bolt 3/8 x 5/8	
10	0641608	27	Bolt 3/8 x 1	
11	0641609	2	Bolt 3/8 x 1-1/8	
12	0641610	4	Bolt 3/8 x 1-1/4	
13	0641808	1	Bolt 1/2 x 1	
14	0641814	2	Bolt 1/2 x 1-3/4	
15	0641818	2	Bolt 1/2 x 2-1/4	
16	0641826	2	Bolt 1/2 x 3-1/4	
17	0711214	2	Bolt M12 x 30	
18	0771414	6	Bolt M14 x 30	
19	0711417	4	Bolt M14 x 45	
20	1001112766	1	Bracket, Muffler	
21	0940070	1	Bumper	
22	0961986	2	Bushing, Flanged	
23	1001131542	1	Lanyard	
24	1060904	1	Cable, Jumper	
25	1320022	2	Clamp	
26	1320058	2	Clamp	
27	1320060	1	Clamp	
28	1320223	1	J-Clip	
29	1340065	1	Air Cleaner Assembly	
29	7003655	1	Element, Air Cleaner	
29	7015013	1	Baffle, Rubber	
29	7015014	1	Clamp, Cap	
29	7015015	1	Cup	
29	7015003	1	Wingnut	
30	1671023	1	Shroud, Fan	
31	1703162	2	Decal - Fan Blade	
32	2060025	1	Fan	
33	2220451	1	Fitting, Straight	
34	2220498	1	Fitting, Elbow	
35	2720058	34 ft/ 10.3m	Hose	
36	2580062	1	Heater, Engine Block	
37	2720500	1	Hose, Oil Cooler (Top)	
38	2720501	1	Hose, Oil Cooler (Bottom)	
39	2750532	0.75 ft /0.2m	Hose	
40	2902065	1	Pump Coupling Kit (See Separate Breakdown in this Section))	

SECTION 3 - ENGINE

ITEM	PART NUMBER	QTY	DESCRIPTION	REV
42	3200362	2	Mount, Motor (Front)	
43	3200401	2	Mount, Motor (Rear)	
44	1001257277	1	Muffler	
45	3300454	10	Nut	
46	3311405	5	Nut 1/4	
47	3311505	5	Nut 5/16	
48	3311605	30	Nut 3/8	
49	3311805	5	Nut 1/2	
50	3422532	1	Pin, Hitch	
51	3520054	2	Plug	
52	3537416	1	Plate, Mounting (Front Right)	
53	3539971	1	Bracket, Engine Mounting (Front)	
54	3573142	1	Bracket, Engine Mounting (Rear)	
55	3573411	2	Plate, Clamp	
56	3573412	1	Gusset	
57	3573529	1	Plate, Mounting (Front Left)	
58	3580320	1	Pulley	
60	1001145382	1	Cooler, Engine Oil	
61	3740067	2	Relay, Start	
62	3740080	2	Relay	
63	3960543	1	Seal	
64	3960544	1	Seal	
65	4032022	4	Capscrew M10 x 90	
66	4060804	0.98 ft /0.3m	Flex-Trim	
67	4060805	0.67 ft /0.2m	Flex-Trim	
68	4240099	AR	Tie, Wire (Not Shown)	
69	4460234	3	Mount, Wire Tie	
70	4568293	1	Pipe, Exhaust	
71	4640751	1	Valve, Oil Drain	
72	4711500	13	Washer 5/16	
73	4711600	68	Washer 3/8	
74	4711800	7	Washer 1/2	
75	4740274	4	Washer, Snubbing	
76	4740518	10	Washer, Nylon	
77	4751400	20	Washer 1/4	
78	4791400	4	Washer 1/4	
79	4846552	1	Plate, Oil Cooler Mounting	
80	4846945	1	Mount, Generator	
81	4846946	1	Tray	
82	4891800	4	Washer 1/2	
83	4923468	1	Harness, Glow Plugs	
84	1001225118	1	Hose, Air Intake	
85	1001098601	1	Engine, Deutz TD2011 Components (See Separate Breakdown in this Section)	
86	8410013	1	Clamp, Gear	
87	0761215	2	Bolt M12 x 35	
88	1001112927	1	Pump Assembly - Sauer Gear (See Separate Breakdown in this Section)	
89	4891600	2	Washer 3/8	

ITEM	PART NUMBER	QTY	DESCRIPTION	REV
90	1001108616	1	Pump Assembly - Sauer Tandem (See Separate Breakdown in this Section)	
91	1001171095	1	Pump Assembly - Sauer Piston (See Separate Breakdown in this Section)	
92	3790152	1	O-Ring	
93	3790155	1	O-Ring	

FIGURE 3-13. DEUTZ TD2011 ENGINE COMPONENTS

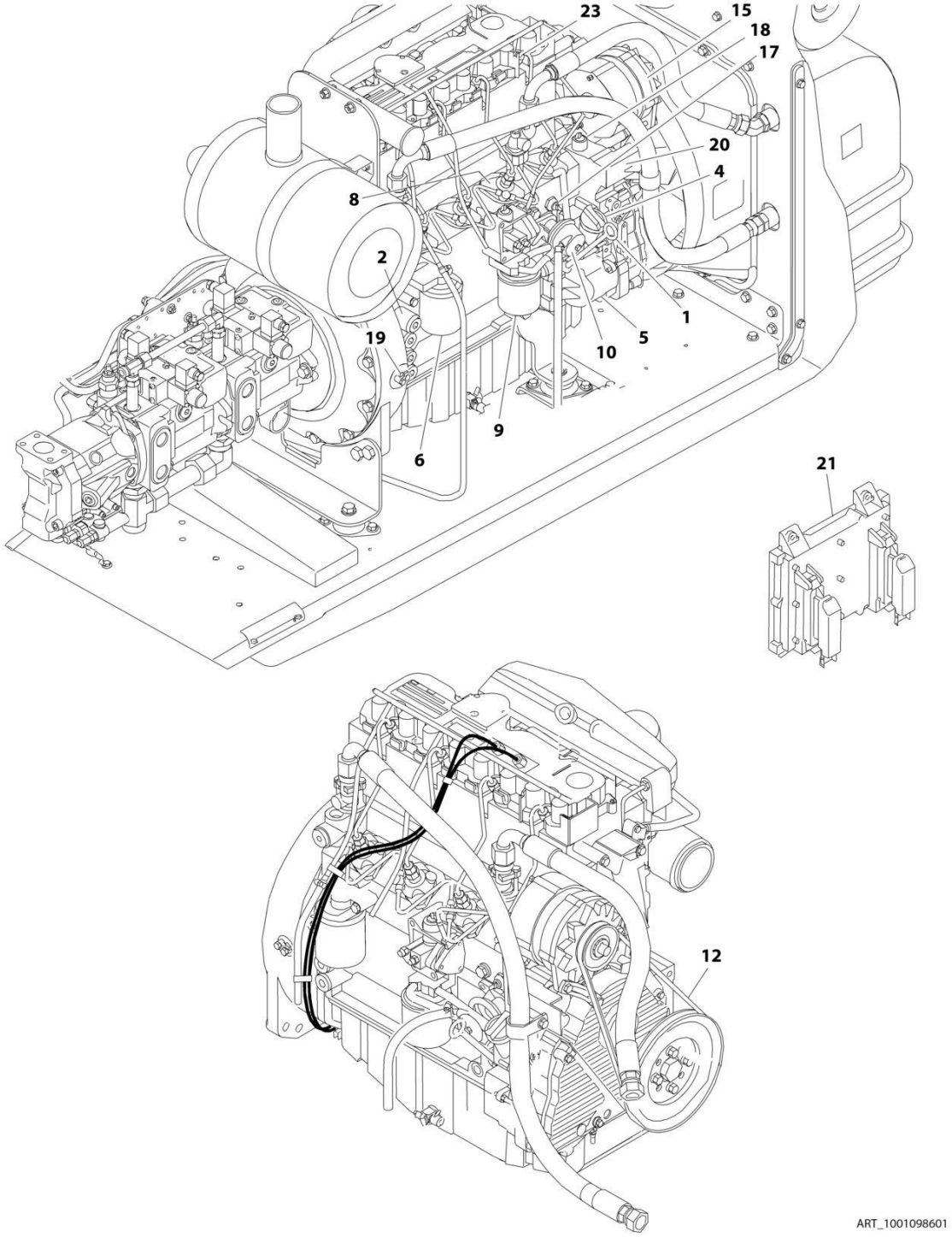

FIGURE 3-13. DEUTZ TD2011 ENGINE COMPONENTS

ITEM	PART NUMBER	QTY	DESCRIPTION	REV
	1001098601	Ref	DEUTZ TD2011 ENGINE COMPONENTS	C
1	7027235	1	Dipstick	
1	70000044	1	O-Ring	
2	70003475	1	Thermostat	
2	7020460	1	Compression Spring	
3	70001870	1	Flywheel (Not Shown)	
3	7024579	1	Gear, Ring (Not Shown)	
4	7020465	1	Cap, Filler	
5	70001850	1	Pump, Oil	
5	7020468	1	Seal Between Oil Pump and Engine Block (Not Shown)	
6	7016331	1	Filter, Oil	
6	7027236	1	Sender, Temperature (Located near Oil Filter)	
8		Ref	Injector Pump	
8	70001128	AR	"A" Series	
8	70001129	AR	"B" Series	
8	70001130	AR	"C" Series	
8	70001131	AR	"D" Series	
8	7020447	AR	Gasket (1 per Injector)	
9	7016328	1	Filter, Fuel	
10	70000916	1	Pump Fuel Supply	
10	70001435	1	Repair Kit	
10	70000917	1	O-Seal Between Fuel Pump and Engine Block (Not Shown)	
10	70000918	1	Sealing Ring (Not Shown)	
10	70000919	1	Pump, Hand (Not Shown)	
11	7027239	1	Solenoid, Start (Not Shown - Located near Throttle)	
12	7020414	1	V-Belt	
13	7020471	4	Gasket, Exhaust Manifold to Engine Block (Not Shown)	
13	7020486	1	Gasket, Exhaust Manifold to Exhaust Pipe (Not Shown)	
14	7027240	1	Turbocharger (Not Shown)	
14	70001857	1	Flange, Turbocharger (Not Shown)	
14	70001135	1	Gasket (Not Shown)	
15	70001867	1	Alternator	
15	70001868	1	Regulator, Voltage (Not Shown)	
16	7020479	1	Starter (Not Shown - Located on Right Side of Engine)	
16	7026608	1	Relay, Start (Not Shown)	
17	7027790	1	Sensor, Oil Pressure	
18	7027791	1	Sensor, Temperature (Not Shown)	
19	7024565	1	Sensor, Speed	
20	7027792	1	Actuator Throttle	
20	7027276	2	Spring	
21	1600443	1	Module, EMR2 Controller	
22	70002718	1	Seal, Rear Main (Not Shown)	
23	70003135	4	Injector, Fuel	
23	70003136	1	Ring, Sealing	
24	70001847	1	Valve, Breather (Located - Front Cover) (Not Shown)	
24	70001126	1	O-Ring (Not Shown)	
25	70001125	1	Cap, Breather (Located In Cylinder Head Cover) (Not Shown)	
25	70001126	1	O-Ring (Not Shown)	
26	70001871	4	Gasket, Air Intake Manifold (Not Shown)	
27	70000345	4	Plug, Glow (Not Shown)	

SECTION 3 - ENGINE

ITEM	PART NUMBER	QTY	DESCRIPTION	REV
28	70007353	1	Gasket Kit (Not Shown)	

FIGURE 3-14. DEUTZ TCD2.9L4 ENGINE INSTALLATION - WITH REXROTH PUMP (WITHOUT COLD WEATHER PLUS PACKAGE)

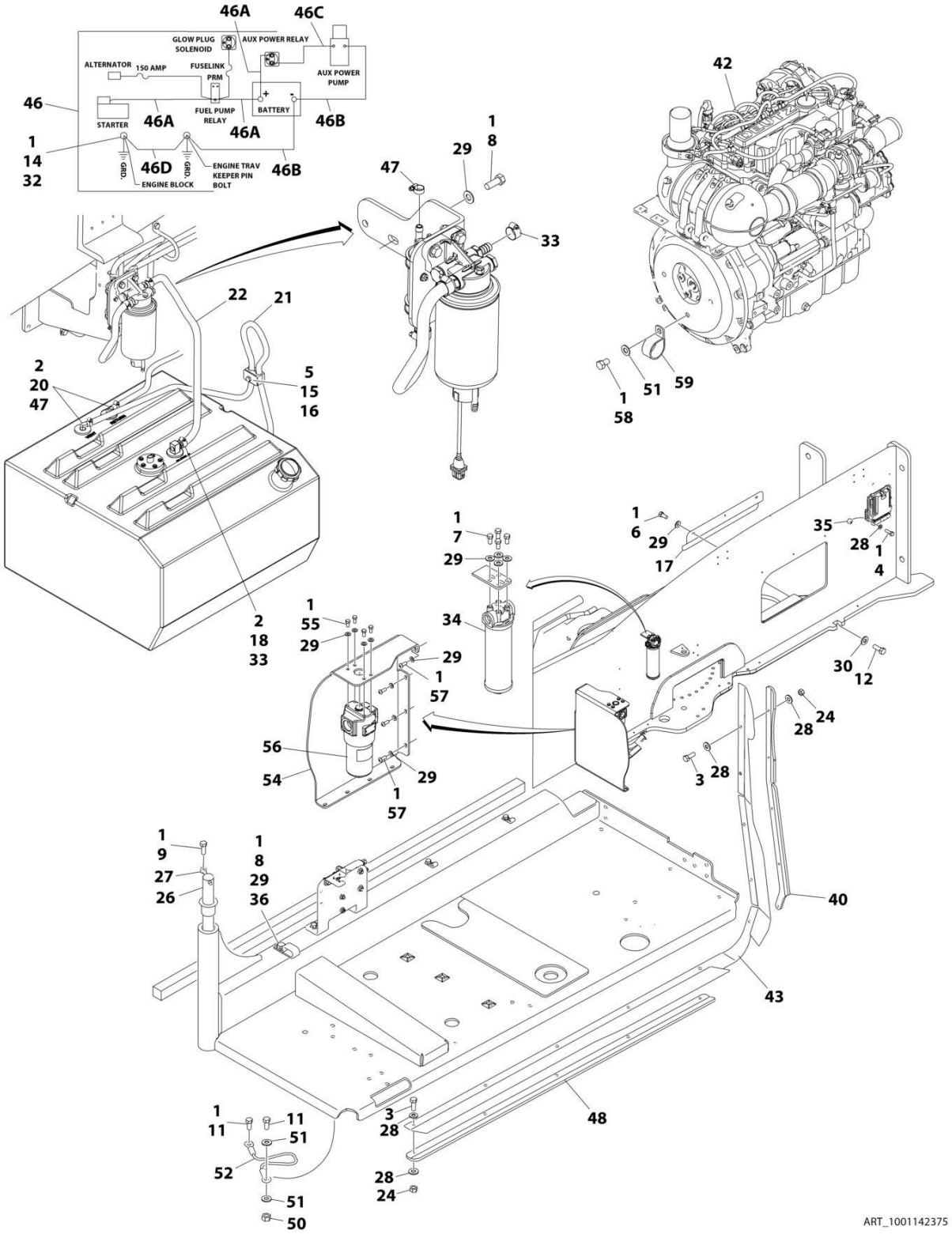

FIGURE 3-14. DEUTZ TCD2.9L4 ENGINE INSTALLATION - WITH REXROTH PUMP (WITHOUT COLD WEATHER PLUS PACKAGE)

ITEM	PART NUMBER	QTY	DESCRIPTION	REV
	1001142375	Ref	DEUTZ TCD2.9L4 ENGINE INSTALLATION - WITH REXROTH PUMP (WITHOUT COLD WEATHER PLUS PACKAGE)	K
1	0100011	AR	Compound, Locking	
2	0100079	AR	Sealant, Pipe	
3	0641408	10	Bolt 1/4 x 1	
4	0641410	4	Bolt 1/4 x 1-1/4	
5	0641511	1	Bolt 5/16 x 1-3/8	
6	0641605	3	Bolt 3/8 x 5/8	
7	0641606	4	Bolt 3/8 x 3/4	
8	0641608	3	Bolt 3/8 x 1	
9	0641610	1	Bolt 3/8 x 1-1/4	
11	0641808	2	Bolt 1/2 x 1	
12	0642010	1	Bolt 5/8 x 1-1/4	
14	0761210	1	Bolt M12 x 20	
15	1320187	1	Clamp	
16	1320190	1	Cover, Clamp	
17	1671121	1	Cover	
18	2180832	1	Fitting, Barbed	
20	2220313	2	Fitting, 90 Barbed	
21	2750532	5 ft/ 1.5m	Hose	
22	1001154405	1.9 ft/ 0.6m	Hose	
24	3311405	10	Nut 1/4	
26	3422446	1	Pin, Pivot	
27	3841143	1	Pin, Keeper	
28	4711400	24	Washer 1/4	
29	4711600	19	Washer 3/8	
30	4752000	1	Washer 5/8	
32	4812100	1	Washer M12	
33	8405006	2	Clamp	
34	1001108617	1	Hydraulic Pressure Filter Assembly	
34	70002231	1	Element, Filter	
35	1001110425	4	Spacer	
36	1001116792	1	Clamp	
38	1001138491	NLA	Harness, Fuel (Use p/n 1001222665) (Not Shown - See Separate Breakdown in ELECTRICAL SECTION)	
40	1001145089	1	Clamp	
42	1001141812	1	Engine Sub-Assembly (See Separate Breakdown in this Section)	
43	1001145560	1	Panel, Rubber	
46	1001142610	1	Battery Cable Kit	
46A	7027046	1	Cable, Battery (Red) (Battery + to Relays and Starter)	
46A	See Note	NSS	Boot, Ring Terminal (Red) (Note: Not Available - Purchase Locally)	
46B	7027047	1	Cable, Battery (Black) (Battery - to Tray Pivot Grd) and Aux Pump	
46B	See Note	NSS	Boot, Ring Terminal (Black) (Note: Not Available - Purchase Locally)	
46C	7027048	1	Cable (Red) (Aux Relay to Aux Pump)	
46C	See Note	NSS	Boot, Ring Terminal (Red) (Note: Not Available - Purchase Locally)	

SECTION 3 - ENGINE

ITEM	PART NUMBER	QTY	DESCRIPTION	REV
46D	7027049	1	Cable, Battery (Black) (Engine to Tray Pivot Grd)	
47	1320022	3	Clamp	
48	1001145842	1	Plate, Clamping	
50	3311805	1	Nut 1/2	
51	4711800	3	Washer 1/2	
52	1001131542	1	Lanyard	
54	3380723	1	Panel, Noise Reduction	
55	0651606	4	Bolt 3/8 x 3/4	
56	2120218	1	Filter, High Pressure	
56	2120219	1	Element, Filter	
56	70001344	1	O-Ring, Bowl	
56	70006137	1	Seal Kit - Includes O-Ring (Element), O-Ring (Bowl), Back-up Ring (Bowl), Seal Ring (Indicator) and O-Ring (Indicator)	
57	3900316	5	Screw 3/8 x 1	
58	0641806	1	Bolt 1/2 x 3/4	
59	90028660	1	Clamp	

FIGURE 3-15. DEUTZ TCD2.9L4 ENGINE SUB-ASSEMBLY - WITH REXROTH PUMP (WITHOUT COLD WEATHER PLUS PACKAGE)

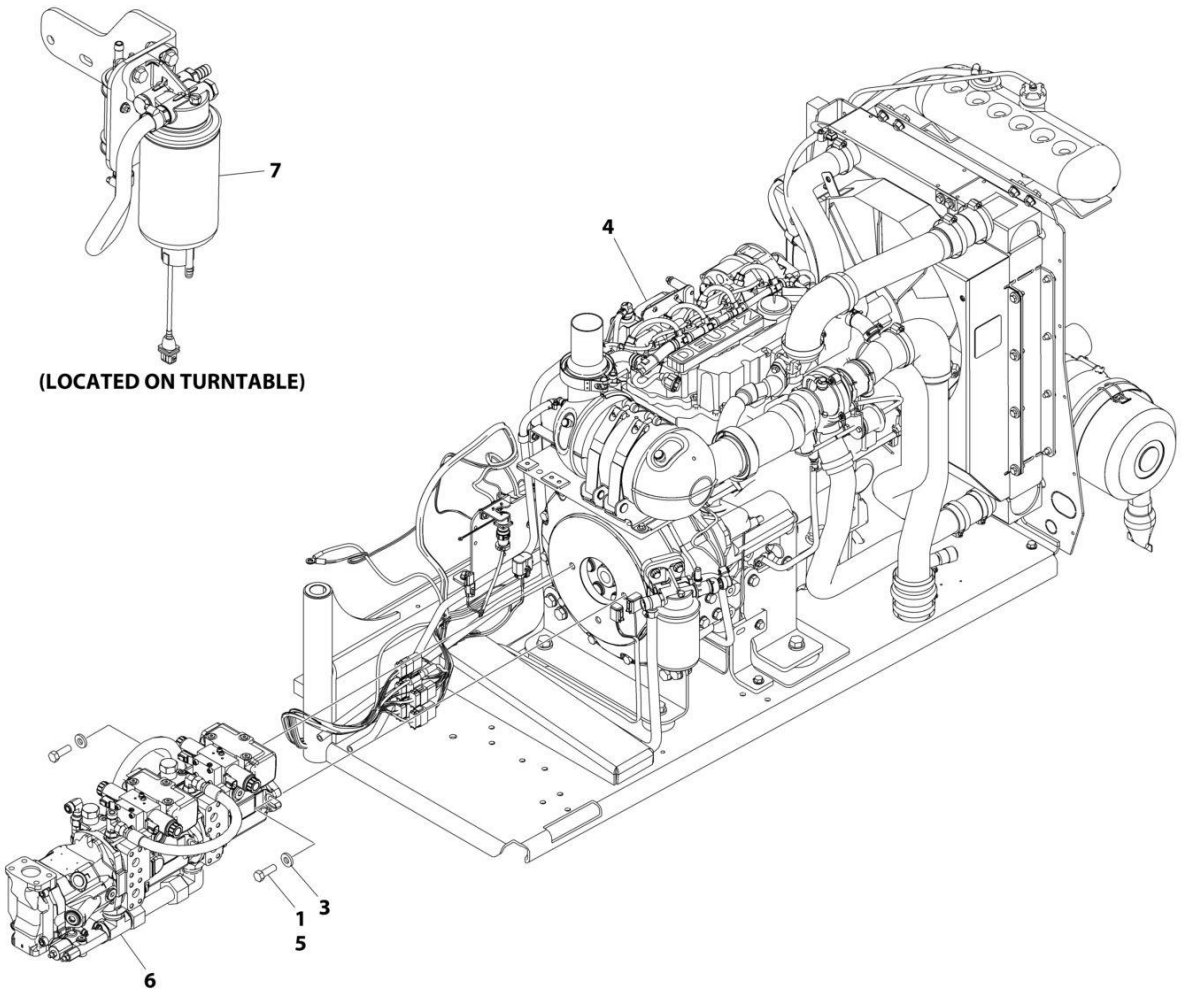

FIGURE 3-15. DEUTZ TCD2.9L4 ENGINE SUB-ASSEMBLY - WITH REXROTH PUMP (WITHOUT COLD WEATHER PLUS PACKAGE)

ITEM	PART NUMBER	QTY	DESCRIPTION	REV
	1001141812	Ref	DEUTZ TCD2.9L4 ENGINE SUB-ASSEMBLY	AO
1	0641812	2	Bolt 1/2 x 1-1/2	
1	0641814	2	Bolt 1/2 x 1-3/4	
3	4891800	2	Washer 1/2	
4	1001134392	1	Engine Assembly (See Separate Breakdown in this Section)	
5	0100011	AR	Compound, Locking	
6	1001152963	1	Pump Assembly - Rexroth (See Separate Breakdown in this Section)	
7	1001165101	1	Bracket, Fuel Pump Filter Assembly (See Separate Breakdown in this Section)	

FIGURE 3-16. DEUTZ TCD2.9L4 ENGINE ASSEMBLY - WITH REXROTH PUMP (WITHOUT COLD WEATHER PLUS PACKAGE)

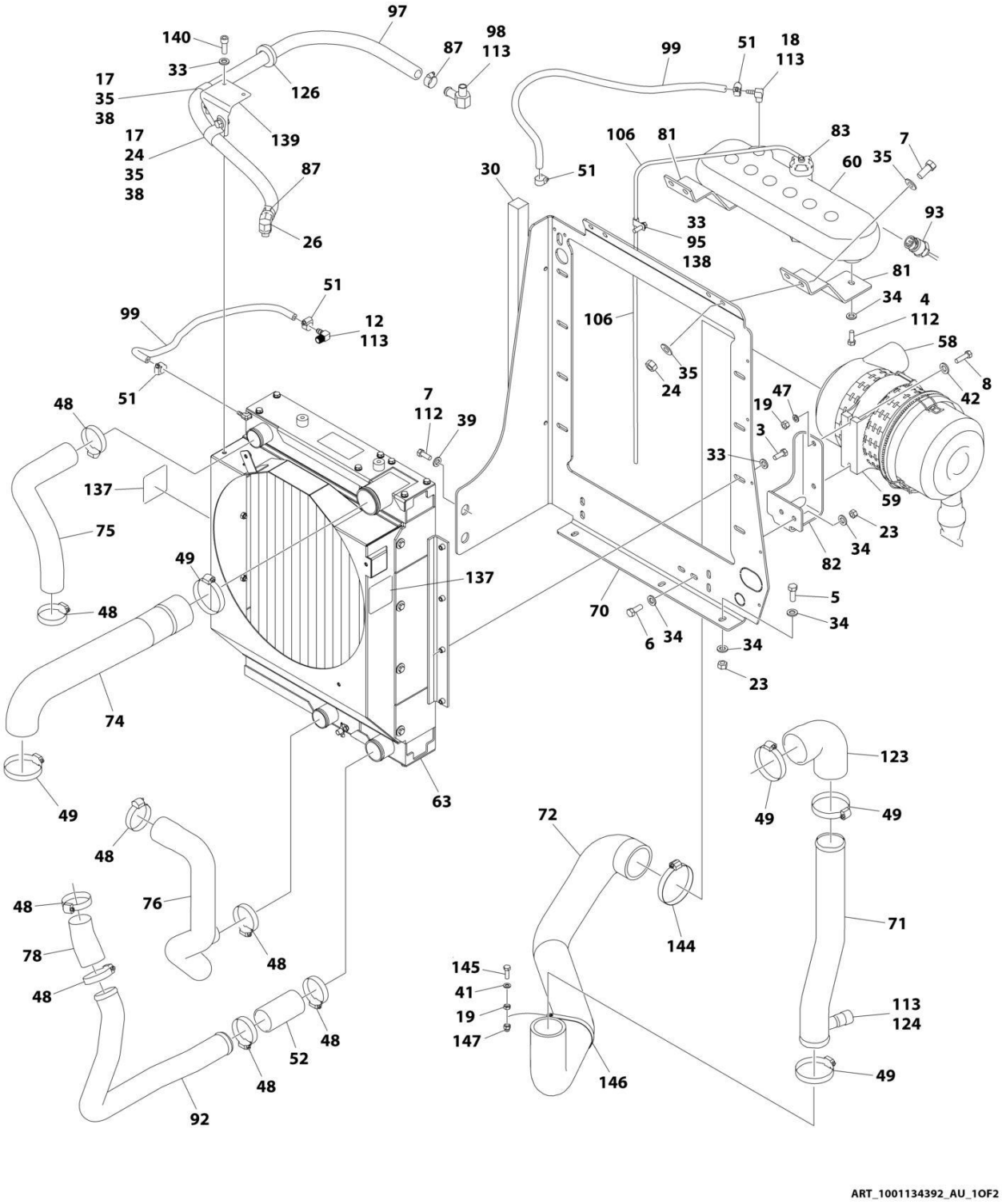

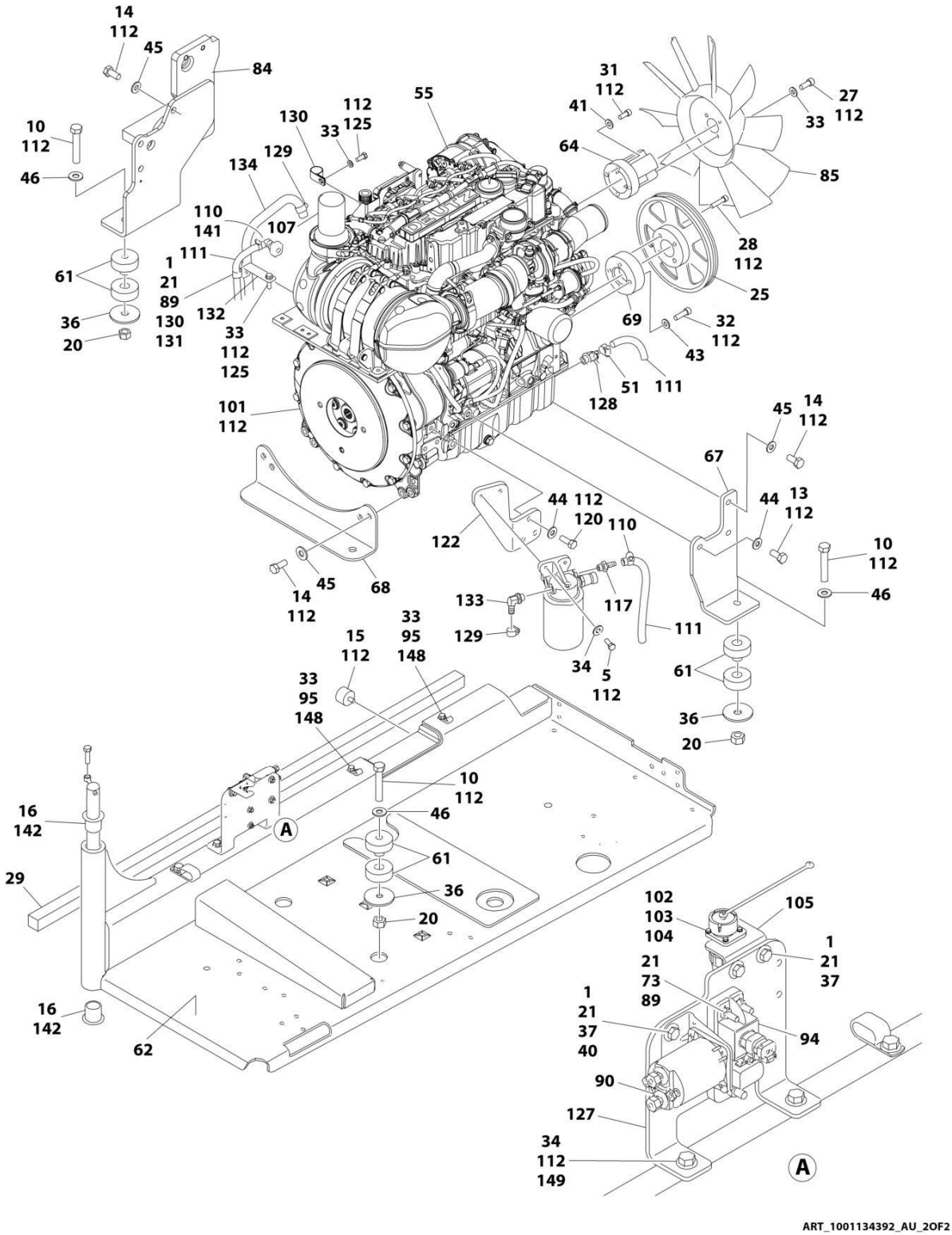

ART_1001134392_AU_2OF2

FIGURE 3-16. DEUTZ TCD2.9L4 ENGINE ASSEMBLY - WITH REXROTH PUMP (WITHOUT COLD WEATHER PLUS PACKAGE)

ITEM	PART NUMBER	QTY	DESCRIPTION	REV
	1001134392	Ref	DEUTZ TCD2.9L4 ENGINE ASSEMBLY	AU
1	0641406	5	Bolt 1/4 x 3/4	
3	0641508	8	Bolt 5/16 x 1	
4	0641606	2	Bolt 3/8 x 3/4	
5	0641608	9	Bolt 3/8 x 1	
6	0641610	2	Bolt 3/8 x 1-1/4	
7	0641708	6	Bolt 7/16 x 1	
8	0700815	2	Bolt M8 x 35	
10	0682028	4	Bolt 5/8 x 3-1/2 Grade 8	
12	1001140564	1	Fitting, 90 Barbed	
13	0771212	1	Bolt M12 x 25 Grade 10.9	
14	0771414	9	Bolt M14 x 30 Grade 10.9	
15	0940070	1	Bumper	
16	0961986	2	Bushing, Flanged	
17	0641706	2	Bolt 7/16 x 3/4	
18	1001134488	1	Fitting, 90 Barbed	
19	3290801	3	Nut M8	
20	3272001	4	Nut 5/8 Grade 8	
21	3311405	6	Nut 1/4	
23	3311605	9	Nut 3/8	
24	3311705	5	Nut 7/16	
25	3580320	1	Pulley	
26	1001141719	1	Fitting, 90 Barbed	
27	3931512	4	Capscrew 5/16 x 3/4	
28	3931628	4	Capscrew 3/8 x 1-3/4	
29	3960543	1	Seal	
30	3960544	1	Seal	
31	4031914	4	Bolt M8 x 50	
32	4032014	4	Bolt M10 x 50	
33	4711500	19	Washer 5/16	
34	4711600	24	Washer 3/8	
35	4711700	10	Washer 7/16	
36	1001146219	4	Washer Special	
37	4751400	8	Washer 1/4	
38	8406302	2	Clamp	
39	4751700	2	Washer 7/16	
40	4791400	2	Starwasher 1/4	
41	4811900	5	Washer M8	
42	4811902	2	Washer M8	
43	4812000	4	Washer M10	
44	4812100	4	Washer M12	
45	4812200	9	Washer M14	
46	4892000	4	Washer 5/8	
47	4831900	2	Washer M8	
48	8405201	8	Clamp	
49	8405204	5	Clamp	
51	8410013	5	Clamp	
52	91563070	1	Coupling, Rubber	

ITEM	PART NUMBER	QTY	DESCRIPTION	REV
55	1001249964	1	Engine, Deutz TCD2.9L4 (See Separate Breakdown in this Section)	
58	1001133633	1	Air Cleaner Assembly	
58	70024190	1	Element, Air Filter	
59	1001133634	1	Clamp	
60	1001166393	1	Tank, Surge	
61	1001155575	4	Mount, Motor	
62	1001191272	1	Tray	
63	1001256864	1	Radiator	
64	1001135138	1	Spacer, Fan	
67	1001135560	1	Support, Engine	
68	1001135562	1	Support, Engine - Rear	
69	1001135679	1	Spacer, Pulley	
70	1001135680	1	Support, Radiator	
71	1001135901	1	Pipe, Air Intake	
72	1001264917	1	Pipe, Air Intake	
73	3931432	1	Capscrew 1/4 x 2	
74	1001264982	1	Pipe, Air Cleaner to Intake	
75	1001135924	1	Hose, Radiator (Upper)	
76	1001135926	1	Hose, Radiator (Lower)	
78	1001135943	1	Coupling, Rubber	
81	1001136626	2	Bracket	
82	1001136665	1	Bracket	
83	1001136834	1	Cap, Tank	
84	1001283008	1	Support, Engine	
85	1001137276	1	Fan	
87	8405007	2	Clamp	
89	4711400	3	Washer 1/4	
90	1001117308	1	Relay	
92	1001135913	1	Pipe, Turbo to Air Cleaner	
93	1001138827	1	Sensor, Coolant Level	
94	1001138228	1	Module, Power	
94	70023592	1	Fuse 20Amp (Switched Output)	
94	70023593	1	Fuse 30Amp (Battery Output)	
95	1001138253	5	Clamp	
96	1001138346	1	Harness, Engine (Not Shown - See Separate Breakdown in ELECTRICAL Section)	
97	1001138524	1	Hose	
98	1001138559	1	Fitting, 90	
99	2720015	4.5 ft/ 1.4m	Hose	
101	2902065	1	Pump Coupling Kit (See Separate Breakdown in this Section)	
102	3310401	3	Nut #4	
103	3910408	3	Screw #4 x 1/2	
104	4710400	3	Washer #4	
105	1001139240	1	Bracket	
106	1001138248	4 ft/ 1.2m	Tubing	
107	1001153024	1	Pipe, Exhaust	
110	1320022	2	Clamp	
111	1001165035	30.5 ft/ 9.3m	Hose	
112	0100011	AR	Compound, Locking	

SECTION 3 - ENGINE

ITEM	PART NUMBER	QTY	DESCRIPTION	REV
113	0100020	AR	Sealant	
114	1001141304	1	Wire, Glow Plug (Not Shown)	
115	1001135779	1	Cable, Alternator Positive (Not Shown)	
117	1001141717	1	Fitting, Straight	
120	0761214	3	Bolt M12 x 30	
122	1001142685	1	Bracket	
123	1001165820	1	Pipe, Elbow	
124	1001143390	1	Indicator, Air Filter Service	
125	0760810	2	Bolt M8 x 20	
126	1001144089	1	Grommet	
127	1001145154	1	Plate, Mounting	
128	4640751	1	Valve, Oil Drain	
129	8405006	2	Clamp	
130	8406102	AR	Clip	
131	8406112	1	Clip	
132	1001138717	1	Bracket	
133	1001142501	1	Fitting, 90 Barbed	
134	1001154405	5 ft/ 1.5m	Hose	
135	1001148843	1	Harness, Fuel Filter (Not Shown - See Separate Breakdown in ELECTRICAL Section)	
137	1703162	2	Decal - Fan	
138	0641503	1	Bolt 5/16 x 3/8	
139	1001153387	1	Plate	
140	3931508	2	Capscrew 5/16 x 1/2	
141	1001155823	1	Coupling	
142	0100062	AR	Adhesive, Loctite #680	
143	4240099	AR	Tie-Strap (Not Shown)	
144	8410011	1	Clamp	
145	0700812	1	Bolt M8 x 25	
146	1321289	1	Clamp	
147	3290806	1	Nut M8	
148	0641510	2	Bolt 5/16 x 1-1/4	
149	0641612	2	Bolt 3/8 x 1-1/2	

SECTION 3 - ENGINE

FIGURE 3-17. DEUTZ TCD2.9L4 ENGINE INSTALLATION - WITH REXROTH PUMP (WITH COLD WEATHER PLUS PACKAGE)

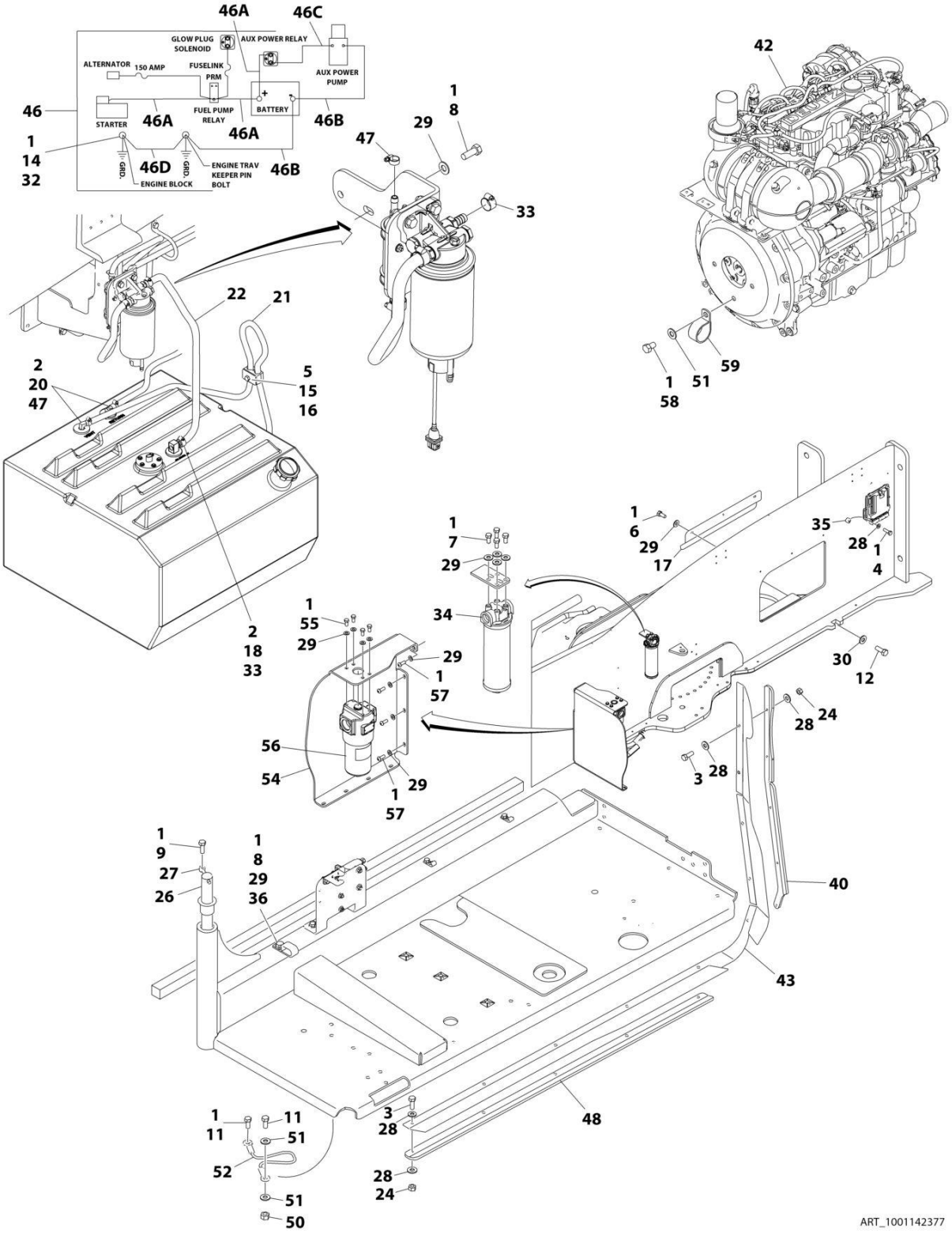

FIGURE 3-17. DEUTZ TCD2.9L4 ENGINE INSTALLATION - WITH REXROTH PUMP (WITH COLD WEATHER PLUS PACKAGE)

ITEM	PART NUMBER	QTY	DESCRIPTION	REV
	1001142377	Ref	DEUTZ TCD2.9L4 ENGINE INSTALLATION - WITH REXROTH PUMP (WITH COLD WEATHER PLUS PACKAGE)	M
1	0100011	AR	Compound, Locking	
2	0100079	AR	Sealant, Pipe	
3	0641408	10	Bolt 1/4 x 1	
4	0641410	4	Bolt 1/4 x 1-1/4	
5	0641511	1	Bolt 5/16 x 1-3/8	
6	0641605	3	Bolt 3/8 x 5/8	
7	0641606	4	Bolt 3/8 x 3/4	
8	0641608	3	Bolt 3/8 x 1	
9	0641610	1	Bolt 3/8 x 1-1/4	
11	0641808	AR	Bolt 1/2 x 1	
12	0642010	1	Bolt 5/8 x 1-1/4	
14	0761210	1	Bolt M12 x 20	
15	1320187	1	Clamp	
16	1320190	1	Cover, Clamp	
17	1671121	1	Cover	
18	2180832	1	Fitting, Barbed	
20	2220313	2	Fitting, 90 Barbed	
21	2750532	5 ft/ 1.5m	Hose	
22	1001154405	1.9 ft /0.6m	Hose	
24	3311405	10	Nut 1/4	
26	3422446	1	Pin, Pivot	
27	3841143	1	Pin, Keeper	
28	4711400	24	Washer 1/4	
29	4711600	19	Washer 3/8	
30	4752000	1	Washer 5/8	
32	4812100	1	Washer M12	
33	8405006	2	Clamp	
34	1001108617	1	Hydraulic Pressure Filter Assembly	
34	70002231	1	Element, Filter	
35	1001110425	4	Spacer	
36	1001116792	1	Clamp	
38	1001138491	NLA	Harness, Fuel (Use p/n 1001222665) (Not Shown - See Separate Breakdown in ELECTRICAL SECTION)	
40	1001145089	1	Clamp	
42	1001141813	1	Engine Sub-Assembly (See Separate Breakdown in this Section)	
43	1001145560	1	Panel, Rubber	
46	1001142610	1	Battery Cable Kit	C
46A	7027046	1	Cable, Battery (Red) (Battery + to Relays and Starter)	
46A	See Note	NSS	Boot, Ring Terminal (Red) (Note: Not Available - Purchase Locally)	
46B	7027047	1	Cable, Battery (Black) (Battery - to Tray Pivot Grd) and Aux Pump	
46B	See Note	NSS	Boot, Ring Terminal (Black) (Note: Not Available - Purchase Locally)	
46C	7027048	1	Cable (Red) (Aux Relay to Aux Pump)	
46C	See Note	NSS	Boot, Ring Terminal (Red) (Note: Not Available - Purchase Locally)	

SECTION 3 - ENGINE

ITEM	PART NUMBER	QTY	DESCRIPTION	REV
46D	7027049	1	Cable, Battery (Black) (Engine to Tray Pivot Grd)	
47	1320022	3	Clamp	
48	1001145842	1	Plate, Clamping	
50	3311805	1	Nut 1/2	
51	4711800	3	Washer 1/2	
52	1001131542	1	Lanyard	
54	3380723	1	Panel, Noise Reduction	
55	0651606	4	Bolt 3/8 x 3/4	
56	2120218	1	Filter, High Pressure	
56	2120219	1	Element, Filter	
56	70001344	1	O-Ring, Bowl	
56	70006137	1	Seal Kit - Includes O-Ring (Element), O-Ring (Bowl), Back-up Ring (Bowl), Seal Ring (Indicator) and O-Ring (Indicator)	
57	3900316	5	Screw 3/8 x 1	
58	0641806	1	Bolt 1/2 x 3/4	
59	90028660	1	Clamp	

FIGURE 3-18. DEUTZ TCD2.9L4 ENGINE SUB-ASSEMBLY - WITH REXROTH PUMP (WITH COLD WEATHER PLUS PACKAGE)

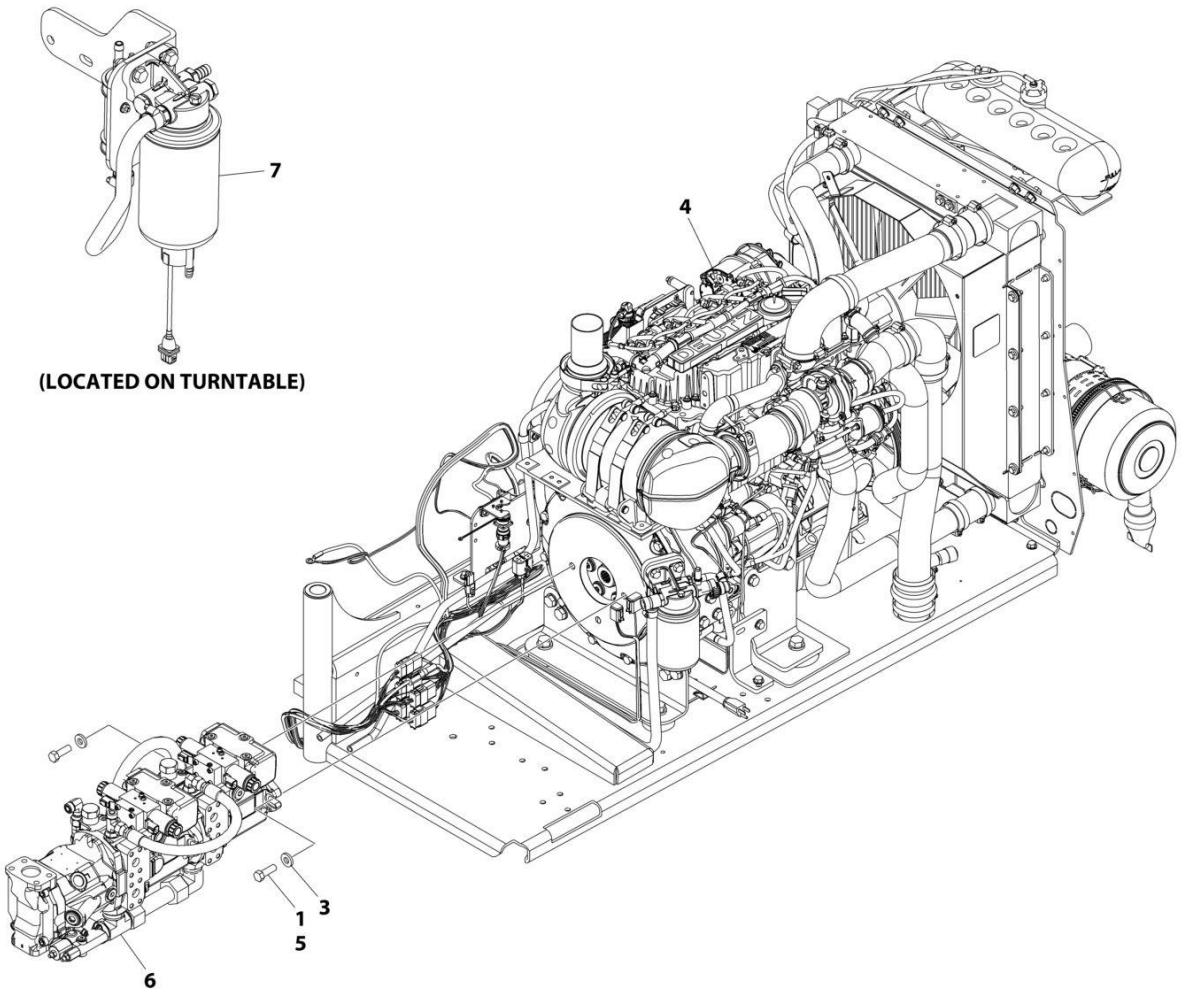

FIGURE 3-18. DEUTZ TCD2.9L4 ENGINE SUB-ASSEMBLY - WITH REXROTH PUMP (WITH COLD WEATHER PLUS PACKAGE)

ITEM	PART NUMBER	QTY	DESCRIPTION	REV
	1001141813	Ref	DEUTZ TCD2.9L4 ENGINE SUB-ASSEMBLY	AP
1	0641812	2	Bolt 1/2 x 1-1/2	
1	0641814	2	Bolt 1/2 x 1-1/2	
3	4740171	2	Washer 1/2	
4	1001141746	1	Engine Assembly (See Separate Breakdown in this Section)	
5	0100011	AR	Compound, Locking	
6	1001152963	1	Pump Assembly - Rexroth (See Separate Breakdown in this Section)	
7	1001165101	1	Bracket, Fuel Pump Filter Assembly (See Separate Breakdown in this Section)	

FIGURE 3-19. DEUTZ TCD2.9L4 ENGINE ASSEMBLY - WITH REXROTH PUMP (WITH COLD WEATHER PLUS PACKAGE)

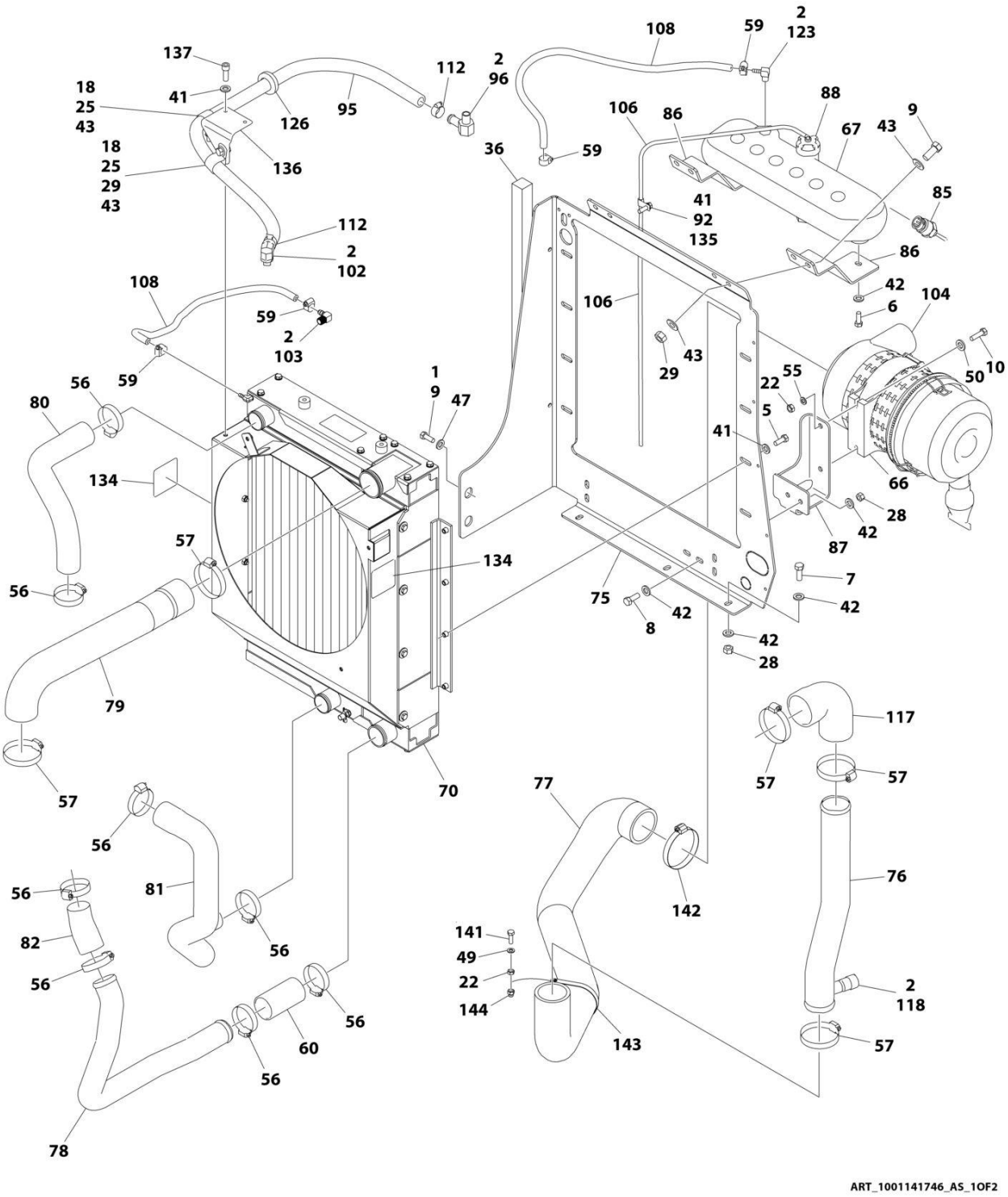

ART_1001141746_AS_1OF2

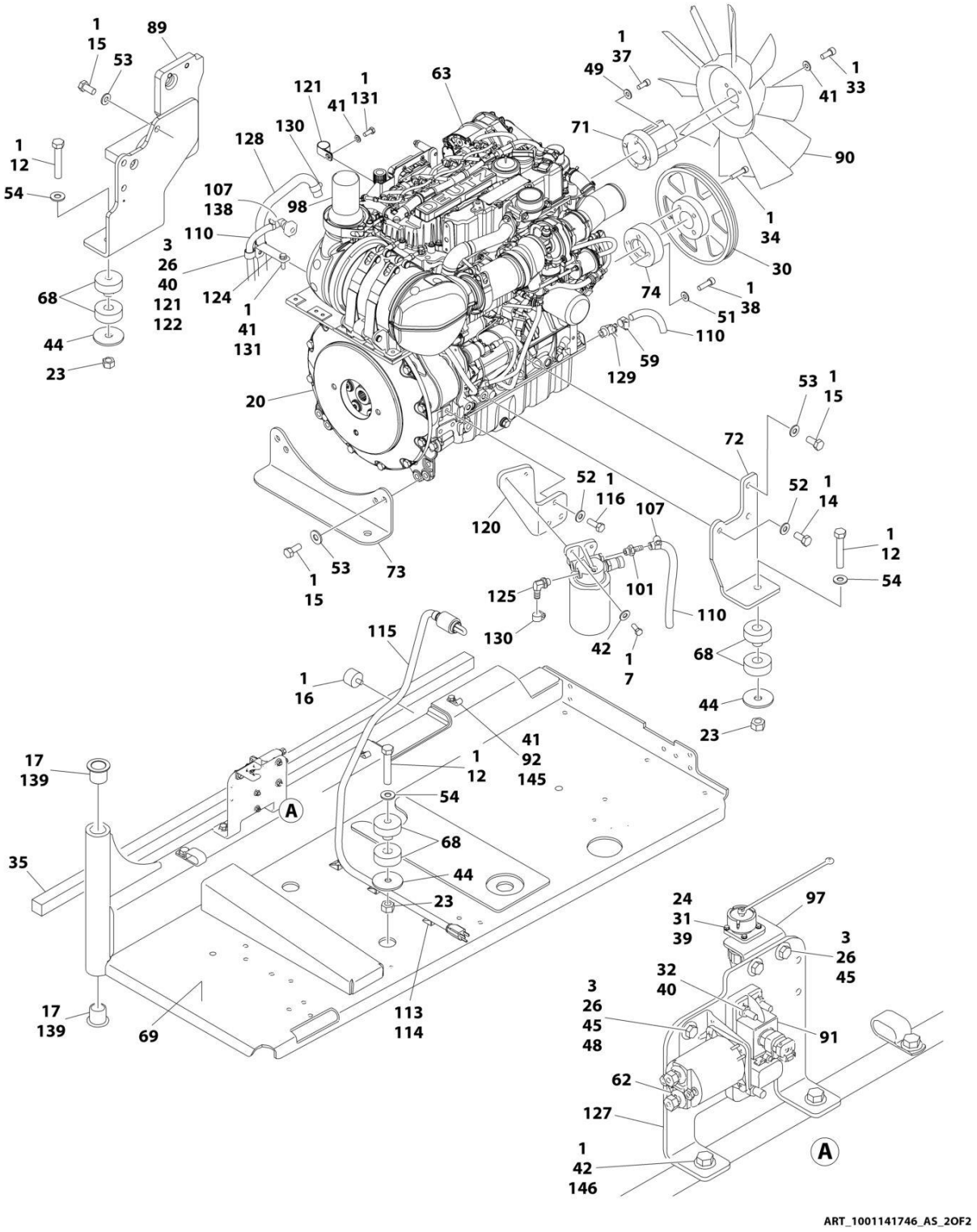
1
15
89
53
1
12
54
68
44
23
121
1
131
41
63
130
128
107
138
98
110
3
26
40
121
122
124
1
41
131
20
1
37
49
1
33
41
71
90
1
34
30
74
1
38
51
110
59
129
53
1
15
72
52
1
116
120
107
52
1
14
1
12
54
53
73
1
15
125
101
110
130
42
1
7
68
44
23
115
1
16
41
92
145
1
12
54
17
139
A
68
35
44
23
113
114
17
139
69
24
31
39
97
3
26
45
32
40
3
26
45
48
91
62
127
1
42
146
A
ART_1001141746_AS_2OF2

FIGURE 3-19. DEUTZ TCD2.9L4 ENGINE ASSEMBLY - WITH REXROTH PUMP (WITH COLD WEATHER PLUS PACKAGE)

ITEM	PART NUMBER	QTY	DESCRIPTION	REV
	1001141746	Ref	DEUTZ TCD2.9L4 ENGINE ASSEMBLY	AS
1	0100011	AR	Compound, Locking	
2	0100020	AR	Sealant	
3	0641406	5	Bolt 1/4 x 3/4	
5	0641508	8	Bolt 5/16 x 1	
6	0641606	2	Bolt 3/8 x 3/4	
7	0641608	9	Bolt 3/8 x 1	
8	0641610	2	Bolt 3/8 x 1-1/4	
9	0641708	6	Bolt 7/16 x 1	
10	0700815	2	Bolt M8 x 35	
12	0682028	4	Bolt 5/8 x 3-1/2 Grade 8	
14	0771212	1	Bolt M12 x 25 Grade 10.9	
15	0771414	9	Bolt M14 x 30 Grade 10.9	
16	0940070	1	Bumper	
17	0961986	2	Bushing, Flanged	
18	0641706	2	Bolt 7/16 x 3/4	
20	2902065	1	Pump Coupling Kit (See Separate Breakdown in this Section)	
22	3290801	3	Nut M8	
23	3272001	4	Nut 5/8 Grade 8	
24	3310401	3	Nut #4	
25	8406302	2	Clamp	
26	3311405	6	Nut 1/4	
28	3311605	9	Nut 3/8	
29	3311705	5	Nut 7/16	
30	3580320	1	Pulley	
31	3910408	3	Screw #4 x 1/2	
32	3931432	1	Capscrew 1/4 x 2	
33	3931512	4	Capscrew 5/16 x 3/4	
34	3931628	4	Capscrew 3/8 x 1-3/4	
35	3960543	1	Seal	
36	3960544	1	Seal	
37	4031914	4	Bolt M8 x 50	
38	4032014	4	Bolt M10 x 50	
39	4710400	3	Washer #4	
40	4711400	3	Washer 1/4	
41	4711500	19	Washer 5/16	
42	4711600	24	Washer 3/8	
43	4711700	10	Washer 7/16	
44	1001146219	4	Washer Special	
45	4751400	8	Washer 1/4	
47	4751700	2	Washer 7/16	
48	4791400	2	Starwasher 1/4	
49	4811900	5	Washer M8	
50	4811902	2	Washer M8	
51	4812000	4	Washer M10	
52	4812100	4	Washer M12	
53	4812200	9	Washer M14	
54	4892000	4	Washer 5/8	
55	4831900	2	Washer M8	

ITEM	PART NUMBER	QTY	DESCRIPTION	REV
56	8405201	8	Clamp	
57	8405204	5	Clamp	
59	8410013	5	Clamp	
60	91563070	1	Coupling, Rubber	
62	1001117308	1	Relay	
63	1001249964	1	Engine, Deutz TCD2.9L4 (See Separate Breakdown in this Section)	
66	1001133634	1	Clamp	
67	1001166393	1	Tank, Surge	
68	1001155575	4	Mount, Motor	
69	1001191272	1	Tray	
70	1001256864	1	Radiator	
71	1001135138	1	Spacer, Fan	
72	1001135560	1	Support, Engine	
73	1001135562	1	Support, Engine - Rear	
74	1001135679	1	Spacer, Pulley	
75	1001135680	1	Support, Radiator	
76	1001135901	1	Pipe, Air Intake	
77	1001264917	1	Hose, Air Intake	
78	1001135913	1	Pipe, Turbo to Air Cleaner	
79	1001264982	1	Hose, Air Cleaner to Intake	
80	1001135924	1	Hose, Radiator (Upper)	
81	1001135926	1	Hose, Radiator (Lower)	
82	1001135943	1	Coupling, Rubber	
85	1001138827	1	Sensor, Coolant Level	
86	1001136626	2	Bracket	
87	1001136665	1	Bracket	
88	1001136834	1	Cap, Tank	
89	1001283008	1	Support, Engine	
90	1001137276	1	Fan	
91	1001138228	1	Module, Power	
91	70023592	1	Fuse 20Amp (Switched Output)	
91	70023593	1	Fuse 30Amp (Battery Output)	
92	1001138253	5	Clamp	
94	1001138346	1	Harness, Engine (Not Shown - See Separate Breakdown in ELECTRICAL Section)	
95	1001138524	1	Hose	
96	1001138559	1	Fitting, 90	
97	1001139240	1	Bracket	
98	1001153024	1	Pipe, Exhaust	
100	1001141304	1	Wire, Glow Plug (Not Shown)	
101	1001141717	1	Fitting, Straight	
102	1001141719	1	Fitting, 90 Barbed	
103	1001140564	1	Fitting, 90 Barbed	
104	1001133633	1	Air Cleaner Assembly	
104	70024190	1	Element, Air Filter	
105	1001135779	1	Cable, Alternator Positive (Not Shown)	
106	1001138248	4 ft/ 1.2m	Tubing	
107	1320022	2	Clamp	
108	2720015	4.5 ft/ 1.4m	Hose	

SECTION 3 - ENGINE

ITEM	PART NUMBER	QTY	DESCRIPTION	REV
110	1001165035	30.5 ft/ 9.3m	Hose	
112	8405007	2	Clamp	
113	4240099	AR	Tie-Strap (Used to Secure Block Heater Cord)	
114	4460234	3	Mount, Wire Tie (Used to Secure Block Heater Cord)	
115	1001140312	1	Heater, Block	
116	0761214	3	Bolt M12 x 30	
117	1001165820	1	Pipe, Elbow	
118	1001143390	1	Indicator, Air Filter Service	
120	1001142685	1	Bracket	
121	8406102	AR	Clip	
122	8406112	1	Clip	
123	1001134488	1	Fitting, 90 Barbed	
124	1001138717	1	Bracket	
125	1001142501	1	Fitting, 90 Barbed	
126	1001144089	1	Grommet	
127	1001145154	1	Plate, Mounting	
128	1001154405	5 ft/ 1.5m	Hose	
129	4640751	1	Valve, Oil Drain	
130	8405006	2	Clamp	
131	0760810	AR	Bolt M8 x 20	
132	1001148843	1	Harness, Fuel Filter (Not Shown - See Separate Breakdown in ELECTRICAL Section)	
134	1703162	2	Decal - Fan	
135	0641503	1	Bolt 5/16 x 3/8	
136	1001153387	1	Plate	
137	3931508	2	Capscrew 5/16 x 1/2	
138	1001155823	1	Coupling	
139	0100062	AR	Adhesive, Loctite #680	
140	1001181895	AR	Adhesive, Loctite #640 (Not Shown - Apply to Block Heater)	
141	0700812	1	Bolt M8 x 25	
142	8410011	1	Clamp	
143	1321289	1	Clamp	
144	3290806	1	Nut M8	
145	0641510	2	Bolt 5/16 x 1-1/4	
146	0641612	2	Bolt 3/8 x 1-1/2	

FIGURE 3-20. DEUTZ TCD2.9L4 ENGINE INSTALLATION - WITH SAUER PUMPS (WITHOUT COLD WEATHER PLUS PACKAGE)

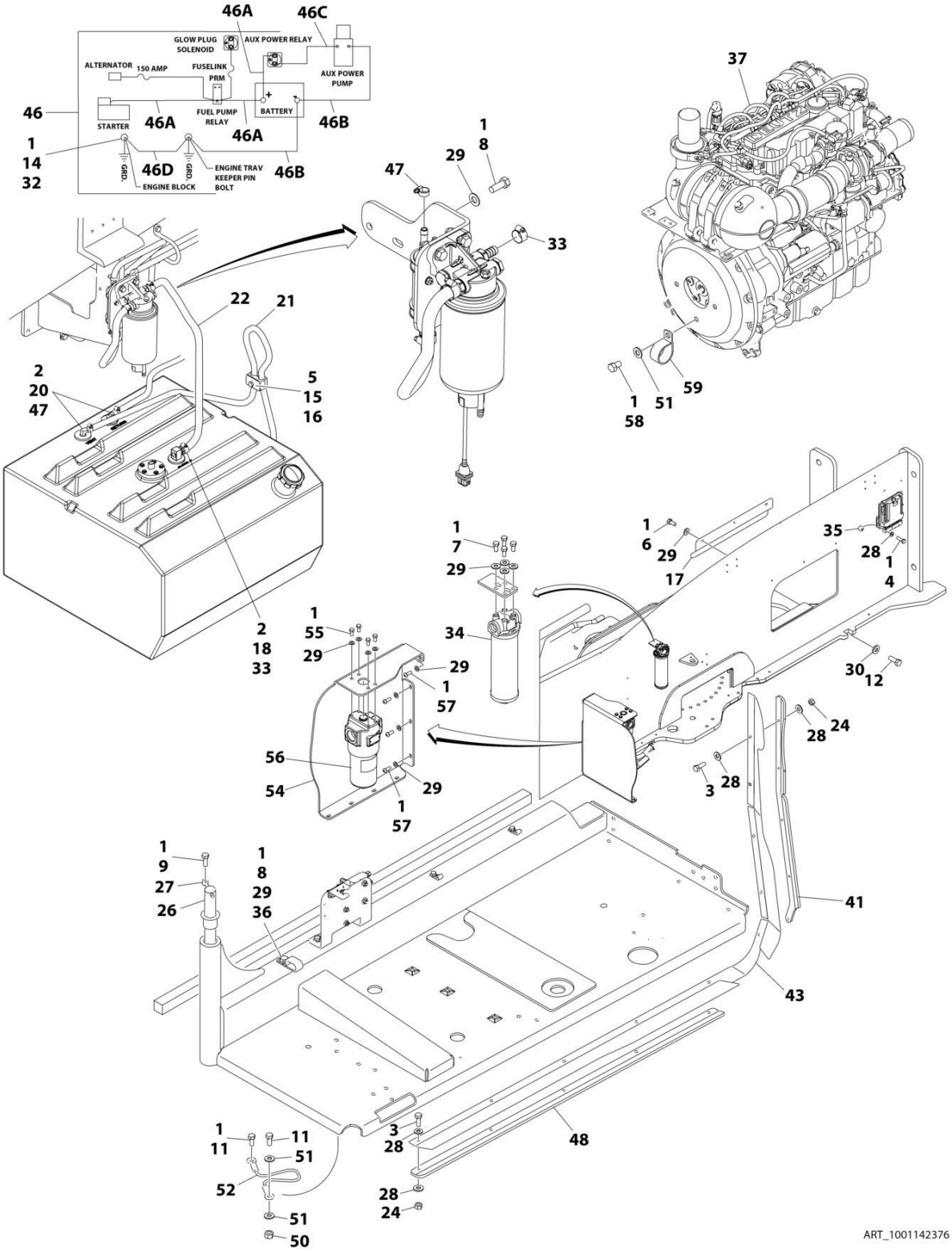

FIGURE 3-20. DEUTZ TCD2.9L4 ENGINE INSTALLATION - WITH SAUER PUMPS (WITHOUT COLD WEATHER PLUS PACKAGE)

ITEM	PART NUMBER	QTY	DESCRIPTION	REV
	1001142376	Ref	DEUTZ TCD2.9L4 ENGINE INSTALLATION - WITH SAUER PUMPS (WITHOUT COLD WEATHER PLUS PACKAGE)	K
1	0100011	AR	Compound, Locking	
2	0100079	AR	Sealant, Pipe	
3	0641408	10	Bolt 1/4 x 1	
4	0641410	4	Bolt 1/4 x 1-1/4	
5	0641511	1	Bolt 5/16 x 1-3/8	
6	0641605	3	Bolt 3/8 x 5/8	
7	0641606	4	Bolt 3/8 x 3/4	
8	0641608	3	Bolt 3/8 x 1	
9	0641610	1	Bolt 3/8 x 1-1/4	
10	0641611	2	Bolt 3/8 x 1-1/4	
11	0641808	2	Bolt 1/2 x 1	
12	0642010	1	Bolt 5/8 x 1-1/4	
14	0761210	1	Bolt M12 x 20	
15	1320187	1	Clamp	
16	1320190	1	Cover, Clamp	
17	1671121	1	Cover	
18	2180832	1	Fitting, Barbed	
20	2220313	2	Fitting, 90 Barbed	
21	2750532	5 ft/ 1.5m	Hose	
22	1001154405	1.9 ft/ 0.6m	Hose	
24	3311405	10	Nut 1/4	
26	3422446	1	Pin, Pivot	
27	3841143	1	Pin, Keeper	
28	4711400	24	Washer 1/4	
29	4711600	19	Washer 3/8	
30	4752000	1	Washer 5/8	
32	4812100	1	Washer M12	
33	8405006	2	Clamp	
34	1001108617	1	Hydraulic Pressure Filter Assembly	
34	70002231	1	Element, Filter	
35	1001110425	4	Spacer	
36	1001116792	1	Clamp	
37	1001134390	1	Engine Sub-Assembly (See Separate Breakdown in this Section)	
39	1001138491	NLA	Harness, Fuel (Use p/n 1001222665) (Not Shown - See Separate Breakdown in ELECTRICAL SECTION)	
41	1001145089	1	Clamp	
43	1001145560	1	Panel, Rubber	
46	1001142610	1	Battery Cable Kit	C
46A	7027046	1	Cable, Battery (Red) (Battery + to Relays and Starter)	
46A	See Note	NSS	Boot, Ring Terminal (Red) (Note: Not Available - Purchase Locally)	
46B	7027047	1	Cable, Battery (Black) (Battery - to Tray Pivot Grd) and Aux Pump	
46B	See Note	NSS	Boot, Ring Terminal (Black) (Note: Not Available - Purchase Locally)	
46C	7027048	1	Cable (Red) (Aux Relay to Aux Pump)	

ITEM	PART NUMBER	QTY	DESCRIPTION	REV
46C	See Note	NSS	Boot, Ring Terminal (Red) (Note: Not Available - Purchase Locally)	
46D	7027049	1	Cable, Battery (Black) (Engine to Tray Pivot Grd)	
47	1320022	3	Clamp	
48	1001145842	1	Plate, Clamping	
50	3311805	1	Nut 1/2	
51	4711800	3	Washer 1/2	
52	1001131542	1	Lanyard	
54	3380723	1	Panel, Noise Reduction	
55	0651606	4	Bolt 3/8 x 3/4	
56	2120218	1	Filter, High Pressure	
56	2120219	1	Element, Filter	
56	70001344	1	O-Ring, Bowl	
56	70006137	1	Seal Kit - Includes O-Ring (Element), O-Ring (Bowl), Back-up Ring (Bowl), Seal Ring (Indicator) and O-Ring (Indicator)	
57	3900316	5	Screw 3/8 x 1	
58	0641806	1	Bolt 1/2 x 3/4	
59	90028660	1	Clamp	

FIGURE 3-21. DEUTZ TCD2.9L4 ENGINE SUB-ASSEMBLY - WITH SAUER PUMP (WITHOUT COLD WEATHER PLUS PACKAGE)

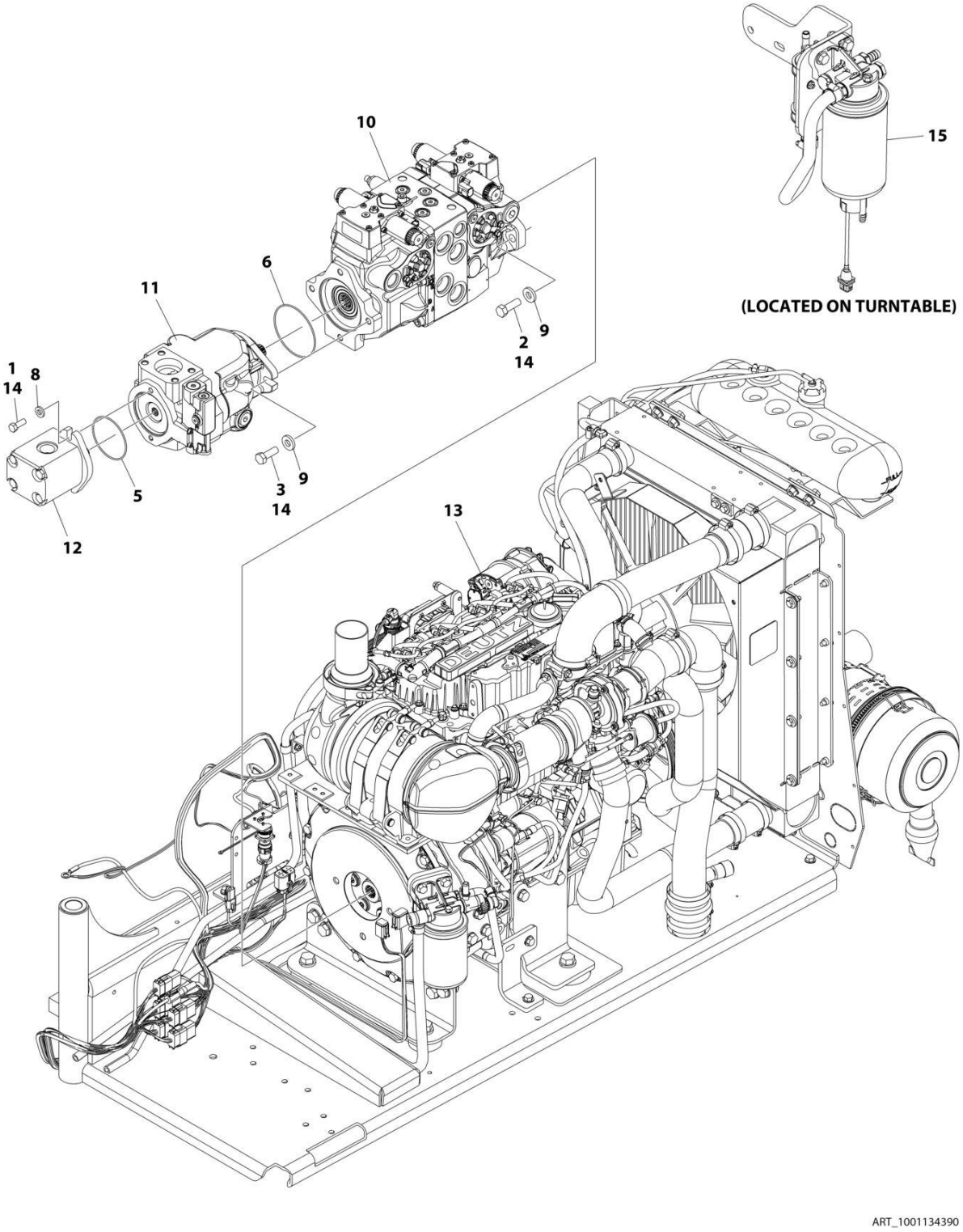

FIGURE 3-21. DEUTZ TCD2.9L4 ENGINE SUB-ASSEMBLY - WITH SAUER PUMP (WITHOUT COLD WEATHER PLUS PACKAGE)

ITEM	PART NUMBER	QTY	DESCRIPTION	REV
	1001134390	Ref	DEUTZ TCD2.9L4 ENGINE SUB-ASSEMBLY	AM
1	0641608	2	Bolt 3/8 x 1	
2	0641812	2	Bolt 1/2 x 1-1/2	
2	0641814	2	Bolt 1/2 x 1-3/4	
3	0761215	2	Bolt M12 x 35	
5	3790152	1	O-Ring	
6	3790155	1	O-Ring	
8	4891600	2	Washer 3/8	
9	4891800	4	Washer 1/2	
10	1001108616	1	Pump Assembly - Sauer Tandem (See Separate Breakdown in this Section)	
11	1001171095	1	Pump Assembly - Sauer Piston (See Separate Breakdown in this Section)	
12	1001112927	1	Pump Assembly - Sauer Gear (See Separate Breakdown in this Section)	
13	1001134392	1	Engine Assembly (See Separate Breakdown in this Section)	
14	0100011	AR	Compound, Locking	
15	1001165101	1	Bracket, Fuel Pump Filter Assembly (See Separate Breakdown in this Section)	

FIGURE 3-22. DEUTZ TCD2.9L4 ENGINE ASSEMBLY - WITH SAUER PUMP (WITHOUT COLD WEATHER PLUS PACKAGE)

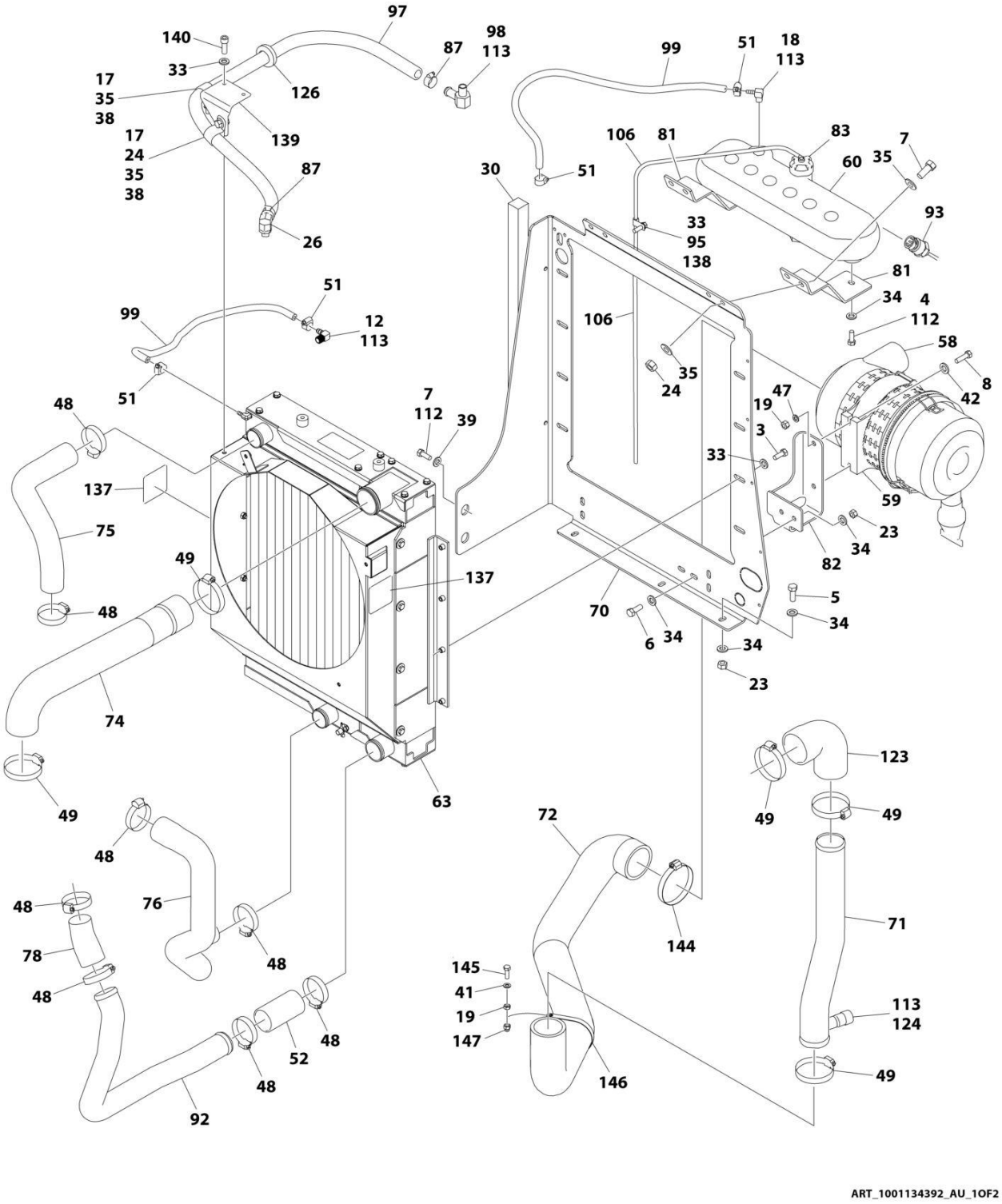

ART_1001134392_AU_1OF2

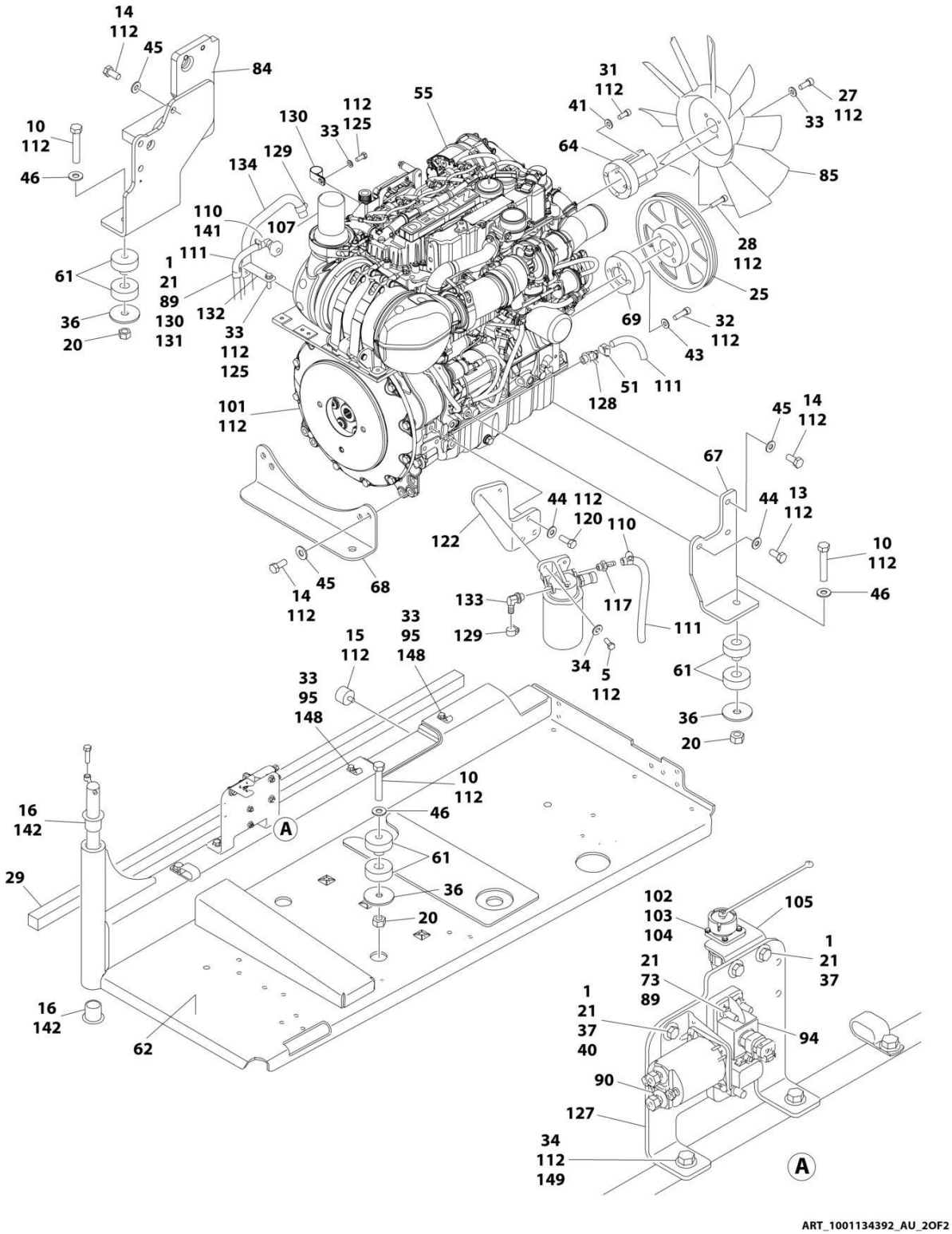

ART_1001134392_AU_2OF2

FIGURE 3-22. DEUTZ TCD2.9L4 ENGINE ASSEMBLY - WITH SAUER PUMP (WITHOUT COLD WEATHER PLUS PACKAGE)

ITEM	PART NUMBER	QTY	DESCRIPTION	REV
	1001134392	Ref	DEUTZ TCD2.9L4 ENGINE ASSEMBLY	AU
1	0641406	5	Bolt 1/4 x 3/4	
3	0641508	8	Bolt 5/16 x 1	
4	0641606	2	Bolt 3/8 x 3/4	
5	0641608	9	Bolt 3/8 x 1	
6	0641610	2	Bolt 3/8 x 1-1/4	
7	0641708	6	Bolt 7/16 x 1	
8	0700815	2	Bolt M8 x 35	
10	0682028	4	Bolt 5/8 x 3-1/2 Grade 8	
12	1001140564	1	Fitting, 90 Barbed	
13	0771212	1	Bolt M12 x 25 Grade 10.9	
14	0771414	9	Bolt M14 x 30 Grade 10.9	
15	0940070	1	Bumper	
16	0961986	2	Bushing, Flanged	
17	0641706	2	Bolt 7/16 x 3/4	
18	1001134488	1	Fitting, 90 Barbed	
19	3290801	3	Nut M8	
20	3272001	4	Nut 5/8 Grade 8	
21	3311405	6	Nut 1/4	
23	3311605	9	Nut 3/8	
24	3311705	5	Nut 7/16	
25	3580320	1	Pulley	
26	1001141719	1	Fitting, 90 Barbed	
27	3931512	4	Capscrew 5/16 x 3/4	
28	3931628	4	Capscrew 3/8 x 1-3/4	
29	3960543	1	Seal	
30	3960544	1	Seal	
31	4031914	4	Bolt M8 x 50	
32	4032014	4	Bolt M10 x 50	
33	4711500	19	Washer 5/16	
34	4711600	24	Washer 3/8	
35	4711700	10	Washer 7/16	
36	1001146219	4	Washer Special	
37	4751400	8	Washer 1/4	
38	8406302	2	Clamp	
39	4751700	2	Washer 7/16	
40	4791400	2	Starwasher 1/4	
41	4811900	5	Washer M8	
42	4811902	2	Washer M8	
43	4812000	4	Washer M10	
44	4812100	4	Washer M12	
45	4812200	9	Washer M14	
46	4892000	4	Washer 5/8	
47	4831900	2	Washer M8	
48	8405201	8	Clamp	
49	8405204	5	Clamp	
51	8410013	5	Clamp	
52	91563070	1	Coupling, Rubber	

ITEM	PART NUMBER	QTY	DESCRIPTION	REV
55	1001249964	1	Engine, Deutz TCD2.9L4 (See Separate Breakdown in this Section)	
58	1001133633	1	Air Cleaner Assembly	
58	70024190	1	Element, Air Filter	
59	1001133634	1	Clamp	
60	1001166393	1	Tank, Surge	
61	1001155575	4	Mount, Motor	
62	1001191272	1	Tray	
63	1001256864	1	Radiator	
64	1001135138	1	Spacer, Fan	
67	1001135560	1	Support, Engine	
68	1001135562	1	Support, Engine - Rear	
69	1001135679	1	Spacer, Pulley	
70	1001135680	1	Support, Radiator	
71	1001135901	1	Pipe, Air Intake	
72	1001264917	1	Pipe, Air Intake	
73	3931432	1	Capscrew 1/4 x 2	
74	1001264982	1	Pipe, Air Cleaner to Intake	
75	1001135924	1	Hose, Radiator (Upper)	
76	1001135926	1	Hose, Radiator (Lower)	
78	1001135943	1	Coupling, Rubber	
81	1001136626	2	Bracket	
82	1001136665	1	Bracket	
83	1001136834	1	Cap, Tank	
84	1001283008	1	Support, Engine	
85	1001137276	1	Fan	
87	8405007	2	Clamp	
89	4711400	3	Washer 1/4	
90	1001117308	1	Relay	
92	1001135913	1	Pipe, Turbo to Air Cleaner	
93	1001138827	1	Sensor, Coolant Level	
94	1001138228	1	Module, Power	
94	70023592	1	Fuse 20Amp (Switched Output)	
94	70023593	1	Fuse 30Amp (Battery Output)	
95	1001138253	5	Clamp	
96	1001138346	1	Harness, Engine (Not Shown - See Separate Breakdown in ELECTRICAL Section)	
97	1001138524	1	Hose	
98	1001138559	1	Fitting, 90	
99	2720015	4.5 ft/ 1.4m	Hose	
101	2902065	1	Pump Coupling Kit (See Separate Breakdown in this Section)	
102	3310401	3	Nut #4	
103	3910408	3	Screw #4 x 1/2	
104	4710400	3	Washer #4	
105	1001139240	1	Bracket	
106	1001138248	4 ft/ 1.2m	Tubing	
107	1001153024	1	Pipe, Exhaust	
110	1320022	2	Clamp	
111	1001165035	30.5 ft/ 9.3m	Hose	
112	0100011	AR	Compound, Locking	

SECTION 3 - ENGINE

ITEM	PART NUMBER	QTY	DESCRIPTION	REV
113	0100020	AR	Sealant	
114	1001141304	1	Wire, Glow Plug (Not Shown)	
115	1001135779	1	Cable, Alternator Positive (Not Shown)	
117	1001141717	1	Fitting, Straight	
120	0761214	3	Bolt M12 x 30	
122	1001142685	1	Bracket	
123	1001165820	1	Pipe, Elbow	
124	1001143390	1	Indicator, Air Filter Service	
125	0760810	2	Bolt M8 x 20	
126	1001144089	1	Grommet	
127	1001145154	1	Plate, Mounting	
128	4640751	1	Valve, Oil Drain	
129	8405006	2	Clamp	
130	8406102	AR	Clip	
131	8406112	1	Clip	
132	1001138717	1	Bracket	
133	1001142501	1	Fitting, 90 Barbed	
134	1001154405	5 ft/ 1.5m	Hose	
135	1001148843	1	Harness, Fuel Filter (Not Shown - See Separate Breakdown in ELECTRICAL Section)	
137	1703162	2	Decal - Fan	
138	0641503	1	Bolt 5/16 x 3/8	
139	1001153387	1	Plate	
140	3931508	2	Capscrew 5/16 x 1/2	
141	1001155823	1	Coupling	
142	0100062	AR	Adhesive, Loctite #680	
143	4240099	AR	Tie-Strap (Not Shown)	
144	8410011	1	Clamp	
145	0700812	1	Bolt M8 x 25	
146	1321289	1	Clamp	
147	3290806	1	Nut M8	
148	0641510	2	Bolt 5/16 x 1-1/4	
149	0641612	2	Bolt 3/8 x 1-1/2	

FIGURE 3-23. DEUTZ TCD2.9L4 ENGINE INSTALLATION - WITH SAUER PUMPS (WITH COLD WEATHER PLUS PACKAGE)

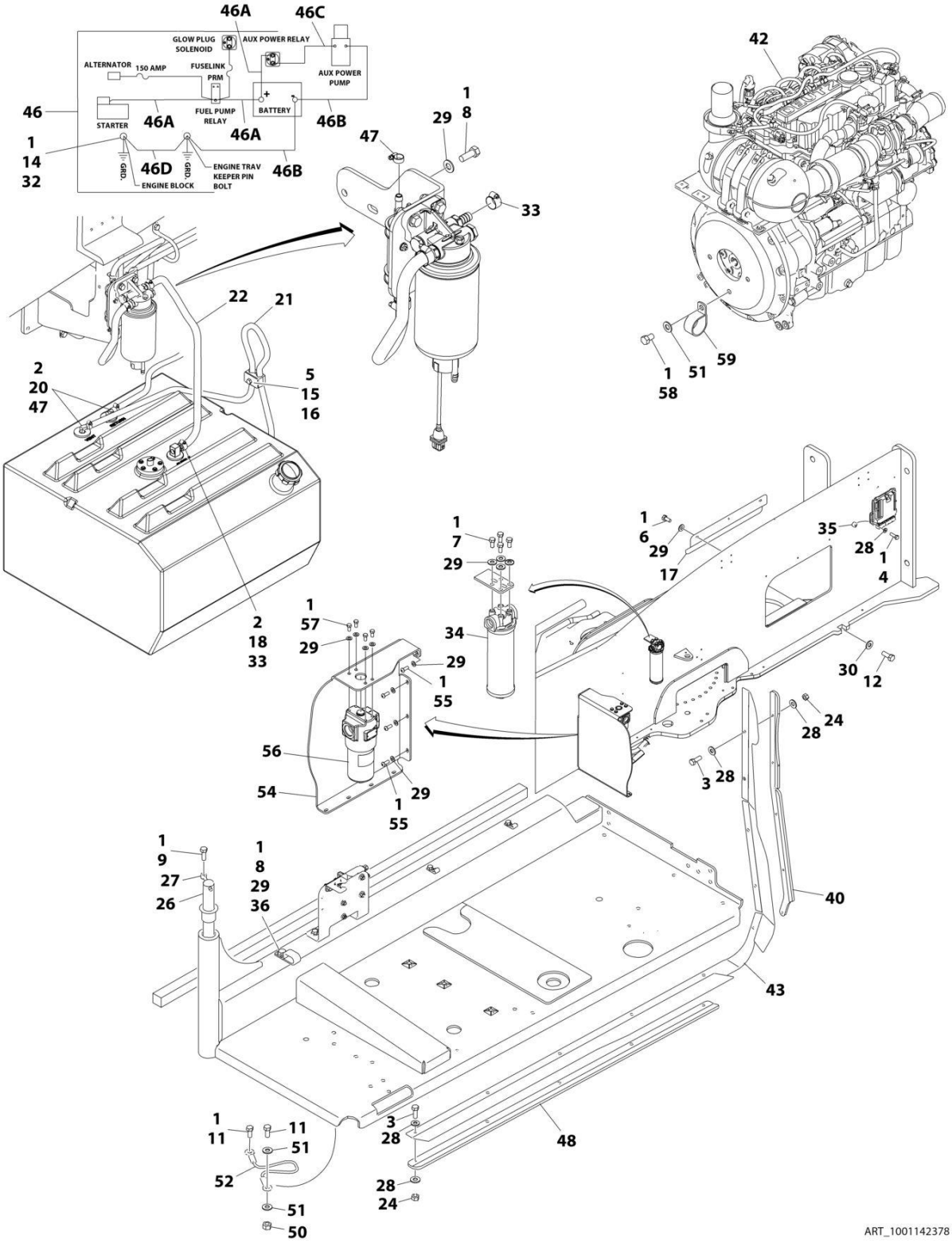

FIGURE 3-23. DEUTZ TCD2.9L4 ENGINE INSTALLATION - WITH SAUER PUMPS (WITH COLD WEATHER PLUS PACKAGE)

ITEM	PART NUMBER	QTY	DESCRIPTION	REV
	1001142378	Ref	DEUTZ TCD2.9L4 ENGINE INSTALLATION - WITH SAUER PUMPS (WITH COLD WEATHER PLUS PACKAGE)	M
1	0100011	AR	Compound, Locking	
2	0100079	AR	Sealant, Pipe	
3	0641408	10	Bolt 1/4 x 1	
4	0641410	4	Bolt 1/4 x 1-1/4	
5	0641511	1	Bolt 5/16 x 1-3/8	
6	0641605	3	Bolt 3/8 x 5/8	
7	0641606	4	Bolt 3/8 x 3/4	
8	0641608	3	Bolt 3/8 x 1	
9	0641610	1	Bolt 3/8 x 1-1/4	
11	0641808	AR	Bolt 1/2 x 1	
12	0642010	1	Bolt 5/8 x 1-1/4	
14	0761210	1	Bolt M12 x 20	
15	1320187	1	Clamp	
16	1320190	1	Cover, Clamp	
17	1671121	1	Cover	
18	2180832	1	Fitting, Barbed	
20	2220313	2	Fitting, 90 Barbed	
21	2750532	5 ft/ 1.5m	Hose	
22	1001154405	1.9 ft/ 0.6m	Hose	
24	3311405	10	Nut 1/4	
26	3422446	1	Pin, Pivot	
27	3841143	1	Pin, Keeper	
28	4711400	24	Washer 1/4	
29	4711600	19	Washer 3/8	
30	4752000	1	Washer 5/8	
32	4812100	1	Washer M12	
33	8405006	2	Clamp	
34	1001108617	1	Hydraulic Pressure Filter Assembly	
34	70002231	1	Element, Filter	
35	1001110425	4	Spacer	
36	1001116792	1	Clamp	
38	1001138491	NLA	Harness, Fuel (Use p/n 1001222665) (Not Shown - See Separate Breakdown in ELECTRICAL SECTION)	
40	1001145089	1	Clamp	
42	1001141745	1	Engine Sub-Assembly (See Separate Breakdown in this Section)	
43	1001145560	1	Panel, Rubber	
46	1001142610	1	Battery Cable Kit	C
46A	7027046	1	Cable, Battery (Red) (Battery + to Relays and Starter)	
46A	See Note	NSS	Boot, Ring Terminal (Red) (Note: Not Available - Purchase Locally)	
46B	7027047	1	Cable, Battery (Black) (Battery - to Tray Pivot Grd) and Aux Pump	
46B	See Note	NSS	Boot, Ring Terminal (Black) (Note: Not Available - Purchase Locally)	
46C	7027048	1	Cable (Red) (Aux Relay to Aux Pump)	
46C	See Note	NSS	Boot, Ring Terminal (Red) (Note: Not Available - Purchase Locally)	

SECTION 3 - ENGINE

ITEM	PART NUMBER	QTY	DESCRIPTION	REV
46D	7027049	1	Cable, Battery (Black) (Engine to Tray Pivot Grd)	
47	1320022	3	Clamp	
48	1001145842	1	Plate, Clamping	
50	3311805	1	Nut 1/2	
51	4711800	3	Washer 1/2	
52	1001131542	1	Lanyard	
54	3380723	1	Panel, Noise Reduction	
55	3900316	5	Screw 3/8 x 1	
56	2120218	1	Filter, High Pressure	
56	2120219	1	Element, Filter	
56	70001344	1	O-Ring, Bowl	
56	70006137	1	Seal Kit - Includes O-Ring (Element), O-Ring (Bowl), Back-up Ring (Bowl), Seal Ring (Indicator) and O-Ring (Indicator)	
57	0651606	4	Bolt 3/8 x 3/4	
58	0641806	1	Bolt 1/2 x 3/4	
59	90028660	1	Clamp	

FIGURE 3-24. DEUTZ TCD2.9L4 ENGINE SUB-ASSEMBLY - WITH SAUER PUMPS (WITH COLD WEATHER PLUS PACKAGE)

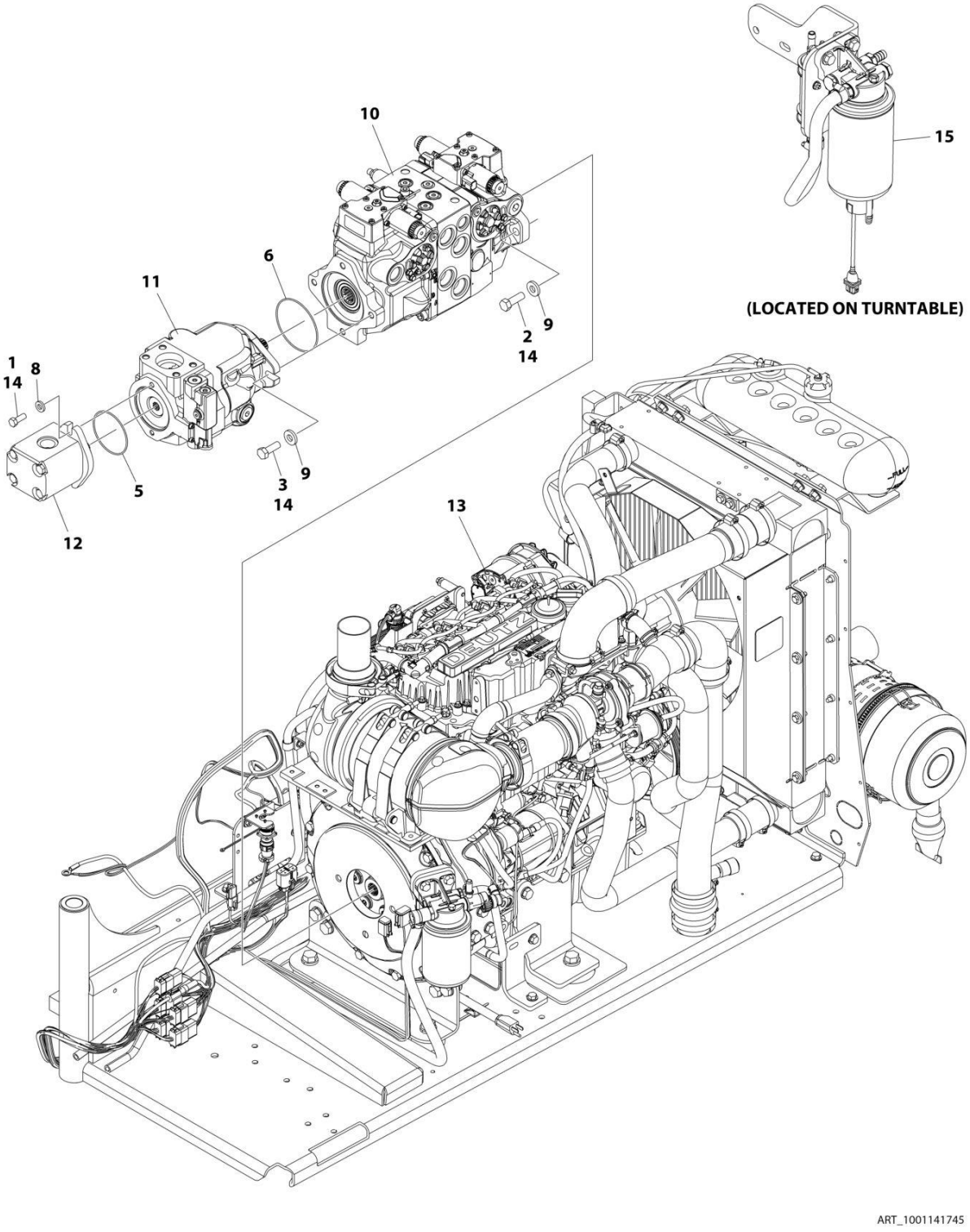

FIGURE 3-24. DEUTZ TCD2.9L4 ENGINE SUB-ASSEMBLY - WITH SAUER PUMPS (WITH COLD WEATHER PLUS PACKAGE)

ITEM	PART NUMBER	QTY	DESCRIPTION	REV
	1001141745	Ref	DEUTZ TCD2.9L4 ENGINE SUB-ASSEMBLY	AL
1	0641608	2	Bolt 3/8 x 1	
2	0641812	2	Bolt 1/2 x 1-1/2	
2	0641814	2	Bolt 1/2 x 1-3/4	
3	0761215	2	Bolt M12 x 35	
5	3790152	1	O-Ring	
6	3790155	1	O-Ring	
8	4891600	2	Washer 3/8	
9	4891800	4	Washer 1/2	
10	1001108616	1	Pump Assembly - Sauer Tandem (See Separate Breakdown in this Section)	
11	1001171095	1	Pump Assembly - Sauer Piston (See Separate Breakdown in this Section)	
12	1001112927	1	Pump Assembly - Sauer Gear (See Separate Breakdown in this Section)	
13	1001141746	1	Engine Assembly (See Separate Breakdown in this Section)	
14	0100011	AR	Compound, Locking	
15	1001165101	1	Bracket, Fuel Pump Filter Assembly (See Separate Breakdown in this Section)	

FIGURE 3-25. DEUTZ TCD2.9L4 ENGINE ASSEMBLY - WITH SAUER PUMPS (WITH COLD WEATHER PLUS PACKAGE)

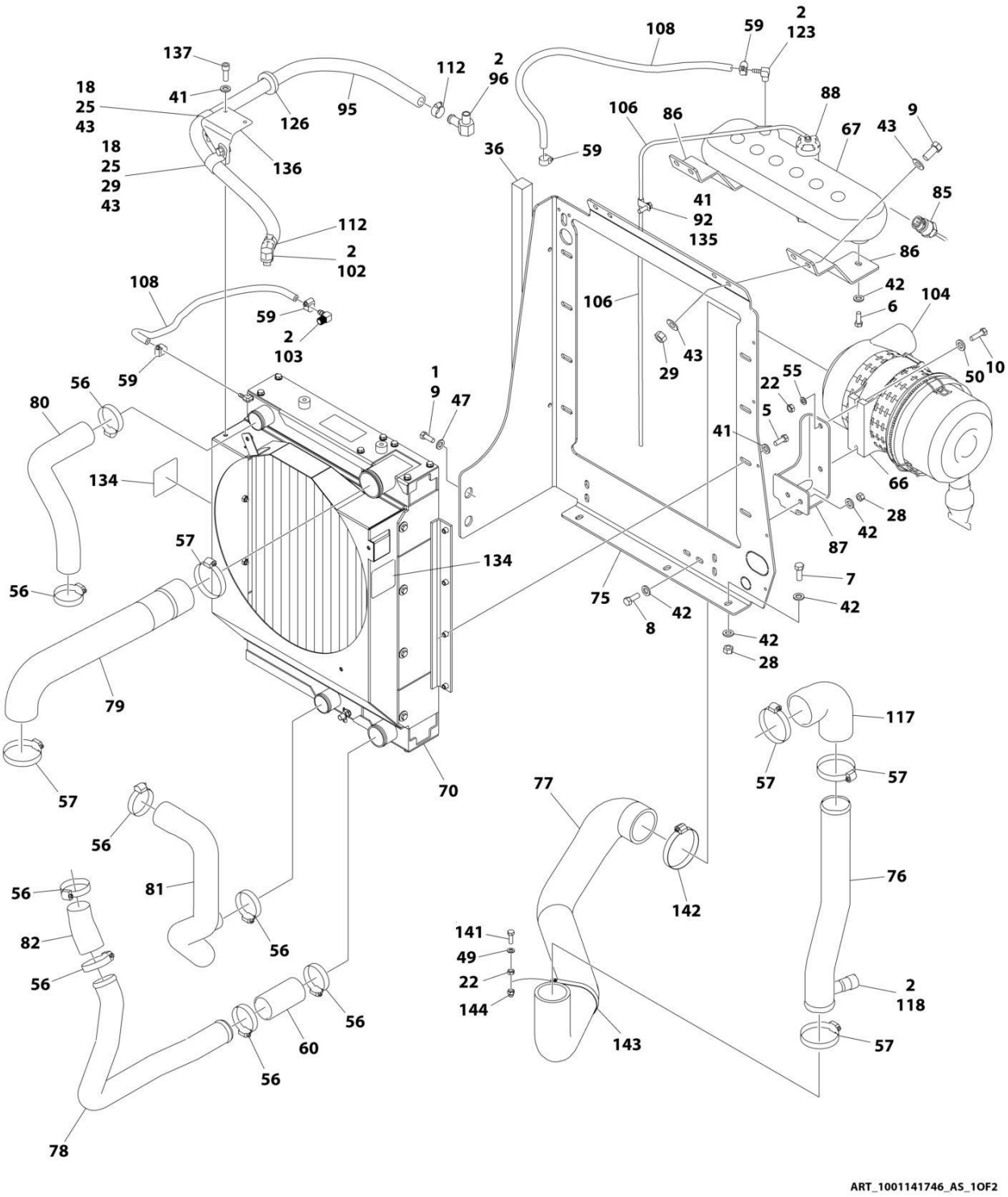

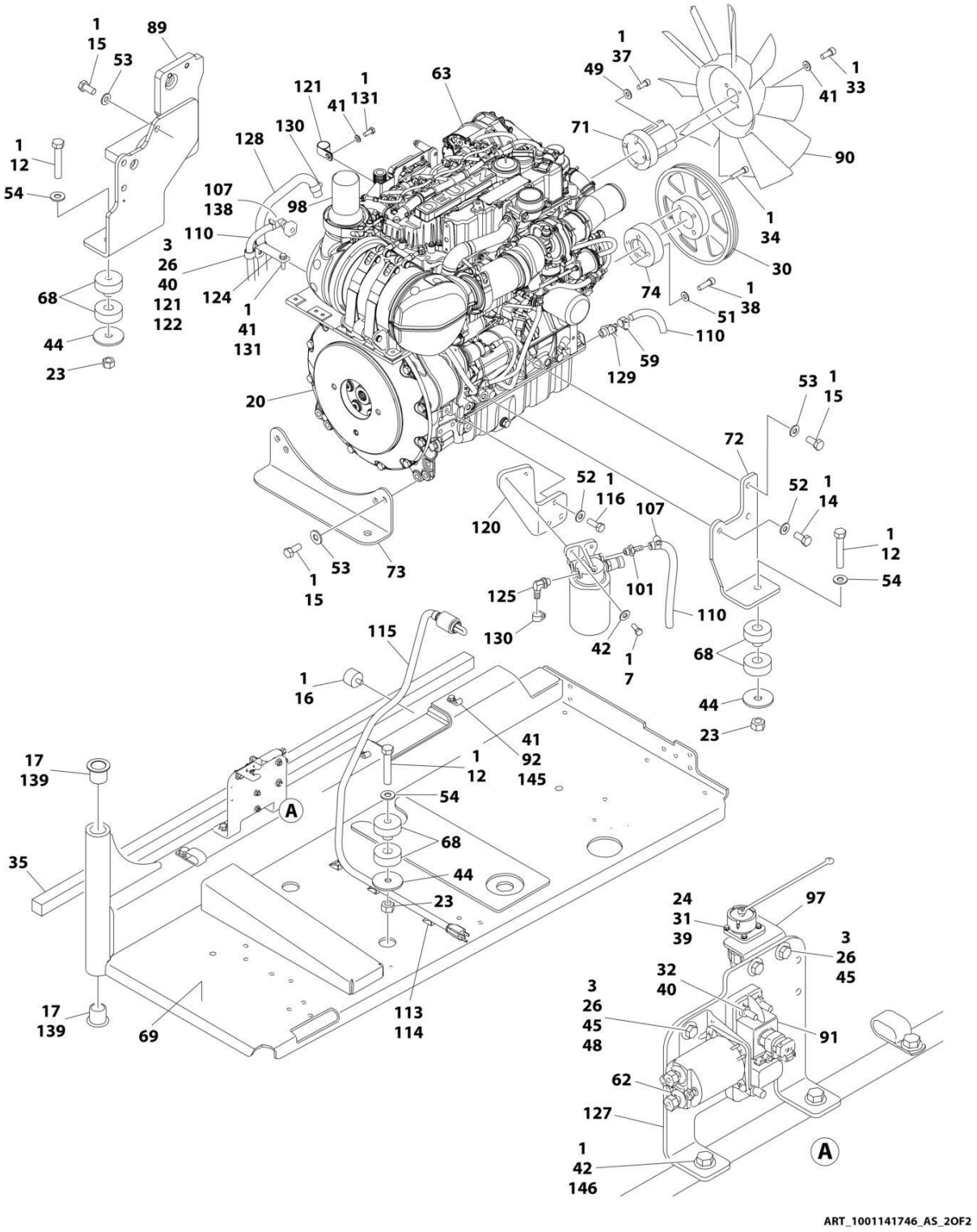
ART_1001141746_AS_2OF2

FIGURE 3-25. DEUTZ TCD2.9L4 ENGINE ASSEMBLY - WITH SAUER PUMPS (WITH COLD WEATHER PLUS PACKAGE)

ITEM	PART NUMBER	QTY	DESCRIPTION	REV
	1001141746	Ref	DEUTZ TCD2.9L4 ENGINE ASSEMBLY	AS
1	0100011	AR	Compound, Locking	
2	0100020	AR	Sealant	
3	0641406	5	Bolt 1/4 x 3/4	
5	0641508	8	Bolt 5/16 x 1	
6	0641606	2	Bolt 3/8 x 3/4	
7	0641608	9	Bolt 3/8 x 1	
8	0641610	2	Bolt 3/8 x 1-1/4	
9	0641708	6	Bolt 7/16 x 1	
10	0700815	2	Bolt M8 x 35	
12	0682028	4	Bolt 5/8 x 3-1/2 Grade 8	
14	0771212	1	Bolt M12 x 25 Grade 10.9	
15	0771414	9	Bolt M14 x 30 Grade 10.9	
16	0940070	1	Bumper	
17	0961986	2	Bushing, Flanged	
18	0641706	2	Bolt 7/16 x 3/4	
20	2902065	1	Pump Coupling Kit (See Separate Breakdown in this Section)	
22	3290801	3	Nut M8	
23	3272001	4	Nut 5/8 Grade 8	
24	3310401	3	Nut #4	
25	8406302	2	Clamp	
26	3311405	6	Nut 1/4	
28	3311605	9	Nut 3/8	
29	3311705	5	Nut 7/16	
30	3580320	1	Pulley	
31	3910408	3	Screw #4 x 1/2	
32	3931432	1	Capscrew 1/4 x 2	
33	3931512	4	Capscrew 5/16 x 3/4	
34	3931628	4	Capscrew 3/8 x 1-3/4	
35	3960543	1	Seal	
36	3960544	1	Seal	
37	4031914	4	Bolt M8 x 50	
38	4032014	4	Bolt M10 x 50	
39	4710400	3	Washer #4	
40	4711400	3	Washer 1/4	
41	4711500	19	Washer 5/16	
42	4711600	24	Washer 3/8	
43	4711700	10	Washer 7/16	
44	1001146219	4	Washer Special	
45	4751400	8	Washer 1/4	
47	4751700	2	Washer 7/16	
48	4791400	2	Starwasher 1/4	
49	4811900	5	Washer M8	
50	4811902	2	Washer M8	
51	4812000	4	Washer M10	
52	4812100	4	Washer M12	
53	4812200	9	Washer M14	
54	4892000	4	Washer 5/8	
55	4831900	2	Washer M8	

ITEM	PART NUMBER	QTY	DESCRIPTION	REV
56	8405201	8	Clamp	
57	8405204	5	Clamp	
59	8410013	5	Clamp	
60	91563070	1	Coupling, Rubber	
62	1001117308	1	Relay	
63	1001249964	1	Engine, Deutz TCD2.9L4 (See Separate Breakdown in this Section)	
66	1001133634	1	Clamp	
67	1001166393	1	Tank, Surge	
68	1001155575	4	Mount, Motor	
69	1001191272	1	Tray	
70	1001256864	1	Radiator	
71	1001135138	1	Spacer, Fan	
72	1001135560	1	Support, Engine	
73	1001135562	1	Support, Engine - Rear	
74	1001135679	1	Spacer, Pulley	
75	1001135680	1	Support, Radiator	
76	1001135901	1	Pipe, Air Intake	
77	1001264917	1	Hose, Air Intake	
78	1001135913	1	Pipe, Turbo to Air Cleaner	
79	1001264982	1	Hose, Air Cleaner to Intake	
80	1001135924	1	Hose, Radiator (Upper)	
81	1001135926	1	Hose, Radiator (Lower)	
82	1001135943	1	Coupling, Rubber	
85	1001138827	1	Sensor, Coolant Level	
86	1001136626	2	Bracket	
87	1001136665	1	Bracket	
88	1001136834	1	Cap, Tank	
89	1001283008	1	Support, Engine	
90	1001137276	1	Fan	
91	1001138228	1	Module, Power	
91	70023592	1	Fuse 20Amp (Switched Output)	
91	70023593	1	Fuse 30Amp (Battery Output)	
92	1001138253	5	Clamp	
94	1001138346	1	Harness, Engine (Not Shown - See Separate Breakdown in ELECTRICAL Section)	
95	1001138524	1	Hose	
96	1001138559	1	Fitting, 90	
97	1001139240	1	Bracket	
98	1001153024	1	Pipe, Exhaust	
100	1001141304	1	Wire, Glow Plug (Not Shown)	
101	1001141717	1	Fitting, Straight	
102	1001141719	1	Fitting, 90 Barbed	
103	1001140564	1	Fitting, 90 Barbed	
104	1001133633	1	Air Cleaner Assembly	
104	70024190	1	Element, Air Filter	
105	1001135779	1	Cable, Alternator Positive (Not Shown)	
106	1001138248	4 ft/ 1.2m	Tubing	
107	1320022	2	Clamp	
108	2720015	4.5 ft/ 1.4m	Hose	

SECTION 3 - ENGINE

ITEM	PART NUMBER	QTY	DESCRIPTION	REV
110	1001165035	30.5 ft/ 9.3m	Hose	
112	8405007	2	Clamp	
113	4240099	AR	Tie-Strap (Used to Secure Block Heater Cord)	
114	4460234	3	Mount, Wire Tie (Used to Secure Block Heater Cord)	
115	1001140312	1	Heater, Block	
116	0761214	3	Bolt M12 x 30	
117	1001165820	1	Pipe, Elbow	
118	1001143390	1	Indicator, Air Filter Service	
120	1001142685	1	Bracket	
121	8406102	AR	Clip	
122	8406112	1	Clip	
123	1001134488	1	Fitting, 90 Barbed	
124	1001138717	1	Bracket	
125	1001142501	1	Fitting, 90 Barbed	
126	1001144089	1	Grommet	
127	1001145154	1	Plate, Mounting	
128	1001154405	5 ft/ 1.5m	Hose	
129	4640751	1	Valve, Oil Drain	
130	8405006	2	Clamp	
131	0760810	AR	Bolt M8 x 20	
132	1001148843	1	Harness, Fuel Filter (Not Shown - See Separate Breakdown in ELECTRICAL Section)	
134	1703162	2	Decal - Fan	
135	0641503	1	Bolt 5/16 x 3/8	
136	1001153387	1	Plate	
137	3931508	2	Capscrew 5/16 x 1/2	
138	1001155823	1	Coupling	
139	0100062	AR	Adhesive, Loctite #680	
140	1001181895	AR	Adhesive, Loctite #640 (Not Shown - Apply to Block Heater)	
141	0700812	1	Bolt M8 x 25	
142	8410011	1	Clamp	
143	1321289	1	Clamp	
144	3290806	1	Nut M8	
145	0641510	2	Bolt 5/16 x 1-1/4	
146	0641612	2	Bolt 3/8 x 1-1/2	

FIGURE 3-26. DEUTZ TCD2.9L4 ENGINE COMPONENTS

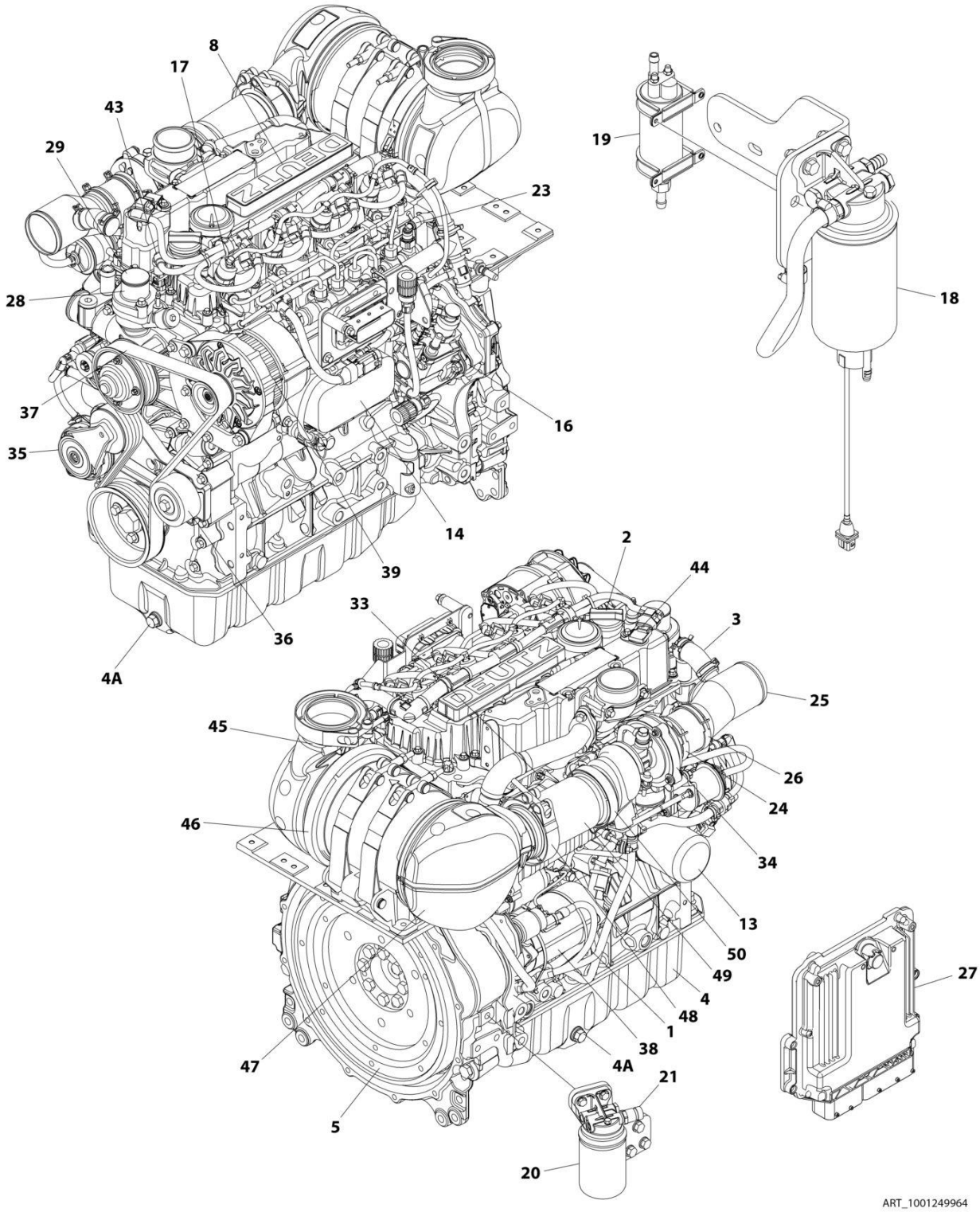

FIGURE 3-26. DEUTZ TCD2.9L4 ENGINE COMPONENTS

ITEM	PART NUMBER	QTY	DESCRIPTION	REV
	1001249964	Ref	DEUTZ TCD2.9L4 ENGINE COMPONENTS	A
1	70024904	1	Dipstick	
1	70024905	1	O-Ring	
2	7020465	2	Cap, Filler	
3	7002511	2	Clamp	
4		Ref	Pan, Oil	
4A	70005941	2	Plug	
4A	70005942	2	Washer, Sealing	
5	70001870	1	Flywheel	
5	7024579	1	Gear, Ring	
6	70024906	1	Gasket, Head (Not Shown)	
8	70005921	1	Cover, Valve	
8	70005171	1	Gasket	
8	70025205	1	Gasket, Small Valve Cover	
10	70004280	1	Seal, Shaft - Front (Not Shown)	
11	70002718	1	Seal, Shaft - Rear (Not Shown)	
12	70005172	1	Pump, Oil Lube (Not Shown)	
12	70025135	1	O-Ring	
12	70025136	1	Gasket	
13	7016331	1	Filter, Oil	
13	70025137	1	Bushing	
14	70024494	1	Cooler, Engine Oil	
14	70024925	1	Gasket	
16	70024924	1	Pump, Fuel	
16	70025152	1	O-Ring	
16	70004505	1	Valve, Overflow	
16	70004506	1	O-Ring	
16	70004507	1	O-Ring	
16	70004508	1	Valve Volume Control	
16	70004509	1	O-Ring	
16	70004510	1	Gasket	
17	70025181	4	Injector, Fuel	
17	70025140	4	Washer, Sealing	
17	70025146	4	Clamp (Top of Injector)	
17	70025145	4	O-Ring	
17	70025154	4	Shoe, Clamping	
17	70000345	1	Plug, Glow (Not Shown)	
18	70024961	1	Fuel Filter Assembly	
18	1001225430	1	Filter, Fuel	
18	70024513	1	Cable, Sensor	
18	70025239	1	Ring, Sealing	
19	70006144	1	Pump, Fuel	
19	70025144	2	Clamp	
20	70029451	1	Filter with Head	
20	1001225431	1	Filter, Fuel	
21	70024919	1	Sensor, Pressure	
21	70024920	1	O-Ring	
22	70025151	1	Rail, Fuel (Not Shown)	
22	70025235	1	Repair Kit (Not Shown)	
23	70025182	1	Fuel Line - High Pressure (Cylinder 1 & 2)	

SECTION 3 - ENGINE

ITEM	PART NUMBER	QTY	DESCRIPTION	REV
23	70025183	1	Fuel Line - High Pressure (Cylinder 3 & 4)	
23	70025184	1	Fuel Line - High Pressure (Supply)	
24	70004501	1	Sleeve, Rubber	
25	70004502	1	Pipe, Intake	
25	70005926	1	Pipe, Elbow	
26	70025112	2	Clamp	
27	70025210	1	ECU (Engine Control Unit)	
28	70029797	1	Pump, Water	
28	70025200	1	Ring, Sealing	
28	70007325	1	Gasket	
28	7020492	2	Ring, Sealing (Plug)	
29	70005929	1	Thermostat	
29	70025184	1	O-Ring (Thermostat to Cover)	
29	70005931	1	Gasket (Thermostat to Pump)	
29	70025142	1	Cover, Thermostat	
31	70007326	1	Valve, Shuttle (EGR) (Not Shown)	
31	70007327	1	Gasket	
33	70004282	1	Manifold, Exhaust	
33	70025164	1	Gasket, Exhaust Manifold to Head	
33	70029557	1	Gasket, Exhaust Manifold to Pipe	
34	70007328	1	Turbocharger	
34	70024912	1	Gasket, Exhaust Manifold	
35	70028699	1	Tensioner, Belt	
36		Ref	Idler Roller	
37	70004277	1	Belt, Drive	
38	70024915	1	Starter	
38	70005647	1	Switch, Solenoid	
38	70005648	1	Relay	
39	70029401	1	Generator	
39	70006653	1	Regulator, Voltage	
40	70007329	1	Harness, Engine (Not Shown)	
41	70024504	1	Sensor, Pressure (Not Shown - Located Top Rear)	
41	70024920	1	O-Ring	
42	70026210	2	Sensor, Speed (Not Shown - Located Left Side Front and Flywheel Housing)	
42	70024917	2	O-Ring	
43	70028540	1	Sender, Temperature	
44	70024507	1	Sensor, Pressure	
44	70025120	1	O-Ring	
45	70007331	1	Outlet, Muffler	
46	70029517	1	Clip	
46	70029520	1	Gasket	
47	70007330	1	Inlet	
48	70025877	1	Clip	
48	70025788	1	Nut	
48	70025242	1	Gasket	
49	70004504	1	Compensator	
50	70005527	1	Clip	
50	70029433	1	Clip	
50	70025242	1	Gasket	

FIGURE 3-27. DEUTZ TCD2.9L4 (STAGE V) ENGINE INSTALLATION - WITH REXROTH PUMP (WITHOUT COLD WEATHER PLUS PACKAGE)

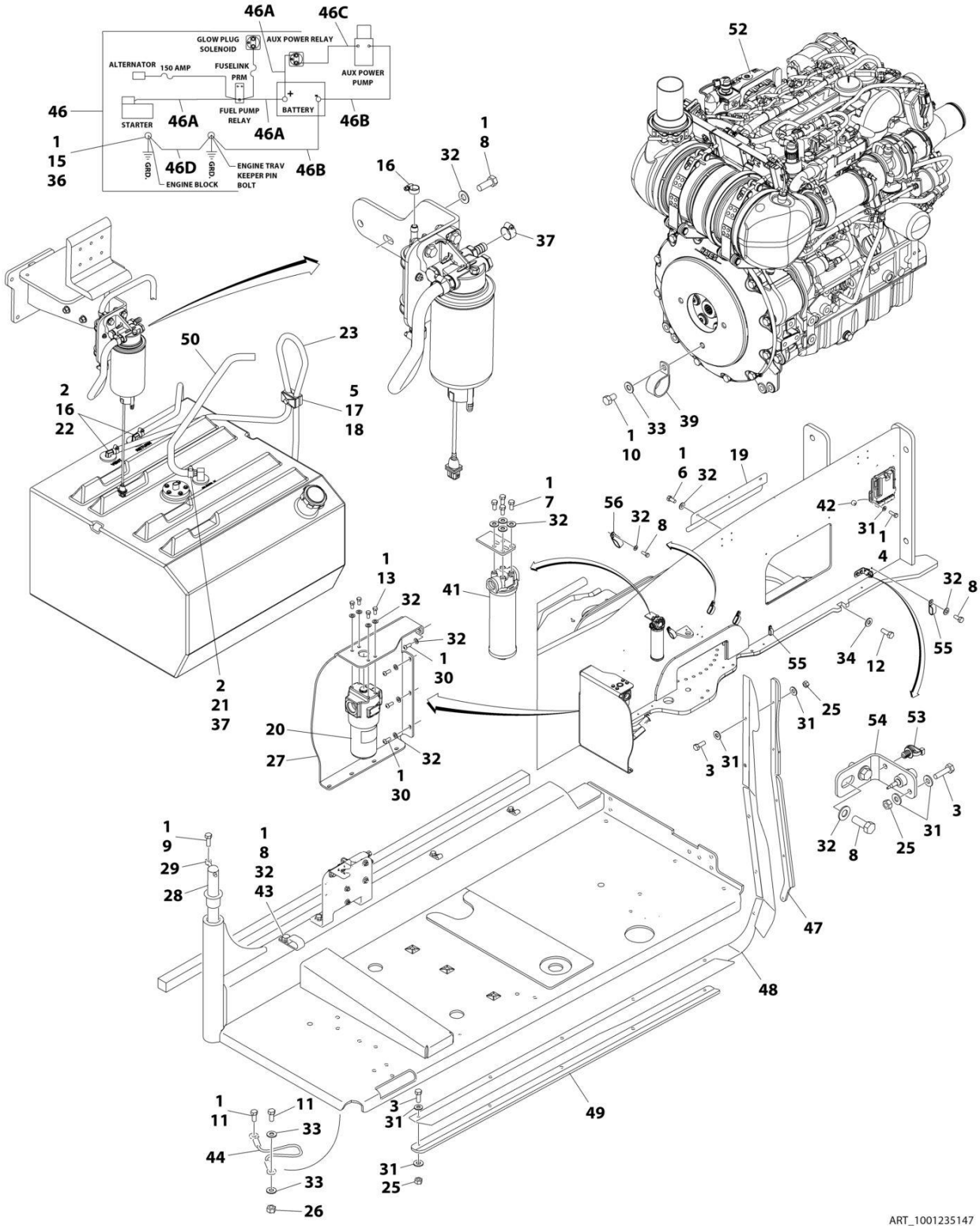

FIGURE 3-27. DEUTZ TCD2.9L4 (STAGE V) ENGINE INSTALLATION - WITH REXROTH PUMP (WITHOUT COLD WEATHER PLUS PACKAGE)

ITEM	PART NUMBER	QTY	DESCRIPTION	REV
	1001235147	Ref	DEUTZ TCD2.9L4 (STAGE V) ENGINE INSTALLATION - WITH REXROTH PUMP (WITHOUT COLD WEATHER PLUS PACKAGE)	F
1	0100011	AR	Compound, Locking	
2	0100079	AR	Sealant, Pipe	
3	0641408	11	Bolt 1/4 x 1	
4	0641410	4	Bolt 1/4 x 1-1/4	
5	0641511	1	Bolt 5/16 x 1-3/8	
6	0641605	3	Bolt 3/8 x 5/8	
7	0641606	4	Bolt 3/8 x 3/4	
8	0641608	10	Bolt 3/8 x 1	
9	0641610	1	Bolt 3/8 x 1-1/4	
10	0641806	1	Bolt 1/2 x 3/4	
11	0641808	2	Bolt 1/2 x 1	
12	0642010	1	Bolt 5/8 x 1-1/4	
13	0651606	4	Bolt 3/8 x 3/4	
15	0761210	1	Bolt M12 x 20	
16	1320022	3	Clamp	
17	1320187	1	Clamp	
18	1320190	1	Cover, Clamp	
19	1671121	1	Cover	
20	2120218	1	Filter, High Pressure	
20	2120219	1	Element, Filter	
20	70001344	1	O-Ring, Bowl	
20	70006137	1	Seal Kit - Includes O-Ring (Element), O-Ring (Bowl), Back-up Ring (Bowl), Seal Ring (Indicator) and O-Ring (Indicator)	
21	2180832	1	Fitting, Barbed	
22	2220313	2	Fitting, 90 Barbed	
23	2750532	5 ft/1.5m	Hose	
25	3311405	11	Nut 1/4	
26	3311805	1	Nut 1/2	
27	3380723	1	Panel, Noise Reduction	
28	3422446	1	Pin, Pivot	
29	3841143	1	Pin, Keeper	
30	3900316	5	Screw 3/8 x 1	
31	4711400	26	Washer 1/4	
32	4711600	26	Washer 3/8	
33	4711800	3	Washer 1/2	
34	4752000	1	Washer 5/8	
36	4812100	1	Washer M12	
37	8405006	2	Clamp	
39	90028660	1	Clamp	
41	1001108617	1	Hydraulic Pressure Filter Assembly	
41	70002231	1	Element, Filter	
42	1001110425	4	Spacer	
43	1001116792	1	Clamp	
44	1001131542	1	Lanyard	
45	1001138491	NLA	Harness, Fuel (Use p/n 1001222665) (Not Shown - See Separate Breakdown in ELECTRICAL Section)	
46	1001142610	1	Battery Cable Kit	

SECTION 3 - ENGINE

ITEM	PART NUMBER	QTY	DESCRIPTION	REV
46A	7027046	1	Cable, Battery (Red) (Battery + to Relays and Starter)	
46A	See Note	NSS	Boot, Ring Terminal (Red) (Note: Not Available - Purchase Locally)	
46B	7027047	1	Cable, Battery (Black) (Battery - to Tray Pivot Grd) and Aux Pump	
46B	See Note	NSS	Boot, Ring Terminal (Black) (Note: Not Available - Purchase Locally)	
46C	7027048	1	Cable (Red) (Aux Relay to Aux Pump)	
46C	See Note	NSS	Boot, Ring Terminal (Red) (Note: Not Available - Purchase Locally)	
46D	7027049	1	Cable, Battery (Black) (Engine to Tray Pivot Grd)	
47	1001145089	1	Clamp	
48	1001145560	1	Panel, Rubber	
49	1001145842	1	Plate, Clamping	
50	1001154405	1.9 ft /0.6m	Hose	
52	1001235149	1	Engine Sub-Assembly (See Separate Breakdown in this Section)	
53	1001146588	1	Strap	
54	1001256879	1	Bracket	
55	1321283	2	Clamp	
56	1321716	3	Clamp	
57	4240099	AR	Tie-Strap (Not Shown)	

FIGURE 3-28. DEUTZ TCD2.9L4 (STAGE V) ENGINE SUB-ASSEMBLY - WITH REXROTH PUMP AND ABS HOODS (WITHOUT COLD WEATHER PLUS PACKAGE)

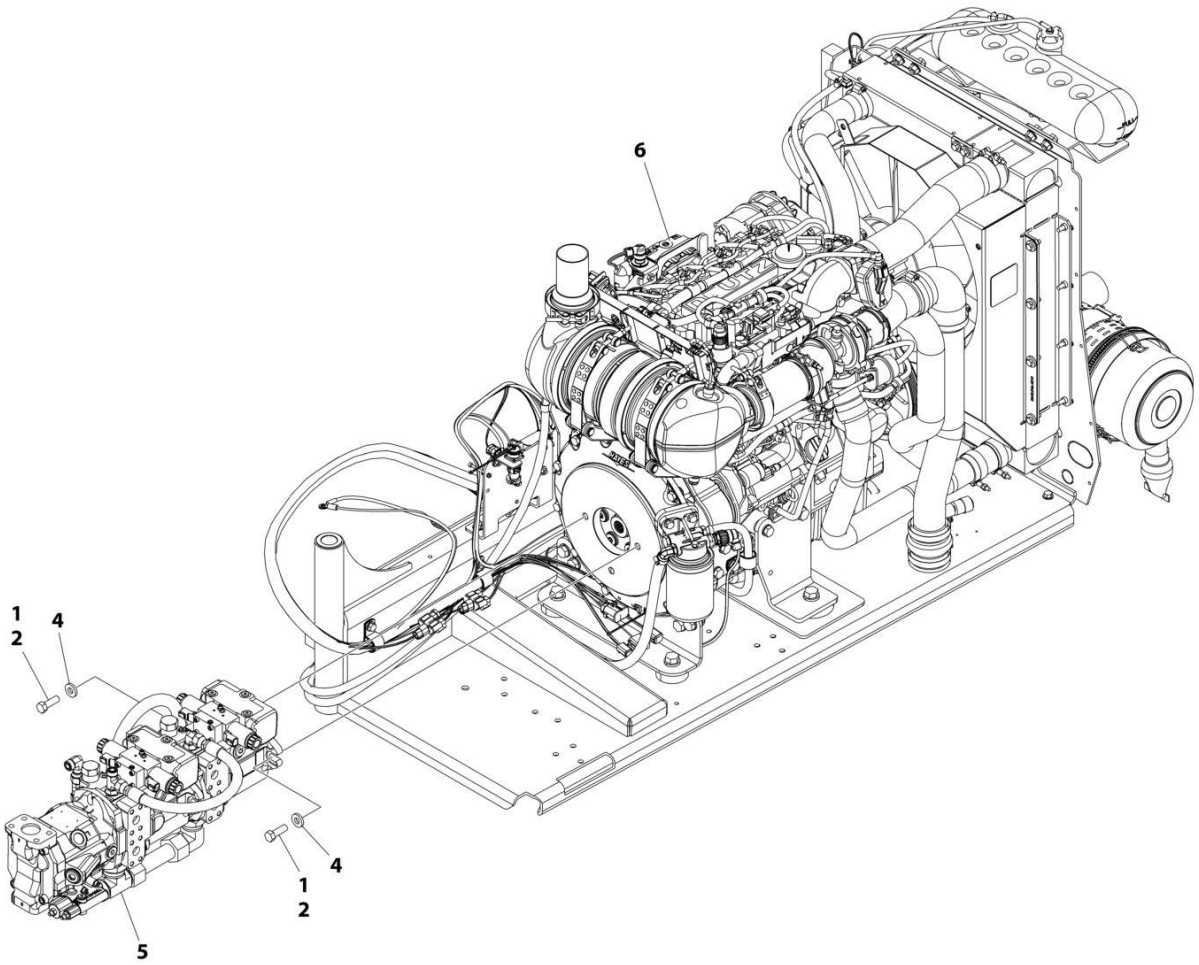

FIGURE 3-28. DEUTZ TCD2.9L4 (STAGE V) ENGINE SUB-ASSEMBLY - WITH REXROTH PUMP AND ABS HOODS (WITHOUT COLD WEATHER PLUS PACKAGE)

ITEM	PART NUMBER	QTY	DESCRIPTION	REV
	1001235149	Ref	DEUTZ TCD2.9L4 (STAGE V) ENGINE SUB-ASSEMBLY	Q
1	0100011	AR	Compound, Locking	
2	0641812	2	Bolt 1/2 x 1-1/2	
2	0641814	2	Bolt 1/2 x 1-3/4	
4	4891800	2	Washer 1/2	
5	1001152963	1	Pump Assembly - Rexroth (See Separate Breakdown in this Section)	
6	1001235151	1	Engine Assembly (See Separate Breakdown in this Section)	

SECTION 3 - ENGINE

FIGURE 3-29. DEUTZ TCD2.9L4 (STAGE V) ENGINE INSTALLATION - WITH SAUER PUMP (WITHOUT COLD WEATHER PLUS PACKAGE)

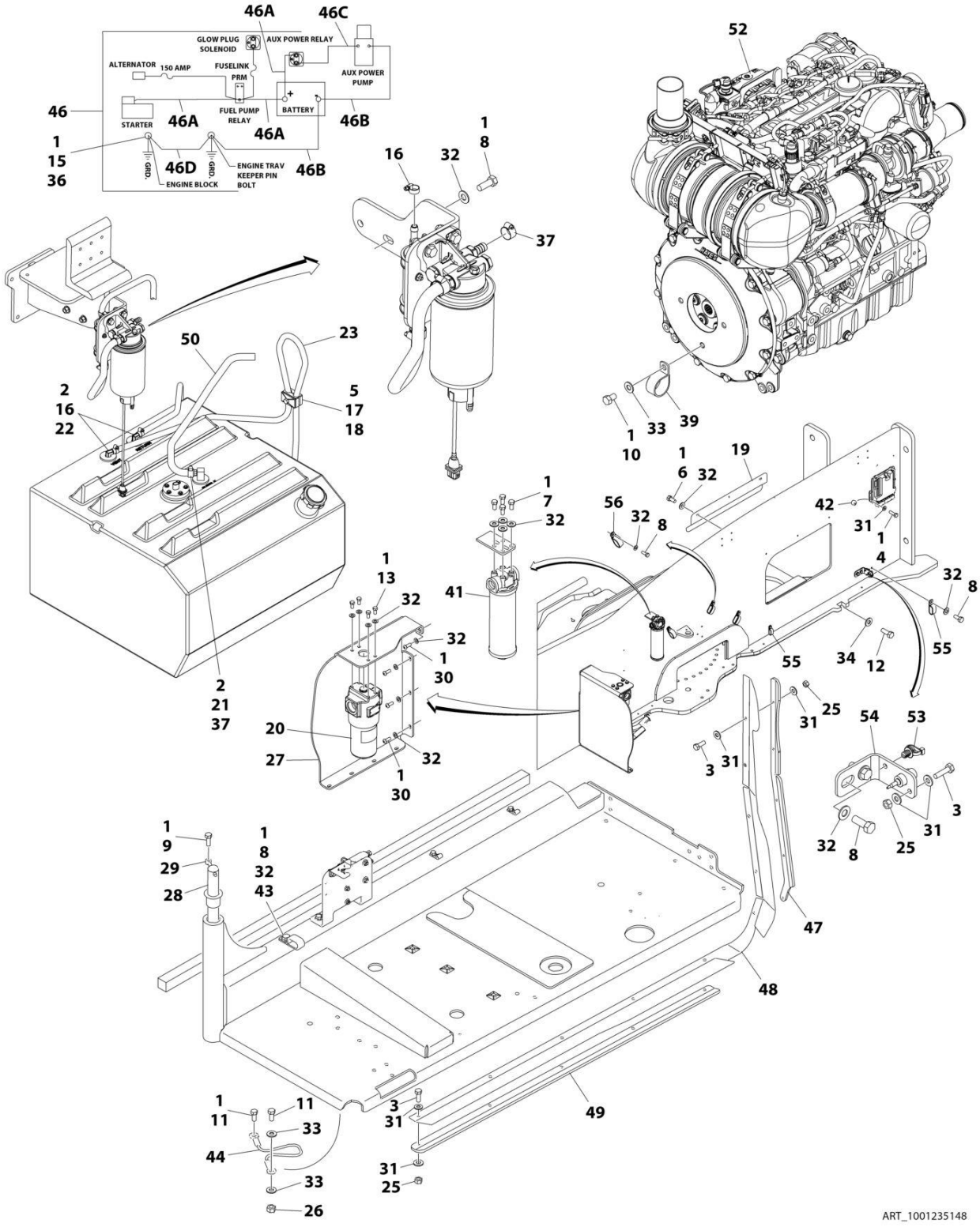

FIGURE 3-29. DEUTZ TCD2.9L4 (STAGE V) ENGINE INSTALLATION - WITH SAUER PUMP (WITHOUT COLD WEATHER PLUS PACKAGE)

ITEM	PART NUMBER	QTY	DESCRIPTION	REV
	1001235148	Ref	DEUTZ TCD2.9L4 (STAGE V) ENGINE INSTALLATION - WITH SAUER PUMP (WITHOUT COLD WEATHER PLUS PACKAGE)	F
1	0100011	AR	Compound, Locking	
2	0100079	AR	Sealant, Pipe	
3	0641408	11	Bolt 1/4 x 1	
4	0641410	4	Bolt 1/4 x 1-1/4	
5	0641511	1	Bolt 5/16 x 1-3/8	
6	0641605	3	Bolt 3/8 x 5/8	
7	0641606	4	Bolt 3/8 x 3/4	
8	0641608	10	Bolt 3/8 x 1	
9	0641610	1	Bolt 3/8 x 1-1/4	
10	0641806	1	Bolt 1/2 x 3/4	
11	0641808	2	Bolt 1/2 x 1	
12	0642010	1	Bolt 5/8 x 1-1/4	
13	0651606	4	Bolt 3/8 x 3/4	
15	0761210	1	Bolt M12 x 20	
16	1320022	3	Clamp	
17	1320187	1	Clamp	
18	1320190	1	Cover, Clamp	
19	1671121	1	Cover	
20	2120218	1	Filter, High Pressure	
20	2120219	1	Element, Filter	
20	70001344	1	O-Ring, Bowl	
20	70006137	1	Seal Kit - Includes O-Ring (Element), O-Ring (Bowl), Back-up Ring (Bowl), Seal Ring (Indicator) and O-Ring (Indicator)	
21	2180832	1	Fitting, Barbed	
22	2220313	2	Fitting, 90 Barbed	
23	2750532	5 ft /1.5m	Hose	
25	3311405	11	Nut 1/4	
26	3311805	1	Nut 1/2	
27	3380723	1	Panel, Noise Reduction	
28	3422446	1	Pin, Pivot	
29	3841143	1	Pin, Keeper	
30	3900316	5	Screw 3/8 x 1	
31	4711400	26	Washer 1/4	
32	4711600	26	Washer 3/8	
33	4711800	3	Washer 1/2	
34	4752000	1	Washer 5/8	
36	4812100	1	Washer M12	
37	8405006	2	Clamp	
39	90028660	1	Clamp	
41	1001108617	1	Hydraulic Pressure Filter Assembly	
41	70002231	1	Element, Filter	
42	1001110425	4	Spacer	
43	1001116792	1	Clamp	
44	1001131542	1	Lanyard	
45	1001138491	NLA	Harness, Fuel (Use p/n 1001222665) (Not Shown - See Separate Breakdown in ELECTRICAL SECTION)	
46	1001142610	1	Battery Cable Kit	

SECTION 3 - ENGINE

ITEM	PART NUMBER	QTY	DESCRIPTION	REV
46A	7027046	1	Cable, Battery (Red) (Battery + to Relays and Starter)	
46A	See Note	NSS	Boot, Ring Terminal (Red) (Note: Not Available - Purchase Locally)	
46B	7027047	1	Cable, Battery (Black) (Battery - to Tray Pivot Grd) and Aux Pump	
46B	See Note	NSS	Boot, Ring Terminal (Black) (Note: Not Available - Purchase Locally)	
46C	7027048	1	Cable (Red) (Aux Relay to Aux Pump)	
46C	See Note	NSS	Boot, Ring Terminal (Red) (Note: Not Available - Purchase Locally)	
46D	7027049	1	Cable, Battery (Black) (Engine to Tray Pivot Grd)	
47	1001145089	1	Clamp	
48	1001145560	1	Panel, Rubber	
49	1001145842	1	Plate, Clamping	
50	1001154405	1.9 ft /0.6m	Hose	
52	1001235150	1	Engine Sub-Assembly (See Separate Breakdown in this Section)	
53	1001146588	1	Strap	
54	1001256879	1	Bracket	
55	1321283	2	Clamp	
56	1321716	3	Clamp	
57	4240099	AR	Tie-Strap (Not Shown)	

FIGURE 3-30. DEUTZ TCD2.9L4 (STAGE V) ENGINE SUB-ASSEMBLY - WITH SAUER PUMP AND ABS HOODS (WITHOUT COLD WEATHER PLUS PACKAGE)

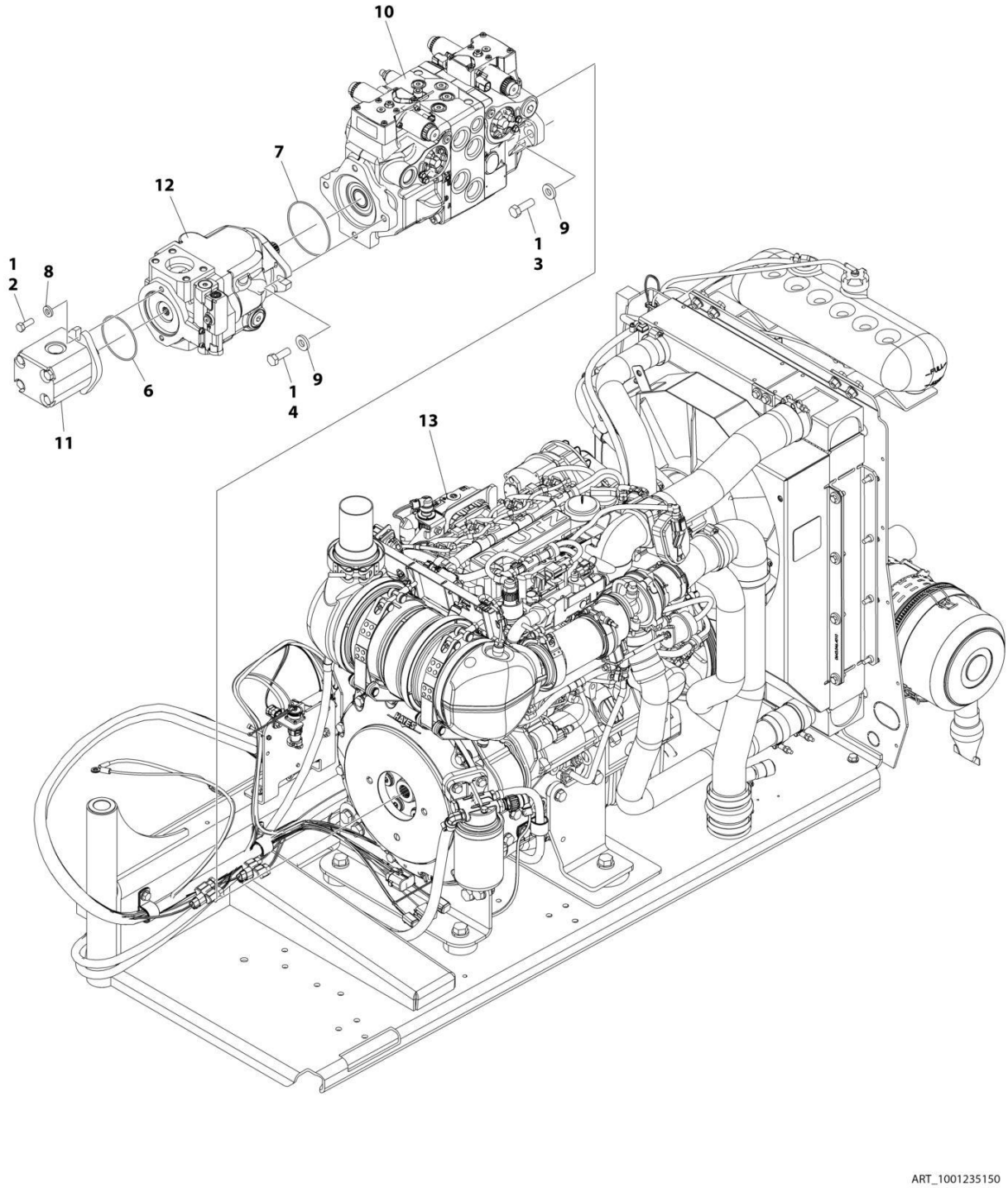

FIGURE 3-30. DEUTZ TCD2.9L4 (STAGE V) ENGINE SUB-ASSEMBLY - WITH SAUER PUMP AND ABS HOODS (WITHOUT COLD WEATHER PLUS PACKAGE)

ITEM	PART NUMBER	QTY	DESCRIPTION	REV
	1001235150	Ref	DEUTZ TCD2.9L4 (STAGE V) ENGINE SUB-ASSEMBLY	Q
1	0100011	AR	Compound, Locking	
2	0641608	2	Bolt 3/8 x 1	
3	0641812	2	Bolt 1/2 x 1-1/2	
3	0641814	2	Bolt 1/2 x 1-3/4	
4	0761215	2	Bolt M12 x 35	
6	3790152	1	O-Ring	
7	3790155	1	O-Ring	
8	4891600	2	Washer 3/8	
9	4891800	4	Washer 1/2	
10	1001108616	1	Pump Assembly - Sauer Tandem (See Separate Breakdown in this Section)	
11	1001112927	1	Pump Assembly - Sauer Gear (See Separate Breakdown in this Section)	
12	1001171095	1	Pump Assembly - Sauer Piston (See Separate Breakdown in this Section)	
13	1001235151	1	Engine Assembly (See Separate Breakdown in this Section)	

FIGURE 3-31. DEUTZ TCD2.9L4 (STAGE V) ENGINE ASSEMBLY (WITHOUT COLD WEATHER PLUS PACKAGE)

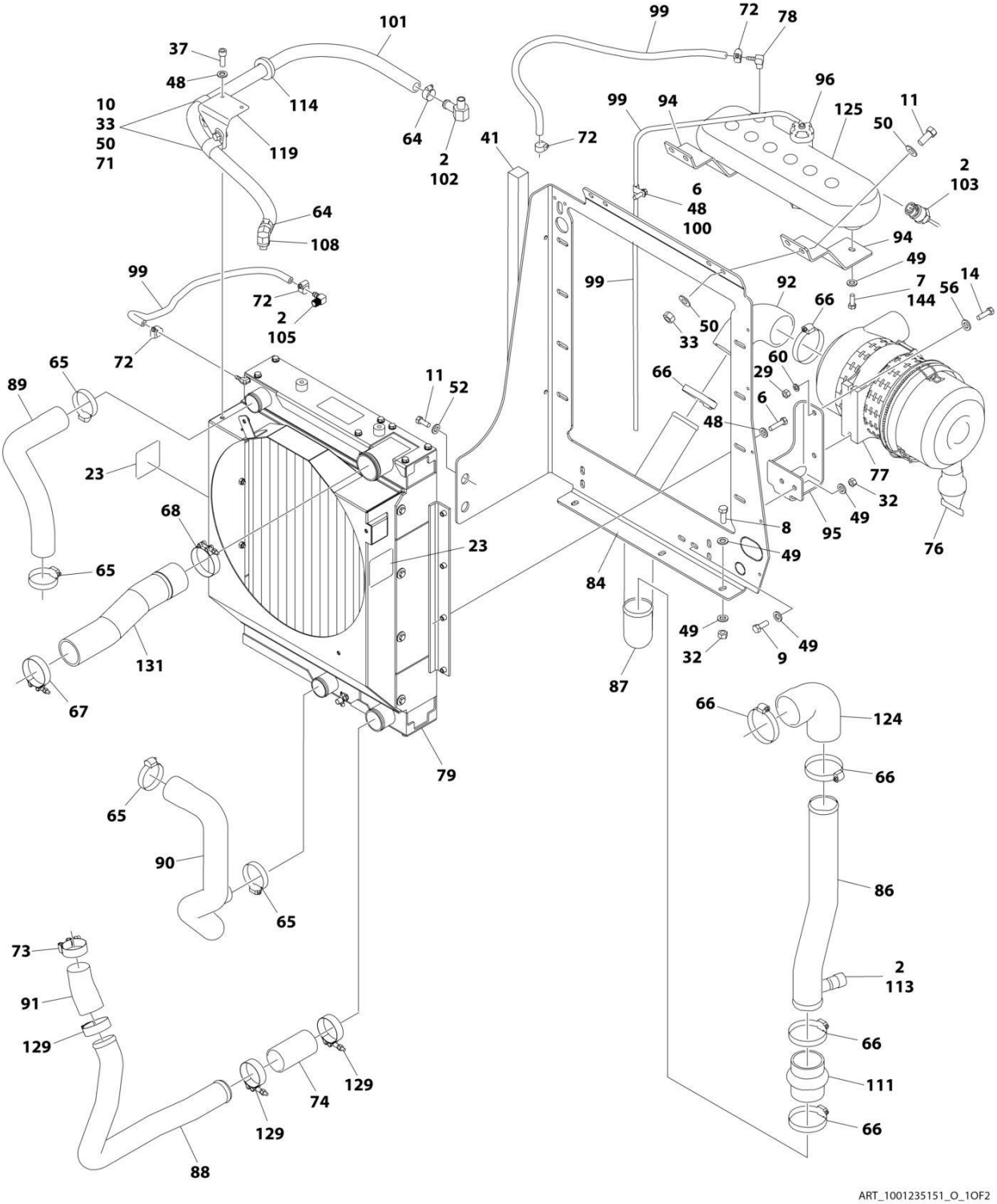

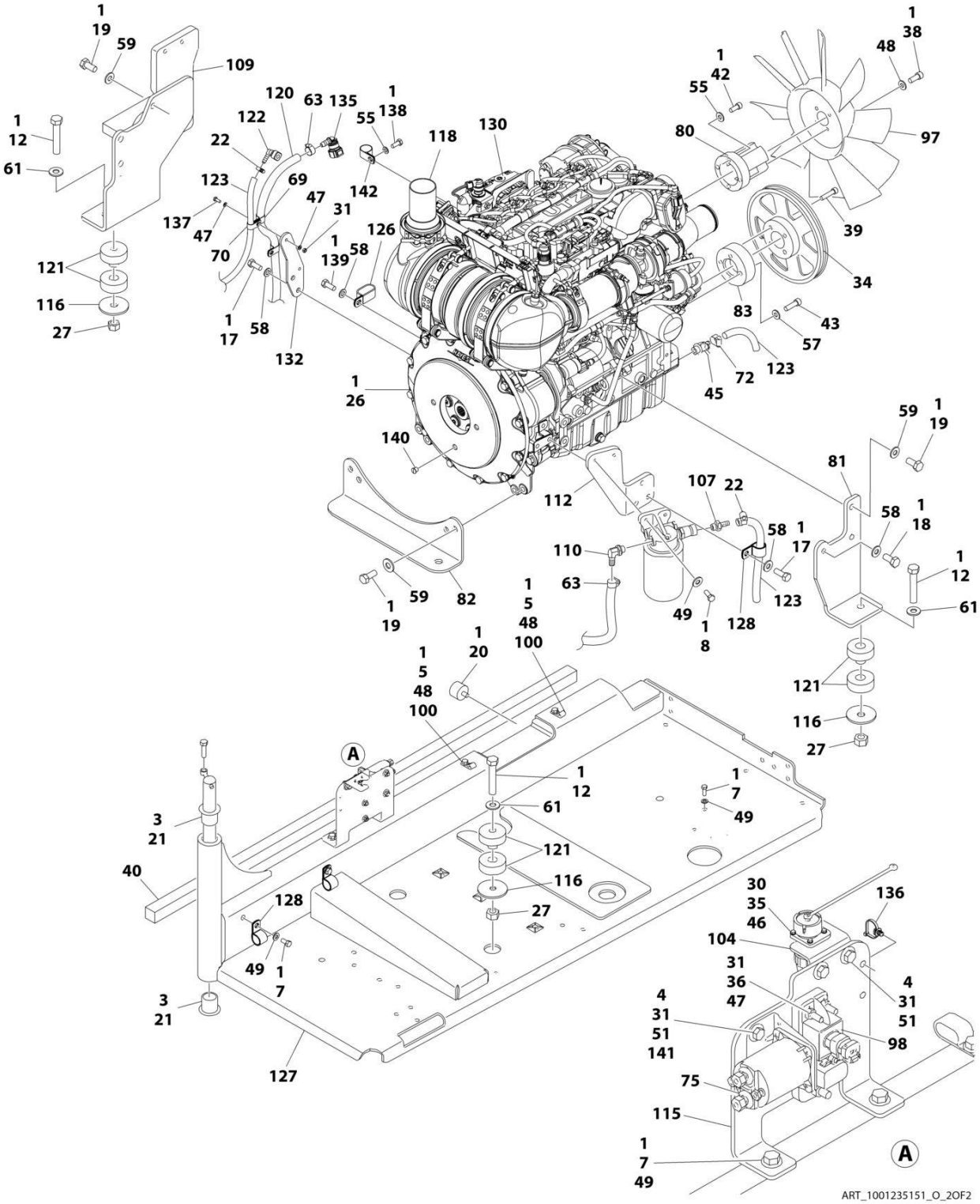
1
19
59
109
1
12
61
121
116
27
120
63
135
1
138
55
122
22
118
130
123
69
142
47
31
137
47
70
126
1
139
58
1
17
58
132
1
26
140
112
1
38
48
1
42
55
80
97
39
34
83
43
57
123
72
45
59
1
19
81
107
22
58
1
18
58
1
17
110
63
1
12
61
123
49
1
8
128
1
19
59
82
1
5
48
100
1
20
1
5
48
100
121
116
27
A
1
12
61
1
7
49
3
21
121
40
116
128
27
49
1
7
3
21
127
30
35
46
136
104
31
36
47
4
31
51
4
31
51
141
98
75
115
1
7
49
A
ART_1001235151_O_2OF2

FIGURE 3-31. DEUTZ TCD2.9L4 (STAGE V) ENGINE ASSEMBLY (WITHOUT COLD WEATHER PLUS PACKAGE)

ITEM	PART NUMBER	QTY	DESCRIPTION	REV
	1001235151	Ref	DEUTZ TCD2.9L4 (STAGE V) ENGINE ASSEMBLY	O
1	0100011	AR	Compound, Locking	
2	0100020	AR	Sealant	
3	0100062	AR	Adhesive, Loctite #680	
4	0641406	4	Bolt 1/4 x 3/4	
5	0641503	3	Bolt 5/16 x 3/8	
6	0641508	8	Bolt 5/16 x 1-1/4	
7	0641606	7	Bolt 3/8 x 3/4	
8	0641608	9	Bolt 3/8 x 1	
9	0641610	2	Bolt 3/8 x 1-1/4	
10	0641706	2	Bolt 7/16 x 3/4	
11	0641708	6	Bolt 7/16 x 1	
12	0682028	4	Bolt 5/8 x 3-1/2 Grade 8	
14	0700815	2	Bolt M8 x 35	
17	0761214	5	Bolt M12 x 30	
18	0771212	1	Bolt M12 x 25 Grade 10.9	
19	0771414	9	Bolt M14 x 30 Grade 10.9	
20	0940070	1	Bumper	
21	0961986	2	Bushing, Flanged	
22	1320022	2	Clamp	
23	1703162	2	Decal - Fan	
26	2902065	1	Pump Coupling Kit (See Separate Breakdown in this Section)	
27	3272001	4	Nut 5/8 Grade 8	
29	3290801	2	Nut M8	
30	3310401	3	Nut #4	
31	3311405	7	Nut 1/4	
32	3311605	9	Nut 3/8	
33	3311705	5	Nut 7/16	
34	1001260432	1	Pulley	
35	3910408	3	Screw #4 x 1/2	
36	3931432	1	Capscrew 1/4 x 2	
37	3931508	2	Capscrew 5/16 x 1/2	
38	3931512	4	Capscrew 5/16 x 3/4	
39	1001261085	4	Screw M10	
40	3960543	1	Seal	
41	3960544	1	Seal	
42	4031914	4	Bolt M8 x 50	
43	1001261045	4	Screw M10	
44	4240099	AR	Tie-Strap (Not Shown)	
45	4640751	1	Valve, Oil Drain	
46	4710400	3	Washer #4	
47	4711400	5	Washer 1/4	
48	4711500	17	Washer 5/16	
49	4711600	27	Washer 3/8	
50	4711700	10	Washer 7/16	
51	4751400	8	Washer 1/4	
52	4751700	2	Washer 7/16	
54	4811700	4	Washer M6	
55	4811900	5	Washer M8	

ITEM	PART NUMBER	QTY	DESCRIPTION	REV
56	4811902	2	Washer M8	
57	4812000	4	Washer M10	
58	4812100	7	Washer M12	
59	4812200	9	Washer M14	
60	4831900	2	Washer M8	
61	4892000	4	Washer 5/8	
63	8405006	2	Clamp	
64	8405007	2	Clamp	
65	8405201	4	Clamp	
66	8405204	6	Clamp	
67	8405212	1	Clamp	
68	8405213	1	Clamp	
69	8406102	2	Clip	
70	8406112	1	Clip	
71	8406302	2	Clamp	
72	8405009	5	Clamp	
73	8410014	1	Clamp	
74	91563070	1	Coupling, Rubber	
75	1001117308	1	Relay	
76	1001133633	1	Air Cleaner Assembly	
76	70024190	1	Element, Air Filter	
77	1001133634	1	Clamp	
78	1001134488	1	Fitting, 90 Barbed	
79	1001256864	1	Radiator	
80	1001135138	1	Spacer, Fan	
81	1001135560	1	Support, Engine	
82	1001135562	1	Support, Engine - Rear	
83	1001258800	1	Spacer, Pulley	
84	1001135680	1	Support, Radiator	
85	1001135779	1	Cable, Alternator Positive (Not Shown)	
86	1001135901	1	Pipe, Air Intake	
87	1001135903	1	Pipe, Air Intake	
88	1001135913	1	Pipe, Turbo to Air Cleaner	
89	1001135924	1	Hose, Radiator (Upper)	
90	1001135926	1	Pipe, Radiator (Lower)	
91	1001135943	1	Coupling, Rubber	
92	1001135946	1	Elbow, Rubber	
94	1001136626	2	Bracket	
95	1001136665	1	Bracket	
96	1001136834	1	Cap, Tank	
97	1001137276	1	Fan	
98	1001138228	1	Module, Power	
98	70023592	1	Fuse 20Amp (Switched Output)	
98	70023593	1	Fuse 30Amp (Battery Output)	
99	1001138248	8.6 ft/ 2.59m	Tubing	
100	1001138253	5	Clamp	
101	1001138524	1	Hose	
102	1001138559	1	Fitting, 90	
103	1001138827	1	Sensor, Coolant Level	
104	1001139240	1	Bracket	
105	1001140564	1	Fitting, 90 Barbed	

SECTION 3 - ENGINE

ITEM	PART NUMBER	QTY	DESCRIPTION	REV
106	1001141304	1	Wire, Glow Plug (Not Shown)	
107	1001141717	1	Fitting, Straight	
108	1001141719	1	Fitting, 90 Barbed	
109	1001142398	1	Support, Engine	
110	1001142501	1	Fitting, 90 Barbed	
111	1001142637	1	Hose, Hump	
112	1001142685	1	Bracket	
113	1001143390	1	Indicator, Air Filter Service	
114	1001144089	1	Grommet	
115	1001145154	1	Plate, Mounting	
116	1001146219	4	Washer Special	
117	1001148843	1	Harness, Fuel Filter (Not Shown - See Separate Breakdown in ELECTRICAL Section)	
118	1001153024	1	Pipe, Exhaust	
119	1001153387	1	Plate	
120	1001154405	4.7 ft/ 1.44m	Hose	
121	1001155575	4	Mount, Motor	
122	1001155823	1	Coupling	
123	1001165035	30.5 ft/ 9.3m	Hose	
124	1001165820	1	Pipe, Elbow	
125	1001166393	1	Tank, Surge	
126	1001181899	1	Clamp	
127	1001191272	1	Tray	
128	1001191620	3	Clamp	
129	1001208299	3	Clamp	
130	1001232546	1	Engine, Deutz TCD2.9L4 (Stage V) Engine Components (See Separate Breakdown in this Section)	
131	1001233492	1	Hose	
132	1001235952	1	Bracket	
133	1001237285	1	Harness, Engine (Not Shown - See Separate Breakdown in ELECTRICAL Section)	
135	1001170982	1	Adapter	
136	1001146588	1	Strap	
137	0641407	2	Bolt 1/4 x 7/8	
138	0760808	1	Bolt M8 x 16	
139	0761212	1	Bolt M12 x 25	
140	3520054	1	Plug, Hole	
141	4791400	2	Starwasher 1/4	
142	8406201	1	Clip	
143	1001165101	1	Fuel Pump/Bracket Assembly (Not Shown - See Separate breakdown in this Section)	
144	1001180620	AR	Adhesive	

FIGURE 3-32. DEUTZ TCD2.9L4 (STAGE V) ENGINE COMPONENTS

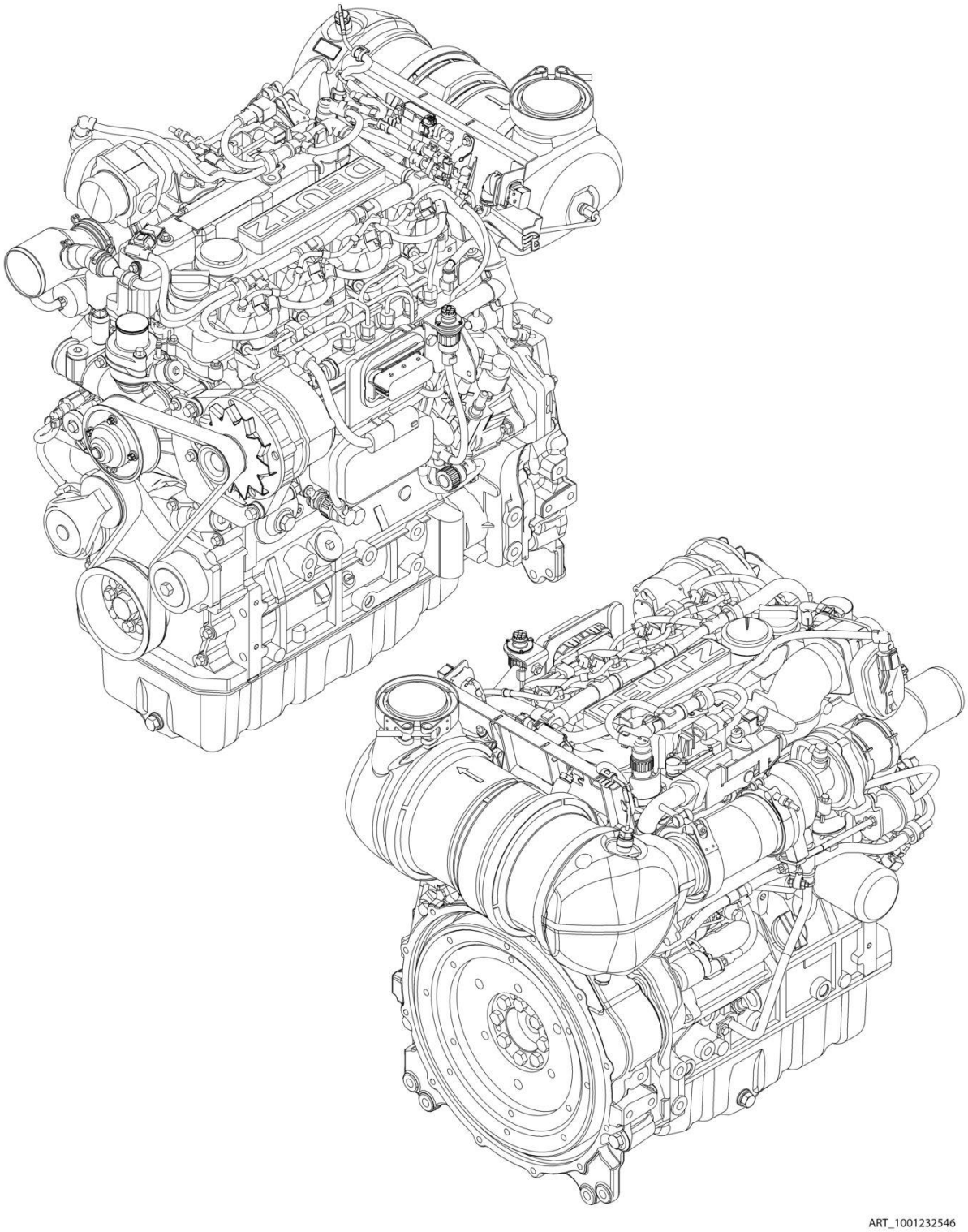

FIGURE 3-32. DEUTZ TCD2.9L4 (STAGE V) ENGINE COMPONENTS

ITEM	PART NUMBER	QTY	DESCRIPTION	REV
	1001232546	Ref	DEUTZ ENGINE COMPONENTS	H
		Ref	Note: For complete list of parts, contact JLG Parts Department	
		Ref	Air Intake System Components	
	70004503	1	Turbocharger	
		Ref	Cooling System Components	
	70029581	1	Pump, Coolant (Includes Gasket & Seals)	
	70007603	1	Thermostat	
	70005184	1	O-Ring	
	70005931	1	Gasket	
	70025142	1	Cover	
		Ref	Electrical System Components	
		Ref	Module, ECU/ECM	
	70029401	1	Generator (Includes Controller, Fan & Hardware)	
	70024915	1	Starter (Includes Solenoid & Relay)	
	70026210	1	Sender, Tacho-Generator (Speed) (On Rear of Block) (Includes Seal)	
	70024916	1	Sender, Tacho-Generator (Speed) (On Cover) (Includes Seal)	
	70024918	1	Sender, Temperature (Includes Seal) (On Air Intake Manifold)	
	70024507	1	Sensor, Pressure (Includes Seal) (On Air Intake Manifold)	
	70024504	1	Sensor, Pressure (Includes Seal) (On Fuel Filter & Side of Block)	
		Ref	Sensor, Pressure (Includes Seal) (On Exhaust Manifold)	
		Ref	Sensor, Temperature (Includes Seal) (On Exhaust Manifold)	
	70000345	4	Plug, Glow	
		Ref	Exhaust System Components	
		Ref	Valve, EGR	
	70025130	8	Bolt, Exhaust Manifold	
	70025164	1	Gasket, Exhaust Manifold	
		Ref	Outlet, Muffler	
		Ref	Muffler	
		Ref	Bracket, Muffler Mounting	
	70004504	1	Compensator, Exhaust	
		Ref	Fuel System Components	
	70024924	1	Pump, High Pressure	
		Ref	Injector (Includes Sealing washer, Clamp & O-Ring)	
	70006144	1	Pump, Fuel Supply (Includes Clamps)	
	70024961	1	Filter, Fuel (Pre-Filter Assembly) (Includes Head, Spin on filter, Sensor Cable & Seal)	
	70025153	1	Filter, Fuel Spin On	
	70024513	1	Sensor Cable (Includes Seal)	
	70025160	1	Filter, Fuel (Assembly) (Includes Head & Spin on Filter)	
		Ref	Filter, Fuel Spin On	
	70004508	1	Vol. Control Valve (Includes O-Ring & Gasket)	
		Ref	Lubricating System Components	
	7020465	2	Cap, Oil Fill	
	70005941	2	Plug, Oil Drain	
	70005942	2	Seal, Oil Drain Plug	
	70005172	1	Pump, Oil (Includes Seal & Gasket)	
	7016331	1	Filter, Oil	
	70024494	1	Cooler, Oil	
	70024925	1	Gasket, Oil Cooler	

SECTION 3 - ENGINE

ITEM	PART NUMBER	QTY	DESCRIPTION	REV
	70024904	1	Dipstick (Includes Seal)	
		Ref	Mechanical Components	
	70001870	1	Flywheel (includes Gear)	
	70004277	1	V-Belt	
	70005938	1	Gasket Set - Complete	

FIGURE 3-33. PUMP ASSEMBLY (REXROTH) (DEUTZ TD2011 ENGINES)

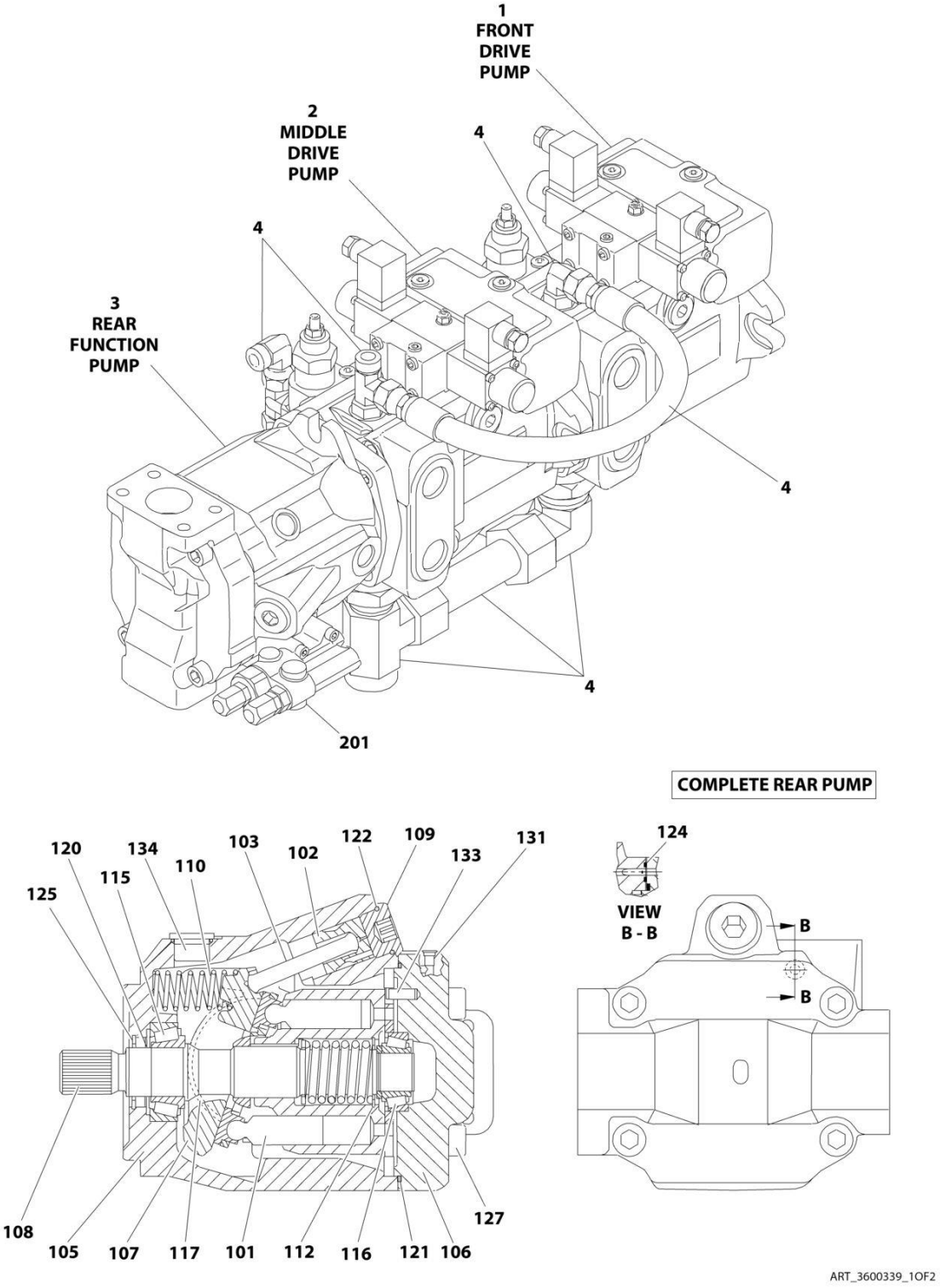

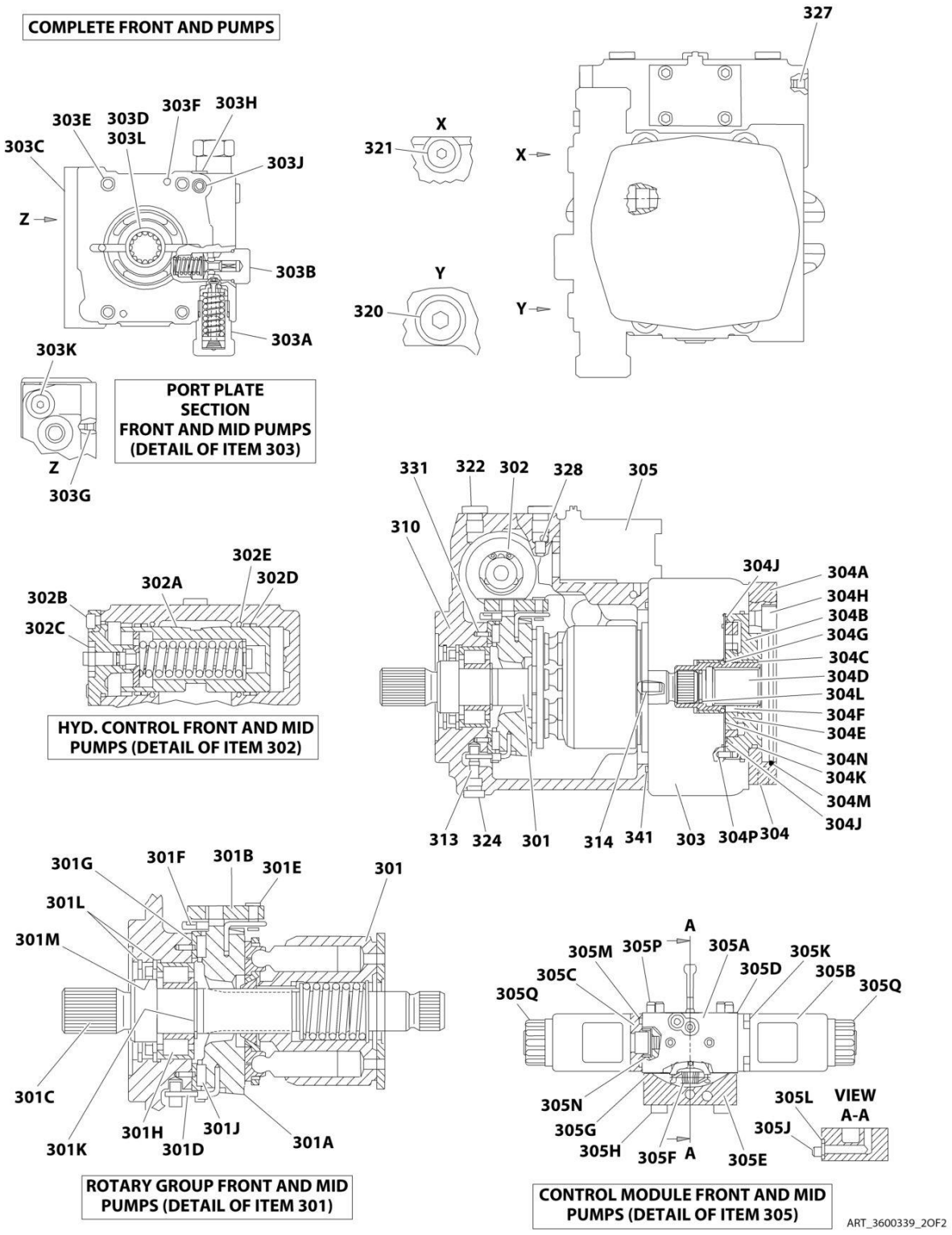
COMPLETE FRONT AND PUMPS
303E
303D
303F
303H
303L
303C
303J
Z
303B
303A
303K
Z
303G
PORT PLATE SECTION FRONT AND MID PUMPS (DETAIL OF ITEM 303)
X
321
Y
320
327
X
Y
331
322
302
328
305
310
304J
304A
304H
304B
304G
304C
304D
304L
304F
304E
304N
304K
304M
304J
313
324
301
314
341
303
304P
304
302E
302D
302A
302B
302C
HYD. CONTROL FRONT AND MID PUMPS (DETAIL OF ITEM 302)
301G
301F
301B
301E
301
301L
301M
301C
301K
301H
301D
301J
301A
ROTARY GROUP FRONT AND MID PUMPS (DETAIL OF ITEM 301)
A
305M
305P
305A
305K
305D
305B
305C
305Q
305Q
305N
305G
305H
305F
A
305E
305L
VIEW A-A
305J
CONTROL MODULE FRONT AND MID PUMPS (DETAIL OF ITEM 305)
ART_3600339_2OF2

FIGURE 3-33. PUMP ASSEMBLY (REXROTH) (DEUTZ TD2011 ENGINES)

ITEM	PART NUMBER	QTY	DESCRIPTION	REV
	3600339	Ref	PUMP ASSEMBLY (REXROTH) (DEUTZ TD2011 ENGINES)	D
1	7024042	1	Front Drive Pump Assembly (Includes Items 301-341)	
2	7024043	1	Middle Drive Pump Assembly (Includes Items 301-341)	
3	7024044	1	Rear Function Pump Assembly (Includes Items 101-201)	
4	70001952	1	Hydraulic Kit (Includes all Rexroth Supplied Hydraulic Fittings, Hoses and Tubes)	
	7024044	Ref	REAR FUNCTION PUMP ASSEMBLY	
101	7024914	1	Rotary Section	
102	See Note	1	Piston, Control (Note: Not Available - Purchase Complete Assembly)	
103	See Note	1	Rod, Piston (Note: Not Available - Purchase Complete Assembly)	
105	See Note	1	Housing, Pump (Note: Not Available - Purchase Complete Assembly)	
106	See Note	1	Plate, Port (Note: Not Available - Purchase Complete Assembly)	
107	7024915	1	Plate, Swash	
108	7024916	1	Driveshaft	
109	See Note	1	Plug (Note: Not Available for Purchase)	
110	See Note	1	Spring (Note: Not Available for Purchase)	
112	7012709	1	Shim	
115	7024038	1	Bearing, Roller	
116	7012706	1	Bearing, Roller	
117	7024917	2	Shell, Cradle	
120	7024918	1	Seal, Shaft	
121	7024919	1	O-Ring	
122	7024920	1	O-Ring	
124	7024921	1	Seal	
125	7012715	1	V-Ring	
127	See Note	4	Capscrew M12 x 45 Grade 10.9 (Note: Not Available for Purchase)	
131	See Note	1	Plug (Note: Not Available for Purchase)	
133	See Note	1	Pin, Dowel (Note: Not Available for Purchase)	
134	See Note	1	Plug (Note: Not Available for Purchase)	
201	7024913	Ref	Pilot Valve Assembly	
		Ref	Note: Two mounting designs of p/n 7024913 pilot valve exist. Early design uses qty. 3 O-rings. Late design uses qty 1 sealing plate. Seal designs cannot be interchanged. Verify seal design before ordering.	
201	7024922	3	O-Ring (Seals between Pilot Valve and Rear Pump)	
201	70021867	1	Plate, Sealing (Seals between Pilot Valve and Rear Pump)	
		Ref	FRONT DRIVE PUMP ASSEMBLIES	
	7024042	Ref	Front Drive Pump Assembly	
	7024043	Ref	Middle Drive Pump Assembly	
301	7024064	1	Rotary Group	
301A	See Note	NSS	Cradle (Note: Use Item 301)	
301B	See Note	NSS	Ring, Slide (Note: Use Item 301)	
301C	See Note	NSS	Driveshaft (Note: Use Item 301)	
301D	See Note	NSS	Wire (Note: Use Item 301)	
301E	See Note	NSS	Pin, Joint (Note: Use Item 301)	
301F	See Note	NSS	Wire (Note: Use Item 301)	
301G	See Note	NSS	Liner, Bearing (Note: Use Item 301)	
301H	See Note	NSS	Bearing, Roller (Note: Use Item 301)	
301J	See Note	NSS	Cradle Bearing Assembly (Note: Use Item 301)	

ITEM	PART NUMBER	QTY	DESCRIPTION	REV
301K	See Note	NSS	Ring, Retaining (Note: Use Item 301)	
301L	70001968	2	Ring, Retaining	
301M	7024070	1	Seal, Shaft Ring	
302	7024065	1	Control Group - Hydraulic	
302A	See Note	NSS	Piston, Positioning - Complete (Note: Use Item 302)	
302A	7024071	1	O-Ring, Outer Seal	
302A	7024072	1	O-Ring, Stem	
302B	See Note	4	Capscrew M6 x 12 (Note: Not Available - Purchase Locally)	
302C	See Note	NSS	Nut (Note: Use Item 302)	
302D	See Note	NSS	Ring, Guide (Note: Use Item 302)	
302E	See Note	NSS	Seal, O-Ring (Note: Use Item 302)	
303	7024911	1	Port Plate Group	
303A	7024073	2	Cartridge, Relief Valve (High Pressure)	
303A	7024075	1	O-Ring	
303A	7024076	1	Ring, Back-up	
303B		Ref	Cartridge Options:	
303B	7024097	1	Front Pump Cartridge (Lock Valve with Orifice) Note: Sold as an Assembly except Outer Seal.	
303B	7024075	1	O-Ring	
303B	7023881	1	Middle Pump Cartridge (Pressure Relief Valve) Note: Sold as an Assembly except Outer Seal.	
303B	7024077	1	O-Ring	
303C	See Note	NSS	Plate, Port (Note: Use Item 303)	
303D	See Note	NSS	Bushing, Bearing (Note: Use Item 303)	
303E	See Note	4	Capscrew M12 x 70 Grade10.9 (Note: Not Available - Purchase Locally)	
303F	See Note	NSS	Pin, Dowel (Note: Use Item 303)	
303G	See Note	NSS	Pin, Break-Off (Note: Use Item 303)	
303H	See Note	1	Screw, Locking M10 x 1 (Note: Not Available - Purchase Locally)	
303J	7024908	2	O-Ring	
303K	See Note	2	Screw, Locking 7/16 (Note: Not Available - Purchase Locally)	
303L	See Note	NSS	Bearing, Roller (Note: Use Item 303)	
304	7024906	1	Internal Gear Pump	
304A	See Note	NSS	Flange, Intermediate (Note: Use Item 304)	
304B	See Note	NSS	IZP-Housing (Note: Use Item 304)	
304C	See Note	NSS	Bushing, Bearing (Note: Use Item 304)	
304D	See Note	NSS	Coupling, Driveshaft Through (Note: Use Item 304)	
304E	See Note	NSS	Gear Set (Note: Use Item 304)	
304F	See Note	NSS	Key, Driveshaft (Note: Use Item 304)	
304G	See Note	NSS	Ring, Retaining (Note: Use Item 304)	
304H	See Note	4	Capscrew M10 x 20 (Note: Not Available - Purchase Locally)	
304J	7024080	2	Seal	
304K	7024081	1	O-Ring	
304L	See Note	NSS	Ring, Retaining (Note: Use Item 304)	
304M	See Note	NSS	O-Ring (Note: Use Item 304)	
304N	7024005	1	Plate, Wear	
304P	See Note	NSS	Pin, Cylinder (Note: Use Item 304)	
305	7024068	1	Control Module	
305A	7024084	1	Valve Body, Lever and Internal Components	
305B	7024083	2	Coil, Solenoid	
305C	See Note	NSS	Spacer, Coil (Note: Use Item 305)	

ITEM	PART NUMBER	QTY	DESCRIPTION	REV
305D	7024085	1	Gasket	
305E	See Note	NSS	Cover (Note: Use Item 305)	
305F	See Note	NSS	Spring, Draw (Note: Use Item 305)	
305G	See Note	NSS	Gasket (Note: Use Item 305)	
305H	See Note	4	Capscrew M6 x 65 (Note: Not Available - Purchase Locally)	
305J	See Note	1	Capscrew M6 x 45 (Note: Not Available - Purchase Locally)	
305K	See Note	8	Capscrew M5 x 10 (Note: Not Available - Purchase Locally)	
305L	7024087	1	O-Ring	
305M	7024088	2	O-Ring	
305N	7024089	2	Cup, Spring	
305P	See Note	NSS	Pin, Cylinder (Note: Use Item 305)	
305Q	70002569	2	Nut, Coil	
310	See Note	1	Housing (Note: Not Available for Purchase)	
313	See Note	2	Pin, Dowel (Note: Not Available for Purchase)	
314	See Note	1	Pin, Cylinder (Note: Not Available for Purchase)	
320	See Note	1	Screw 7/8 (Front Drive Pump Only) (Note: Not Available - Purchase Locally)	
321	See Note	1	Screw 9/16 (Note: Not Available - Purchase Locally)	
322	See Note	1	Screw 7/16 (Note: Not Available - Purchase Locally)	
324	See Note	1	Screw M10 x 1 (Note: Not Available - Purchase Locally)	
327	See Note	1	Pin, Double Break-Off (Note: Not Available for Purchase)	
328	7018936	2	Orifice	
331	See Note	2	Pin, Clamping (Note: Not Available for Purchase)	
341	7024069	1	O-Ring	

FIGURE 3-34. PUMP ASSEMBLY (REXROTH) (DEUTZ TCD2.9L4 ENGINES AND DEUTZ TCD2.9L4 (STAGE V) ENGINES)

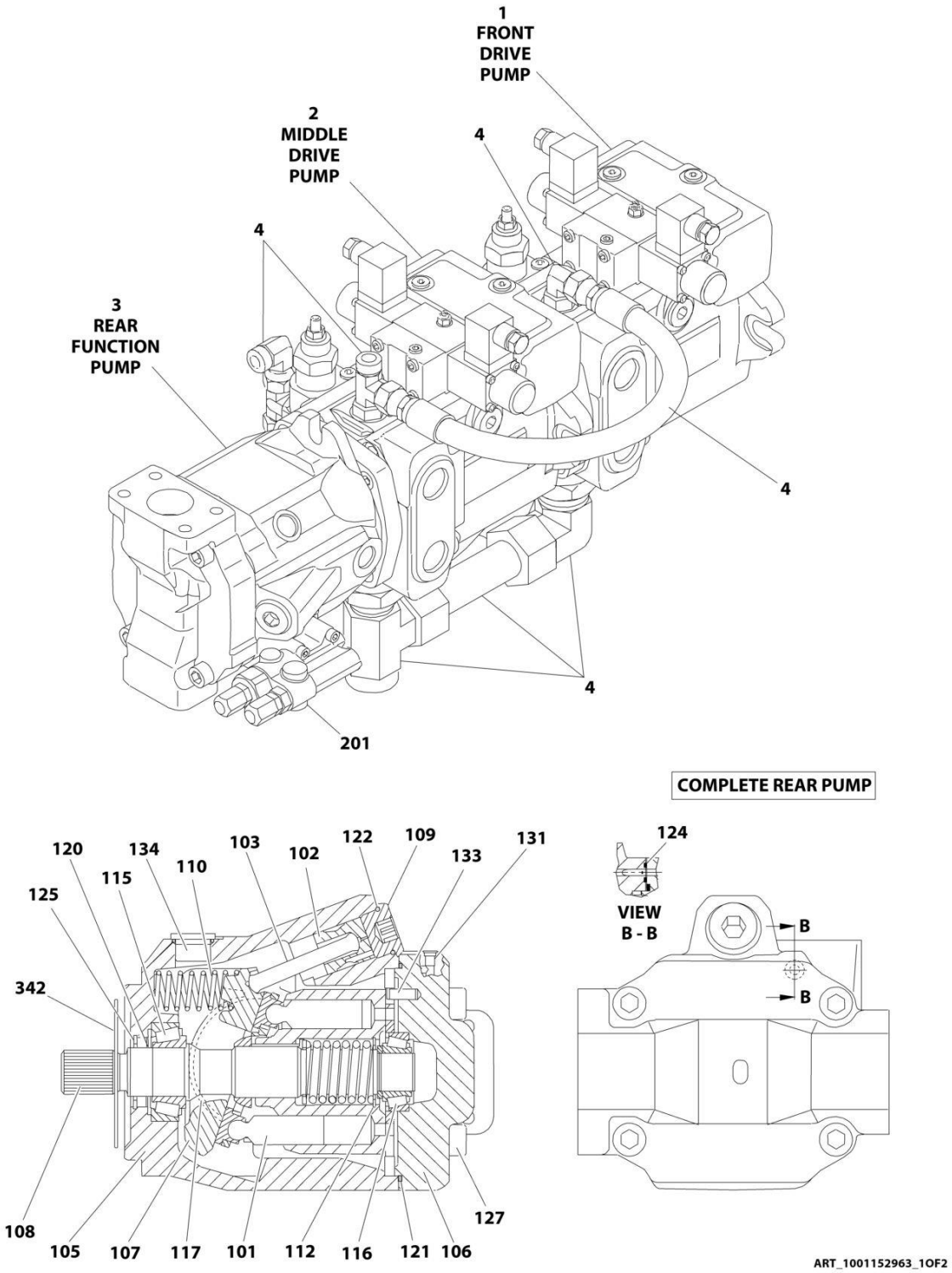

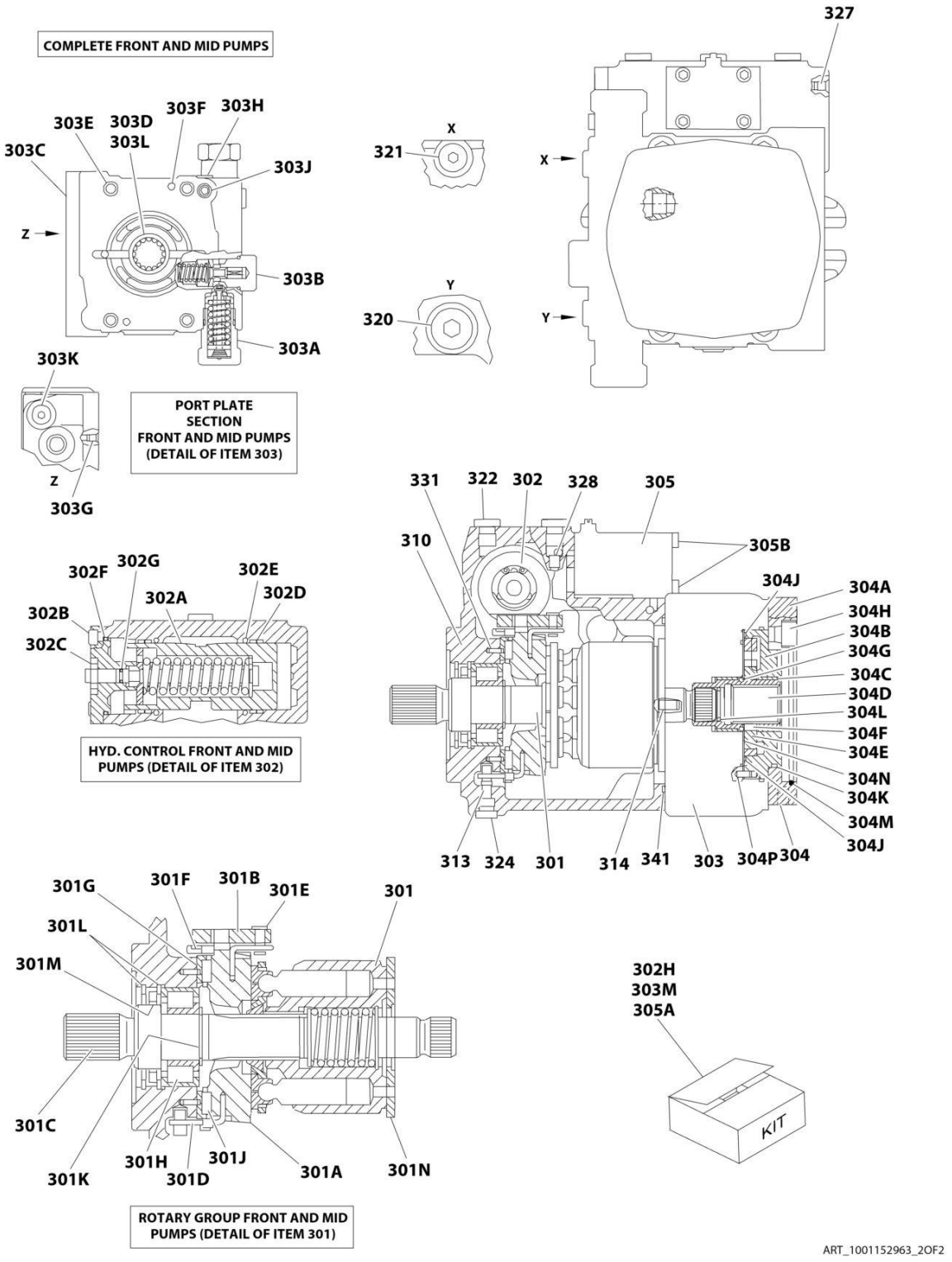
COMPLETE FRONT AND MID PUMPS
303E
303D
303L
303F
303H
303C
303J
Z
303B
303A
303K
Z
303G
PORT PLATE SECTION FRONT AND MID PUMPS (DETAIL OF ITEM 303)
X
321
Y
320
327
X
Y
331
322
302
328
305
310
305B
304J
304A
304H
304B
304G
304C
304D
304L
304F
304E
304N
304K
304M
304J
313
324
301
314
341
303
304P
304
302F
302G
302E
302A
302D
302B
302C
HYD. CONTROL FRONT AND MID PUMPS (DETAIL OF ITEM 302)
301G
301F
301B
301E
301
301L
301M
301C
301K
301H
301D
301J
301A
301N
ROTARY GROUP FRONT AND MID PUMPS (DETAIL OF ITEM 301)
302H
303M
305A
KIT
ART_1001152963_2OF2

FIGURE 3-34. PUMP ASSEMBLY (REXROTH) (DEUTZ TCD2.9L4 ENGINES AND DEUTZ TCD2.9L4 (STAGE V) ENGINES)

ITEM	PART NUMBER	QTY	DESCRIPTION	REV
	1001152963	Ref	PUMP ASSEMBLY (REXROTH) (DEUTZ TCD2.9L4 ENGINES)	C
1	70005480	1	Front Drive Pump Assembly Options (Includes Items 301-341)	
2	70005481	1	Middle Drive Pump Assembly (Includes Items 301-341)	
3	7024044	1	Rear Function Pump Assembly (Includes Items 101-201)	
4	See Note	NSS	Hydraulic Kit (Includes all Rexroth Supplied Hydraulic Fittings, Hoses and Tubes) (Note: Not Available for Purchase)	
	7024044	Ref	REAR FUNCTION PUMP ASSEMBLY	
101	70003173	1	Rotary Section	
102	See Note	1	Piston Control (Note: Not Available - Purchase Complete Assembly)	
103	See Note	1	Rod, Piston (Note: Not Available - Purchase Complete Assembly)	
105	See Note	1	Housing, Pump (Note: Not Available - Purchase Complete Assembly)	
106	See Note	1	Plate, Port (Note: Not Available - Purchase Complete Assembly)	
107	70003174	1	Plate, Swash	
108	70003175	1	Driveshaft	
109	See Note	1	Plug (Note: Not Available for Purchase)	
110	See Note	1	Spring (Note: Not Available for Purchase)	
112		Ref	Shim	
115	7024038	1	Bearing, Roller	
116	7012706	1	Bearing, Roller	
117	7024917	2	Shell, Cradle	
120	7024918	1	Seal, Shaft	
121	7024919	1	O-Ring	
122	7024920	1	O-Ring	
124	7024921	1	Seal	
125	70003177	1	V-Ring	
127	See Note	4	Capscrew M12 x 45 Grade 10.9 (Note: Not Available for Purchase)	
131	See Note	1	Plug (Note: Not Available for Purchase)	
133	See Note	1	Pin, Dowel (Note: Not Available for Purchase)	
134	See Note	1	Plug (Note: Not Available for Purchase)	
201	7024913	Ref	Pilot Valve Assembly	
		Ref	Note: Two mounting designs of p/n 7024913 pilot valve exist. Early design uses qty. 3 o-rings. Late design uses qty. 1 sealing plate. Seal designs cannot be interchanged. Verify seal design before ordering.	
201	7024922	3	O-Ring (Seals between Pilot Valve and Rear Pump)	
201	70021867	1	Plate, Sealing (Seals between Pilot Valve and Rear Pump)	
		Ref	FRONT DRIVE PUMP ASSEMBLIES	
	70005480	Ref	Front Drive Pump Assembly	
	70005481	Ref	Middle Drive Pump Assembly	
		Ref	Note: Service Parts not available at time of printing, call-out number on illustration for ref only.	
301	7024064	1	Rotary Group	
301A	See Note	NSS	Cradle (Note: Use Item 301)	
301B	See Note	NSS	Ring, Slide (Note: Use Item 301)	
301C	7023887	1	Driveshaft	
301D	See Note	NSS	Wire (Note: Use Item 301)	
301E	See Note	NSS	Pin, Joint (Note: Use Item 301)	
301F	See Note	NSS	Wire (Note: Use Item 301)	

ITEM	PART NUMBER	QTY	DESCRIPTION	REV
301G	See Note	NSS	Liner, Bearing (Note: Use Item 301)	
301H	See Note	NSS	Bearing, Roller (Note: Use Item 301)	
301J	See Note	NSS	Cradle Bearing Assembly (Note: Use Item 301)	
301K	70001968	1	Ring, Retaining	
301L	See Note	NSS	Ring, Retaining (Note: Not Available for Purchase)	
301M	70003167	1	Seal, Shaft Ring	
301N	70000950	1	Plate	
302	7024065	1	Control Group - Hydraulic	
302A	See Note	NSS	Piston, Positioning - Complete (Note: Use Item 302)	
302A	See Note	NSS	O-Ring, Outer Seal (Note: Not Available for Purchase)	
302A	See Note	NSS	O-Ring, Stem (Note: Not Available for Purchase)	
302B	See Note	4	Capscrew M6 x 12 (Note: Not Available - Purchase Locally)	
302C	See Note	NSS	Nut (Note: Use Item 302)	
302D	See Note	NSS	Ring, Guide (Note: Use Item 302)	
302E	See Note	NSS	Seal, O-Ring (Note: Use Item 302)	
302F	7024071	1	O-Ring	
302G	7024072	1	O-Ring	
302H	7024006	1	Seal Kit - Control Section	
303	7024905	1	Port Plate Group (Front)	
303	7024911	1	Port Plate Group (Mid)	
303A	7024073	1	Cartridge, Relief Valve (High Pressure)	
303A	7024075	1	O-Ring	
303A	7024076	1	Ring, Back-up	
303B		Ref	Cartridge Options:	
303B	7024907	1	Front Pump Cartridge (Lock Valve With Orifice)	
303B	7024909	1	Screw, Locking	
303B	7024075	1	O-Ring	
303B	70020329	1	Middle Pump Cartridge (Pressure Relief Valve)	
303B	7024909	1	Screw, Locking	
303B	7024077	1	O-Ring	
303C	See Note	NSS	Plate, Port (Note: Use Item 303)	
303D	See Note	NSS	Bushing, Bearing (Note: Use Item 303)	
303E	See Note	4	Capscrew M12 x 70 Grade 10.9 (Note: Not Available - Purchase Locally)	
303F	See Note	NSS	Pin, Dowel (Note: Use Item 303)	
303G	70003340	1	Pin, Break-Off	
303H	See Note	1	Screw, Locking M10 x 1 (Note: Not Available - Purchase Locally)	
303J	7024908	1	O-Ring	
303K	See Note	2	Screw, Locking 7/16 (Note: Not Available - Purchase Locally)	
303L	See Note	NSS	Bearing, Roller (Note: Use Item 303)	
303M	7024006	1	Seal Kit - Port Plate Group	
304	7024906	1	Internal Gear Pump	
304A	See Note	NSS	Flange, Intermediate (Note: Use Item 304)	
304B	See Note	NSS	IZP-Housing (Note: Use Item 304)	
304C	See Note	NSS	Bushing, Bearing (Note: Use Item 304)	
304D	See Note	NSS	Coupling, Driveshaft Through (Note: Use Item 304)	
304E	7024078	1	Gear Set	
304F	7024079	1	Key, Driveshaft	
304G	80934174	1	Ring, Retaining	
304H	See Note	4	Capscrew M10 x 20 (Note: Not Available - Purchase Locally)	
304J	See Note	NSS	Seal (Note: Not Available for Purchase)	

SECTION 3 - ENGINE

ITEM	PART NUMBER	QTY	DESCRIPTION	REV
304K	7024081	1	O-Ring	
304L	See Note	NSS	Ring, Retaining (Note: Use Item 304)	
304M	See Note	NSS	O-Ring (Note: Use Item 304)	
304N	See Note	NSS	Plate, Wear (Note: Not Available for Purchase)	
304P	See Note	NSS	Pin, Cylinder (Note: Use Item 304)	
305	70003165	1	Control Module	
305	70003170	1	Coil, Solenoid	
305A	70020336	1	Seal Kit - Control Module	
305B	80934644	4	Capscrew	
310	See Note	1	Housing (Note: Not Available for Purchase)	
313	See Note	2	Pin, Dowel (Note: Not Available for Purchase)	
314	See Note	1	Pin, Cylinder (Note: Not Available for Purchase)	
320	7026980	1	Screw 7/8 (Front Drive Pump Only)	
321	80334079	1	Screw 9/16	
322	See Note	1	Screw 7/16 (Note: Not Available - Purchase Locally)	
324	See Note	1	Screw M10 x 1 (Note: Not Available - Purchase Locally)	
327	70003340	1	Pin, Double Break-Off	
328	7018936	1	Orifice	
331	7024096	2	Pin, Clamping	
341	7024069	1	O-Ring	
342	70007178	1	O-Ring	

FIGURE 3-35. PUMP ASSEMBLY (SAUER TANDEM)

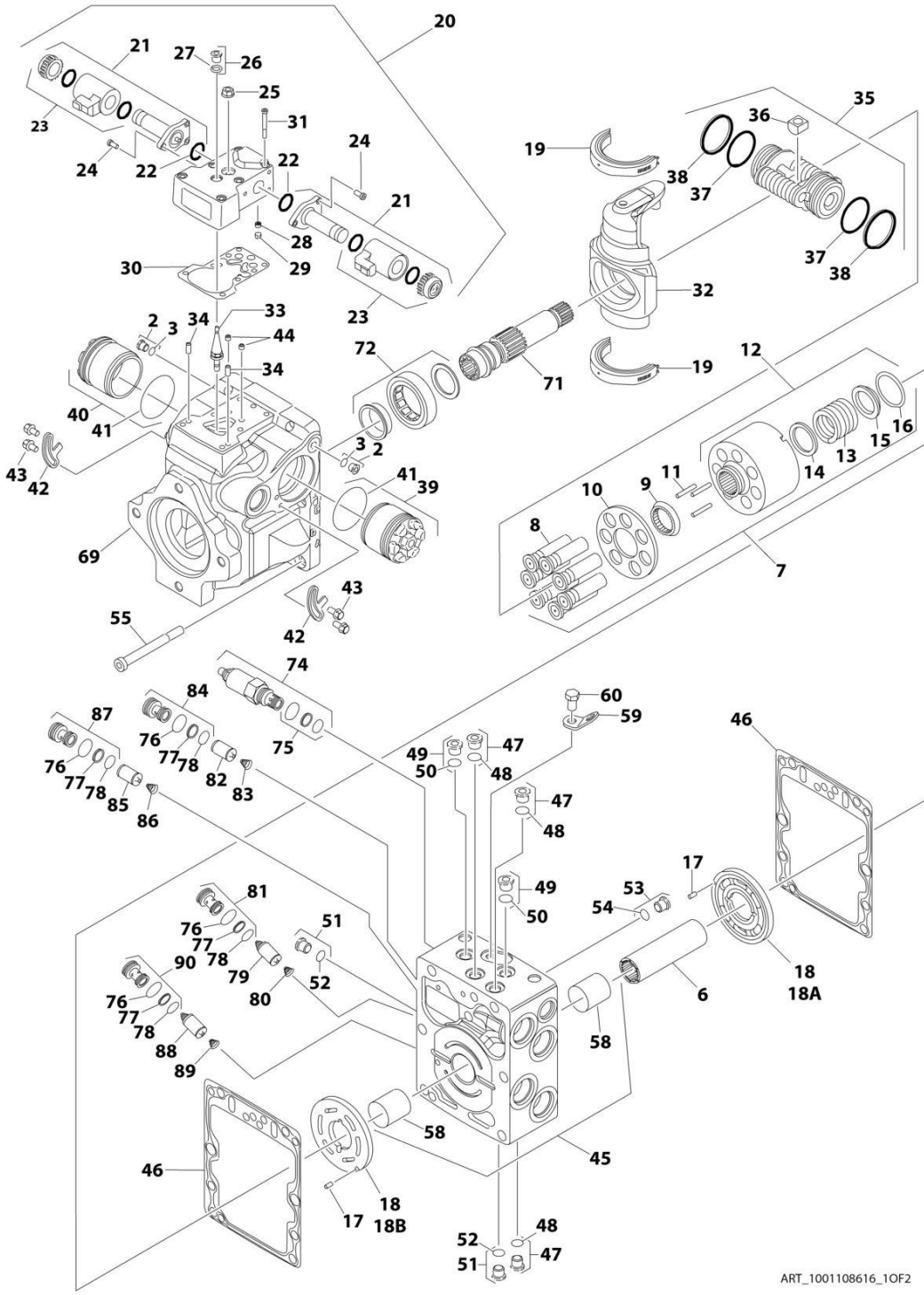

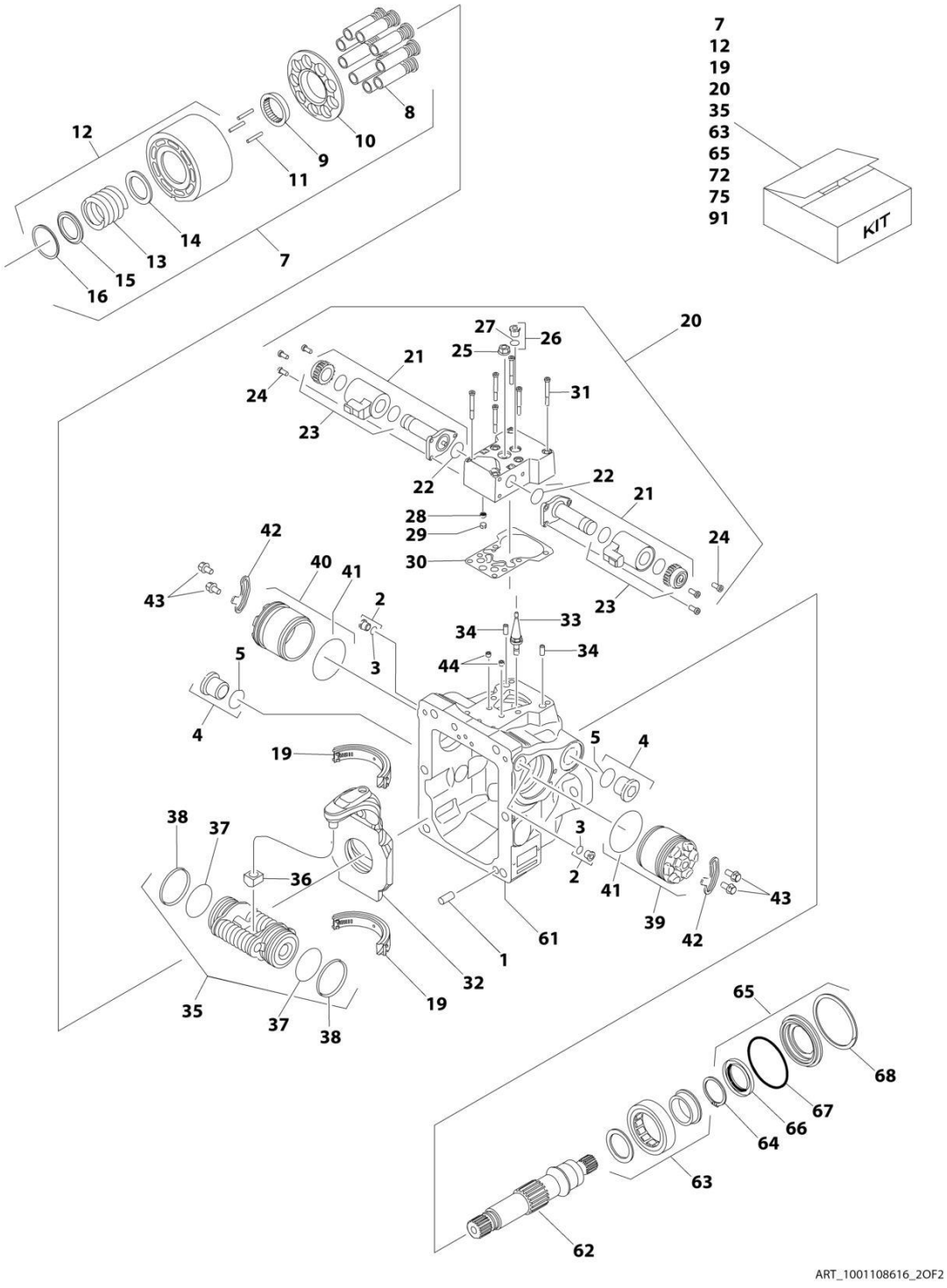
7
12
19
20
35
63
65
72
75
91
KIT
ART_1001108616_2OF2

FIGURE 3-35. PUMP ASSEMBLY (SAUER TANDEM)

ITEM	PART NUMBER	QTY	DESCRIPTION	REV
	1001108616	Ref	PUMP ASSEMBLY (SAUER TANDEM)	D
1	70002132	4	Pin	
2	70002133	4	Plug Assembly (Includes Item 3)	
3	7007207	4	O-Ring (Part of Item 2)	
4	7007419	2	Plug Assembly (Includes Item 5)	
5	7007418	2	O-Ring (Part of Item 4)	
6	70002600	1	Coupling	
7	70002135	2	Cylinder Block Kit (Each Kit Includes Qty 1 of Items 8-10 & 12-16 & Qty 3 of Item 11)	
8	70002136	2	Piston Assembly Kit (Includes Qty 9 Piston Assemblies) (Part of Item 7)	
9	70002137	2	Guide, Slipper Retainer (Part of Item 7)	
10	70002138	2	Retainer, Slipper (Part of Item 7)	
11	7021275	6	Pin, Slipper Retainer Holddown (Part of Item 7)	
12	70002135	2	Cylinder Block Assembly (Includes Qty 1 of Item 13-16) (Part of Item 7)	
13	70002139	2	Spring (Part of Item 12)	
14	70002140	2	Washer (Part of Item 12)	
15	70002141	2	Washer (Part of Item 12)	
16	70002142	2	Ring, Retaining (Part of Item 12)	
17	7007446	2	Pin	
18		Ref	Plate, Valve Options:	
18A	70002601	1	Plate, CW Valve	
18B	70002602	1	Plate, CCW Valve	
19	70002145	2	Swash Plate Bearing Kit (Includes Qty 2 Bearings)	
20	70002618	2	EDC Kit (Includes Items 21-31)	
21	70002619	4	Solenoid Valve Assembly (Includes Items 22 & 23) (Part of Item 20)	
22	70002148	4	O-Ring (2 Per EDC Assembly) (Part of Item 21)	
23	70002620	4	Coil, Nut and Seals Kit (2 Per EDC Assembly) (Part of Item 21)	
24	70002150	12	Screw (Part of Item 20)	
25	7022301	2	Nut, Seal (Part of Item 20)	
26	70002151	2	Plug Assembly (Part of Item 20) (Includes Item 27)	
27	7007207	2	O-Ring (Part of Item 26)	
28	70002134	2	Screen (Part of Item 20)	
29	70002153	2	Ring, Locking (Part of Item 20)	
30	70002154	2	Gasket, Control (Part of Item 20)	
31	70002156	12	Capscrew (Part of Item 20)	
32	70002152	2	Swash Plate	
33	70002155	2	Link, Swash Plate	
34	70002157	4	Pin, Dowel	
35	70002158	2	Servo Piston Assembly (Includes Items 36-38)	
36	70002159	2	Block, Slider (Part of Item 35)	
37	70002160	2	O-Ring (Part of Item 35)	
38	70002161	2	Ring, Piston (Part of Item 35)	
39	70002162	2	Cylinder, Servo	
40	70002162	2	Cylinder, Servo	
41	70002163	4	O-Ring	
42	70002164	4	Plate, Locking	
43	70002165	8	Screw	

ITEM	PART NUMBER	QTY	DESCRIPTION	REV
44	70002604	4	Orifice	
45	70002605	1	Center Section Assembly (Includes Item 58)	
46	70002168	2	Gasket, End Cap	
47	70001958	2	Plug Assembly (Includes Item 48)	
48	7021256	2	O-Ring (Part of Item 47)	
49	70001958	2	Plug Assembly (Includes Item 50)	
50	7021256	2	O-Ring (Part of Item 49)	
51	70001958	2	Plug Assembly (Includes Item 52)	
52	7021256	2	O-Ring (Part of Item 51)	
53	70001958	2	Plug Assembly (Includes Item 54)	
54	7021256	2	O-Ring (Part of Item 53)	
55	70002606	4	Capscrew	
58	70002607	2	Bearing, Journal (Part of Item 45)	
59	70002608	1	Bracket, Lifting	
60	70002609	1	Screw	
61	See Note	1	Housing (Note: Not Available for Purchase)	
62	70002175	1	Shaft	
63	70002610	1	Ball Bearing Kit	
	7007439	1	Ring, Retaining	
65	70002174	1	Shaft Seal Kit (Includes Items 66-68) (Note: This is a universal kit and will contain extra pieces that are not used on this pump assembly)	
66	70002177	1	Seal, Lip	
67	70002178	1	O-Ring	
68	70002179	1	Ring, Retaining	
69	See Note	1	Housing (Note: Not Available for Purchase)	
71	70002612	1	Shaft	
72	70002610	1	Ball Bearing Kit	
74	70002621	1	High Pressure Relief Valve Cartridge Assembly (Includes Item 75)	
75	70002622	1	Seal Kit - 70002621 Valve (Part of Item 74)	
76	7007415	1	O-Ring (Part of Items 81, 84, 87 & 90)	
77	7021293	1	Ring, Back-up (Part of Items 81, 84, 87 & 90)	
78	7022300	1	O-Ring (Part of Items 81, 84, 87 & 90)	
79	70002616	1	SCR Valve Assembly	
80	7024800	1	Spring	
81	7021265	1	Plug Assembly (Includes Qty 1 of Items 76-78)	
82	70002616	1	SCR Valve Assembly	
83	7024800	1	Spring	
84	7021265	1	Plug Assembly (Includes Qty 1 of Item 76-78)	
85	70002616	1	SCR Valve Assembly	
86	7024800	1	Spring	
87	70002617	1	Plug Assembly (Includes Qty 1 of Item 76-78)	
88	70002616	1	SCR Valve Assembly	
89	7024800	1	Spring	
90	7021265	1	Plug Assembly (Includes Qty 1 of Items 76-78)	
91	70002623	1	Overhaul Seal Kit (Includes Items 3, 5, 22, 27, 30, 37, 38, 41, 46, 48, 50, 52, 54, 66, 67, 75, 76, 77 & 78)	

FIGURE 3-36. PUMP ASSEMBLY (SAUER PISTON)

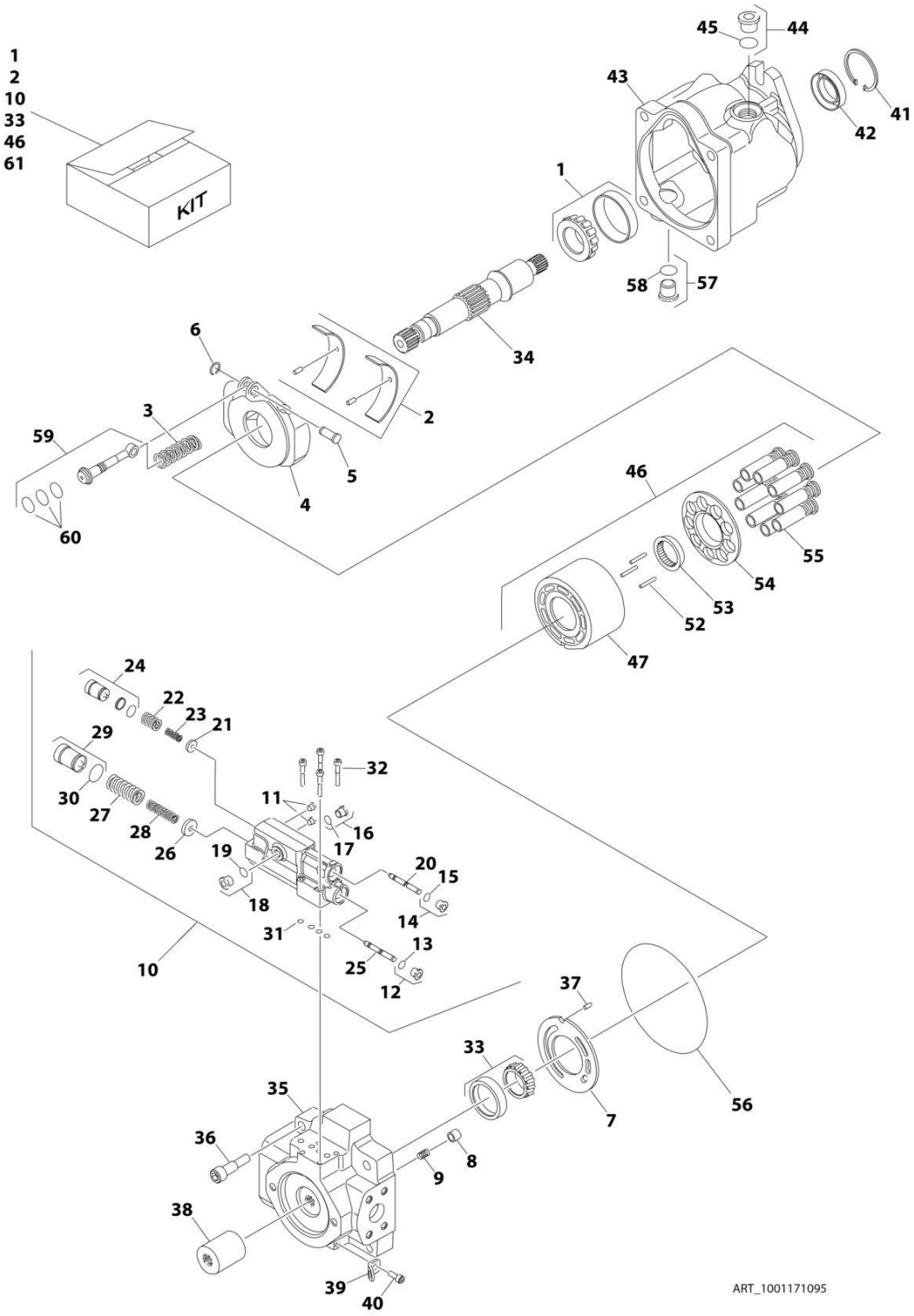

FIGURE 3-36. PUMP ASSEMBLY (SAUER PISTON)

ITEM	PART NUMBER	QTY	DESCRIPTION	REV
	1001171095	Ref	PUMP ASSEMBLY (SAUER PISTON)	B
1	70002578	1	Bearing Kit - Front (Includes Cup and Cone)	
2	70004426	1	Swash Plate Bearing Kit (Includes Qty 2 Bearings and Retainer Pins)	
3	70002580	1	Spring, Bias	
4	70004416	1	Swash Plate Assembly	
5	70002582	1	Shaft	
6	70002583	1	Ring, Retaining	
7	70004417	1	Plate, Valve	
8	70001956	1	Poppet, Check Valve	
9	70001955	1	Spring	
10	70022286	1	Control Kit (Includes Items 11-32)	
11	See Note	NSS	Setscrew (Note: Use Item 10)	
12	70002133	1	Plug Assembly (Includes Item 13)	
13	7007207	1	O-Ring (Part of Item 12)	
14	70002133	1	Plug Assembly (Part of Item 15)	
15	7007207	1	O-Ring (Part of Item 14)	
16	70002133	1	Plug Assembly (Includes Item 17)	
17	7007207	1	O-Ring (Part of Item 16)	
18	70002133	1	Plug Assembly (Includes Item 19)	
19	7007207	1	O-Ring (Part of Item 18)	
20	See Note	NSS	Spool (Note: Use Item 10)	
21	See Note	NSS	Guide, Spring LS (Note: Use Item 10)	
22	See Note	NSS	Spring, Outer LS (Note: Use Item 10)	
23	See Note	NSS	Spring, Inner LS (Note: Use Item 10)	
24	See Note	NSS	Plug, Adjusting LS (Note: Use Item 10 or 61)	
25	See Note	NSS	Spool, Control (Note: Use Item 10)	
26	See Note	NSS	Guide, Spring PC (Note: Use Item 10)	
27	See Note	NSS	Spring, Outer PC (Note: Use Item 10)	
28	See Note	NSS	Spring, Inner PC (Note: Use Item 10)	
29	See Note	NSS	Plug, Adjusting PC (Note: Use Item 10)	
30	See Note	NSS	O-Ring (Note: Use Item 10 or 61)	
31	See Note	NSS	Ring, Seal (Note: Use Item 10 or 61)	
32	See Note	NSS	Capscrew (Note: Use Item 10)	
33	70002585	1	Bearing Kit - Rear (Includes Cup and Cone)	
34	70002586	1	Shaft	
35	70004420	1	Cap, End	
36	70002588	4	Capscrew	
37	7007446	1	Pin, Slotted	
38	70002589	1	Coupling	
39	7022340	1	Bracket, Lifting	
40	70002590	1	Capscrew	
41	7023962	1	Ring, Retaining	
42	See Note	NSS	Seal, Lip (Note: Use Item 61)	
43	See Note	NSS	Housing (Note: Not Available for Purchase)	
44	7023964	1	Plug Assembly (Includes Item 45)	
45	7007415	1	O-Ring (Part of Item 44)	
46	70004423	1	Cylinder Block Kit (Includes Items 47-55)	
47	70004421	1	Cylinder	
52	7021275	3	Pin, Hold-down	

ITEM	PART NUMBER	QTY	DESCRIPTION	REV
53	70002592	1	Guide, Slipper Retainer	
54	70002593	1	Retainer, Slipper	
55	70004422	1	Piston Assembly	
56	See Note	NSS	Seal, End Cap (Note: Use Item 61)	
57	7023964	1	Plug, O-Ring (Includes Item 58)	
58	7007415	1	O-Ring (Part of Item 57)	
59	70005418	1	Servo Piston Assembly (Includes Item 60)	
60	See Note	NSS	Ring, Piston (Part of Item 59) (Note: Use Item 61)	
61	70002599	1	Complete Seal Kit (Includes Items 13, 15, 17, 19, 24, 30, 31, 42, 45, 56, 58 & 60)	

FIGURE 3-37. PUMP ASSEMBLY (SAUER GEAR)

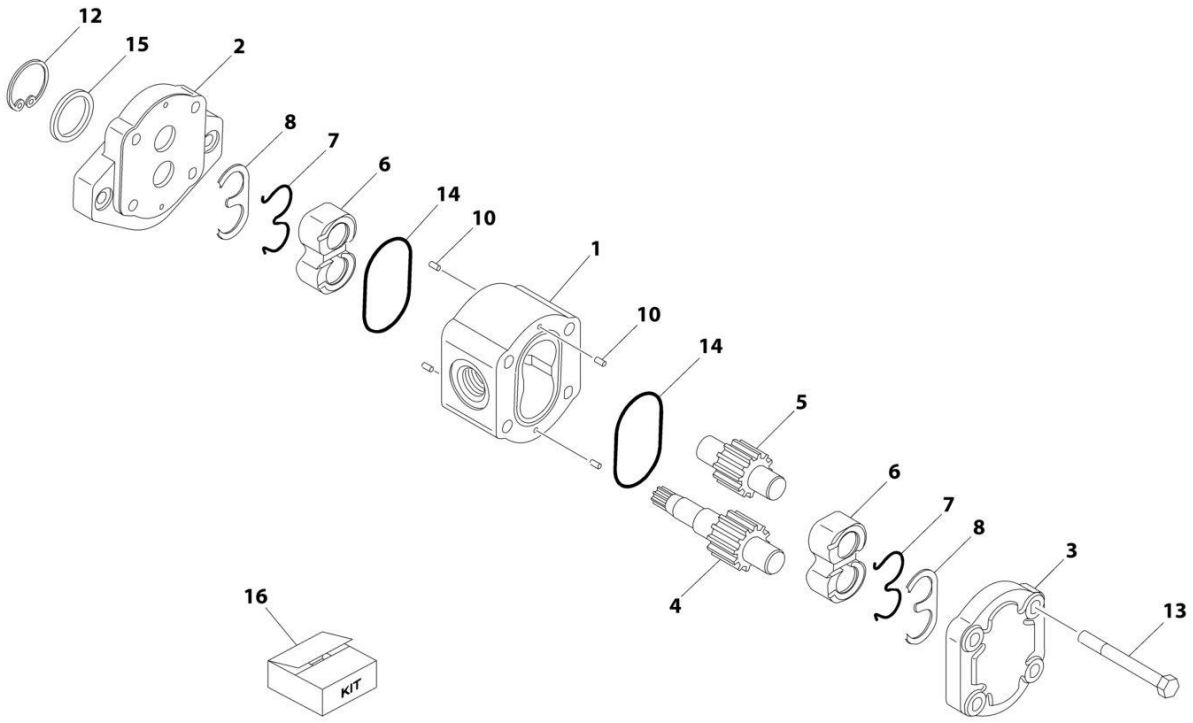

FIGURE 3-37. PUMP ASSEMBLY (SAUER GEAR)

ITEM	PART NUMBER	QTY	DESCRIPTION	REV
	1001112927	Ref	PUMP ASSEMBLY (SAUER GEAR)	A
1	See Note	NSS	Body (Note: Use p/n 1001112927)	
2	See Note	NSS	Cover, Front (Note: Use p/n 1001112927)	
3	See Note	NSS	Cover, Rear (Note: Use p/n 1001112927)	
4	See Note	NSS	Shaft, Gear (Note: Use p/n 1001112927)	
5	See Note	NSS	Gear, Idler (Note: Use p/n 1001112927)	
6	See Note	NSS	Block, Bearing (Note: Use p/n 1001112927)	
7	7007489	2	Ring, Anti-Extrusion	
8	7007489	2	Ring, Seal	
10	See Note	NSS	Pin, Dowel (Note: Use p/n 1001112927)	
12	70002576	1	Ring, Retaining	
13	See Note	NSS	Capscrew (Note: Use p/n 1001112927)	
14	7007489	2	O-Ring	
15	7007489	1	Seal, Lip	
16	7007489	1	Seal Kit - 1001112927 Pump (Includes Items 7, 8, 14 & 15)	

FIGURE 3-38. PUMP COUPLING KIT

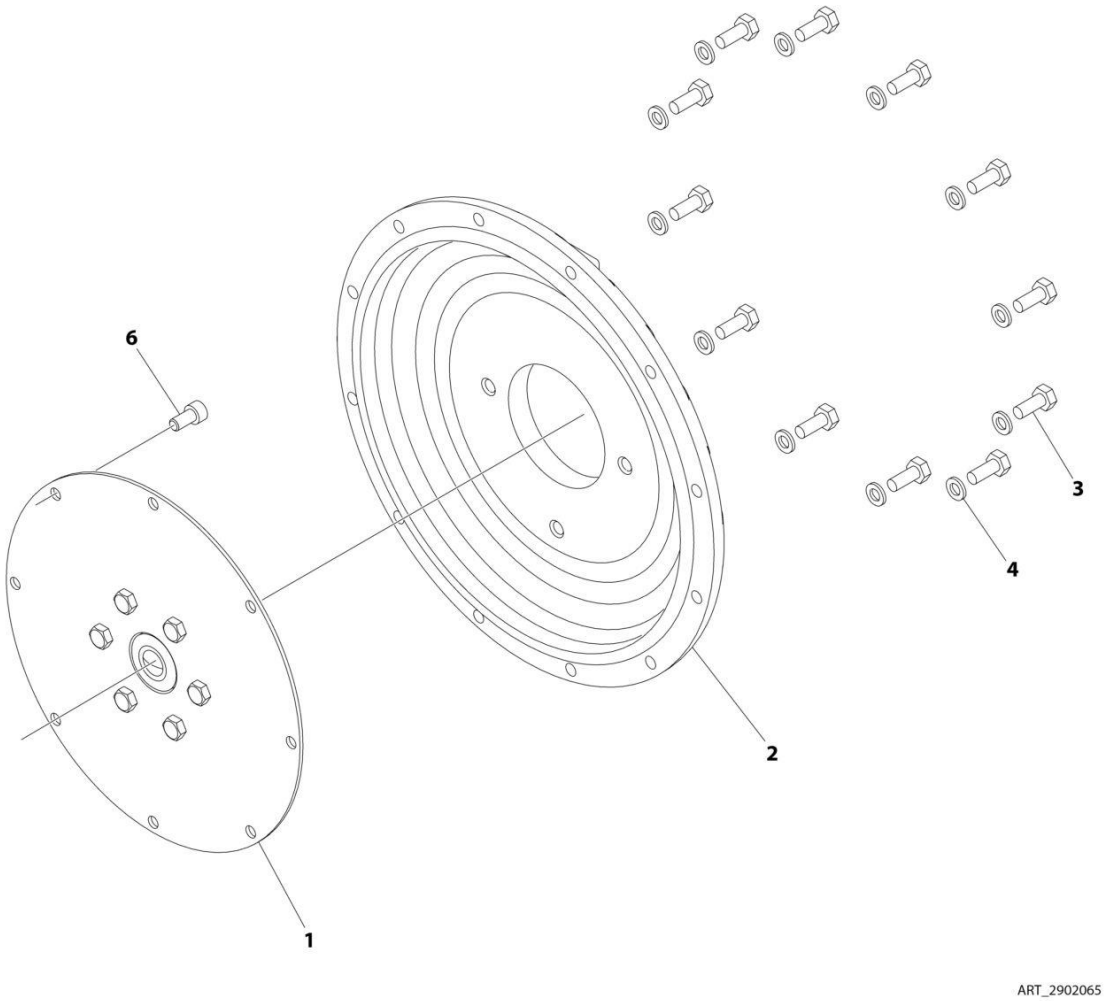

FIGURE 3-38. PUMP COUPLING KIT

ITEM	PART NUMBER	QTY	DESCRIPTION	REV
	2902065	Ref	PUMP COUPLING KIT	L
1	70000793	1	Coupling, Hayes	
2	See Note	NSS	Plate, Pump Adapter (Note: Use p/n 2902065)	
3	See Note	NSS	Bolt M10 x 30 Grade 10.9 (Note: Use p/n 2902065)	
4	See Note	NSS	Washer M10 (Note: Use p/n 2902065)	
6	See Note	NSS	Bolt M10 x 20 Grade 10.9 (Note: Use p/n 2902065)	

FIGURE 3-39. FUEL PUMP/FILTER BRACKET ASSEMBLY - DEUTZ TCD2.9L4 ENGINE AND DEUTZ TCD2.9L4 (STAGE V) ENGINE

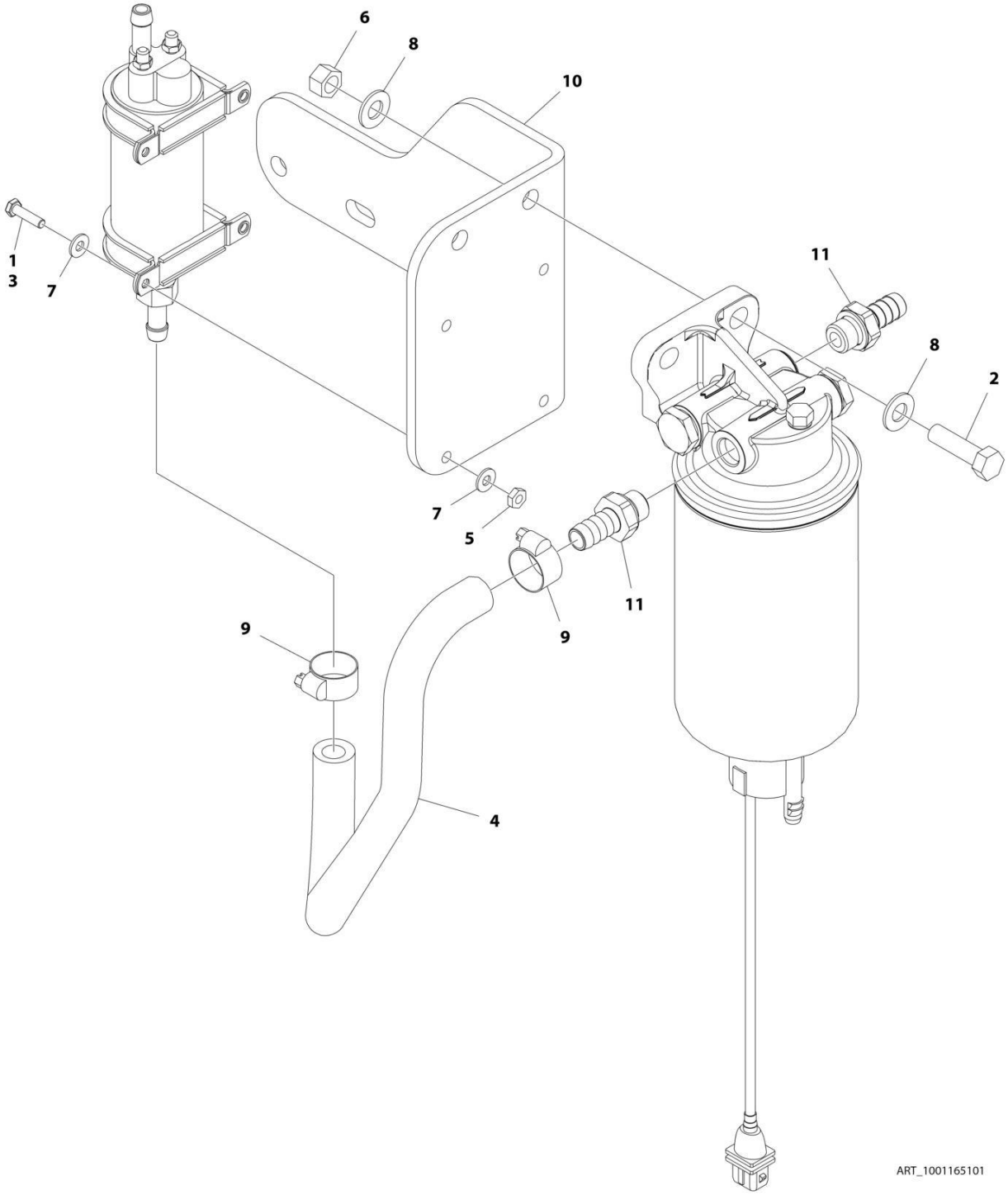

FIGURE 3-39. FUEL PUMP/FILTER BRACKET ASSEMBLY - DEUTZ TCD2.9L4 ENGINE AND DEUTZ TCD2.9L4 (STAGE V) ENGINE

ITEM	PART NUMBER	QTY	DESCRIPTION	REV
	1001165101	Ref	FUEL PUMP/FILTER BRACKET ASSEMBLY - DEUTZ TCD2.9L4 ENGINE AND DEUTZ TCD2.9L4 (STAGE V PRE-BUY) ENGINE	C
1	0100011	AR	Compound, Locking	
2	0641611	2	Bolt 3/8 x 1-3/8	
3	0721006	4	Bolt #10 x 3/4	
4	1001154405	1.5 ft /0.4m	Hose	
5	3311001	4	Nut #10	
6	3311605	2	Nut 3/8	
7	4711000	8	Washer #10	
8	4711600	4	Washer 3/8	
9	8405006	2	Clamp	
10	1001140222	1	Bracket, Fuel Pump Mounting	
11	1001141718	1	Fitting, Barbed	

FIGURE 3-40. BREATHER HEATER INST (DEUTZ TD2.9L4 ENGINES AND DEUTZ TCD2.9L4 (STAGE V) ENGINES)

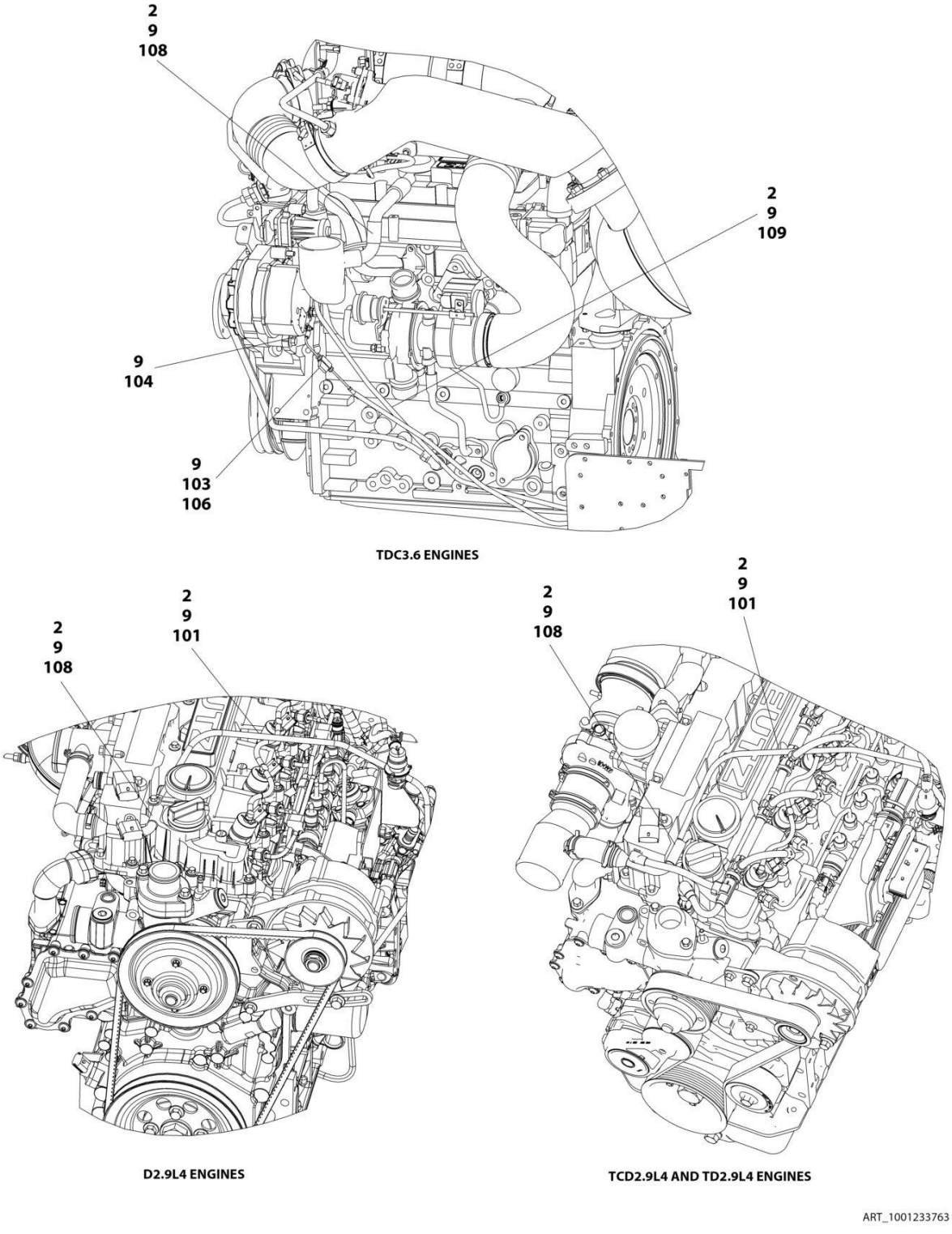

FIGURE 3-40. BREATHER HEATER INST (DEUTZ TD2.9L4 ENGINES AND DEUTZ TCD2.9L4 (STAGE V) ENGINES)

ITEM	PART NUMBER	QTY	DESCRIPTION	REV
	1001233763	Ref	BREATHER HEATER INSTALLATION - DEUTZ ENGINES	D
2	4240099	AR	Tie-Strap	
9	1001243895	1	Breather Heater Harness	C
101	2820035	AR	Insulation	
103	2400060	1	Fuseholder with Cover	
104	4460043	1	Terminal, Ring	
105	4460722	1	Terminal, Ring (Not Shown)	
106	1001196634	1	Fuse - 2 Amp	
108	1001232842	1	Breather Heater Kit	

FIGURE 3-41. WATER/FUEL SEPARATOR INSTALLATION - DEUTZ TD2011 ENGINE

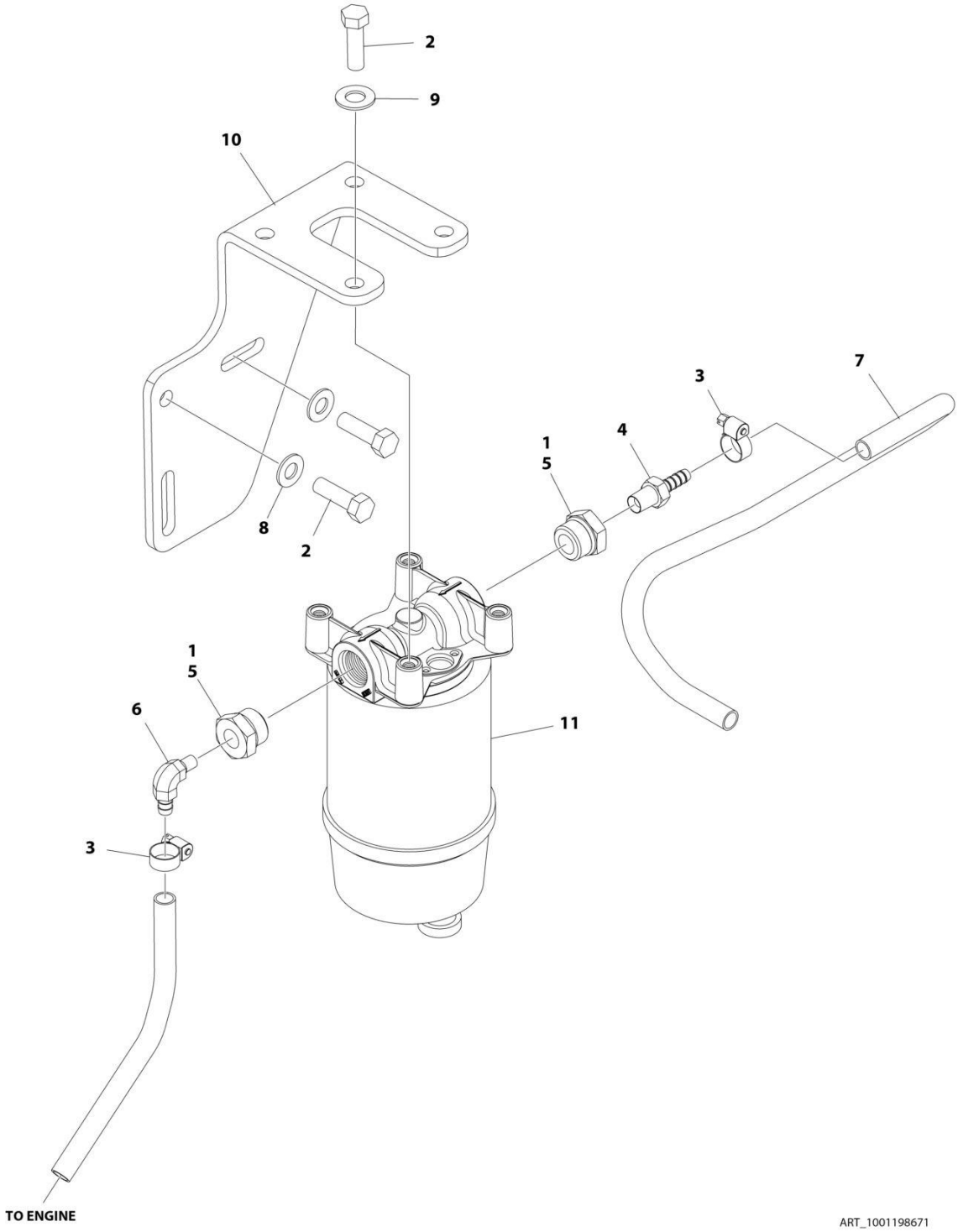

FIGURE 3-41. WATER/FUEL SEPARATOR INSTALLATION - DEUTZ TD2011 ENGINE

ITEM	PART NUMBER	QTY	DESCRIPTION	REV
	1001198671	Ref	WATER/FUEL SEPARATOR INSTALLATION - DEUTZ TD2011 ENGINE	A
1	0100079	AR	Sealant, Pipe	
2	0641610	6	Bolt 3/8 x 1-1/4	
3	1320022	2	Clamp	
4	2180348	1	Fitting, Barbed	
5	2220816	2	Fitting, Adapter FNPTF/ORB	
6	2221046	1	Fitting, 90 Elbow	
7	2720058	4.5 ft /1.37m	Hose	
8	4711600	2	Washer 3/8	
9	4711700	4	Washer 7/16	
10	1001188885	1	Bracket, Water/Fuel	
11	1001188887	1	Filter Water/Fuel	
11	1001202280	1	Filter, Head	
11	1001202281	1	Filter, Element	

FIGURE 3-42. SPARK ARRESTING CATALYTIC MUFFLER - DEUTZ TD2011 ENGINES (OPTIONAL)

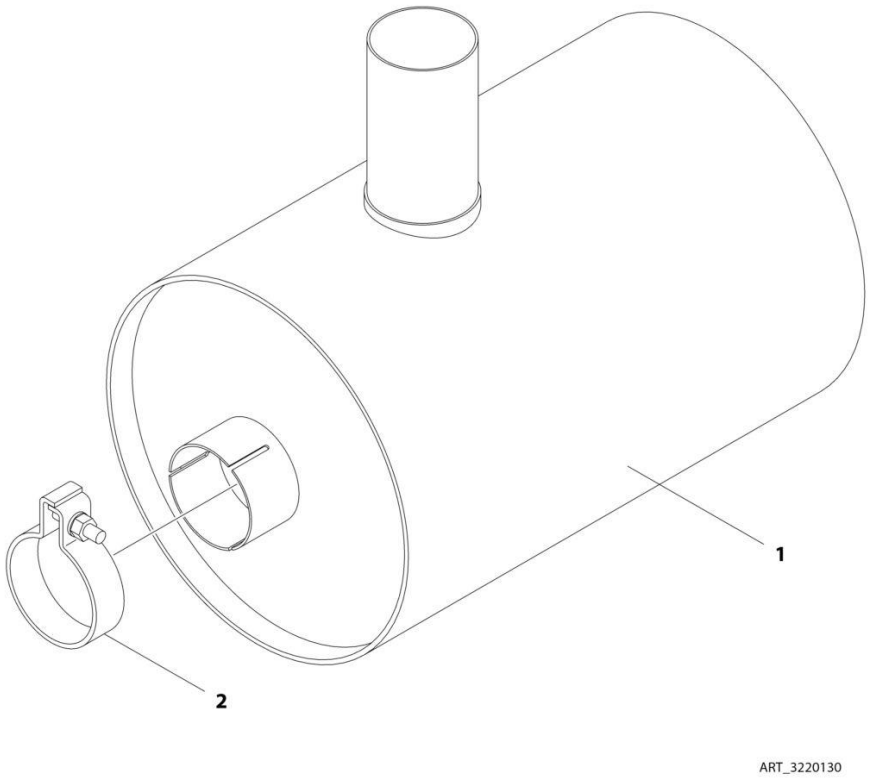

FIGURE 3-42. SPARK ARRESTING CATALYTIC MUFFLER - DEUTZ TD2011 ENGINES (OPTIONAL)

ITEM	PART NUMBER	QTY	DESCRIPTION	REV
	3220130	Ref	SPARK ARRESTING CATALYTIC MUFFLER - DEUTZ TD2011 ENGINES	A
1	See Note	NSS	Muffler (Note: Use p/n 3220130)	
2	70001017	1	Clamp	

FIGURE 3-43. 2500W GENERATOR INSTALLATION - DEUTZ TD2011 ENGINES (OPTIONAL)

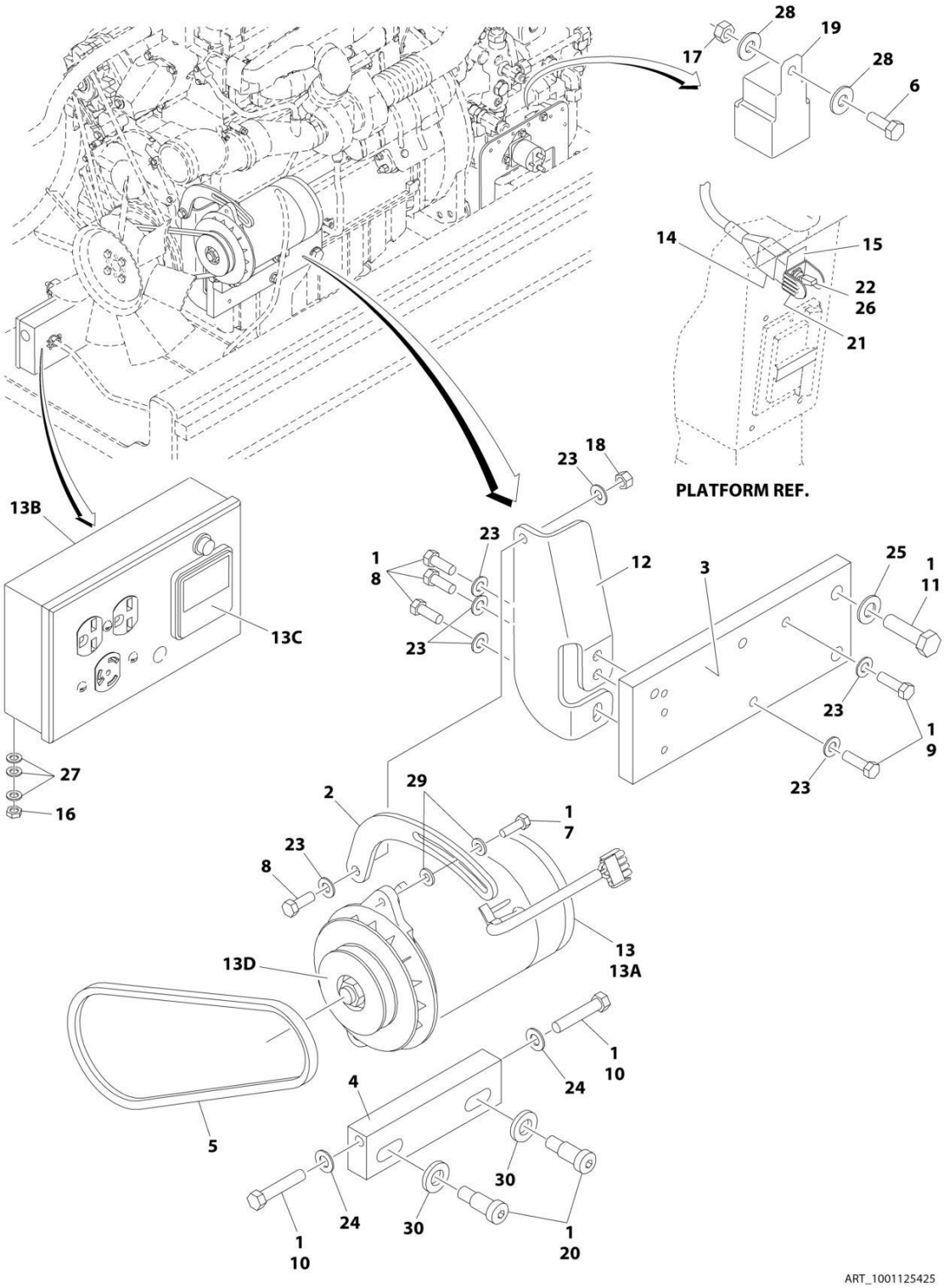

FIGURE 3-43. 2500W GENERATOR INSTALLATION - DEUTZ TD2011 ENGINES (OPTIONAL)

ITEM	PART NUMBER	QTY	DESCRIPTION	REV
	1001125425	Ref	2500W GENERATOR INSTALLATION - 60HZ SPEC (DEUTZ TD2011 ENGINES)	A
1	0100011	AR	Compound, Locking	
2	0200742	1	Arm, Adjusting	
3	0363081	1	Bar, Mounting	
4	0363082	1	Bar, Adjusting	
5	0480127	1	Belt	
6	0641406	1	Bolt 1/4 x 3/4	
7	0641508	1	Bolt 5/16 x 1	
8	0641608	4	Bolt 3/8 x 1	
9	0641610	2	Bolt 3/8 x 1-1/4	
10	0641718	2	Bolt 7/16 x 2-1/14	
11	0701418	2	Bolt M14 x 50	
12	0902813	1	Bracket, Arm Mounting	
13	2460055	1	Generator, 110V/60Hz	
13A	7012558	1	Generator 110V/60Hz	
		Ref	Note: Replacement generators come standard with p/n 3580134 pulley. This pulley may not be correct for all applications. Refer to pulley options below for correct pulley.	
13A	7012513	4	Cap, Brush Holder	
13A	7020108	4	Brush	
13A	7020109	4	Holder, Brush	
13A	7012514	1	Fan	
13A	7020190	2	Bearing	
13A	7020110	1	End Bell, Front	
13A	7020111	1	End Bell, Rear	
13B	7019680	1	Box Control	
13B	4360542	1	Breaker, Circuit	
13B	4460190	AR	Receptacle, Double (110V)	
13B	4460027	AR	Receptacle, Double Twist Lock (110V)	
13B	70000124	1	Receptacle, Double (220V)	
13B	70000125	1	Receptacle, Single Twist Lock (220V)	
13C	2420203	1	Voltmeter	
13D	3580276	1	Pulley	
13D	7027887	1	Key, Woodruff	
14	2820031	AR	Heat Shrink	
15	3251102	1	Nameplate - Generator	
16	3311005	2	Nut #10	
17	3311405	1	Nut 1/4	
18	3311605	1	Nut 3/8	
19	3740080	1	Relay	
20	3900322	2	Screw, Socket Head Shoulder	
21	4060802	1	Guard, Switch	
22	4360336	1	Switch, Toggle	
23	4711600	7	Washer 3/8	
24	4711700	2	Washer 7/16	
25	4711900	2	Washer 9/16	
26	4740397	1	Spacer	
27	4751000	6	Washer #10	
28	4751400	2	Washer 1/4	

ITEM	PART NUMBER	QTY	DESCRIPTION	REV
29	4891500	2	Washer 5/16	
30	4892000	2	Washer 5/8	

FIGURE 3-44. 4000W GENERATOR INSTALLATION - 60HZ SPEC (DEUTZ TD2011 ENGINES)

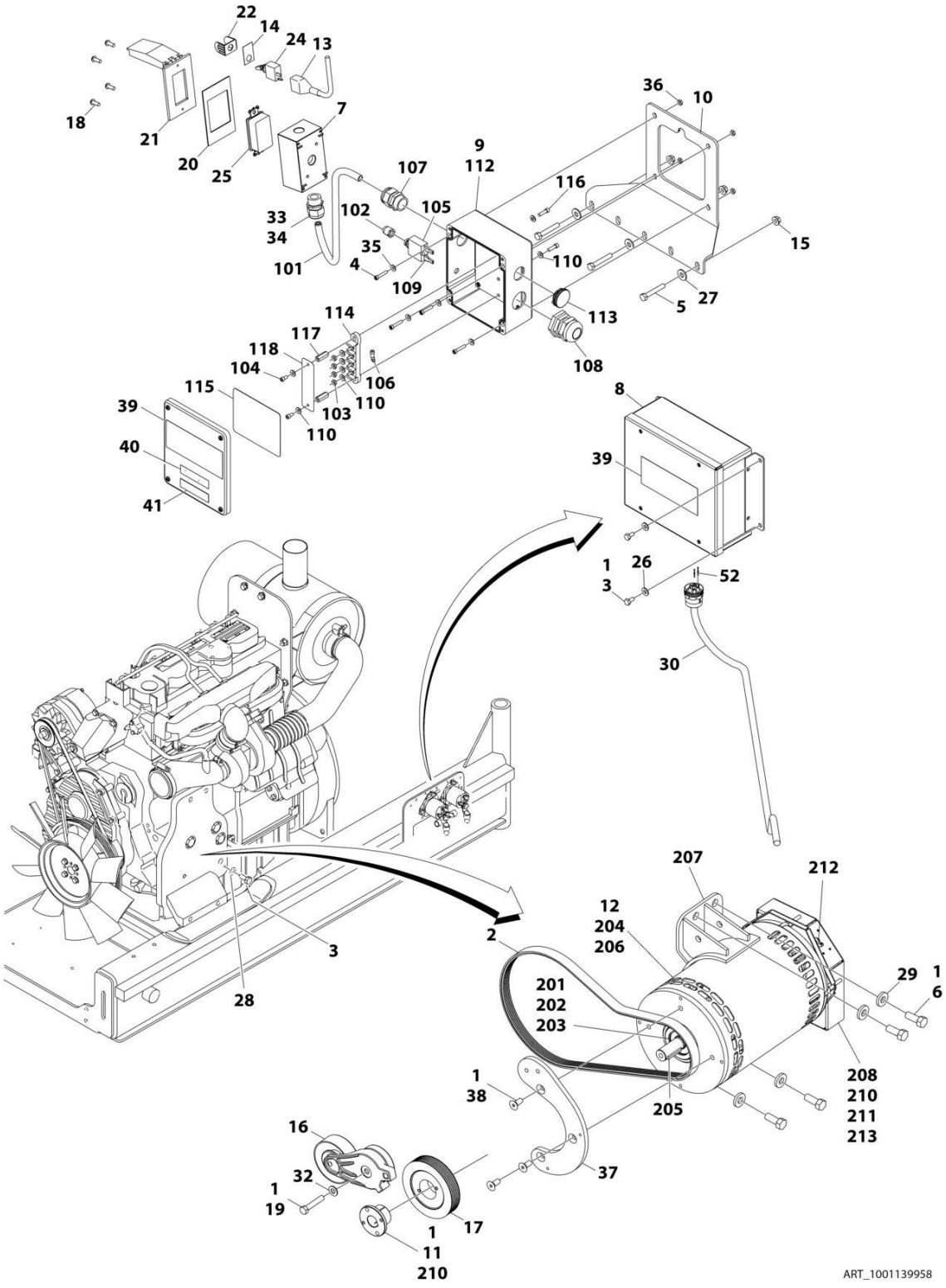

FIGURE 3-44. 4000W GENERATOR INSTALLATION - 60HZ SPEC (DEUTZ TD2011 ENGINES)

ITEM	PART NUMBER	QTY	DESCRIPTION	REV
	1001139958	Ref	4000W GENERATOR INSTALLATION - 60HZ SPEC (DEUTZ TD2011 ENGINES)	B
		Ref	Note: See ELECTRICAL SECTION for Boom Cable Installation.	
1	0100011	AR	Compound, Locking	
2	0480128	1	Belt, Generator	
3	0641404	5	Bolt 1/4 x 1/2	
4	3931016	4	Screw 1/4 x 1	
5	0641516	3	Bolt 5/16 x 2	
6	0641810	4	Bolt 1/2 x 1-1/4	
7	0860038	1	Box, Switch-Weatherhead	
8	1001138566	1	Box, Generator Control	
8	70006552	1	Capacitor	
8	70006553	1	Relay	
9	1001152457	1	Box, Junction Assembly (See Items 101-118 for Breakdown)	
10	0902888	1	Bracket, Generator Junction Box	
11	0962520	1	Bushing, Taper	
12	1001129858	1	Generator, 4000W Assembly (See Items 200-213 for Breakdown)	
13	2820031	AR	Insulator, Heat Shrink	
14	3251102	1	Nameplate, Generator	
15	3311508	3	Nut 5/16	
16	3580317	1	Pulley, Belt Tensioner	
17	3580318	1	Pulley, Generator	
18	3910606	4	Screw 6 x 3/8	
19	0641616	AR	Bolt 3/8 x 2	
20	3960422	1	Gasket, AC Receptacle	
21	1001110873	1	Cover, Gang Vertical Receptacle GFCI	
22	4060802	1	Guard, Switch	
23	4240018	AR	Strap, Tie (Not Shown)	
24	4360336	1	Switch, Toggle	
25	4460346	1	Terminal, Receptacle	
26	4711400	4	Washer 1/4	
27	4751500	3	Washer 5/16	
28	4791400	2	Starwasher 1/4	
29	4891800	4	Washer 1/2	
30	1001152533	1	Harness, Generator Cable (See Separate Breakdown in ELECTRICAL SECTION)	
31	1001153257	1	Diagram, Generator Wiring (Not Shown)	
32	4711600	1	Washer 3/8	
33	0100020	AR	Sealant, Pipe	
34	4460071	1	Connector, Strain Relief	
35	4751000	4	Washer #10	
36	3311005	4	Nut #10	
37	1001139357	1	Mount, Generator Tensioner	
38	0741607	3	Screw 3/8 x 0.88	
39	1705387	3	Decal - Hazardous Voltage	
40	3251243	1	Decal - 120V-60Hz	
41	1705374	1	Decal - 240V-60Hz	
52	0100048	AR	Grease, Dielectric	
	1001152457	Ref	JUNCTION BOX ASSEMBLY	B

SECTION 3 - ENGINE

ITEM	PART NUMBER	QTY	DESCRIPTION	REV
101	1001179154	2.5 ft/ 0.8m	Cable, 12/3	
102	3300396	1	Cover, Fuse	
103	3311001	4	Nut #10 Grade 2	
104	3900300	2	Screw, Spec, Cap	
105	4360070	1	Circuit Breaker, 15Amp	
106	4460068	3	Terminal, Ring	
107	4460425	1	Terminal, Strain Relief	
108	4460426	1	Connector, Strain Relief	
109	4460483	2	Terminal	
110	4711000	8	Washer #10	
112	1001152456	1	Box, Junction	
113	1001152525	1	Plug, Hole Pluggit	
114	1001152530	1	Terminal, Block, 4 Pole	
115	1001153260	1	Decal - Wiring 4000W Generator	
116	3900267	2	Screw, Spec, Cap	
117	1001158008	2	Stand-Off, Female, Threaded	
118	1001158363	1	Plate, Cover, PVC	
	1001129858	Ref	4000W GENERATOR ASSEMBLY	
201	70003709	1	Ring, Retaining	
202	70003708	1	Ring, Retaining	
203	70001966	1	Bearing, Ball	
204	70004092	1	Endbell	
205	70004171	1	Key	
206	70004676	1	Rotor Assembly	
207	70004684	1	Stator, Generator 4000W	
208	70004678	1	Endbell	
210	70004680	1	Enclosure	
211	70004685	1	Cover, Enclosure	
212	70004682	1	Protector, Supplementary, Manual Reset	
213	70004098	1	Bushing, Strain Relief	

FIGURE 3-45. 4000W GENERATOR INSTALLATION - 50HZ SPEC (DEUTZ TD2011 ENGINES)

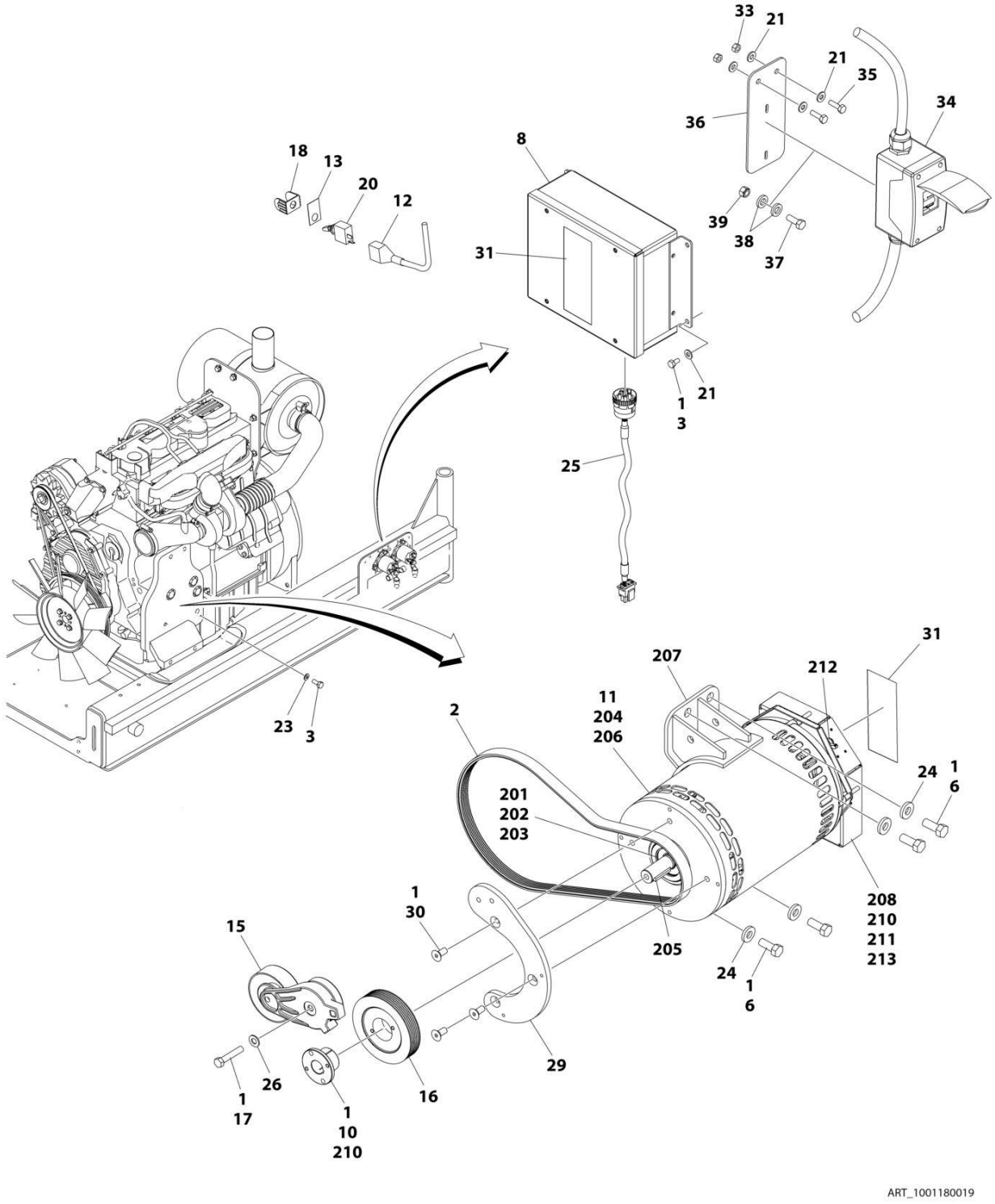

FIGURE 3-45. 4000W GENERATOR INSTALLATION - 50HZ SPEC (DEUTZ TD2011 ENGINES)

ITEM	PART NUMBER	QTY	DESCRIPTION	REV
	1001180019	Ref	4000W GENERATOR INSTALLATION - 50HZ SPEC (DEUTZ TD2011 ENGINES)	C
		Ref	Note: See ELECTRICAL SECTION for Boom Cable Installation.	
1	0100011	AR	Compound, Locking	
2	1001136356	1	Belt, Generator	
3	0641404	5	Bolt 1/4 x 1/2	
6	0641810	4	Bolt 1/2 x 1-1/4	
8	1001138566	1	Box, Generator Control	
8	70006552	1	Capacitor	
8	70006553	1	Relay	
10	0962520	1	Bushing, Taper	
11	1001138565	1	Generator, 4000W Assembly (See Items 200-213 for Breakdown)	
12	2820031	AR	Insulator, Heat Shrink	
13	3251102	1	Nameplate, Generator	
15	3580317	1	Pulley, Belt Tensioner	
16	3580319	1	Pulley, Generator	
17	0641616	AR	Bolt 3/8 x 2	
18	4060802	1	Guard, Switch	
19	4240018	AR	Strap, Tie (Not Shown)	
20	4360336	1	Switch, Toggle	
21	4711400	8	Washer 1/4	
23	4791400	2	Starwasher 1/4	
24	4891800	4	Washer 1/2	
25	1001152533	1	Harness, Generator Cable (See Separate Breakdown in ELECTRICAL SECTION)	
26	4711600	1	Washer 3/8	
29	1001139357	1	Mount, Generator Tensioner	
30	0741607	3	Screw 3/8 x 0.88	
31	1705489	AR	Decal - Hazardous Voltage	
33	3311405	2	Nut 1/4 Grade 2	
34	1001165368	1	Kit, Box and Breaker (See Separate Breakdown in ELECTRICAL SECTION)	
35	0641407	2	Bolt 1/4 x 7/8	
36	1001096172	1	Bracket	
37	4010408	2	Screw M4 x 16	
38	1001091102	4	Washer M4	
39	3290405	2	Nut M4	
	1001138565	Ref	4000W GENERATOR ASSEMBLY	
201	70003709	1	Ring, Retaining	
202	70003708	1	Ring, Retaining	
203	70001966	1	Bearing, Ball	
204	70004092	1	Endbell	
205	70004171	1	Key	
206	70004676	1	Rotor Assembly	
207	70004677	1	Stator, Generator 4000W	
208	70004678	1	Endbell	
210	70004680	1	Enclosure	
211	70004681	1	Cover, Enclosure	
212	70004682	1	Protector, Supplementary, Manual Reset	
213	70004683	1	Bushing, Strain Relief	

FIGURE 3-46. 4000W GENERATOR INSTALLATION - 60HZ SPEC (DEUTZ TCD2.9L4 ENGINES)

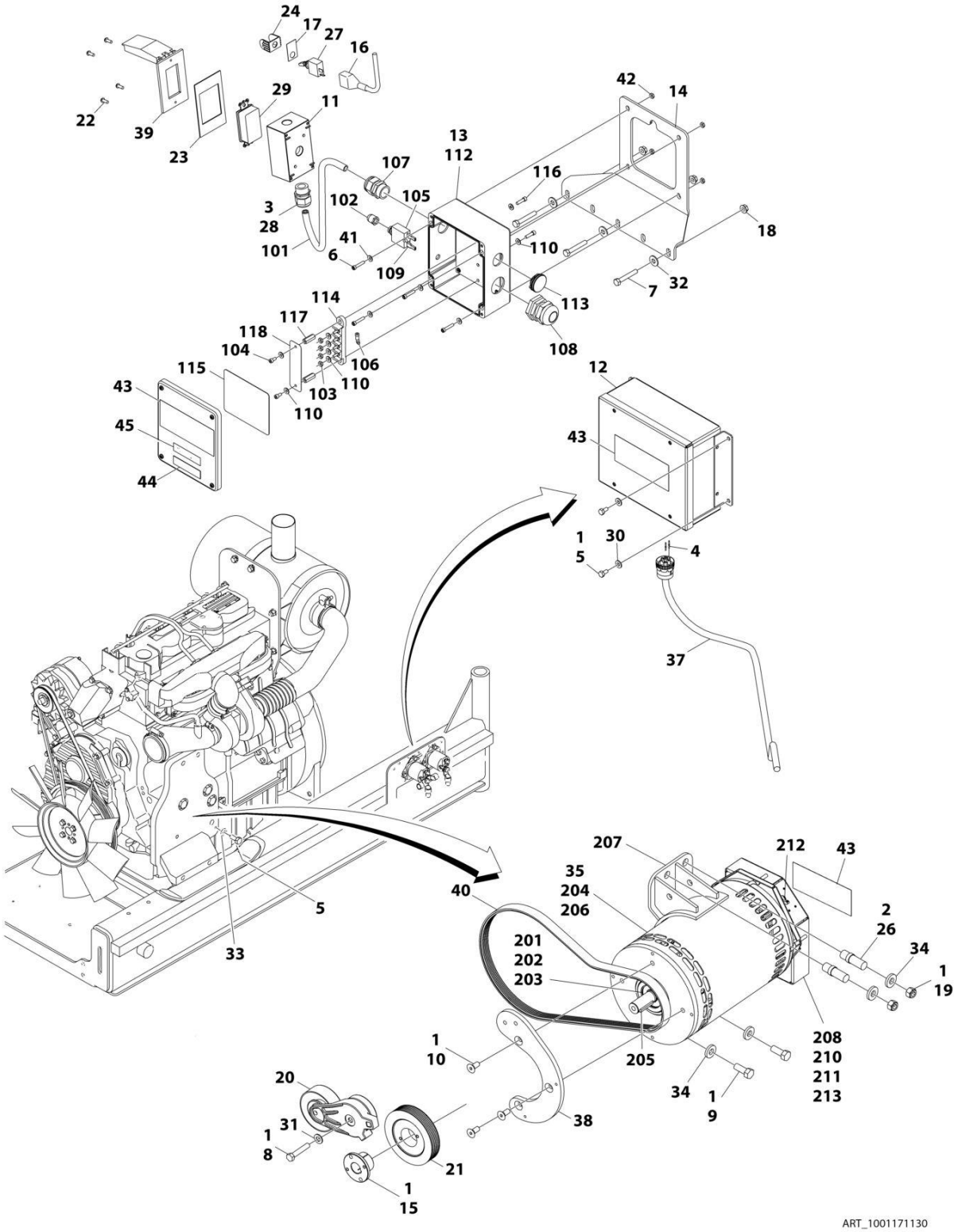

FIGURE 3-46. 4000W GENERATOR INSTALLATION - 60HZ SPEC (DEUTZ TCD2.9L4 ENGINES)

ITEM	PART NUMBER	QTY	DESCRIPTION	REV
	1001171130	Ref	4000W GENERATOR INSTALLATION - 60HZ SPEC (DEUTZ TCD2.9L4 ENGINES)	B
		Ref	Note: See ELECTRICAL SECTION for Boom Cable Installation.	
1	0100011	AR	Compound, Locking	
2	0100019	AR	Compound, Locking	
3	0100020	AR	Sealant, Pipe	
4	0100048	AR	Grease, Dielectric	
5	0641404	5	Bolt 1/4 x 1/2	
6	3931016	4	Screw 1/4 x 1	
7	0641516	3	Bolt 5/16 x 2	
8	0641618	1	Bolt 3/8 x 2-1/4	
9	0641810	2	Bolt 1/2 x 1-1/4	
10	0741607	3	Screw 3/8 x 0.88	
11	0860038	1	Box, Switch-Weatherhead	
12	1001138566	1	Box, Generator Control	
12	70006552	1	Capacitor	
12	70006553	1	Relay	
13	1001152457	1	Box, Junction Assembly (See Items 101-118 for Breakdown)	
14	0902888	1	Bracket, Generator Junction Box	
15	0962520	1	Bushing, Taper	
16	2820031	AR	Insulator, Heat Shrink	
17	3251102	1	Nameplate, Generator	
18	3311508	3	Nut 5/16	
19	3311801	2	Nut 1/2	
20	3580317	1	Pulley, Belt Tensioner	
21	3580318	1	Pulley, Generator	
22	3910606	4	Screw 6 x 3/8	
23	3960422	1	Gasket, AC Receptacle	
24	4060802	1	Guard, Switch	
25	4240018	AR	Strap, Tie (Not Shown)	
26	4300157	2	Stud	
27	4360336	1	Switch, Toggle	
28	4460071	1	Connector, Strain Relief	
29	4460346	1	Terminal, Receptacle	
30	4711400	4	Washer 1/4	
31	4711600	1	Washer 3/8	
32	4751500	3	Washer 5/16	
33	4791400	2	Starwasher 1/4	
34	4891800	4	Washer 1/2	
35	1001140344	1	Generator, 4000W Assembly (See Items 200-213 for Breakdown)	
36	1001153257	1	Diagram, Generator Wiring (Not Shown)	
37	1001152533	1	Harness, Generator Cable (See Separate Breakdown in ELECTRICAL SECTION)	
38	1001138011	1	Mount, Generator Tensioner	
39	1001110873	1	Cover, Gang Vertical Receptacle GFCI	
40	1001142645	1	Belt, Generator	
41	4751000	4	Washer #10	
42	3311005	4	Nut 10	
43	1705387	3	Decal - Hazardous Voltage	
44	1705374	1	Decal - 240V-60Hz	

SECTION 3 - ENGINE

ITEM	PART NUMBER	QTY	DESCRIPTION	REV
45	3251243	1	Decal - 120V-60Hz	
	1001152457	Ref	JUNCTION BOX ASSEMBLY	B
101	1001179154	2.5 ft/ 0.8m	Cable, Electrical 12/3	
102	3300396	1	Cover, Fuse	
103	3311001	4	Nut 10 Grade 2	
104	3900300	2	Screw, Spec, Cap	
105	4360070	1	Circuit Breaker, 15Amp	
106	4460068	3	Terminal, Ring	
107	4460425	1	Terminal, Strain Relief	
108	4460426	1	Connector, Strain Relief	
109	4460483	2	Terminal	
110	4711000	AR	Washer #10	
112	1001152456	1	Box, Junction	
113	1001152525	1	Plug, Hole Pluggit	
114	1001152530	1	Terminal, Block, 4 Pole	
115	1001153260	1	Decal - Wiring 4000W Generator	
116	3900267	2	Screw, Spec, Cap	
117	1001158008	2	Stand-Off, Female, Threaded	
118	1001158363	1	Plate, Cover, PVC	
	1001140346	Ref	4000W GENERATOR ASSEMBLY	
201	70003709	1	Ring, Retaining	
202	70003708	1	Ring, Retaining	
203	70001966	1	Bearing, Ball	
204	70004092	1	Endbell	
205	70004099	1	Key	
206	70004676	1	Rotor Assembly	
207	70004687	1	Stator, Generator 4000W	
208	70004678	1	Endbell	
210	70004680	1	Enclosure	
211	70004685	1	Cover, Enclosure	
212	70004682	1	Protector, Supplementary, Manual Reset	
213	70004098	1	Bushing, Strain Relief	

FIGURE 3-47. 4000W GENERATOR INSTALLATION - 50HZ SPEC (DEUTZ TCD2.9L4 ENGINES AND DEUTZ TCD2.9L4 (STAGE V) ENGINES)

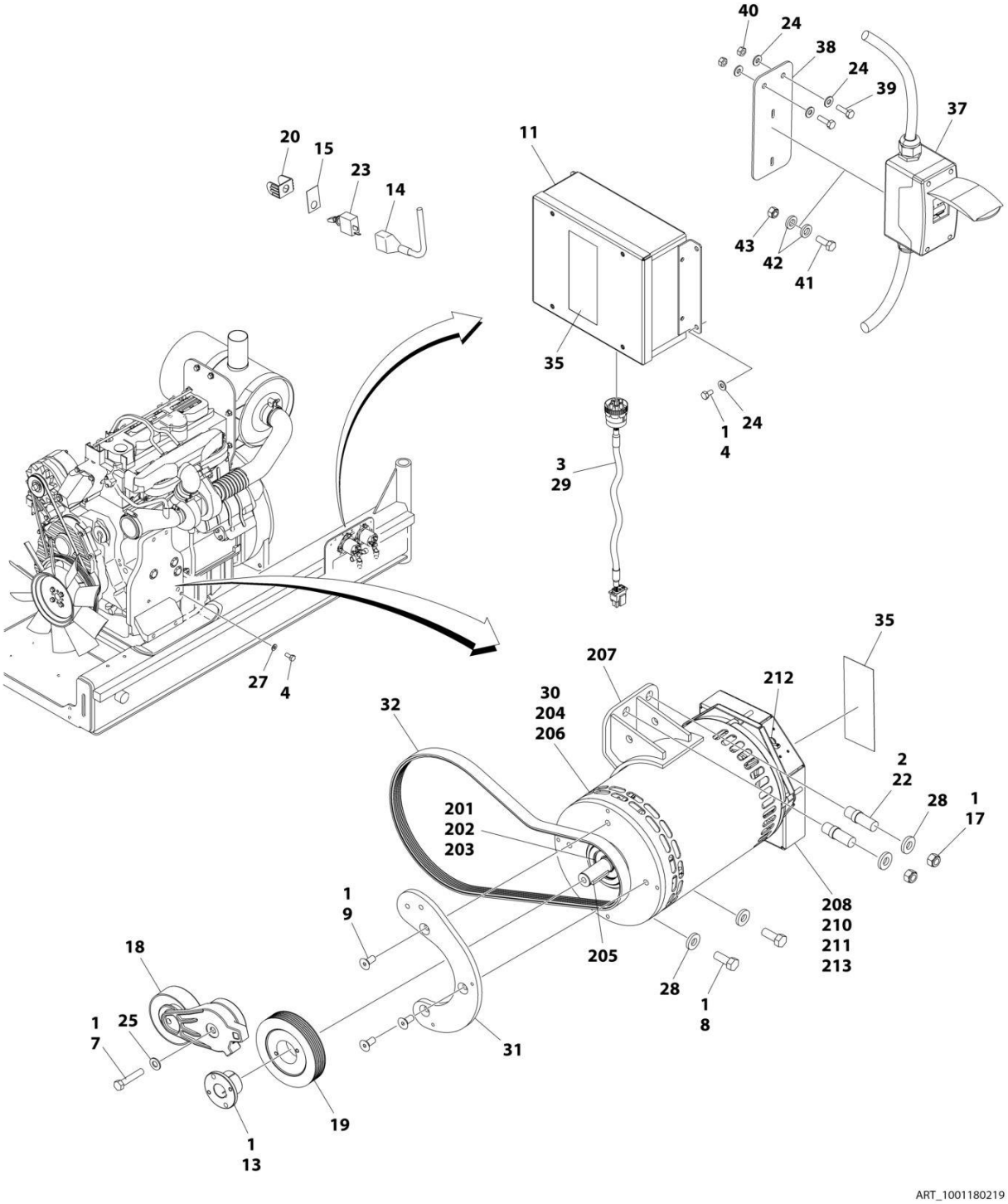

FIGURE 3-47. 4000W GENERATOR INSTALLATION - 50HZ SPEC (DEUTZ TCD2.9L4 ENGINES AND DEUTZ TCD2.9L4 (STAGE V) ENGINES)

ITEM	PART NUMBER	QTY	DESCRIPTION	REV
	1001180219	Ref	4000W GENERATOR INSTALLATION - 50HZ SPEC (DEUTZ TCD2.9L4 ENGINES)	C
		Ref	Note: See ELECTRICAL SECTION for Boom Cable Installation.	
1	0100011	AR	Compound, Locking	
2	0100019	AR	Compound, Locking	
3	0100048	AR	Grease, Dielectric	
4	0641404	5	Bolt 1/4 x 1/2	
7	0641618	1	Bolt 3/8 x 2-1/4	
8	0641810	2	Bolt 1/2 x 1-1/4	
9	0741607	3	Screw 3/8 x 0.88	
11	1001138566	1	Box, Generator Control	
11	70006552	1	Capacitor	
11	70006553	1	Relay	
13	0962520	1	Bushing, Taper	
14	2820031	AR	Insulator, Heat Shrink	
15	3251102	1	Nameplate, Generator	
17	3311801	2	Nut 1/2	
18	3580317	1	Pulley, Belt Tensioner	
19	3580319	1	Pulley, Generator	
20	4060802	1	Guard, Switch	
21	4240018	AR	Strap, Tie (Not Shown)	
22	4300157	2	Stud	
23	4360336	1	Switch, Toggle	
24	4711400	8	Washer 1/4	
25	4711600	1	Washer 3/8	
27	4791400	2	Starwasher 1/4	
28	4891800	4	Washer 1/2	
29	1001152533	1	Harness, Generator Cable (See Separate Breakdown in ELECTRICAL Section)	
30	1001140397	1	Generator, 4000W Assembly (See Items 200-213 for Breakdown)	
31	1001138011	1	Mount, Generator Tensioner	
32	1001136357	1	Belt, Generator	
35	1705489	AR	Decal - Hazardous Voltage	
37	1001165368	1	Kit, Box and Breaker (See Separate Breakdown in ELECTRICAL Section)	
38	1001096172	1	Bracket	
39	0641406	2	Bolt 1/4 x 3/4	
40	3311405	2	Nut 1/4 Grade 2	
41	4010408	2	Screw M4 x 16	
42	1001091102	4	Washer M4	
43	3290405	2	Nut M4	
	1001140347	Ref	4000W GENERATOR ASSEMBLY	
201	70003709	1	Ring, Retaining	
202	70003708	1	Ring, Retaining	
203	70001966	1	Bearing, Ball	
204	70004092	1	Endbell	
205	70004099	1	Key	
206	70004676	1	Rotor Assembly	
207	70004686	1	Stator, Generator 4000W	

SECTION 3 - ENGINE

ITEM	PART NUMBER	QTY	DESCRIPTION	REV
208	70004678	1	Endbell	
210	70004680	1	Enclosure	
211	70004681	1	Cover, Enclosure	
212	70004682	1	Protector, Supplementary, Manual Reset	
213	70004683	1	Bushing, Strain Relief	
214	4460224	1	Connector - 6 Position (50Hz) (Not Shown - Located on Enclosure Cover)	
214	4460294	2	Pin, Male (50Hz) (Not Shown - Located on Enclosure Cover)	

FIGURE 3-48. 7500W SKYPOWER GENERATOR INSTALLATION - 60HZ SPEC (DEUTZ TD2011 ENGINES) (OPTIONAL)

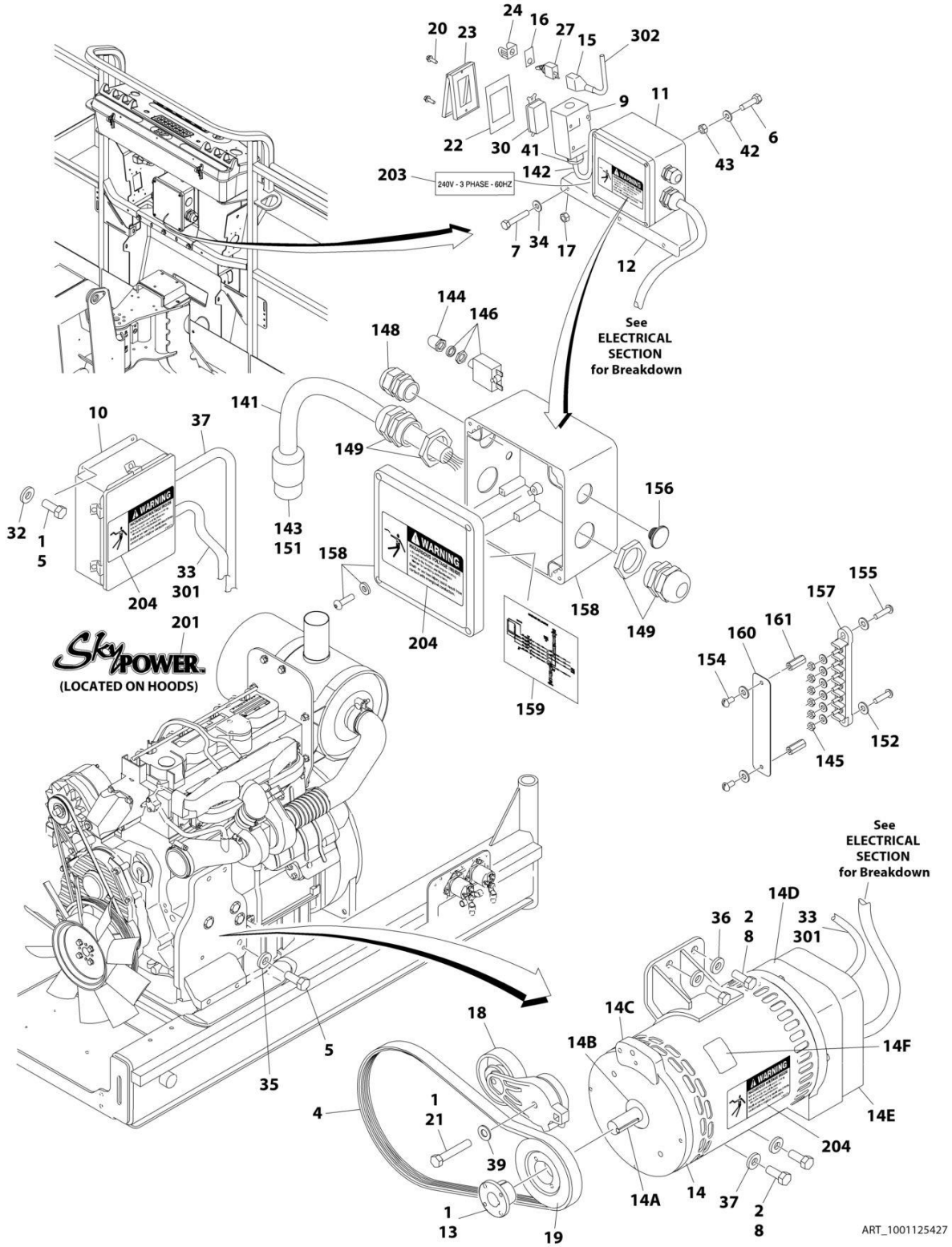

FIGURE 3-48. 7500W SKYPOWER GENERATOR INSTALLATION - 60HZ SPEC (DEUTZ TD2011 ENGINES) (OPTIONAL)

ITEM	PART NUMBER	QTY	DESCRIPTION	REV
	1001125427	Ref	7500W SKYPOWER GENERATOR INSTALLATION - 60HZ SPEC (DEUTZ TD2011 ENGINES)	D
		Ref	Note: See ELECTRICAL SECTION for Boom Cable Installation.	
1	0100011	AR	Compound, Locking	
2	0100019	AR	Compound, Locking	
4	0480128	1	Belt, Generator	
5	0641404	6	Bolt 1/4 x 1/2	
6	3931016	AR	Bolt 10 x 1	
7	0641516	3	Bolt 5/16 x 2	
8	0641810	4	Bolt 1/2 x 1-1/4	
9	0860038	1	Box, Switch	
10	0861538	1	Box, Generator Control	
10	7024488	1	Card, Circuit - Generator Power (Not Shown)	
10	See Note	1	Fuse (Note: Not Available - Purchase Locally)	
10	7024489	1	Card, Circuit - Control (Not Shown)	
		Ref	Note: When replacing card, rocker switch on card must be set for required application.	
10	70000619	1	Harness, Circuit Card	
11	1001157592	1	Junction Box Assembly Options (See Items 141-161 for Breakdown)	
12	0902888	1	Bracket, Generator Junction Box	
13	0962520	1	Bushing, Taper	
14	2460048	1	Generator, 7500W	
14	70001100	1	Rotor (Includes p/n 70001384 & 70000863) (Not Shown)	
14	70001384	1	Bearing, Shaft (Rear) (Not Shown)	
14	70000863	1	Fan, Generator (Not Shown)	
14	70002088	1	Stator (Not Shown)	
14	70002297	2	Stud 1/4 x 12-7/8 (Not Shown)	
14	70003631	1	Brushholder Assembly (Not Shown) (was p/n 7024484)	
14A	70004171	1	Key	
14B	70001966	1	Bearing, Ball Radial (Located in Belt Tensioner Endbell)	
14B	70003709	1	Ring, Retaining (Small)	
14B	70003708	1	Ring, Retaining (Large)	
14C	70001953	1	Endbell, Belt Tensioner	
14D	70004169	1	Kit, Endbell (Includes Endbell, Brush Block and Shroud Assembly)	
14E	7027799	1	Block, Connector 6 Position (Not Shown)	
14E	70002460	6	Nut, Brass (Attaches p/n 7027799 to Cover) (Not Shown)	
14E	7024485	1	Breaker, Circuit 30Amp (Not Shown)	
14E	70001696	1	Boot, Breaker (Not Shown)	
14E	7026597	1	Connector with Leads (Not Shown)	
14E	7026626	1	Connector with Pins (Not Shown)	
14E	7026188	1	Clamp, Cable (Not Shown)	
14E	70002255	1	Plate, End Panel (Not Shown)	
14E	See Note	NSS	Insulator, End Panel (Note: Not Available for Purchase)	
14E	70001974	1	Decal - Terminal Connections (Not Shown)	
14F	70001973	1	Decal - Warning Moving Parts	
15	2820031	AR	Insulator, Heat Shrink	
16	3251102	1	Nameplate, Generator	
17	3311508	3	Nut 5/16	

ITEM	PART NUMBER	QTY	DESCRIPTION	REV
18	3580317	1	Pulley, Belt Tensioner	
19	3580318	1	Pulley, Generator	
20	3910606	4	Screw #6 x 3/8	
21	0641618	1	Bolt 3/8 x 2	
22	3960422	1	Gasket, AC Receptacle	
23	1001110873	1	Shield, Receptacle Cover	
24	4060802	1	Guard, Switch	
26	4240018	AR	Strap, Tie (Not Shown)	
27	4360336	1	Switch, Toggle	
30	4460346	1	Terminal, Receptacle	
32	4711400	4	Washer 1/4	
33	0100048	AR	Grease, Dielectric	
34	4751500	3	Washer 5/16	
35	4791400	2	Starwasher 1/4	
36	4891800	4	Washer 1/2	
37	4922972	1	Harness, Generator Cable (See Separate Breakdown in ELECTRICAL SECTION)	
39	4711600	1	Washer 3/8	
40	0100020	AR	Sealant, Pipe (Not Shown)	
41	4460071	1	Connector, Strain Relief	
42	4751000	4	Washer #10	
43	3311005	4	Nut #10	
	1001157592	Ref	JUNCTION BOX ASSEMBLY	C
141	1060343	1.5 ft/ 0.5m	Cable, Electrical 10/4	
142	1001179154	2.5 ft/ 0.8m	Cable, 12/3	
143	1671092	1	Cover	
144	3300396	1	Cover, Fuse	
145	3311001	6	Nut #10	
146	4360070	1	Circuit Breaker - 15Amp	
148	4460425	1	Strain Relief, Terminal	
149	4460426	2	Connector, Strain Relief	
151	4460963	1	Connector	
152	4711000	10	Washer #10	
154	10702077	2	Screw #10 x 3/8	
155	10702082	2	Screw #10 x 3/4	
156	1001152525	1	Plug	
157	1001157520	1	Block, Terminal	
158	1001157521	1	Box, Junction	
159	1001157528	1	Decal - Wiring Schematic	
160	1001158007	1	Decal - PVC	
161	1001158008	2	Stand-Off	
	0272435	Ref	DECAL INSTALLATION	D
201	1705460	2	Decal - SkyPower	
202	3251243	1	Decal - 120V - 60Hz (Located at Platform Receptacle)	
203	1705375	1	Decal - 240V - 3 Phase	
204	1705387	3	Decal - Hazardous Voltage	
	1001122528	Ref	ELECTRICAL DIAGRAM COMPONENTS	B
301	1001119968	1	Generator Harness	B
301A	4460967	1	Plug, Male - 3 Position (Not Shown)	
301A	4460465	6	Socket, Female	

ITEM	PART NUMBER	QTY	DESCRIPTION	REV
301B	1001117078	1	Fuseholder with Fuse (Not Shown)	
302	4922641	1	Switch, Harness	

FIGURE 3-49. 7500W SKYPOWER GENERATOR INSTALLATION - 50HZ SPEC (DEUTZ TD2011 ENGINES) (OPTIONAL)

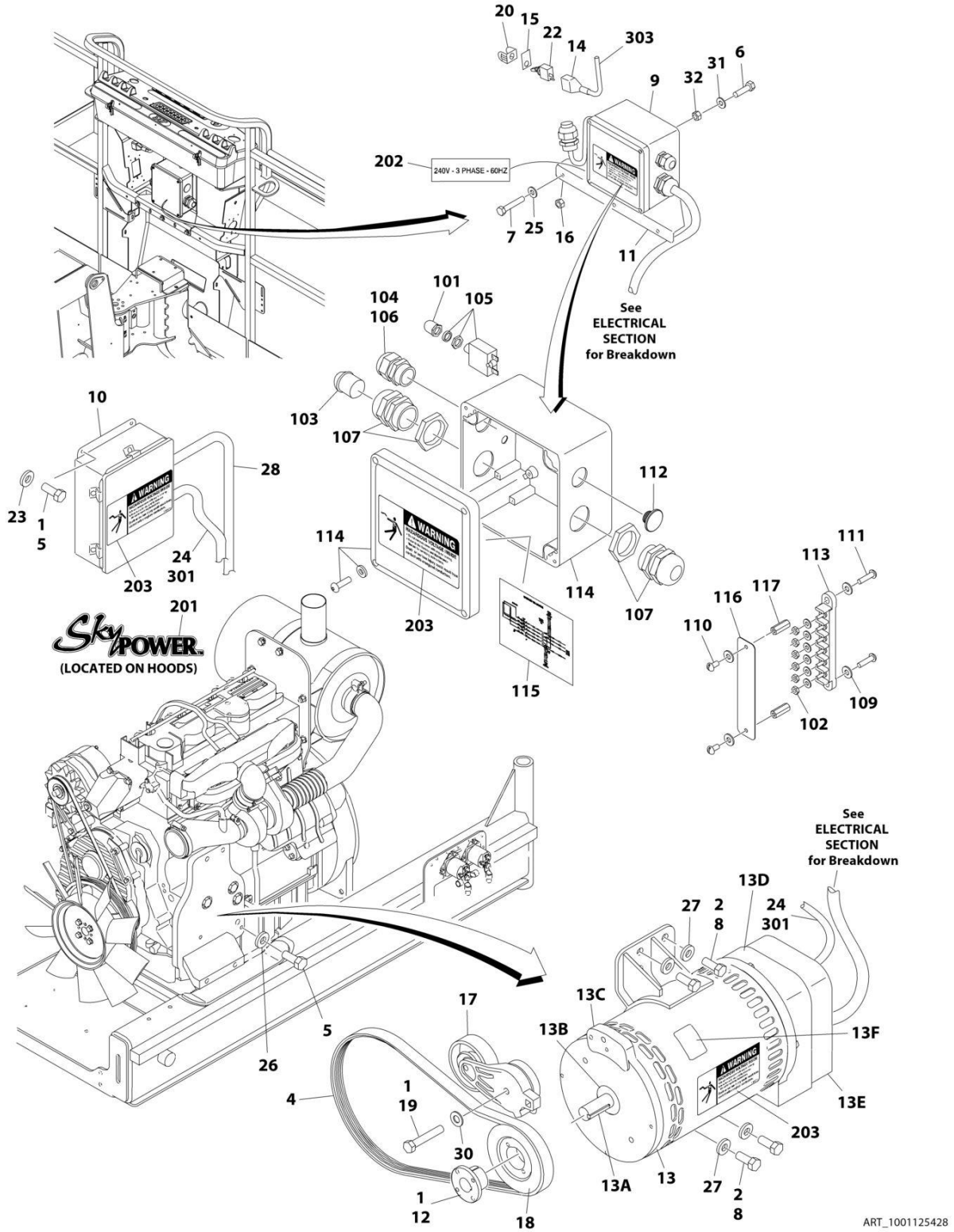

FIGURE 3-49. 7500W SKYPOWER GENERATOR INSTALLATION - 50HZ SPEC (DEUTZ TD2011 ENGINES) (OPTIONAL)

ITEM	PART NUMBER	QTY	DESCRIPTION	REV
	1001125428	Ref	7500W SKYPOWER GENERATOR INSTALLATION - 50HZ SPEC (DEUTZ TD2011 ENGINES)	C
		Ref	Note: See ELECTRICAL SECTION for Boom Cable Installation.	
1	0100011	AR	Compound, Locking	
2	0100019	AR	Compound, Locking	
4	0480129	1	Belt, Generator	
5	0641404	5	Bolt 1/4 x 1/2	
6	3931016	4	Bolt 10 x 1	
7	0641516	3	Bolt 5/16 x 2	
8	0641810	4	Bolt 1/2 x 1-1/4	
9	1001157525	1	Junction Box Assembly (See Items 101-117 for Breakdown)	
10	0861572	1	Box, Generator Control	
10	7024488	1	Card, Circuit - Generator Power (Not Shown)	
10	See Note	1	Fuse (Note: Not Available - Purchase Locally)	
10	7024489	1	Card, Circuit - Control (Not Shown)	
		Ref	Note: When replacing card, rocker switch on card must be set for required application.	
10	70000619	1	Harness, Circuit Card	
11	0902888	1	Bracket, Generator Junction Box	
12	0962520	1	Bushing, Taper	
13	2460048	1	Generator, 7500W	
13	70001100	1	Rotor (Includes p/n 70001384 & 70000863) (Not Shown)	
13	70001384	1	Bearing, Shaft (Rear) (Not Shown)	
13	70000863	1	Fan, Generator (Not Shown)	
13	70002088	1	Stator (Not Shown)	
13	70002297	2	Stud 1/4 x 12-7/8	
13	70003631	1	Brushholder Assembly (Not Shown)	
13A	70004171	1	Key	
13B	70001966	1	Bearing, Ball Radial (Located in Belt Tensioner Endbell)	
13B	70003709	1	Ring, Retaining (Small)	
13B	70003708	1	Ring, Retaining (Large)	
13C	70001953	1	Endbell, Belt Tensioner	
13D	70004169	1	Kit, Endbell (Includes Endbell, Brush Block and Shroud Assembly)	
13E	7027799	1	Block, Connector 6 Position (Not Shown)	
13E	70002460	6	Nut, Brass (Attaches p/n 7027799 to Cover) (Not Shown)	
13E	7024485	1	Breaker, Circuit 30Amp (Not Shown)	
13E	70001696	1	Boot, Breaker (Not Shown)	
13E	7026597	1	Connector with Lead (Not Shown)	
13E	7026626	1	Connector with Pins (Not Shown)	
13E	7026188	1	Clamp, Cable (Not Shown)	
13E	70002255	1	Plate, End Panel (Not Shown)	
13E	See Note	1	Insulator, End Panel (Not Shown) (Note: Not Available for Purchase)	
13E	70001974	1	Decal - Terminal Connections (Not Shown)	
13F	70001973	1	Decal - Warning Moving Parts	
14	2820031	AR	Insulator, Heat Shrink	
15	3251102	1	Nameplate, Generator	
16	3311508	3	Nut 5/16	
17	3580317	1	Pulley, Belt Tensioner	

SECTION 3 - ENGINE

ITEM	PART NUMBER	QTY	DESCRIPTION	REV
18	3580319	1	Pulley, Generator	
19	0641618	1	Bolt 3/8 x 2	
20	4060802	1	Guard, Switch	
21	4240018	AR	Strap, Tie (Not Shown)	
22	4360336	1	Switch, Toggle	
23	4711400	4	Washer 1/4	
24	0100048	AR	Grease, Dielectric	
25	4751500	3	Washer 5/16	
26	4791400	2	Starwasher 1/4	
27	4891800	4	Washer 1/2	
28	4922972	1	Harness, Generator Cable (See Separate Breakdown in ELECTRICAL SECTION)	
30	4711600	1	Washer 3/8	
31	4751000	4	Washer #10	
32	3311005	4	Nut #10	
	1001157525	Ref	JUNCTION BOX ASSEMBLY	B
101	3300396	1	Cover, Fuse	
102	3311001	6	Nut #10	
103	3520189	1	Plug	
104	3520192	1	Plug	
105	4360070	1	Circuit Breaker - 15Amp	
106	4460425	1	Strain Relief, Terminal	
107	4460426	2	Connector, Strain Relief	
109	4711000	10	Washer #10	
110	10702077	2	Screw #10 x 3/8	
111	10702082	2	Screw #10 x 3/4	
112	1001152525	1	Plug	
113	1001157520	1	Block, Terminal	
114	1001157521	1	Box, Junction	
115	1001157528	1	Decal - Wiring Schematic	
116	1001158007	1	Cover, PVC	
117	1001158008	2	Stand-Off	
	0272589	Ref	DECAL INSTALLATION	A
201	1705460	2	Decal - SkyPower	
202	1705461	1	Decal - 240V - 3 Phase	
203	1705489	3	Decal - Hazardous Voltage	
	1001122528	Ref	ELECTRICAL DIAGRAM COMPONENTS	B
301	1001119968	1	Generator Harness	B
301A	4460967	1	Plug, Male - 3 Position (Not Shown)	
301A	4460465	6	Socket, Female	
301B	1001117078	1	Fuseholder with Fuse (Not Shown)	
303	4922641	1	Switch Harness	

FIGURE 3-50. 7500W SKYPOWER GENERATOR INSTALLATION - 60HZ SPEC (DEUTZ TCD2.9L4 ENGINES) (OPTIONAL)

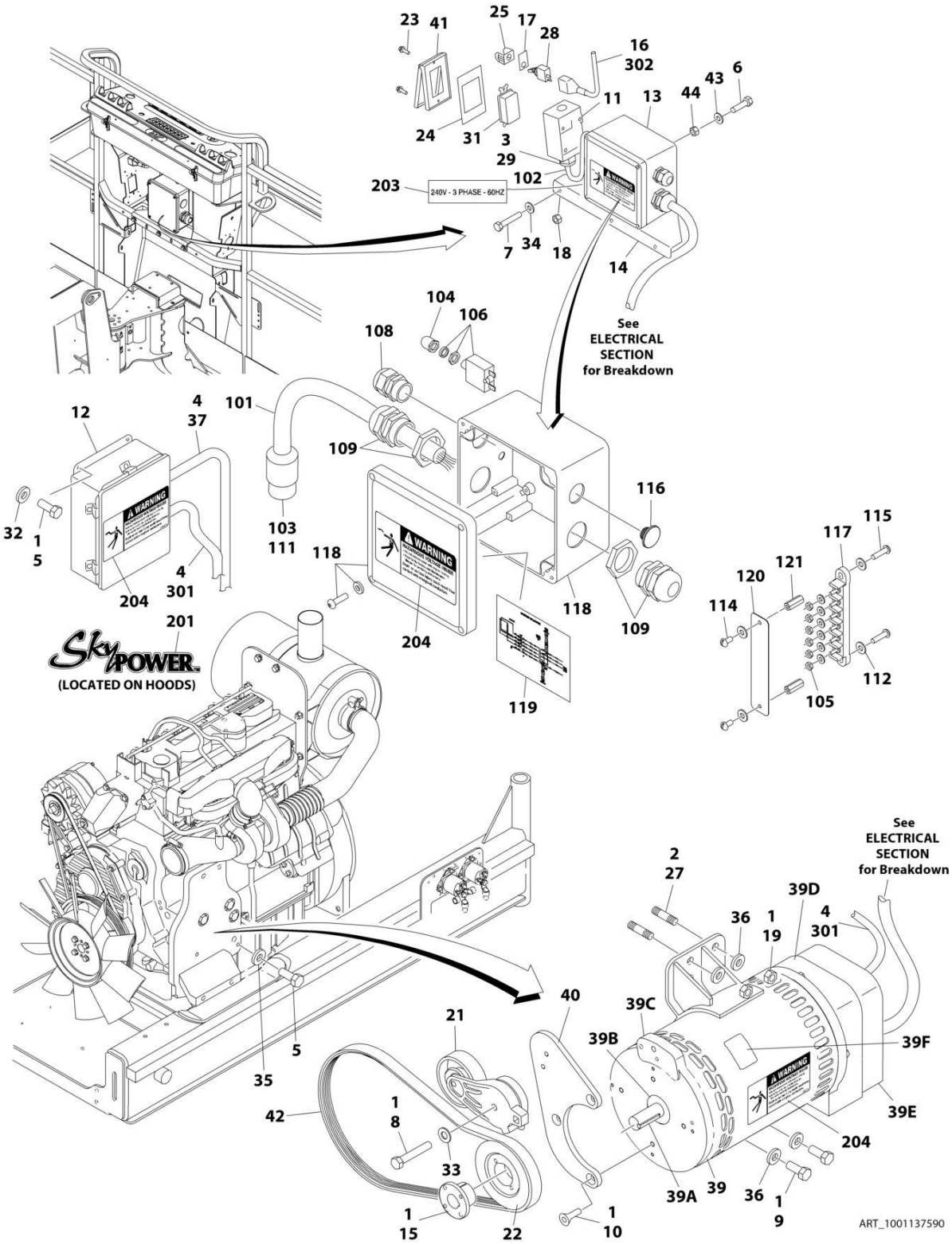

FIGURE 3-50. 7500W SKYPOWER GENERATOR INSTALLATION - 60HZ SPEC (DEUTZ TCD2.9L4 ENGINES) (OPTIONAL)

ITEM	PART NUMBER	QTY	DESCRIPTION	REV
	1001137590	Ref	7500W SKYPOWER GENERATOR INSTALLATION - 60HZ SPEC (DEUTZ TCD2.9L4 ENGINES)	G
		Ref	Note: See ELECTRICAL SECTION for Boom Cable Installation.	
1	0100011	AR	Compound, Locking	
2	0100019	AR	Compound, Locking	
3	0100020	AR	Sealant, Pipe	
4	0100048	AR	Grease, Dielectric	
5	0641404	5	Bolt 1/4 x 1/2	
6	3931016	4	Bolt 10 x 1	
7	0641516	3	Bolt 5/16 x 2	
8	0641618	1	Bolt 3/8 x 2	
9	0641810	2	Bolt 1/2 x 1-1/4	
10	0741607	3	Screw 3/8 x 7/8	
11	0860038	1	Box, Switch	
12	0861538	1	Box, Generator Control	
12	7024488	1	Card, Circuit - Generator Power (Not Shown)	
12	See Note	1	Fuse (Note: Not Available Purchase Locally)	
12	7024489	1	Card, Circuit - Control (Not Shown)	
		Ref	Note: When replacing card, rocker switch on card must be set for required application.	
12	70000619	1	Harness, Circuit Card	
13	1001157592	1	Junction Box Assembly (See Items 101-121 for Breakdown)	
14	0902888	1	Bracket, Generator Junction Box	
15	0962520	1	Bushing, Taper	
16	2820031	AR	Insulator, Heat Shrink	
17	3251102	1	Nameplate, Generator	
18	3311508	3	Nut 5/16	
19	3311801	2	Nut 1/2	
21	3580317	1	Pulley, Belt Tensioner	
22	3580318	1	Pulley, Generator	
23	3910606	AR	Screw #6 x 3/8	
24	3960422	1	Gasket, AC Receptacle	
25	4060802	1	Guard, Switch	
26	4240018	AR	Strap, Tie (Not Shown)	
27	4300157	2	Stud 1/2	
28	4360336	1	Switch, Toggle	
29	4460071	1	Connector, Strain Relief	
30	4460315	3	Terminal, Spade (Not Shown)	
31	4460346	1	Terminal, Receptacle	
32	4711400	4	Washer 1/4	
33	4711600	1	Washer 3/8	
34	4751500	3	Washer 5/16	
35	4791400	2	Starwasher 1/4	
36	4891800	4	Washer 1/2	
37	4922972	1	Harness, Generator Cable (See Separate Breakdown in ELECTRICAL SECTION)	
39	1001212223	1	Generator, 7500W	
39	70001100	1	Rotor (Includes p/n 70001384 & 70000863)	
39	70001384	1	Bearing, Shaft (Rear)	

SECTION 3 - ENGINE

ITEM	PART NUMBER	QTY	DESCRIPTION	REV
39	70000863	1	Fan, Generator	
39	70006093	1	Stater	
39	70003631	1	Brush-holder Assembly (was p/n 7024484)	
39A	70004099	NLA	Key (Use p/n 70004171)	
39B	70001966	1	Bearing, Ball Radial (Located in Belt Tensioner Endbell)	
39B	70003709	1	Ring, Retaining (Small)	
39B	70003708	1	Ring, Retaining (Large)	
39C	70004092	1	Endbell, Belt Tensioner	
39D	70004094	1	Endbell, Brush Block	
39E	70006094	1	Shroud Assembly	
39E	7027799	1	Block, Connector - 6 Position (Not Shown)	
39E	70002460	6	Nut, Brass (Attaches p/n 7027799 to Cover) (Not Shown)	
39E	70006095	1	Breaker, Circuit 30Amp (Not Shown)	
39E	70006096	1	Boot, Breaker (Not Shown)	
39E	7026597	1	Connector with Leads (Not Shown)	
39E	7026626	1	Connector with Pins (Not Shown)	
39E	70004098	1	Clamp, Cable (Not Shown)	
39E	70006097	1	Plate, End Panel (Not Shown)	
39E	70002291	1	Insulator, End Panel Generator (Not Shown)	
39E	70001974	1	Decal - Terminal Connections (Not Shown)	
39F	70001973	1	Decal - Warning Moving Parts	
40	1001138011	1	Bracket	
41	1001110873	1	Shield, Receptacle Cover	
42	1001142645	1	Belt, Generator	
43	4751000	4	Washer #10	
44	3311005	4	Nut #10	
	1001157592	Ref	JUNCTION BOX ASSEMBLY	C
101	1060343	1.5 ft/ 0.5m	Cable, Electrical 10/4	
102	1001179154	2.5 ft/ 0.8m	Cable, Electrical 12/3	
103	1671092	1	Cover	
104	3300396	1	Cover, Fuse	
105	3311001	6	Nut #10	
106	4360070	1	Circuit Breaker - 15Amp	
108	4460425	1	Strain Relief, Terminal	
109	4460426	2	Connector, Strain Relief	
111	4460963	1	Connector	
112	4711000	10	Washer #10	
114	10702077	2	Screw #10 x 3/8	
115	10702082	2	Screw #10 x 3/4	
116	1001152525	1	Plug	
117	1001157520	1	Block, Terminal	
118	1001157521	1	Box, Junction	
119	1001157528	1	Decal - Wiring Schematic	
120	1001158007	1	Cover, PVC	
121	1001158008	2	Stand-Off	
	0272435	Ref	DECAL INSTALLATION	D
201	1705460	2	Decal - SkyPower	
202	3251243	1	Decal - 120V - 60Hz (Not Shown - Located at Platform Receptacle)	
203	1705375	1	Decal - 240V - 3 Phase	

ITEM	PART NUMBER	QTY	DESCRIPTION	REV
204	1705387	3	Decal - Hazardous Voltage	
	1001122528	Ref	ELECTRICAL DIAGRAM COMPONENTS	B
301	1001119968	1	Generator Harness	B
301A	4460967	1	Plug, Male - 3 Position (Not Shown)	
301A	4460465	6	Socket, Female	
301B	1001117078	1	Fuseholder with Fuse (Not Shown)	
302	4922641	1	Switch Harness	

FIGURE 3-51. 7500W SKYPOWER GENERATOR INSTALLATION - 50HZ SPEC (DEUTZ TCD2.9L4 ENGINES AND DEUTZ TCD2.9L4 (STAGE V) ENGINES) (OPTIONAL)

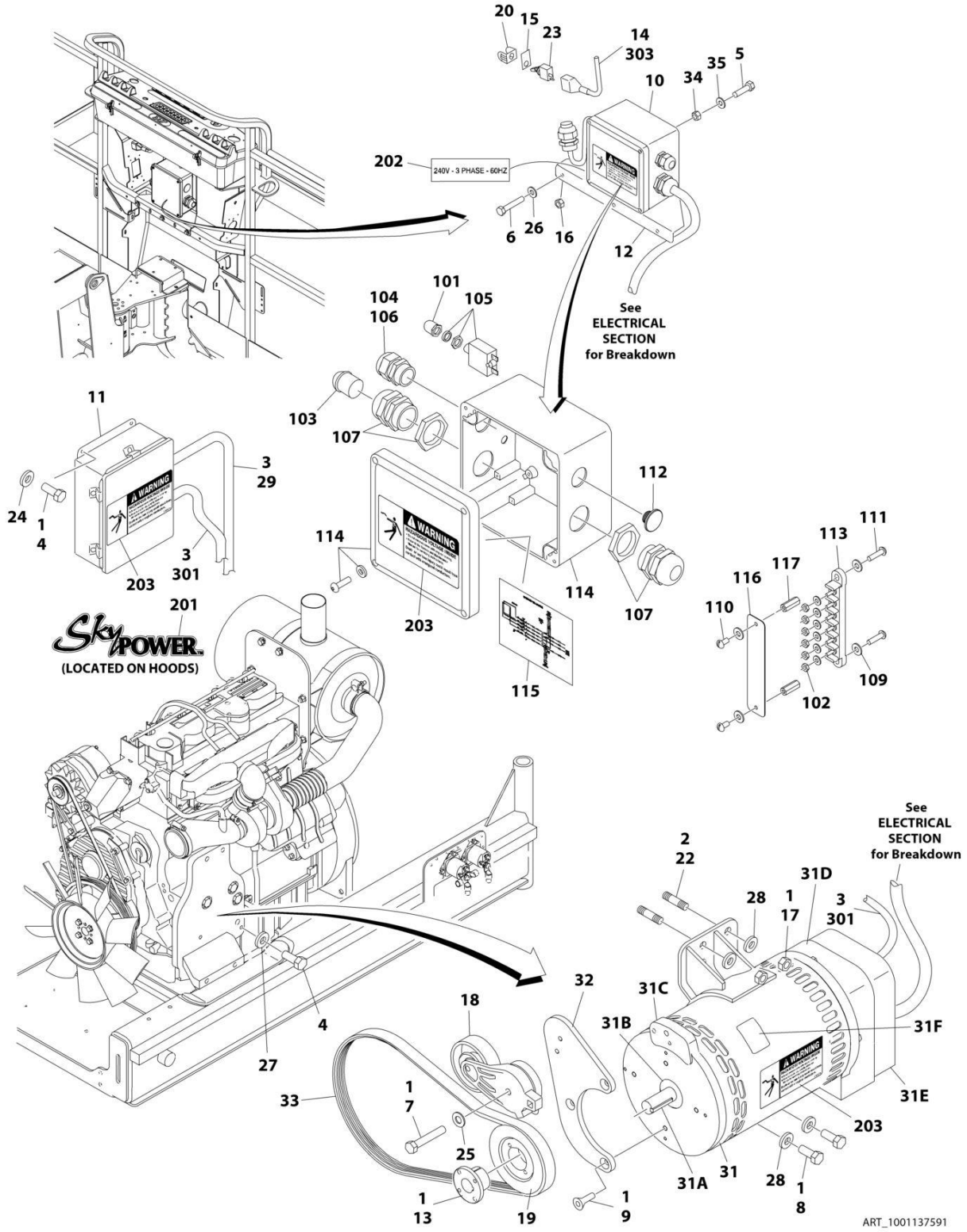

FIGURE 3-51. 7500W SKYPOWER GENERATOR INSTALLATION - 50HZ SPEC (DEUTZ TCD2.9L4 ENGINES AND DEUTZ TCD2.9L4 (STAGE V) ENGINES) (OPTIONAL)

ITEM	PART NUMBER	QTY	DESCRIPTION	REV
	1001137591	Ref	7500W SKYPOWER GENERATOR INSTALLATION - 50HZ SPEC (DEUTZ TCD2.9L4 ENGINES)	D
		Ref	Note: See ELECTRICAL SECTION for Boom Cable Installation.	
1	0100011	AR	Compound, Locking	
2	0100019	AR	Compound, Locking	
3	0100048	AR	Grease, Dielectric	
4	0641404	5	Bolt 1/4 x 1/2	
5	3931016	4	Bolt 10 x 1	
6	0641516	3	Bolt 5/16 x 2	
7	0641618	1	Bolt 3/8 x 2	
8	0641810	2	Bolt 1/2 x 1-1/4	
9	0741607	3	Screw 3/8 x 7/8	
10	1001157525	1	Junction Box Assembly (See Items 101-117 for Breakdown)	
11	0861572	1	Box, Generator Control	
11	7024488	1	Card, Circuit - Generator Power (Not Shown)	
11	See Note	1	Fuse (Note: Not Available - Purchase Locally)	
11	7024489	1	Card, Circuit - Control (Not Shown)	
		Ref	Note: When replacing card, rocker switch on card must be set for required application.	
11	70000619	1	Harness, Circuit Card	
12	0902888	1	Bracket, Generator Junction Box	
13	0962520	1	Bushing, Taper	
14	2820031	AR	Insulator, Heat Shrink	
15	3251102	1	Nameplate, Generator	
16	3311508	3	Nut 5/16	
17	3311801	2	Nut 1/2	
18	3580317	1	Pulley, Belt Tensioner	
19	3580319	1	Pulley, Generator	
20	4060802	1	Guard, Switch	
21	4240018	AR	Strap, Tie (Not Shown)	
22	4300157	2	Stud 1/2	
23	4360336	1	Switch, Toggle	
24	4711400	4	Washer 1/4	
25	4711600	1	Washer 3/8	
26	4751500	3	Washer 5/16	
27	4791400	2	Starwasher 1/4	
28	4891800	4	Washer 1/2	
29	4922972	1	Harness, Generator Cable (See Separate Breakdown in ELECTRICAL Section)	
31	1001212223	1	Generator, 7500W	
31	70001100	1	Rotor (Includes p/n 70001384 & 70000863) (Not Shown)	
31	70001384	1	Bearing, Shaft (Rear) (Not Shown)	
31	70000863	1	Fan, Generator (Not Shown)	
31	70006093	1	Stater (Not Shown)	
31	70003631	1	Brush-holder Assembly (Not Shown)	
31A	70004099	NLA	Key (Use p/n 70004171)	
31B	70001966	1	Bearing, Ball Radial (Located in Belt Tensioner Endbell)	
31B	70003709	1	Ring, Retaining (Small)	
31B	70003708	1	Ring, Retaining (Large)	

SECTION 3 - ENGINE

ITEM	PART NUMBER	QTY	DESCRIPTION	REV
31C	70004092	1	Endbell, Belt Tensioner	
31D	70004094	1	Endbell, Brush Block	
31E	70006094	1	Shroud Assembly	
31E	7027799	1	Block, Connector - 6 Position (Not Shown)	
31E	70002460	6	Nut, Brass (Attaches p/n 7027799 to Cover) (Not Shown)	
31E	70006095	1	Breaker, Circuit 30Amp (Not Shown)	
31E	70006096	1	Boot, Breaker (Not Shown)	
31E	7026597	1	Connector with Leads (Not Shown)	
31E	7026626	1	Connector with Pins (Not Shown)	
31E	70004098	1	Clamp, Cable (Not Shown)	
31E	70006097	1	Plate, End Panel (Not Shown)	
31E	70002291	1	Insulator, End Panel (Not Shown)	
31E	70001974	1	Decal - Terminal Connections (Not Shown)	
31F	70001973	1	Decal - Warning Moving Parts	
32	1001138011	1	Bracket	
33	1001136357	1	Belt, Generator	
34	3311005	4	Nut #10	
35	4751000	4	Washer #10	
	1001157525	Ref	JUNCTION BOX ASSEMBLY	B
101	3300396	1	Cover, Fuse	
102	3311001	6	Nut #10	
103	3520189	1	Plug (50Hz Spec Only)	
104	3520192	1	Plug	
105	4360070	1	Circuit Breaker - 15Amp	
106	4460425	1	Strain Relief, Terminal	
107	4460426	2	Connector, Strain Relief	
109	4711000	10	Washer #10	
110	10702077	2	Screw #10 x 3/8	
111	10702082	2	Screw #10 x 3/4	
112	1001152525	1	Plug	
113	1001157520	1	Block, Terminal	
114	1001157521	1	Box, Junction	
115	1001157528	1	Decal - Wiring Schematic	
116	1001158007	1	Cover, PVC	
117	1001158008	2	Stand-Off	
	0272589	Ref	DECAL INSTALLATION	A
201	1705460	2	Decal - SkyPower	
202	1705461	1	Decal - 240V - 3 Phase	
203	1705489	3	Decal - Hazardous Voltage	
	1001122528	Ref	ELECTRICAL DIAGRAM COMPONENTS	B
301	1001119968	1	Generator Harness (With UGM)	B
301A	4460967	1	Plug, Male - 3 Position (Not Shown)	
301A	4460465	6	Socket, Female	
301B	1001117078	1	Fuseholder with Fuse (Not Shown)	
303	4922641	1	Switch Harness	

SECTION 4 - BOOM

SECTION 4 - BOOM

FIGURE 4-1. BOOM AND CYLINDER INSTALLATION - WITHOUT COLD WEATHER PLUS PACKAGE

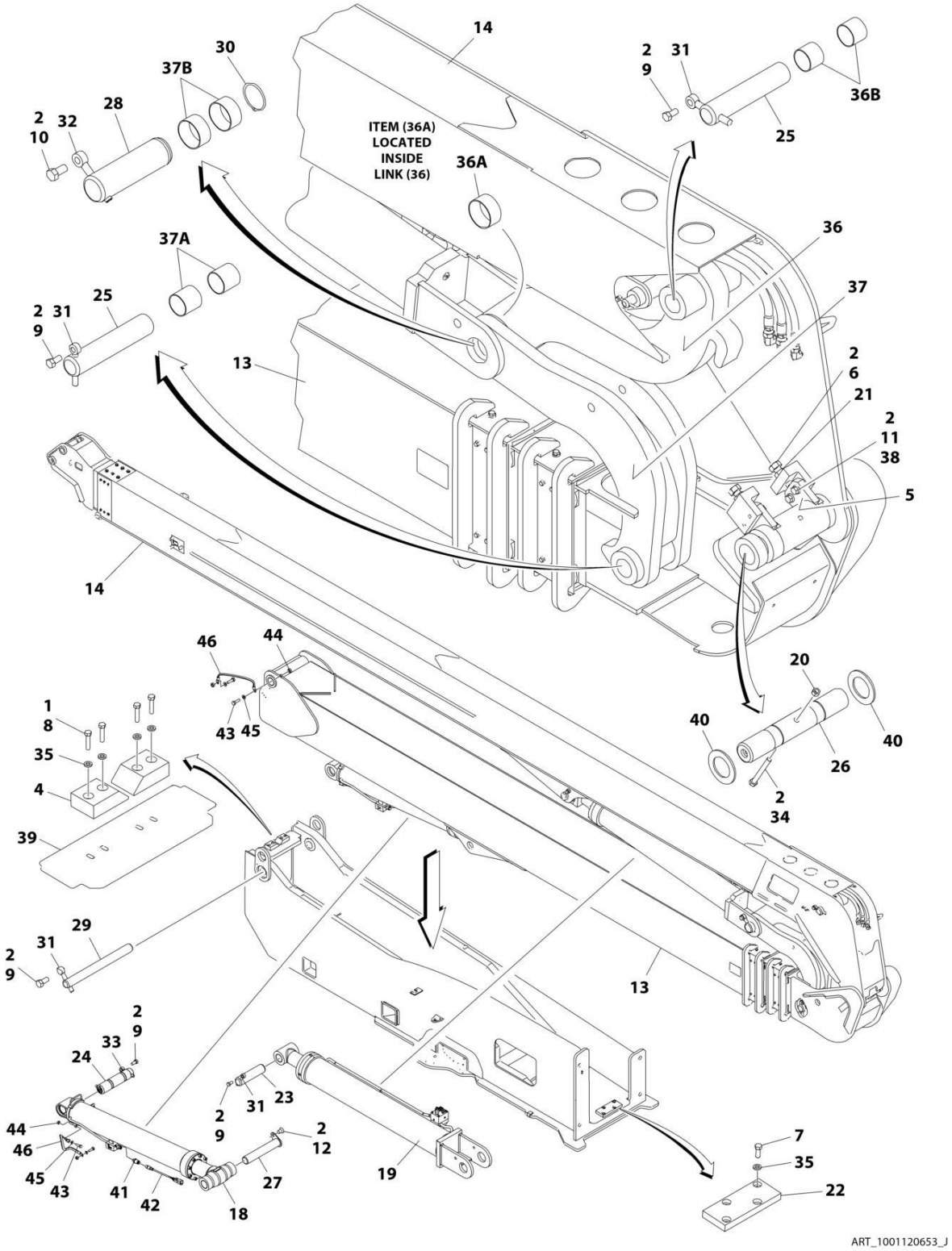

FIGURE 4-1. BOOM AND CYLINDER INSTALLATION - WITHOUT COLD WEATHER PLUS PACKAGE

ITEM	PART NUMBER	QTY	DESCRIPTION	REV
	1001120653	Ref	BOOM AND CYLINDER INSTALLATION - WITHOUT COLD WEATHER PLUS PACKAGE	J
1	0100011	AR	Compound, Locking	
2	0100019	AR	Compound, Locking	
4	0561380	2	Rest, Boom	
5	0561547	2	Block, Clamping	
6	0642624	2	Bolt 1 x 3	
7	0641608	4	Bolt 3/8 x 1	
8	0641613	4	Bolt 3/8 x 1-5/8	
9	0642212	5	Bolt 3/4 x 1-1/2	
10	0642616	1	Bolt 1 x 2	
11	0682016	4	Bolt 5/8 x 2 Grade 8	
12	0742210	1	Screw 3/4 x 1-1/4	
13	0801370	1	Tower Boom Assembly (See Separate Breakdown in this Section)	
14	0801371	1	Main Boom Assembly (See Separate Breakdown in this Section)	
18	1001228077	1	Tower Lift Cylinder Assembly (See Separate Breakdown in CYLINDER Section)	
19	1001251078	1	Main Lift Cylinder Assembly (See Separate Breakdown in CYLINDER Section)	
20	3272001	1	Nut 5/8 Grade 8	
21	3312602	2	Nut 1	
22	3340927	1	Pad	
23	3422920	1	Pin	
24	3423209	1	Pin, Load Sensing	
25	3423061	2	Pin	
26	3423062	1	Pin	
27	3423063	1	Pin	
28	3423064	1	Pin	
29	3423065	1	Pin	
30	3760475	1	Ring, Retaining	
31	3841287	4	Keeper, Pin	
32	3841356	1	Keeper, Pin	
33	3841581	1	Keeper, Pin	
34	0682048	1	Bolt 5/8 x 6 Grade 8	
35	4711600	8	Washer 3/8	
36	3010133	1	Link, Upper	
36A	0440273	1	Bearing	
36B	0962297	2	Bushing	
37	3010134	1	Link, Lower	
37A	0962033	2	Bushing	
37B	0962122	2	Bushing	
38	4892000	4	Washer 5/8	
39	3380547	1	Deflector	
40	4740492	1	Thrustwasher	
41	1001253593	1	Switch, Pressure Transducer	
42	1001228498	1	Harness, Pressure Transducer (See Separate Breakdown in ELECTRICAL Section)	
43	0761015	4	Bolt M10 x 35	
44	3291007	4	Nut M10	
45	4812000	4	Washer M10	

SECTION 4 - BOOM

ITEM	PART NUMBER	QTY	DESCRIPTION	REV
46	1001212243	2	Cable	

FIGURE 4-2. BOOM AND CYLINDER INSTALLATION - WITH COLD WEATHER PLUS PACKAGE

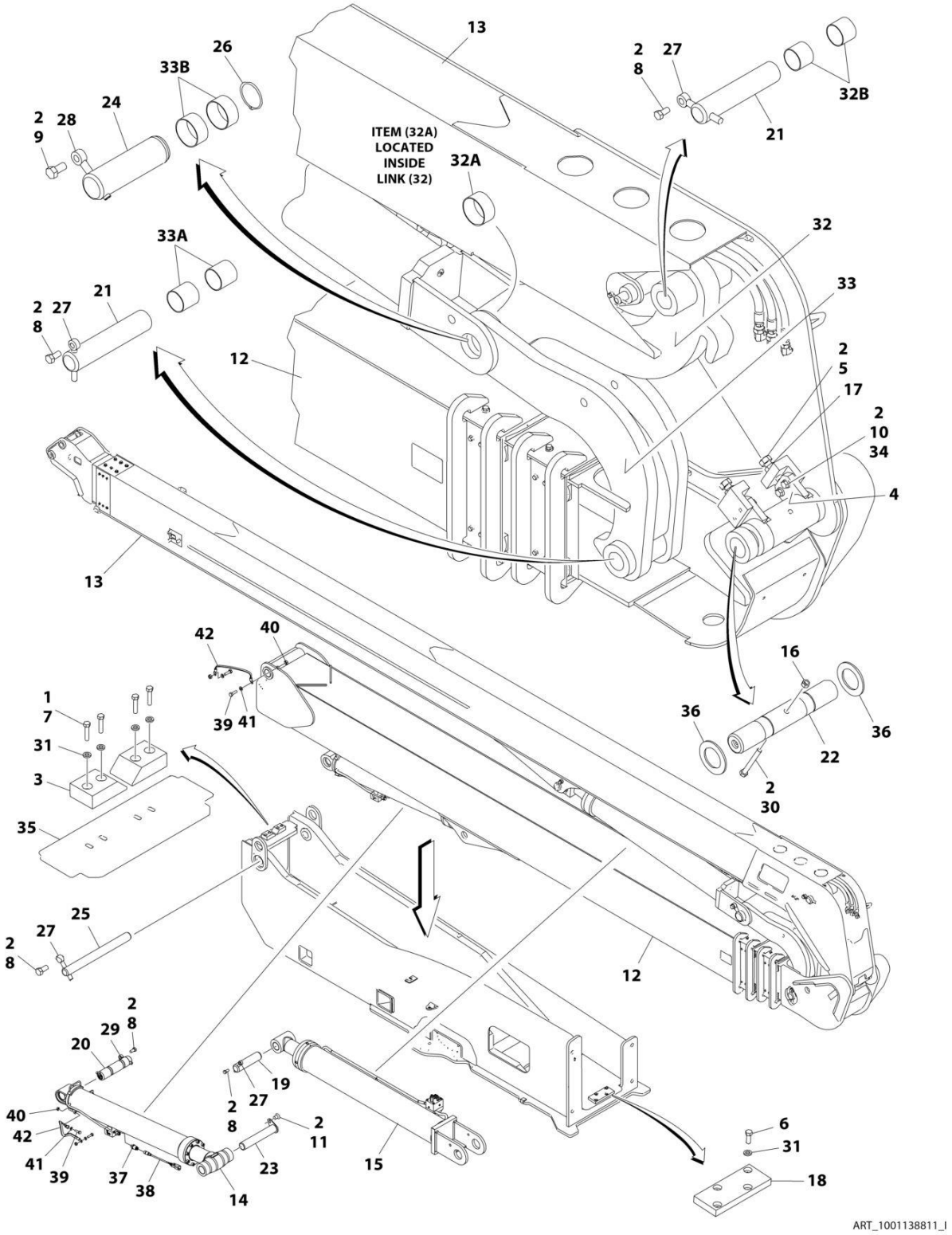

FIGURE 4-2. BOOM AND CYLINDER INSTALLATION - WITH COLD WEATHER PLUS PACKAGE

ITEM	PART NUMBER	QTY	DESCRIPTION	REV
	1001138811	Ref	BOOM AND CYLINDER INSTALLATION - WITH COLD WEATHER PLUS PACKAGE	I
1	0100011	AR	Compound, Locking	
2	0100019	AR	Compound, Locking	
3	0561380	2	Rest, Boom	
4	0561547	2	Block, Clamping	
5	0642624	2	Bolt 1 x 3	
6	0641608	4	Bolt 3/8 x 1	
7	0641613	4	Bolt 3/8 x 1-5/8	
8	0642212	5	Bolt 3/4 x 1-1/2	
9	0642616	1	Bolt 1 x 2	
10	0682016	4	Bolt 5/8 x 2 Grade 8	
11	0742210	1	Screw 3/4 x 1-1/4	
12	0801370	1	Tower Boom Assembly (See Separate Breakdown in this Section)	
13	1001138812	1	Main Boom Assembly (See Separate Breakdown in this Section)	
14	1001228077	1	Tower Lift Cylinder Assembly (See Separate Breakdown in CYLINDER Section)	
15	1001251078	1	Main Lift Cylinder Assembly (See Separate Breakdown in CYLINDER Section)	
16	3272001	1	Nut 5/8 Grade 8	
17	3312602	1	Nut 1	
18	3340927	1	Pad	
19	3422920	1	Pin	
20	3423209	1	Pin, Load Sensing	
21	3423061	2	Pin	
22	3423062	1	Pin	
23	3423063	1	Pin	
24	3423064	1	Pin	
25	3423065	1	Pin	
26	3760475	1	Ring, Retaining	
27	3841287	4	Keeper, Pin	
28	3841356	1	Keeper, Pin	
29	3841581	1	Keeper, Pin	
30	0682048	1	Bolt 5/8 x 6 Grade 8	
31	4711600	8	Washer 3/8	
32	3010133	1	Link, Upper	
32A	0440273	1	Bearing	
32B	0962297	2	Bushing	
33	3010134	1	Link, Lower	
33A	0962033	2	Bushing	
33B	0962122	2	Bushing	
34	4892000	4	Washer 5/8	
35	3380547	1	Deflector	
36	4740492	2	Thrustwasher	
37	1001253593	1	Switch, Pressure Transducer	
38	1001228498	1	Harness, Pressure Transducer (Not Shown - See Separate Breakdown in ELECTRICAL Section)	
39	0761015	4	Bolt M10 x 35	
40	3291007	4	Nut M10	
41	4812000	4	Washer M10	

SECTION 4 - BOOM

ITEM	PART NUMBER	QTY	DESCRIPTION	REV
42	1001212243	2	Cable	

FIGURE 4-3. TOWER BOOM ASSEMBLY

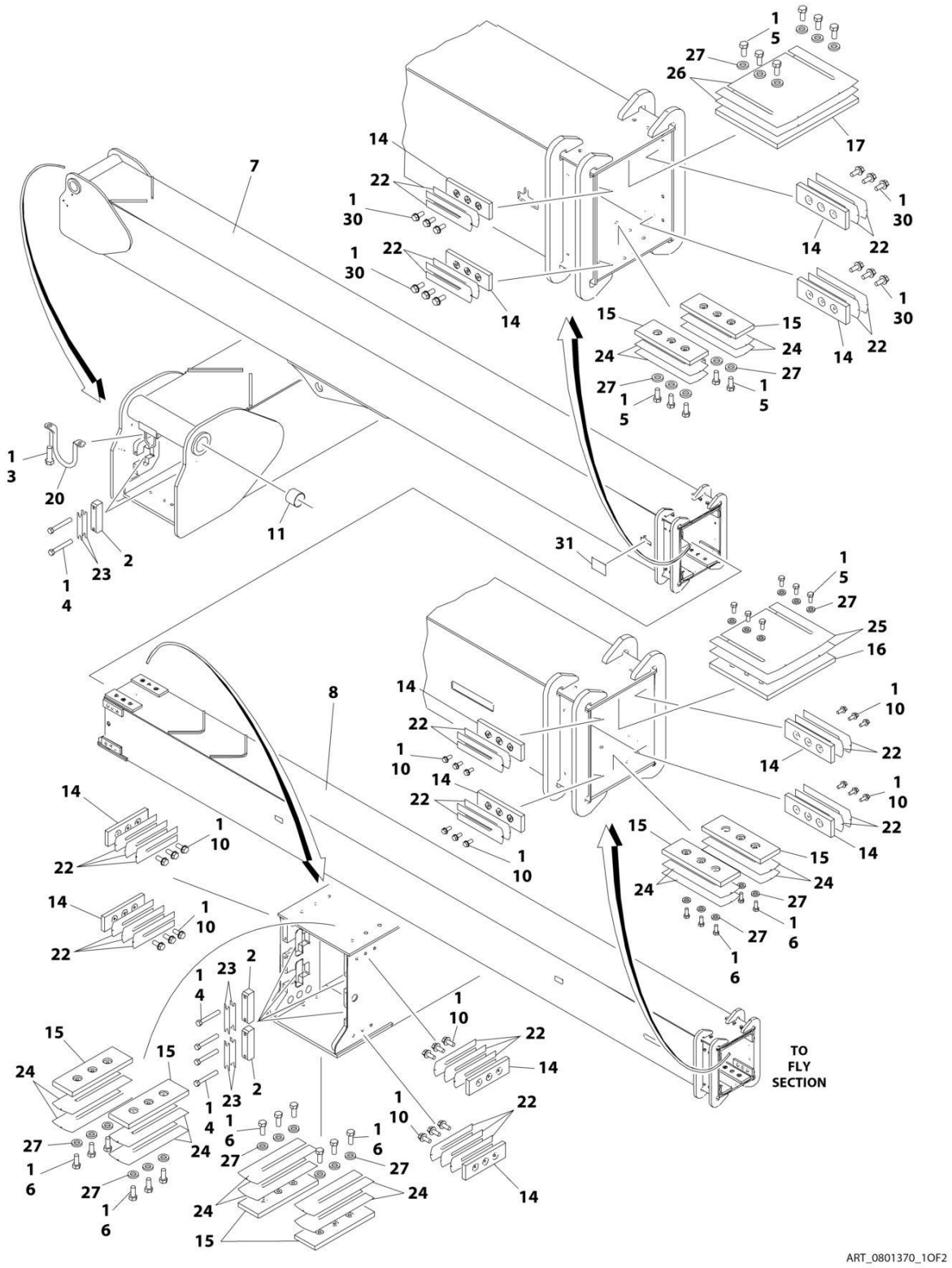

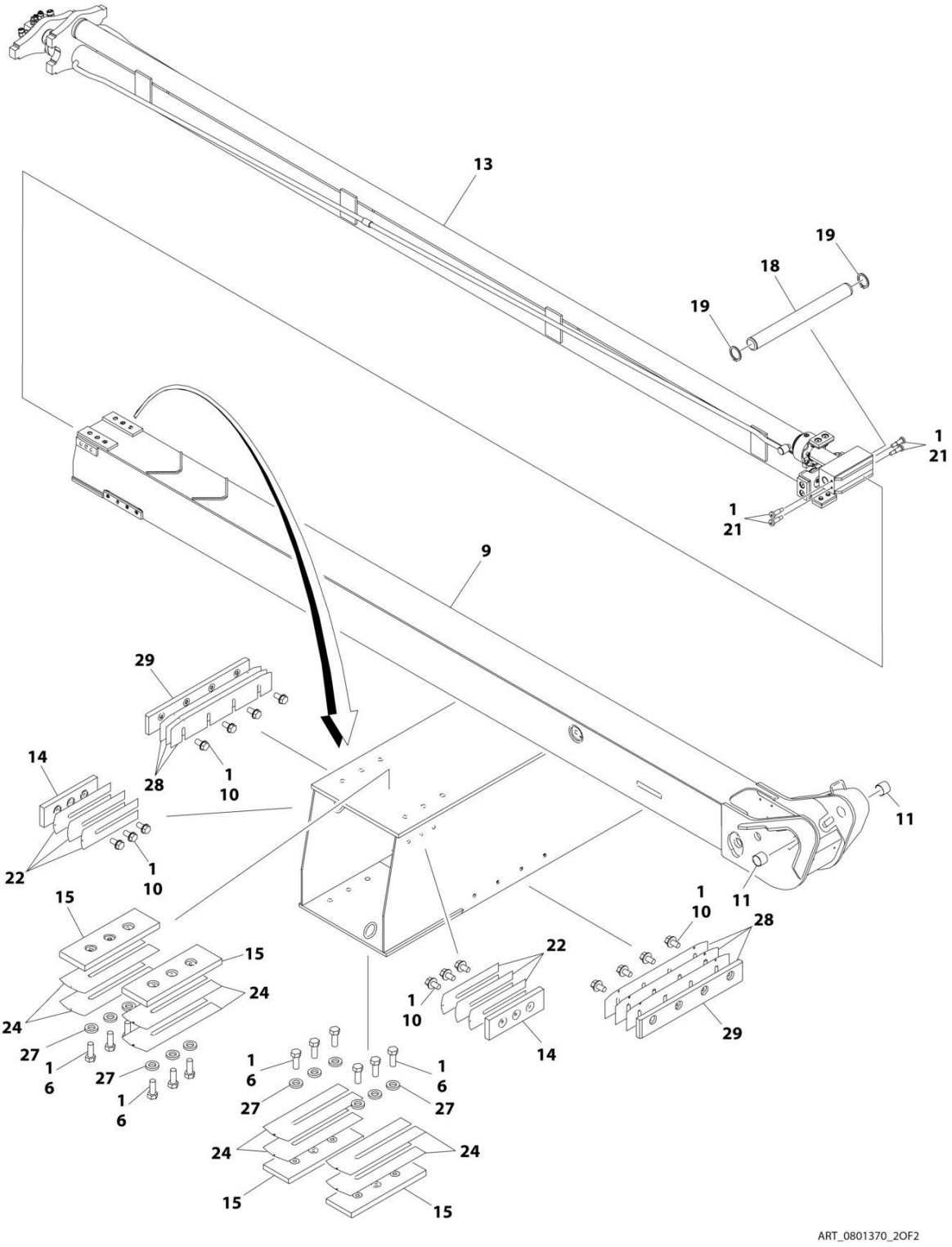
13
19
18
19
1
21
1
21
9
29
14
28
1
10
22
1
10
11
15
1
10
28
15
22
24
1
10
24
14
29
27
1
6
27
1
6
1
6
1
6
27
27
24
24
15
15
ART_0801370_2OF2

FIGURE 4-3. TOWER BOOM ASSEMBLY

ITEM	PART NUMBER	QTY	DESCRIPTION	REV
	0801370	Ref	TOWER BOOM ASSEMBLY	F
1	0100011	AR	Compound, Locking	
2	0561533	6	Block, Trunnion Keeper	
3	0641604	2	Bolt 3/8 x 1/2	
4	0641622	12	Bolt 3/8 x 2-3/4	
5	0641809	18	Bolt 1/2 x 1-1/8	
6	0641810	30	Bolt 1/2 x 1-1/4	
7	0801365	1	Base, Boom	
8	0801366	1	Mid, Boom	
9	0801367	1	Fly, Boom	
10	0811606	38	Screw 3/8 x 3/4	
11	0962297	4	Bushing	
13	1001228032	1	Tower Telescope Cylinder Assembly (See Separate Breakdown in CYLINDER SECTION)	
14	3340878	14	Pad, Wear	
15	3340978	12	Pad, Wear	
16	3340979	1	Pad, Wear	
17	3340980	1	Pad, Wear	
18	3423066	1	Pin	
19	3760133	2	Ring, Retaining	
20	3811340	1	Loop, Hose	
21	3900269	4	Bolt 1/2 x 1	
22	4070864	34	Shim #16 Gauge	
23	4071031	12	Shim, Trunnion Keeper	
24	4071067	24	Shim #18 Gauge	
25	4071069	2	Shim #18 Gauge	
26	4071071	2	Shim #18 Gauge	
27	4891800	48	Washer 1/2	
28	4071081	6	Shim #18 Gauge	
29	4700014	2	Pad, Wear	
30	0811607	12	Screw 3/8 x 7/8	
31	1671013	1	Cover	
32	3020042	AR	Grease (Not Shown)	

FIGURE 4-4. MAIN BOOM ASSEMBLY - WITHOUT COLD WEATHER PLUS PACKAGE

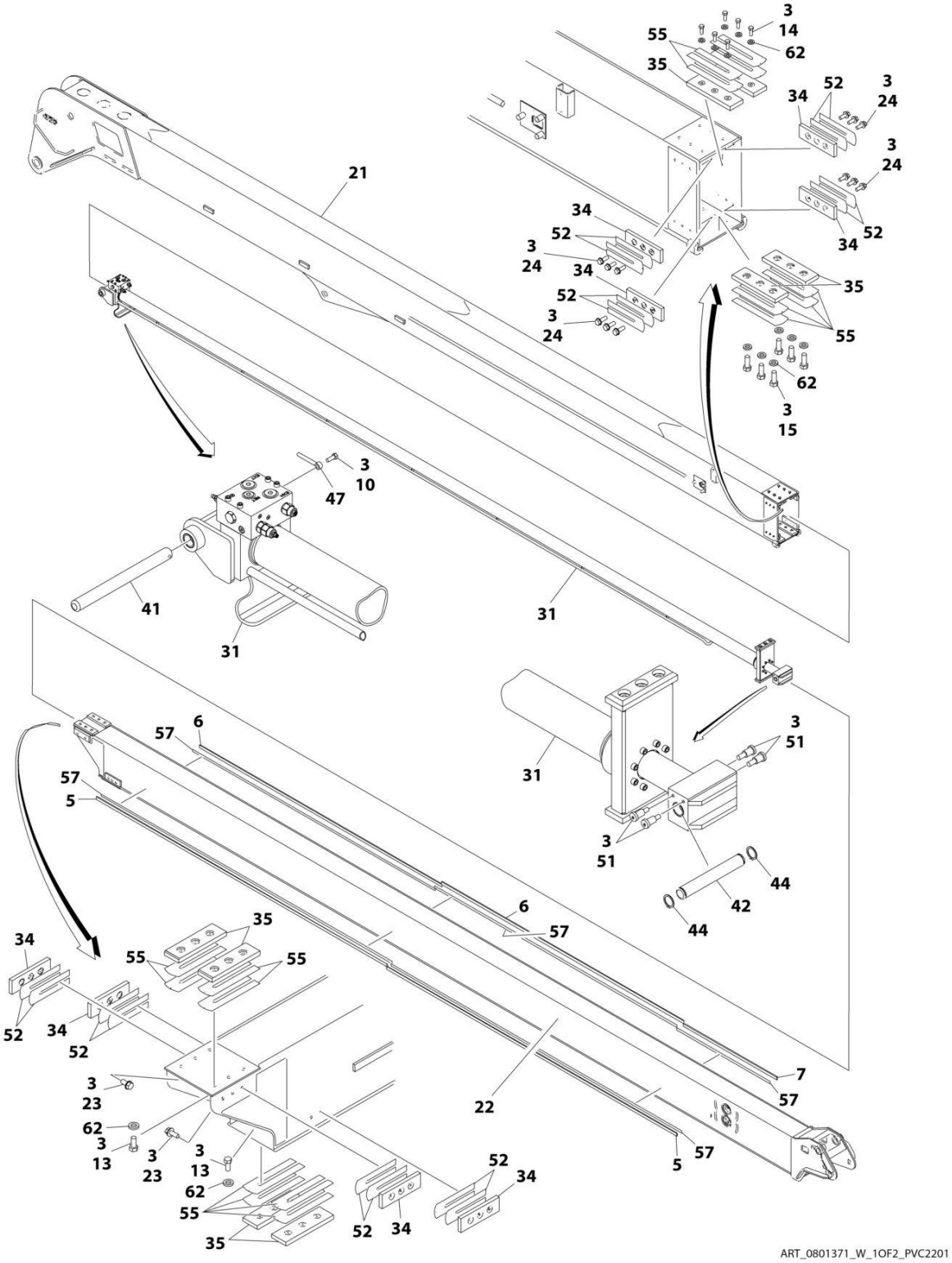

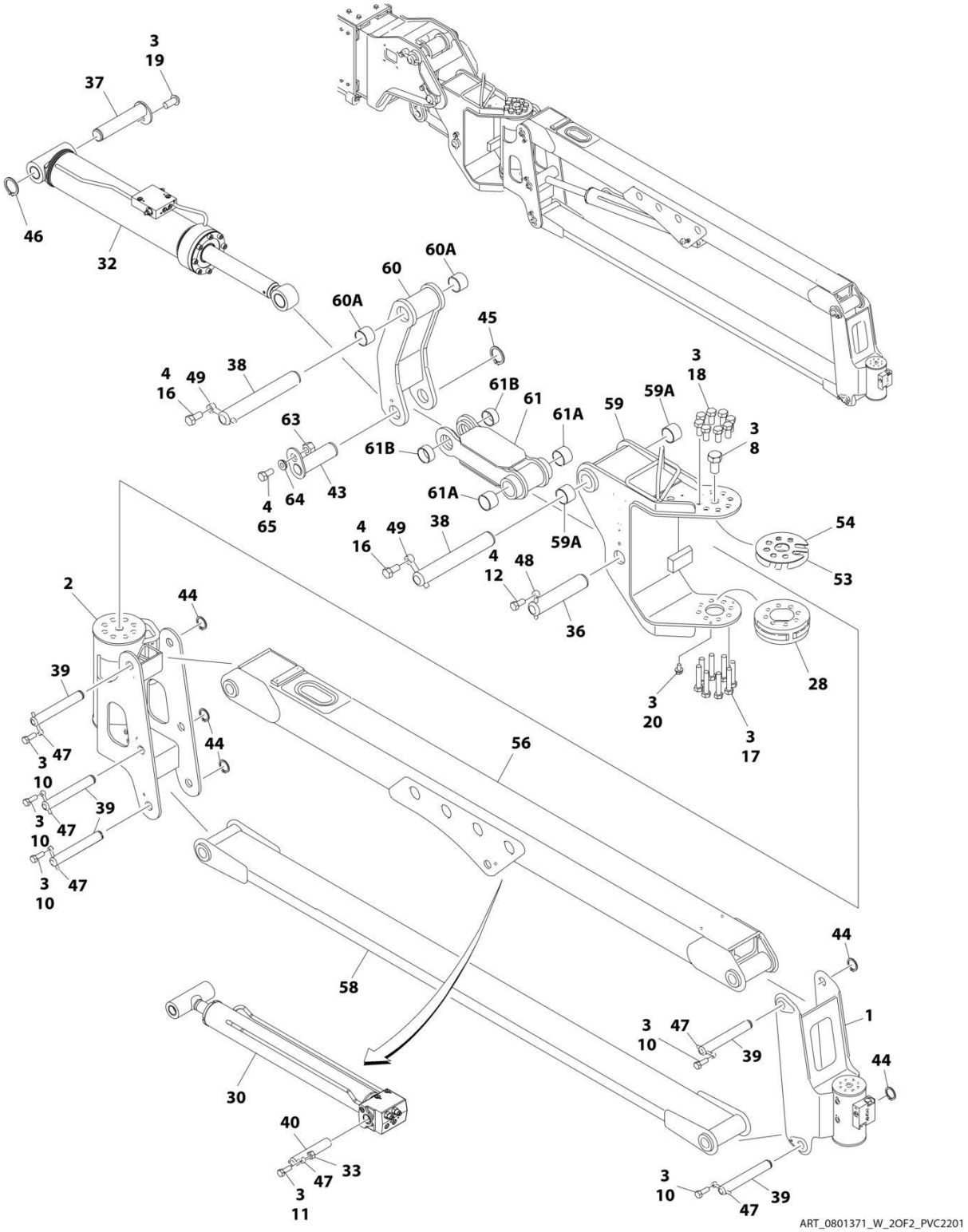
3
19
37
46
32
60A
60
60A
45
4
16
49
38
61B
61
61A
59
59A
3
18
3
8
63
61B
4
65
64
43
61A
4
16
49
38
59A
54
53
4
12
48
36
2
44
39
3
10
47
44
3
20
3
17
28
56
3
10
47
39
3
10
47
58
44
1
3
10
47
39
44
30
40
33
47
3
11
3
10
47
39
ART_0801371_W_2OF2_PVC2201

FIGURE 4-4. MAIN BOOM ASSEMBLY - WITHOUT COLD WEATHER PLUS PACKAGE

ITEM	PART NUMBER	QTY	DESCRIPTION	REV
	0801371	Ref	MAIN BOOM ASSEMBLY - WITHOUT COLD WEATHER PLUS PACKAGE	W
1	1001178247	1	Actuator Assembly (Platform Rotate) (See Separate Breakdown in this Section)	
2	1001178248	1	Actuator Assembly (Jib Rotate) (See Separate Breakdown in this Section)	
3	0100011	AR	Compound, Locking	
4	0100019	AR	Compound, Locking	
5	1001106483	2	Bar, Fiberglass	
6	1001106475	2	Bar, Fiberglass	
7	1001106476	1	Bar, Fiberglass	
8	0630558	1	Bolt, Special	
10	0641607	6	Bolt 3/8 x 7/8	
11	0641610	1	Bolt 3/8 x 1-1/4	
12	0641808	1	Bolt 1/2 x 1-1/8	
13	0641809	12	Bolt 1/2 x 1	
14	0641810	6	Bolt 1/2 x 1-1/4	
15	0641813	6	Bolt 1/2 x 1-5/8	
16	0642010	2	Bolt 5/8 x 1-1/4	
17	0682028	8	Bolt 5/8 x 3-1/2 Grade 8	
18	0682212	8	Bolt 3/4 x 1-1/2 Grade 8	
19	0741806	1	Screw 1/2 x 3/4	
20	0791606	2	Screw 3/8 x 3/4	
21	0801497	1	Base, Boom	
22	0801369	1	Fly, Boom	
23	0811606	12	Screw 3/8 x 3/4	
24	0811607	12	Screw 3/8 x 7/8	
25	0961951	8	Bushing (Part of Items 56 & 61)	
28	1100141	1	Cam	
	SEE NOTE	Ref	Note: Original Jib Cylinder May Have Been Replaced with Service Replacement. Identify PN Stamped on Cylinder Before Ordering Parts.	
30	1001228025	1	Jib Cylinder Assembly (See Separate Breakdown in CYLINDER Section)	
30	1001251025	1	Jib Cylinder Assembly (See Separate Breakdown in CYLINDER Section)	
31	1001228080	1	Telescope Cylinder Assembly (See Separate Breakdown in CYLINDER Section)	
32	1001228034	1	Platform Level Cylinder Assembly (See Separate Breakdown in CYLINDER Section)	
33	3311605	1	Nut 3/8	
34	3340878	8	Pad, Wear	
35	3340974	8	Pad, Wear	
36	3422178	1	Pin	
37	3422937	1	Pin	
38	1001119899	2	Pin	
39	3422957	5	Pin	
40	3422958	1	Pin	
41	3423058	1	Pin	
42	3423059	1	Pin	
43	3423190	1	Pin	
44	3760133	7	Ring, Retaining	

ITEM	PART NUMBER	QTY	DESCRIPTION	REV
45	3760217	1	Ring, Retaining	
46	3760233	1	Ring, Retaining	
47	3841143	7	Keeper, Pin	
48	3841203	1	Keeper, Pin	
49	3841258	2	Keeper, Pin	
51	3900259	4	Bolt, Shoulder	
52	4070864	16	Shim #18 Gauge	
53	4071044	1	Shim #18 Gauge	
54	4071045	1	Shim #11 Gauge	
55	4071073	16	Shim #18 Gauge	
56	4846482	1	Link, Jib (Upper) (Includes Item 25)	
57	4420060	52 ft/16m	Tape, Double-Sided	
58	0801550	1	Link, Jib (Lower)	
59	4630006	1	Pivot	
59A	0962224	2	Bearing	
60	1001200839	1	Link (Upper)	
60A	0962224	2	Bearing	
61	3010136	1	Link (Lower) (Includes Item 25)	
61A	0962224	2	Bearing	
61B	0962556	2	Bearing	
62	4891800	24	Washer 1/2	
63	3272001	1	Nut 5/8	
64	4100101	1	Sleeve, Pin Retainer	
65	0682014	1	Bolt 5/8 x 1-3/4	
66	3020042	AR	Lube, Super (Not Shown)	

FIGURE 4-5. MAIN BOOM ASSEMBLY - WITH COLD WEATHER PLUS PACKAGE

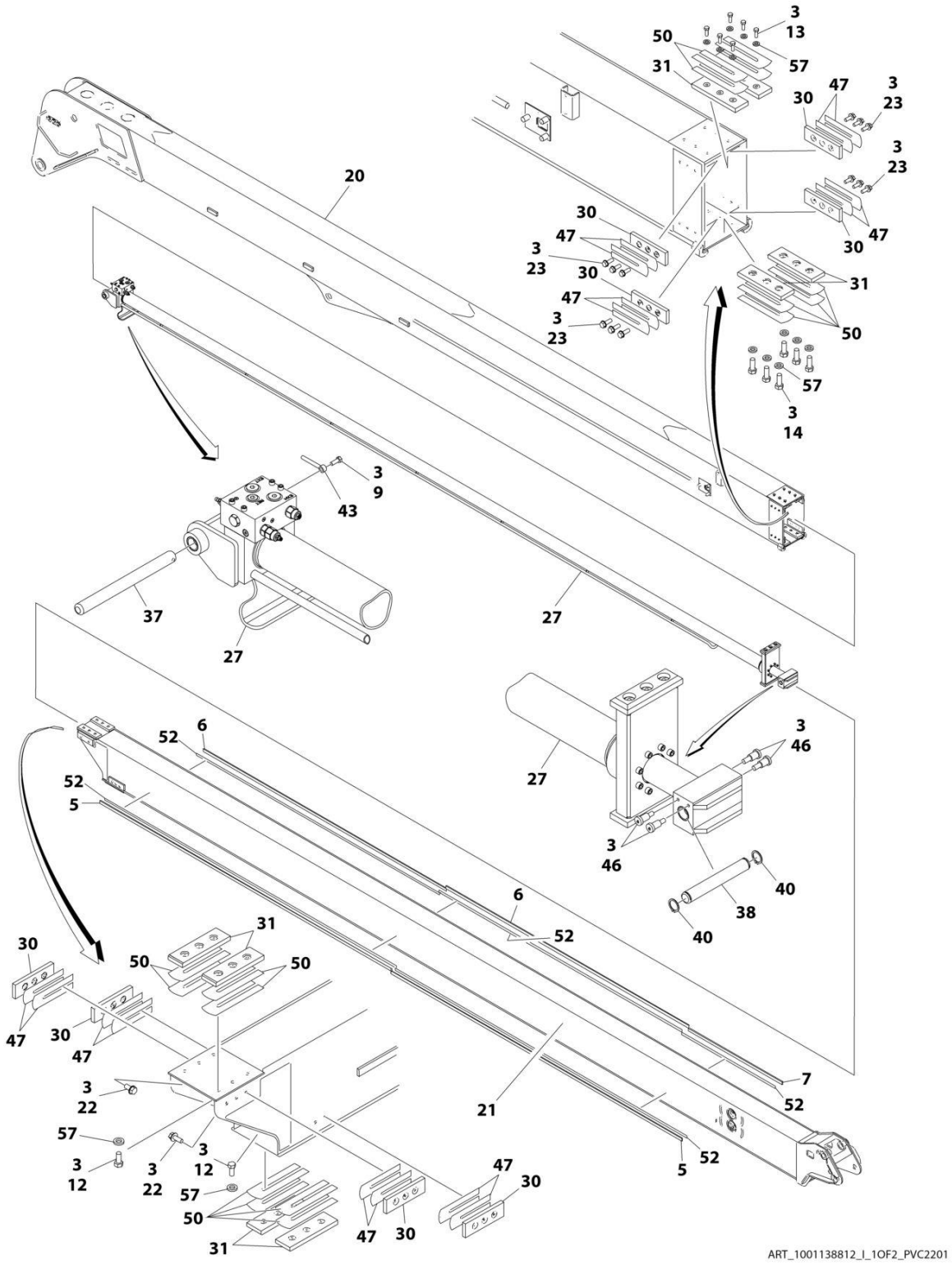

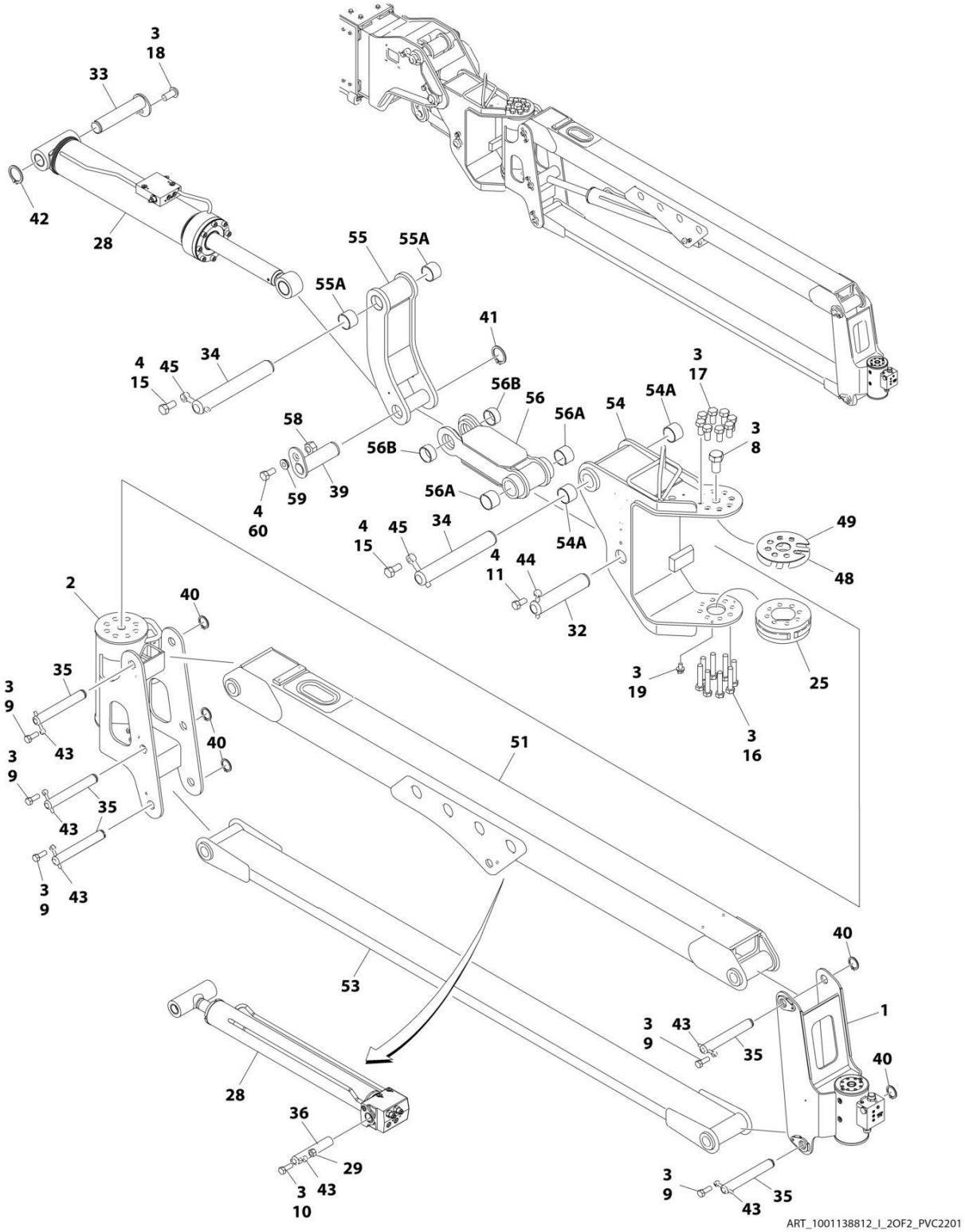
3
18
33
42
28
55
55A
55A
41
4
15
45
34
58
59
39
4
60
56B
56
56A
56B
56A
54
54A
3
17
3
8
4
15
45
34
4
11
44
54A
32
49
48
2
40
35
3
9
43
40
3
9
43
35
3
9
43
51
53
3
19
25
3
16
40
1
3
9
43
35
40
28
36
29
3
10
43
3
9
43
35
ART_1001138812_I_2OF2_PVC2201

FIGURE 4-5. MAIN BOOM ASSEMBLY - WITH COLD WEATHER PLUS PACKAGE

ITEM	PART NUMBER	QTY	DESCRIPTION	REV
	1001138812	Ref	MAIN BOOM ASSEMBLY - WITH COLD WEATHER PLUS PACKAGE	I
1	1001178247	1	Actuator Assembly (Platform Rotate) (See Separate Breakdown in this Section)	
2	1001178248	1	Actuator Assembly (Jib Rotate) (See Separate Breakdown in this Section)	
3	0100011	AR	Compound, Locking	
4	0100019	AR	Compound, Locking	
5	1001106483	2	Bar, Fiberglass	
6	1001106475	2	Bar, Fiberglass	
7	1001106476	1	Bar, Fiberglass	
8	0630558	1	Bolt, Special	
9	0641607	6	Bolt 3/8 x 7/8	
10	0641610	1	Bolt 3/8 x 1-1/4	
11	0641808	1	Bolt 1/2 x 1-1/8	
12	0641809	12	Bolt 1/2 x 1	
13	0641810	6	Bolt 1/2 x 1-1/4	
14	0641813	6	Bolt 1/2 x 1-5/8	
15	0642010	2	Bolt 5/8 x 1-1/4	
16	0682028	8	Bolt 5/8 x 3-1/2 Grade 8	
17	0682212	8	Bolt 3/4 x 1-1/2 Grade 8	
18	0741806	1	Screw 1/2 x 3/4	
19	0791606	2	Screw 3/8 x 3/4	
20	0801497	1	Base, Boom	
21	0801369	1	Fly, Boom	
22	0811606	12	Screw 3/8 x 3/4	
23	0811607	12	Screw 3/8 x 7/8	
24	0961951	8	Bushing (Part of Items 51 & 53)	
25	1100141	1	Cam	
	SEE NOTE	Ref	Note: Original Jib Cylinder May Have Been Replaced with Service Replacement. Identify PN Stamped on Cylinder Before Ordering Parts.	
26	1001228025	1	Jib Cylinder Assembly (See Separate Breakdown in CYLINDER Section)	
26	1001251025	1	Jib Cylinder Assembly (See Separate Breakdown in CYLINDER Section)	
27	1001228080	1	Telescope Cylinder Assembly (See Separate Breakdown in CYLINDER Section)	
28	1001228034	1	Platform Level Cylinder Assembly (See Separate Breakdown in CYLINDER Section)	
29	3311605	1	Nut 3/8	
30	3340878	8	Pad, Wear	
31	3340974	8	Pad, Wear	
32	3422178	1	Pin	
33	3422937	1	Pin	
34	1001119899	2	Pin	
35	3422957	5	Pin	
36	3422958	1	Pin	
37	3423058	1	Pin	
38	3423059	1	Pin	
39	3423190	1	Pin	
40	3760133	7	Ring, Retaining	

ITEM	PART NUMBER	QTY	DESCRIPTION	REV
41	3760217	1	Ring, Retaining	
42	3760233	1	Ring, Retaining	
43	3841143	7	Keeper, Pin	
44	3841203	1	Keeper, Pin	
45	3841258	2	Keeper, Pin	
46	3900259	4	Bolt, Shoulder	
47	4070864	16	Shim #18 Gauge	
48	4071044	1	Shim #18 Gauge	
49	4071045	1	Shim #11 Gauge	
50	4071073	16	Shim #18 Gauge	
51	4846482	1	Link, Jib (Upper) (Includes Item 24)	
52	4420060	52 ft/16m	Tape, Double-Sided	
53	0801550	1	Link, Jib (Lower) (Includes Item 24)	
54	4630006	1	Pivot	
54A	0962224	2	Bearing	
55	1001200839	1	Link (Upper)	
55A	0962224	2	Bearing	
56	3010136	1	Link (Lower)	
56A	0962224	2	Bearing	
56B	0962556	2	Bearing	
57	4891800	24	Washer 1/2	
58	3272001	1	Nut 5/8	
59	4100101	1	Sleeve, Pin Retainer	
60	0682014	1	Bolt 5/8 x 1-3/4	
61	3020042	AR	Lube, Super (Not Shown)	

FIGURE 4-6. PLATFORM ROTATE ASSEMBLY

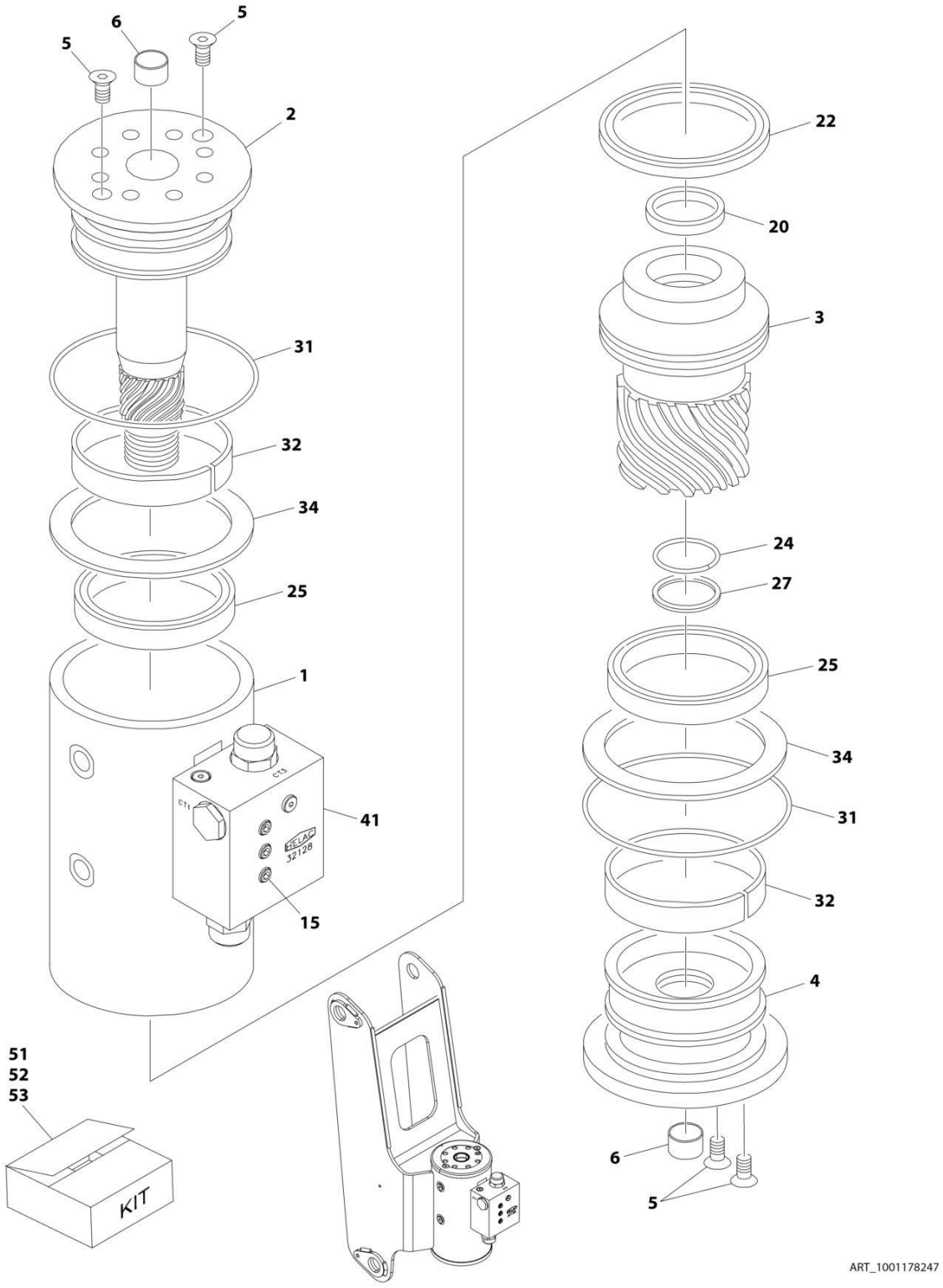

FIGURE 4-6. PLATFORM ROTATE ASSEMBLY

ITEM	PART NUMBER	QTY	DESCRIPTION	REV
	1001178247	Ref	PLATFORM ROTATE ASSEMBLY	A
1	See Note	NSS	Case/Bracket Weldment (Note: Not Available - Purchase Complete Assembly)	
2	7017162	1	Shaft	
3	7017163	1	Sleeve, Piston	
4	7017164	1	Cap, End	
5	See Note	AR	Screw (Note: See Item 53 for Replacement)	
5	See Note	AR	Dowel Pin (Note: See Item 53 for Replacement)	
6	7017195	2	Bushing	
15	See Note	NSS	Capscrew 1/4 x 1-1/2 Grade 8 (Note: Not Available for Purchase)	
20	See Note	1	Seal, Rod (Note: See Item 51 for Replacement Options)	
22	See Note	1	Seal, Piston (Note: See Item 51 for Replacement Options)	
24	See Note	1	Seal, Cap (Note: See Item 51 for Replacement Options)	
25	See Note	2	Packing, Bearing (Note: See Item 51 for Replacement Options)	
27	See Note	1	Ring, Cap Back-up (Note: See Item 51 for Replacement Options)	
31	See Note	2	Seal (Note: See Item 51 for Replacement Options)	
32	See Note	2	Bearing, Shaft (Note: See Item 52 for Replacement)	
34	See Note	2	Thrustwasher (Note: See Item 52 for Replacement)	
41	70001639	1	Motion Control Valve Assembly (Cartridges not serviced separately)	
51	70000342	1	Seal Kit (Includes Items 20, 22, 24, 25, 27 & 31)	
52	7017159	1	Bearing Kit (Includes Items 32 & 34)	
53	7017142	1	Hardware Kit (Includes Item 5 and Plugs)	

FIGURE 4-7. JIB ROTATE ASSEMBLY

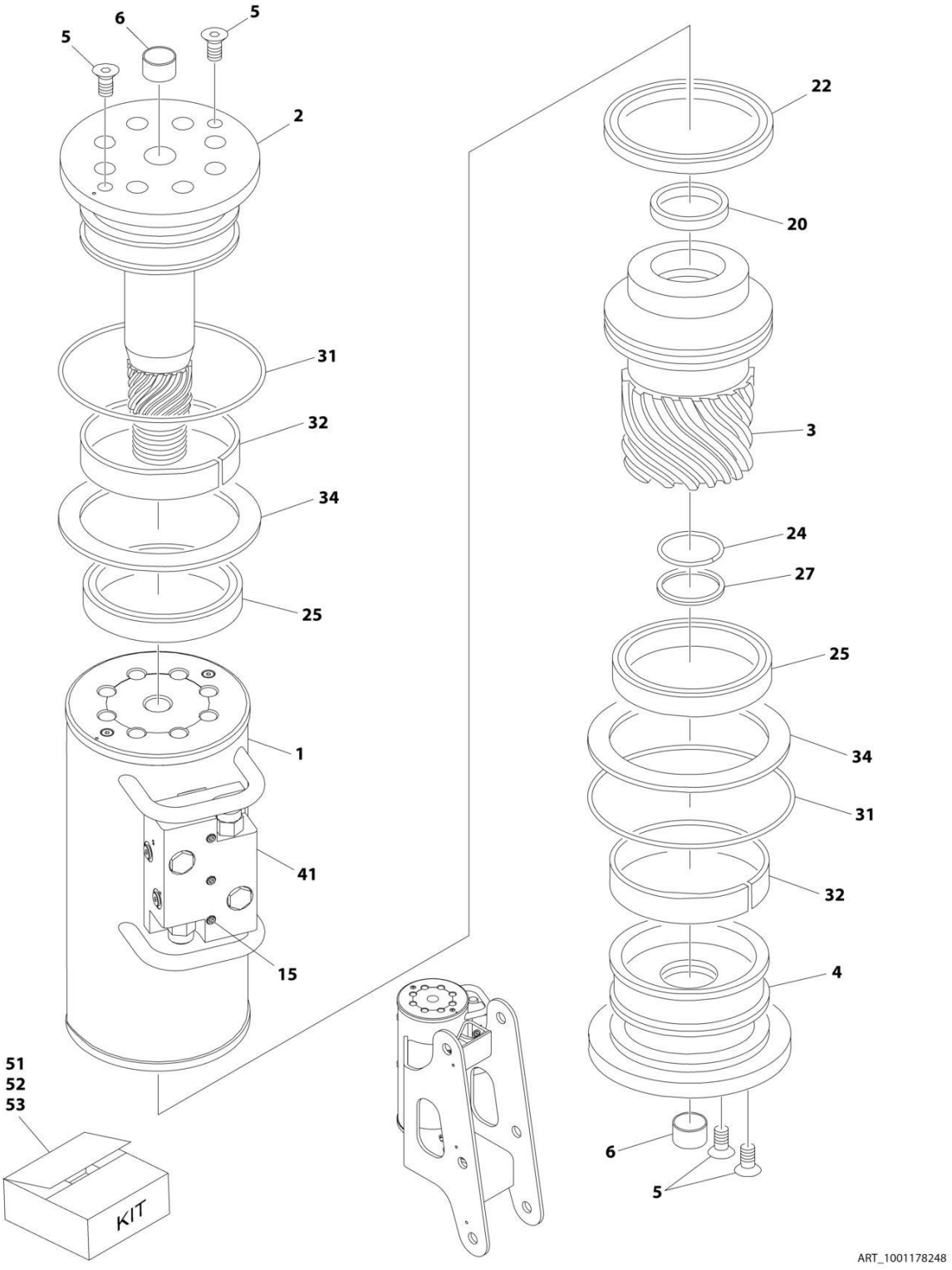

FIGURE 4-7. JIB ROTATE ASSEMBLY

ITEM	PART NUMBER	QTY	DESCRIPTION	REV
	1001178248	Ref	JIB ROTATE ASSEMBLY	A
1	See Note	NSS	Case/Bracket Weldment (Note: Not Available - Purchase Complete Assembly)	
2	7017162	1	Shaft	
3	7017163	1	Sleeve, Piston	
4	7017164	1	Cap, End	
5	See Note	AR	Screw (Note: See Item 53 for Replacement)	
5	See Note	AR	Dowel Pin (Note: See Item 53 for Replacement)	
6	7017195	2	Bushing	
15	See Note	NSS	Capscrew 1/4 x 1-1/2 Grade 8 (Note: Not Available for Purchase)	
20	See Note	1	Seal, Rod (Note: See Item 51 for Replacement Options)	
22	See Note	1	Seal, Piston (Note: See Item 51 for Replacement Options)	
24	See Note	1	Seal, Cap (Note: See Item 51 for Replacement Options)	
25	See Note	2	Packing, Bearing (Note: See Item 51 for Replacement Options)	
27	See Note	1	Ring, Cap Back-up (Note: See Item 51 for Replacement Options)	
31	See Note	2	Seal (Note: See Item 51 for Replacement Options)	
32	See Note	2	Bearing, Shaft (Note: See Item 52 for Replacement)	
34	See Note	2	Thrustwasher (Note: See Item 52 for Replacement)	
41	70002859	1	Motion Control Valve Assembly (Cartridges not serviced separately)	
51	70000796	1	Seal Kit (Includes Items 20, 22, 24, 25, 27 & 31)	
52	7017185	1	Bearing Kit (Includes Items 32 & 34)	
53	70001640	1	Hardware Kit (Includes Item 5 and Plugs)	

FIGURE 4-8. POWER TRACK AND BOOM CLAMPS INSTALLATION (TOWER BOOM)

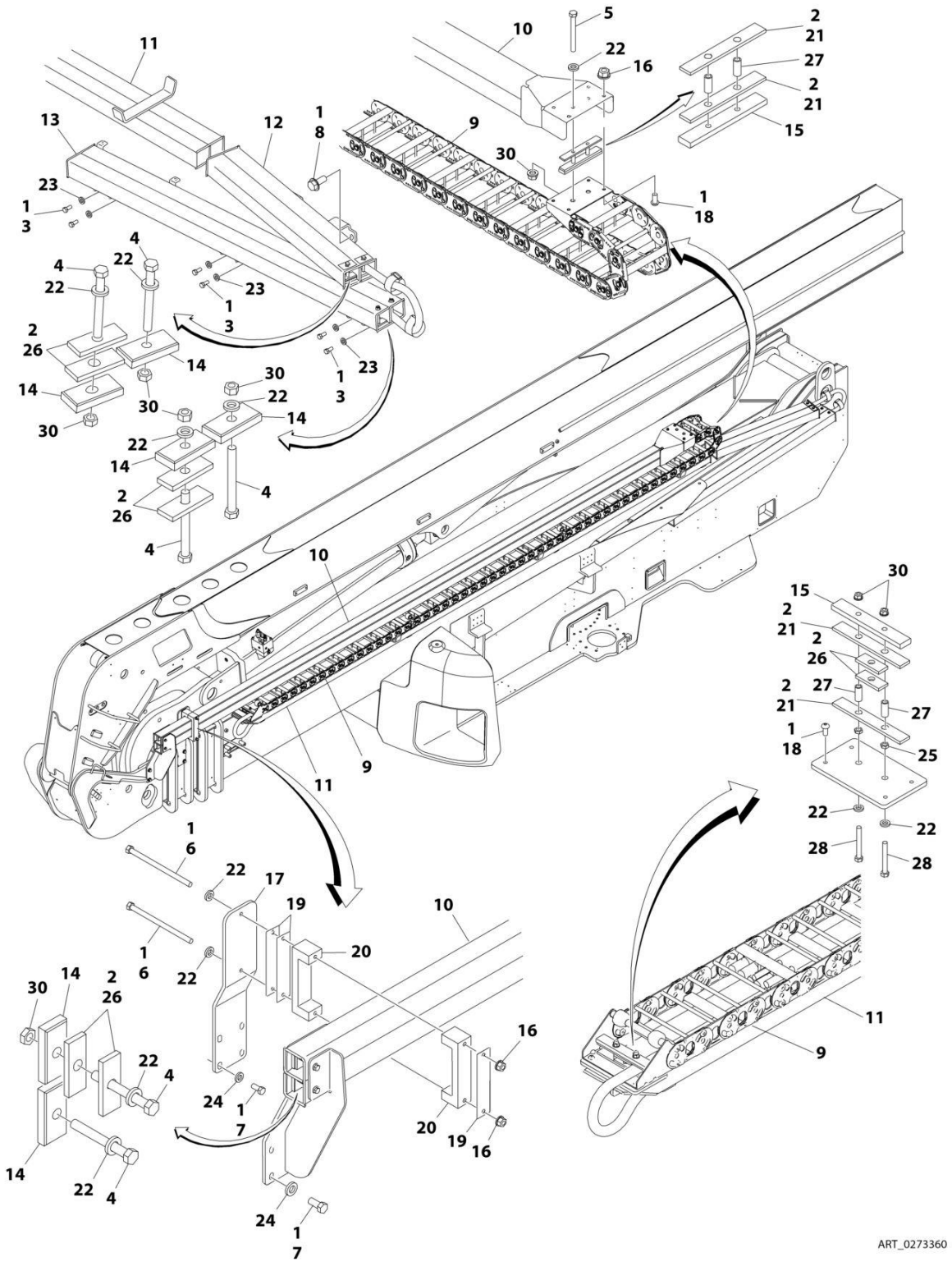

FIGURE 4-8. POWER TRACK AND BOOM CLAMPS INSTALLATION (TOWER BOOM)

ITEM	PART NUMBER	QTY	DESCRIPTION	REV
	0273360	Ref	POWER TRACK AND BOOM CLAMPS INSTALLATION (TOWER BOOM)	F
1	0100011	AR	Compound, Locking	
2	0100081	AR	Adhesive #454	
3	0641606	6	Bolt 3/8 x 3/4	
4	0641628	6	Bolt 3/8 x 3-1/2	
5	0630539	2	Bolt 3/8 x 3-1/2	
6	0641652	2	Bolt 3/8 x 6-1/2	
7	0641809	8	Bolt 1/2 x 1-1/8	
8	0791808	12	Screw 1/2 x 1	
9	1001131730	1	Power Track, Tower Hose	
9	70003919	AR	Repair Section Kit (Includes Inner and Outer Links, Joining Bars and Rollers, and Assembling Hardware)	
9	70003920	1	Mounting Bracket Kit (Includes Mounting Brackets for Both Ends, 1 Roller Assembly and Assembling Hardware)	
10	1180387	1	Tube, Push (Upper Tower Boom)	
11	1180388	1	Tube, Carrier (Lower Tower Boom)	
12	1180389	1	Tube, Carrier (T/T to Tower Boom)	
13	1180390	1	Tube, Carrier (Turntable)	
14	1320288	6	Clamp, Bar	
15	1320328	2	Clamp, Bar	
16	3311608	6	Nut 3/8	
17	3574644	1	Plate, Support	
18	3900283	8	Screw 3/8 x 3/4	
19	4071076	3	Shim	
20	4220189	2	Block, Support	
21	4220190	4	Pad, Rubber	
22	4711600	12	Washer 3/8	
23	4891600	6	Washer 3/8	
24	4891800	8	Washer 1/2	
25	3311602	2	Nut 3/8	
26	3340941	8	Pad, Rubber	
27	4562516	3 in/7.6cm	Tubing, Poly	
28	0630593	2	Bolt 3/8 x 3-1/4	
29	4240155	AR	Strap (Not Shown)	
30	3300492	10	Nut, Lock Nylon Insert	

FIGURE 4-9. POWER TRACK AND BOOM CLAMPS INSTALLATION (MAIN BOOM AND JIB)

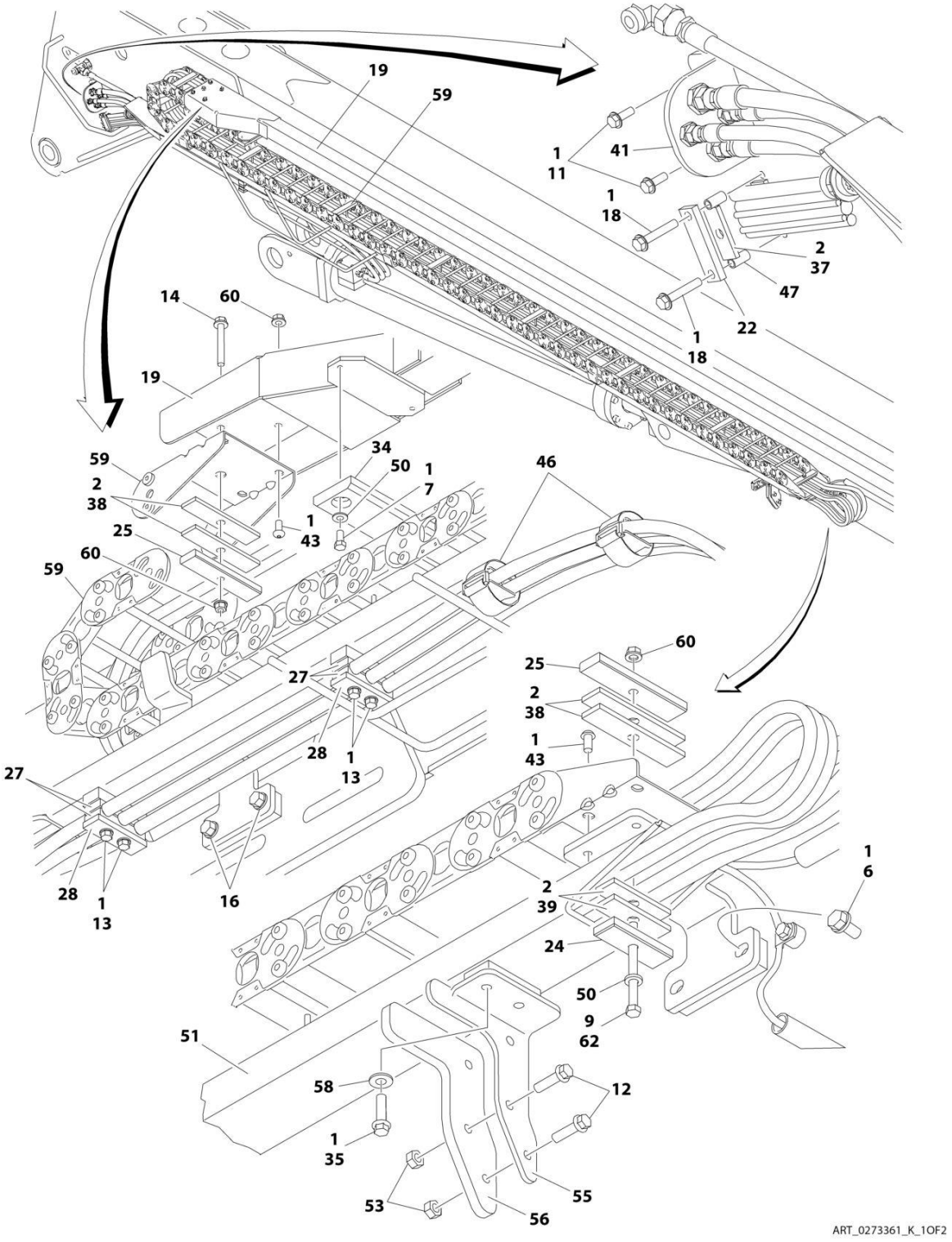

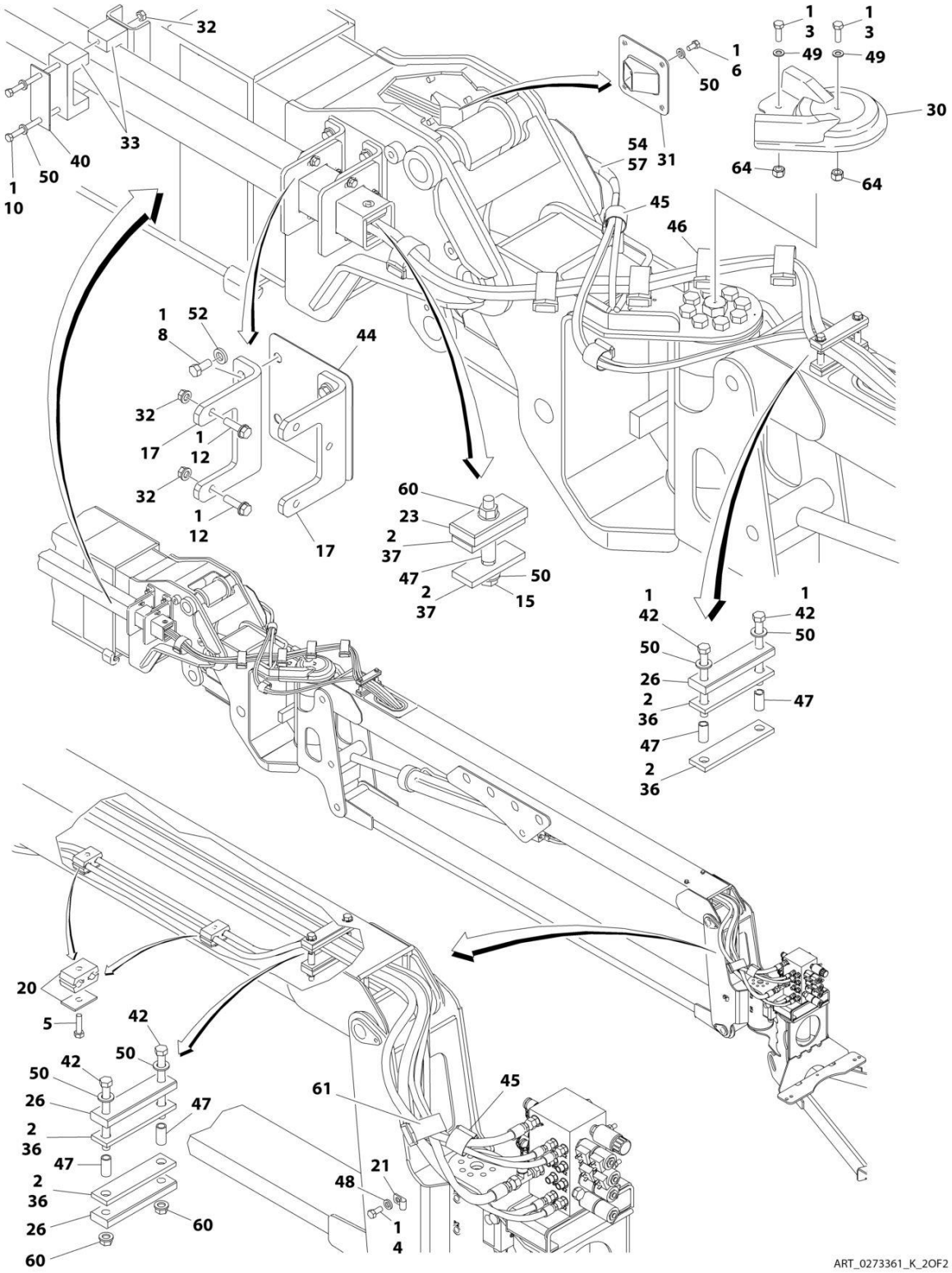
32
33
40
50
1
10
1
6
50
54
57
31
1
3
1
3
49
49
30
64
64
45
46
1
8
52
44
32
17
1
12
32
1
12
17
60
23
2
37
47
2
37
50
15
1
42
1
42
50
50
26
2
36
47
47
2
36
20
5
42
50
42
50
26
2
36
47
47
2
36
26
60
60
61
45
21
48
1
4
ART_0273361_K_2OF2

FIGURE 4-9. POWER TRACK AND BOOM CLAMPS INSTALLATION (MAIN BOOM AND JIB)

ITEM	PART NUMBER	QTY	DESCRIPTION	REV
	0273361	Ref	POWER TRACK AND BOOM CLAMPS INSTALLATION (MAIN BOOM AND JIB)	K
1	0100011	AR	Compound, Locking	
2	0100081	AR	Adhesive #454	
3	0760812	3	Screw M8 x 25	
4	0641406	1	Bolt 1/4 x 3/4	
5	0791510	2	Screw 5/16 x 1-1/4	
6	0641605	4	Bolt 3/8 x 5/8	
7	0641606	2	Bolt 3/8 x 3/4	
8	0641809	4	Bolt 1/2 x 1-1/8	
9	0641638	1	Bolt 3/8 x 4-3/4	
10	0641644	2	Bolt 3/8 x 5-1/2	
11	0791608	2	Screw 3/8 x 1	
12	0791610	10	Screw 3/8 x 1-1/4	
13	0791616	4	Screw 3/8 x 2	
14	0791622	1	Screw 3/8 x 2-3/4	
15	0641626	1	Bolt 3/8 x 3-1/4	
16	0791808	8	Screw 1/2 x 1	
17	0902932	2	Bracket, Mounting	
18	0791618	2	Screw 3/8 x 2-1/4	
19	1180386	1	Tube, Push (Upper Main Boom)	
20	1320159	2	Clamp, Hose	
21	1320263	2	Clamp, Hose	
22	1320277	1	Clamp, Hose	
23	1320288	1	Clamp, Hose	
24	1320289	1	Clamp, Hose	
25	1320294	2	Clamp, Bar	
26	1320296	3	Clamp, Bar	
27	1320325	2	Clamp, Block	
28	1320327	2	Clamp, Cover Plate	
30	1671122	1	Cover, Jib Pivot	
31	2540044	1	Guide, Hose	
32	3311608	12	Nut 3/8	
33	3340764	2	Pad, Push Tube	
34	3340787	NLA	Pad, Wear (Use p/n 1001136469)	
35	0811606	2	Screw 3/8 x 3/4	
36	3340934	4	Pad, Clamp	
37	3340941	4	Pad, Rubber	
38	3340942	4	Pad, Rubber	
39	3340943	2	Pad, Rubber	
40	3538758	1	Plate, Backing	
41	3574606	1	Plate, Bulkhead Mounting	
42	3900260	4	Capscrew 3/8 x 4	
43	3900283	8	Screw 3/8 x 3/4	
44	4071072	1	Shim, Adjusting 16Ga	
45	4240153	AR	Tie-Strap	
46	4240155	AR	Tie-Strap	
47	4562516	7 in/18 cm	Tubing, Poly	
48	4711400	1	Washer 1/4	
49	4811900	6	Washer M8	

ITEM	PART NUMBER	QTY	DESCRIPTION	REV
50	4711600	18	Washer 3/8	
51	4846920	1	Tube, Carrier (Lower Main Boom)	
52	4891800	4	Washer 1/2	
53	3311605	4	Nut 3/8	
54	4240033	AR	Tie-Strap	
55	0902965	1	Bracket, Push Tube Guide	
56	4220197	1	Pad, Guide Tube	
57	4100063	1	Sleeve	
58	4891600	2	Washer 3/8	
59	1001131732	1	Power Track, Main Cable	
59	70003913	AR	Repair Section Kit (Includes Inner and Outer Links, Joining Bars and Rollers, and Assembling Hardware)	
59	70003914	1	Roller Link Section Kit (Includes 1 Roller Assembly and Assembling Hardware)	
59	70003916	1	Mounting Bracket Kit (Includes Mounting Brackets for Both Ends and Assembling Hardware)	
60	3300492	5	Nut, Lock Nylon Insert	
61	4240156	1	Tie-Strap	
62	0641636	1	Bolt 3/8 x 4-1/2	
63	1321385	1	Clamp, Hose Retaining (Located at Platform Rotator - Not Shown)	
64	3290805	3	Nut M8	

FIGURE 4-10. BOOM SENSORS AND SWITCHES INSTALLATION

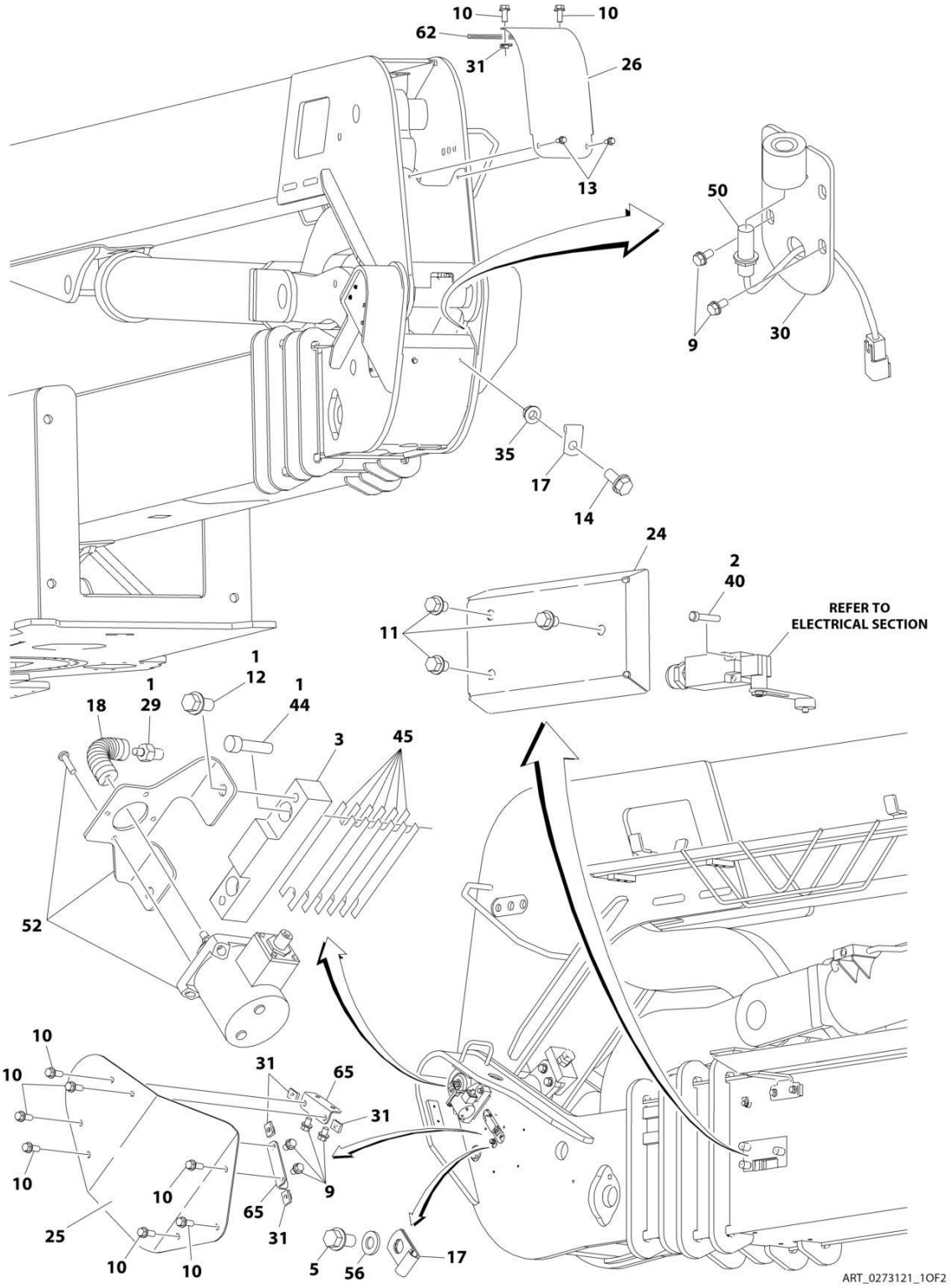

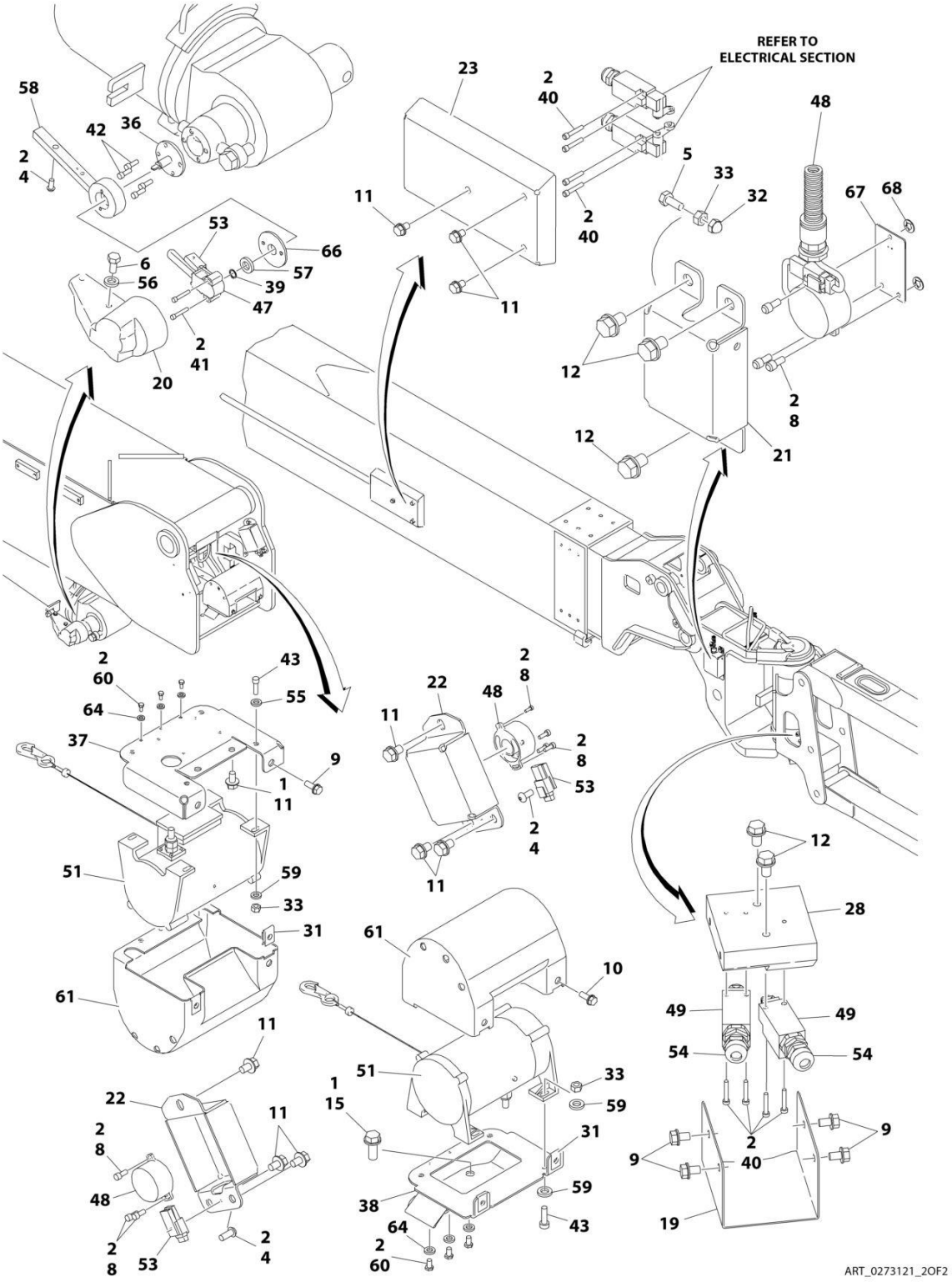
REFER TO
ELECTRICAL SECTION
ART_0273121_2OF2

FIGURE 4-10. BOOM SENSORS AND SWITCHES INSTALLATION

ITEM	PART NUMBER	QTY	DESCRIPTION	REV
	0273121	Ref	BOOM SENSORS AND SWITCHES INSTALLATION	P
1	0100011	AR	Compound, Locking	
2	0100035	AR	Compound, Locking	
3	0363224	2	Bar, Sensor Mounting	
4	0630464	3	Screw #10 x 1/2	
5	0641405	2	Bolt 1/4 x 5/8	
6	0641505	1	Bolt 5/16 x 5/8	
8	3930606	12	Capscrew #6 x 3/8	
9	0791504	17	Screw 5/16 x 1/2	
10	0791506	20	Screw 5/16 x 3/4	
11	0791604	20	Screw 3/8 x 1/2	
12	0791605	12	Screw 3/8 x 5/8	
13	0791606	2	Screw 3/8 x 3/4	
14	0791608	2	Screw 3/8 x 1	
15	0791810	2	Screw 1/2 x 1-1/4	
16	4240018	AR	Tie-Strap (Not Shown)	
17	1320301	7	Clamp, Hose	
18	1660261	2	Coupling, Rotary Sensor	
19	1671039	1	Cover, Jib Switch	
20	1671040	1	Cover, Sensor	
21	1671044	2	Cover, Level Sensor	
22	1671112	2	Cover, Angle Sensor	
23	1671113	2	Cover, Limit Switch	
24	1671117	1	Cover, Limit Switch	
25	3380528	2	Cover, Rotary Sensor	
26	1671123	1	Cover, Main Base Hose	
28	3200433	1	Mount, Jib Switch	
29	3200458	2	Mount, Coupling	
30	4340959	1	Mount, Sensor	
31	3300364	14	Nut, Tinnerman 5/16	
32	3300430	2	Nut 1/4	
33	3311405	10	Nut 1/4	
35	3311608	2	Nut 3/8	
36	3423256	1	Pin, Sensor (Note: Control System must be re-calibrated when Switch is replaced)	
37	4340810	1	Mount, Sensor (Upper)	
38	4340811	1	Mount, Sensor (Lower)	
39	3760383	1	Ring	
40	3930816	14	Capscrew #8 x 1	
41	3931020	2	Capscrew #10 x 1-1/4	
42	3931412	4	Capscrew 1/4 x 3/4	
43	3931414	8	Capscrew 1/4 x 7/8	
44	3931624	4	Capscrew 3/8 x 1-1/2	
45	4071031	12	Shim, Trunnion Keeper	
46	4240033	AR	Tie-Strap (Not Shown)	
47	4360505	1	Switch, Rotary Angle Sensor (Note: Control System must be re-calibrated when Switch is replaced)	
48	1001147479	4	Switch, Digital Angle Sensor (Note: Control System must be re-calibrated when Switch is replaced)	
49	4360548	2	Switch, Plunger	

ITEM	PART NUMBER	QTY	DESCRIPTION	REV
50	4000008	1	Sensor, Proximity Assembly	
51	4360552	2	Switch, Boom Length (Note: Control System must be re-calibrated when Switch is replaced)	
52	4360622	2	Switch, Rotary Transducer (Note: Control System must be re-calibrated when Switch is replaced)	
53	4460914	3	Terminal, Base	
54	4460968	3	Connector, Strain Relief	
55	4711400	8	Washer 1/4	
56	4711500	2	Washer 5/16	
57	4711800	1	Washer 1/2	
58	0200833	1	Arm	
59	4891400	8	Washer 1/4	
60	0721003	6	Screw #10 x 3/8	
61	1671142	2	Cover, Length Sensor	
62	3960389	11 in /28cm	Seal	
63	3960571	1	Seal, Gasket (Not Shown)	
64	4751000	6	Washer #10	
65	4340861	4	Plate, Mounting	
66	0080277	1	Adapter, Angle Sensor Pilot	
67	4341158	2	Mount, Sensor	
68	8310070	6	Pushnut 3/8	

FIGURE 4-11. PLATFORM SUPPORT INSTALLATION

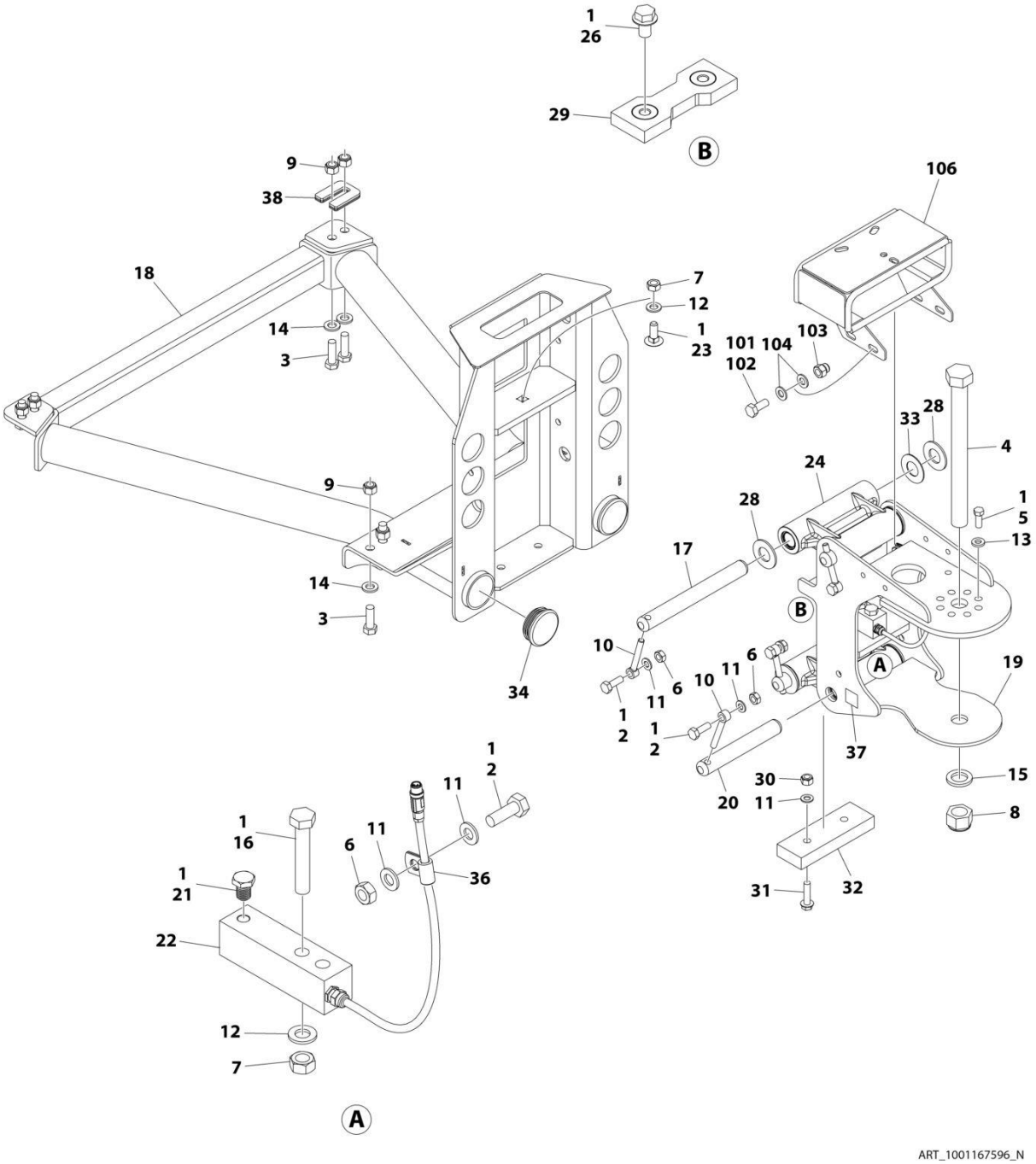

FIGURE 4-11. PLATFORM SUPPORT INSTALLATION

ITEM	PART NUMBER	QTY	DESCRIPTION	REV
	1001167596	Ref	PLATFORM SUPPORT INSTALLATION	N
1	0100011	AR	Compound, Locking	
2	0761014	5	Bolt M10 x 30	
3	0761216	8	Bolt M12 x 40	
4	1001255133	1	Bolt 1 x 11 GRD8	
5	0681608	8	Bolt 3/8 x 1 GRD8	
6	3291001	5	Nut M10	
7	3291201	3	Nut M12	
8	1001174040	1	Nut 1	
9	3291205	8	Nut M12	
10	3841143	4	Keeper, Pin	
11	4812000	8	Washer M10	
12	4812100	3	Washer M12	
13	4891600	8	Washer 3/8	
14	5241200	8	Washer M12	
15	4892600001	1	Washer 1	
16	1001098828	2	Bolt M12 x 70 CL10.9	
17	1001167565	2	Pin	
18	1001200494	1	Support, Platform	
19	1001167567	1	Support, Rotator	
20	1001168402	2	Pin	
21	1001188622	1	Screw	
22	1001247468	1	Loadcell	
23	1001188844	1	Bolt M12 x 35	
24	1001201351	2	Link	
24	1001187382	4	Bearing	
24	1001187383	4	Seal	
26	5251008	2	Bolt M10 x 16 CL10.9	
28	1001189002	8	Bearing	
29	1001190985	1	Pad, Wear	
30	3291005	2	Nut M10	
31	5251016	2	Bolt M10 x 40 CL10.9	
32	1001200491	1	Pad, Wear	
33	1001189001	4	Bearing	
34	1001204725	2	Plug	
36	91203039	1	Clamp	
37	1001216630	2	Decal - Tie Down/No Lift	
38	1001238421	Ref	Kit, Platform Leveling (Not Shown)	
	1001202687	Ref	VALVE MOUNT INSTALLATION	B
101	0100011	AR	Compound, Locking	
102	0760810	4	Bolt M8 x 20	
103	3290806	4	Nut M8	
104	4811900	8	Washer M8	
106	1001208994	1	Mount, Valve	

FIGURE 4-12. CONTROL VALVE INSTALLATION - PLATFORM

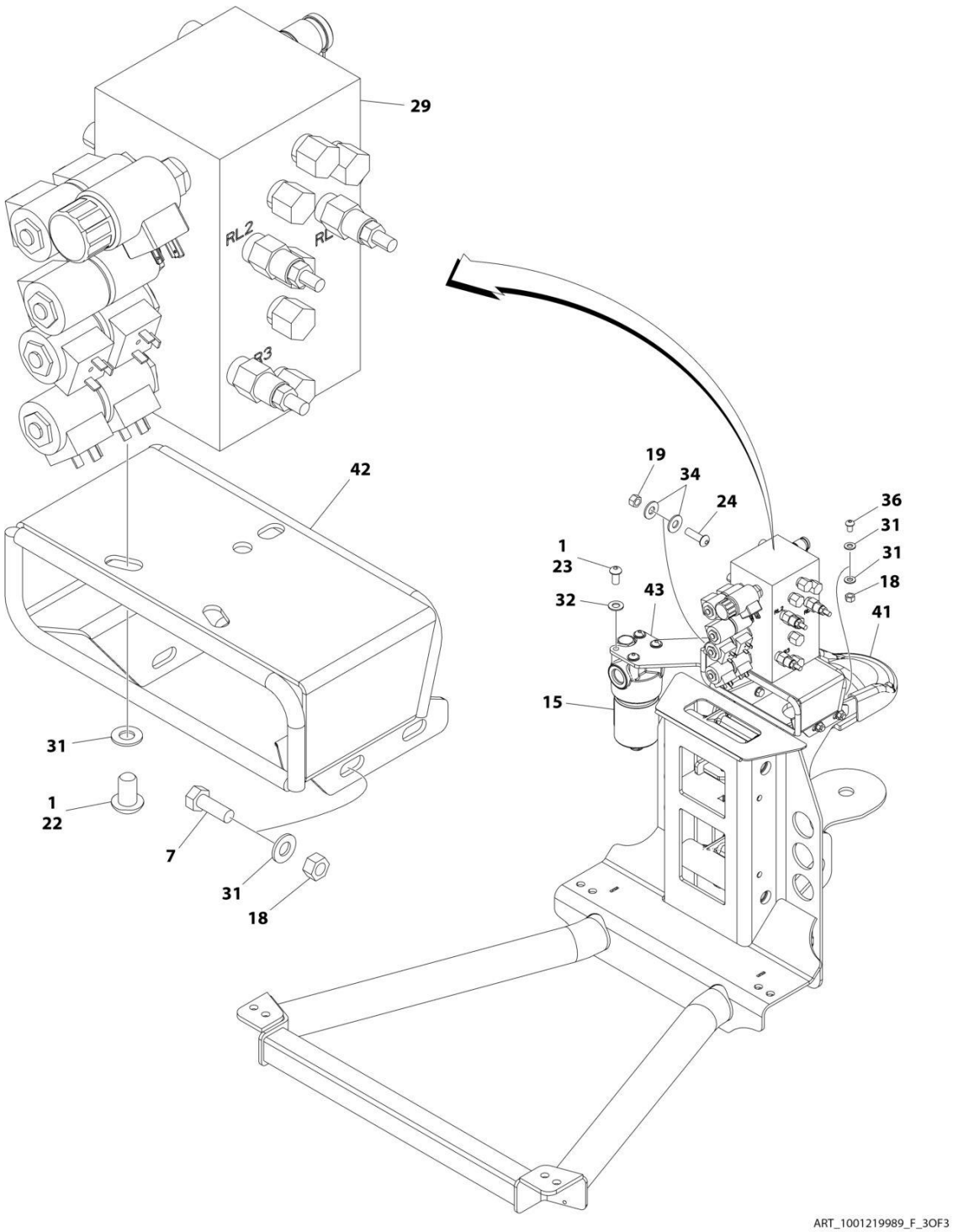

FIGURE 4-12. CONTROL VALVE INSTALLATION - PLATFORM

ITEM	PART NUMBER	QTY	DESCRIPTION	REV
	1001219989	Ref	CONTROL VALVE INSTALLATION - WITH 1 CELL LSS	F
1	0100011	AR	Compound, Locking	
7	0641507	4	Bolt 5/16 x 7/8	
15	2120217	1	Filter, Pressure	
15	70002097	1	Element	
15	70004328	1	Plug, Indicator	
18	3311505	6	Nut 5/16	
19	3311605	2	Nut 3/8	
22	3900210	3	Screw 5/16 x 3/4	
23	3900283	4	Screw 3/8 x 3/4	
24	3900316	2	Screw 3/8 x 1	
29	4641460	1	Platform Valve (See Separate Breakdown in this Section)	
31	4711500	12	Washer 5/16	
32	4711600	4	Washer 3/8	
34	4751600	4	Washer 3/8	
36	88261024	2	Bolt 5/16 x 1	
41	1001207969	1	Cover, Support/Rotator	
42	1001208994	1	Plate, Valve Mounting	
43	1001222314	1	Bracket, Filter Mounting	

FIGURE 4-13. PLATFORM VALVE ASSEMBLY

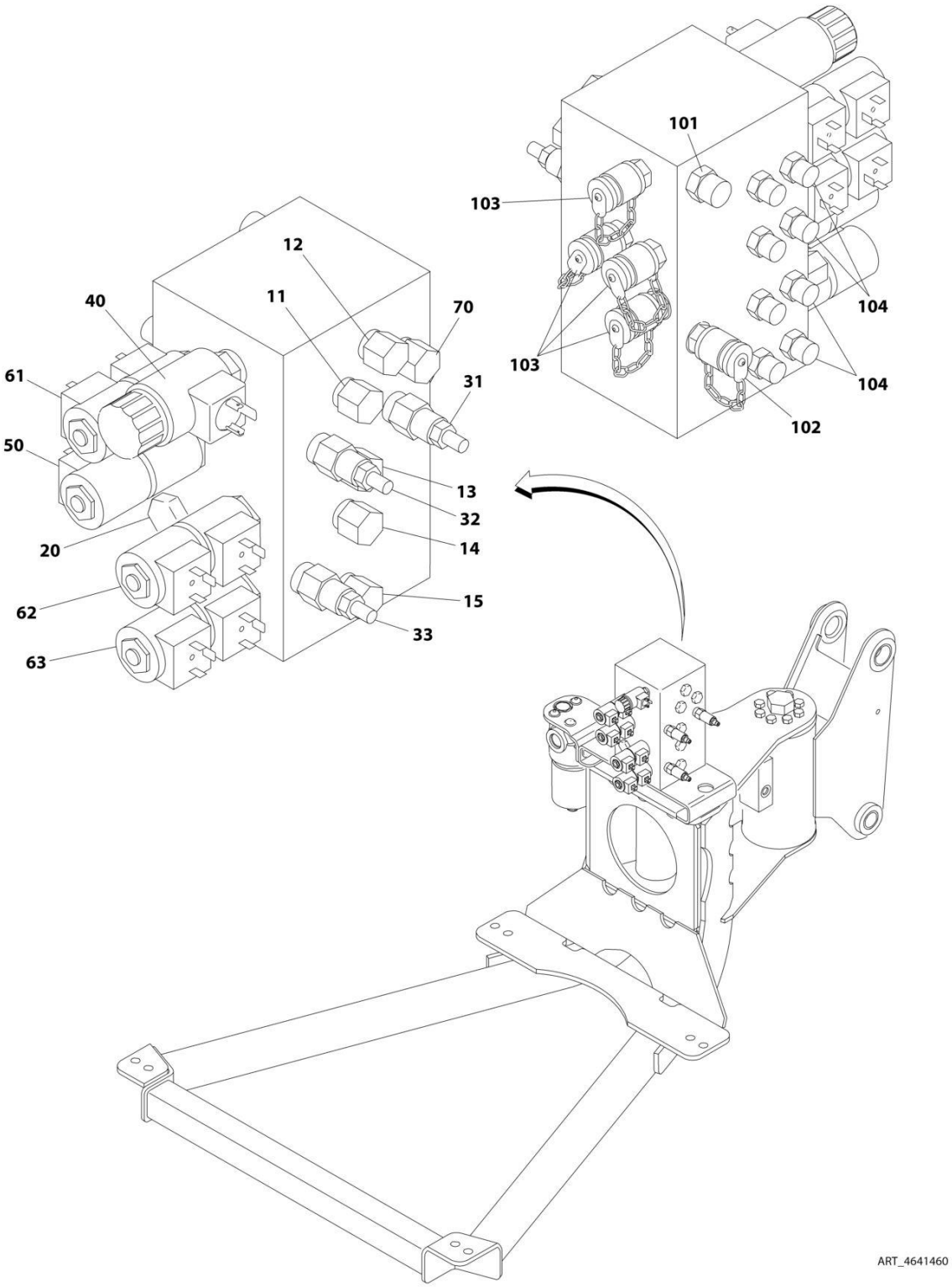

FIGURE 4-13. PLATFORM VALVE ASSEMBLY

ITEM	PART NUMBER	QTY	DESCRIPTION	REV
	4641460	Ref	PLATFORM VALVE ASSEMBLY	C
11	7026018	1	Valve, Cartridge	
11	7011346	1	Seal Kit - Valve	
12	7026019	1	Valve, Cartridge (Flow Control)	
12	7011346	1	Seal Kit - Valve	
13	7026020	1	Valve, Cartridge (Rotate)	
13	7011346	1	Seal Kit - Valve	
14	7026021	1	Valve, Cartridge (Jib Swing)	
14	7011346	1	Seal Kit - Valve	
15	7026019	1	Valve, Cartridge (Jib Lift)	
15	7011346	1	Seal Kit - Valve	
20	7011355	1	Valve, Cartridge (Jib)	
20	2900770	1	Seal Kit - Valve	
31	7024572	1	Valve, Relief Cartridge (Platform Level Up)	
31	7011346	1	Seal Kit - Valve	
32	7024572	1	Valve, Relief Cartridge (Platform Level Down)	
32	7011346	1	Seal Kit - Valve	
33	7024572	1	Valve, Relief Cartridge (Jib Up/Down)	
33	7011346	1	Seal Kit - Valve	
40	7026022	1	Valve, Cartridge (Dump)	
40	2900770	1	Seal Kit - Valve	
40	7024571	1	Coil	
50	7023922	1	Valve, Cartridge (Platform Rotate)	
50	7017402	1	Seal Kit - Valve	
50	7012944	2	Coil	
61	7023922	1	Valve, Cartridge (Platform Level)	
61	7017402	1	Seal Kit - Valve	
61	7012944	2	Coil	
62	7023922	1	Valve, Cartridge (Jib Swing)	
62	7017402	1	Seal Kit - Valve	
62	7012944	2	Coil	
63	7023922	1	Valve, Cartridge (Jib Lift)	
63	7017402	1	Seal Kit - Valve	
63	7012944	2	Coil	
70	7026023	1	Valve, Cartridge (Check)	
70	7011346	1	Seal Kit - Valve	
	4641460	Ref	Platform Valve Assembly (Fitting Information)	C
101	2110606	1	Fitting, Straight	
102	4641255	1	Fitting (Check Valve)	
103	2221086	4	Check, Pressure	
104	2110404	8	Fitting, Straight	

SECTION 5 - PLATFORM

SECTION 5 - PLATFORM

FIGURE 5-1. PLATFORM ASSEMBLY - 36IN X 6FT (91.5CM X 1.83M) WITH SWING GATE

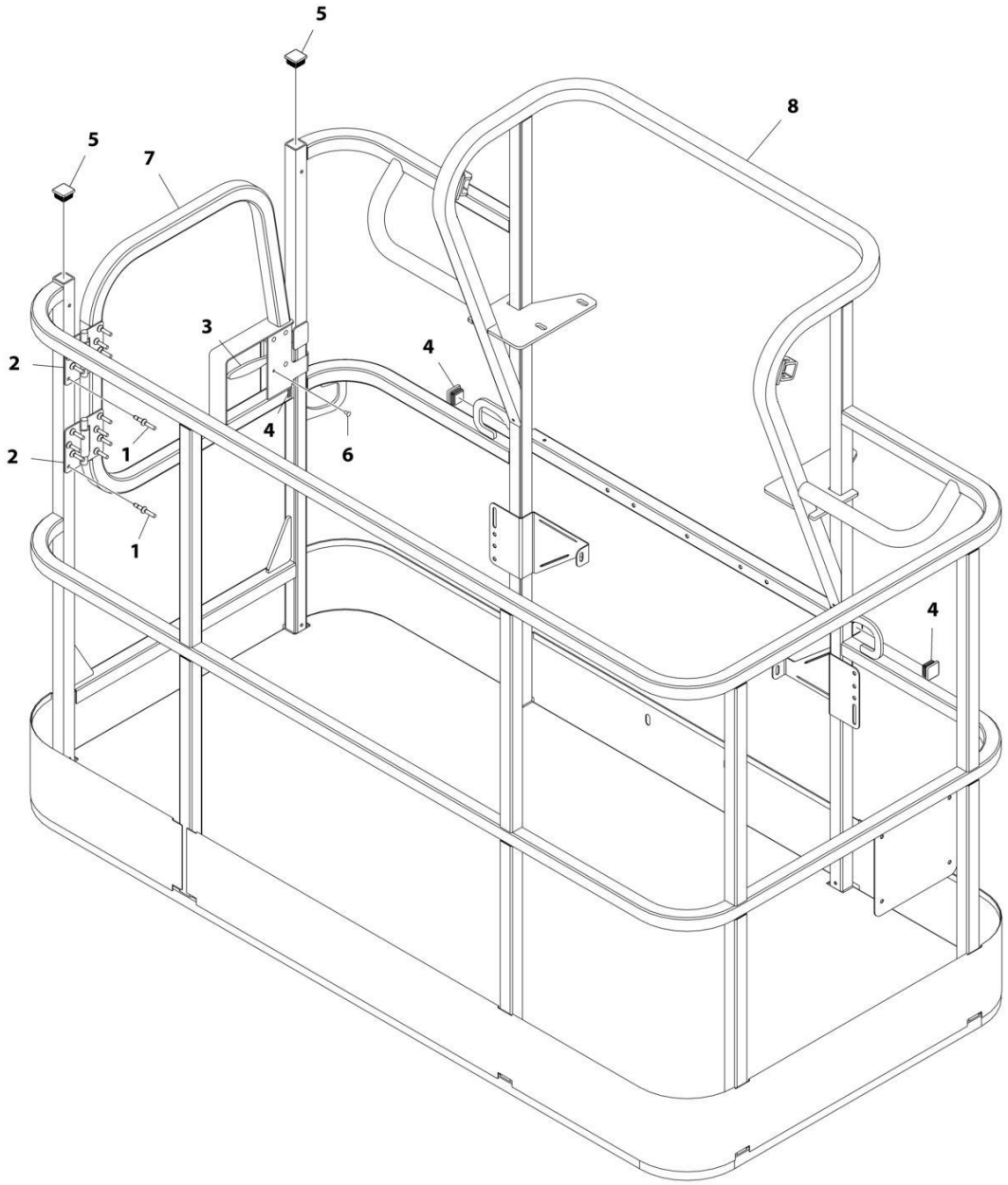

FIGURE 5-1. PLATFORM ASSEMBLY - 36IN X 6FT (91.5CM X 1.83M) WITH SWING GATE

ITEM	PART NUMBER	QTY	DESCRIPTION	REV
	1001186384	Ref	PLATFORM ASSEMBLY - 36IN X 6FT (91.5CM X 1.83M) WITH SWING GATE	C
	See Note	Ref	Note: Platform and Mesh must be ordered separately for Platforms with Mesh. See SPECIAL OPTIONS SECTION for Mesh Installations.	
	See Note	Ref	Note: Replacement Decals Must be Ordered Separately - See DECALS SECTION.	
1	2080040	16	Fastener, Huck	
2	2600281	2	Hinge	
3	2940074	1	Latch	
4	3520072	3	Plug	
5	3520198	2	Plug	
6	3820020	4	Rivet	
7	1001144629	1	Gate	
8	See Note	NSS	Platform (Note: Not Available - Purchase Platform Assembly)	

SECTION 5 - PLATFORM

FIGURE 5-2. PLATFORM ASSEMBLY - 36IN X 8FT (91.5CM X 2.44M) WITH SWING GATE

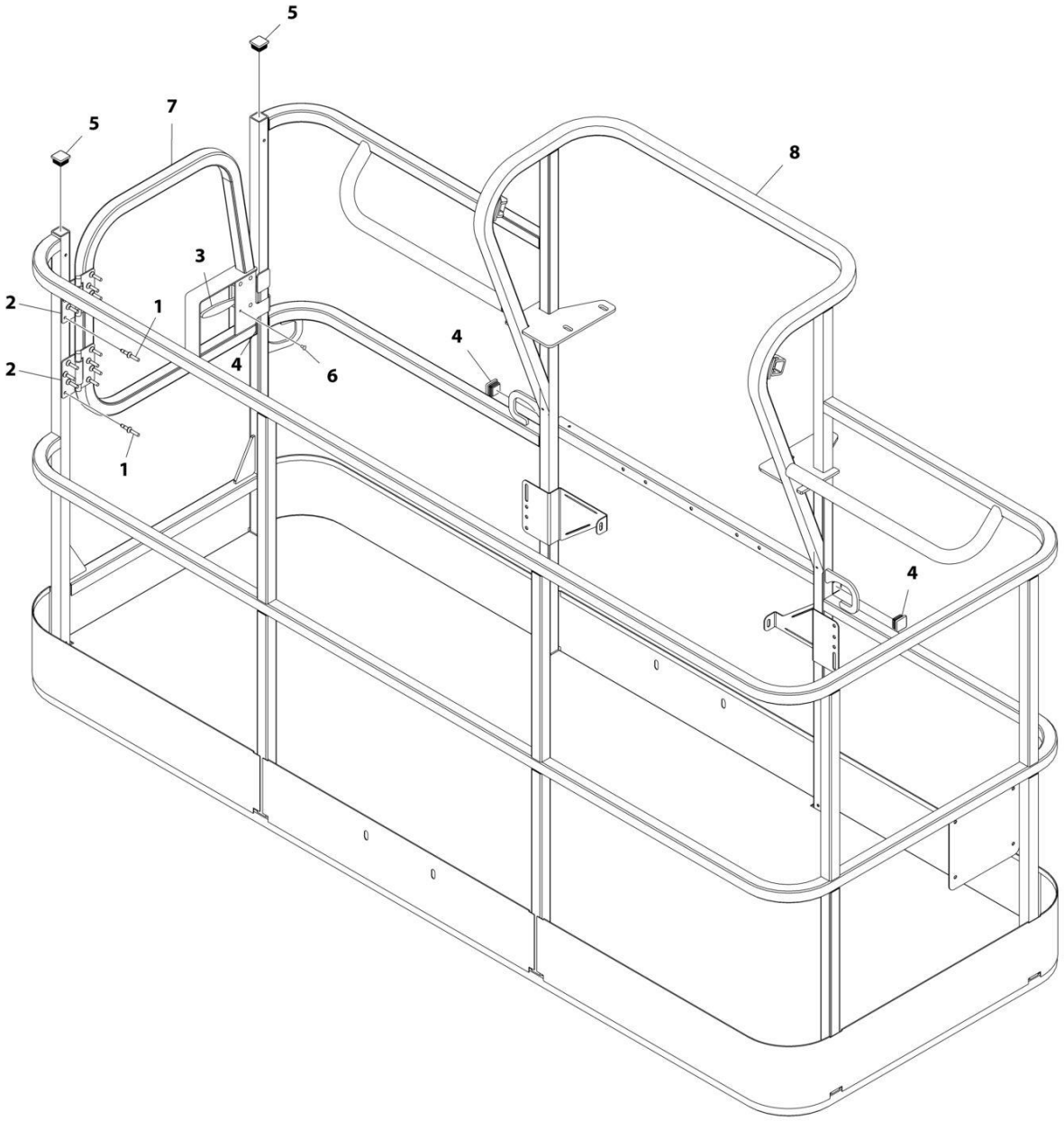

FIGURE 5-2. PLATFORM ASSEMBLY - 36IN X 8FT (91.5CM X 2.44M) WITH SWING GATE

ITEM	PART NUMBER	QTY	DESCRIPTION	REV
	1001186383	Ref	PLATFORM ASSEMBLY - 36IN X 8FT (91.5CM X 2.44M) WITH SWING GATE	D
		Ref	Note: Platform and Mesh must be ordered separately for Platforms with Mesh. See SPECIAL OPTIONS SECTION for Mesh Installations.	
		Ref	Note: Replacement Decals Must be Ordered Separately - See DECALS SECTION.	
1	2080040	16	Fastener, Huck	
2	2600281	2	Hinge	
3	2940074	1	Latch	
4	3520072	3	Plug	
5	3520198	2	Plug	
6	3820020	4	Rivet	
7	1001144629	1	Gate	
8	See Note	NSS	Platform (Note: Not Available - Purchase Platform Assembly)	

SECTION 5 - PLATFORM

FIGURE 5-3. PLATFORM ASSEMBLY - 30IN X 3FT (76CM X .91M) - WITH DROP BAR

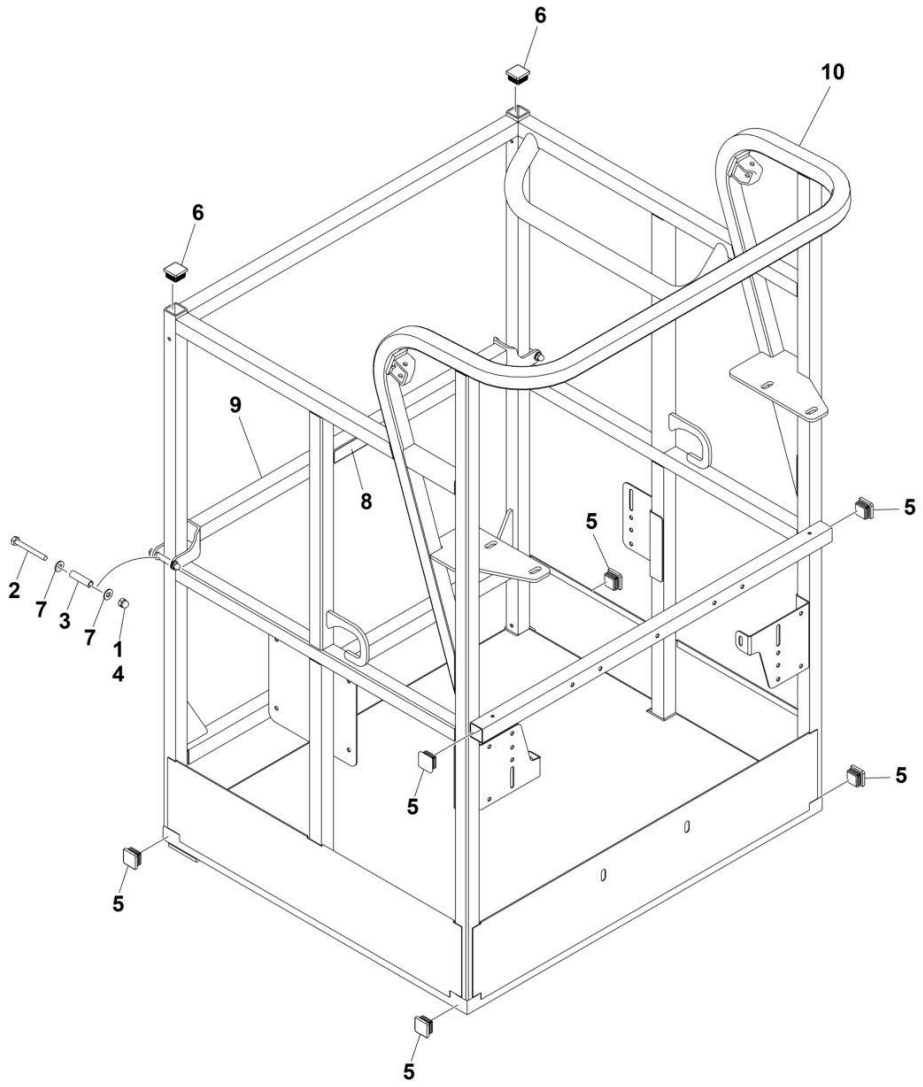

ART_1001228215

FIGURE 5-3. PLATFORM ASSEMBLY - 30IN X 3FT (76CM X .91M) - WITH DROP BAR

ITEM	PART NUMBER	QTY	DESCRIPTION	REV
	1001228215	Ref	PLATFORM ASSEMBLY	A
	See Note	Ref	Note: Platform and Mesh must be ordered separately for Platforms with Mesh. See SPECIAL OPTIONS SECTION for Mesh Installations.	
	See Note	Ref	Note: Replacement Decals Must be Ordered Separately - See DECAL SECTION.	
1	0100011	AR	Compound, Locking	
2	0641418	2	Bolt 1/4 x 2-1/4	
3	0961845	2	Bushing	
4	3300151	2	Nut 1/4	
5	3520072	6	Cap, Plug	
6	3520198	2	Cap, Plug	
7	4711400	4	Washer 1/4	
8	1001140429	1	Decal - Drop Bar	
9	1001226872	1	Bar, Drop	
10	See Note	NSS	Platform (Note: Not Available - Purchase Platform Assembly)	

FIGURE 5-4. PLATFORM ASSEMBLY - 36IN X 6FT (91.5CM X 1.83M) WITH DROP BAR

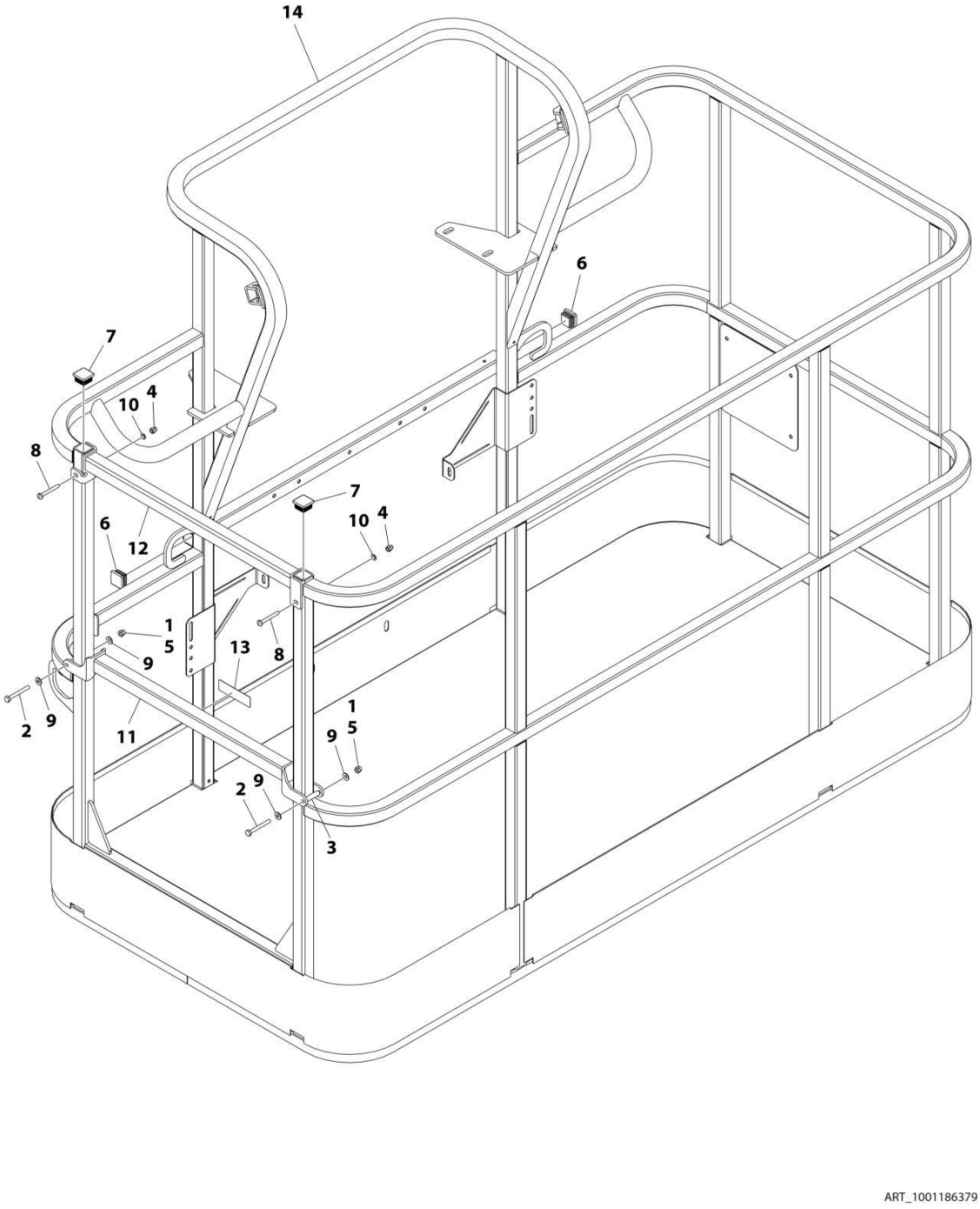

FIGURE 5-4. PLATFORM ASSEMBLY - 36IN X 6FT (91.5CM X 1.83M) WITH DROP BAR

ITEM	PART NUMBER	QTY	DESCRIPTION	REV
	1001186379	Ref	PLATFORM ASSEMBLY - 36IN X 6FT (91.5CM X 1.83M) WITH DROP BAR	B
		Ref	Note: Platform and Mesh must be ordered separately for Platforms with Mesh. See SPECIAL OPTIONS SECTION for Mesh Installations.	
		Ref	Note: Replacement Decals Must be Ordered Separately - See DECALS SECTION.	
1	0100011	AR	Compound, Locking	
2	0641418	2	Bolt 1/4 x 2-1/4	
3	0961845	2	Bushing	
4	3290606	2	Nut M6	
5	3300151	2	Nut 1/4	
6	3520072	2	Plug	
7	3520198	2	Plug	
8	4010618	2	Screw M6 x 50	
9	4711400	4	Washer 1/4	
10	4811700	2	Washer M6	
11	1001138494	1	Bar, Drop	
12	1001138514	1	Rail (Top)	
13	1001140429	1	Decal - Drop Bar	
14	See Note	NSS	Platform (Note: Not Available - Purchase Platform Assembly)	

FIGURE 5-5. PLATFORM ASSEMBLY - 36IN X 8FT (91.5CM X 2.44M) WITH DROP BAR

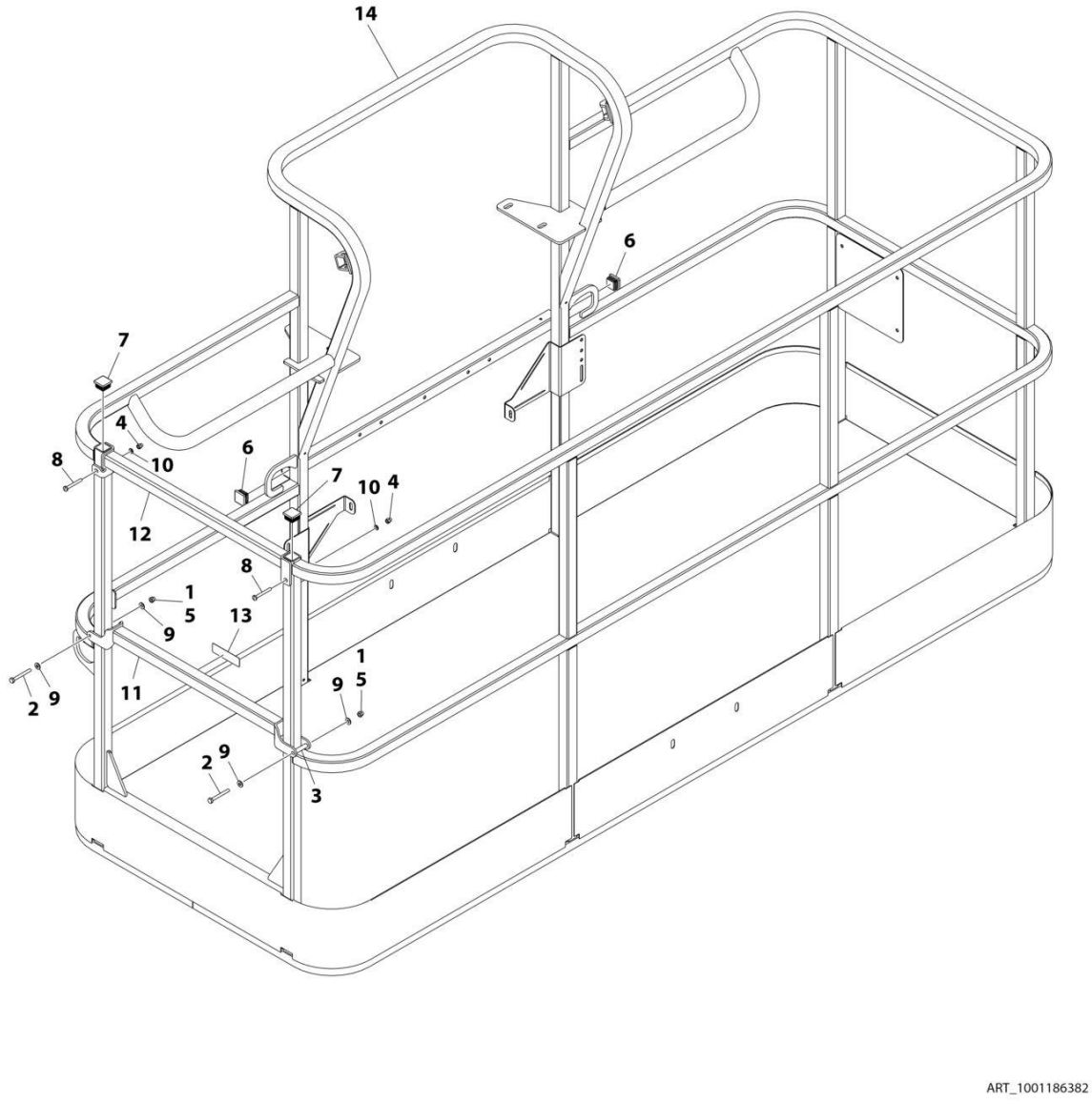

FIGURE 5-5. PLATFORM ASSEMBLY - 36IN X 8FT (91.5CM X 2.44M) WITH DROP BAR

ITEM	PART NUMBER	QTY	DESCRIPTION	REV
	1001186382	Ref	PLATFORM ASSEMBLY - 36IN X 8FT (91.5CM X 2.44M) WITH DROP BAR	C
		Ref	Note: Platform and Mesh must be ordered separately for Platforms with Mesh. See SPECIAL OPTIONS SECTION for Mesh Installations.	
		Ref	Note: Replacement Decals Must be Ordered Separately - See DECALS SECTION.	
1	0100011	AR	Compound, Locking	
2	0641418	2	Bolt 1/4 x 2-1/4	
3	0961845	2	Bushing	
4	3290606	2	Nut M6	
5	3300151	2	Nut 1/4	
6	3520072	2	Plug	
7	3520198	2	Plug	
8	4010618	2	Screw M6 x 50	
9	4711400	4	Washer 1/4	
10	4811700	2	Washer M6	
11	1001138494	1	Bar, Drop	
12	1001138514	1	Rail (Top)	
13	1001140429	1	Decal - Drop Bar	
14	See Note	NSS	Platform (Note: Not Available - Purchase Platform Assembly)	

SECTION 5 - PLATFORM

FIGURE 5-6. PLATFORM ASSEMBLY - 36IN X 6FT (91.5CM X 1.83M) WITH FALL ARREST (ANSI AND ANSI EXPORT SPECS)

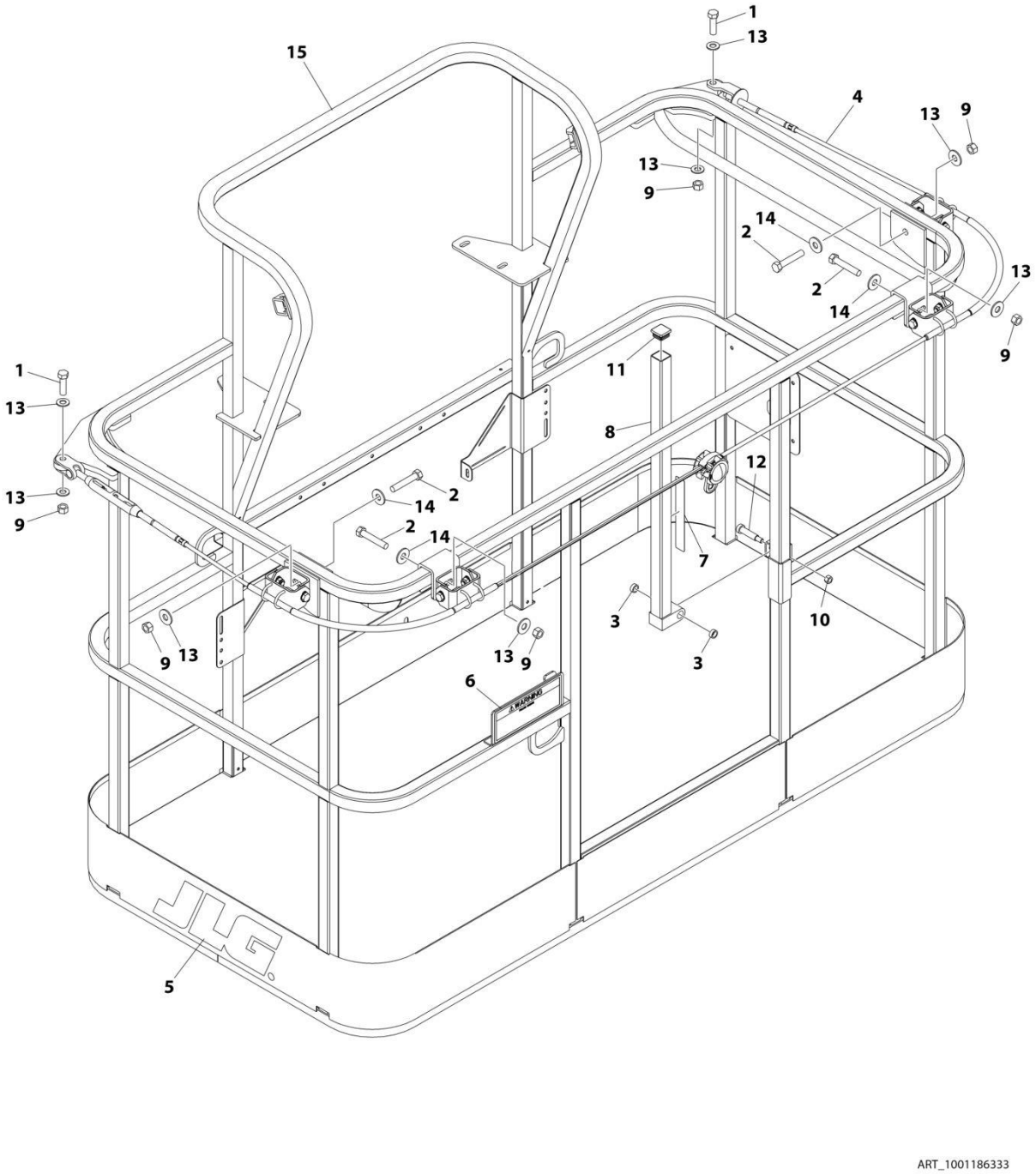

FIGURE 5-6. PLATFORM ASSEMBLY - 36IN X 6FT (91.5CM X 1.83M) WITH FALL ARREST (ANSI AND ANSI EXPORT SPECS)

ITEM	PART NUMBER	QTY	DESCRIPTION	REV
	1001186333	Ref	PLATFORM ASSEMBLY	C
		Ref	Note: Replacement Decals Must be Ordered Separately - See DECALS SECTION.	
1	0681814	2	Bolt 1/2 x 1-3/4 Grade 8	
2	0681822	4	Bolt 1/2 x 2-3/4 Grade 8	
3	0962270	2	Bearing	
4	1001203655	1	Cable	
5	1702773	1	Decal - JLG	
6	1705014	1	Decal - Safety	
7	1706385	1	Decal - Drop Bar	
8	2410014	1	Bar, Drop	
9	3271805	6	Nut 1/2 Grade 8	
10	3311605	1	Nut 3/8	
11	3520072	1	Plug	
12	3900054	1	Bolt 1/2 x 1-3/4	
13	4711800	8	Washer 1/2	
14	4751800	4	Washer 1/2	
15	See Note	NSS	Platform (Note: Not Available - Purchase Platform Assembly)	

SECTION 5 - PLATFORM

FIGURE 5-7. PLATFORM ASSEMBLY - 36IN X 8FT (91.5CM X 2.44M) WITH FALL ARREST (ANSI AND CSA SPECS)

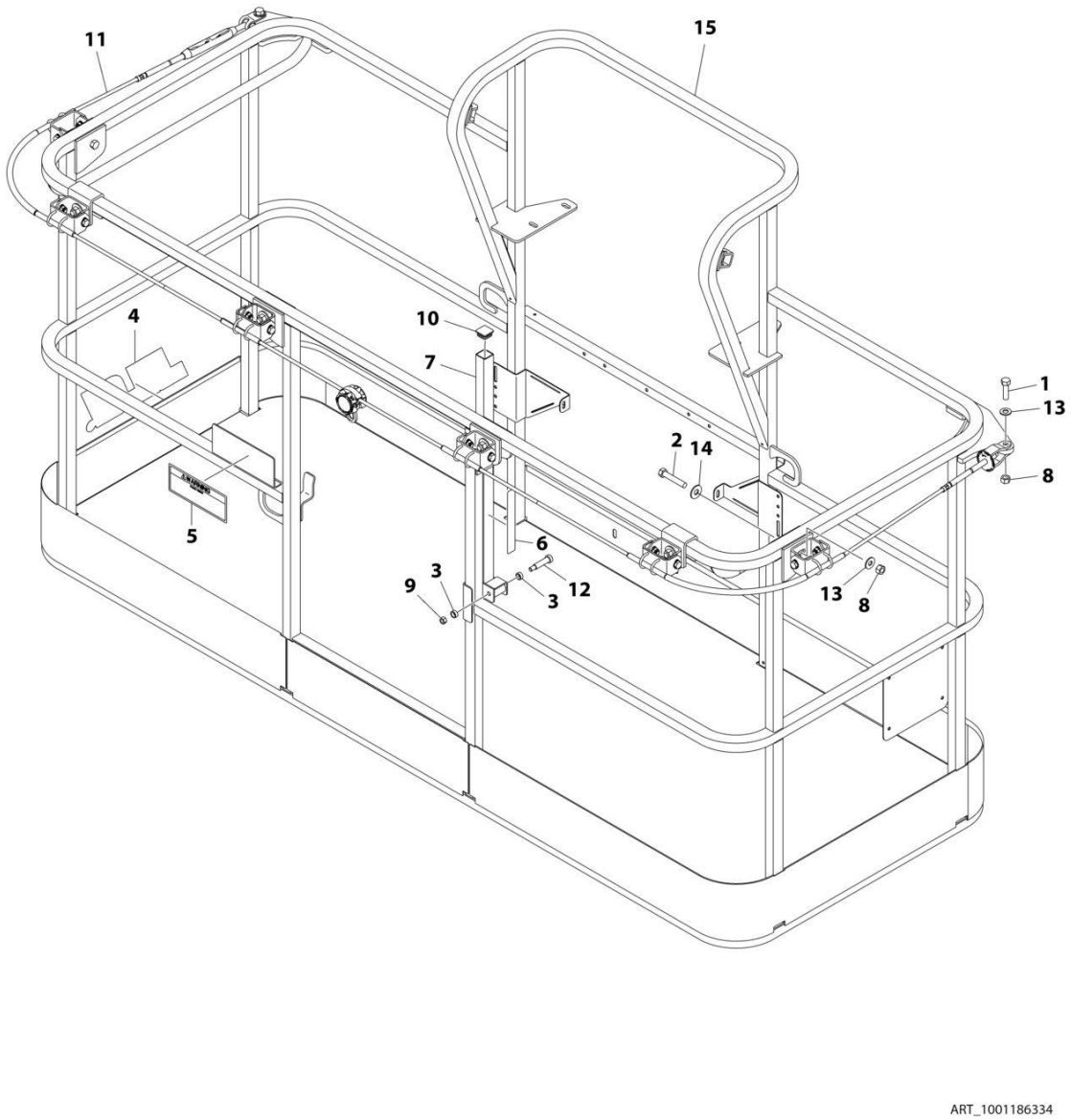

FIGURE 5-7. PLATFORM ASSEMBLY - 36IN X 8FT (91.5CM X 2.44M) WITH FALL ARREST (ANSI AND CSA SPECS)

ITEM	PART NUMBER	QTY	DESCRIPTION	REV
	1001186334	Ref	PLATFORM ASSEMBLY	D
		Ref	Note: Replacement Decals Must be Ordered Separately - See DECALS SECTION.	
1	0681814	2	Bolt 1/2 x 1-3/4 Grade 8	
2	0681822	6	Bolt 1/2 x 2-3/4 Grade 8	
3	0962270	2	Bearing	
4	1702773	1	Decal - JLG	
5	1705014	1	Decal - Safety	
6	1706385	1	Decal - Drop Bar	
7	2410014	1	Bar, Drop	
8	3271805	8	Nut 1/2 Grade 8	
9	3311605	1	Nut 3/8	
10	3520072	1	Plug	
11	1001203656	1	Cable	
12	3900054	1	Bolt 1/2 x 1-3/4	
13	4711800	2	Washer 1/2	
14	4751800	6	Washer 1/2	
15	See Note	NSS	Platform (Note: Purchase Platform Assembly)	

SECTION 5 - PLATFORM

FIGURE 5-8. PLATFORM ASSEMBLY - 36IN X 6FT (91.5CM X 1.83M) TRI-ENTRY WITH SWING GATE

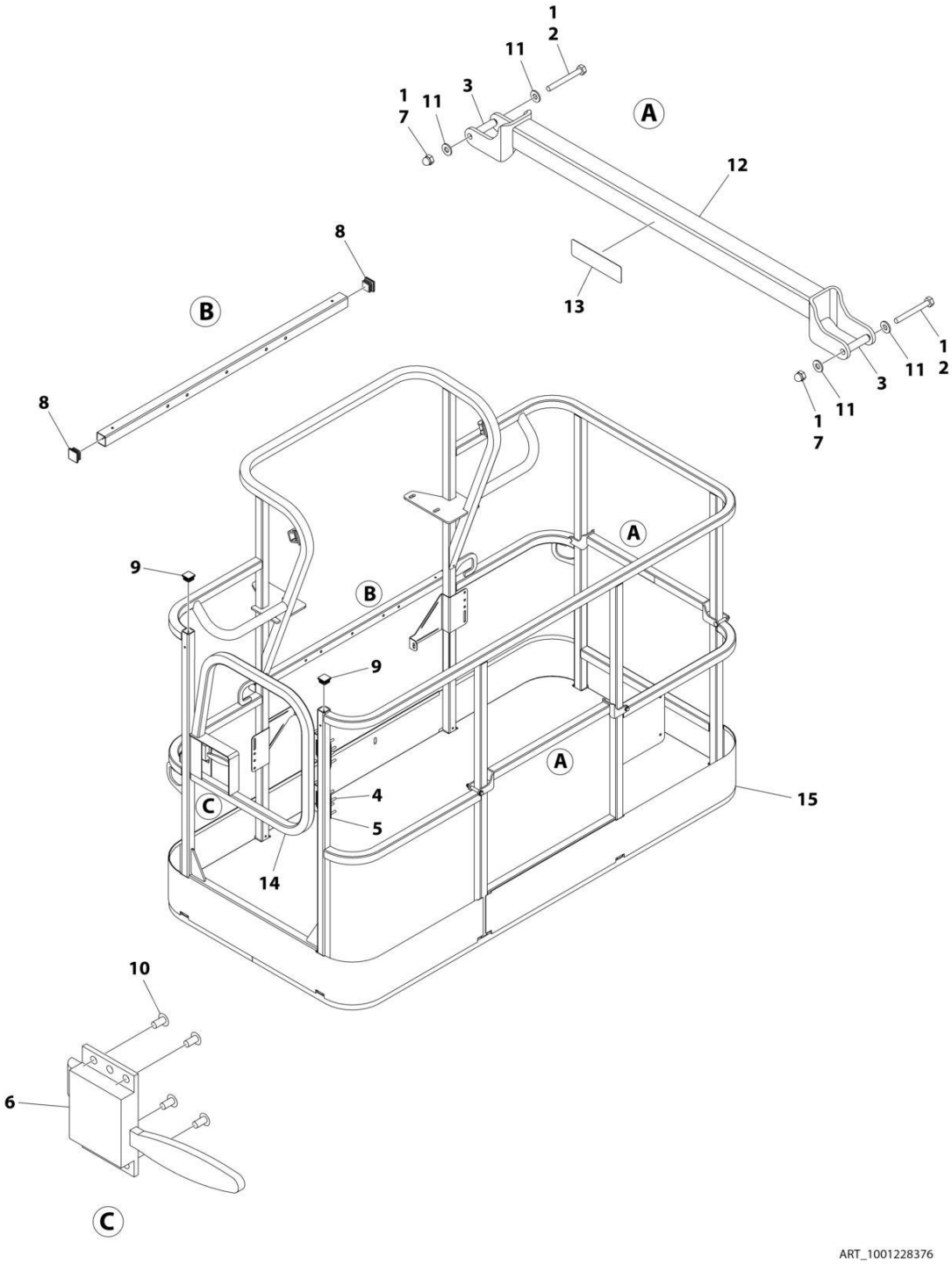

FIGURE 5-8. PLATFORM ASSEMBLY - 36IN X 6FT (91.5CM X 1.83M) TRI-ENTRY WITH SWING GATE

ITEM	PART NUMBER	QTY	DESCRIPTION	REV
	1001228376	Ref	PLATFORM ASSEMBLY - 36IN x 6FT (91.5CM x 1.83M)	B
		Ref	Note: Platform and Mesh must be ordered separately for Platforms with Mesh. See SPECIAL OPTIONS SECTION for Mesh Installations.	
		Ref	Note: Replacement Decals Must be Ordered Separately - See DECAL SECTION.	
1	0100011	AR	Compound, Locking	
2	0641418	4	Bolt 1/4 x 2-1/4	
3	0961845	4	Bushing	
4	2080040	16	Fastener	
5	2600281	2	Hinge	
6	2940074	1	Latch	
7	3300151	4	Nut 1/4	
8	3520072	3	Plug	
9	3520198	2	Plug	
10	3820020	4	Rivet	
11	4711400	8	Washer 1/4	
12	1001138494	2	Bar, Drop	
13	1001140429	2	Decal - Drop Bar	
14	1001144629	1	Gate	
15	See Note	NSS	Platform (Note: Not Available - Purchase Platform Assembly)	

SECTION 5 - PLATFORM

FIGURE 5-9. PLATFORM ASSEMBLY - 36IN X 6FT (91.5CM X 1.83M) TRI-ENTRY WITH DROP BAR

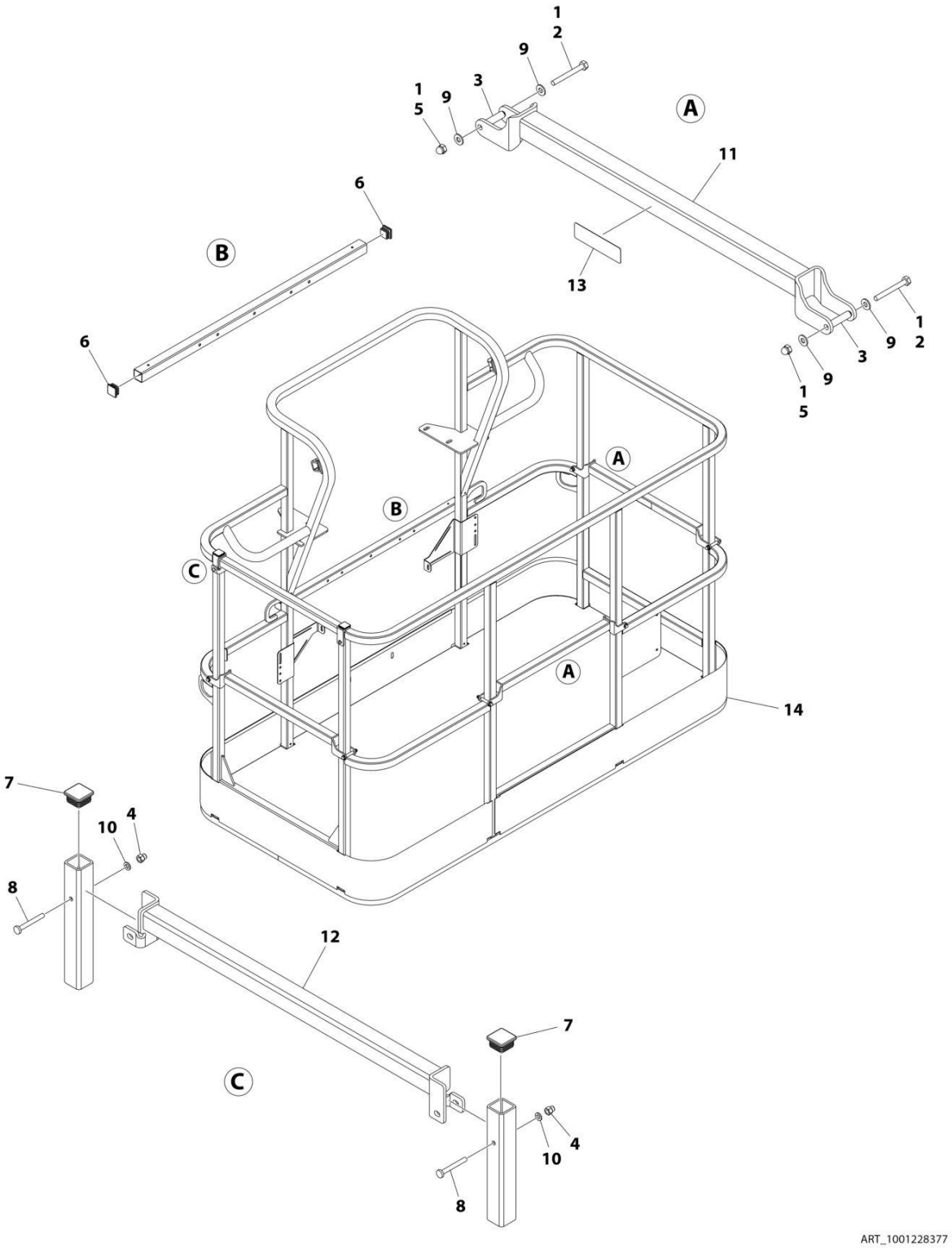

FIGURE 5-9. PLATFORM ASSEMBLY - 36IN X 6FT (91.5CM X 1.83M) TRI-ENTRY WITH DROP BAR

ITEM	PART NUMBER	QTY	DESCRIPTION	REV
	1001228377	Ref	PLATFORM ASSEMBLY - 36IN x 6FT (91.5CM x 1.83M)	B
		Ref	Note: Platform and Mesh must be ordered separately for Platforms with Mesh. See SPECIAL OPTIONS SECTION for Mesh Installations.	
		Ref	Note: Replacement Decals Must be Ordered Separately - See DECAL SECTION.	
1	0100011	1	Compound, Locking	
2	0641418	6	Bolt 1/4 x 2-1/4	
3	0961845	6	Bushing	
4	3290606	2	Nut M6	
5	3300151	6	Nut 1/4	
6	3520072	2	Plug	
7	3520198	2	Plug	
8	4010618	2	Screw M6 x 50	
9	4711400	12	Washer 1/4	
10	4811700	2	Washer M6	
11	1001138494	3	Bar, Drop	
12	1001138514	1	Rail (Top)	
13	1001140429	3	Decal - Drop Bar	
14	See Note	NSS	Platform, Weldment (Note: Not Available - Purchase Platform Assembly)	

SECTION 5 - PLATFORM

FIGURE 5-10. PLATFORM ASSEMBLY - 36IN X 8FT (91.5CM X 2.44M) TRI-ENTRY WITH DROPBAR

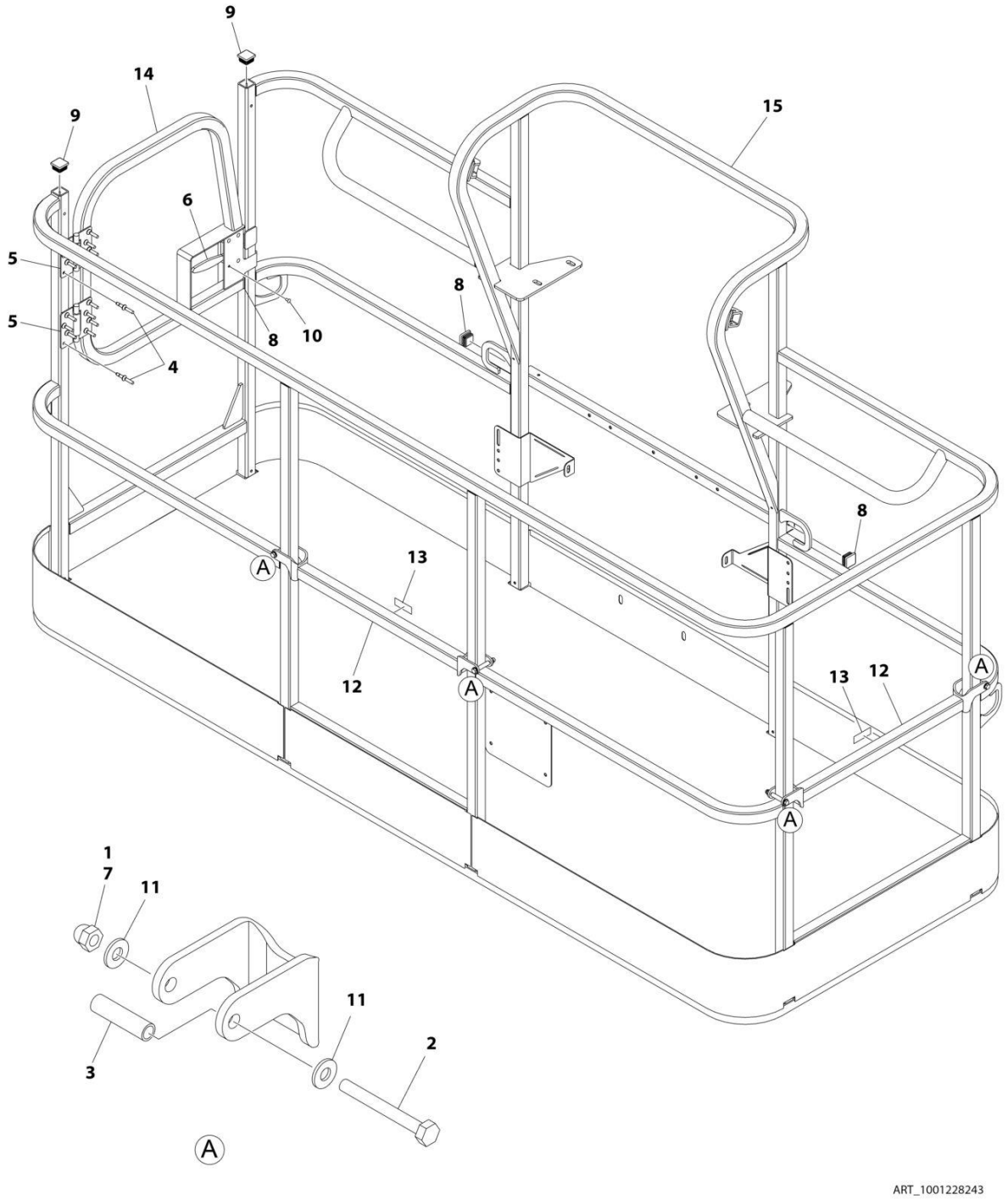

FIGURE 5-10. PLATFORM ASSEMBLY - 36IN X 8FT (91.5CM X 2.44M) TRI-ENTRY WITH DROPBAR

ITEM	PART NUMBER	QTY	DESCRIPTION	REV
	1001228243	Ref	PLATFORM ASSEMBLY - 36IN X 8FT (91.5CM X 2.44M) WITH TRI-ENTRY	A
		Ref	Note: Platform and Mesh must be ordered separately for Platforms with Mesh. See SPECIAL OPTIONS SECTION for Mesh Installations.	
1	0100011	AR	Compound, Locking	
2	0641418	4	Bolt 1/4 x 2-1/4	
3	0961845	4	Bushing	
4	2080040	16	Fastener, Huck	
5	2600281	2	Hinge, Self-Closing	
6	2940074	1	Latch	
7	3300151	4	Nut 1/4	
8	3520072	3	Cap, Plug	
9	3520198	2	Cap, Plug	
10	3820020	4	Rivet	
11	4711400	8	Washer 1/4	
12	1001138494	2	Bar, Drop	
13	1001140429	2	Decal - Drop Bar	
14	1001144629	1	Gate, Weldment	
15	See Note	1	Platform (Note: Not Available - Purchase Platform Assembly)	

SECTION 5 - PLATFORM

FIGURE 5-11. PLATFORM ASSEMBLY - 36IN X 8FT (91.5CM X 2.44M) TRI-ENTRY WITH DROPGATE

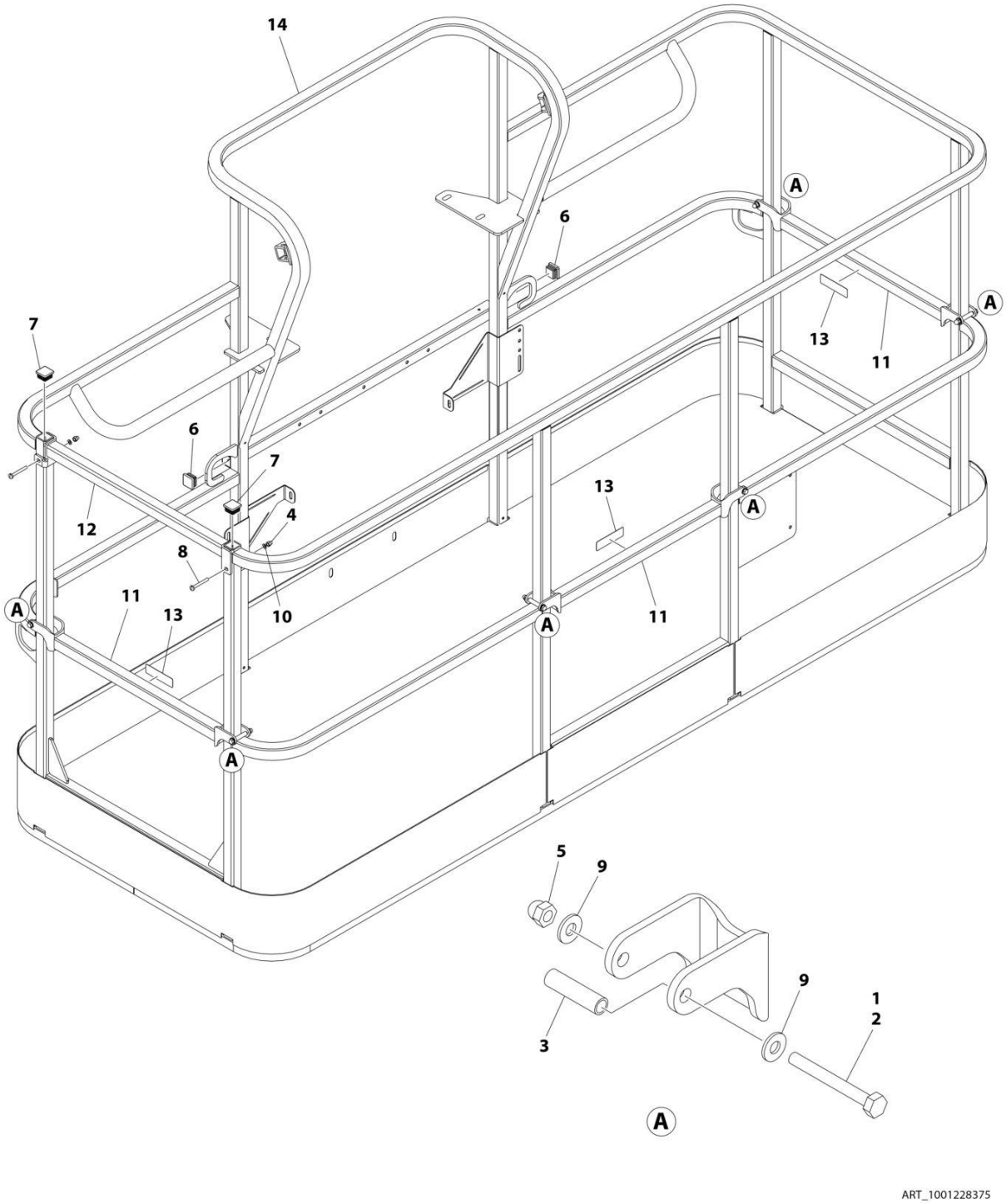

FIGURE 5-11. PLATFORM ASSEMBLY - 36IN X 8FT (91.5CM X 2.44M) TRI-ENTRY WITH DROPGATE

ITEM	PART NUMBER	QTY	DESCRIPTION	REV
	1001228375	Ref	PLATFORM ASSEMBLY - 36IN X 8FT (91.5CM X 2.44M) WITH TRI-ENTRY	A
		Ref	Note: Platform and Mesh must be ordered separately for Platforms with Mesh. See SPECIAL OPTIONS SECTION for Mesh Installations.	
		Ref	Note: Replacement Decals Must be Ordered Separately - See DECAL SECTION.	
1	0100011	AR	Compound, Locking	
2	0641418	6	Bolt 1/4 x 2-1/4	
3	0961845	6	Bushing	
4	3290606	2	Nut M6 x 1	
5	3300151	6	Nut 1/4	
6	3520072	2	Cap, Plug	
7	3520198	2	Cap, Plug	
8	4010618	2	Screw M6 x 50	
9	4711400	12	Washer 1/4	
10	4811700	2	Washer M6	
11	1001138494	3	Bar, Drop	
12	1001138514	1	Rail (Top)	
13	1001140429	3	Decal - Drop Bar	
14	See Note	1	Platform (Note: Not Available - Purchase Platform Assembly)	

FIGURE 5-12. TRAY INSTALLATION

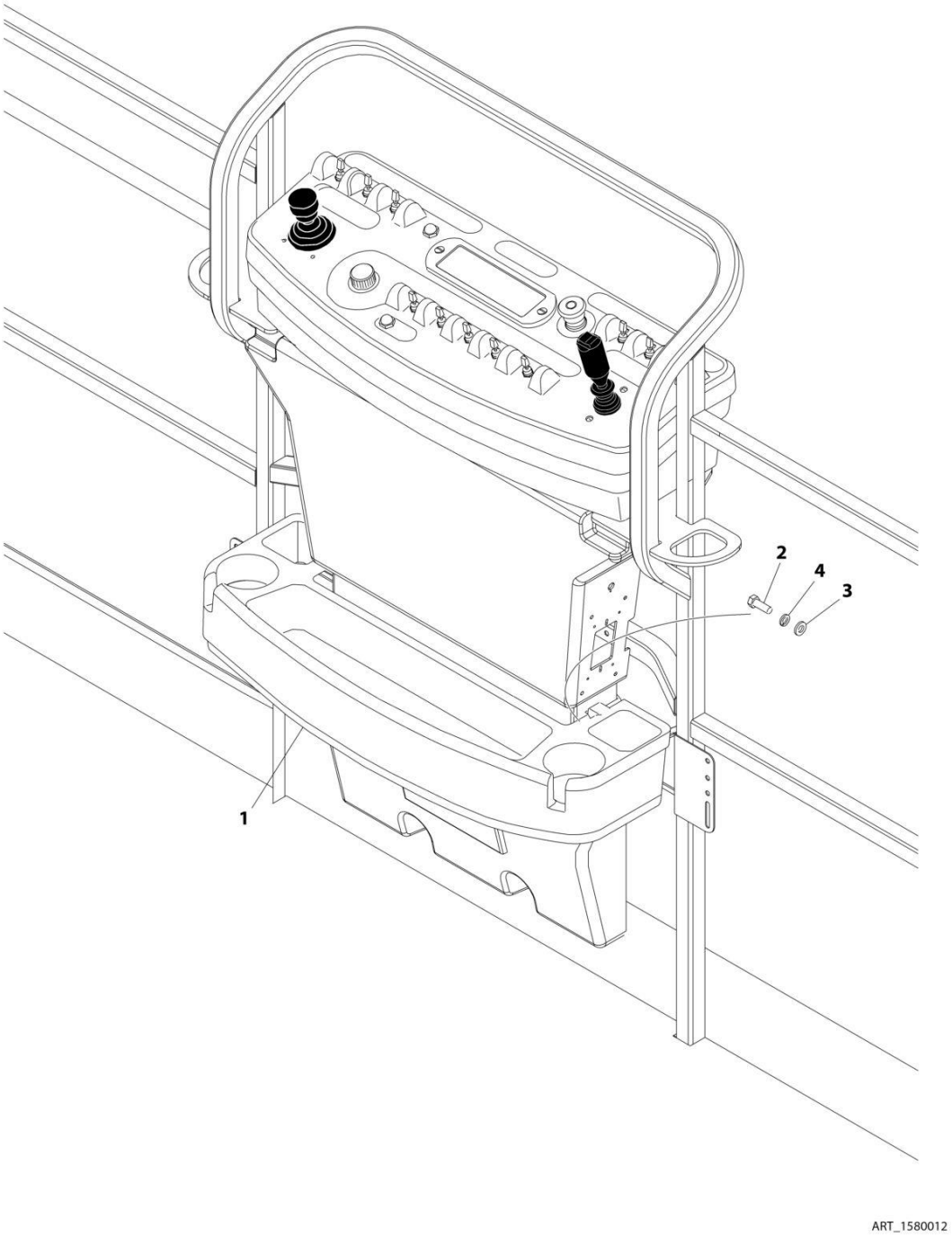

FIGURE 5-12. TRAY INSTALLATION

ITEM	PART NUMBER	QTY	DESCRIPTION	REV
	1580012	Ref	TRAY ASSEMBLY	C
1	See Note	NSS	Tray, Storage (Center) (Note: Purchase p/n 1580012)	
2	0641406	2	Bolt 1/4 x 3/4	
3	4751400	2	Washer 1/4	
4	4761400	2	Washer 1/4	

FIGURE 5-13. PLATFORM CONTROLS INSTALLATION (WITHOUT TOWER STOW)

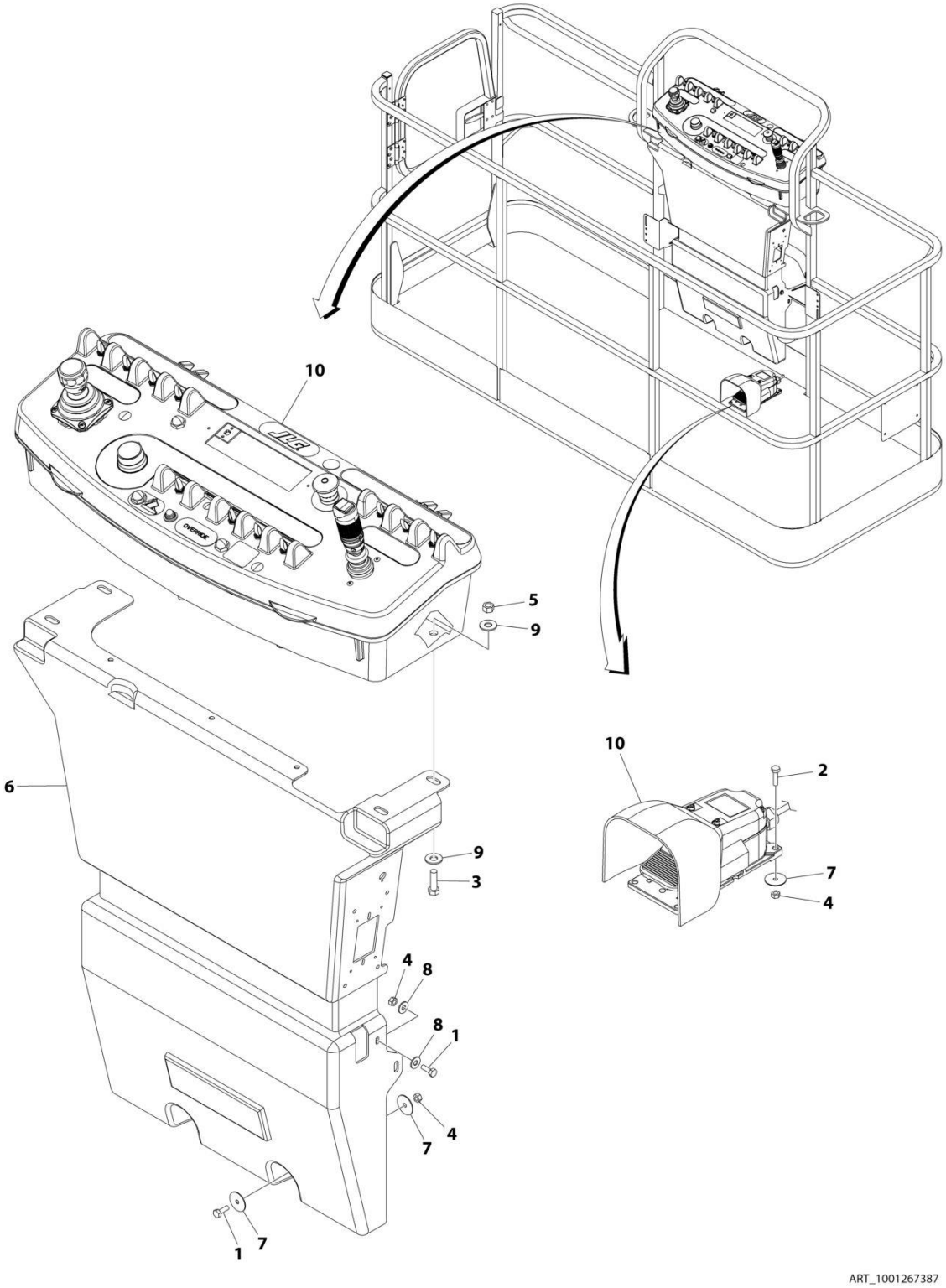

FIGURE 5-13. PLATFORM CONTROLS INSTALLATION (WITHOUT TOWER STOW)

ITEM	PART NUMBER	QTY	DESCRIPTION	REV
	1001267387	Ref	PLATFORM CONTROLS INSTALLATION	A
1	0641406	4	Bolt 1/4 x 3/4	
2	0641408	3	Bolt 1/4 x 1	
3	0641610	4	Bolt 3/8 x 1-1/4	
4	3311405	7	Nut 1/4	
5	3311605	4	Nut 3/8	
6	3380434	1	Panel, Molded	
7	4740362	7	Washer, Fender	
8	4751400	4	Washer 1/4	
9	4751600	8	Washer 3/8	
10	1001267389	1	Platform Console Box Assembly (See Separate Breakdown in this Section)	

FIGURE 5-14. PLATFORM CONTROLS INSTALLATION (WITH TOWER STOW)

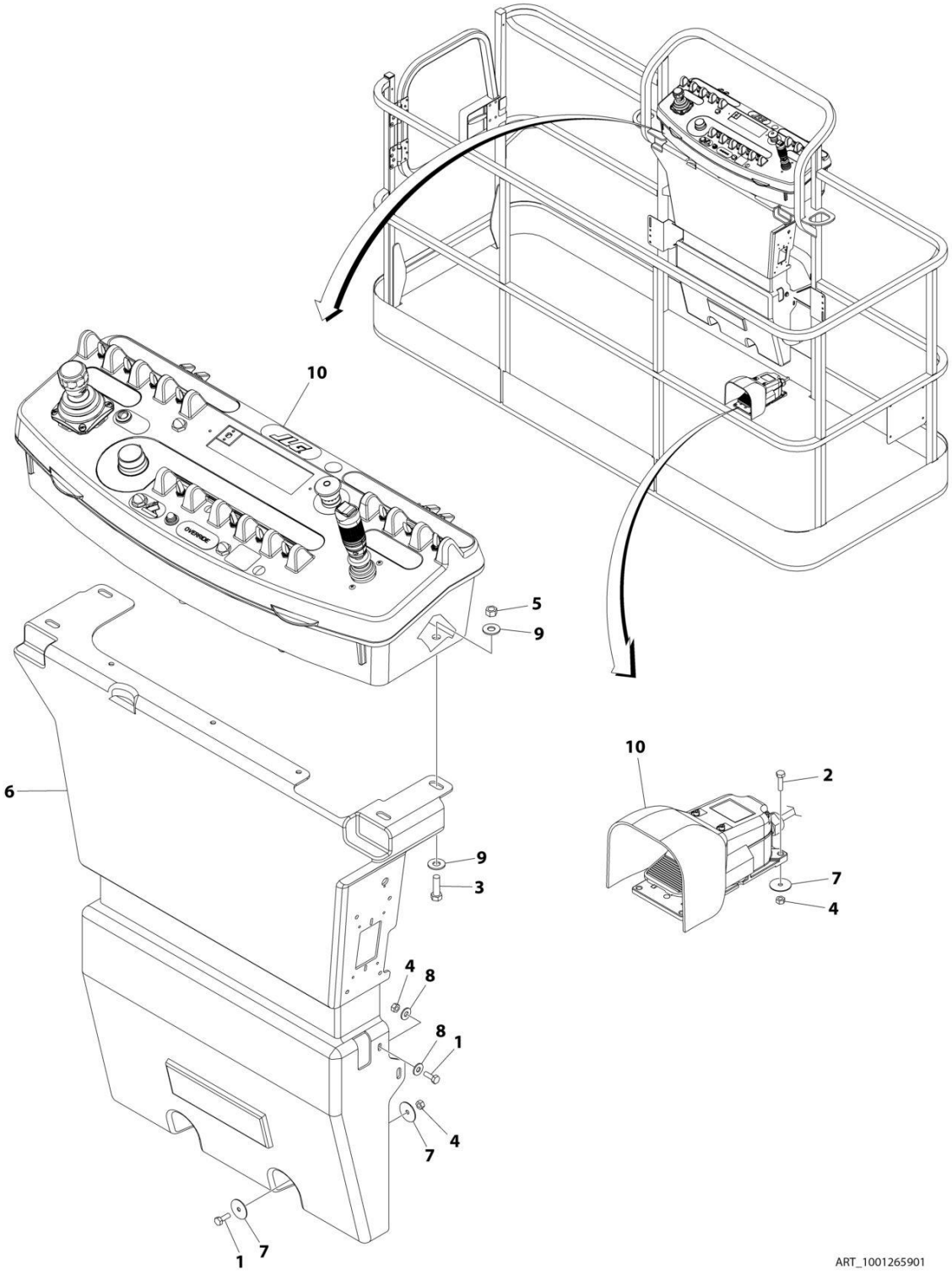

FIGURE 5-14. PLATFORM CONTROLS INSTALLATION (WITH TOWER STOW)

ITEM	PART NUMBER	QTY	DESCRIPTION	REV
	1001265901	Ref	PLATFORM CONTROLS INSTALLATION	A
1	0641406	4	Bolt 1/4 x 3/4	
2	0641408	3	Bolt 1/4 x 1	
3	0641610	4	Bolt 3/8 x 1-1/4	
4	3311405	7	Nut 1/4	
5	3311605	4	Nut 3/8	
6	3380434	1	Panel, Molded	
7	4740362	7	Washer, Fender	
8	4751400	4	Washer 1/4	
9	4751600	8	Washer 3/8	
10	1001265903	1	Platform Console Box Assembly (See Separate Breakdown in this Section)	

FIGURE 5-15. PLATFORM CONSOLE ASSEMBLY (WITHOUT TOWER STOW)

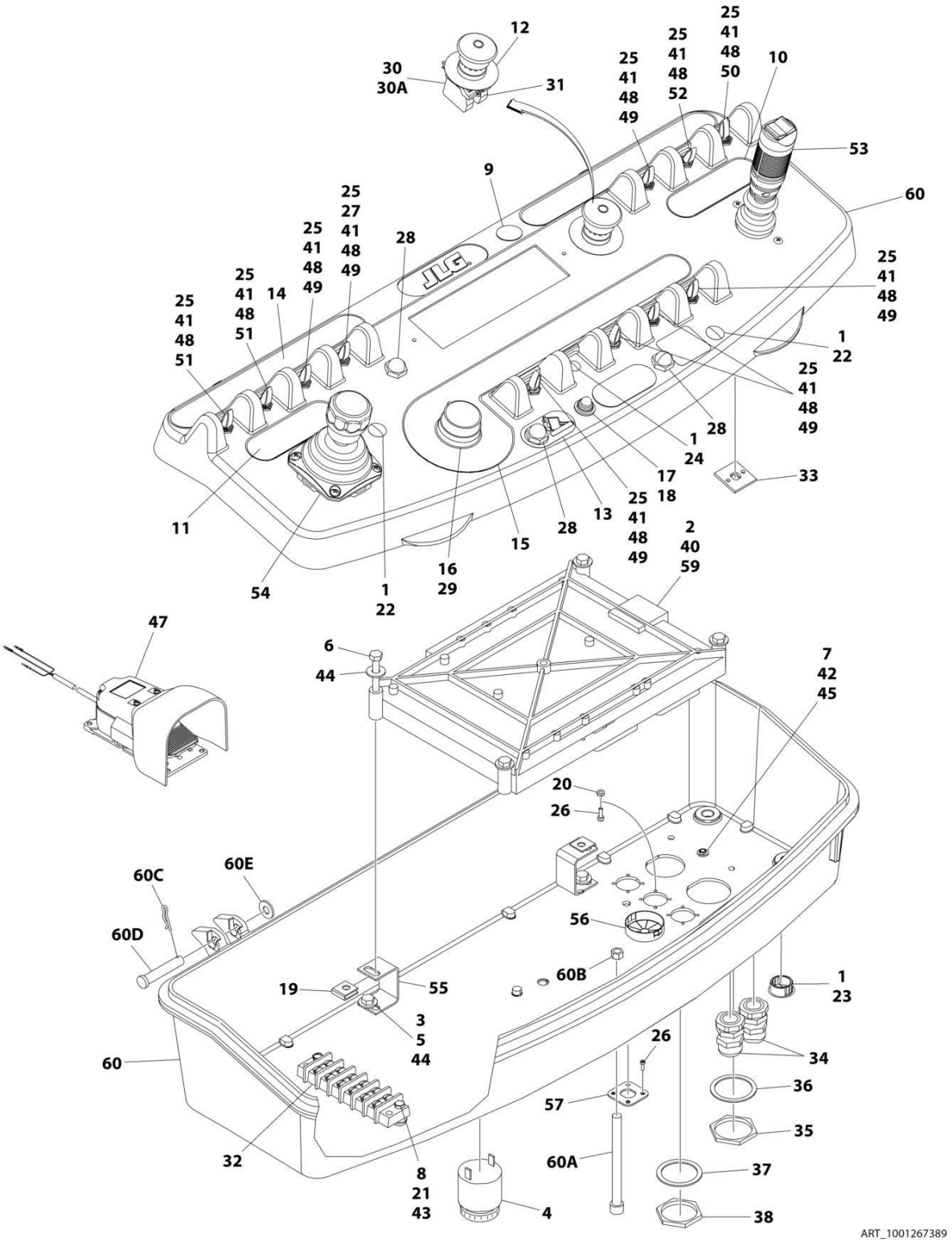

FIGURE 5-15. PLATFORM CONSOLE ASSEMBLY (WITHOUT TOWER STOW)

ITEM	PART NUMBER	QTY	DESCRIPTION	REV
	1001267389	Ref	PLATFORM CONSOLE ASSEMBLY	B
1	0100009	AR	Sealant	
2	0100035	AR	Compound, Locking	
3	0100048	AR	Grease, Dielectric	
4	0140011	1	Alarm	
5	0641404	4	Bolt 1/4 x 1/2	
6	0641414	4	Bolt 1/4 x 1-3/4	
7	0720804	1	Screw #8 x 1/2	
8	0721006	2	Bolt #10 x 3/4	
9	1671314	1	Cover, Hole	
10	1702565	1	Decal - Drive and Steer	
11	1702566	1	Decal - Lift and Swing	
12	1704260	1	Decal - EMS	
13	1705171	1	Decal - Jib Stow	
14	1705744	1	Decal - Horn	
15	1705745	1	Decal - Function Speed	
16	2560136	1	Handle, Knob	
17	2920028	1	Light, Indicator	
18	2920029	1	Bulb	
19	3300353	4	Nut, Tinnerman	
20	3300482	2	Nut M2.5	
21	3311005	2	Nut #10	
22	3520026	2	Plug, Hole	
23	3520030	1	Plug, Hole	
24	3520054	1	Plug, Hole	
25	3790012	11	O-Ring	
26	3900349	12	Capscrew M2.5	
27	4071074	1	Shim	
28	4360387	3	Switch, Pushbutton	
29	4360407	1	Controller, Speed	
29	See Note	NSS	Gasket "Top Hat" (Included with Switch) (Note: Not Available - Purchase Complete Controller)	
30	4360475	1	Switch, Emergency Stop	
30	7020175	1	Cap	
30A	7020176	1	Block, Contact	
31	4360476	1	Block, Contact	
32	4460007	1	Bar, Buss	
33	4460234	3	Tie-Strap	
34	4460428	2	Connector, Strain Relief	
35	4460470	1	Nut, Terminal	
36	4460471	1	Washer, Terminal	
37	4460496	1	Nut, Terminal	
38	4460497	1	Washer, Terminal	
39	4460708	2	Connector (Not Shown)	
40	4460905	AR	Plug, Seal (Not Shown)	
41	4740397	11	Spacer	
42	4750800	1	Washer #8	
43	4751000	2	Washer #10	
44	4751400	8	Washer 1/4	
45	4760800	1	Washer	

SECTION 5 - PLATFORM

ITEM	PART NUMBER	QTY	DESCRIPTION	REV
46	4922666	1	Harness, Analyzer Cable (Not Shown - See Separate Breakdown in ELECTRICAL Section)	
47	1001117174	1	Footswitch Assembly (See Separate Breakdown in this Section)	
48	1001155044	11	Nut 15/32-32	
49	1001155045	7	Switch, Toggle	
50	1001159256	1	Switch, Toggle	
51	1001161709	2	Switch, Toggle	
52	1001161710	1	Switch, Toggle	
53	1001166538	NLA	Controller Assembly (Drive and Steer) (Use p/n 1001212415) (See Separate Breakdown in this Section)	
54	1001166539	NLA	Controller Assembly (Lift and Swing) (Use p/n 1001129555) (See Separate Breakdown in this Section)	
55	1001172760	4	Bracket, Support	
56	1001185281	1	Plug	
57	1001220929	1	Mount, Connector	
58	1001241891	1	Harness, Console Box (Not Shown - See Separate Breakdown in ELECTRICAL Section)	
59	1600343	1	Control, Platform	
60	1001265905	1	Box, Console	B
60A	0630568	1	Screw 3/8 x 4-1/2	
60B	3311601	1	Nut 3/8	
60C	3430616	2	Clevis	
60D	3470003	2	Pin	
60E	4711600	2	Washer 3/8	

FIGURE 5-16. PLATFORM CONSOLE ASSEMBLY (WITH TOWER STOW)

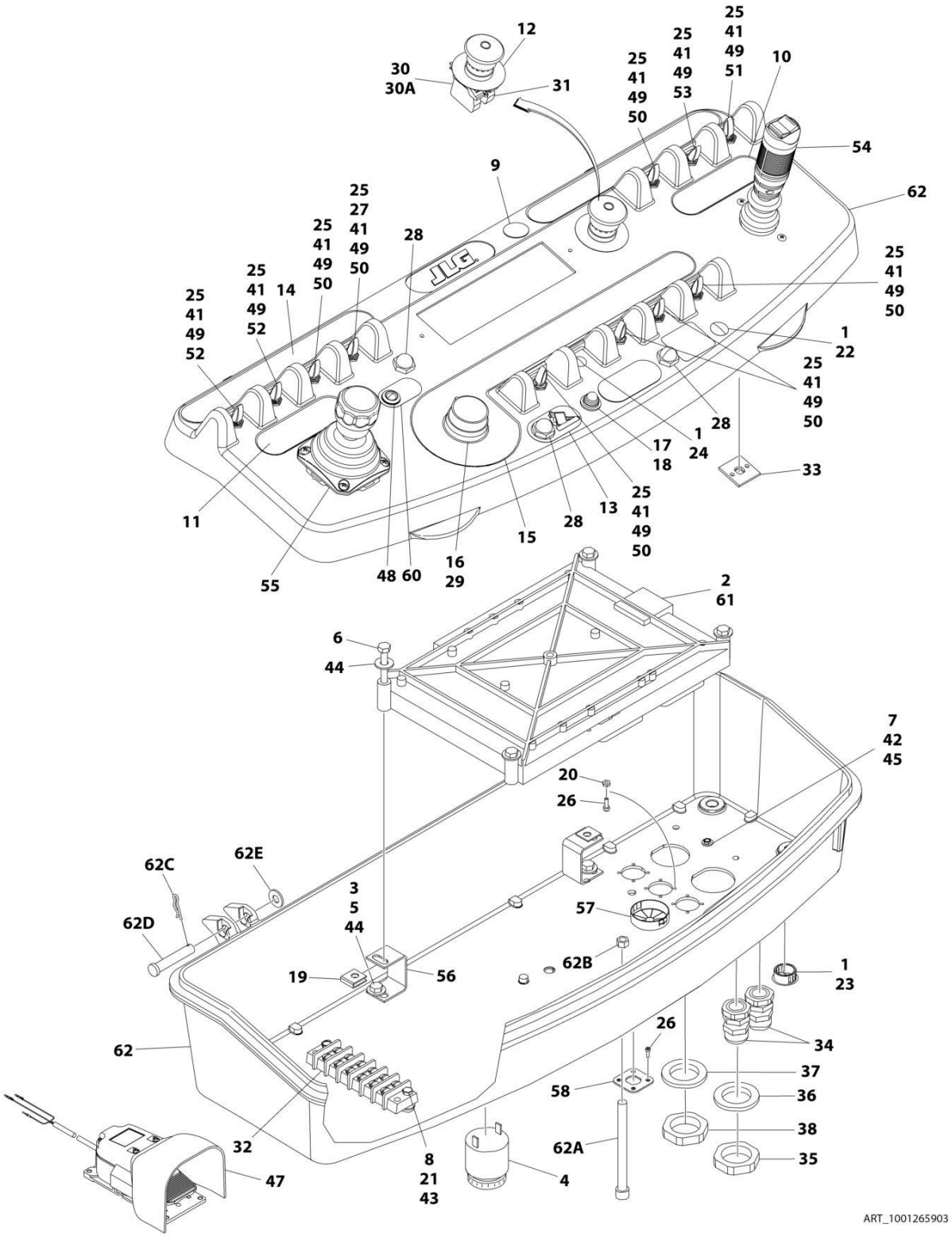

FIGURE 5-16. PLATFORM CONSOLE ASSEMBLY (WITH TOWER STOW)

ITEM	PART NUMBER	QTY	DESCRIPTION	REV
	1001265903	Ref	PLATFORM CONSOLE ASSEMBLY	B
1	0100009	AR	Sealant	
2	0100035	AR	Compound, Locking	
3	0100048	AR	Grease, Dielectric	
4	0140011	1	Alarm	
5	0641404	4	Bolt 1/4 x 1/2	
6	0641414	4	Bolt 1/4 x 1-3/4	
7	0720804	1	Screw #8 x 1/2	
8	0721006	2	Bolt #10 x 3/4	
9	1671314	1	Cover, Hole	
10	1702565	1	Decal - Drive and Steer	
11	1702566	1	Decal - Lift and Swing	
12	1704260	1	Decal - EMS	
13	1705171	1	Decal - Jib Stow	
14	1705744	1	Decal - Horn	
15	1705745	1	Decal - Function Speed	
16	2560136	1	Handle, Knob	
17	2920028	1	Light, Indicator	
18	2920029	1	Bulb	
19	3300353	4	Nut, Tinnerman	
20	3300482	2	Nut M2.5	
21	3311005	2	Nut #10	
22	3520026	1	Plug, Hole	
23	3520030	1	Plug, Hole	
24	3520054	1	Plug, Hole	
25	3790012	11	O-Ring	
26	3900349	12	Capscrew M2.5	
27	4071074	1	Shim	
28	4360387	3	Switch, Pushbutton	
29	4360407	1	Controller, Speed	
	See Note	NSS	Gasket "Top Hat" (Included with Switch) (Note: Not Available - Purchase Complete Controller)	
30	4360475	1	Switch, Emergency Stop	
30	7020175	1	Cap	
30A	7020176	1	Block, Contact	
31	4360476	1	Block, Contact	
32	4460007	1	Bar, Buss	
33	4460234	3	Tie-Strap	
34	4460428	2	Connector, Strain Relief	
35	4460470	1	Nut, Terminal	
36	4460471	1	Washer, Terminal	
37	4460496	1	Nut, Terminal	
38	4460497	1	Washer, Terminal	
39	4460708	2	Connector, Female - 15 Position (Not Shown)	
40	4460905	AR	Plug, Seal (Not Shown)	
41	4740397	11	Spacer	
42	4750800	1	Washer #8	
43	4751000	2	Washer #10	
44	4751400	8	Washer 1/4	
45	4760800	1	Washer	

SECTION 5 - PLATFORM

ITEM	PART NUMBER	QTY	DESCRIPTION	REV
46	4922666	1	Harness, Analyzer Cable (Not Shown - See Separate Breakdown in ELECTRICAL Section)	
47	1001117174	1	Footswitch Assembly (See Separate Breakdown in this Section)	
48	1001137364	1	Light, Indicator	
49	1001155044	11	Nut 15/32-32	
50	1001155045	7	Switch, Toggle	
51	1001159256	1	Switch, Toggle	
52	1001161709	2	Switch, Toggle	
53	1001161710	1	Switch, Toggle	
54	1001166538	NLA	Controller Assembly - Drive and Steer (Use p/n 1001212415) (See Separate Breakdown in this Section)	
55	1001166539	NLA	Controller Assembly - Lift and Swing (Use p/n 1001129555) (See Separate Breakdown in this Section)	
56	1001172760	4	Bracket, Support	
57	1001185281	1	Plug	
58	1001220929	1	Mount, Connector	
59	1001241891	1	Harness, Console Box (Not Shown - See Separate Breakdown in ELECTRICAL SECTION)	
60	1001260937	1	Decal	
61	1600343	1	Module, Platform Control (Note: Re-calibration Required when Replaced)	
62	1001265905	1	Box, Console	A
62A	0630568	1	Screw 3/8 x 4-1/2	
62B	3311601	1	Nut 3/8	
62C	3430616	2	Clevis	
62D	3470003	2	Pin	
62E	4711600	2	Washer 3/8	

FIGURE 5-17. LIGHT PANEL INSTALLATION

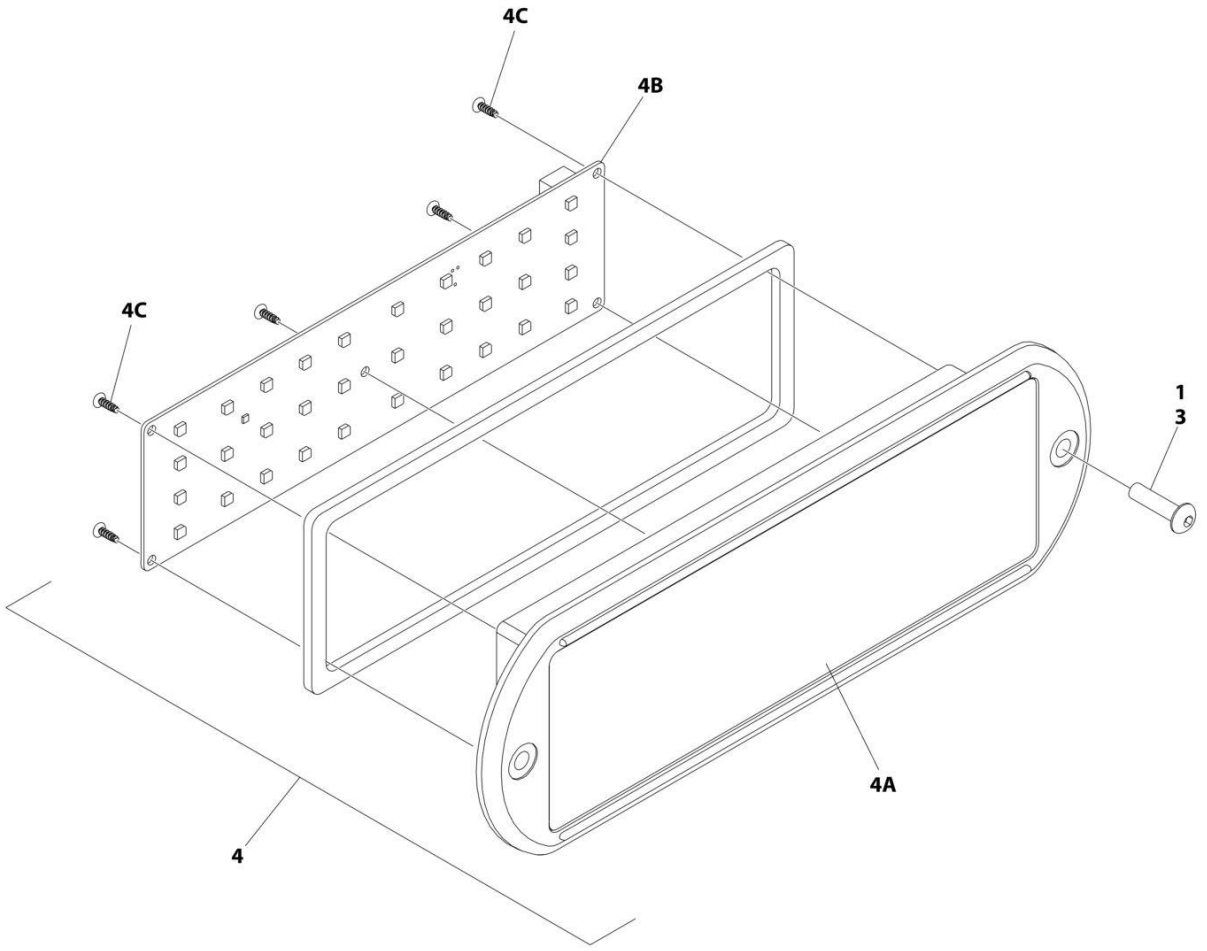

FIGURE 5-17. LIGHT PANEL INSTALLATION

ITEM	PART NUMBER	QTY	DESCRIPTION	REV
	1001233959	Ref	LIGHT PANEL INSTALLATION - PLATFORM CONSOLE	C
1	0100035	AR	Compound, Locking	
3	0630518	2	Screw #10 x 3/4	
4	1001237544	1	Light Panel Assembly	H
4A	1001236087	1	Lens, I-Con	
4B	1001187807	1	Panel, LED Light	
4C		Ref	Screw	

FIGURE 5-18. CONTROLLER ASSEMBLY (LIFT AND SWING)

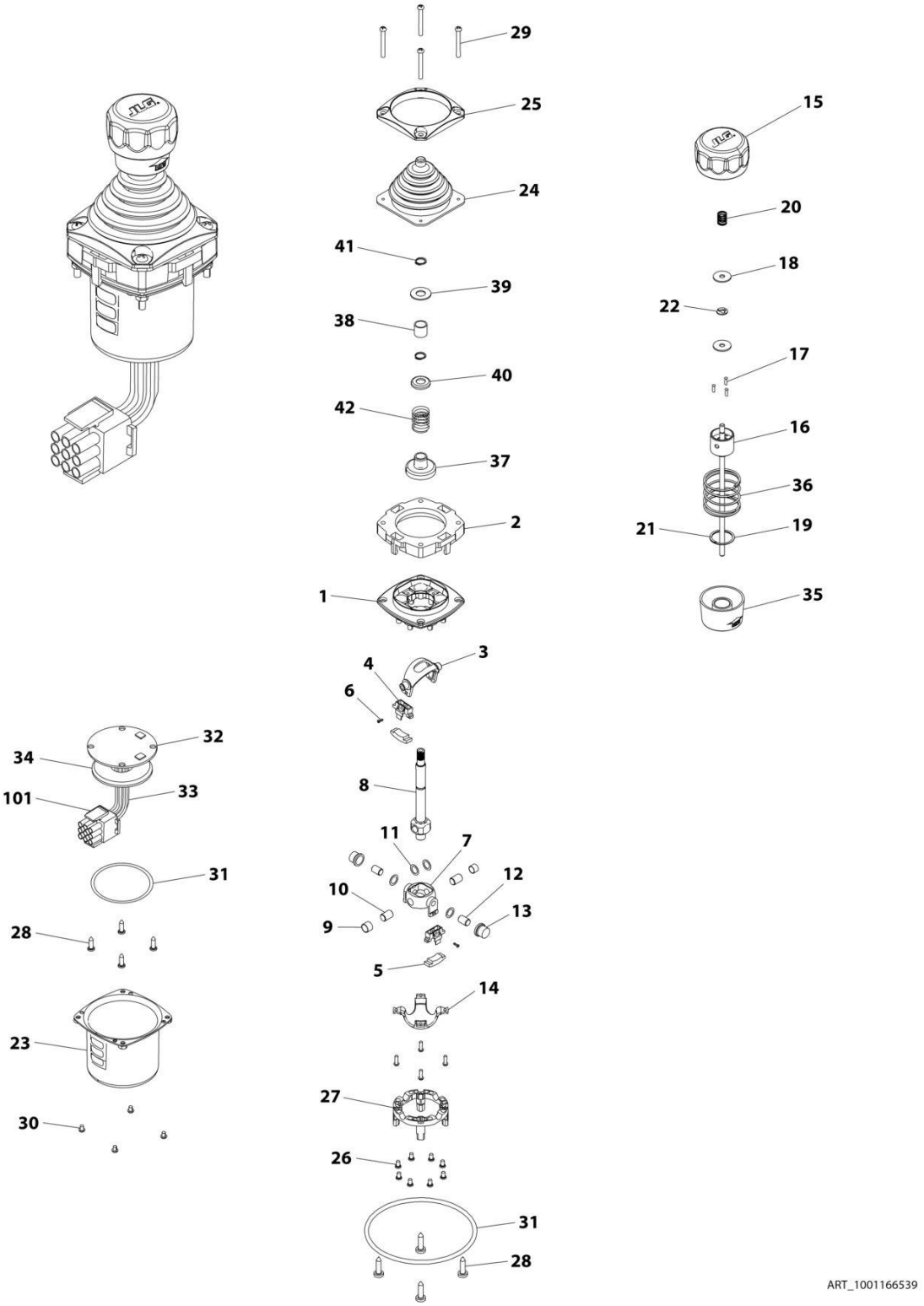

FIGURE 5-18. CONTROLLER ASSEMBLY (LIFT AND SWING)

ITEM	PART NUMBER	QTY	DESCRIPTION	REV
	1001166539	Ref	CONTROLLER ASSEMBLY	E
		Ref	Note: Original Equipment Controller May Have Been Replaced with Service Replacement Controller. Visually Identify Controller Before Ordering Parts.	
		Ref	Note: For Replacement, Use p/n 1001129555	
1	See Note	NSS	Main Cast Body (Note: Not Available - Purchase Complete Assembly)	
2	70004752	1	Adapter	
3	See Note	NSS	Pivot Arm, Plastic (Note: Not Available - Purchase Complete Assembly)	
4	See Note	NSS	Holder, Magnet (Note: Not Available - Purchase Complete Assembly)	
5	See Note	NSS	Arc, Magnet (Note: Not Available - Purchase Complete Assembly)	
6	See Note	NSS	Screw (Note: Not Available for Purchase)	
7	See Note	NSS	Pivot Arm, Cast (Note: Not Available - Purchase Complete Assembly)	
8	See Note	NSS	Shaft, Main (Note: Not Available - Purchase Complete Assembly)	
9	See Note	NSS	Bearing (Note: Not Available - Purchase Complete Assembly)	
10	See Note	NSS	Pin (Note: Not Available - Purchase Complete Assembly)	
11	See Note	NSS	Shim (Note: Not Available - Purchase Complete Assembly)	
12	See Note	NSS	Pin (Note: Not Available - Purchase Complete Assembly)	
13	See Note	NSS	Bearing (Note: Not Available - Purchase Complete Assembly)	
14	See Note	NSS	Dome, Centering (Note: Not Available - Purchase Complete Assembly)	
15	70004753	1	Cap	
16	70004754	1	Insert, Cap	
17	70004755	3	Pin	
18	70004756	2	Washer	
19	70004757	1	Pin, Centering	
20	70004758	1	Spring	
21	70004759	1	Ring, Retaining	
22	70004760	1	E-Ring	
23	70004761	1	Can, Enclosure	
24	70004762	1	Boot	
25	70004763	1	Bezel	
26	See Note	NSS	Screw (Note: Not Available for Purchase)	
27	See Note	NSS	Base Mounting (Note: Not Available - Purchase Complete Assembly)	
28	See Note	NSS	Screw (Note: Not Available for Purchase)	
29	70004764	4	Screw	
30	70004765	4	Screw	
31	70004766	1	O-Ring	
32	See Note	NSS	Plate (Note: Not Available - Purchase Complete Assembly)	
33	See Note	NSS	Harness (Note: Not Available - Purchase Complete Assembly)	
34	70004767	1	Grommet, Rubber	
35	70004768	1	Housing	
36	70004769	1	Spring	
37	70004770	1	Stopper	
38	70004771	1	Spacer	
39	70004772	1	Washer	
40	70004773	1	Disc	

SECTION 5 - PLATFORM

ITEM	PART NUMBER	QTY	DESCRIPTION	REV
41	70004774	2	Ring, Retaining	
42	70004775	1	Spring	
101	4460265	1	Connector - 9 Position	
101	4460226	6	Socket, Female	

FIGURE 5-19. CONTROLLER ASSEMBLY (DRIVE AND STEER)

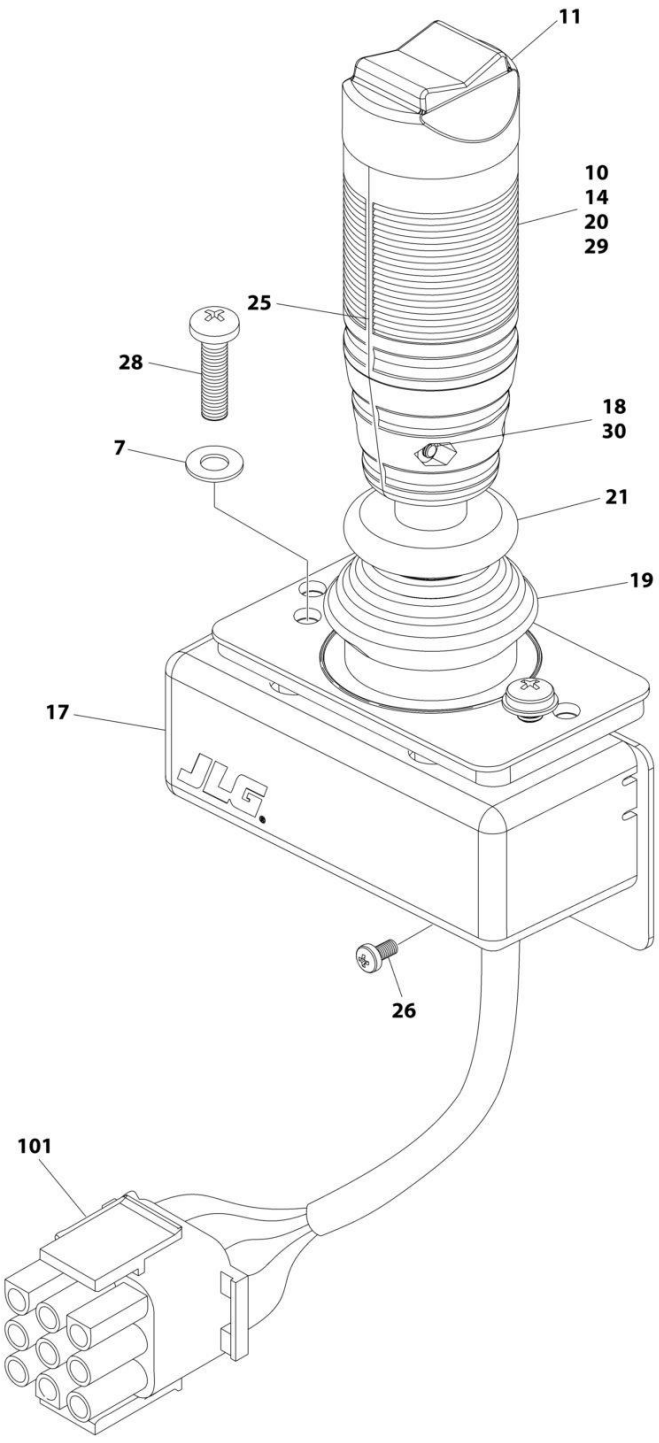

FIGURE 5-19. CONTROLLER ASSEMBLY (DRIVE AND STEER)

ITEM	PART NUMBER	QTY	DESCRIPTION	REV
	1001166538	Ref	CONTROLLER ASSEMBLY - DRIVE AND STEER	G
		Ref	Note: For Replacement, Use p/n 1001212415.	
7	70004738	2	Washer	
10	70004739	1	Roller	
11	70004740	1	Boot, Switch	
14	70004741	2	Half, Handle	
17	70004742	1	Enclosure	
18	70004743	4	Nut	
19	70004744	NLA	Boot, Controller (Use p/n 70005230 Boot/Base Assembly)	
20	70004745	NLA	Tube, Locking (Use p/n 70005230 Boot/Base Assembly)	
21	70004746	NLA	Disc, Locking (Use p/n 70005230 Boot/Base Assembly)	
25	70004747	2	Seal, Rope	
26	70004748	1	Screw M3 x 6	
28	70004749	2	Screw M5 x 20	
29	70004750	1	Pin, Dowel	
30	70004751	4	Screw M3 x 16	
101	4460265	1	Connector - 9 Position	
101	4460226	7	Socket, Female	

FIGURE 5-20. TOWER LIFT SWITCH INSTALLATION

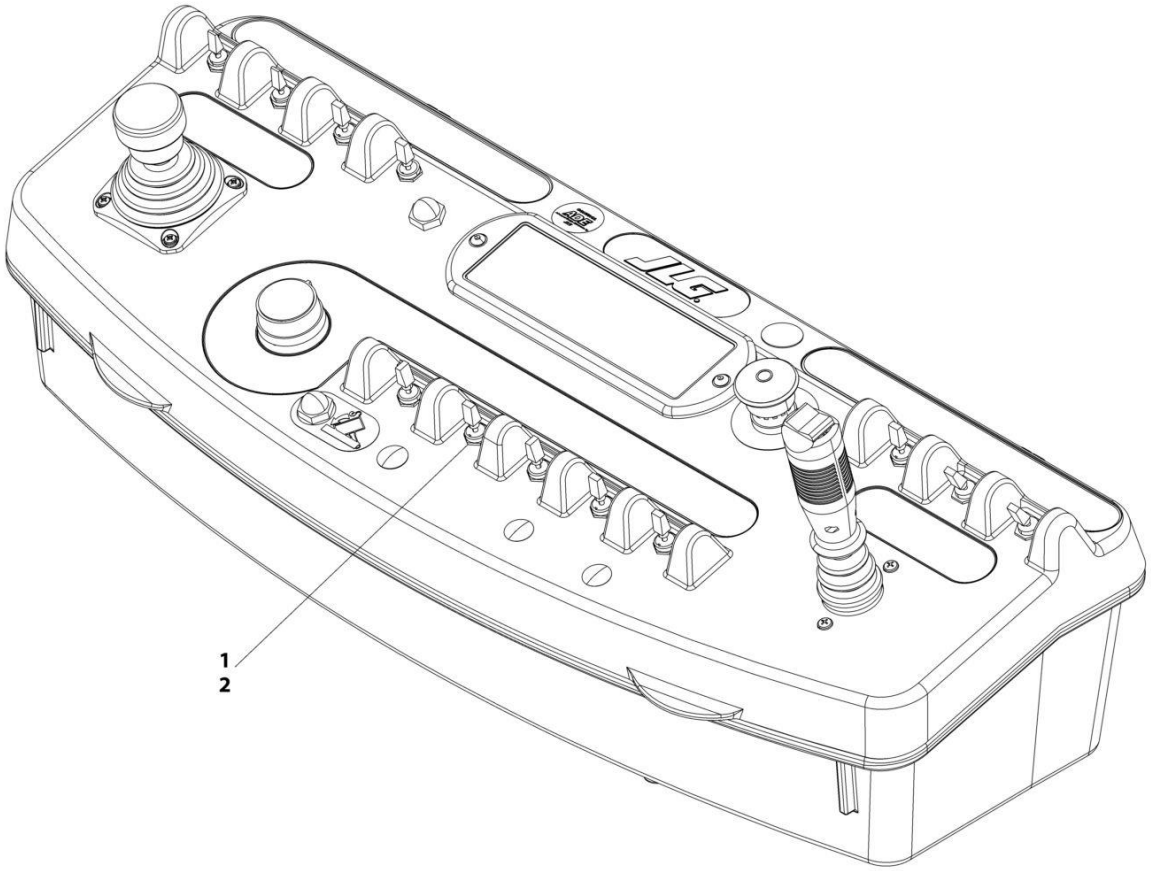

FIGURE 5-20. TOWER LIFT SWITCH INSTALLATION

ITEM	PART NUMBER	QTY	DESCRIPTION	REV
	0273446	Ref	TOWER LIFT SWITCH INSTALLATION	A
1	3790012	1	O-Ring	
2	4360328	1	Switch, Toggle	

FIGURE 5-21. FOOTSWITCH ASSEMBLY

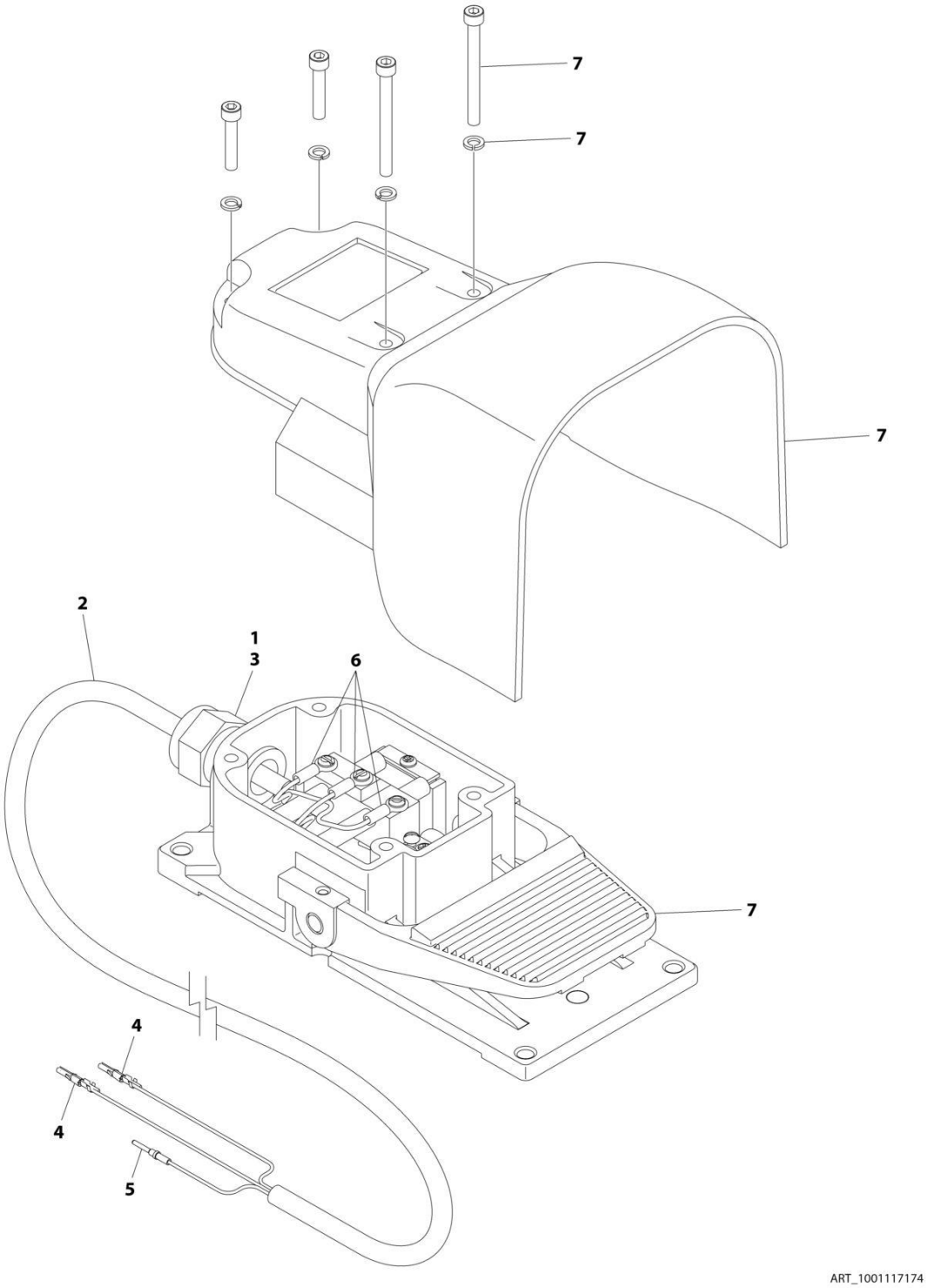

FIGURE 5-21. FOOTSWITCH ASSEMBLY

ITEM	PART NUMBER	QTY	DESCRIPTION	REV
	1001117174	Ref	FOOTSWITCH ASSEMBLY	C
1	0100020	AR	Sealant	
2	1060918	7.5 ft/ 2.3m	Cable, Electrical - 18/3	
3	4460071	1	Connector, Strain Relief	
4	4460226	2	Socket, Female	
5	4460464	1	Pin, Male	
6	1001098122	3	Terminal	
7	1001117172	1	Footswitch	
7	70002902	1	Switch, 20Amp	
7	70002903	1	Gasket	
7	70002905	1	Cover	
7	70002904	1	Kit, Replacement Bolt	

FIGURE 5-22. SKYEYE INSTALLATION

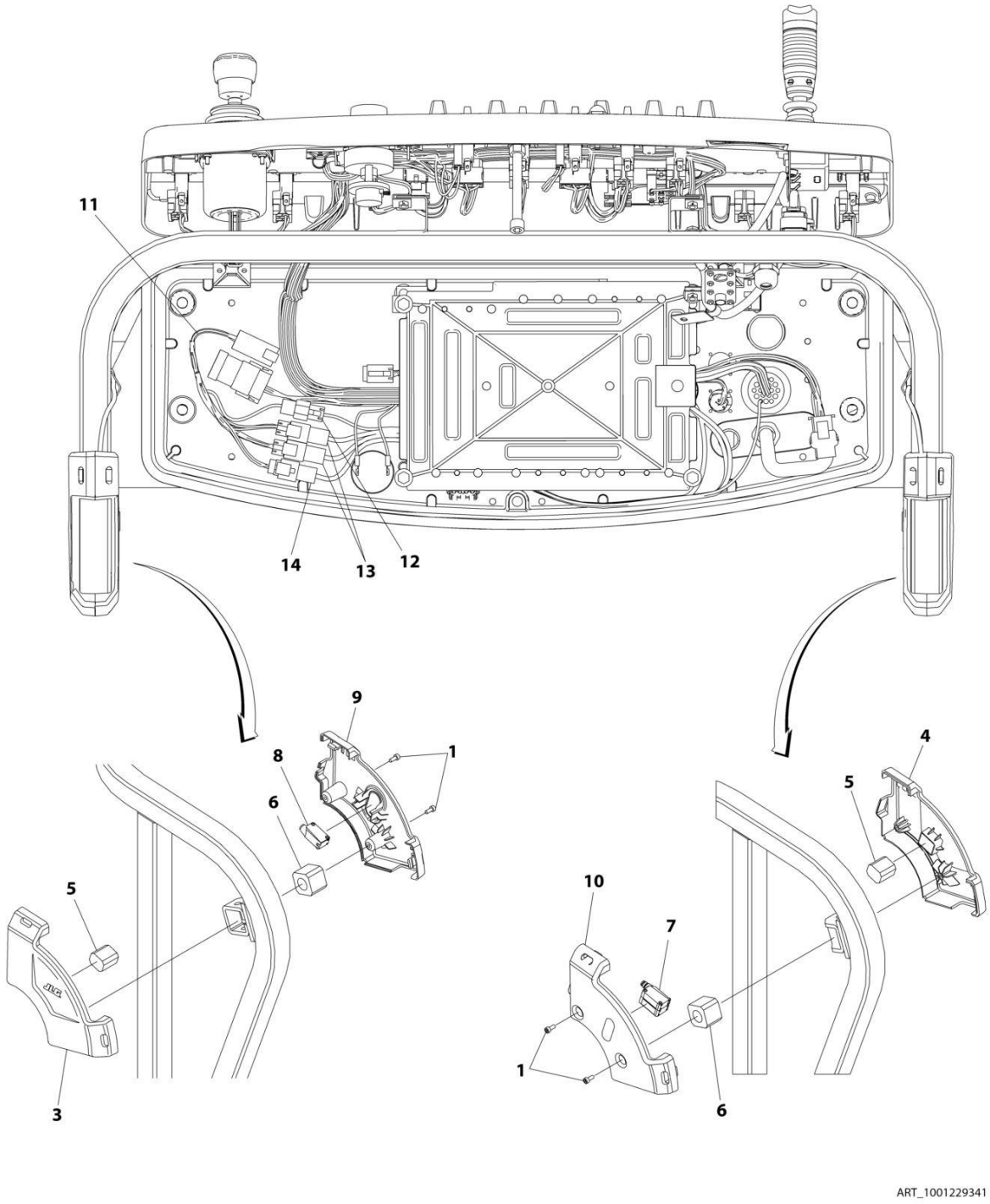

FIGURE 5-22. SKYEYE INSTALLATION

ITEM	PART NUMBER	QTY	DESCRIPTION	REV
	1001229341	Ref	SKYEYE INSTALLATION	B
1	4031505	4	Bolt M4 x 10	
2	4240033	AR	Tie-Strap (Not Shown)	
3	1001227633	1	Housing, LH Outer	
4	1001227634	1	Housing, RH Outer	
5	1001227985	2	Shim	
6	1001227987	2	Shim	
7	1001228224	2	Sensor, Receiver	
8	1001228225	1	Sensor, Emitter	
9	1001232164	1	Housing, LH Inner	
10	1001232165	1	Housing, RH Inner	
11	1001237865	1	Harness, Skyeye Intermediate (See Separate Breakdown in ELECTRICAL Section)	
12	1001238319	NLA	Harness, Skyeye Drain Jumper	
12	1001187674	1	Plug, Male - 2 Position	
12	4460942	1	Terminal	
12	4460466	1	Plug, Terminal	
12	4460508	1	Pin, Male	
13	1001237863	2	Harness, Skyeye Receiver (See Separate Breakdown in ELECTRICAL Section)	
14	1001237864	1	Harness, Skyeye Emitter (See Separate Breakdown in ELECTRICAL Section)	

FIGURE 5-23. SKYGUARD BAR INSTALLATION

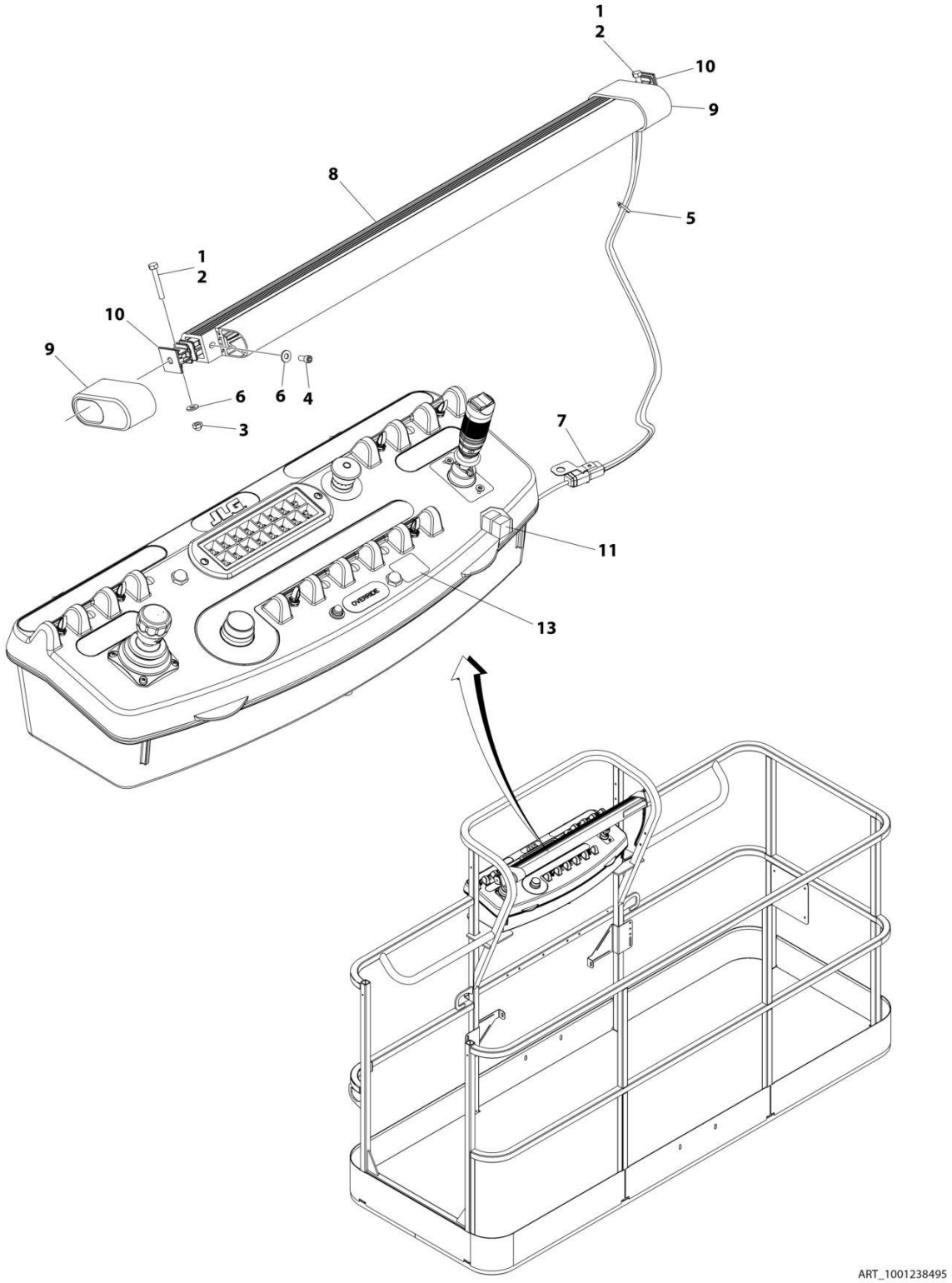

FIGURE 5-23. SKYGUARD BAR INSTALLATION

ITEM	PART NUMBER	QTY	DESCRIPTION	REV
	1001238495	Ref	SKYGUARD BAR INSTALLATION	A
1	0100011	AR	Compound, Locking	
2	0641414	2	Bolt 1/4 x 1-3/4	
3	3300430	2	Nut 1/4	
4	3931408	2	Capscrew 1/4 x 1/2	
5	4240033	8	Tie-Strap	
6	4711400	6	Washer 1/4	
7	1001120328	1	Mount	
8	1001137673	1	SkyGuard Switch Assembly	
9	1001186517	2	Cover, Platform Sensor	
10	1001209664	2	Support, Block	
11	1001186431	2	Relay	
12	1001225580	1	Interface Harness Assembly (Not Shown - Located Inside Console Box) (See Separate Breakdown in ELECTRICAL Section)	
13	1001144433	1	Decal - No Weight SkyGuard	

FIGURE 5-24. SKYLINE INSTALLATION

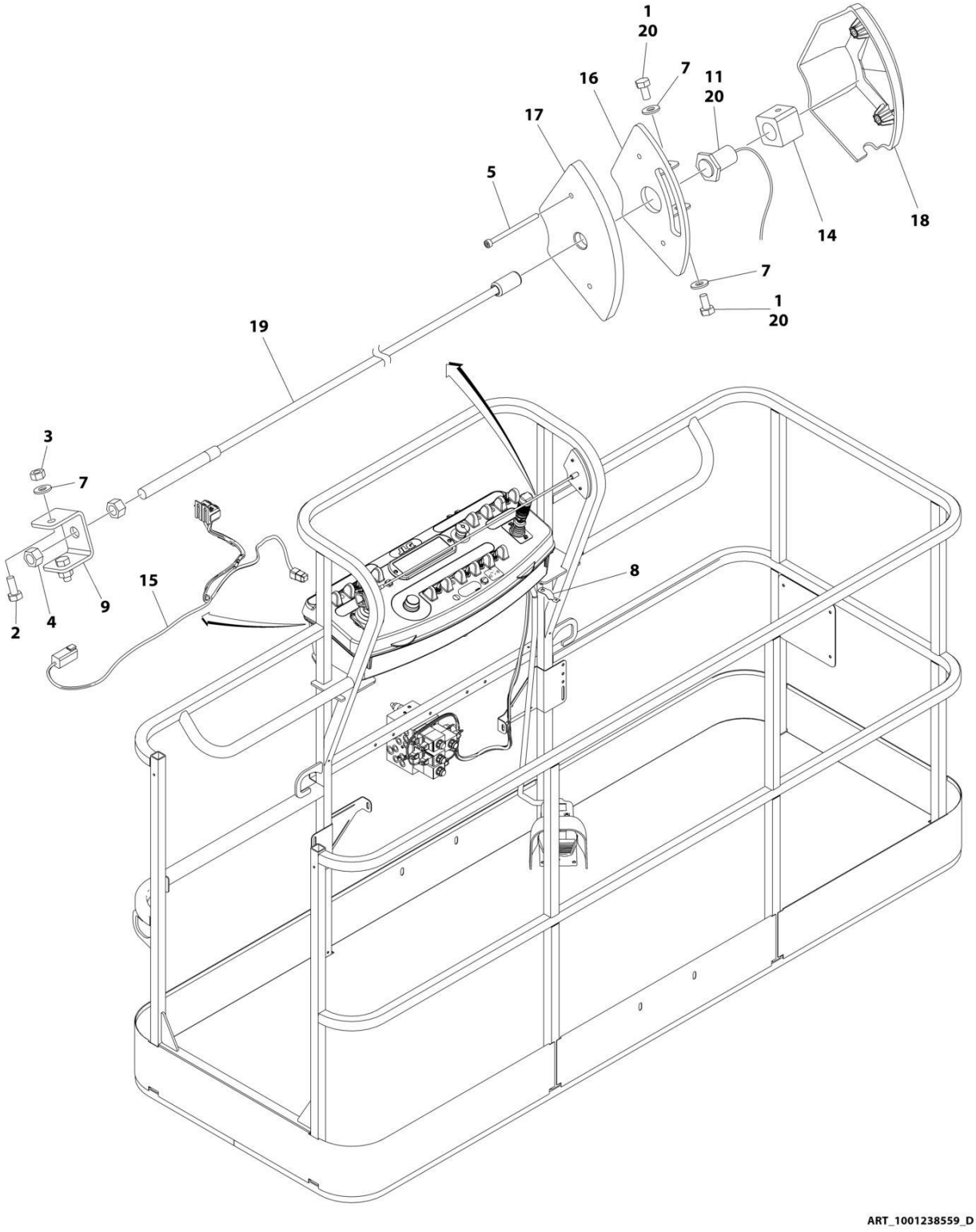

FIGURE 5-24. SKYLINE INSTALLATION

ITEM	PART NUMBER	QTY	DESCRIPTION	REV
	1001238559	Ref	SKYLINE INSTALLATION	D
1	0641404	2	Bolt 1/4 x 1/2	
2	0641405	2	Bolt 1/4 x 5/8	
3	3311405	2	Nut 1/4	
4	3311601	2	Nut 3/8	
5	4031516	2	Capscrew M4 x 60	
6	4240033	AR	Tie-Strap (Not Shown)	
7	4711400	4	Washer 1/4	
8	1001120328	1	Mount	
9	1001232642	1	Bracket	
11	1001232667	1	Sensor, Proximity	
11	1001311034	1	Sensor, Proximity	
14	1001236552	1	Block	
15	1001238418	1	Harness, Skyline (See Separate Breakdown in ELECTRICAL Section)	
16	1001238472	1	Mount	
17	1001254473	1	Housing, LH	
18	1001241965	1	Housing, RH	
19	1001254472	1	Rod	
20	0100011	AR	Compound, Locking	

FIGURE 5-25. USB CHARGER INSTALLATION

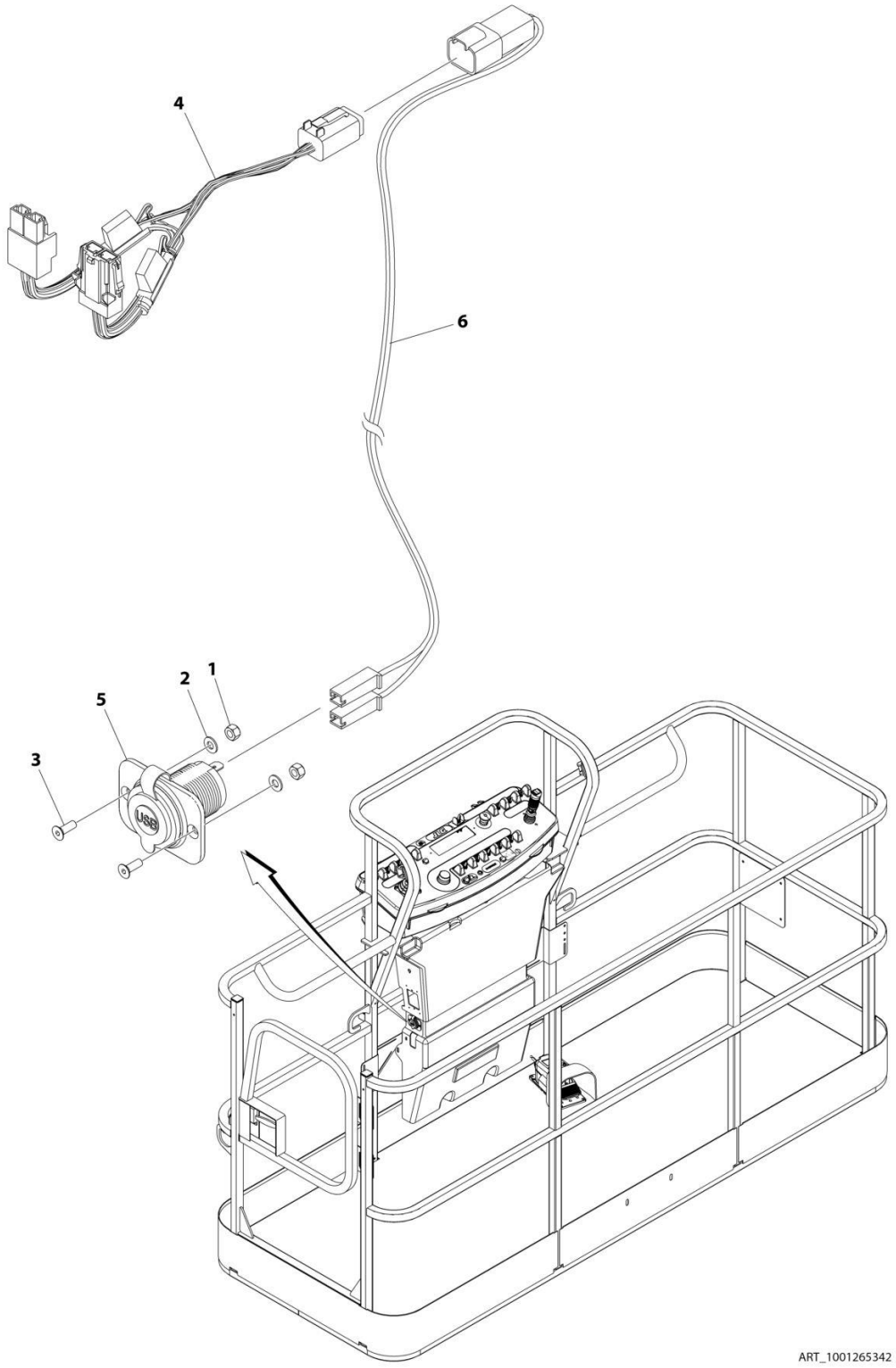

FIGURE 5-25. USB CHARGER INSTALLATION

ITEM	PART NUMBER	QTY	DESCRIPTION	REV
	1001265342	Ref	USB CHARGER INSTALLATION	A
1	3290405	2	Nut M4	
2	4811400	2	Washer M4	
3	1001097244	2	Screw M4 x 12	
4	1001120484	1	Harness, Work Lights	
4	4460879	1	Plug, Male - 2 Position	
4	4460887	2	Terminal	
4	2400060	2	Fuseholder Includes Cover	
4	8229249	2	Fuse, 3 Amp	
4	4460884	1	Connector - 4 Position	
4	4460465	4	Socket, Female	
4	1001120471	1	Connector - 2 Position	
4	1001120477	2	Terminal	
5	1001210636	1	Receptacle, USB	
6	1001265163	1	Harness, USB	A
6	4460260	2	Cover, Terminal	
6	4460259	2	Terminal	
6	4460932	1	Receptacle, Bussbar - 4 Position	
6	4460464	2	Pin, Male	
6	4460466	2	Plug, Terminal	

FIGURE 5-26. SOFT TOUCH SYSTEM INSTALLATION - 6FT/1.8M PLATFORMS (OPTIONAL)

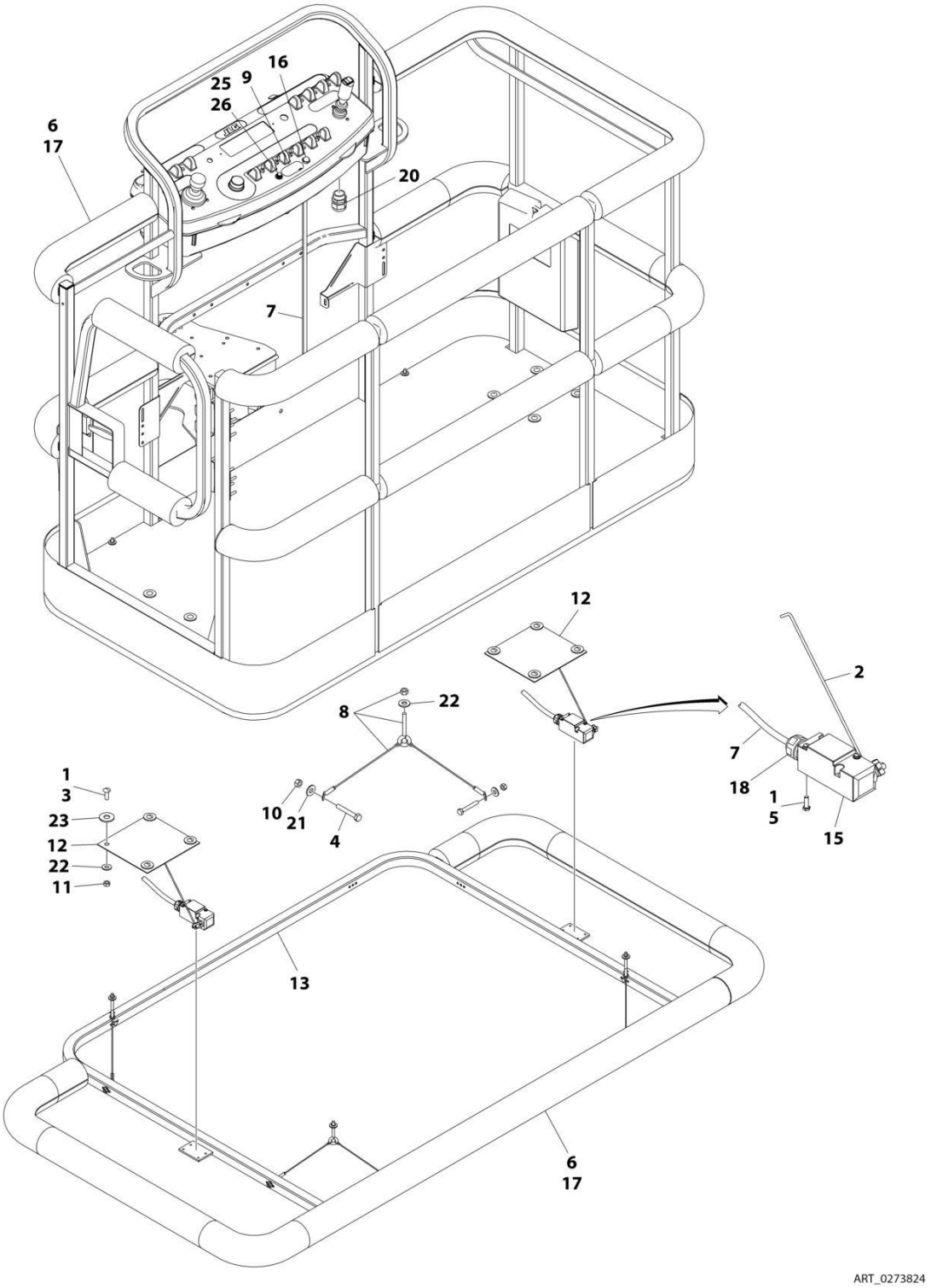

FIGURE 5-26. SOFT TOUCH SYSTEM INSTALLATION - 6FT/1.8M PLATFORMS (OPTIONAL)

ITEM	PART NUMBER	QTY	DESCRIPTION	REV
	0273824	Ref	SOFT TOUCH SYSTEM INSTALLATION	D
1	0100011	AR	Compound, Locking	
2	0200048	2	Arm, Switch	
3	0630462	8	Bolt	
4	0641414	8	Bolt 1/4 x 1-3/4	
5	0731005	4	Bolt #10 x 5/8	
6	0940134	1	Bumper Kit (Includes Corners and Enough Straight Material for One Platform)	
6	0940092	AR	Bumper (Corner)	
6	0940094	AR	Bumper (12ft Length)	
7	1060341	23 ft/7m	Cable, Soft Touch - 16/2	
8	1060903	4	Wire Rope and Eyebolt Assembly	
9	1702938	1	Decal - Soft Touch Override	
10	3311401	8	Nut 1/4	
11	3311501	8	Nut 5/16	
12	3575359	2	Plate, Switch Strike	
13	3641569	1	Rail, Soft Touch	
14	4240099	7	Tie-Strap (Not Shown)	
15	4360057	2	Switch, Limit	
16	4360387	1	Switch, Push Button	
17	4420068	AR	Tape, Adhesive	
17	1001197017	AR	Tie-Strap	
18	4460049	2	Connector, Strain Relief	
19	4460234	7	Tie-Strap (Not Shown)	
20	4460425	1	Connector, Strain Relief	
21	4751400	8	Washer 1/4	
22	4751500	12	Washer 5/16	
23	4751800	8	Washer 1/2	
24	4933218	1	Wiring Diagram (Not Shown - Reference Only)	
25	2920028	1	Light, Indicator	
26	2920029	1	Bulb, Light	

FIGURE 5-27. SOFT TOUCH SYSTEM INSTALLATION - 6FT/1.83M FALL ARREST PLATFORM

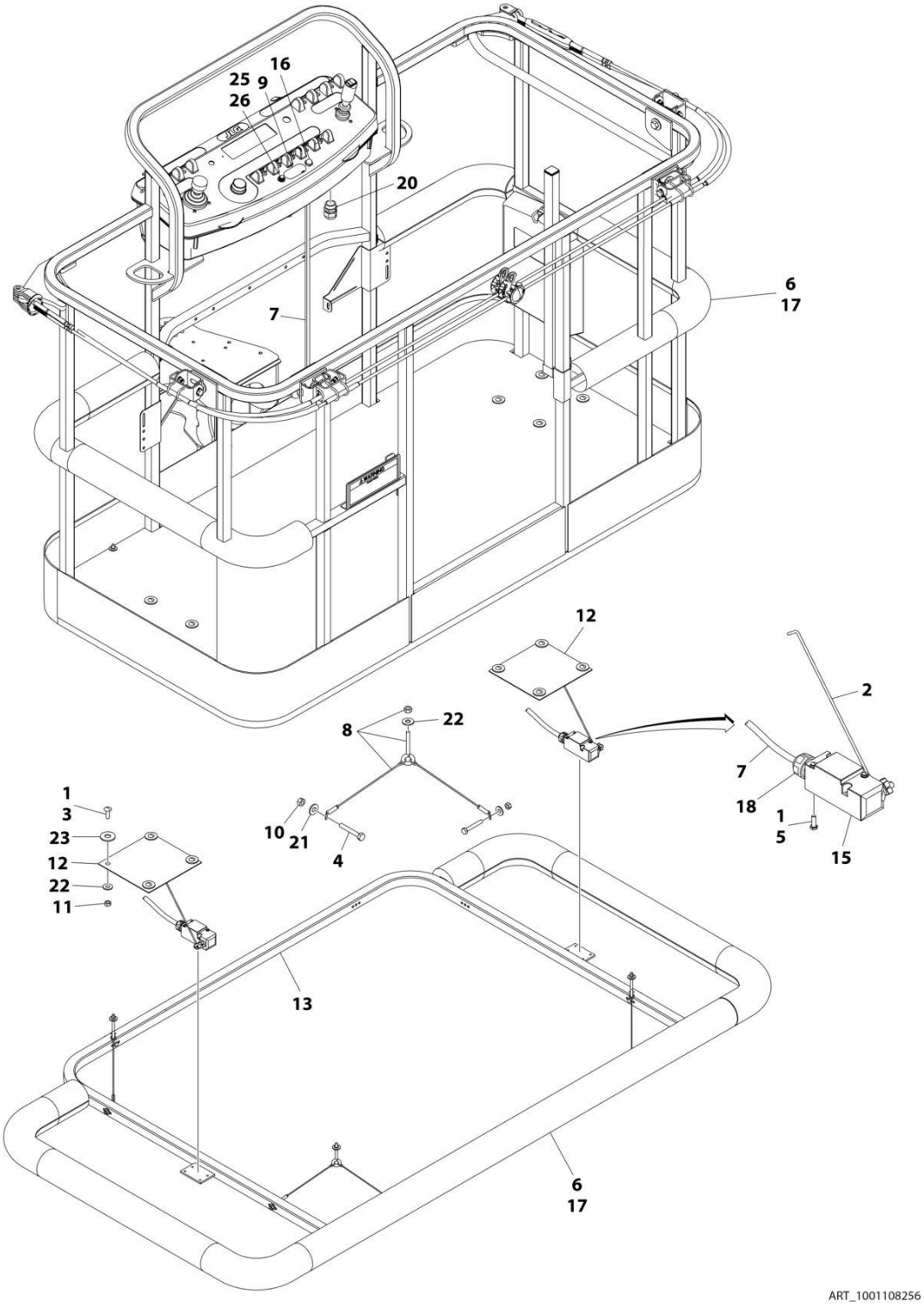

FIGURE 5-27. SOFT TOUCH SYSTEM INSTALLATION - 6FT/1.83M FALL ARREST PLATFORM

ITEM	PART NUMBER	QTY	DESCRIPTION	REV
	1001108256	Ref	SOFT TOUCH INSTALLATION	C
1	0100011	AR	Compound, Locking	
2	0200048	2	Arm, Switch	
3	0630462	8	Bolt	
4	0641414	8	Bolt 1/4 x 1-3/4	
5	0731005	4	Bolt #10 x 5/8	
6	0940177	1	Bumper Kit (Includes Corners and Enough Straight Material for One Platform)	
6	0940092	8	Bumper (Corner)	
6	0940094	AR	Bumper (12ft Length)	
7	1060341	23 ft/7m	Cable, Soft Touch - 16/2	
8	1060903	4	Wire Rope and Eyebolt Assembly	
9	1702938	1	Decal - Soft Touch Override	
10	3311401	8	Nut 1/4	
11	3311501	8	Nut 5/16	
12	3575359	2	Plate, Switch Strike	
13	3641569	1	Rail, Soft Touch	
14	4240099	7	Tie-Strap (Not Shown)	
15	4360057	2	Switch, Limit	
16	4360387	1	Switch, Push Button	
17	4420068	AR	Tape, Adhesive	
17	1001197017	AR	Tie-Strap	
18	4460049	2	Connector, Strain Relief	
19	4460234	7	Tie-Strap (Not Shown)	
20	4460425	1	Connector, Strain Relief	
21	4751400	8	Washer 1/4	
22	4751500	9	Washer 5/16	
23	4751800	8	Washer 1/2	
25	2920028	1	Light, Indicator	
26	2920029	1	Bulb, Light	

FIGURE 5-28. SOFT TOUCH SYSTEM INSTALLATION - 8FT/2.4M PLATFORMS (OPTIONAL)

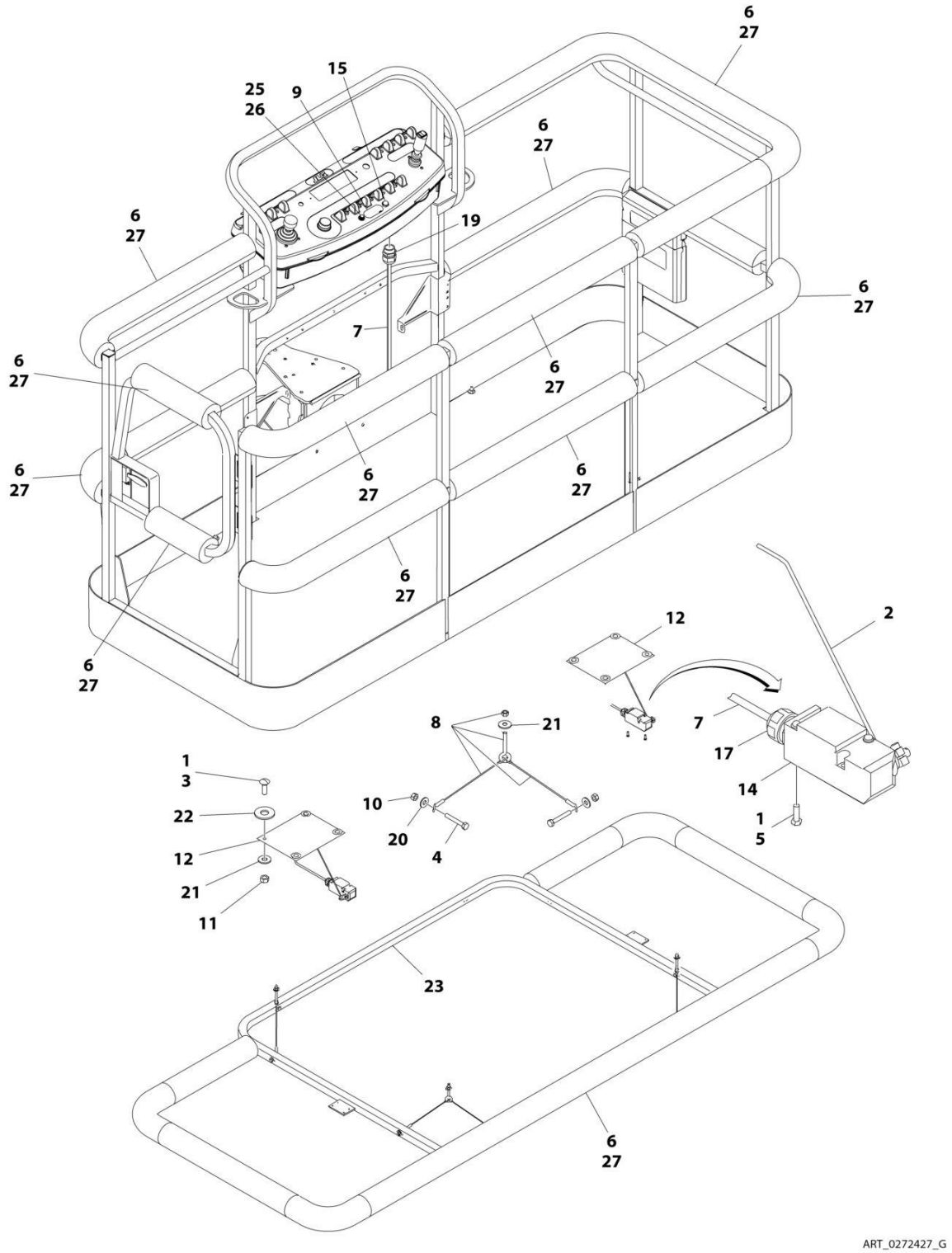

FIGURE 5-28. SOFT TOUCH SYSTEM INSTALLATION - 8FT/2.4M PLATFORMS (OPTIONAL)

ITEM	PART NUMBER	QTY	DESCRIPTION	REV
	0272427	Ref	SOFT TOUCH INSTALLATION - 36IN X 8FT (91.5CM X 2.44M) PLATFORM (OPTIONAL)	G
1	0100011	AR	Compound, Locking	
2	0200048	2	Arm, Switch	
3	0630462	8	Bolt	
4	0641414	8	Bolt 1/4 x 1-3/4	
5	0721005	4	Bolt #10 x 5/8	
6	0940103	1	Bumper Kit (Includes Corners and Enough Straight Material for One Platform)	
6	0940092	12	Bumper (Corner)	
6	0940094	AR	Bumper (12ft Length)	
7	1060341	23 ft/7m	Cable, Soft Touch - 16/2	
8	1060903	4	Wire Rope and Eyebolt Assembly	
9	1702938	1	Decal - Soft Touch Override	
10	3311401	8	Nut 1/4	
11	3311501	8	Nut 5/16	
12	3574091	2	Plate, Switch Strike	
13	4240099	7	Tie-Strap (Not Shown)	
14	4360057	2	Switch, Limit	
15	4360387	1	Switch, Push Button	
16	4420068	AR	Tape, Adhesive	
16	1001197017	AR	Tie-Strap	
17	4460049	2	Connector, Strain Relief	
18	4460234	7	Tie-Strap (Not Shown)	
19	4460425	1	Connector, Strain Relief	
20	4751400	8	Washer 1/4	
21	4751500	12	Washer 5/16	
22	4751800	8	Washer 1/2	
23	4846673	1	Rail, Soft Touch	
24	4933218	1	Soft Touch Wiring Diagram (Not Shown - Reference Only)	
25	2920028	1	Light, Indicator	
26	2920029	1	Bulb, Light	

FIGURE 5-29. SKYGLAZIER INSTALLATION (ANSI, AUSTRALIAN AND CSA SPECS)

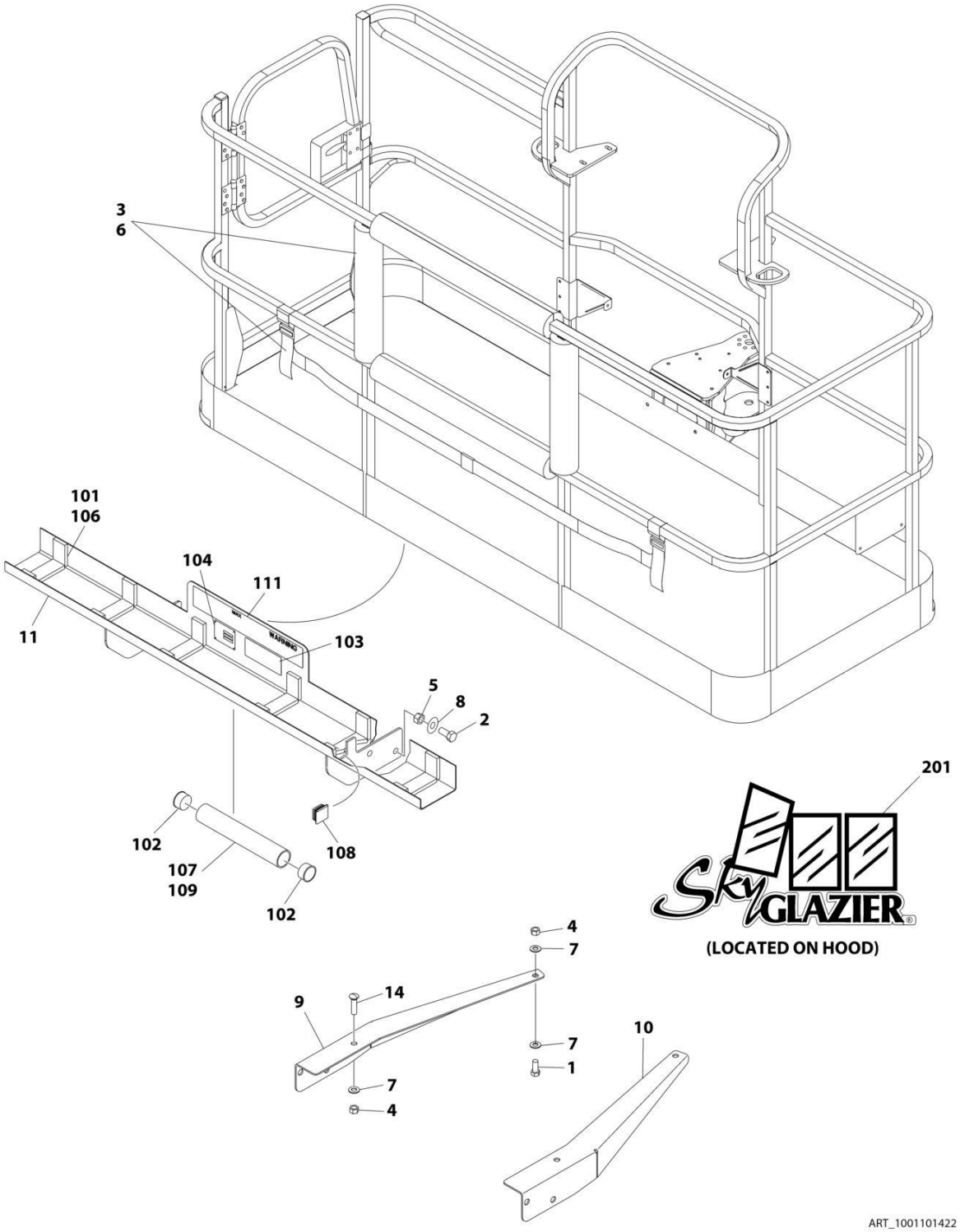

FIGURE 5-29. SKYGLAZIER INSTALLATION (ANSI, AUSTRALIAN AND CSA SPECS)

ITEM	PART NUMBER	QTY	DESCRIPTION	REV
	1001101422	Ref	SKYGLAZIER INSTALLATION	C
1	0642012	2	Bolt 5/8 x 1-1/2	
2	0642212	4	Bolt 3/4 x 1-1/2	
3	2902212	1	Bumpers and Strap Kit	
3	0940102	1	Bumper Only	
3	4240149	1	Strap Only	
4	3312005	4	Nut 5/8	
5	3312205	4	Nut 3/4	
6	4420014	AR	Tape	
7	4712000	6	Washer 5/8	
8	4712200	8	Washer 3/4	
9	1001099366	1	Support	
10	1001099367	1	Support	
11	1001101421	1	Tray Assembly (See Items 101-111 for Breakdown)	
14	8310129	2	Bolt 3/4 x 2-1/2	
	1001101421	Ref	TRAY ASSEMBLY	F
101	0100081	AR	Adhesive	
102	1120555	2	Cap, Tube	
103	1701509	1	Decal - Manual	
104	See Note	NSS	Nameplate - Serial Number (Note: Not Available for Purchase)	
106	3340956	1	Pad Kit	
107	3460334	1	Tube	
108	3520071	2	Plug	
109	4420066	AR	Tape, Double Sided	
111	1001163131	2	Decal - Glazier Capacity	
	0272418	Ref	SKYGLAZIER DECAL INSTALLATION	4
201	1705358	2	Decal - SkyGlazier	

FIGURE 5-30. SKYGLAZIER INSTALLATION (BRAZIL SPECS)

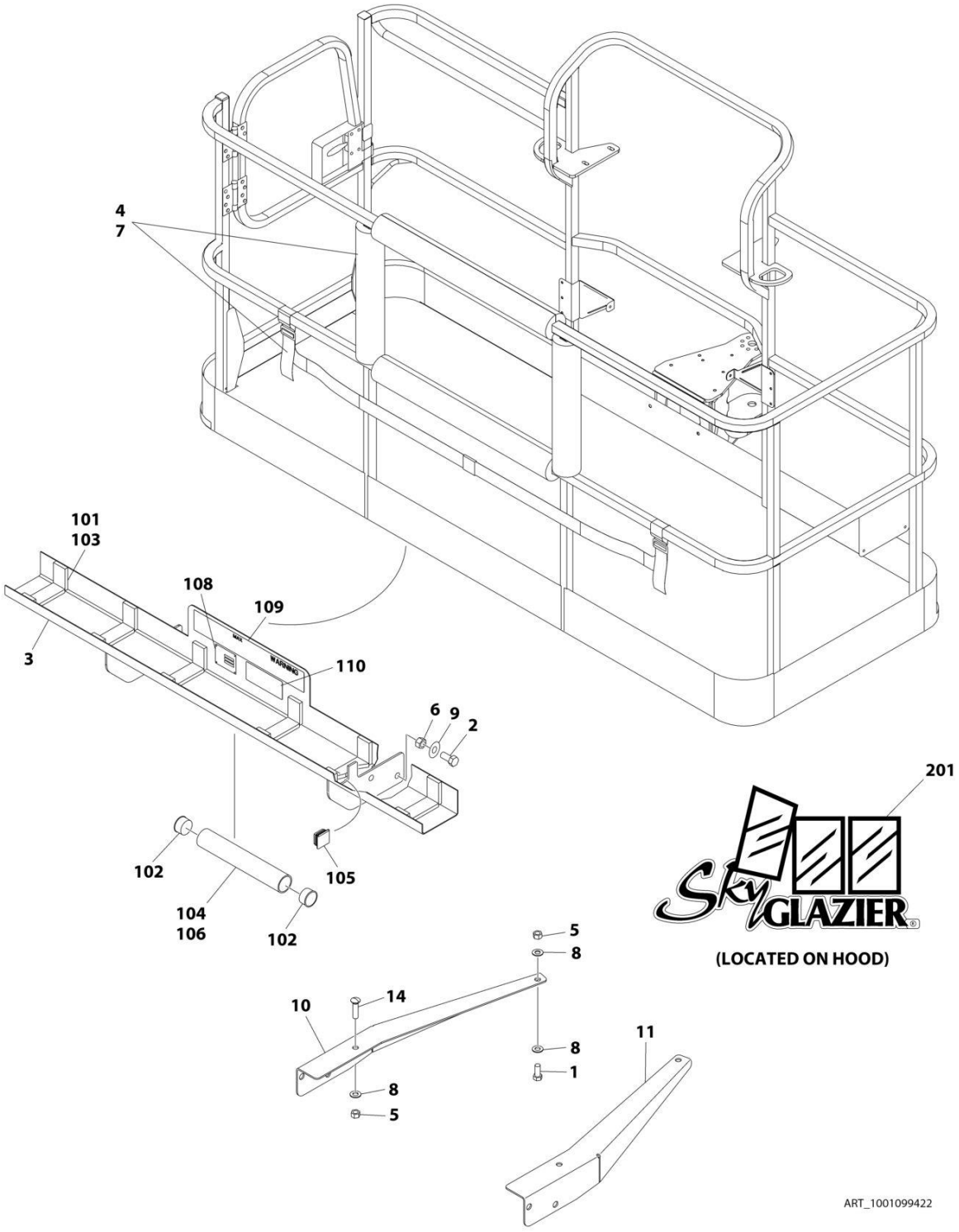

FIGURE 5-30. SKYGLAZIER INSTALLATION (BRAZIL SPECS)

ITEM	PART NUMBER	QTY	DESCRIPTION	REV
	1001099422	Ref	SKYGLAZIER INSTALLATION	C
1	0642012	2	Bolt 5/8 x 1-1/2	
2	0642212	4	Bolt 3/4 x 1-1/2	
3	0272951	1	Tray Assembly (See Items 101-110 for Breakdown)	
4	2902212	1	Bumpers and Strap Kit	
4	0940102	1	Bumper Only	
4	4240149	1	Strap Only	
5	3312005	4	Nut 5/8	
6	3312205	4	Nut 3/4	
7	4420014	AR	Tape	
8	4712000	6	Washer 5/8	
9	4712200	8	Washer 3/4	
10	1001099366	1	Support	
11	1001099367	1	Support	
14	8310129	2	Bolt 3/4 x 2-1/2	
	0272951	Ref	TRAY ASSEMBLY	F
101	0100081	AR	Adhesive	
102	1120555	2	Cap, Tube	
103	3340956	1	Pad Kit	
104	3460334	1	Tube	
105	3520071	2	Plug	
106	4420066	AR	Tape, Double Sided	
108	See Note	NSS	Nameplate - Serial Number (Note: Not Available for Purchase)	
109	1001163297	2	Decal - Glazier Capacity	
110	1701509	1	Decal - Manual	
	0272418	Ref	SKYGLAZIER DECAL INSTALLATION	4
201	1705358	2	Decal - SkyGlazier	

FIGURE 5-31. SKYGLAZIER INSTALLATION (DANISH SPECS)

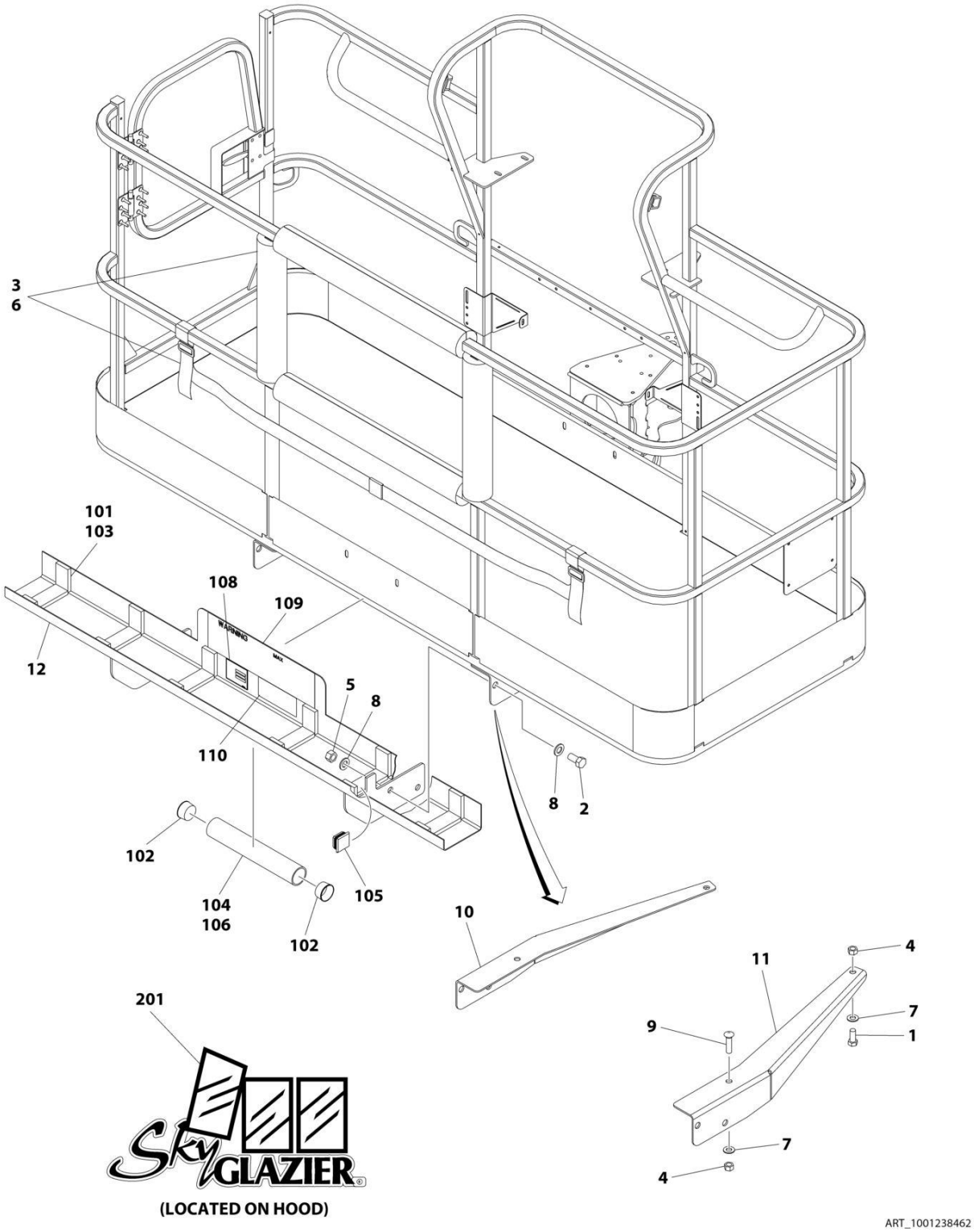

FIGURE 5-31. SKYGLAZIER INSTALLATION (DANISH SPECS)

ITEM	PART NUMBER	QTY	DESCRIPTION	REV
	1001238462	Ref	SKYGLAZIER INSTALLATION	A
1	0642012	2	Bolt 5/8 x 1-1/2	
2	0642212	4	Bolt 3/4 x 1-1/2	
3	2902212	1	Bumpers and Strap Kit	
3	0940102	1	Bumper Only	
3	4240149	1	Strap Only	
4	3312005	4	Nut 5/8	
5	3312205	4	Nut 3/4	
6	4420014	AR	Tape	
7	4712000	4	Washer 5/8	
8	4712200	8	Washer 3/4	
9	8310129	2	Bolt 5/8 x 2-1/2	
10	1001099366	1	Support	
11	1001099367	1	Support	
12	1001238423	1	Tray Assembly (See Items 101-110 for Breakdown)	
	1001238423	Ref	TRAY ASSEMBLY	B
101	0100081	AR	Adhesive	
102	1120555	2	Cap, Tube	
103	3340956	1	Pad Kit	
104	3460334	1	Tube	
105	3520071	2	Plug	
106	4420066	AR	Tape, Double Sided	
108	See Note	NSS	Nameplate - Serial Number (Note: Not Available for Purchase)	
109	1001237705	2	Decal - Glazier Capacity	
110	1701509	1	Decal - Manual	
	0272418	Ref	SKYGLAZIER DECAL INSTALLATION	4
201	1705358	2	Decal - SkyGlazier	

FIGURE 5-32. SKYGLAZIER INSTALLATION (FRENCH SPECS)

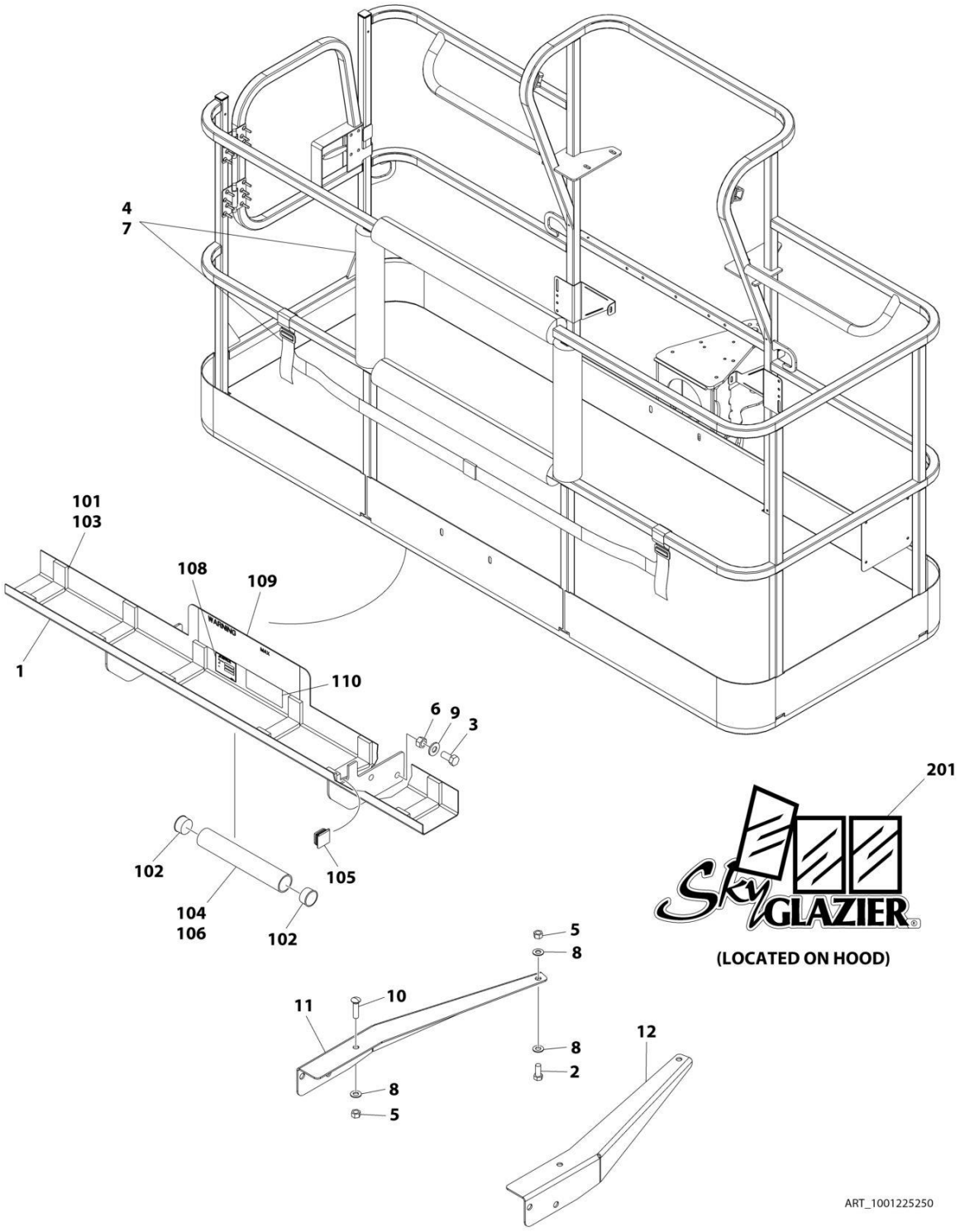

FIGURE 5-32. SKYGLAZIER INSTALLATION (FRENCH SPECS)

ITEM	PART NUMBER	QTY	DESCRIPTION	REV
	1001225250	Ref	SKYGLAZIER INSTALLATION	A
1	0272949	1	Tray Assembly (See Items 101-110 for Breakdown)	
2	0642012	2	Bolt 5/8 x 1-1/2	
3	0642212	4	Bolt 3/4 x 1-1/2	
4	2902212	1	Bumpers and Strap Kit	
4	0940102	1	Bumper Only	
4	4240149	1	Strap Only	
5	3312005	4	Nut 5/8	
6	3312205	4	Nut 3/4	
7	4420014	AR	Tape	
8	4712000	6	Washer 5/8	
9	4712200	8	Washer 3/4	
10	8310129	2	Bolt 5/8 x 2-1/2	
11	1001099366	1	Support	
12	1001099367	1	Support	
	0272949	Ref	TRAY ASSEMBLY	E
101	0100081	AR	Adhesive	
102	1120555	2	Cap, Tube	
103	3340956	1	Pad Kit	
104	3460334	1	Tube	
105	3520071	2	Plug	
106	4420066	AR	Tape, Double Sided	
108	See Note	NSS	Nameplate - Serial Number (Note: Not Available for Purchase)	
109	1001163293	2	Decal - Glazier Capacity	
110	1701509	1	Decal - Manual	
	0272418	Ref	SKYGLAZIER DECAL INSTALLATION	4
201	1705358	2	Decal - SkyGlazier	

FIGURE 5-33. SKYGLAZIER INSTALLATION (GERMAN SPECS)

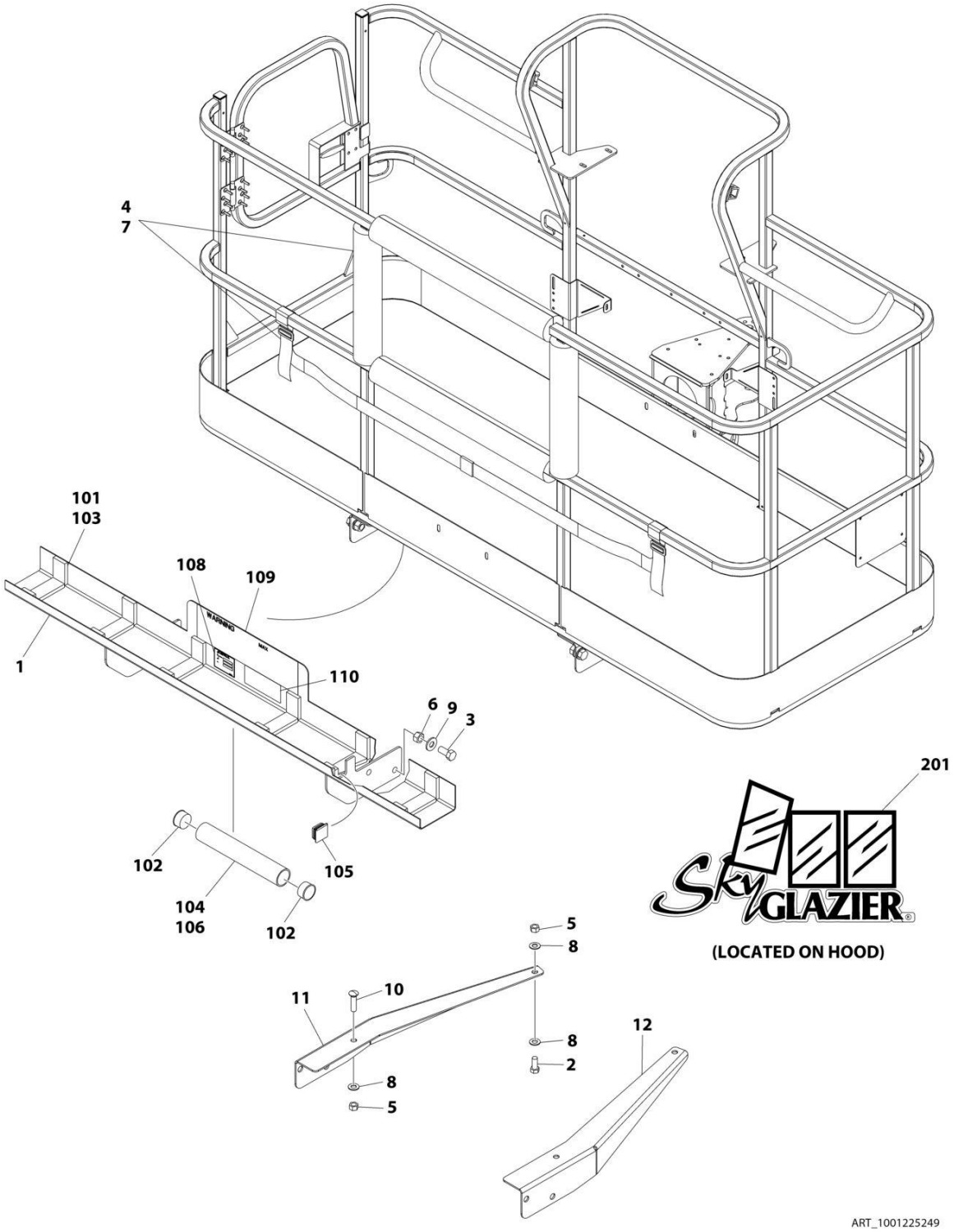

FIGURE 5-33. SKYGLAZIER INSTALLATION (GERMAN SPECS)

ITEM	PART NUMBER	QTY	DESCRIPTION	REV
	1001225249	Ref	SKYGLAZIER INSTALLATION	A
1	0272950	1	Tray Assembly (See Items 101-110 for Breakdown)	
2	0642012	2	Bolt 5/8 x 1-1/2	
3	0642212	4	Bolt 3/4 x 1-1/2	
4	2902212	1	Bumpers and Strap Kit	
4	0940102	1	Bumper Only	
4	4240149	1	Strap Only	
5	3312005	4	Nut 5/8	
6	3312205	4	Nut 3/4	
7	4420014	AR	Tape	
8	4712000	6	Washer 5/8	
9	4712200	8	Washer 3/4	
10	8310129	2	Bolt 5/8 x 2-1/2	
11	1001099366	1	Support	
12	1001099367	1	Support	
	0272950	Ref	TRAY ASSEMBLY	E
101	0100081	AR	Adhesive	
102	1120555	2	Cap, Tube	
103	3340956	1	Pad Kit	
104	3460334	1	Tube	
105	3520071	2	Plug	
106	4420066	AR	Tape, Double Sided	
108	See Note	NSS	Nameplate - Serial Number (Note: Not Available for Purchase)	
109	1001163298	2	Decal - Glazier Capacity	
110	1701509	1	Decal - Manual	
	0272418	Ref	SKYGLAZIER DECAL INSTALLATION	4
201	1705358	2	Decal - SkyGlazier	

FIGURE 5-34. SKYGLAZIER INSTALLATION (ITALIAN SPECS)

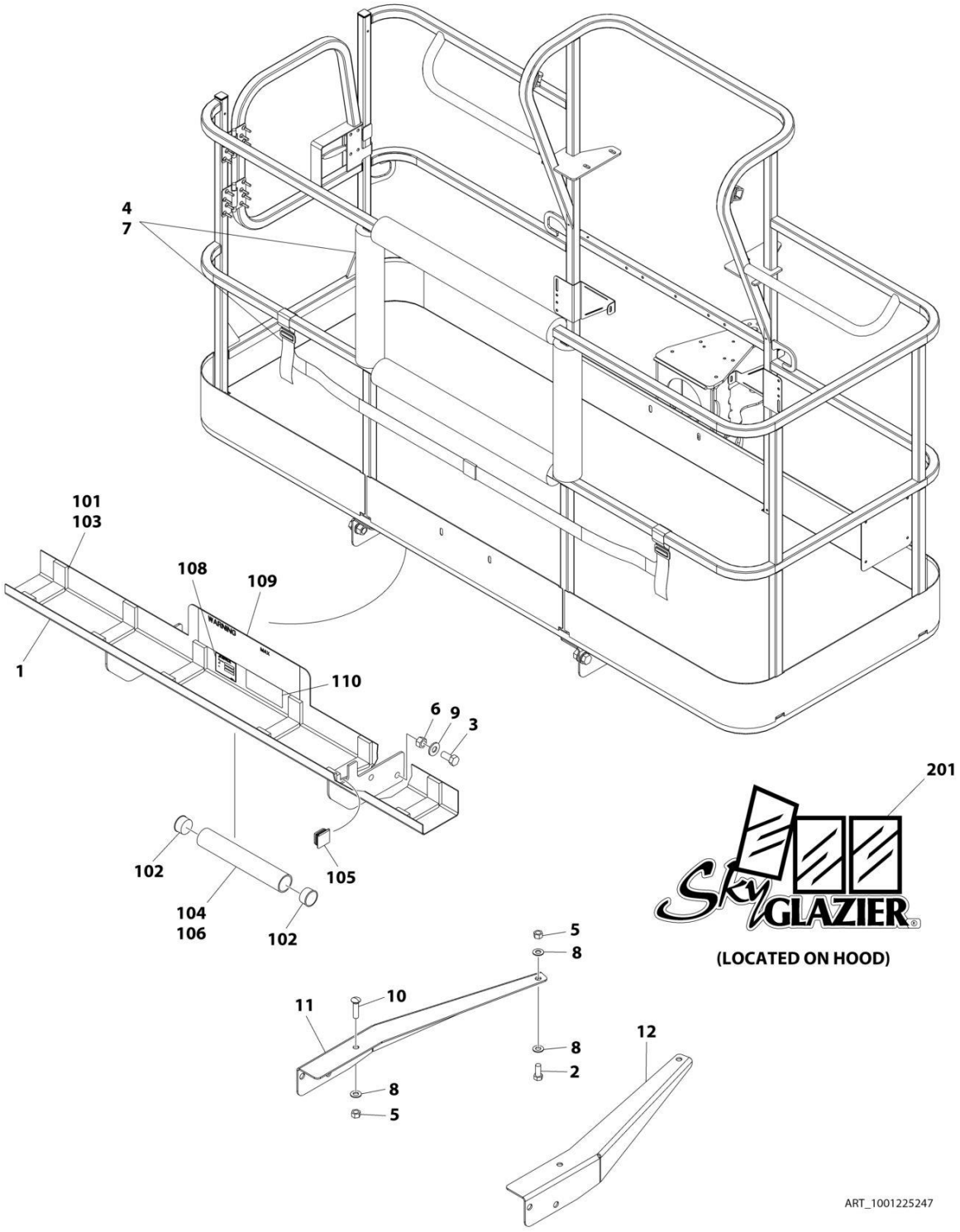

FIGURE 5-34. SKYGLAZIER INSTALLATION (ITALIAN SPECS)

ITEM	PART NUMBER	QTY	DESCRIPTION	REV
	1001225247	Ref	SKYGLAZIER INSTALLATION	A
1	0272952	1	Tray Assembly (See Items 101-110 for Breakdown)	
2	0642012	2	Bolt 5/8 x 1-1/2	
3	0642212	4	Bolt 3/4 x 1-1/2	
4	2902212	1	Bumpers and Strap Kit	
4	0940102	1	Bumper Only	
4	4240149	1	Strap Only	
5	3312005	4	Nut 5/8	
6	3312205	4	Nut 3/4	
7	4420014	AR	Tape	
8	4712000	6	Washer 5/8	
9	4712200	8	Washer 3/4	
10	8310129	2	Bolt 5/8 x 2-1/2	
11	1001099366	1	Support	
12	1001099367	1	Support	
	0272952	Ref	TRAY ASSEMBLY	E
101	0100081	AR	Adhesive	
102	1120555	2	Cap, Tube	
103	3340956	1	Pad Kit	
104	3460334	1	Tube	
105	3520071	2	Plug	
106	4420066	AR	Tape, Double Sided	
108	See Note	NSS	Nameplate - Serial Number (Note: Not Available for Purchase)	
109	1001163287	2	Decal - Glazier Capacity	
110	1701509	1	Decal - Manual	
	0272418	Ref	SKYGLAZIER DECAL INSTALLATION	4
201	1705358	2	Decal - SkyGlazier	

FIGURE 5-35. SKYGLAZIER INSTALLATION (LATIN AMERICAN SPECS)

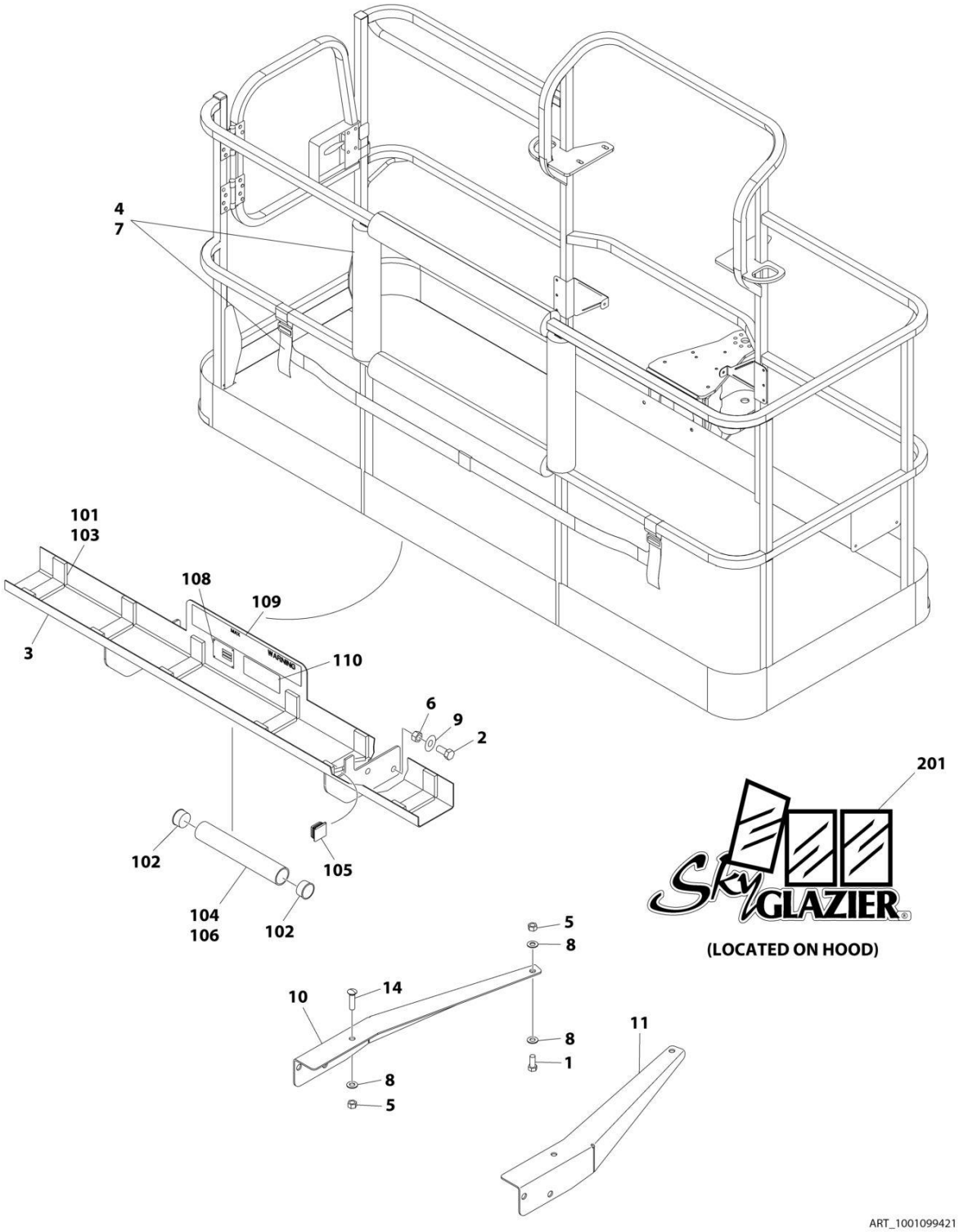

FIGURE 5-35. SKYGLAZIER INSTALLATION (LATIN AMERICAN SPECS)

ITEM	PART NUMBER	QTY	DESCRIPTION	REV
	1001099421	Ref	SKYGLAZIER INSTALLATION	C
1	0642012	2	Bolt 5/8 x 1-1/2	
2	0642212	4	Bolt 3/4 x 1-1/2	
3	0272948	1	Tray Assembly (See Items 101-110 for Breakdown)	
4	2902212	1	Bumpers and Strap Kit	
4	0940102	1	Bumper Only	
4	4240149	1	Strap Only	
5	3312005	4	Nut 5/8	
6	3312205	4	Nut 3/4	
7	4420014	AR	Tape	
8	4712000	6	Washer 5/8	
9	4712200	8	Washer 3/4	
10	1001099366	1	Support	
11	1001099367	1	Support	
14	8310129	2	Bolt 3/4 x 2-1/2	
	0272948	Ref	TRAY ASSEMBLY	F
101	0100081	AR	Adhesive	
102	1120555	2	Cap, Tube	
103	3340956	1	Pad Kit	
104	3460334	1	Tube	
105	3520071	2	Plug	
106	4420066	AR	Tape, Double Sided	
108	See Note	NSS	Nameplate - Serial Number (Note: Not Available for Purchase)	
109	1001163296	2	Decal - Glazier Capacity	
110	1701509	1	Decal - Manual	
	0272418	Ref	SKYGLAZIER DECAL INSTALLATION	4
201	1705358	2	Decal - SkyGlazier	

FIGURE 5-36. SKYGLAZIER INSTALLATION (PORTUGUESE SPECS)

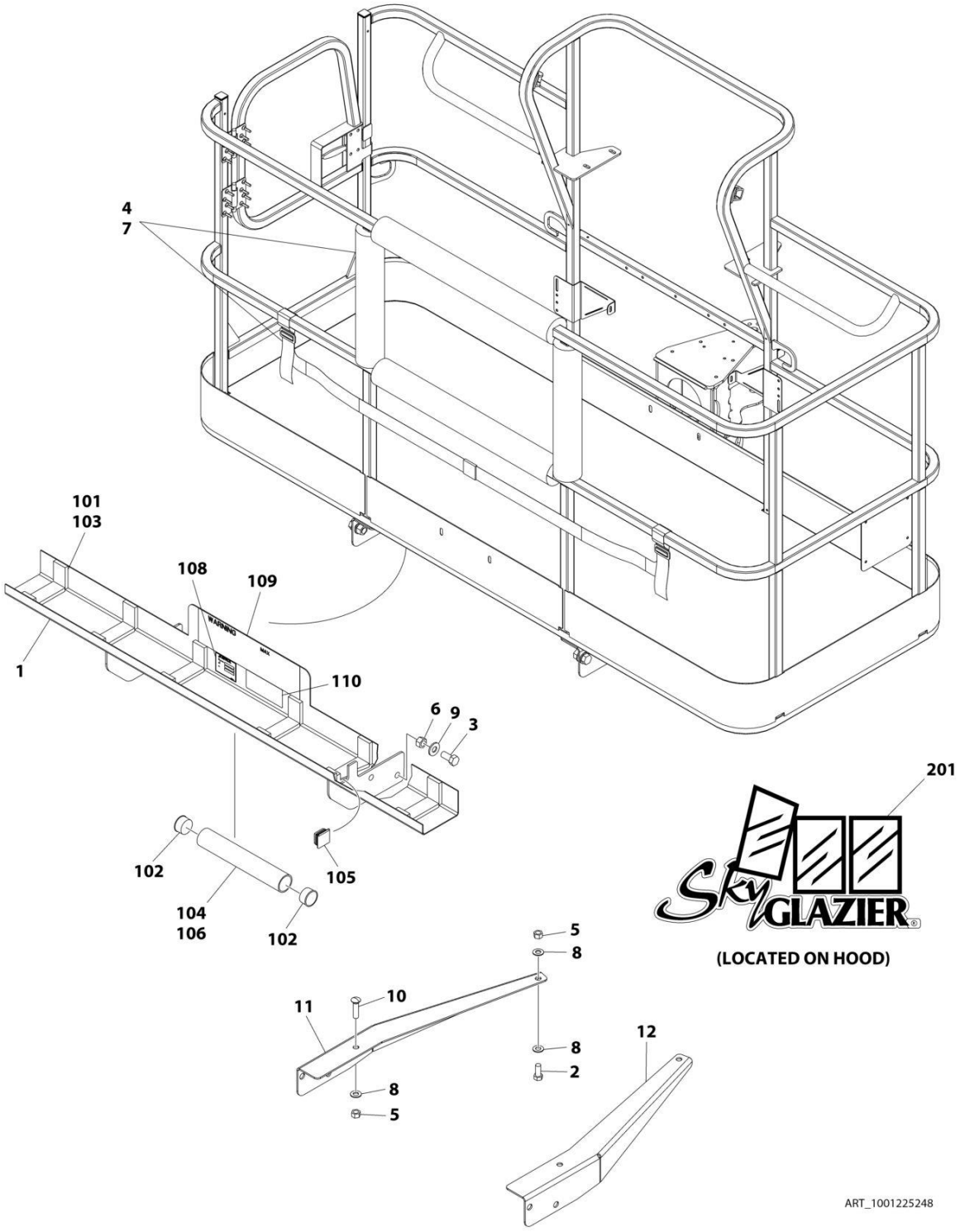

FIGURE 5-36. SKYGLAZIER INSTALLATION (PORTUGUESE SPECS)

ITEM	PART NUMBER	QTY	DESCRIPTION	REV
	1001225248	Ref	SKYGLAZIER INSTALLATION	A
1	0273406	1	Tray Assembly (See Items 101-110 for Breakdown)	
2	0642012	2	Bolt 5/8 x 1-1/2	
3	0642212	4	Bolt 3/4 x 1-1/2	
4	2902212	1	Bumpers and Strap Kit	
4	0940102	1	Bumper Only	
4	4240149	1	Strap Only	
5	3312005	4	Nut 5/8	
6	3312205	4	Nut 3/4	
7	4420014	AR	Tape	
8	4712000	6	Washer 5/8	
9	4712200	8	Washer 3/4	
10	8310129	2	Bolt 5/8 x 2-1/2	
11	1001099366	1	Support	
12	1001099367	1	Support	
	0273406	Ref	TRAY ASSEMBLY	E
101	0100081	AR	Adhesive	
102	1120555	2	Cap, Tube	
103	3340956	1	Pad Kit	
104	3460334	1	Tube	
105	3520071	2	Plug	
106	4420066	AR	Tape, Double Sided	
108	See Note	NSS	Nameplate - Serial Number (Note: Not Available for Purchase)	
109	1001163289	2	Decal - Glazier Capacity	
110	1701509	1	Decal - Manual	
	0272418	Ref	SKYGLAZIER DECAL INSTALLATION	4
201	1705358	2	Decal - SkyGlazier	

FIGURE 5-37. SKYGLAZIER INSTALLATION (SPANISH SPECS)

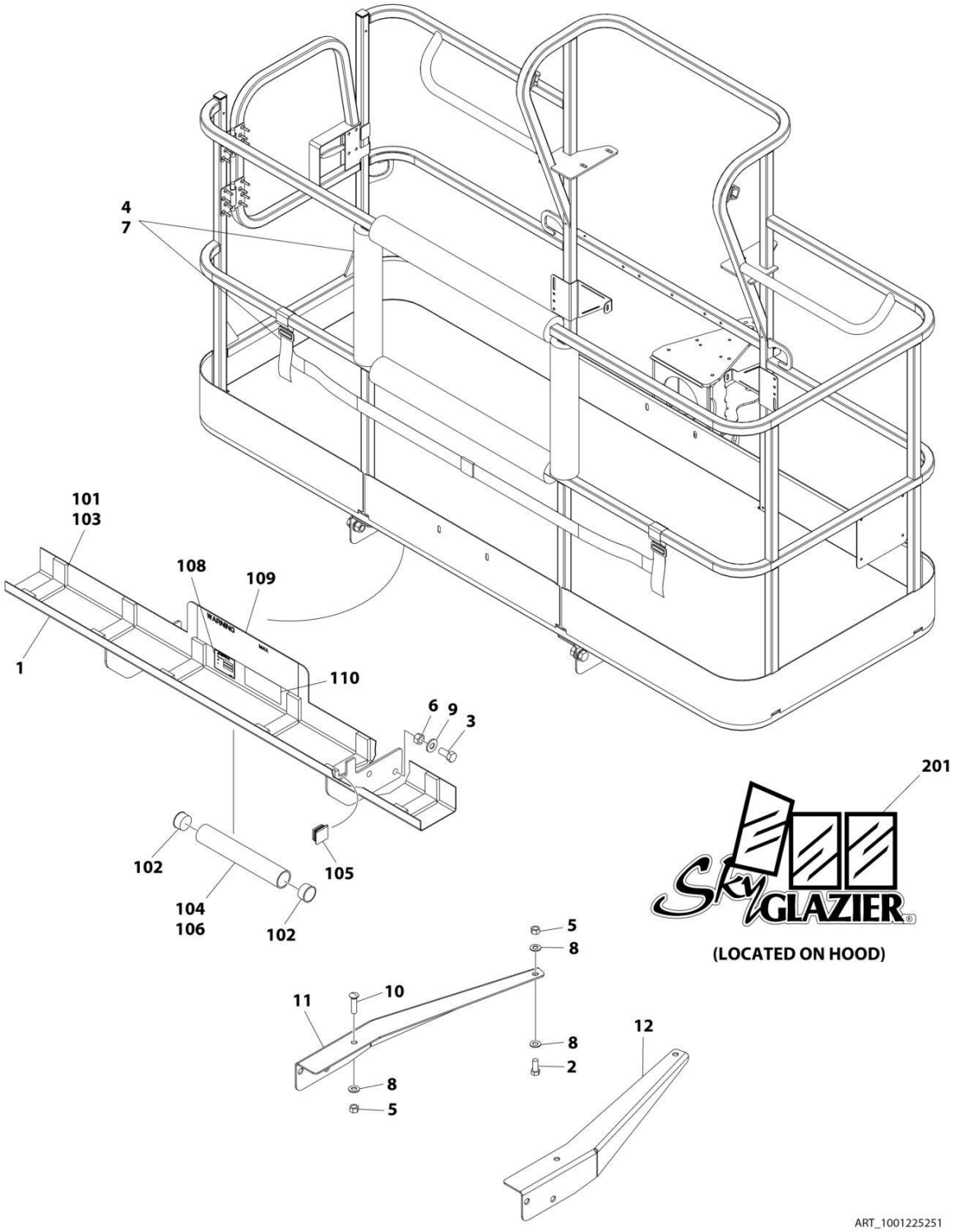

FIGURE 5-37. SKYGLAZIER INSTALLATION (SPANISH SPECS)

ITEM	PART NUMBER	QTY	DESCRIPTION	REV
	1001225251	Ref	SKYGLAZIER INSTALLATION	A
1	0273405	1	Tray Assembly (See Items 101-110 for Breakdown)	
2	0642012	2	Bolt 5/8 x 1-1/2	
3	0642212	4	Bolt 3/4 x 1-1/2	
4	2902212	1	Bumpers and Strap Kit	
4	0940102	1	Bumper Only	
4	4240149	1	Strap Only	
5	3312005	4	Nut 5/8	
6	3312205	4	Nut 3/4	
7	4420014	AR	Tape	
8	4712000	6	Washer 5/8	
9	4712200	8	Washer 3/4	
10	8310129	2	Bolt 5/8 x 2-1/2	
11	1001099366	1	Support	
12	1001099367	1	Support	
	0273405	Ref	TRAY ASSEMBLY	E
101	0100081	AR	Adhesive	
102	1120555	2	Cap, Tube	
103	3340956	1	Pad Kit	
104	3460334	1	Tube	
105	3520071	2	Plug	
106	4420066	AR	Tape, Double Sided	
108	See Note	NSS	Nameplate - Serial Number (Note: Not Available for Purchase)	
109	1001163288	2	Decal - Glazier Capacity	
110	1701509	1	Decal - Manual	
	0272418	Ref	SKYGLAZIER DECAL INSTALLATION	4
201	1705358	2	Decal - SkyGlazier	

FIGURE 5-38. SKYGLAZIER INSTALLATION (SWEDISH SPECS)

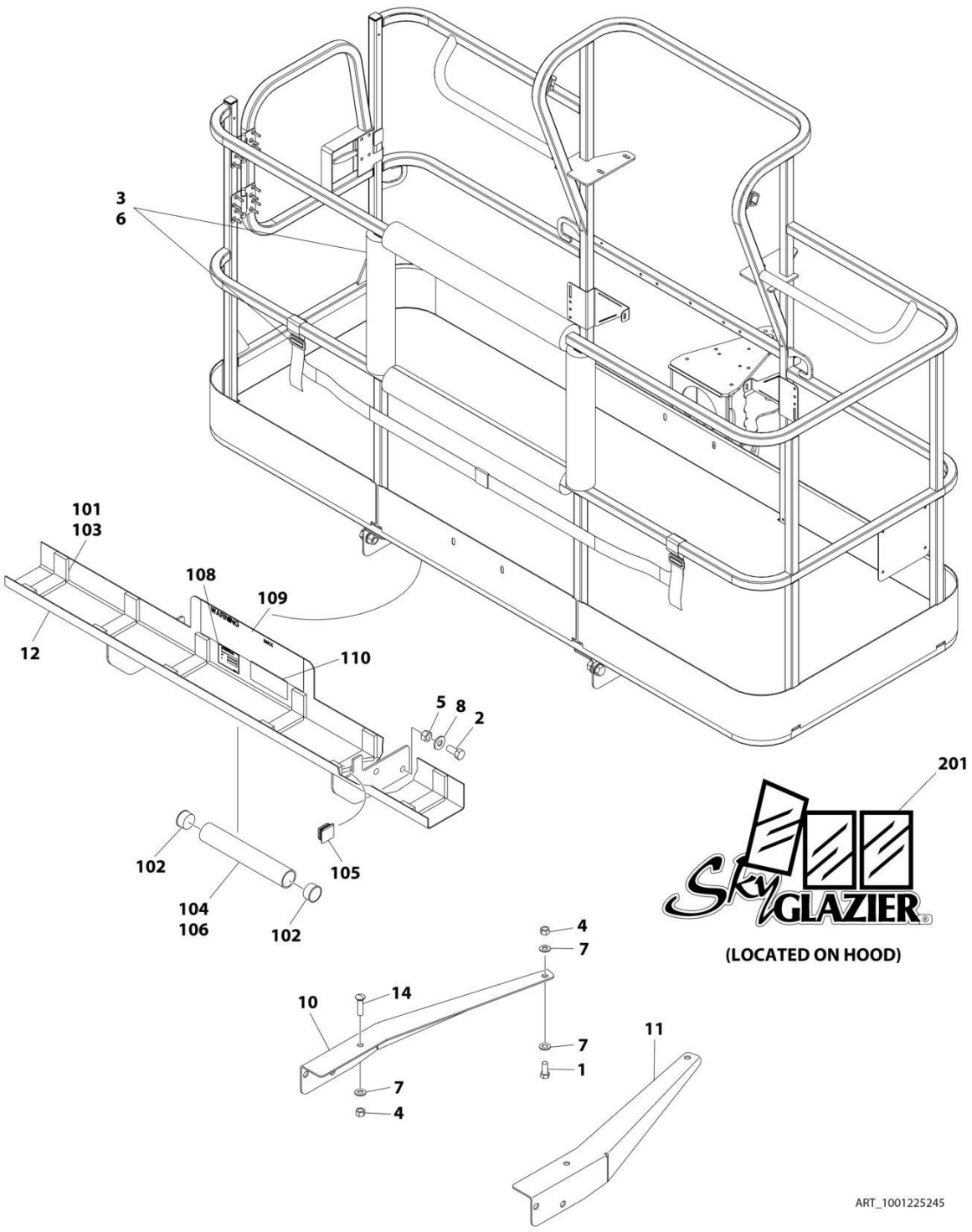

FIGURE 5-38. SKYGLAZIER INSTALLATION (SWEDISH SPECS)

ITEM	PART NUMBER	QTY	DESCRIPTION	REV
	1001225245	Ref	SKYGLAZIER INSTALLATION	B
1	0642012	2	Bolt 5/8 x 1-1/2	
2	0642212	4	Bolt 3/4 x 1-1/2	
3	2902212	1	Bumpers and Strap Kit	
3	0940102	1	Bumper Only	
3	4240149	1	Strap Only	
4	3312005	4	Nut 5/8	
5	3312205	4	Nut 3/4	
6	4420014	AR	Tape	
7	4712000	6	Washer 5/8	
8	4712200	8	Washer 3/4	
9	8310129	2	Bolt 5/8 x 2-1/2	
10	1001099366	1	Support	
11	1001099367	1	Support	
12	1001115603	1	Tray Assembly (See Items 101-110 for Breakdown)	
	1001115603	Ref	TRAY ASSEMBLY	D
101	0100081	AR	Adhesive	
102	1120555	2	Cap, Tube	
103	3340956	1	Pad Kit	
104	3460334	1	Tube	
105	3520071	2	Plug	
106	4420066	AR	Tape, Double Sided	
108	See Note	NSS	Nameplate - Serial Number (Note: Not Available for Purchase)	
109	1001163292	2	Decal - Glazier Capacity	
110	1701509	1	Decal - Manual	
	0272418	Ref	SKYGLAZIER DECAL INSTALLATION	4
201	1705358	2	Decal - SkyGlazier	

FIGURE 5-39. SKYGLAZIER INSTALLATION (UK SPECS)

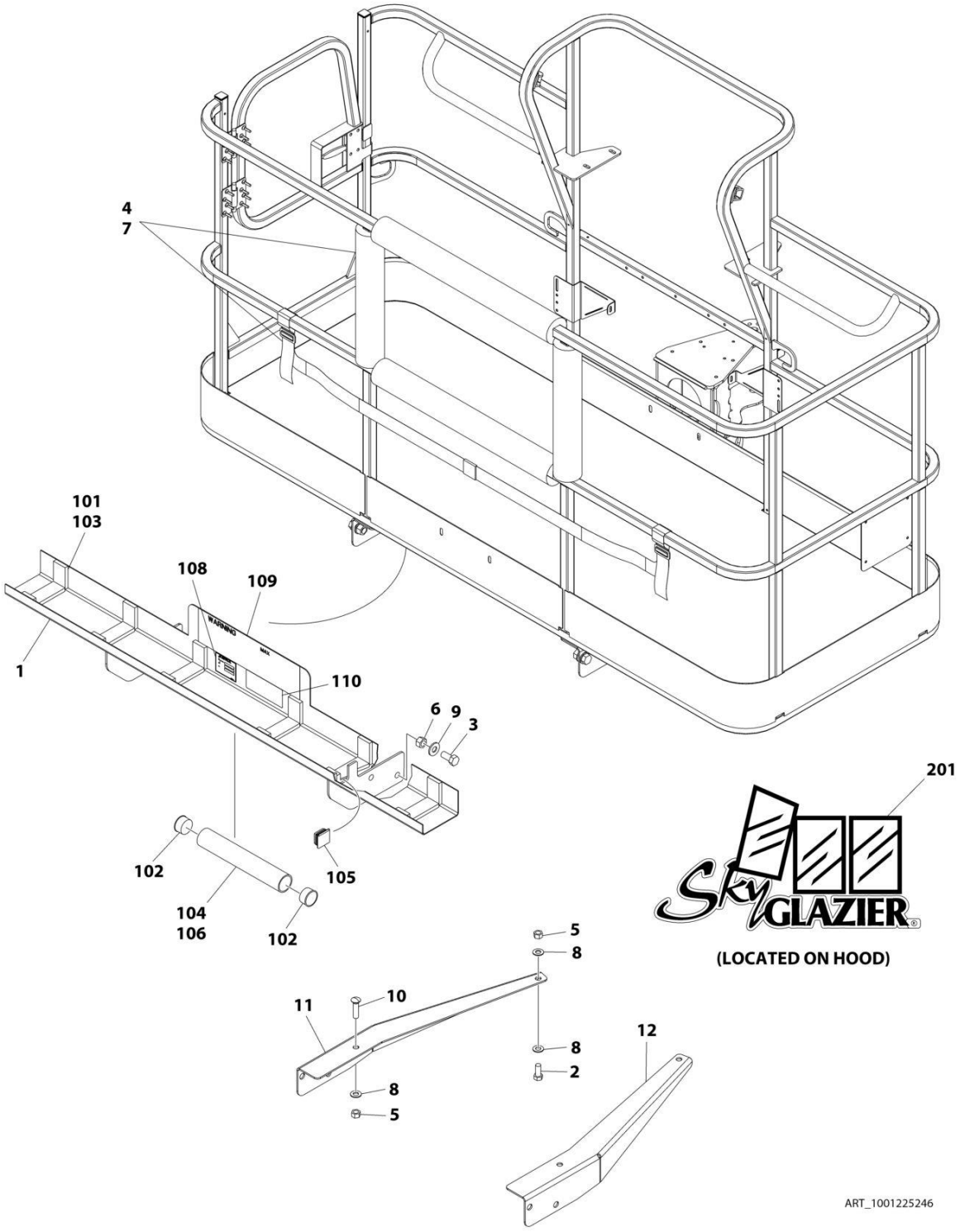

FIGURE 5-39. SKYGLAZIER INSTALLATION (UK SPECS)

ITEM	PART NUMBER	QTY	DESCRIPTION	REV
	1001225246	Ref	SKYGLAZIER INSTALLATION	A
1	0273404	1	Tray Assembly (See Items 101-110 for Breakdown)	
2	0642012	2	Bolt 5/8 x 1-1/2	
3	0642212	4	Bolt 3/4 x 1-1/2	
4	2902212	1	Bumpers and Strap Kit	
4	0940102	1	Bumper Only	
4	4240149	1	Strap Only	
5	3312005	4	Nut 3/4	
6	3312205	4	Nut 3/4	
7	4420014	AR	Tape	
8	4712000	6	Washer 5/8	
9	4712200	8	Washer 3/4	
10	8310129	2	Bolt 5/8 x 2-1/2	
11	1001099366	1	Support	
12	1001099367	1	Support	
	0273404	Ref	TRAY ASSEMBLY	F
101	0100081	AR	Adhesive	
102	1120555	2	Cap, Tube	
103	3340956	1	Pad Kit	
104	3460334	1	Tube	
105	3520071	2	Plug	
106	4420066	AR	Tape, Double Sided	
108	See Note	NSS	Nameplate - Serial Number (Note: Not Available for Purchase)	
109	1001163295	2	Decal - Glazier Capacity	
110	1701509	1	Decal - Manual	
	0272418	Ref	SKYGLAZIER DECAL INSTALLATION	4
201	1705358	2	Decal - SkyGlazier	

FIGURE 5-40. SKYCUTTER INSTALLATION

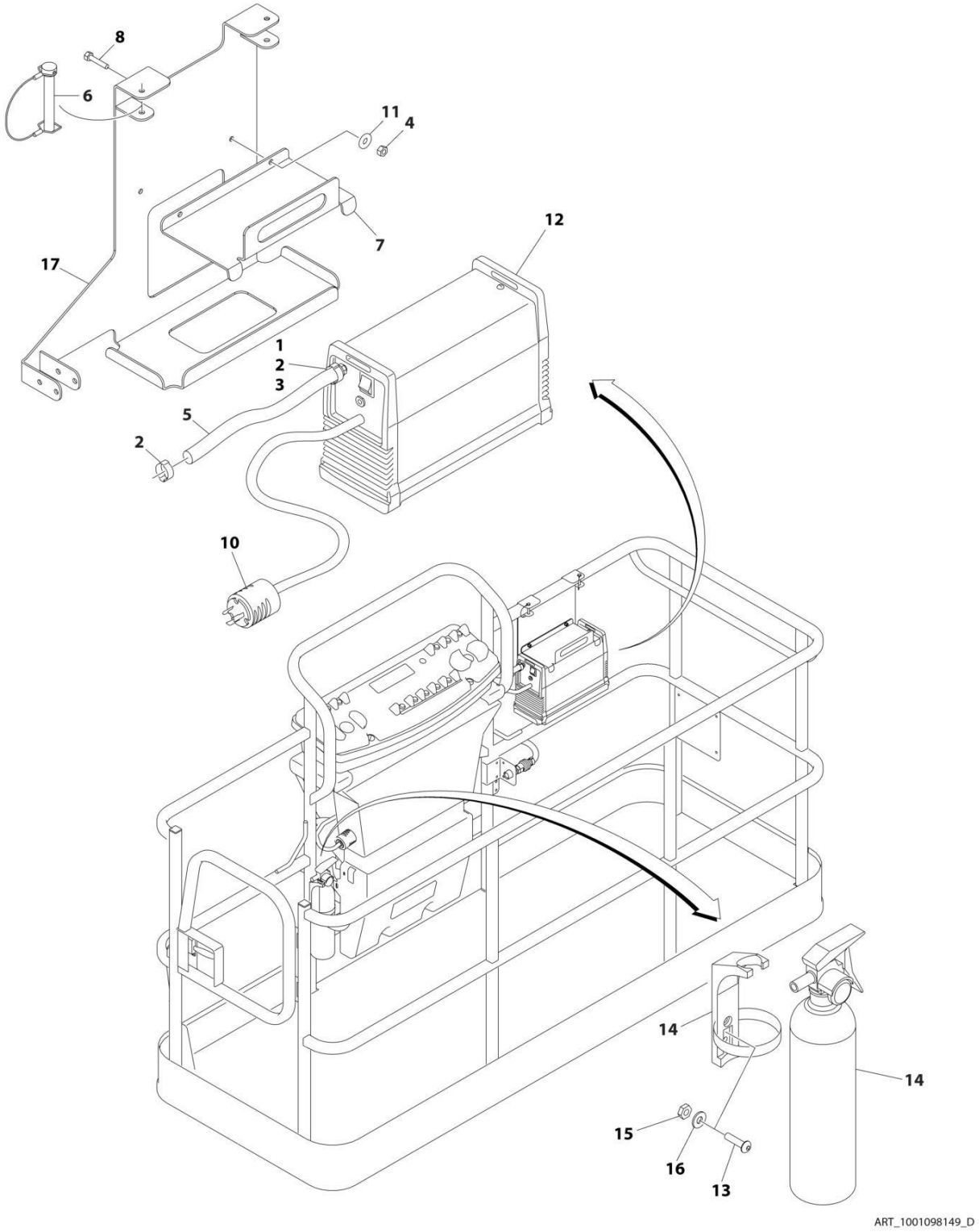

FIGURE 5-40. SKYCUTTER INSTALLATION

ITEM	PART NUMBER	QTY	DESCRIPTION	REV
	1001098149	Ref	SKYCUTTER INSTALLATION	D
		Ref	Note: When replacing platform on machines with SkyCutter option, new bracket p/n 1001145405 must be purchased to accommodate SkyCutter components.	
1	0100020	AR	Sealant	
2	1320177	2	Clamp, Hose	
3	2180832	1	Fitting, NPT/Barbed	
4	3290605	2	Nut M6	
5	2720160	3 ft /.9m	Hose	
6	3421453	3	Pin	
7	3576799	1	Plate, Hold-Down	
8	4010608	2	Screw M6 x 16	
10	4460971	1	Plug, Twistlock	
11	4811700	2	Washer M6	
12	1001098012	1	Plasma Cutter Assembly (See Separate Breakdown in this Section)	
13	0630518	2	Screw #10 x 3/4	
14	2030010	1	Extinguisher, Fire	
15	3311005	2	Nut #10	
16	4751000	2	Washer #10	
17	1001145405	1	Support	

FIGURE 5-41. SKYWELDER/SKYCUTTER COMBO INSTALLATION (60HZ)

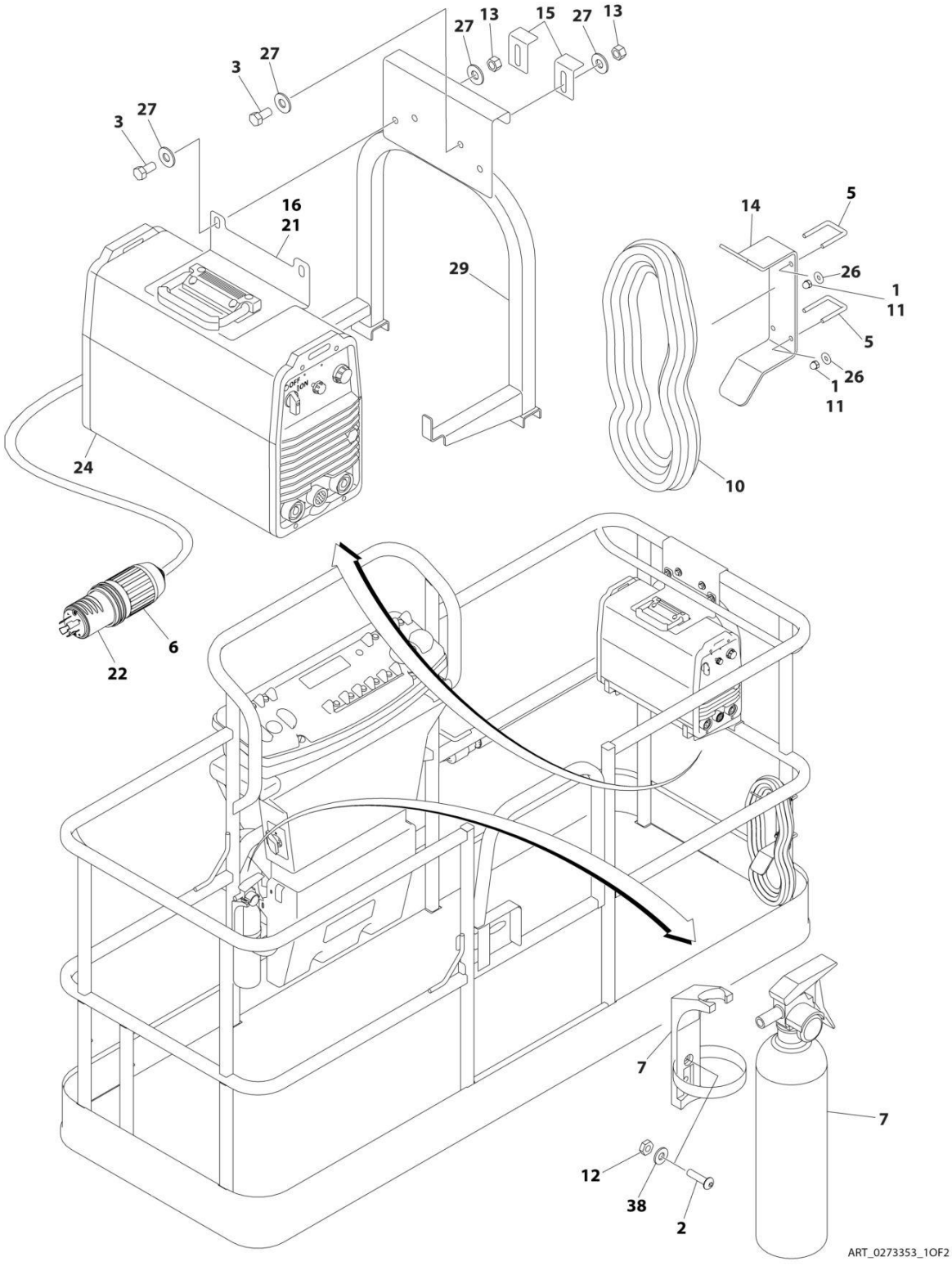

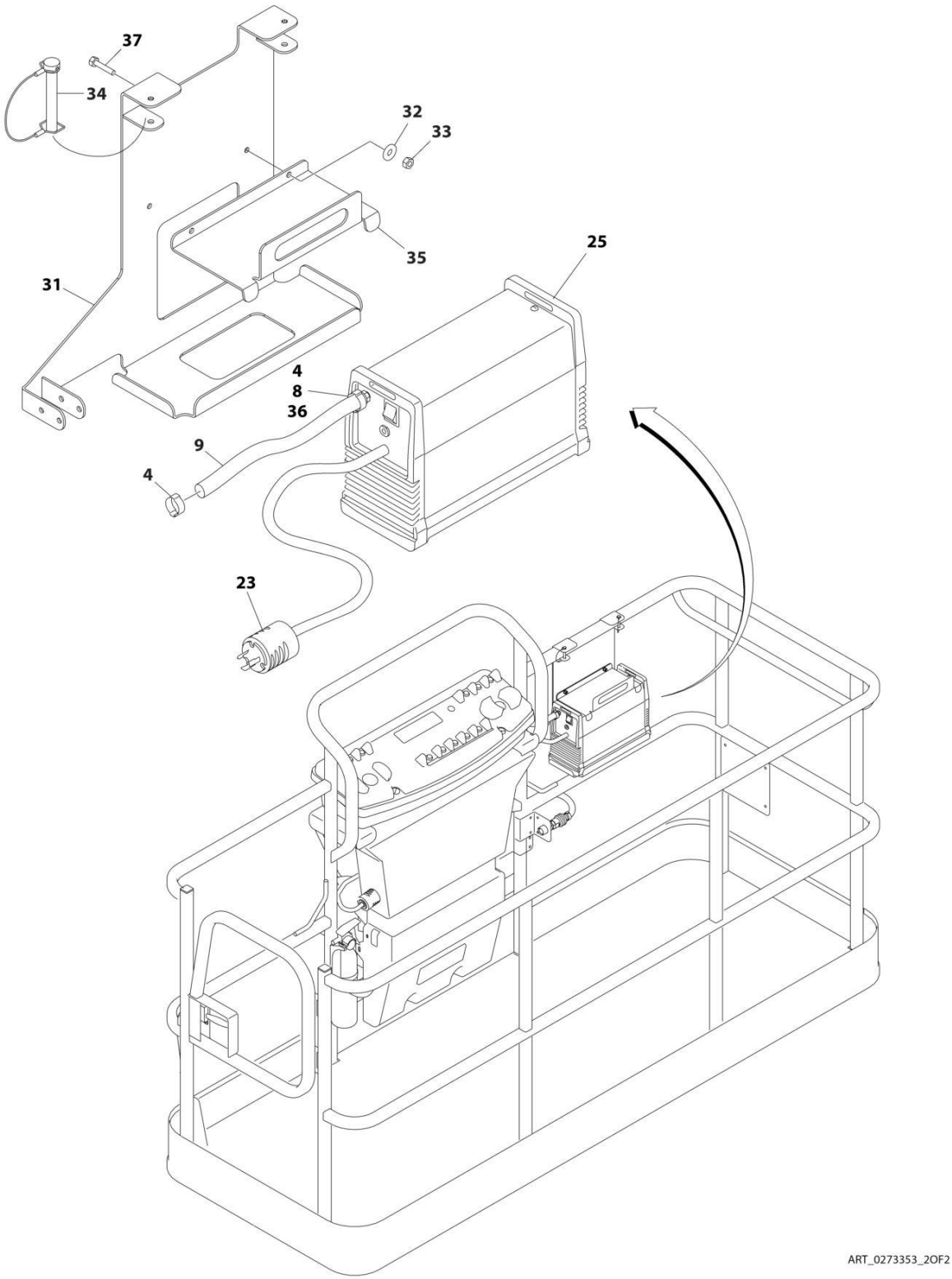
37
34
32
33
35
25
31
4
8
36
9
4
23
ART_0273353_2OF2

FIGURE 5-41. SKYWELDER/SKYCUTTER COMBO INSTALLATION (60HZ)

ITEM	PART NUMBER	QTY	DESCRIPTION	REV
	0273353	Ref	SKYWELDER/SKYCUTTER COMBO INSTALLATION (60HZ)	G
1	0100011	AR	Compound, Locking	
2	0630518	2	Screw #10 x 3/4	
3	0641606	4	Bolt 3/8 x 3/4	
4	1320177	2	Clamp	
5	1320302	2	Clamp	
6	1671093	1	Cover, Plug	
7	2030010	1	Extinguisher, Fire	
8	2180832	1	Fitting, Barbed/NPT	
9	2720160	4.5 ft /1.37m	Hose	
10	2902217	1	Weld Leads Kit	
11	3300151	4	Nut 1/4	
12	3311005	2	Nut #10	
13	3311605	4	Nut 3/8	
14	3573400	1	Bracket	
15	3577121	2	Angle	
16	3573642	1	Plate	
20	4240099	AR	Tie-Strap (Not Shown)	
21	4420037	2.36 ft /.71m	Tape	
22	4460962	1	Plug, Twist Lock	
23	4460971	1	Plug, Twist Lock	
24	4530028	1	Welder Assembly (See Separate Breakdown in this section)	
25	1001098012	1	Plasma Cutter Assembly (See Separate Breakdown in this Section)	
26	4751400	4	Washer 1/4	
27	4751600	8	Washer 3/8	
29	4846627	1	Support	
31	1001145405	1	Bracket	
32	4811700	2	Washer M6	
33	3290605	2	Nut M6	
34	3421453	3	Pin	
35	3576799	1	Plate, Hold-Down	
36	0100020	1	Sealant	
37	4010608	2	Screw M6 x 16	
38	4751000	2	Washer #10	

FIGURE 5-42. PLASMA CUTTER ASSEMBLY

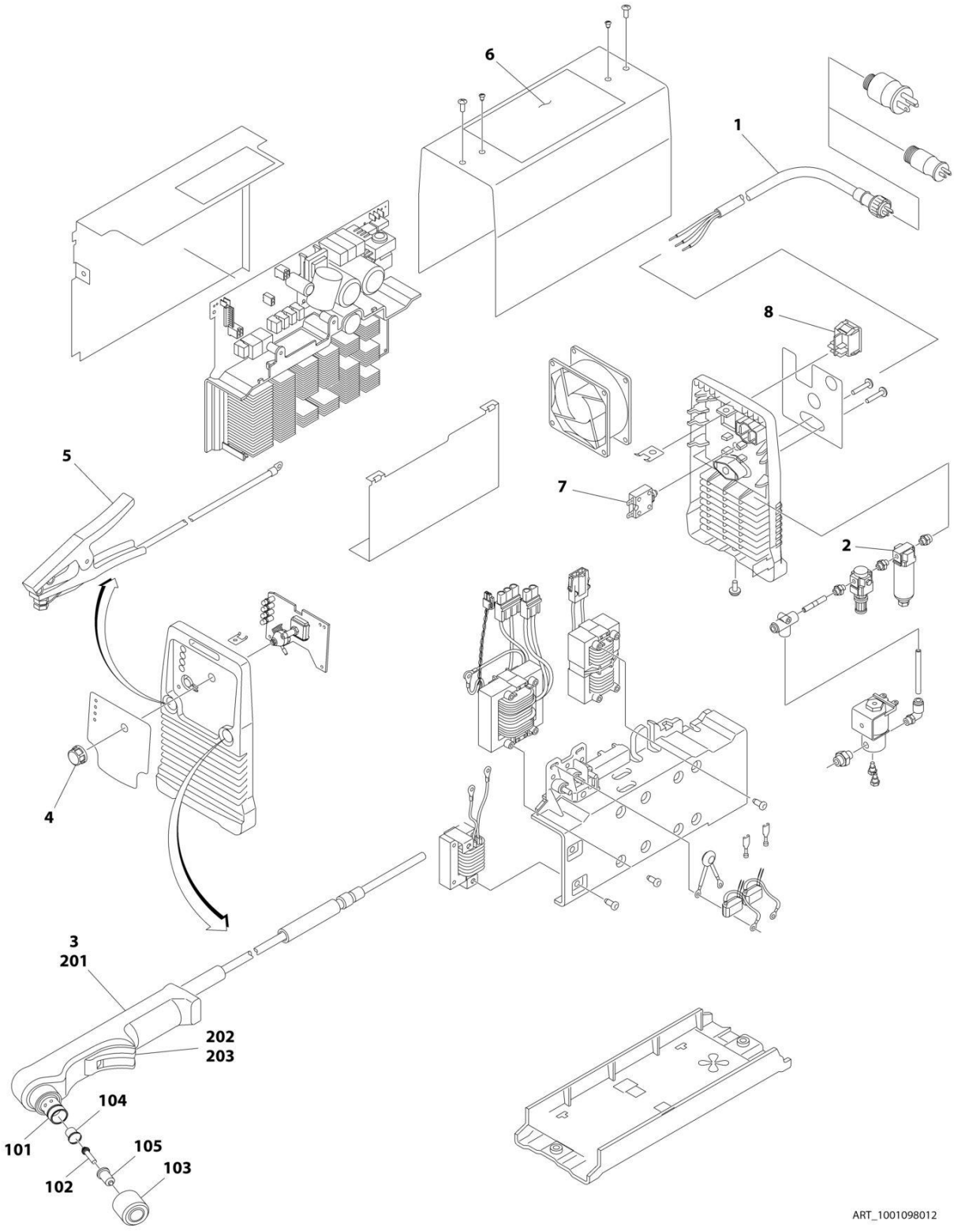

FIGURE 5-42. PLASMA CUTTER ASSEMBLY

ITEM	PART NUMBER	QTY	DESCRIPTION	REV
	1001098012	Ref	PLASMA CUTTER ASSEMBLY	A
		Ref	Note: For Other Components, contact your Miller Welder Dealer.	
1	70001424	1	Cable, Power	
1	70001425	1	Decal - Voltage Warning	
2	70001427	1	Filter, Regulator	
3	70001428	1	Torch Assembly (See Items 101-203 for Breakdown)	
4	7024471	1	Knob	
5	70001429	1	Clamp with Cable	
6	70001430	1	Decal - Caution	
7	70001431	1	Breaker, Circuit	
8	70001432	1	Switch, Rocker	
	70001428	Ref	TORCH ASSEMBLY	
101	7024530	1	O-Ring	
102	7024531	1	Electrode	
103	7024532	1	Cup, Retaining	
104	7024533	1	Swirl Ring	
105	7024534	1	Tip	
201	7024535	1	Handle, Torch	
202	7024536	1	Switch	
203	7024537	1	Trigger	

FIGURE 5-43. SKYWELDER INSTALLATION (50HZ)

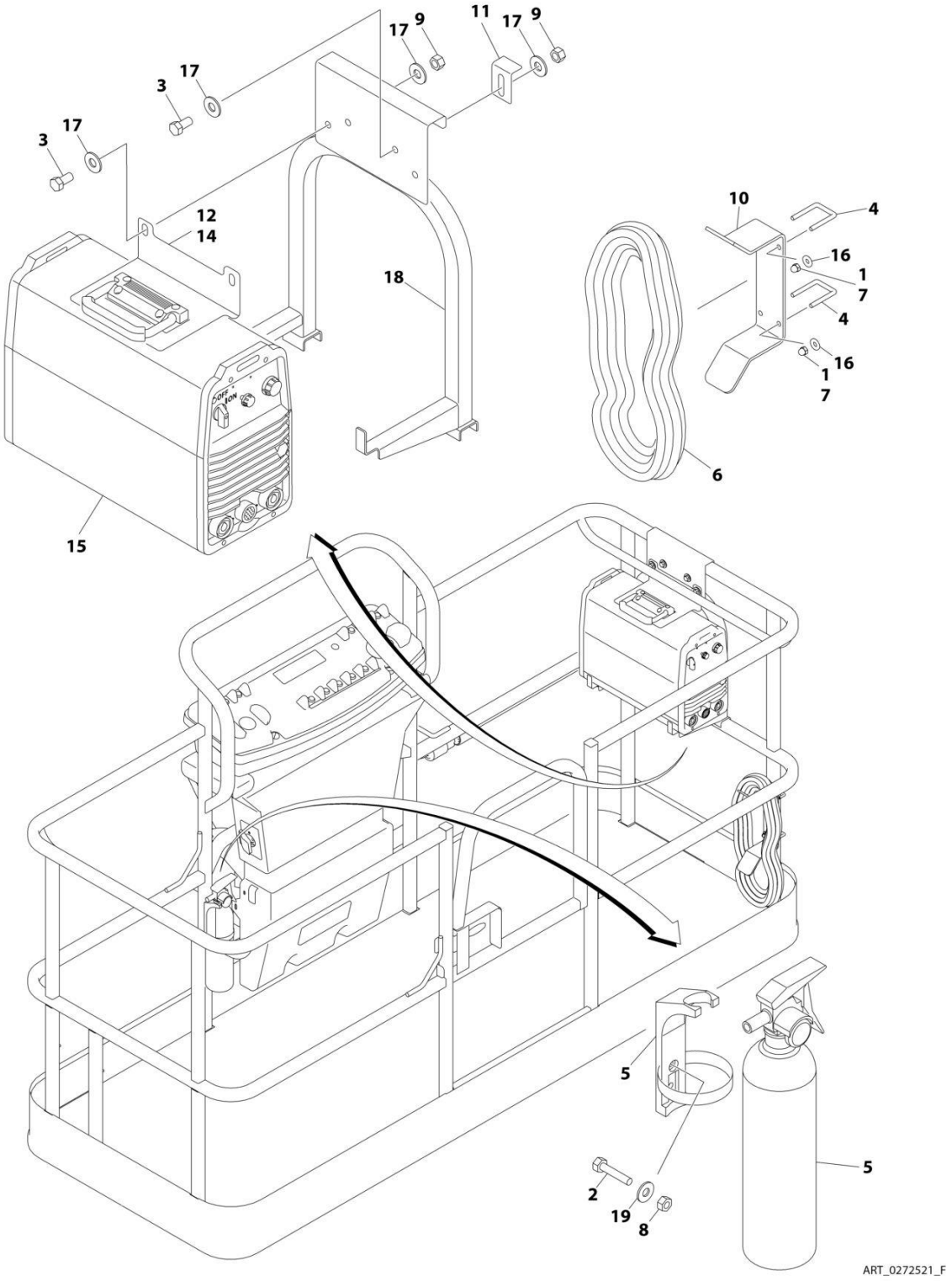

FIGURE 5-43. SKYWELDER INSTALLATION (50HZ)

ITEM	PART NUMBER	QTY	DESCRIPTION	REV
	0272521	Ref	SKYWELDER INSTALLATION	F
1	0100011	AR	Compound, Locking	
2	0630518	2	Screw #10 x 3/4	
3	0641606	4	Bolt 3/8 x 3/4	
4	1320302	2	U-Clamp	
5	2030010	1	Extinguisher, Fire	
6	2902217	1	Weld Leads Kit	
7	3300151	4	Nut 1/4	
8	3311005	2	Nut #10	
9	3311605	4	Nut 3/8	
10	3573400	1	Bracket	
11	3577121	2	Angle	
12	3573642	1	Plate	
13	4240099	AR	Tie-Strap (Not Shown)	
14	4420037	AR	Tape	
15	4530028	1	Welder Assembly (See Separate Breakdown in this Section)	
16	4751400	4	Washer 1/4	
17	4751600	8	Washer 3/8	
18	4846627	1	Support	
19	4751000	2	Washer #10	

FIGURE 5-44. SKYWELDER INSTALLATION (60HZ)

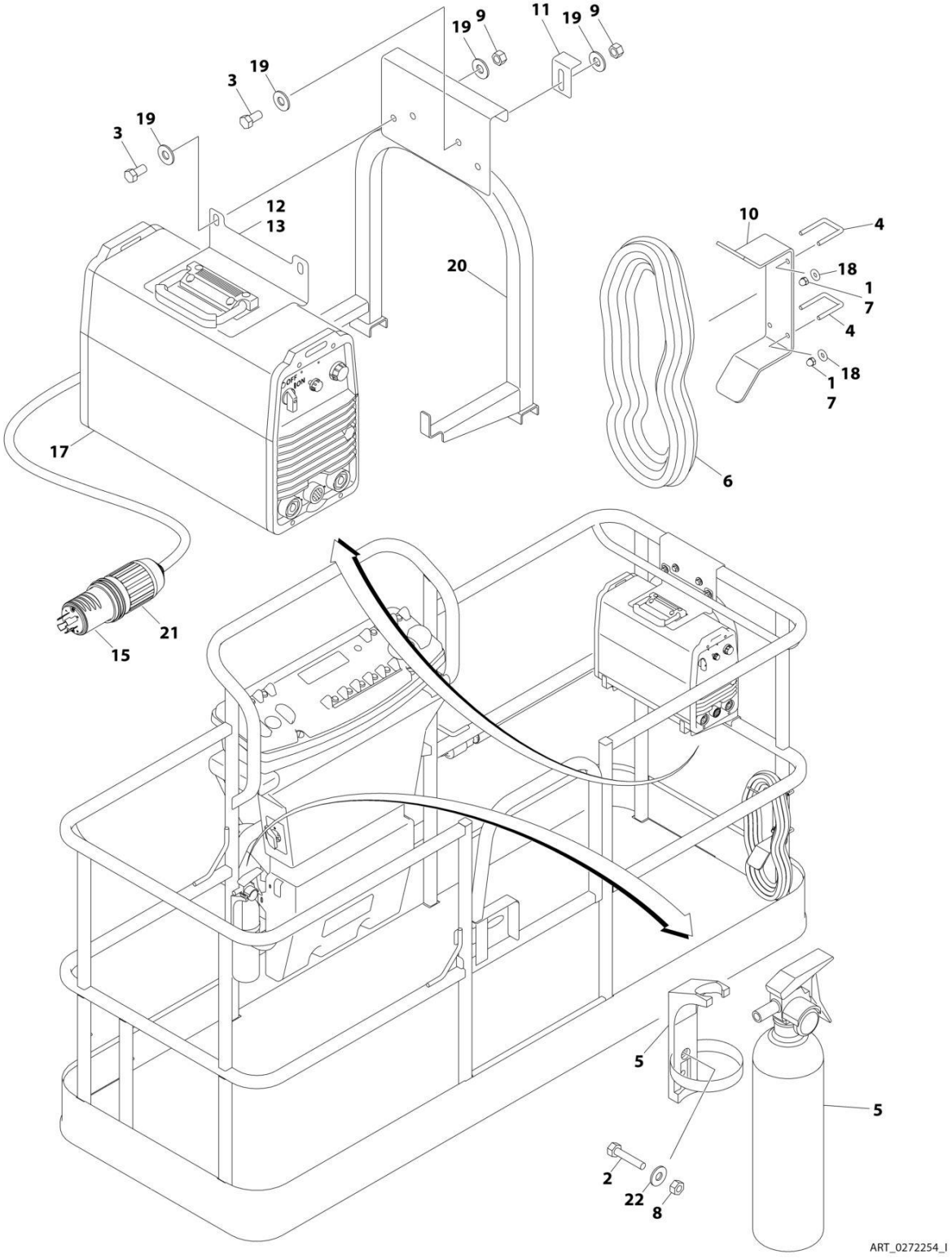

FIGURE 5-44. SKYWELDER INSTALLATION (60HZ)

ITEM	PART NUMBER	QTY	DESCRIPTION	REV
	0272254	Ref	SKYWELDER INSTALLATION	I
1	0100011	AR	Compound, Locking	
2	0630518	2	Screw #10 x 3/4	
3	0641606	4	Bolt 3/8 x 3/4	
4	1320302	2	U-Clamp	
5	2030010	1	Extinguisher, Fire	
6	2902217	1	Weld Leads Kit	
7	3300151	4	Nut 1/4	
8	3311005	2	Nut #10	
9	3311605	4	Nut 3/8	
10	3573400	1	Bracket	
11	3577121	2	Angle	
12	3573642	1	Plate	
13	4420037	AR	Tape	
14	4240099	AR	Tie-Strap (Not Shown)	
15	4460962	1	Plug, Male Twistlock	
17	4530028	1	Welder Assembly (See Separate Breakdown in this Section)	
18	4751400	4	Washer 1/4	
19	4751600	8	Washer 3/8	
20	4846627	1	Support	
21	1671093	1	Cover, Plug	
22	4751000	2	Washer #10	

FIGURE 5-45. SKYWELDER PREP PACKAGE (60HZ)

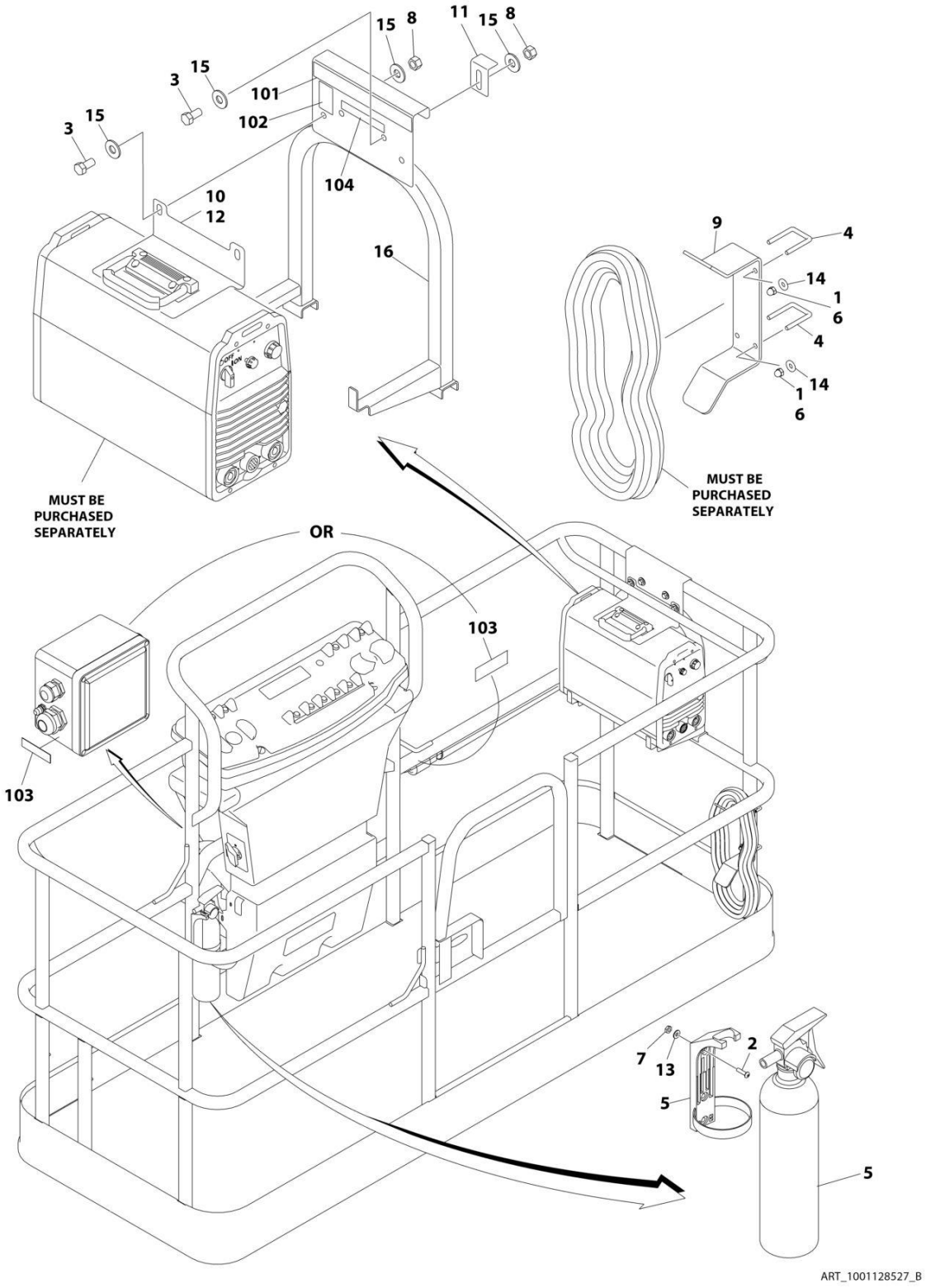

FIGURE 5-45. SKYWELDER PREP PACKAGE (60HZ)

ITEM	PART NUMBER	QTY	DESCRIPTION	REV
	1001128527	Ref	SKYWELDER PREP PACKAGE	B
1	0100011	AR	Compound, Locking	
2	0630518	2	Screw #10 x 3/4	
3	0641606	4	Bolt 3/8 x 3/4	
4	1320302	2	U-Clamp	
5	2030010	1	Extinguisher, Fire	
6	3300151	4	Nut 1/4	
7	3311005	2	Nut #10	
8	3311605	4	Nut 3/8	
9	3573400	1	Bracket	
10	3573642	1	Plate	
11	3577121	2	Angle	
12	4420037	AR	Tape	
13	4751000	2	Washer #10	
14	4751400	4	Washer 1/4	
15	4751600	8	Washer 3/8	
16	4846627	1	Support	
	1001128556	Ref	SKYWELDER DECAL INSTALLATION	C
101	1702868	1	Decal - No Hands	
102	1705305	1	Decal - Weld Lead	
103	1705375	1	Decal - 240V - 3 Phase - 60Hz	
104	1001228988	1	Decal - Weight	

FIGURE 5-46. WELDER ASSEMBLY

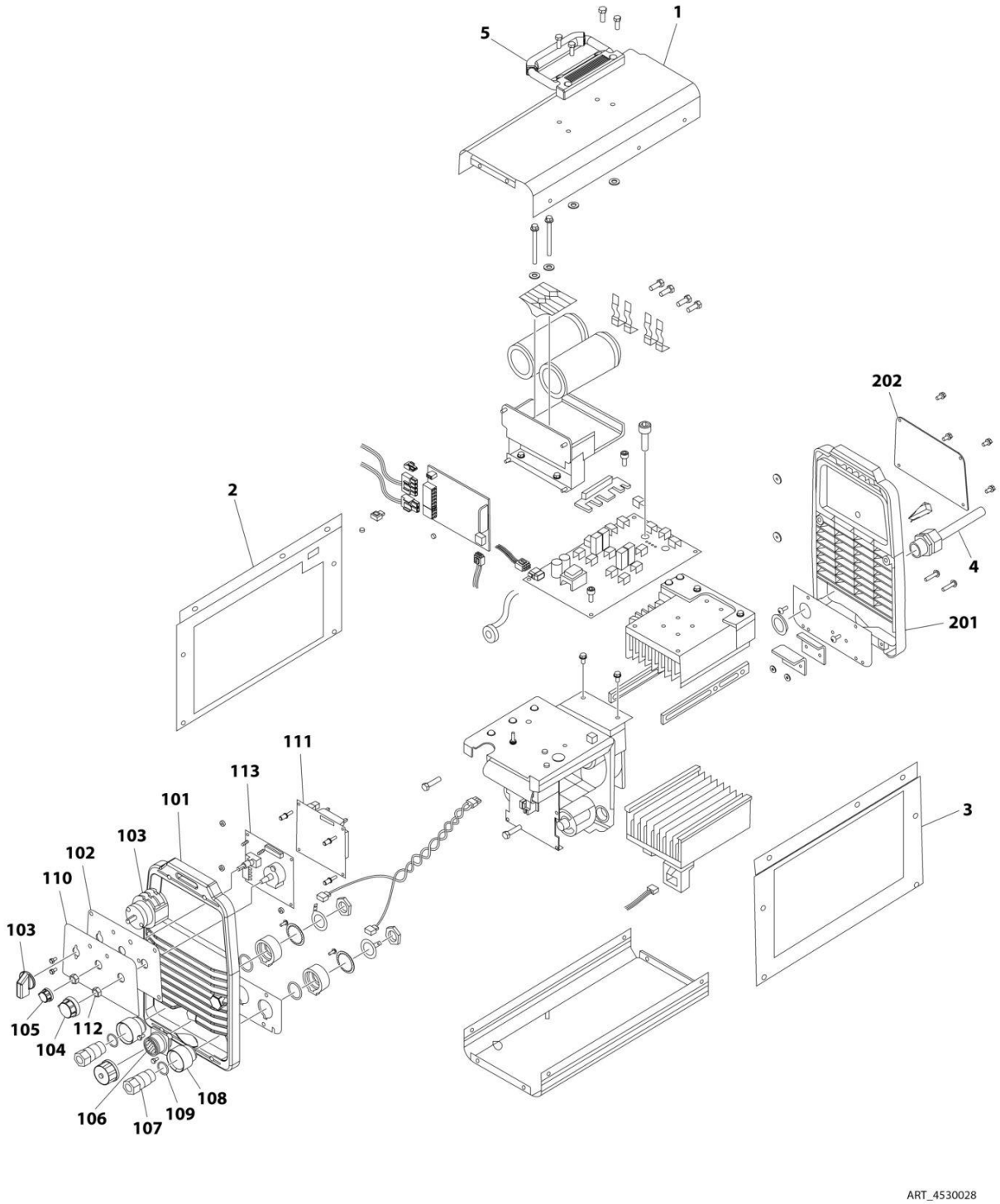

FIGURE 5-46. WELDER ASSEMBLY

ITEM	PART NUMBER	QTY	DESCRIPTION	REV
	4530028	Ref	WELDER ASSEMBLY	B
		Ref	Note: For Other Components, contact your Miller Welder Dealer.	
1	7027773	1	Cover, Top	
1	7027774	1	Decal - Static Precautionary Warning	
2	See Note	NSS	Panel, LH Side (Note: Part of Item 1. Purchase Item 1)	
3	See Note	NSS	Panel, RH Side (Note: Part of Item 1. Purchase Item 1)	
4	7024467	1	Cable, Power	
4	7027775	1	Decal - Electrical Shock Warning (Not Shown)	
5	7027776	1	Handle, Carrying	
101	7024462	1	Panel, Front	
102	7024463	1	Panel, Console	
103	7024469	1	Switch with Lead	
104	7024470	1	Knob	
105	7024471	1	Knob	
106	7024472	1	Receptacle with Leads and Plugs	
107	7024473	2	Receptacle, Twistlock Female	
108	7024474	2	Insulator	
109	7024475	2	O-Ring	
110	7027777	1	Nameplate	
111	7027779	1	Circuit Card Assembly (Process Control)	
112	7024478	2	Nut	
113	7027778	1	Circuit Card Assembly (Operator Interface)	
201	7024462	1	Panel, Rear	
202	7027780	1	Panel, Cover	

FIGURE 5-47. FALL ARREST INSTALLATION (BOLT - ON EXTERNAL) 6FT/1.82M PLATFORM

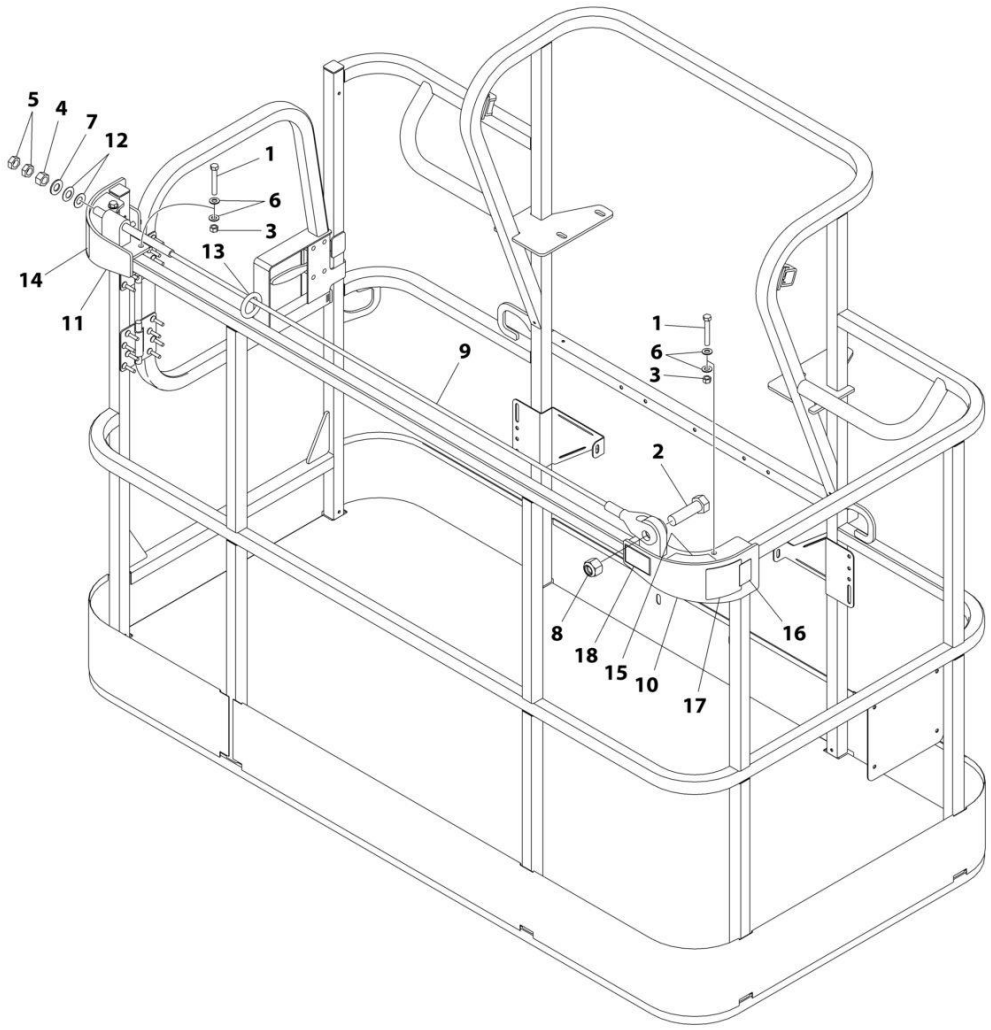

FIGURE 5-47. FALL ARREST INSTALLATION (BOLT - ON EXTERNAL) 6FT/1.82M PLATFORM

ITEM	PART NUMBER	QTY	DESCRIPTION	REV
	1001236747	Ref	FALL ARREST INSTALLATION (BOLT - ON) 6FT/1.82M PLATFORM	C
1	0681620	6	Bolt 3/8 x 2-1/2	
2	0682424	1	Bolt 7/8 x 3	
3	3271605	6	Nut 3/8	
4	3272001	1	Nut 5/8	
5	3312002	2	Nut 5/8	
6	4711600	12	Washer 3/8	
7	4712000	1	Washer 5/8	
8	88521214	1	Nut 7/8	
9	1001231950	1	Rope	
10	1001232010	1	Bracket (RH)	
11	1001232011	1	Bracket (LH)	
12	1001236891	2	Washer	
13	1001236895	1	Ring	
14	1001238263	1	Decal - Warning Falling Hazard	
15	1001252629	1	Decal - Weight	
16	1001248140	1	Decal - Bolt Fall Arrest Re-Cert	
17	1001248141	1	Decal - Inscription	

FIGURE 5-48. FALL ARREST INSTALLATION (BOLT - ON EXTERNAL) 6FT/1.82M PLATFORM

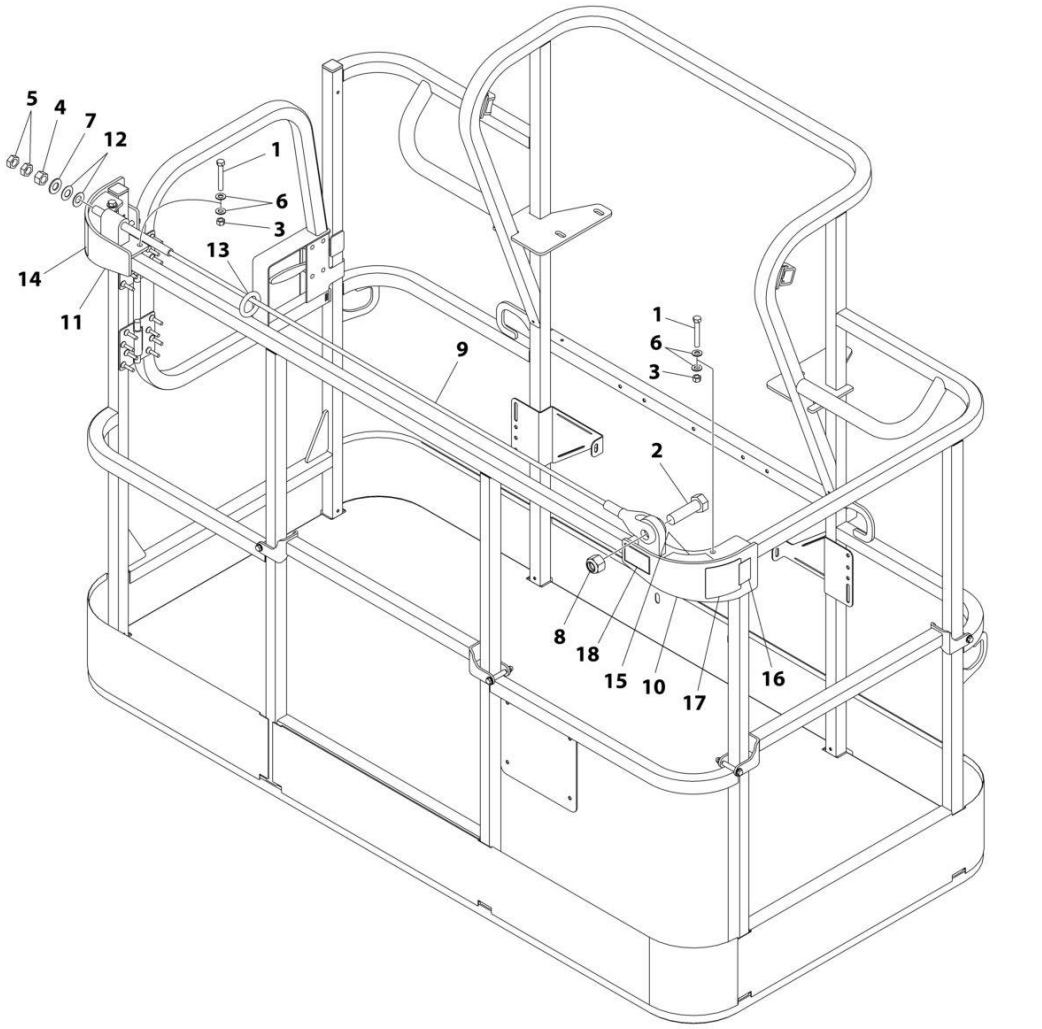

FIGURE 5-48. FALL ARREST INSTALLATION (BOLT - ON EXTERNAL) 6FT/1.82M PLATFORM

ITEM	PART NUMBER	QTY	DESCRIPTION	REV
	1001238463	Ref	FALL ARREST INSTALLATION (BOLT - ON) 6FT/1.82M PLATFORM	C
1	0681620	6	Bolt 3/8 x 2-1/2	
2	0682424	1	Bolt 7/8 x 3	
3	3271605	6	Nut 3/8	
4	3272001	1	Nut 5/8	
5	3312002	2	Nut 5/8	
6	4711600	12	Washer 3/8	
7	4712000	1	Washer 5/8	
8	88521214	1	Nut 7/8	
9	1001231950	1	Rope	
10	1001232010	1	Bracket (RH)	
11	1001232011	1	Bracket (LH)	
12	1001236891	2	Washer	
13	1001236895	1	Ring	
14	1001238263	1	Decal - Warning Falling Hazard	
15	1001252629	1	Decal - Weight	
16	1001248140	1	Decal - Bolt Fall Arrest Re-Cert	
17	1001248141	1	Decal - Inscription	

FIGURE 5-49. FALL ARREST INSTALLATION (BOLT - ON EXTERNAL) 8FT/2.4M PLATFORM

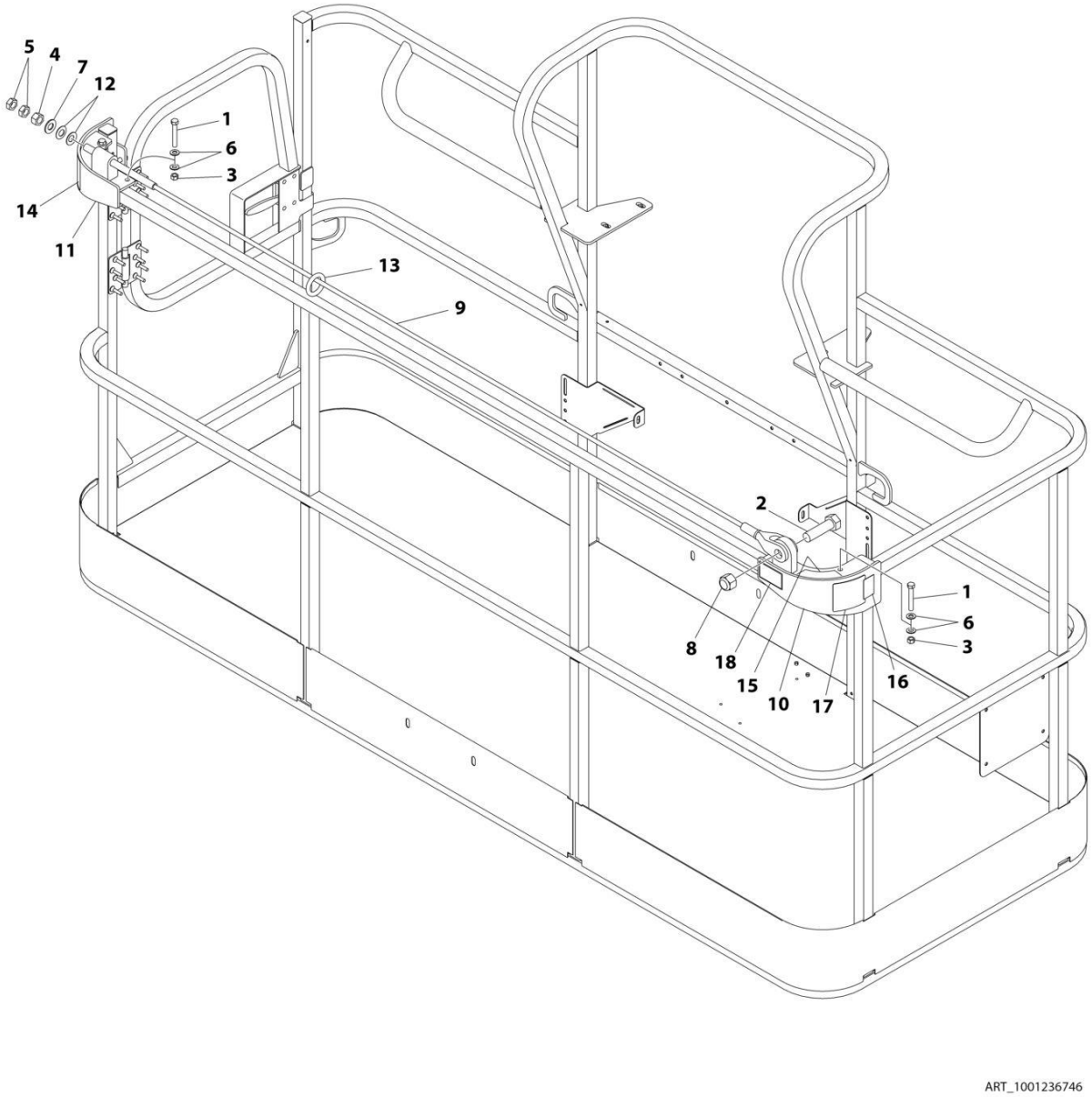

FIGURE 5-49. FALL ARREST INSTALLATION (BOLT - ON EXTERNAL) 8FT/2.4M PLATFORM

ITEM	PART NUMBER	QTY	DESCRIPTION	REV
	1001236746	Ref	FALL ARREST INSTALLATION (BOLT - ON) 8FT/2.4M PLATFORM	C
1	0681620	6	Bolt 3/8 x 2-1/2	
2	0682424	1	Bolt 7/8 x 3	
3	3271605	6	Nut 3/8	
4	3272001	1	Nut 5/8	
5	3312002	2	Nut 5/8	
6	4711600	12	Washer 3/8	
7	4712000	1	Washer 5/8	
8	88521214	1	Nut 7/8	
9	1001231949	1	Rope	
10	1001232010	1	Bracket (RH)	
11	1001232011	1	Bracket (LH)	
12	1001236891	2	Washer	
13	1001236895	1	Ring	
14	1001238263	1	Decal - Warning Falling Hazard	
15	1001252629	1	Decal - Weight 23LBS/10.4KG	
16	1001248140	1	Decal - Bolt Fall Arrest Re-Cert	
17	1001248141	1	Decal - Inscription	

SECTION 6 - CYLINDER

SECTION 6 - CYLINDER

FIGURE 6-1. AXLE EXTENSION CYLINDER ASSEMBLY

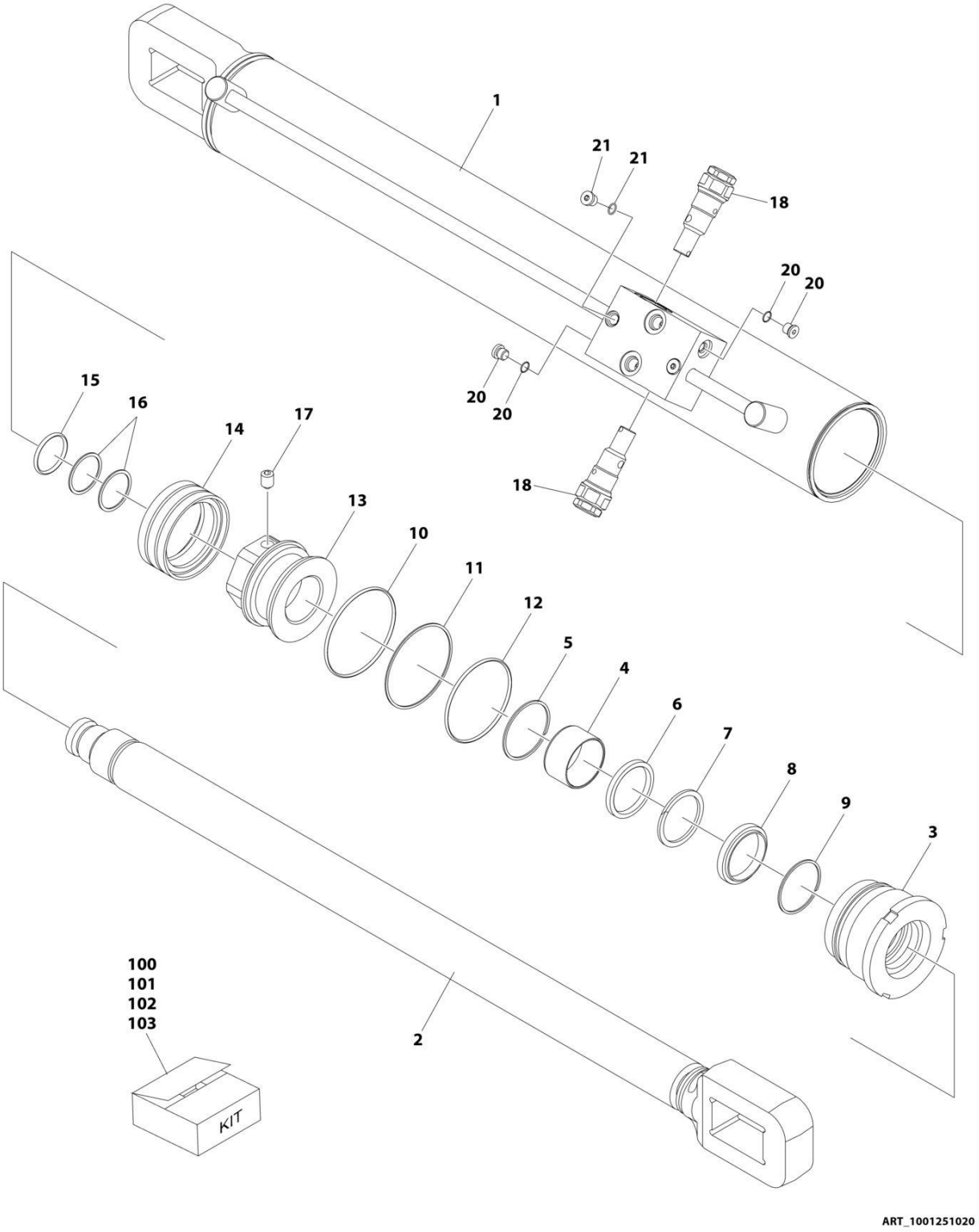

FIGURE 6-1. AXLE EXTENSION CYLINDER ASSEMBLY

ITEM	PART NUMBER	QTY	DESCRIPTION	REV
	1001251020	Ref	AXLE EXTENSION CYLINDER ASSEMBLY	A
		Ref	Note: Original Cylinder May Have Been Replaced with Service Replacement. Identify PN Stamped on Cylinder Before Ordering Parts.	
1	See Note	NSS	Barrel (Note: Use p/n 1001251020)	
2	70007382	1	Rod	
3	See Note	NSS	Head (Use Item 100)	
5	See Note	NSS	Ring (Note: Use Item 100)	
6	See Note	NSS	Seal (Note: Use Item 101)	
7	See Note	NSS	Ring, Back-up (Note: Use Item 101)	
8	See Note	NSS	Wiper, Rod (Note: Use Item 101)	
9	See Note	NSS	Ring, Retaining (Note: Use Item 101)	
10	See Note	NSS	O-Ring (Note: Use Item 101)	
11	See Note	NSS	Ring, Back-up (Note: Use Item 101)	
12	See Note	NSS	O-Ring (Note: Use Item 101)	
13	See Note	NSS	Piston (Note: Use Item 102)	
14	See Note	NSS	Seal (Note: Use Item 101)	
15	See Note	NSS	O-Ring (Note: Use Item 101)	
16	See Note	NSS	Ring, Back-up (Note: Use Item 101)	
17	See Note	NSS	Setscrew (Note: Use Item 102)	
18	4640509	2	Cartridge, Holding Valve	
18	2900792	2	Seal Kit - 4640509 Cartridge Valve (1 Per Assembly)	
20	See Note	NSS	Plug (Note: Use Item 103)	
21	See Note	NSS	Plug (Note: Use Item 103)	
100	70007383	1	Rod Cover Kit (Includes Items 3-5)	
101	70007384	1	Seal Kit (Includes Items 6-12 & 14-16)	
102	70007385	1	Piston Kit (Includes Items 13 & 17)	
103	70007386	1	Plug Kit (Includes Items 20 & 21)	

FIGURE 6-2. AXLE LOCKOUT CYLINDER ASSEMBLY (Prior to SN 0300294726, Except SN 0300285461 through 0300285462, Except SN 0300280457 through 0300290458)

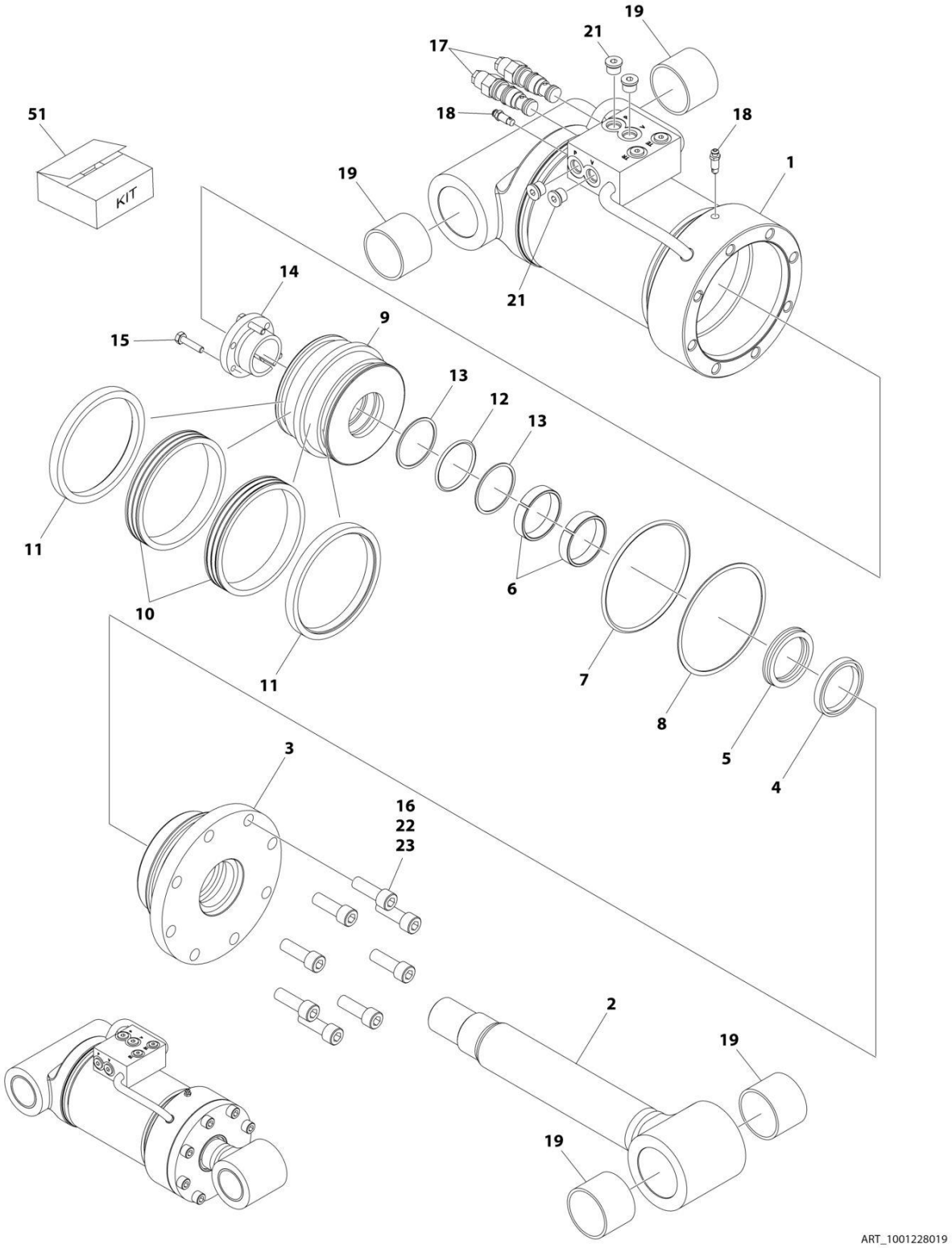

FIGURE 6-2. AXLE LOCKOUT CYLINDER ASSEMBLY (Prior to SN 0300294726, Except SN 0300285461 through 0300285462, Except SN 0300280457 through 0300290458)

ITEM	PART NUMBER	QTY	DESCRIPTION	REV
	1001228019	Ref	AXLE LOCKOUT CYLINDER ASSEMBLY	D
		Ref	Note: Original Cylinder May Have Been Replaced with Service Replacement. Identify PN Stamped on Cylinder Before Ordering Parts.	
1	See Note	NSS	Barrel (Note: Not Available for Purchase)	
2	70006520	1	Rod	
3	70006474	1	Head	
4	See Note	NSS	Wiper (Note: Use Item 51)	
5	See Note	NSS	Seal, Rod (Note: Use Item 51)	
6	See Note	NSS	Ring, Wear (Note: Use Item 51)	
7	See Note	NSS	O-Ring (Note: Use Item 51)	
8	See Note	NSS	Ring, Back-up (Note: Use Item 51)	
9	70006473	1	Piston	
10	See Note	NSS	Seal (Note: Use Item 51)	
11	See Note	NSS	Ring, Lock (Note: Use Item 51)	
12	See Note	NSS	O-Ring (Note: Use Item 51)	
13	See Note	NSS	Ring, Back-up (Note: Use Item 51)	
14	0961896	1	Bushing	
15	0630535	3	Bolt 1/4 x 1-1/8	
16	3931824	8	Bolt 1/2 x 1-1/2	
17	4641276	2	Cartridge, Valve Options: (Counterbalance)	
17	2900770	2	Seal Kit - 4641276 Valve (1 Per Assembly)	
18	4640858	2	Valve, Bleeder	
19	0961950	4	Bearing	
21	2220885	4	Plug, O-Ring	
22	0100011	AR	Compound, Locking	
23	0100038	AR	Primer, Locking	
51	2902087	1	Seal Kit (Includes Items 4-8 & 10-13)	

FIGURE 6-3. AXLE LOCKOUT CYLINDER ASSMBLY (SN 0300294726 to Present)

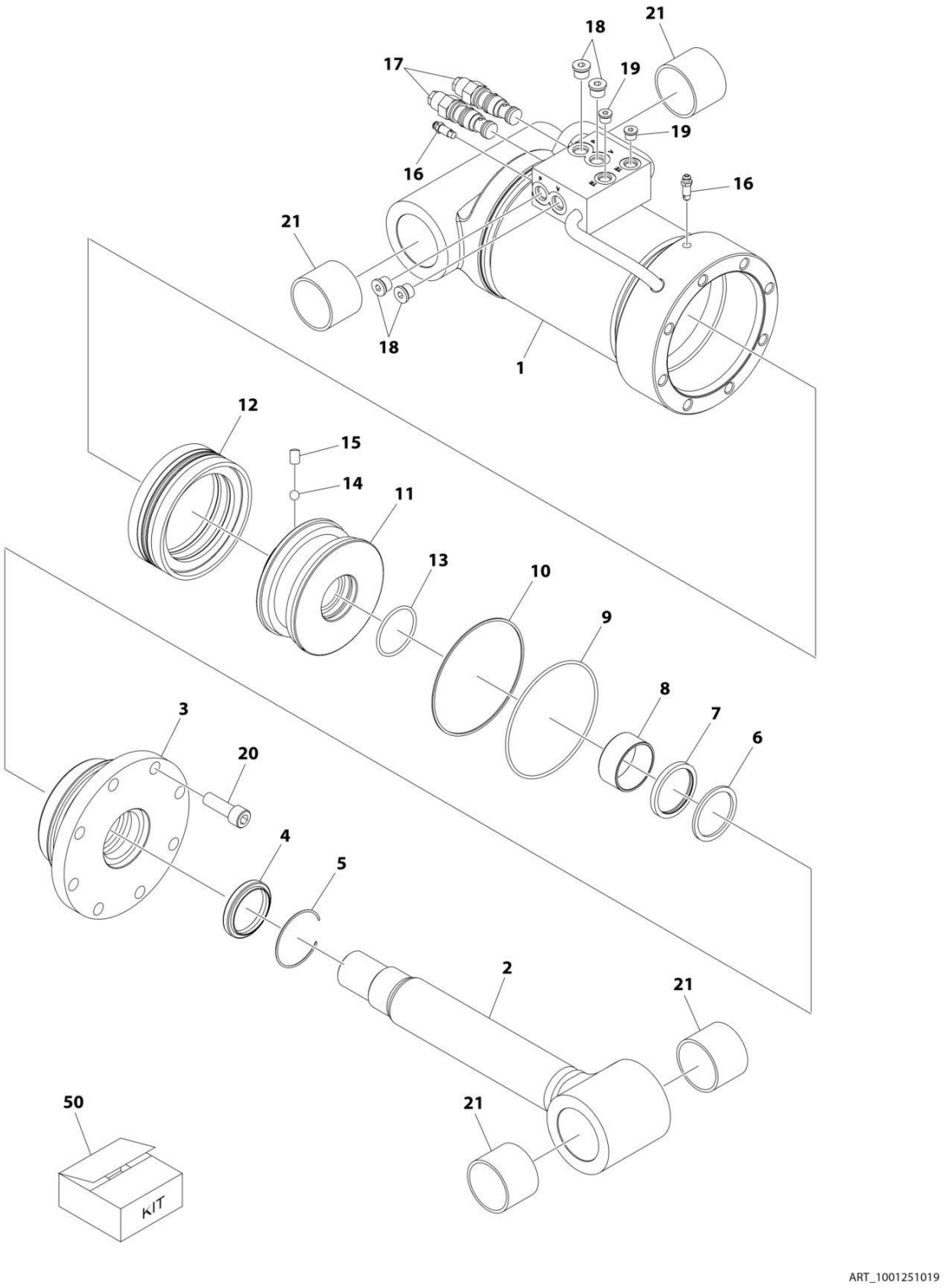

FIGURE 6-3. AXLE LOCKOUT CYLINDER ASSMBLY (SN 0300294726 to Present)

ITEM	PART NUMBER	QTY	DESCRIPTION	REV
	1001251019	Ref	AXLE LOCKOUT CYLINDER ASSEMBLY	B
		Ref	Note: Original Cylinder May Have Been Replaced with Service Replacement. Identify PN Stamped on Cylinder Before Ordering Parts.	
1	See Note	NSS	Barrel (Note: Use PN 1001251019)	
2	70007984	1	Rod	
3	70007985	1	Head	
4	See Note	NSS	Wiper (Note: Use Item 50)	
5	70002412	1	Ring, Retaining	
6	See Note	NSS	Seal, Rod (Note: Use Item 50)	
7	See Note	NSS	Ring, Back-up (Note: Use Item 50)	
8	70005153	1	Bearing	
9	See Note	NSS	O-Ring (Note: Use Item 50)	
10	See Note	NSS	Ring, Back-up (Note: Use Item 50)	
11	7007986	1	Piston	
12	See Note	NSS	Seal, Piston (Note: Use Item 50)	
13	See Note	NSS	O-Ring (Note: Use Item 50)	
14	70022564	1	Ball	
15	70006596	1	Setscrew M8 x 12	
16	70007987	2	Bleeder	
17	4641276	2	Cartridge, Valve - Counterbalance	
17	2900770	2	Seal Kit - 4641276 Valve	
18	2220885	4	Plug 9/16	
19	2220883	2	Plug 7/16	
20	70007988	8	Bolt M12 x 50	
21	0961950	4	Bearing	
50	70007989	1	Seal Kit - 1001251019 Cylinder (Includes Items 4, 6, 7, 9, 10, 12 & 13)	

FIGURE 6-4. PLATFORM LEVEL CYLINDER ASSEMBLY - WITHOUT COLD WEATHER PLUS PACKAGE

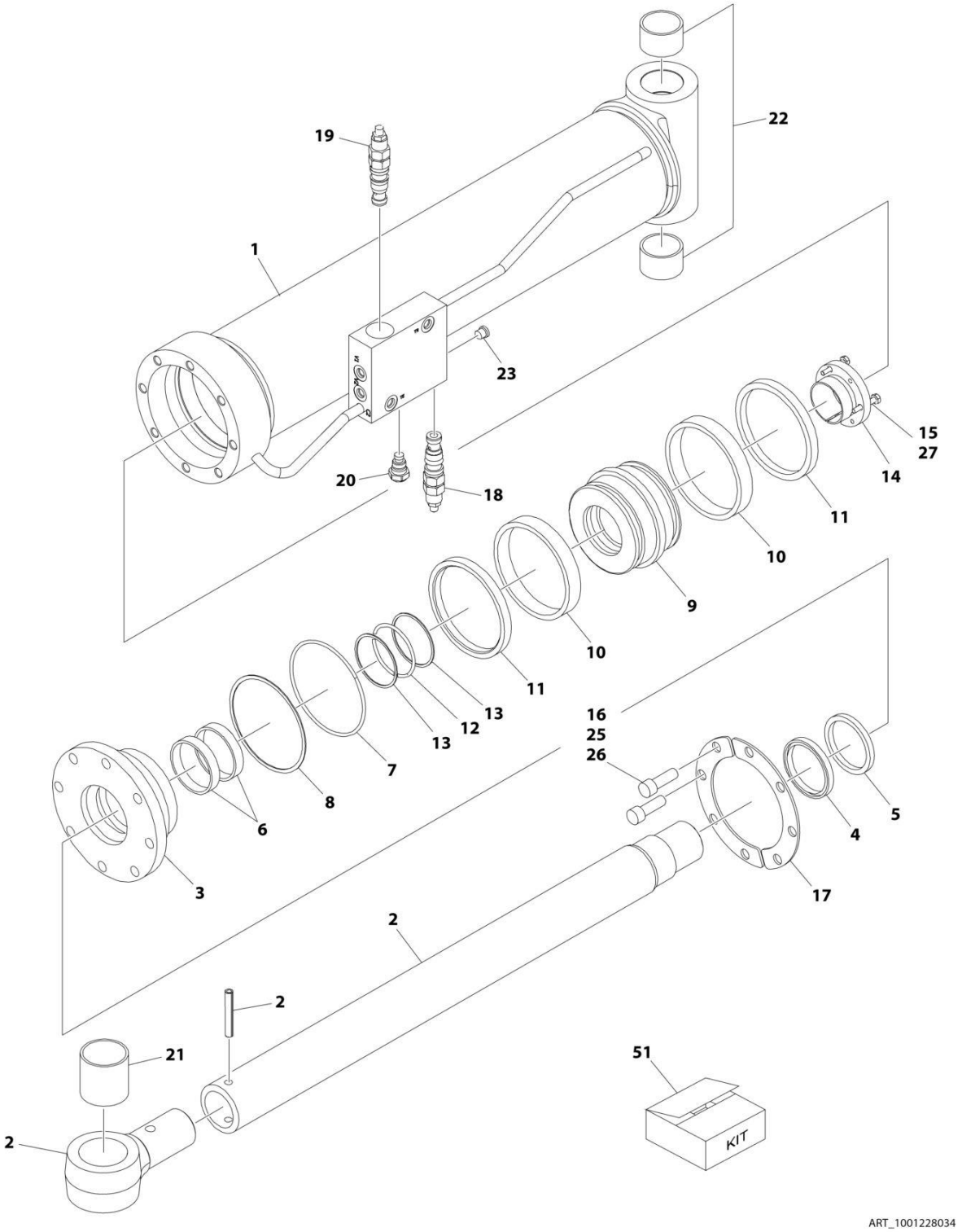

FIGURE 6-4. PLATFORM LEVEL CYLINDER ASSEMBLY - WITHOUT COLD WEATHER PLUS PACKAGE

ITEM	PART NUMBER	QTY	DESCRIPTION	REV
	1001228034	Ref	PLATFORM LEVEL CYLINDER ASSEMBLY	E
		Ref	Note: Original Cylinder May Have Been Replaced with Service Replacement. Identify PN Stamped on Cylinder Before Ordering Parts.	
1	See Note	NSS	Barrel (Note: Not Available for Purchase)	
2	70006496	1	Rod	
3	70006495	1	Head	
4	See Note	NSS	Wiper, Rod (Note: Use Item 51)	
5	See Note	NSS	Seal, Rod (Note: Use Item 51)	
6	See Note	NSS	Ring, Wear (Note: Use Item 51)	
7	See Note	NSS	O-Ring (Note: Use Item 51)	
8	See Note	NSS	Ring, Back-up (Note: Use Item 51)	
9	70006494	1	Piston	
10	See Note	NSS	Ring, Guide (Note: Use Item 51)	
11	See Note	NSS	Ring, Lock (Note: Use Item 51)	
12	See Note	NSS	O-Ring (Note: Use Item 51)	
13	See Note	NSS	Ring, Back-up (Note: Use Item 51)	
14	0961897	1	Bushing, Tapered	
15	0630535	3	Capscrew 1/4 x 1-1/8	
16	3931824	8	Capscrew 1/2 x 1-1/2	
17	70007049	1	Ring, Washer	
18	4641386	1	Cartridge, Holding Valve (Vented)	
18	7011376	1	Seal Kit - 4641386 Cartridge (1 Per Cartridge)	
19	4641393	1	Cartridge, Holding Valve (Vented)	
19	7011376	1	Seal Kit - 4641393 Cartridge (1 Per Cartridge)	
20	4641388	1	Cartridge, Holding Valve	
20	7011353	1	Seal Kit - 4641388 Cartridge (1 Per Cartridge)	
21	0962561	1	Bushing	
22	0961949	2	Bushing	
23	2220883	5	Plug, O-Ring	
24	2220886	AR	Plug, O-Ring	
25	0100011	AR	Compound, Locking	
26	0100038	AR	Primer, Locking	
27	0100019	AR	Compound, Locking	
51	2902285	1	Seal Kit (Includes Items 4-8 & 10-13)	

FIGURE 6-5. LIFT CYLINDER ASSEMBLY - MAIN BOOM

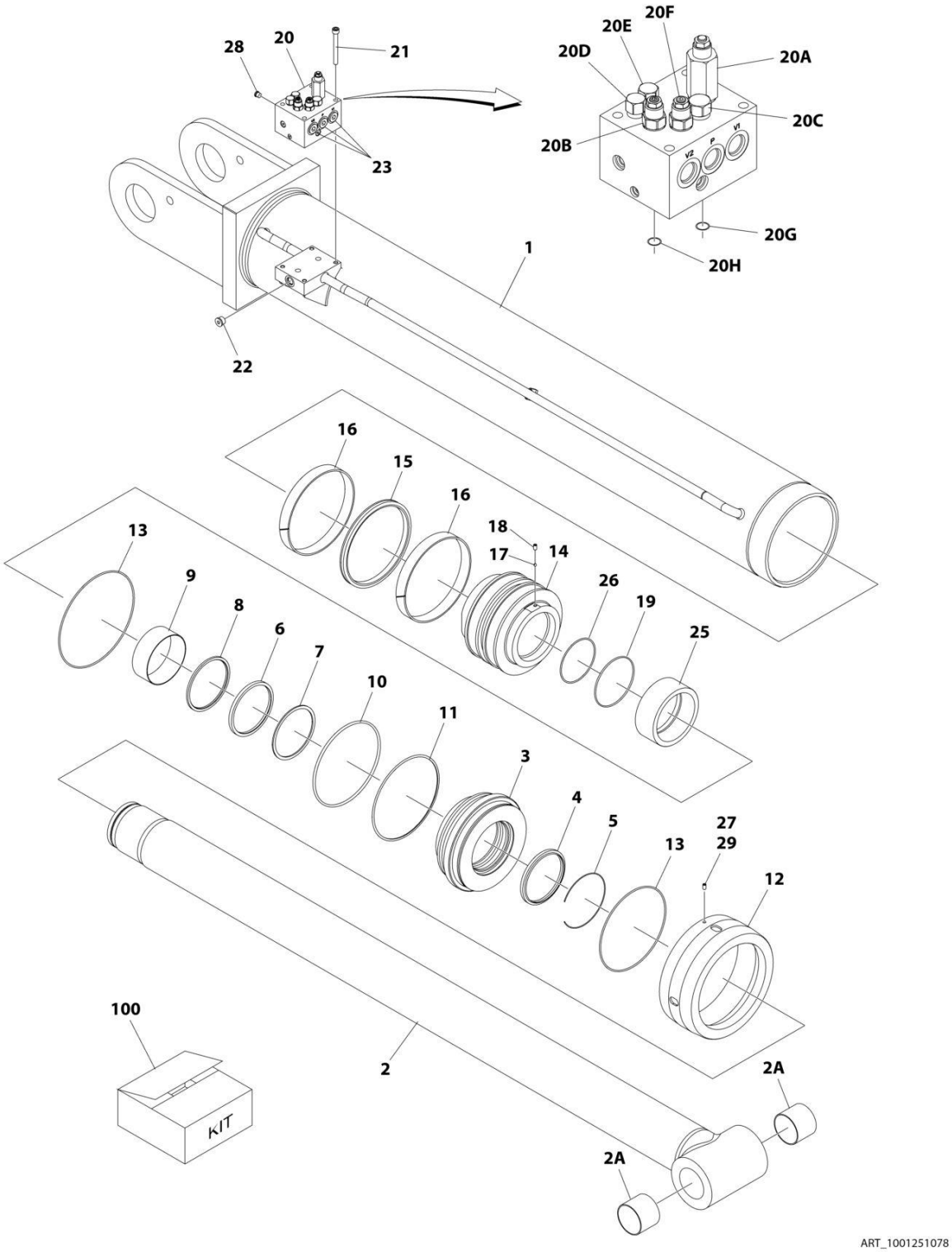

FIGURE 6-5. LIFT CYLINDER ASSEMBLY - MAIN BOOM

ITEM	PART NUMBER	QTY	DESCRIPTION	REV
	1001251078	Ref	LIFT CYLINDER ASSEMBLY - MAIN BOOM	B
		Ref	Note: Original Cylinder May Have Been Replaced with Service Replacement. Identify PN Stamped on Cylinder Before Ordering Parts.	
1	See Note	NSS	Barrel (Note: Not Available for Purchase)	
2	70007431	1	Rod	
2A	0962297	2	Bushing	
3	70007432	1	Head	
4	See Note	NSS	Ring, Wiper (Note: Use Item 100)	
5	70007433	1	Ring, Retaining	
6	See Note	NSS	Seal, Rod (Note: Use Item 100)	
7	See Note	NSS	Ring, Back-up (Note: Use Item 100)	
8	See Note	NSS	O-Ring (Note: Use Item 100)	
9	70007434	1	Ring, Wear	
10	See Note	NSS	O-Ring (Note: Use Item 100)	
11	See Note	NSS	Ring, Back-up (Note: Use Item 100)	
12	70007435	1	Cap, Cylinder	
13	See Note	NSS	O-Ring (Note: Use Item 100)	
14	70007436	1	Piston	
15	See Note	NSS	Seal, Piston (Note: Use Item 100)	
16	See Note	NSS	Ring, Wear (Note: Use Item 100)	
17	70022564	1	Ball, Steel	
18	70029468	1	Setscrew	
19	See Note	NSS	O-Ring (Note: Use Item 100)	
20	4641370	1	Valve Block Assembly	A
20A	4641340	NLA	Cartridge, Valve (Use p/n 1001251329)	
20A	7011367	1	Seal Kit - 4641340 Cartridge Valve	
20B	4640938	1	Cartridge, Valve	
20B	2900770	1	Seal Kit - 4640938 Cartridge Valve	
20C	7011362	1	Cartridge, Valve	
20C	7011311	1	Seal Kit - 7011362 Cartridge Valve	
20D	7011365	1	Cartridge, Valve	
20D	7011346	1	Seal Kit - 7011365 Cartridge Valve	
20E	7011364	1	Cartridge, Valve	
20E	7011346	1	Seal Kit - 7011364 Cartridge Valve	
20F	7011375	1	Cartridge, Valve	
20F	2900770	1	Seal Kit - 7011375 Cartridge Valve	
20G	70000777	1	O-Ring	
20H	70000778	1	O-Ring	
21	70006927	4	Capscrew M8	
22	2220886	1	Plug, O-Ring	
23	70005433	3	Plug, O-Ring	
25	70007437	1	Spacer	
26	See Note	NSS	O-Ring (Note: Use Item 100)	
27	70007282	1	Insert, Locking	
28	2220883	1	Plug, O-Ring	
29	70007438	1	Setscrew	
100	70007439	1	Seal Kit (Includes Items 101-110)	

FIGURE 6-6. LIFT CYLINDER ASSEMBLY - TOWER BOOM

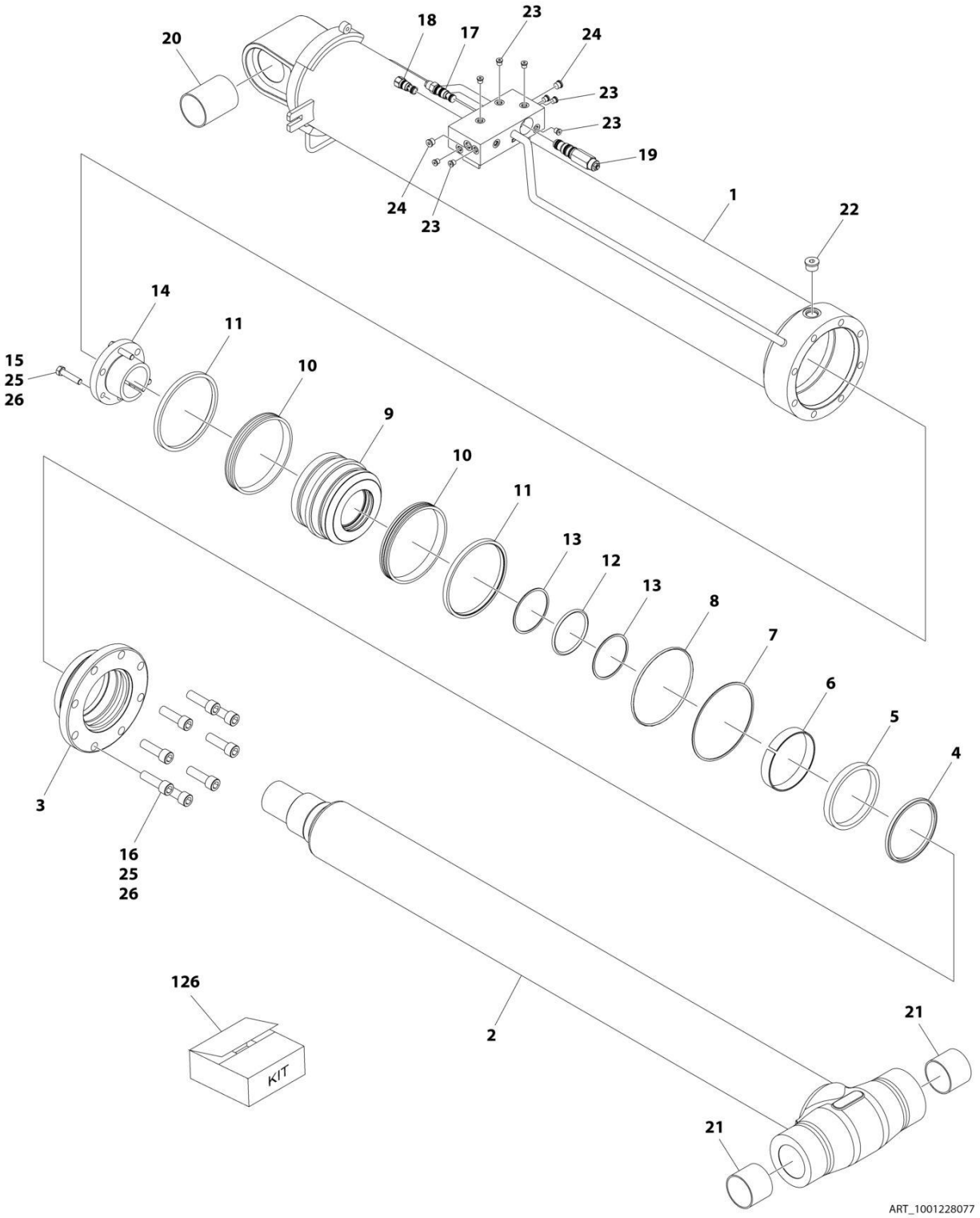

FIGURE 6-6. LIFT CYLINDER ASSEMBLY - TOWER BOOM

ITEM	PART NUMBER	QTY	DESCRIPTION	REV
	1001228077	Ref	LIFT CYLINDER ASSEMBLY - TOWER BOOM	C
		Ref	Note: Original Cylinder May Have Been Replaced with Service Replacement. Identify PN Stamped on Cylinder Before Ordering Parts.	
1	See Note	NSS	Barrel (Note: Not Available for Purchase)	
2	70006509	1	Rod	
3	70006508	1	Head	
4	See Note	NSS	Ring, Wiper (Note: Use Item 126)	
5	See Note	NSS	Seal, Rod (Note: Use Item 126)	
6	See Note	NSS	Ring, Wear (Note: Use Item 126)	
7	See Note	NSS	O-Ring (Note: Use Item 126)	
8	See Note	NSS	Ring, Back-up (Note: Use Item 126)	
9	70006507	1	Piston	
10	See Note	NSS	Ring, Hydrolock (Note: Use Item 126)	
11	See Note	NSS	Ring, Lock (Note: Use Item 126)	
12	See Note	NSS	O-Ring (Note: Use Item 126)	
13	See Note	NSS	Ring, Back-up (Note: Use Item 126)	
14	0961901	1	Bushing, Tapered	
15	0630537	3	Capscrew	
16	3932240	8	Capscrew 3/4 x 2-1/2	
17	1001120140	1	Cartridge, Valve	
17	2900770	1	Seal Kit - 1001120140 Cartridge Valve	
18	4641285	1	Cartridge, Valve	
18	7011311	1	Seal Kit - 4641285 Cartridge Valve	
19	1001120141	1	Cartridge, Valve	
19	7011367	1	Seal Kit - 1001120141 Cartridge Valve	
20	0962552	1	Bushing	
21	0962297	2	Bushing	
22	2220888	1	Plug, O-Ring	
23	2220883	9	Plug, O-Ring	
24	2220885	2	Plug, O-Ring	
25	0100011	AR	Compound, Locking	
26	0100038	AR	Primer, Locking	
126	1001118762	1	Seal Kit (Includes Items 4-8 & 10-13)	

FIGURE 6-7. JIB CYLINDER ASSEMBLY (Prior to SN 0300293914, Except SN 0300285459 through 0300285462, Except SN 0300285780 through 0300285783, Except SN 0300289542 through 0300289544, Except SN 0300289548 through 0300289549, Except SN 0300289565 through 0300289568, Except SN 0300289596 through 0300289567, Except SN 0300290457 through 0300290458, Excluding 0300289527, 0300289551, 0300289589, 0300289601 and 0300289604)

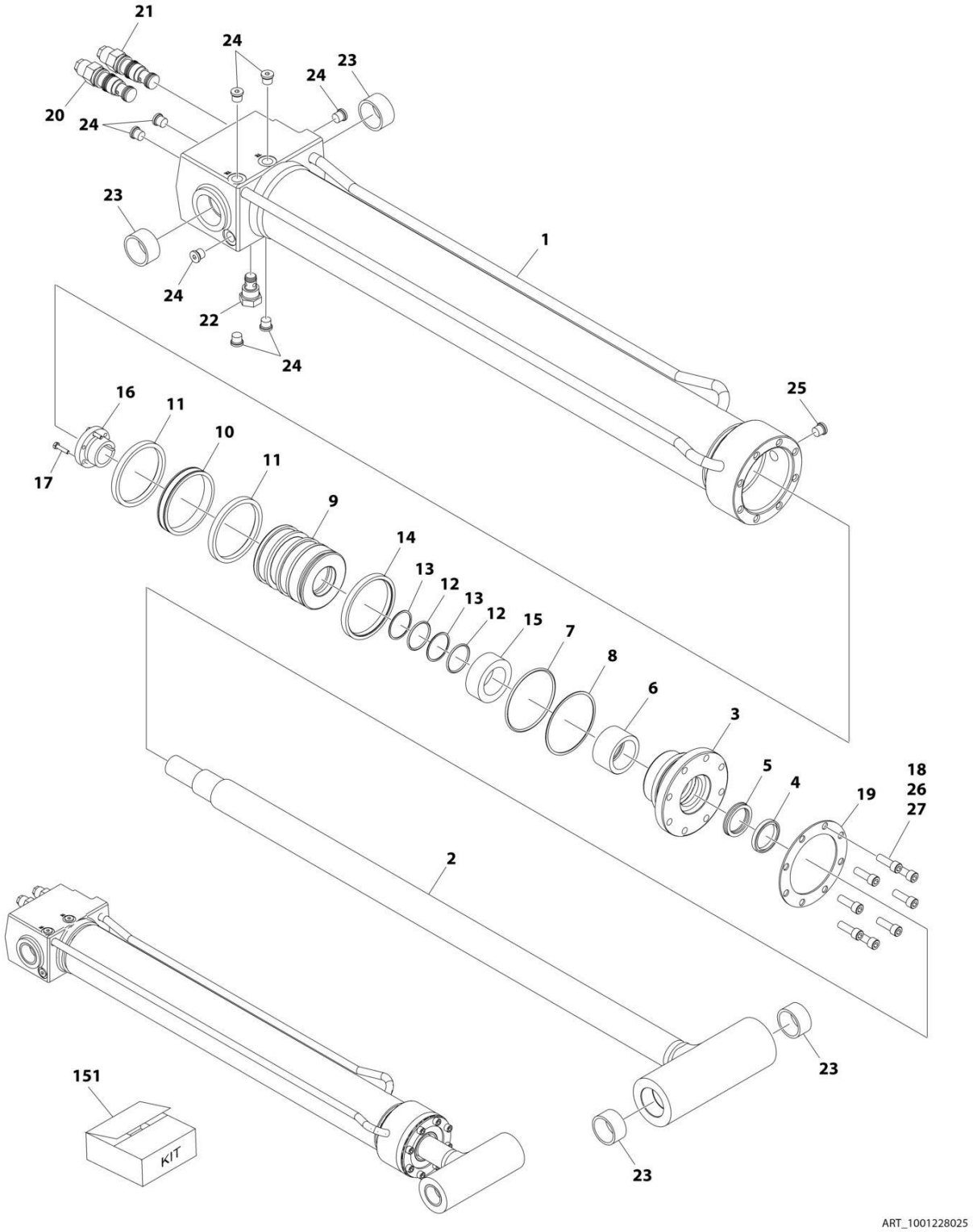

FIGURE 6-7. JIB CYLINDER ASSEMBLY (Prior to SN 0300293914, Except SN 0300285459 through 0300285462, Except SN 0300285780 through 0300285783, Except SN 0300289542 through 0300289544, Except SN 0300289548 through 0300289549, Except SN 0300289565 through 0300289568, Except SN 0300289596 through 0300289567, Except SN 0300290457 through 0300290458, Excluding 0300289527, 0300289551, 0300289589, 0300289601 and 0300289604)

ITEM	PART NUMBER	QTY	DESCRIPTION	REV
	1001228025	Ref	JIB CYLINDER ASSEMBLY	G
		Ref	Note: Original Cylinder May Have Been Replaced with Service Replacement. Identify PN Stamped on Cylinder Before Ordering Parts.	
1	See Note	NSS	Barrel (Note: Not Available for Purchase)	
2	70006526	1	Rod	
3	70006525	1	Head	
4	See Note	NSS	Wiper, Rod (Note: Use Item 151)	
5	See Note	NSS	Seal (Note: Use Item 151)	
6	See Note	NSS	Ring, Wear (Note: Use Item 151)	
7	See Note	NSS	O-Ring (Note: Use Item 151)	
8	See Note	NSS	Ring, Back-up (Note: Use Item 151)	
9	70006524	1	Piston	
10	See Note	NSS	Seal (Note: Use Item 151)	
11	See Note	NSS	Ring, Wear (Note: Use Item 151)	
12	See Note	NSS	O-Ring (Note: Use Item 151)	
13	See Note	NSS	Ring, Back-up (Note: Use Item 151)	
14	See Note	NSS	Seal (Note: Use Item 151)	
15	70006523	1	Spacer	
16	0961893	1	Bushing, Tapered	
17	0630534	3	Capscrew #10 x 1	
18	3931516	8	Capscrew 5/16 x 1	
19	3760368	1	Ring, Washer	
20	4641260	1	Cartridge, Counterbalance (Port above V1)	
20	2900770	1	Seal Kit - 4641260 Cartridge Valve (1 Per Valve)	
21	4640452	1	Cartridge, Counterbalance (Port above V2)	
21	2900770	1	Seal Kit - 4640452 Cartridge Valve (1 Per Valve)	
22	4641114	1	Cartridge, Restricted/Check	
22	7012967	1	Seal Kit - 4641114 Cartridge Valve (1 Per Valve)	
23	0962257	4	Bushing	
24	2220883	8	Plug, O-Ring	
25	2220885	AR	Plug, O-Ring	
26	0100011	AR	Compound, Locking	
27	0100038	AR	Primer, Locking	
151	1001138805	1	Seal Kit (Includes Items 4-8 & 10-14)	

FIGURE 6-8. JIB CYLINDER ASSEMBLY (SN 0300293914 to Present)

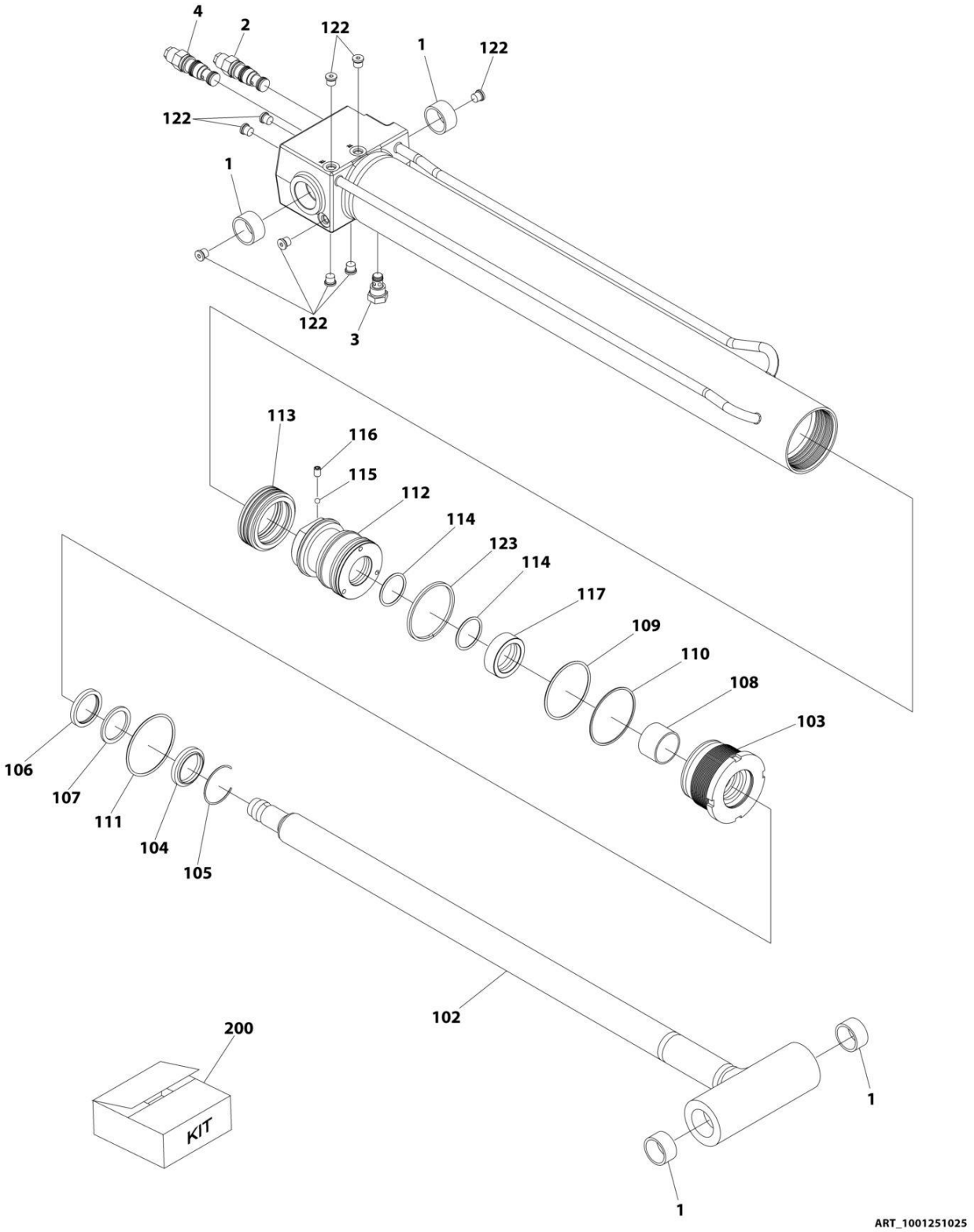

FIGURE 6-8. JIB CYLINDER ASSEMBLY (SN 0300293914 to Present)

ITEM	PART NUMBER	QTY	DESCRIPTION	REV
	1001251025	Ref	JIB CYLINDER ASSEMBLY	A
		Ref	Note: Original Cylinder May Have Been Replaced with Service Replacement. Identify PN Stamped on Cylinder Before Ordering Parts.	
1	0962257	4	Bushing	
2	4640452	1	Valve, Counterbalance	
2	2900770	1	Seal Kit - For 4640452 Counterbalance Valve	
3	4641114	1	Valve, Check	
3	7012998	1	Seal Kit - For 4641114 Check Valve	
4	4641260	1	Valve, Counterbalance	
4	2900770	1	Seal Kit - For 4641260 Counterbalance Valve	
102	70007993	1	Rod	
103	70007994	1	Head	
104	See Note	NSS	Wiper (Note: Use Item 200)	
105	70002373	1	Ring, Retaining	
106	See Note	NSS	Seal (Note: Use Item 200)	
107	See Note	NSS	Ring (Note: Use Item 200)	
108	70005143	1	Bearing	
109	See Note	NSS	O-Ring (Note: Use Item 200)	
110	See Note	NSS	Ring (Note: Use Item 200)	
111	See Note	NSS	O-Ring (Note: Use Item 200)	
112	70007995	1	Piston	
113	See Note	NSS	Seal (Note: Use Item 200)	
114	See Note	NSS	O-Ring (Note: Use Item 200)	
115	70022564	1	Ball, Steel	
116	70006596	1	Setscrew M8 x 1-1/4	
117	70007996	1	Spacer	
122	2220883	9	Plug	
123	70007997	1	Ring	
200	70007998	1	Seal Kit (Includes Items 104, 106, 107, 109-111, 113 & 114)	

FIGURE 6-9. STEER CYLINDER ASSEMBLY (Prior to SN 0300293914, Except SN 0300285459 through 0300285462, Except SN 0300285780 through 0300285783, Except SN 0300289542 through 0300289544, Except SN 0300289548 through 0300289549, Except SN 0300289565 through 0300289568, Except SN 0300289596 through 0300289567, Except SN 0300290457 through 0300290458, Excluding 0300289527, 0300289551, 0300289589, 0300289601 and 0300289604)

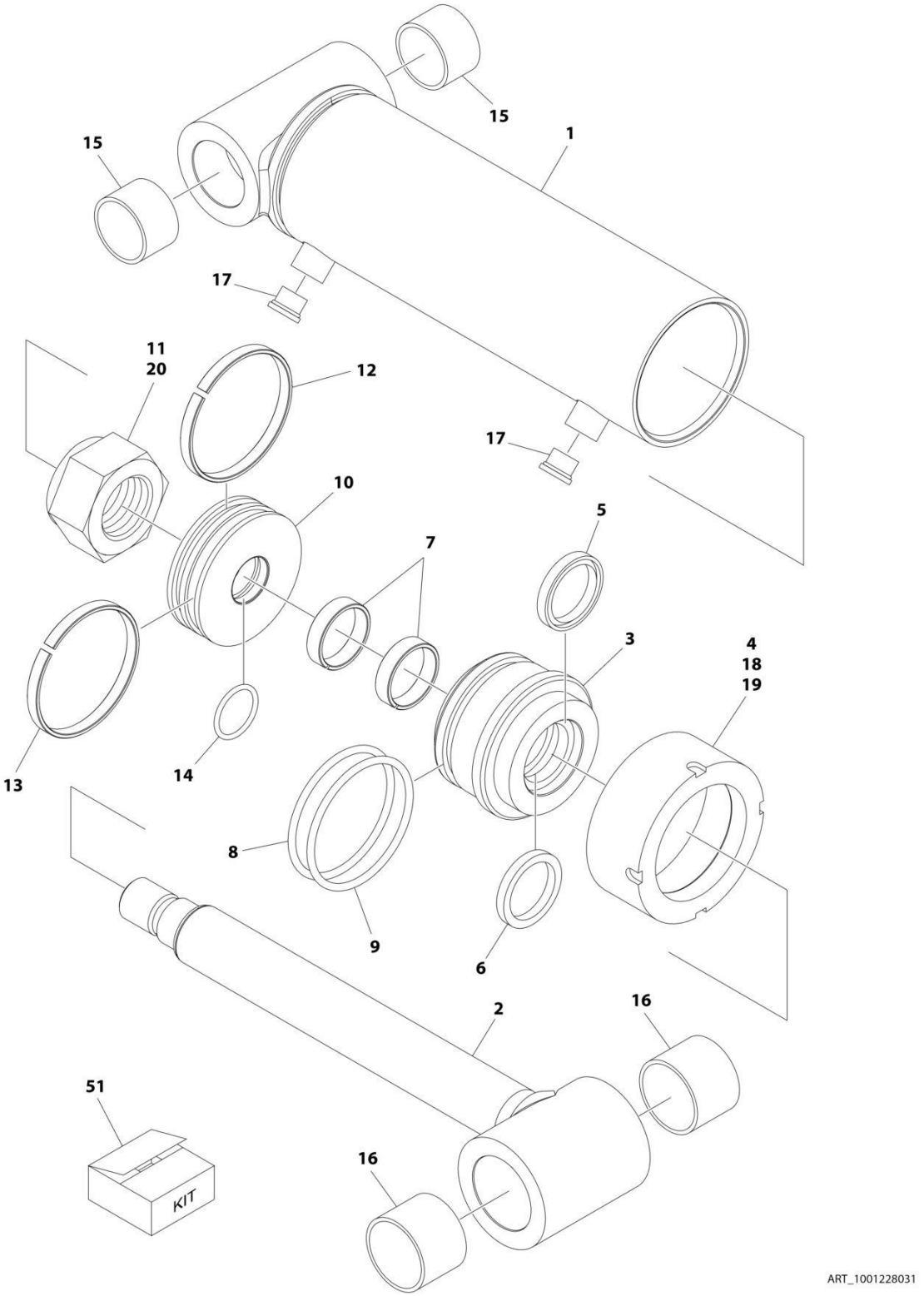

FIGURE 6-9. STEER CYLINDER ASSEMBLY (Prior to SN 0300293914, Except SN 0300285459 through 0300285462, Except SN 0300285780 through 0300285783, Except SN 0300289542 through 0300289544, Except SN 0300289548 through 0300289549, Except SN 0300289565 through 0300289568, Except SN 0300289596 through 0300289567, Except SN 0300290457 through 0300290458, Excluding 0300289527, 0300289551, 0300289589, 0300289601 and 0300289604)

ITEM	PART NUMBER	QTY	DESCRIPTION	REV
	1001228031	Ref	STEER CYLINDER ASSEMBLY	C
		Ref	Note: Original Cylinder May Have Been Replaced with Service Replacement. Identify PN Stamped on Cylinder Before Ordering Parts.	
1	See Note	NSS	Barrel (Note: Not Available for Purchase)	
2	70006493	1	Rod	
3	70006492	1	Head	
4	70006491	1	Cap, Cylinder	
5	See Note	NSS	Wiper (Note: Use Item 51)	
6	See Note	NSS	Seal, Piston (Note: Use Item 51)	
7	See Note	NSS	Ring, Wear (Note: Use Item 51)	
8	See Note	NSS	O-Ring (Note: Use Item 51)	
9	See Note	NSS	Ring, Back-up (Note: Use Item 51)	
10	70006490	1	Piston	
11	3300465	1	Nut	
12	See Note	1	Seal (Note: Use Item 51)	
13	See Note	1	Ring, Wear (Note: Use Item 51)	
14	See Note	1	O-Ring (Note: Use Item 51)	
15	0961949	2	Bushing	
16	0961950	2	Bushing	
17	2220885	2	Plug (With O-Ring)	
18	0100011	AR	Compound, Locking	
19	0100038	AR	Primer, Locking	
20	0100019	AR	Compound, Locking	
51	2902257	1	Seal Kit (Includes Items 5-9 & 12-14)	

FIGURE 6-10. STEER CYLINDER ASSEMBLY (SN 0300293914 to Present)

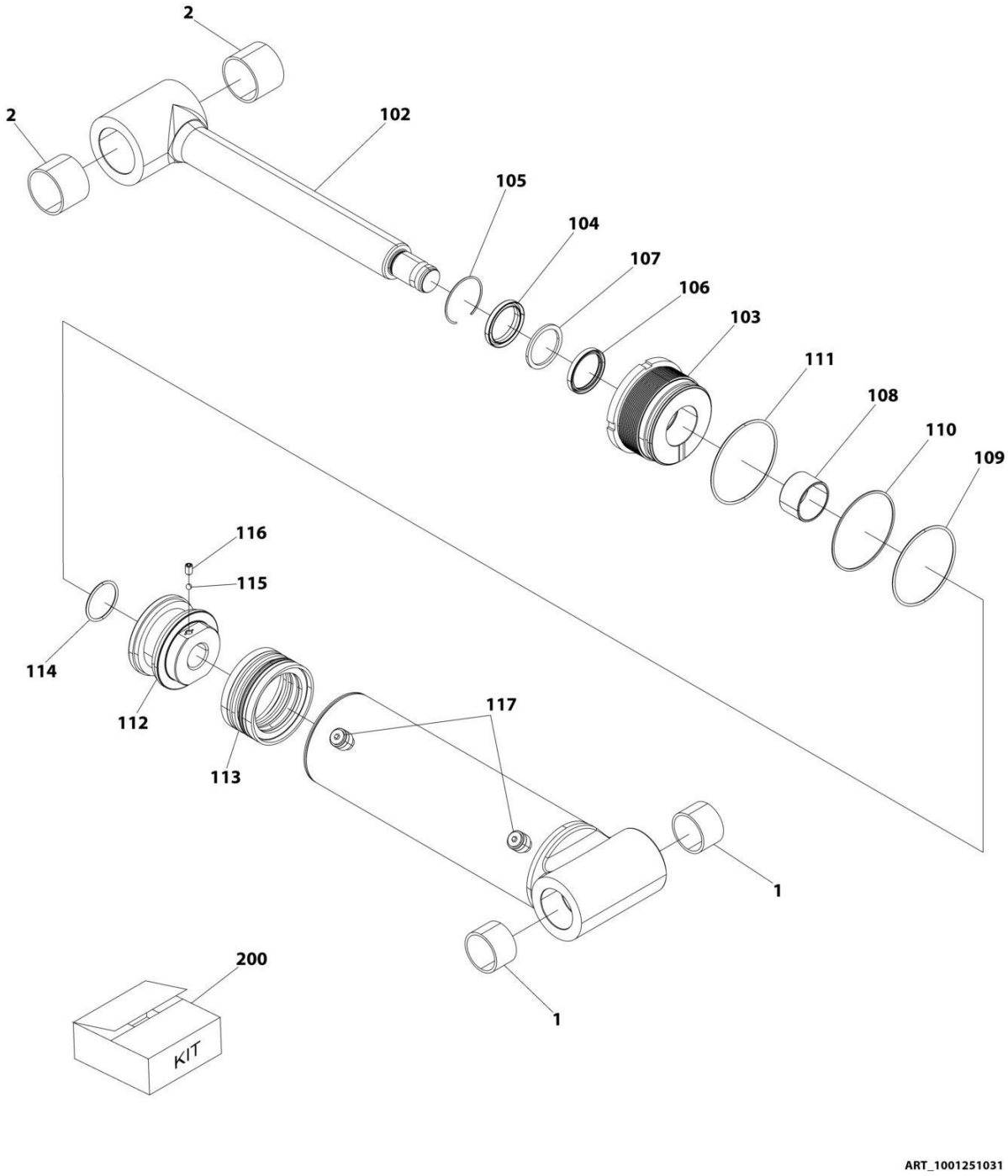

FIGURE 6-10. STEER CYLINDER ASSEMBLY (SN 0300293914 to Present)

ITEM	PART NUMBER	QTY	DESCRIPTION	REV
	1001251031	Ref	STEER CYLINDER ASSEMBLY	A
		Ref	Note: Original Cylinder May Have Been Replaced with Service Replacement. Identify PN Stamped on Cylinder Before Ordering Parts.	
1	0961949	2	Bushing	
2	0961950	2	Bushing	
102	70008004	1	Rod	
103	70008005	1	Head	
104	See Note	NSS	Wiper (Note: Use Item 200)	
105	70002410	1	Ring, Retaining	
106	See Note	NSS	Seal (Note: Use Item 200)	
107	See Note	NSS	Ring (Note: Use Item 200)	
108	70004237	1	Bearing	
109	See Note	NSS	O-Ring (Note: Use Item 200)	
110	See Note	NSS	Ring (Note: Use Item 200)	
111	See Note	NSS	O-Ring (Note: Use Item 200)	
112	70008006	1	Piston	
113	See Note	NSS	Seal (Note: Use Item 200)	
114	See Note	NSS	O-Ring (Note: Use Item 200)	
115	70022564	1	Ball, Steel	
116	70006596	1	Setscrew M8 x 1-1/4	
117	2220885	2	Plug	
200	70008007	1	Seal Kit (Includes Items 104, 106, 107, 109-111, 113 & 114)	

FIGURE 6-11. TELESCOPE CYLINDER ASSEMBLY - MAIN BOOM

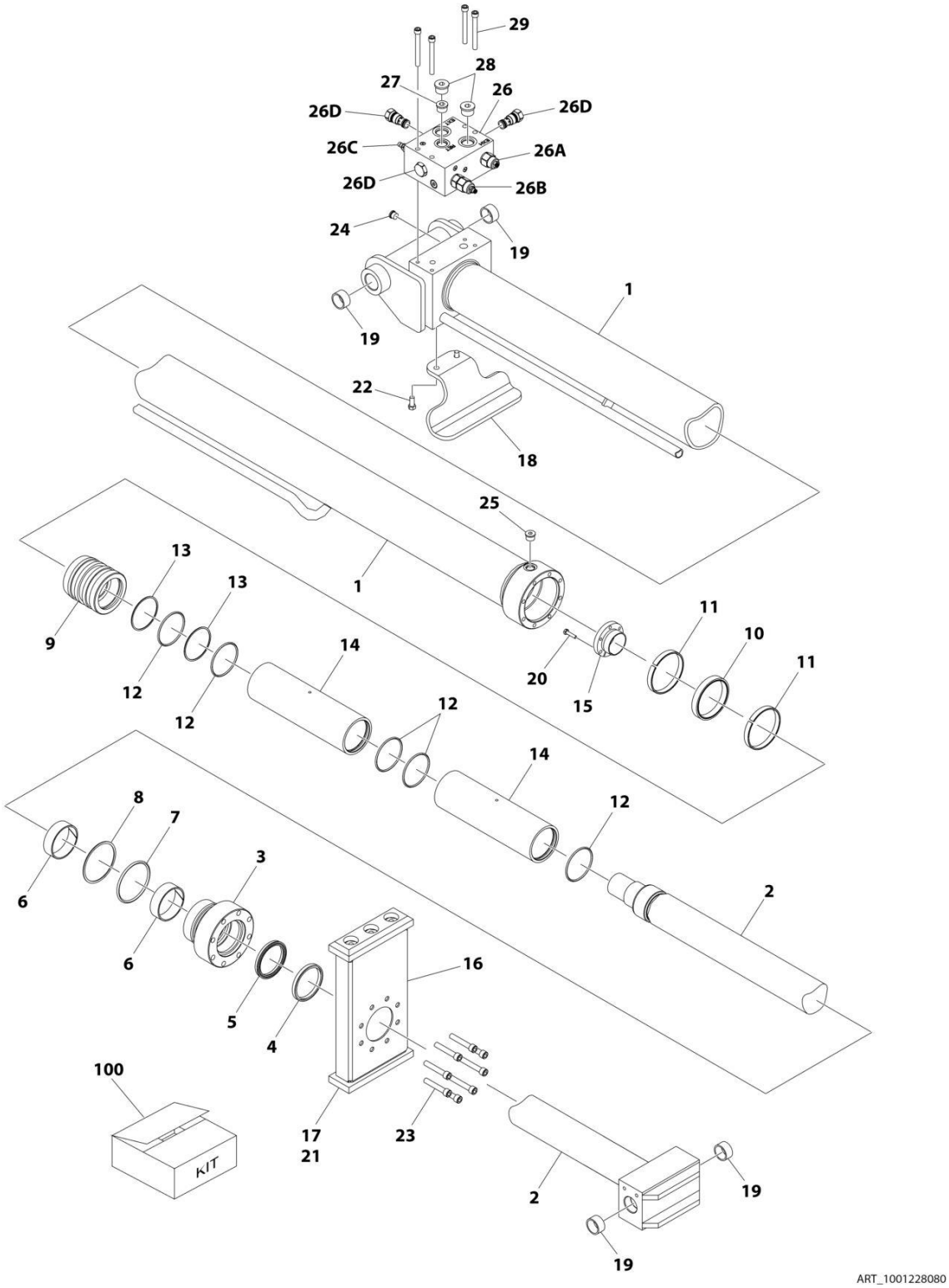

FIGURE 6-11. TELESCOPE CYLINDER ASSEMBLY - MAIN BOOM

ITEM	PART NUMBER	QTY	DESCRIPTION	REV
	1001228080	Ref	TELESCOPE CYLINDER ASSEMBLY - MAIN BOOM	D
		Ref	Note: Original Cylinder May Have Been Replaced with Service Replacement. Identify PN Stamped on Cylinder Before Ordering Parts.	
1	See Note	NSS	Barrel (Note: Not Available for Purchase)	
2	70006693	1	Rod	
3	70006694	1	Head	
4	See Note	NSS	Wiper (Note: Use Item 100)	
5	See Note	NSS	Seal, Rod (Note: Use Item 100)	
6	See Note	NSS	Ring, Wear (Note: Use Item 100)	
7	See Note	NSS	O-Ring (Note: Use Item 100)	
8	See Note	NSS	Ring, Back-up (Note: Use Item 100)	
9	70006695	1	Piston	
10	See Note	NSS	Seal (Note: Use Item 100)	
11	See Note	NSS	Ring, Wear (Note: Use Item 100)	
12	See Note	NSS	O-Ring (Note: Use Item 100)	
13	See Note	NSS	Ring, Back-up (Note: Use Item 100)	
14	70006696	1	Spacer	
15	0961897	1	Bushing, Tapered	
16	3574580	1	Plate, Wear Pad Mount	
17	3340982	2	Pad, Wear	
18	3574586	1	Plate, Tele Foot	
19	0962257	4	Bushing	
20	0630535	3	Capscrew 1/4 x 1-1/8	
21	0641606	6	Bolt 3/8 x 3/4	
22	0641607	2	Bolt 3/8 x 7/8	
23	3931740	8	Capscrew 7/16 x 2-1/2	
24	2220885	1	Plug, O-Ring	
25	2220886	1	Plug, O-Ring	
26	4641288	1	Valve Assembly	
26A	7011372	1	Cartridge	
26A	2900789	1	Seal Kit - 7011372 Cartridge Valve	
26B	7011370	1	Cartridge	
26B	7011371	1	Seal Kit - 7011370 Cartridge Valve	
26C	7011369	1	Cartridge	
26C	7011311	1	Seal Kit - 7011369 Cartridge Valve	
26D	7011368	3	Cartridge	
26D	7011351	3	Seal Kit - 7011368 Cartridge Valve (1 Per Cartridge)	
27	2111010	1	Fitting, Straight ORFS/ORB	
28	2111212	2	Fitting, Straight ORFS/ORB	
29	3931656	4	Capscrew 3/8 x 3-1/2	
100	1001175887	1	Seal Kit (Includes Items 4-8 & 10-13)	

FIGURE 6-12. TELESCOPE CYLINDER ASSEMBLY - TOWER BOOM

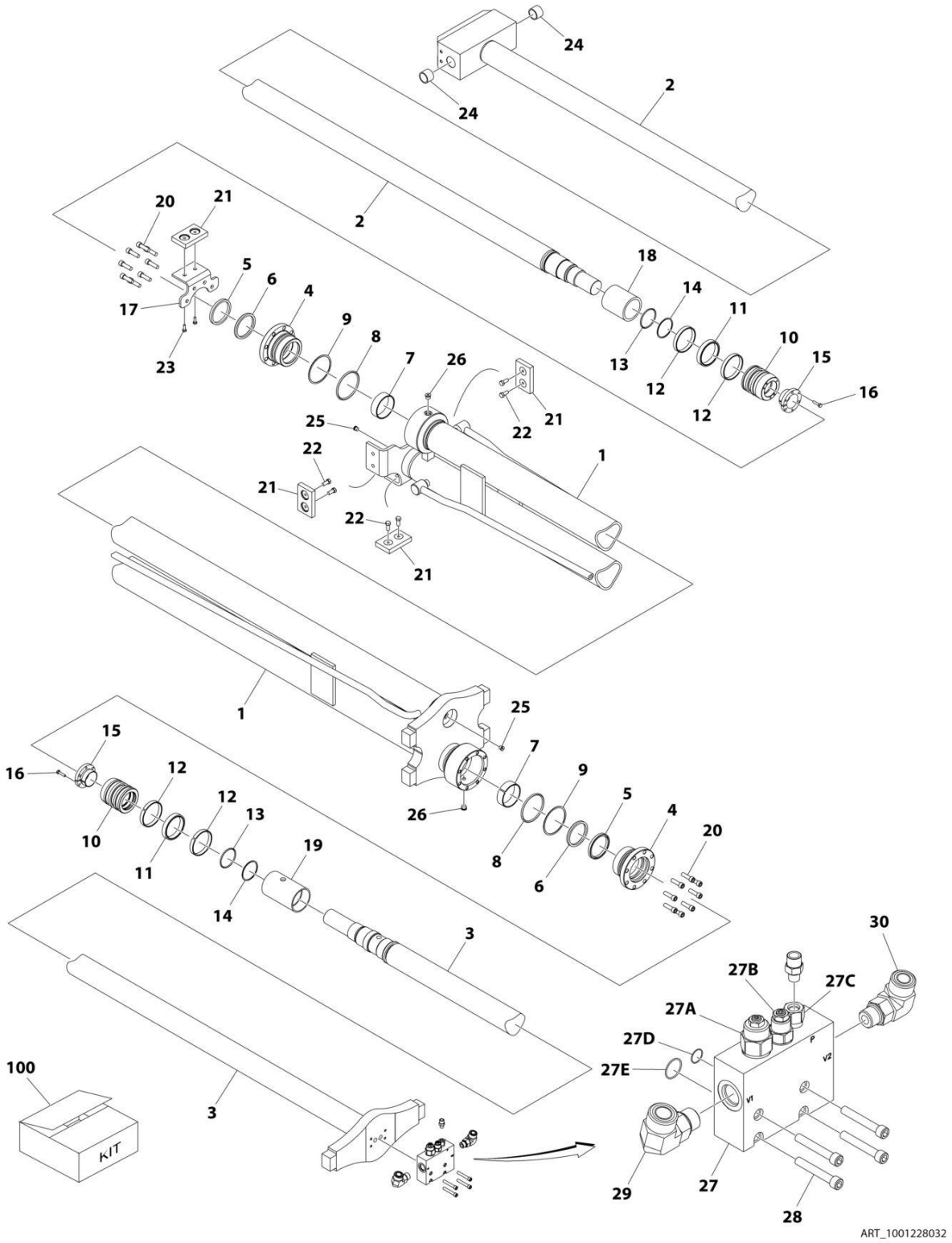

FIGURE 6-12. TELESCOPE CYLINDER ASSEMBLY - TOWER BOOM

ITEM	PART NUMBER	QTY	DESCRIPTION	REV
	1001228032	Ref	TELESCOPE CYLINDER ASSEMBLY - TOWER BOOM	C
		Ref	Note: Original Cylinder May Have Been Replaced with Service Replacement. Identify PN Stamped on Cylinder Before Ordering Parts.	
1	See Note	NSS	Barrel (Note: Not Available for Purchase)	
2	70006713	1	Rod	
3	70006714	1	Rod	
4	70006715	2	Head	
5	See Note	NSS	Wiper (Note: Use Item 100)	
6	See Note	NSS	Seal, Rod (Note: Use Item 100)	
7	See Note	NSS	Ring, Wear (Note: Use Item 100)	
8	See Note	NSS	O-Ring (Note: Use Item 100)	
9	See Note	NSS	Ring, Back-up (Note: Use Item 100)	
10	70006716	2	Piston	
11	See Note	NSS	Seal (Note: Use Item 100)	
12	See Note	NSS	Ring, Wear (Note: Use Item 100)	
13	See Note	NSS	O-Ring (Note: Use Item 100)	
14	See Note	NSS	Ring, Back-up (Note: Use Item 100)	
15	0961897	2	Bushing, Tapered	
16	0630535	6	Capscrew 1/4 x 1-1/8	
17	3574630	1	Bracket, Wear Pad Mounting	
18	70006717	1	Spacer	
19	70006718	1	Spacer	
20	3931724	16	Capscrew 7/16 x 1-1/2	
21	3340763	4	Pad, Wear	
22	0641607	6	Bolt 3/8 x 7/8	
23	0641606	2	Bolt 3/8 x 3/4	
24	0961951	2	Bushing	
25	2220883	2	Plug, O-Ring	
26	2220885	2	Plug, O-Ring	
27	4641298	1	Valve Assembly	
27A	7011359	1	Cartridge, Valve	
27A	2900789	1	Seal Kit - 7011359 Valve	
27B	4641162	1	Cartridge, Valve (was p/n 7011360)	
27B	2900770	1	Seal Kit - 7011360 & 4641162 Valve	
27C	7011361	1	Cartridge, Flow-Through Valve	
27C	7011346	1	Seal Kit - 7011361 Valve	
27D	70000778	1	O-Ring	
27E	70000777	1	O-Ring	
28	3931532	4	Capscrew 5/16 x 2	
29	2131210	1	Fitting, 90 ORFS/ORB	
30	2131008	1	Fitting, 90 ORFS/ORB	
100	2902291	2	Seal Kit (Includes Items 5-9 & 11-14)	
		Ref	Note: Two kits required to rebuild this double barreled cylinder - One kit required for each barrel of the cylinder.	

SECTION 7 - HYDRAULIC

FIGURE 7-1. HYDRAULIC DIAGRAM - BOOM (WITH REXROTH PUMPS)

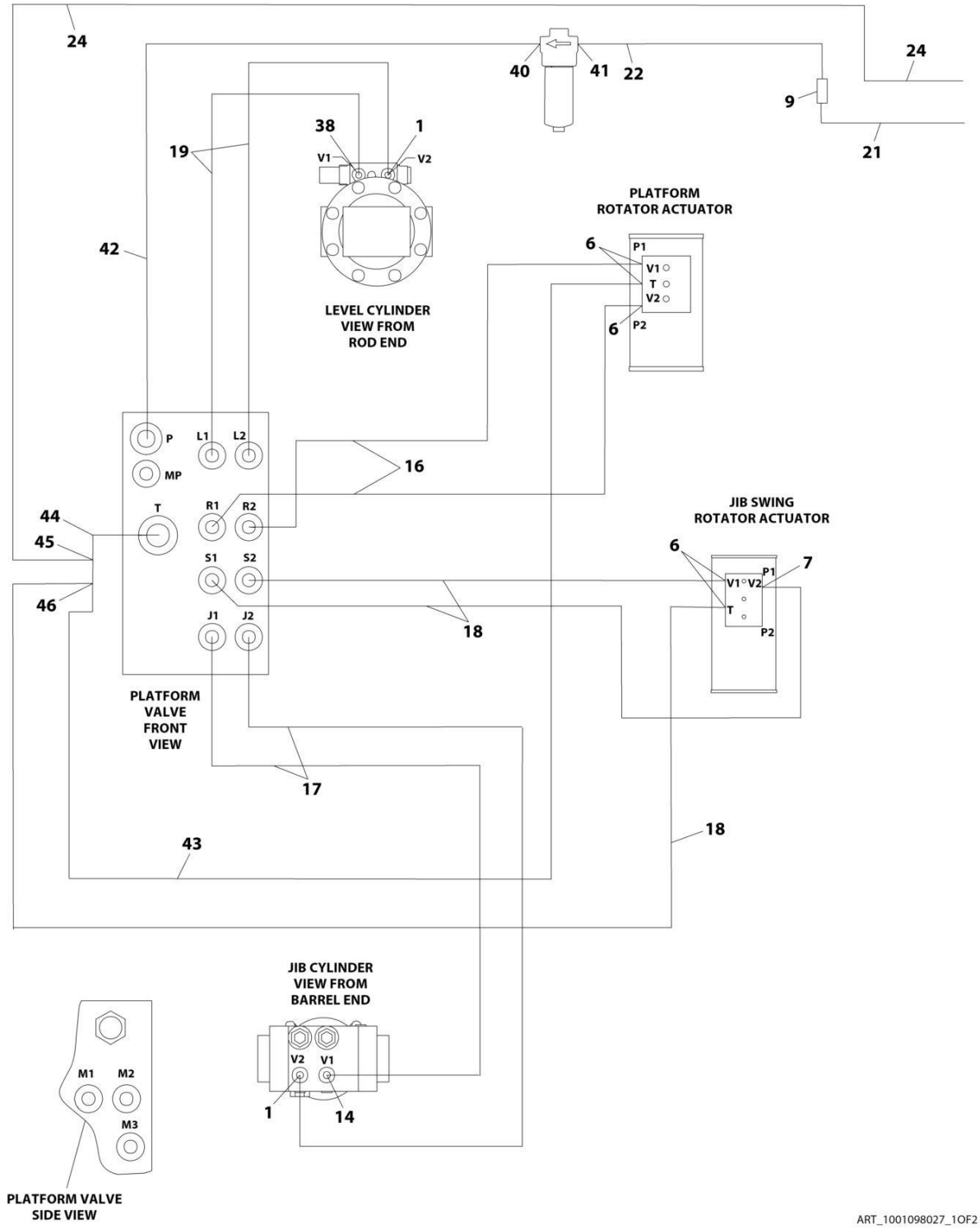

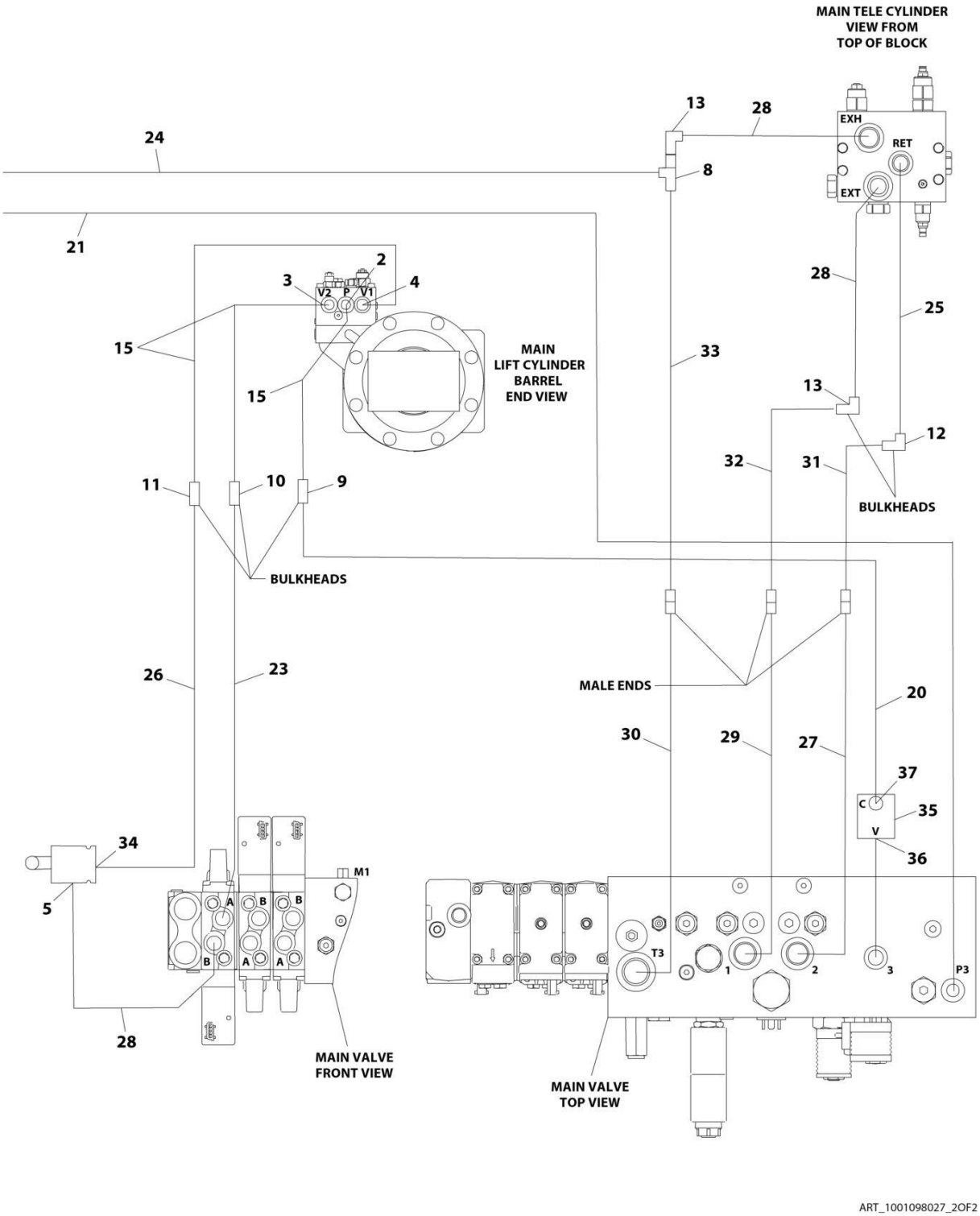
MAIN TELE CYLINDER
VIEW FROM
TOP OF BLOCK
EXH
RET
EXT
MAIN
LIFT CYLINDER
BARREL
END VIEW
BULKHEADS
BULKHEADS
MALE ENDS
MAIN VALVE
FRONT VIEW
MAIN VALVE
TOP VIEW
V2
P
V1
M1
T3
P3
ART_1001098027_2OF2

FIGURE 7-1. HYDRAULIC DIAGRAM - BOOM (WITH REXROTH PUMPS)

ITEM	PART NUMBER	QTY	DESCRIPTION	REV
	1283457	Ref	HYDRAULIC DIAGRAM - BOOM (WITH REXROTH PUMPS)	L
	1001098027	Ref	Hydraulic Diagram - Tower/Upper Boom	B
1	2110404	2	Fitting, Straight ORFS/ORB	
2	2110610	1	Fitting, Straight ORFS/ORB	
3	2110810	1	Fitting, Straight ORFS/ORB	
4	2111010	1	Fitting, Straight ORFS/ORB	
5	2111212	1	Fitting, Straight ORFS/ORB	
6	2150404	5	Fitting, 45 ORFS/ORB	
7	2170204	1	Fitting, 90 ORFS/ORB	
8	2170712	1	Fitting, Tee ORFS/FSORFS/ORFS	
9	2171306	2	Fitting, 45 ORFS/ORB	
10	2171308	1	Fitting, 45 ORFS/ORB	
11	2171310	1	Fitting, 45 ORFS/ORB	
12	2171210	1	Fitting, 90 ORFS/ORB	
13	2171212	2	Fitting, 90 ORFS/ORB	
14	2180830	1	Fitting, Straight ORFS/ORB	
15	2720516	1	Hose	
16	2753545	2	Hose	
17	2753717	2	Hose	
18	2753716	3	Hose	
19	2753897	2	Hose	
20	2753978	1	Hose	
21	2754123	1	Hose	
22	2754124	1	Hose	
23	2753985	1	Hose	
24	2753986	1	Hose	
25	2753987	1	Hose	
26	2753994	1	Hose	
27	2753993	1	Hose	
28	2753998	3	Hose	
29	2754002	1	Hose	
30	2754003	1	Hose	
31	2754010	1	Hose	
32	2754011	1	Hose	
33	2753999	1	Hose	
34	2111012	1	Fitting, Straight ORFS/ORB	
35	4641372	1	Valve, Double Check	
35	7027284	1	Cartridge	
35	7011346	1	Seal Kit - 7027284 Cartridge	
35	7027285	1	Cartridge	
35	7011311	1	Seal Kit - 7027285 Cartridge	
36	2221123	1	Fitting, Straight S FSORFS/ORB	
37	2130606	1	Fitting, 90 ORFS/ORB	
38	2180830	1	Fitting, Straight ORFS/ORB	
40	2110612	1	Fitting, Straight ORFS/ORB	
41	2130612	1	Fitting, 90 ORFS/ORB	
42	2717059	1	Hose	
43	2754288	1	Hose	
44	2170708	1	Fitting, Swivel Nut Run Tee ORFS/FSORFS/ORFS	
45	1001097820	1	Fitting, Adapter ORFS/FSORFS	

ITEM	PART NUMBER	QTY	DESCRIPTION	REV
46	2170704	1	Fitting, Swivel Nut Run Tee ORFS/FSORFS/ORFS	

FIGURE 7-2. HYDRAULIC DIAGRAM - BOOM (WITH SAUER PUMPS)

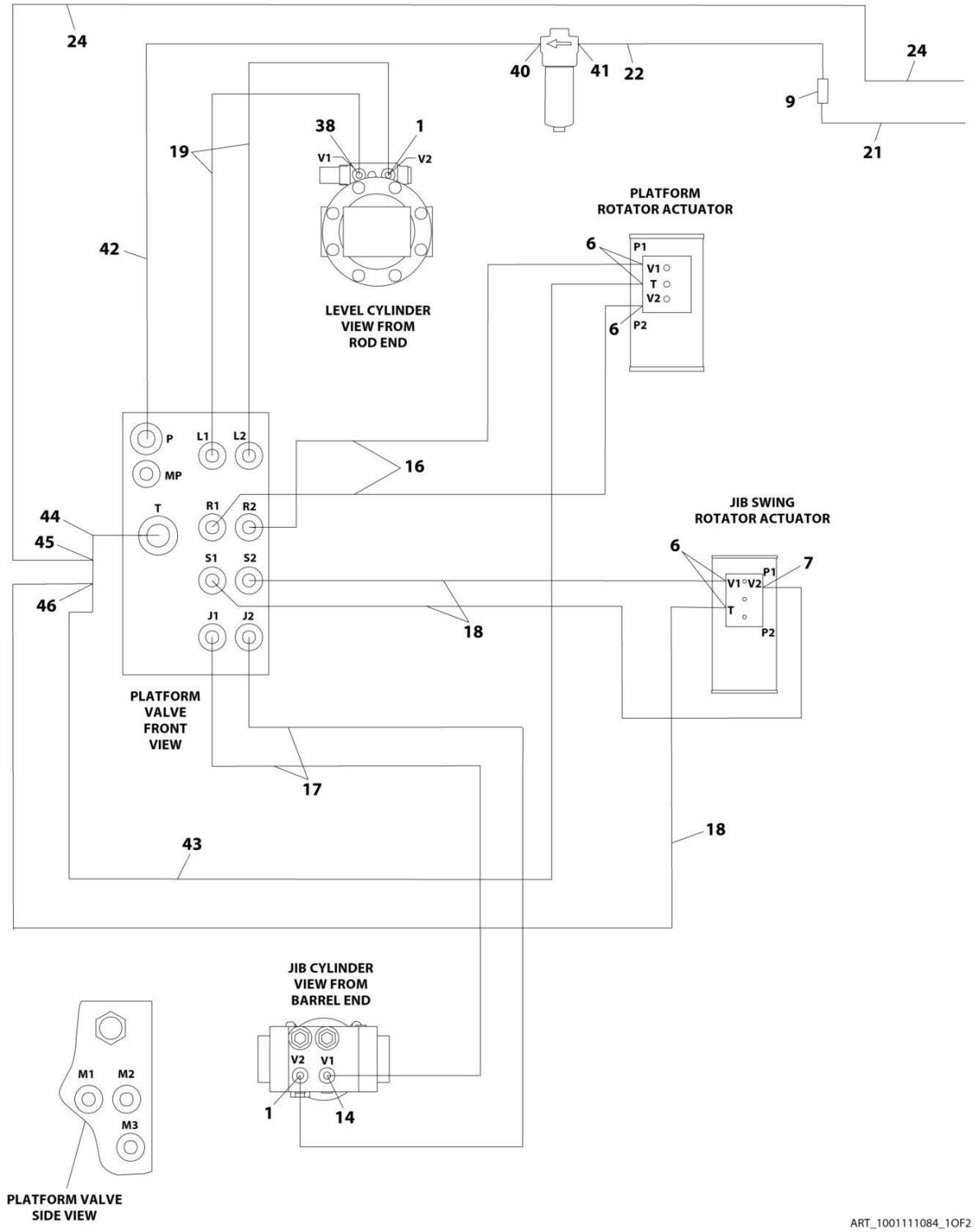

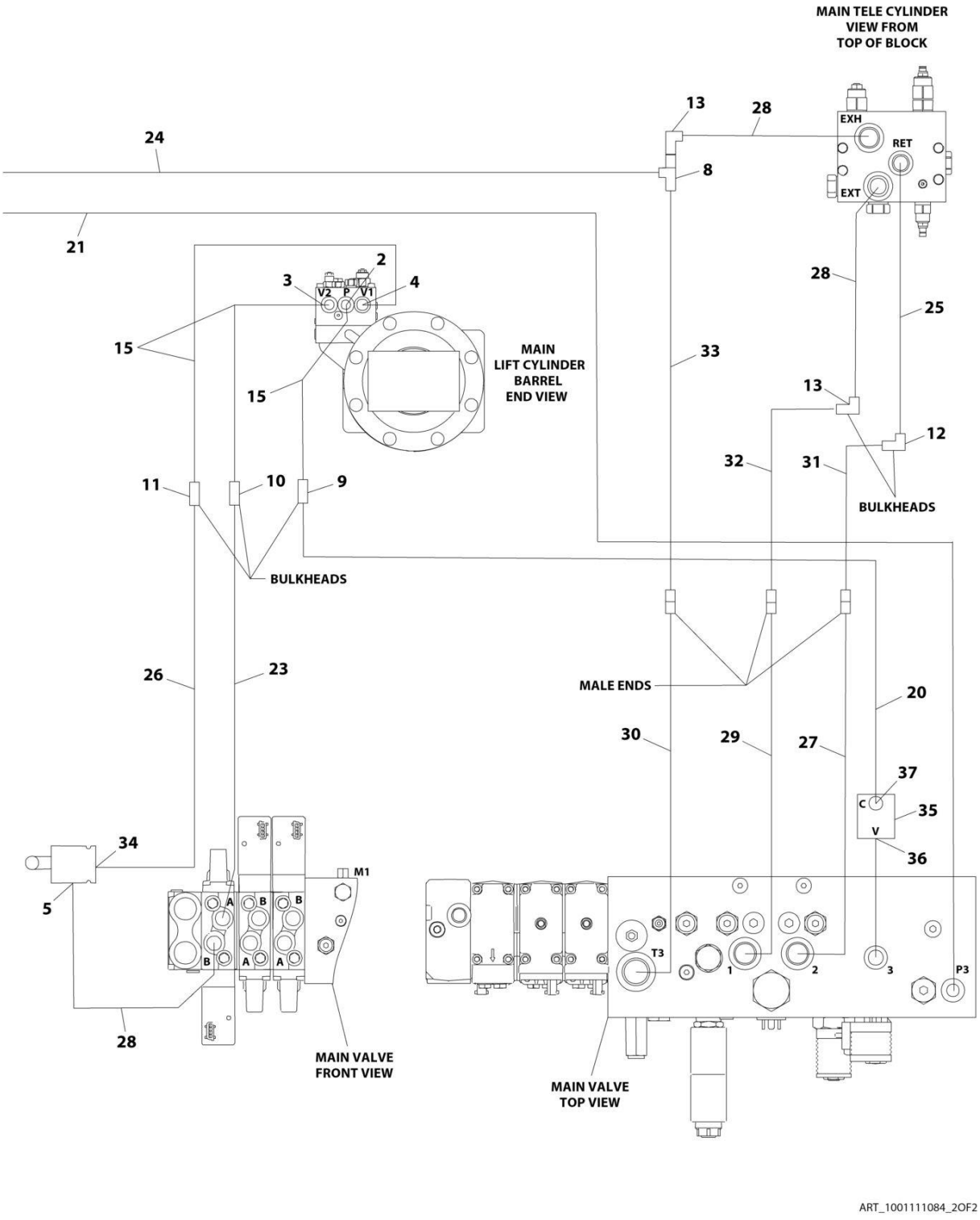
MAIN TELE CYLINDER
VIEW FROM
TOP OF BLOCK
EXH
RET
EXT
MAIN
LIFT CYLINDER
BARREL
END VIEW
V2
P
V1
BULKHEADS
BULKHEADS
MALE ENDS
MAIN VALVE
FRONT VIEW
MAIN VALVE
TOP VIEW
M1
T3
P3
ART_1001111084_2OF2

FIGURE 7-2. HYDRAULIC DIAGRAM - BOOM (WITH SAUER PUMPS)

ITEM	PART NUMBER	QTY	DESCRIPTION	REV
	1001110252	Ref	HYDRAULIC DIAGRAM - BOOM (WITH SAUER PUMPS)	L
	1001111084	Ref	Hydraulic Diagram - Tower/Upper Boom	B
1	2110404	2	Fitting, Straight ORFS/ORB	
2	2110610	1	Fitting, Straight ORFS/ORB	
3	2110810	1	Fitting, Straight ORFS/ORB	
4	2111010	1	Fitting, Straight ORFS/ORB	
5	2111212	1	Fitting, Straight ORFS/ORB	
6	2150404	5	Fitting, 45 ORFS/ORB	
7	2170204	1	Fitting, 90 ORFS/ORB	
8	2170712	1	Fitting, Tee ORFS/FSORFS/ORFS	
9	2171306	2	Fitting, 45 ORFS/ORB	
10	2171308	1	Fitting, 45 ORFS/ORB	
11	2171310	1	Fitting, 45 ORFS/ORB	
12	2171210	1	Fitting, 90 ORFS/ORB	
13	2171212	2	Fitting, 90 ORFS/ORB	
14	2180830	1	Fitting, Straight ORFS/ORB	
15	2720516	1	Hose	
16	2753545	2	Hose	
17	2753717	2	Hose	
18	2753716	3	Hose	
19	2753897	2	Hose	
20	2753978	1	Hose	
21	2754123	1	Hose	
22	2754124	1	Hose	
23	2753985	1	Hose	
24	2753986	1	Hose	
25	2753987	1	Hose	
26	2753994	1	Hose	
27	2753993	1	Hose	
28	2753998	3	Hose	
29	2754002	1	Hose	
30	2754003	1	Hose	
31	2754010	1	Hose	
32	2754011	1	Hose	
33	2753999	1	Hose	
34	2111012	1	Fitting, Straight ORFS/ORB	
35	4641372	1	Valve, Double Check	
35	7027284	1	Cartridge	
35	7011346	1	Seal Kit - 7027284 Cartridge	
35	7027285	1	Cartridge	
35	7011311	1	Seal Kit - 7027285 Cartridge	
36	2221123	1	Fitting, Straight S FSORFS/ORB	
37	2130606	1	Fitting, 90 ORFS/ORB	
38	2180830	1	Fitting, Straight ORFS/ORB	
40	2110612	1	Fitting, Straight ORFS/ORB	
41	2130612	1	Fitting, 90 ORFS/ORB	
42	2717059	1	Hose	
43	2754288	1	Hose	
44	2170708	1	Fitting, Swivel Nut Run Tee ORFS/FSORFS/ORFS	
45	1001097820	1	Fitting, Adapter ORFS/FSORFS	

ITEM	PART NUMBER	QTY	DESCRIPTION	REV
46	2170704	1	Fitting, Swivel Nut Run Tee ORFS/FSORFS/ORFS	

FIGURE 7-3. HYDRAULIC DIAGRAM - DRIVE (WITH REXROTH PUMPS)

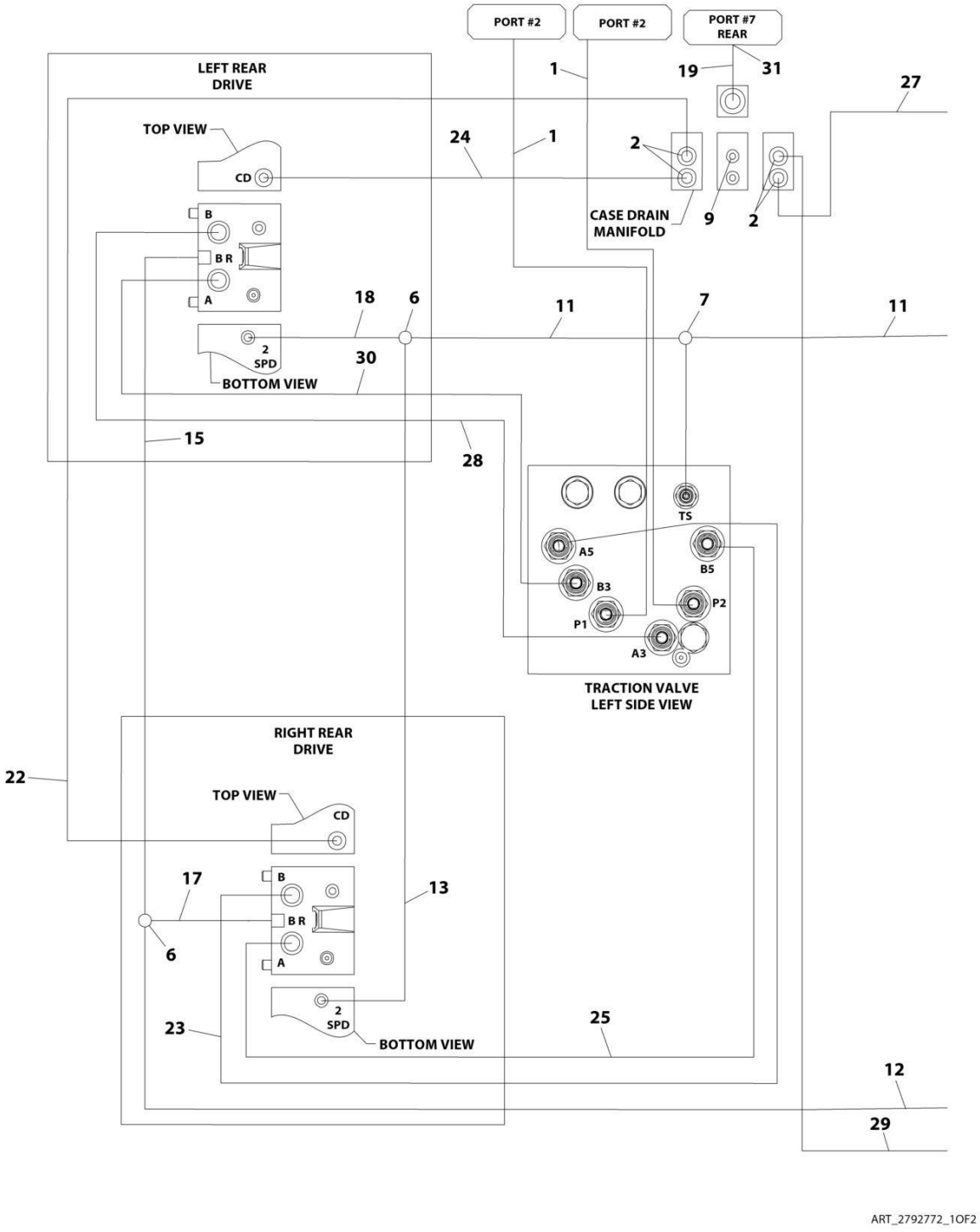

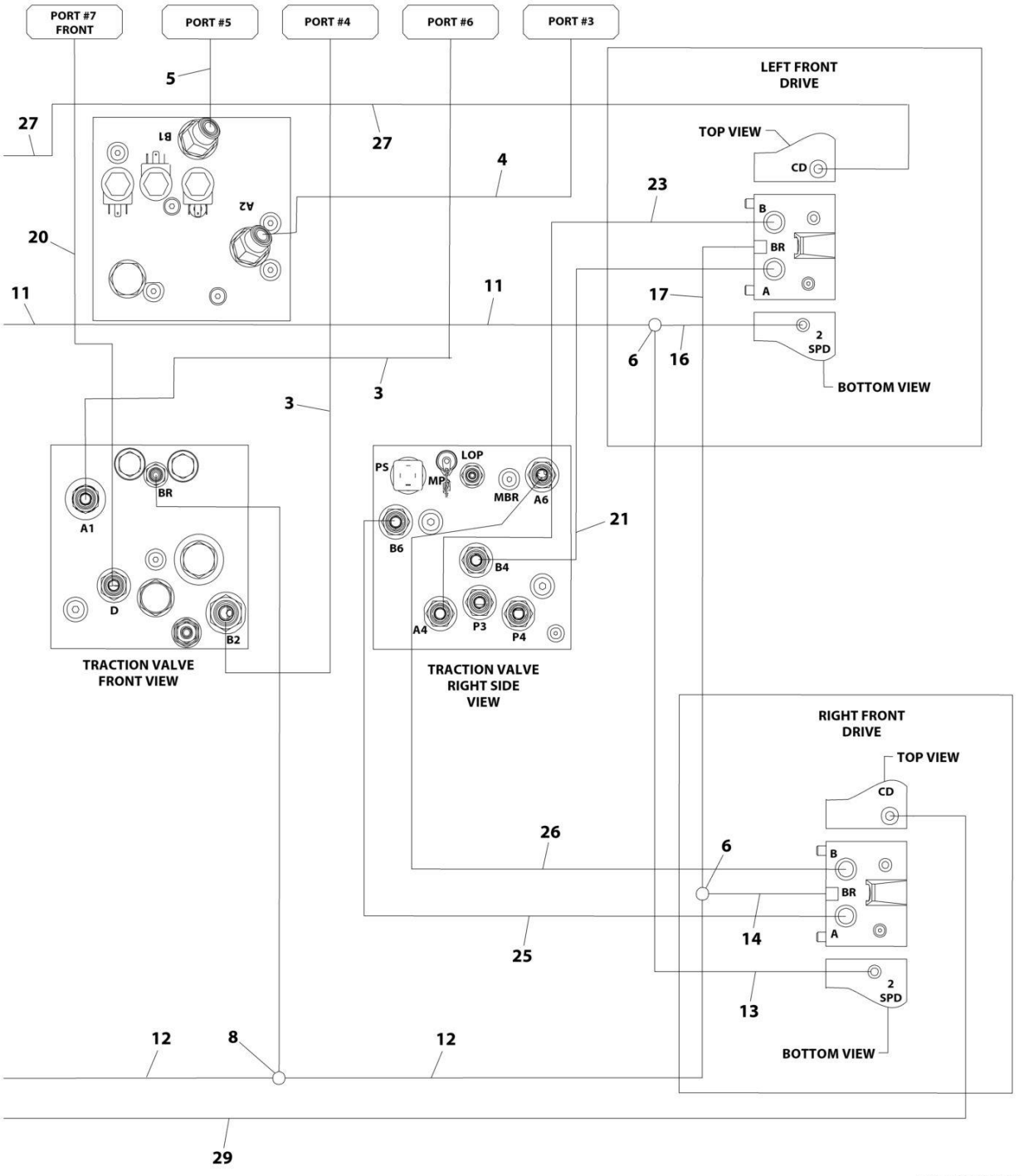

ART_2792772_2OF2

FIGURE 7-3. HYDRAULIC DIAGRAM - DRIVE (WITH REXROTH PUMPS)

ITEM	PART NUMBER	QTY	DESCRIPTION	REV
	1283457	Ref	HYDRAULIC DIAGRAM - DRIVE	L
	2792772	Ref	Hydraulic Diagram - Drive Circuit	F
1	2753685	2	Hose	
2	2110808	4	Fitting, Straight ORFS/ORB	
3	2753703	2	Hose	
4	2753764	1	Hose	
5	2753768	1	Hose	
6	2170504	4	Fitting, Tee ORFS	
7	2170704	1	Fitting, Tee ORFS/ORB/ORFS	
8	2170804	1	Fitting, Tee ORFS/ORB/ORFS	
9	2220235	1	Plug	
11	2753541	2	Hose	
12	2753545	2	Hose	
13	2753677	2	Hose	
14	2753714	1	Hose	
15	2753713	1	Hose	
16	2753716	1	Hose	
17	2753715	2	Hose	
18	2753552	1	Hose	
19	2753752	1	Hose	
20	2753582	1	Hose	
21	2753756	1	Hose	
22	2753747	1	Hose	
23	2753757	2	Hose	
24	2753748	1	Hose	
25	2753759	2	Hose	
26	2753760	1	Hose	
27	2753749	1	Hose	
28	2753761	1	Hose	
29	2753750	1	Hose	
30	2753762	1	Hose	
31	2110812	1	Fitting, Straight ORFS/ORB	

FIGURE 7-4. HYDRAULIC DIAGRAM - DRIVE (WITH SAUER PUMPS)

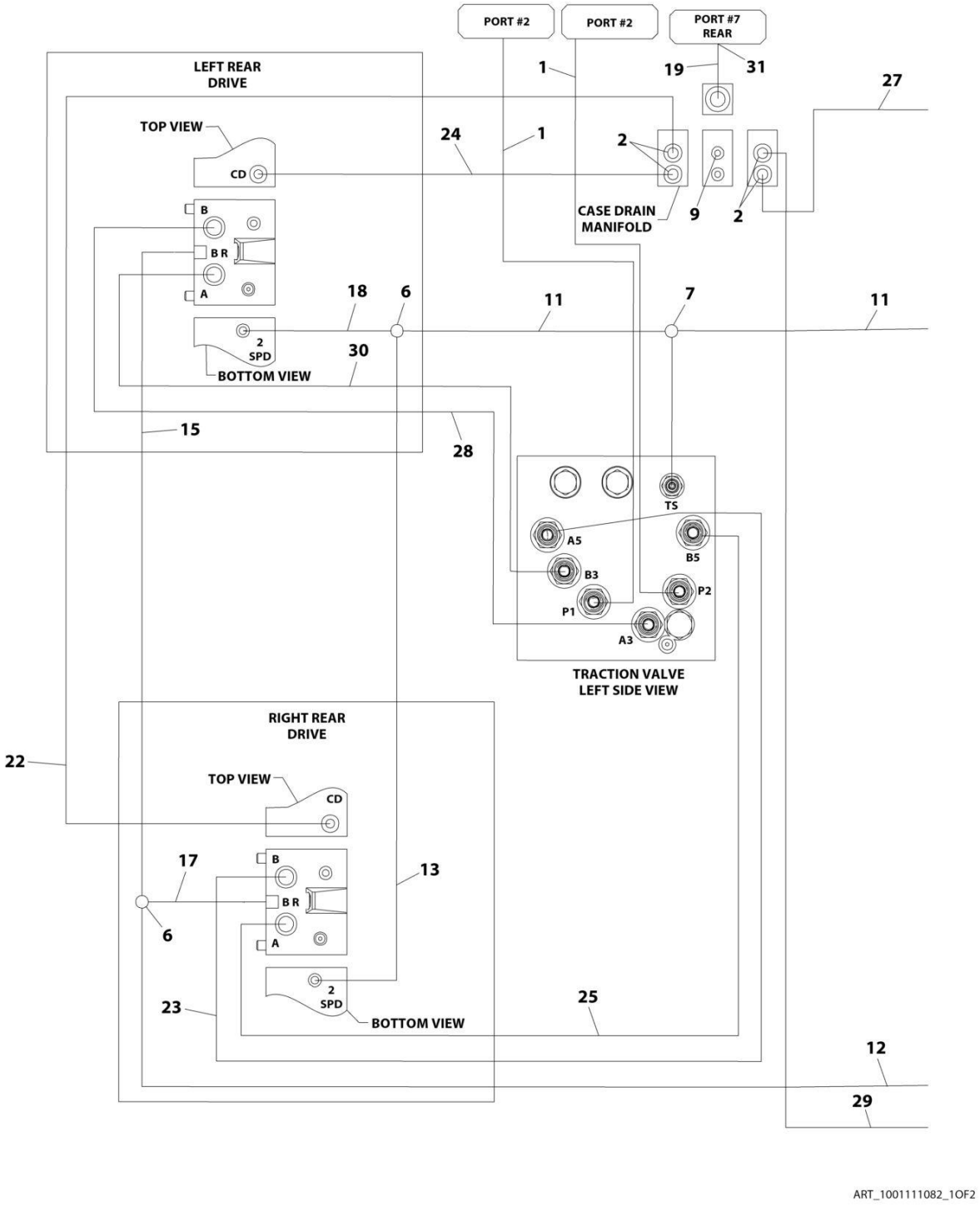

ART_1001111082_1OF2

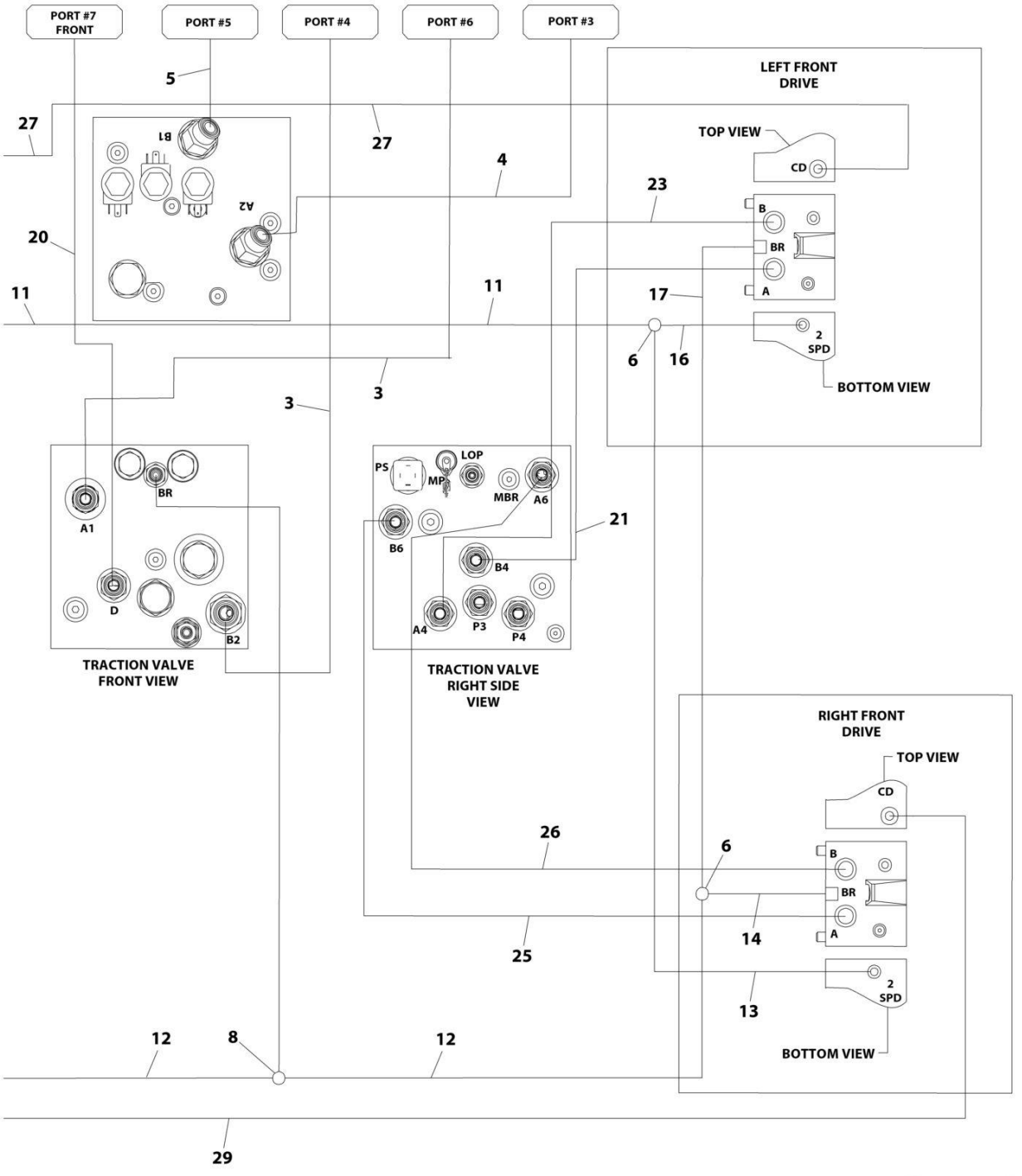

ART_1001111082_2OF2

FIGURE 7-4. HYDRAULIC DIAGRAM - DRIVE (WITH SAUER PUMPS)

ITEM	PART NUMBER	QTY	DESCRIPTION	REV
	1001110252	Ref	HYDRAULIC DIAGRAM - DRIVE (WITH SAUER PUMPS)	L
	1001111082	Ref	Hydraulic Diagram - Drive Circuit	C
1	2753685	2	Hose	
2	2110808	4	Fitting, Straight ORFS/ORB	
3	2753703	2	Hose	
4	2753764	1	Hose	
5	2753768	1	Hose	
6	2170504	4	Fitting, Tee ORFS	
7	2170704	1	Fitting, Tee ORFS/ORB/ORFS	
8	2170804	1	Fitting, Tee ORFS/ORB/ORFS	
9	2220235	1	Plug	
11	2753541	2	Hose	
12	2753545	2	Hose	
13	2753677	2	Hose	
14	2753714	1	Hose	
15	2753713	1	Hose	
16	2753716	1	Hose	
17	2753715	2	Hose	
18	2753552	1	Hose	
19	2753752	1	Hose	
20	2753582	1	Hose	
21	2753756	1	Hose	
22	2753747	1	Hose	
23	2753757	2	Hose	
24	2753748	1	Hose	
25	2753759	2	Hose	
26	2753760	1	Hose	
27	2753749	1	Hose	
28	2753761	1	Hose	
29	2753750	1	Hose	
30	2753762	1	Hose	
31	2110812	1	Fitting, Straight ORFS/ORB	

FIGURE 7-5. HYDRAULIC DIAGRAM - OSCILLATING AXLE (WITH REXROTH PUMPS)

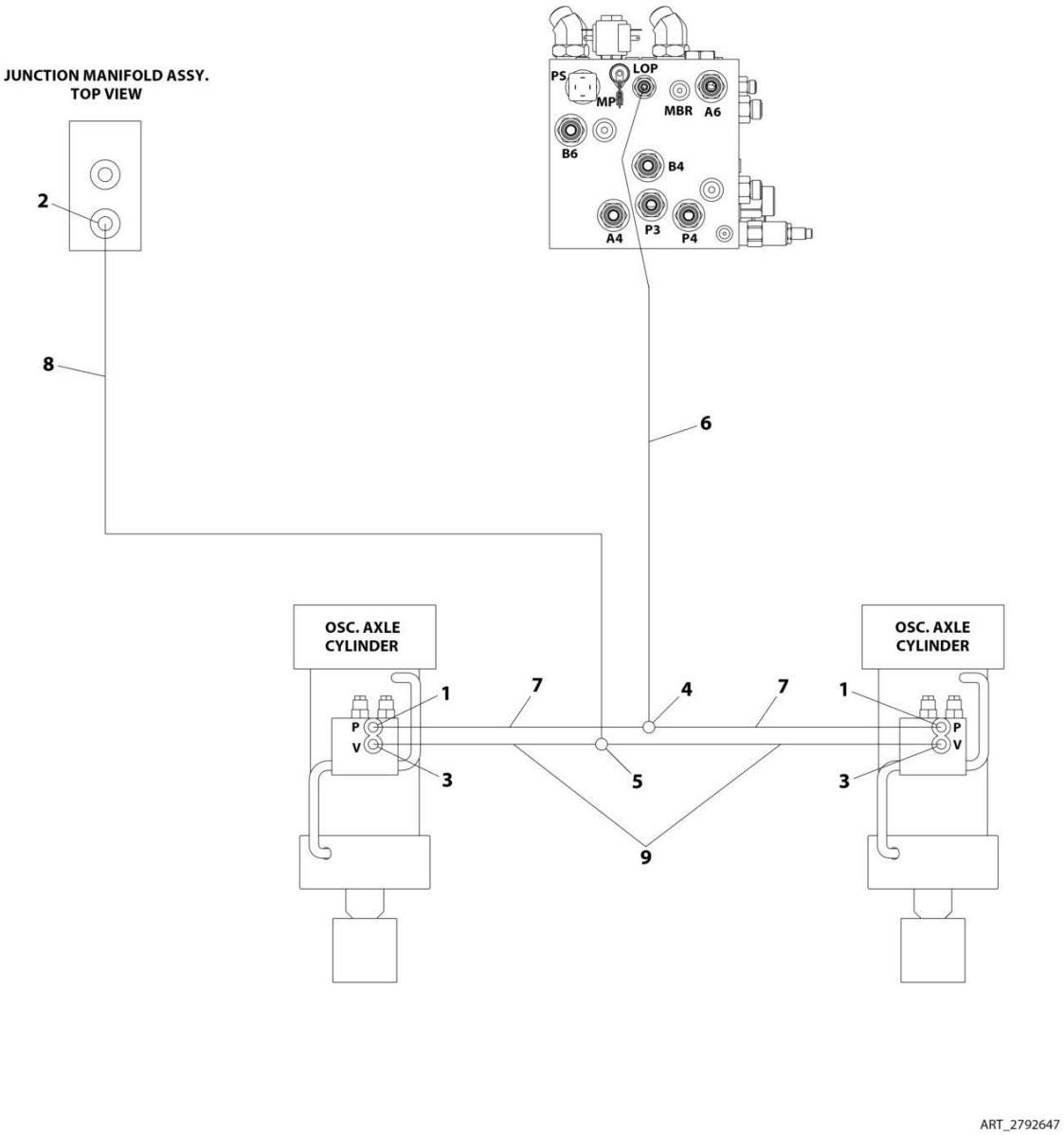

FIGURE 7-5. HYDRAULIC DIAGRAM - OSCILLATING AXLE (WITH REXROTH PUMPS)

ITEM	PART NUMBER	QTY	DESCRIPTION	REV
	1283457	Ref	HYDRAULIC DIAGRAM - OSCILLATING AXLE	L
	2792647	Ref	Hydraulic Diagram - Oscillating Axle	4
1	2110406	2	Fitting, Straight ORFS/ORB	
2	2110604	1	Fitting, Straight ORFS/ORB	
3	2110606	2	Fitting, Straight ORFS/ORB	
4	2170504	1	Fitting, Tee ORFS	
5	2170506	1	Fitting, Tee ORFS	
6	2753726	1	Hose	
7	2753719	2	Hose	
8	2753727	1	Hose	
9	2753729	2	Hose	

FIGURE 7-6. HYDRAULIC DIAGRAM - OSCILLATING AXLE (WITH SAUER PUMPS)

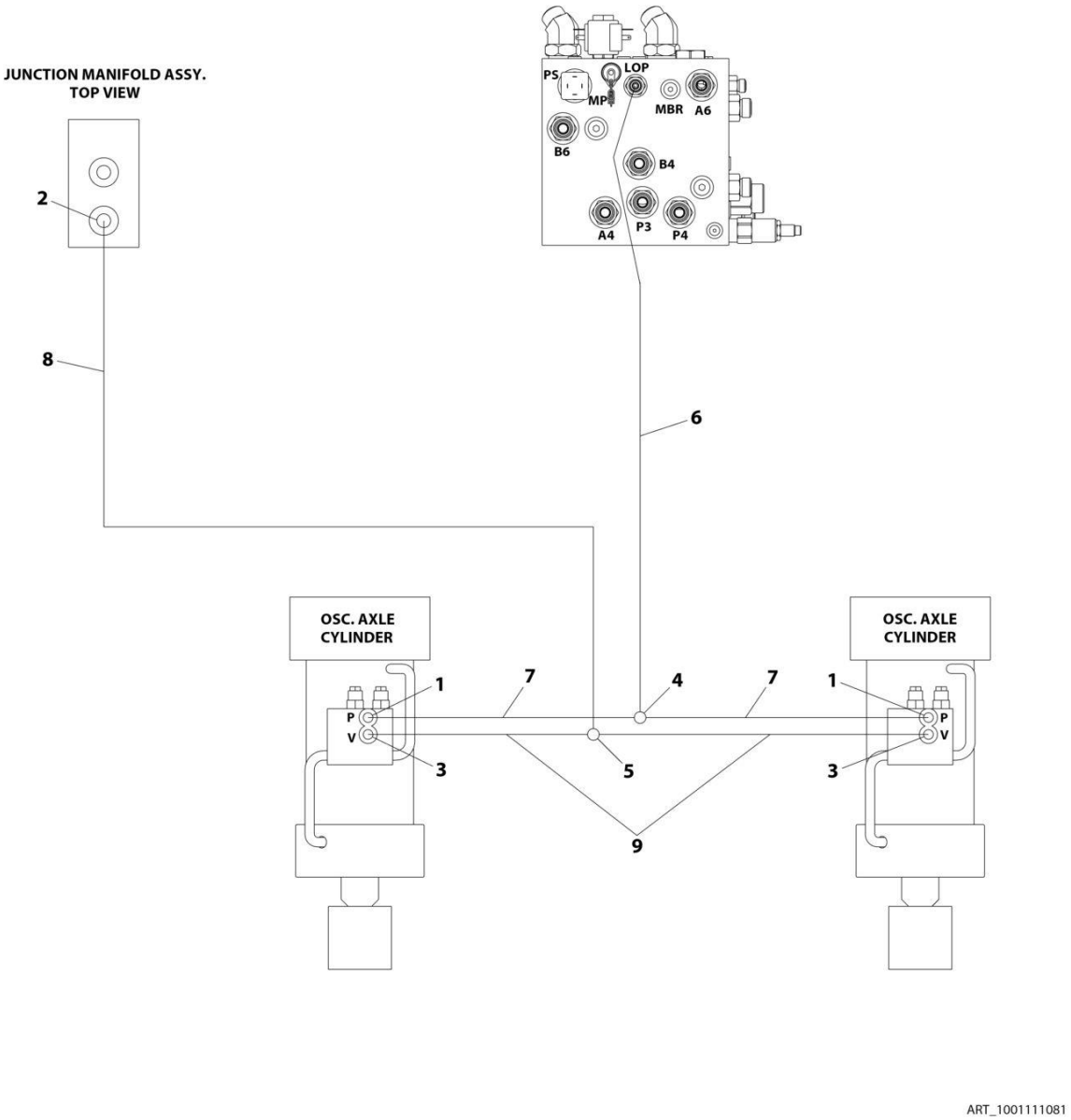

FIGURE 7-6. HYDRAULIC DIAGRAM - OSCILLATING AXLE (WITH SAUER PUMPS)

ITEM	PART NUMBER	QTY	DESCRIPTION	REV
	1001110252	Ref	HYDRAULIC DIAGRAM - OSCILLATING AXLE (WITH SAUER PUMPS)	L
	1001111081	Ref	Hydraulic Diagram - Oscillating Axle	1
1	2110406	2	Fitting, Straight ORFS/ORB	
2	2110604	1	Fitting, Straight ORFS/ORB	
3	2110606	2	Fitting, Straight ORFS/ORB	
4	2170504	1	Fitting, Tee ORFS	
5	2170506	1	Fitting, Tee ORFS	
6	2753726	1	Hose	
7	2753719	2	Hose	
8	2753727	1	Hose	
9	2753729	2	Hose	

FIGURE 7-7. HYDRAULIC DIAGRAM - STEER (WITH REXROTH PUMPS)

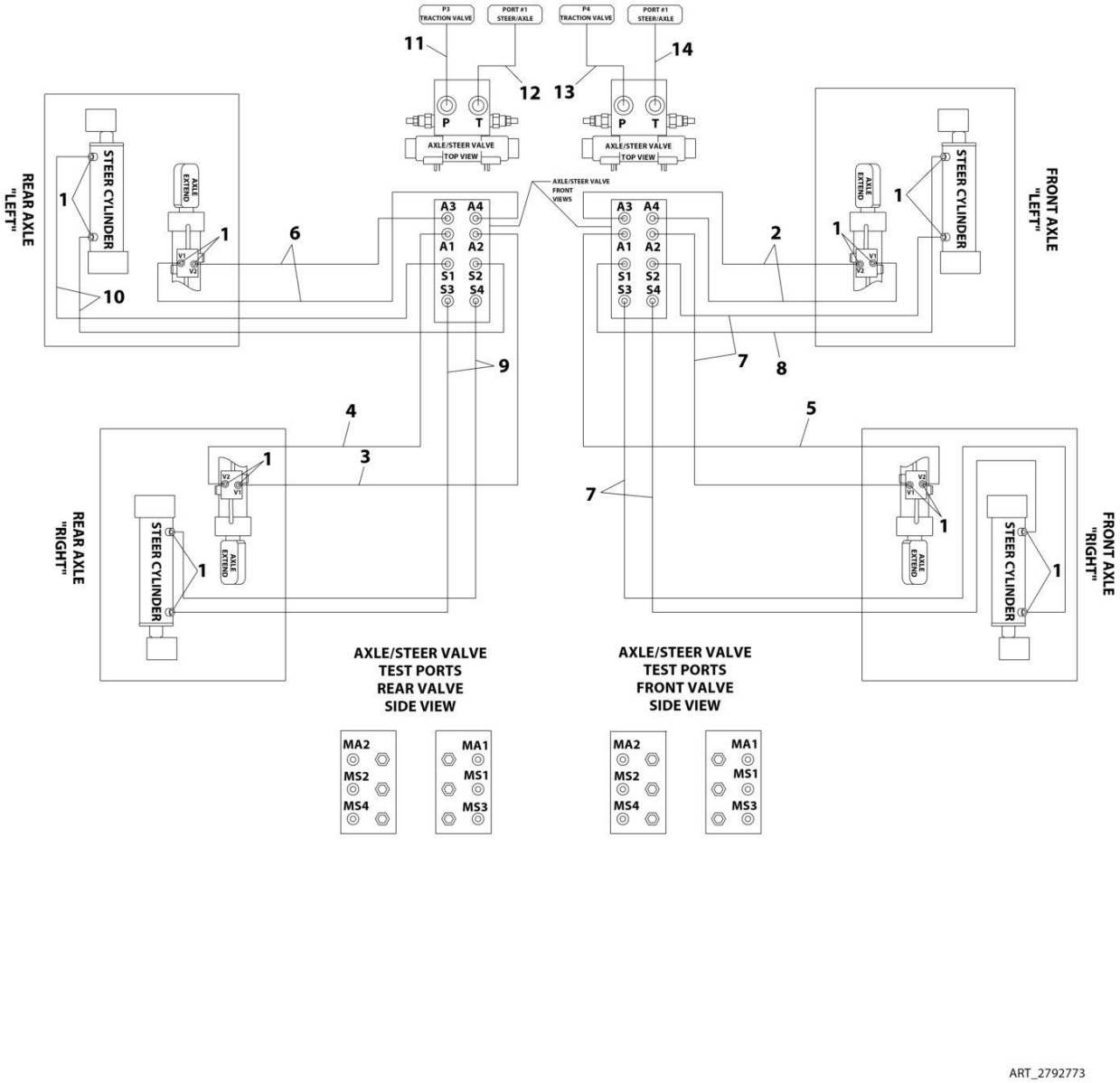

FIGURE 7-7. HYDRAULIC DIAGRAM - STEER (WITH REXROTH PUMPS)

ITEM	PART NUMBER	QTY	DESCRIPTION	REV
	1283457	Ref	HYDRAULIC DIAGRAM - STEER	L
	2792773	Ref	Hydraulic Diagram - Steer	2
1	2130606	16	Fitting, 90 ORFS/ORB	
2	2753732	2	Hose	
3	2753733	1	Hose	
4	2753728	1	Hose	
5	2753734	1	Hose	
6	2753735	2	Hose	
7	2753736	4	Hose	
8	2753737	1	Hose	
9	2753738	2	Hose	
10	2753739	2	Hose	
11	2753753	1	Hose	
12	2753742	1	Hose	
13	2753754	1	Hose	
14	2753743	1	Hose	

FIGURE 7-8. HYDRAULIC DIAGRAM - STEER (WITH SAUER PUMPS)

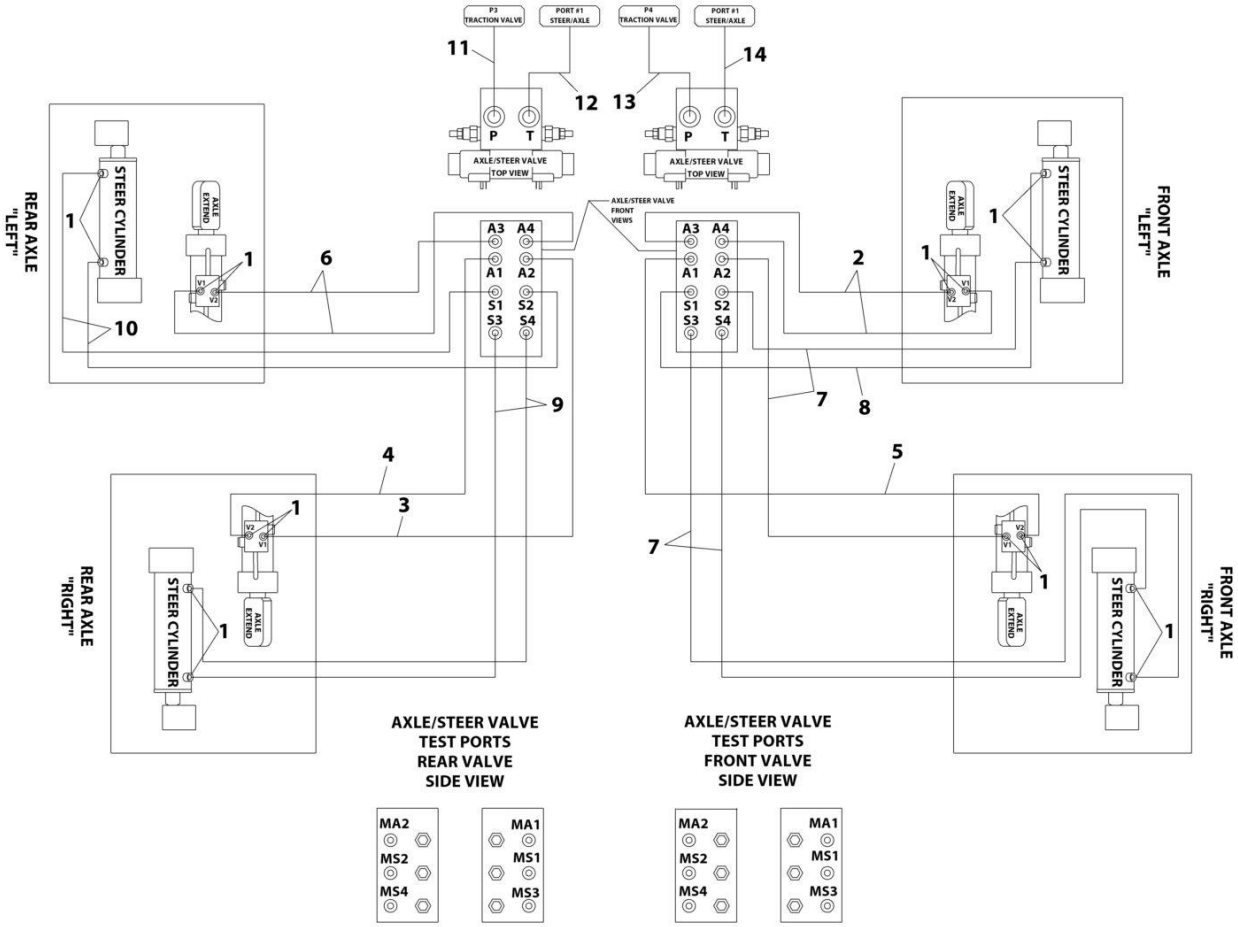

ART_1001111083

FIGURE 7-8. HYDRAULIC DIAGRAM - STEER (WITH SAUER PUMPS)

ITEM	PART NUMBER	QTY	DESCRIPTION	REV
	1001110252	Ref	HYDRAULIC DIAGRAM - STEER (WITH SAUER PUMPS)	L
	1001111083	Ref	Hydraulic Diagram - Steer	1
1	2130606	16	Fitting, 90 ORFS/ORB	
2	2753732	2	Hose	
3	2753733	1	Hose	
4	2753728	1	Hose	
5	2753734	1	Hose	
6	2753735	2	Hose	
7	2753736	4	Hose	
8	2753737	1	Hose	
9	2753738	2	Hose	
10	2753739	2	Hose	
11	2753753	1	Hose	
12	2753742	1	Hose	
13	2753754	1	Hose	
14	2753743	1	Hose	

FIGURE 7-9. HYDRAULIC DIAGRAM - TURNTABLE (DEUTZ TD2011 ENGINES WITH REXROTH PUMPS)

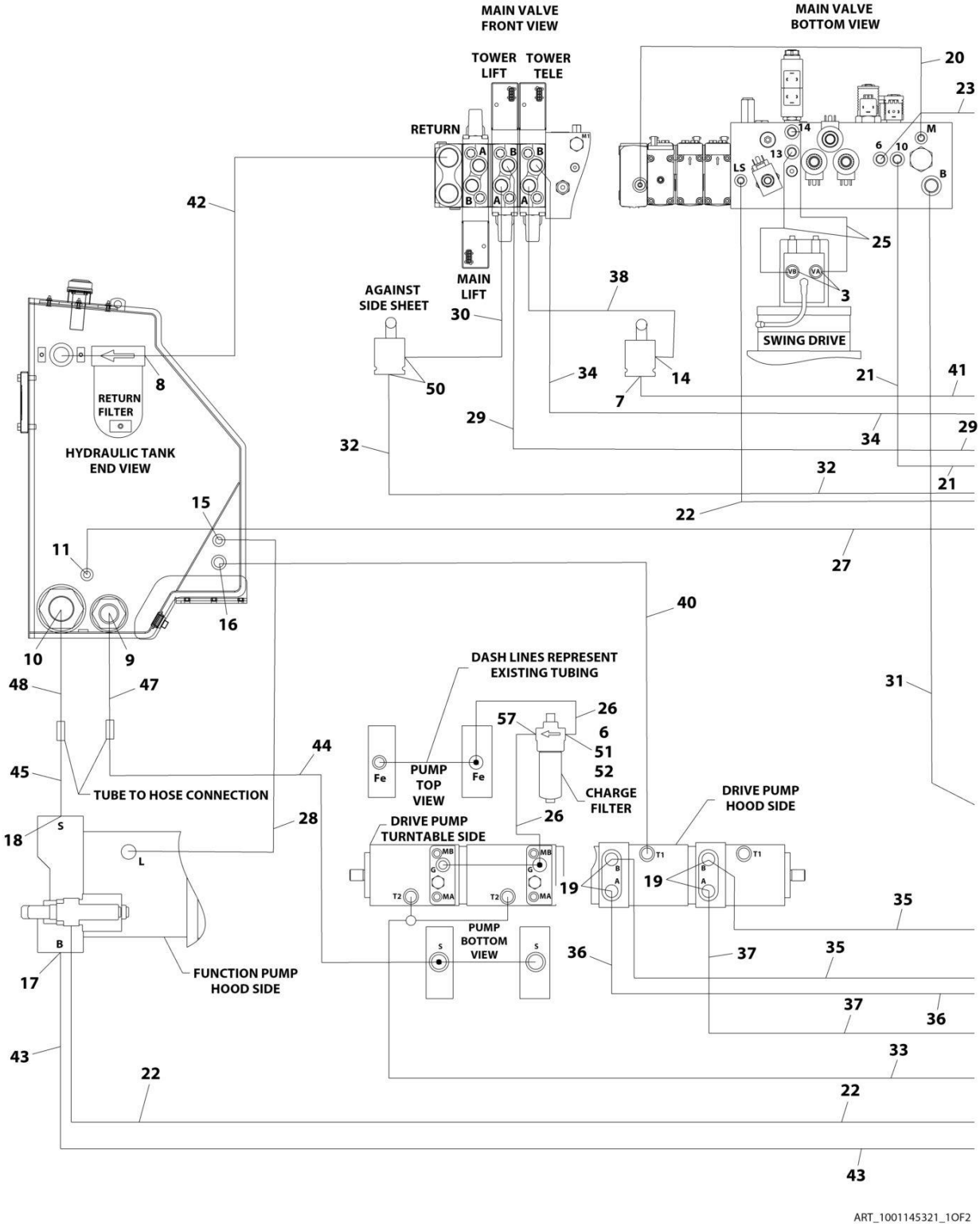

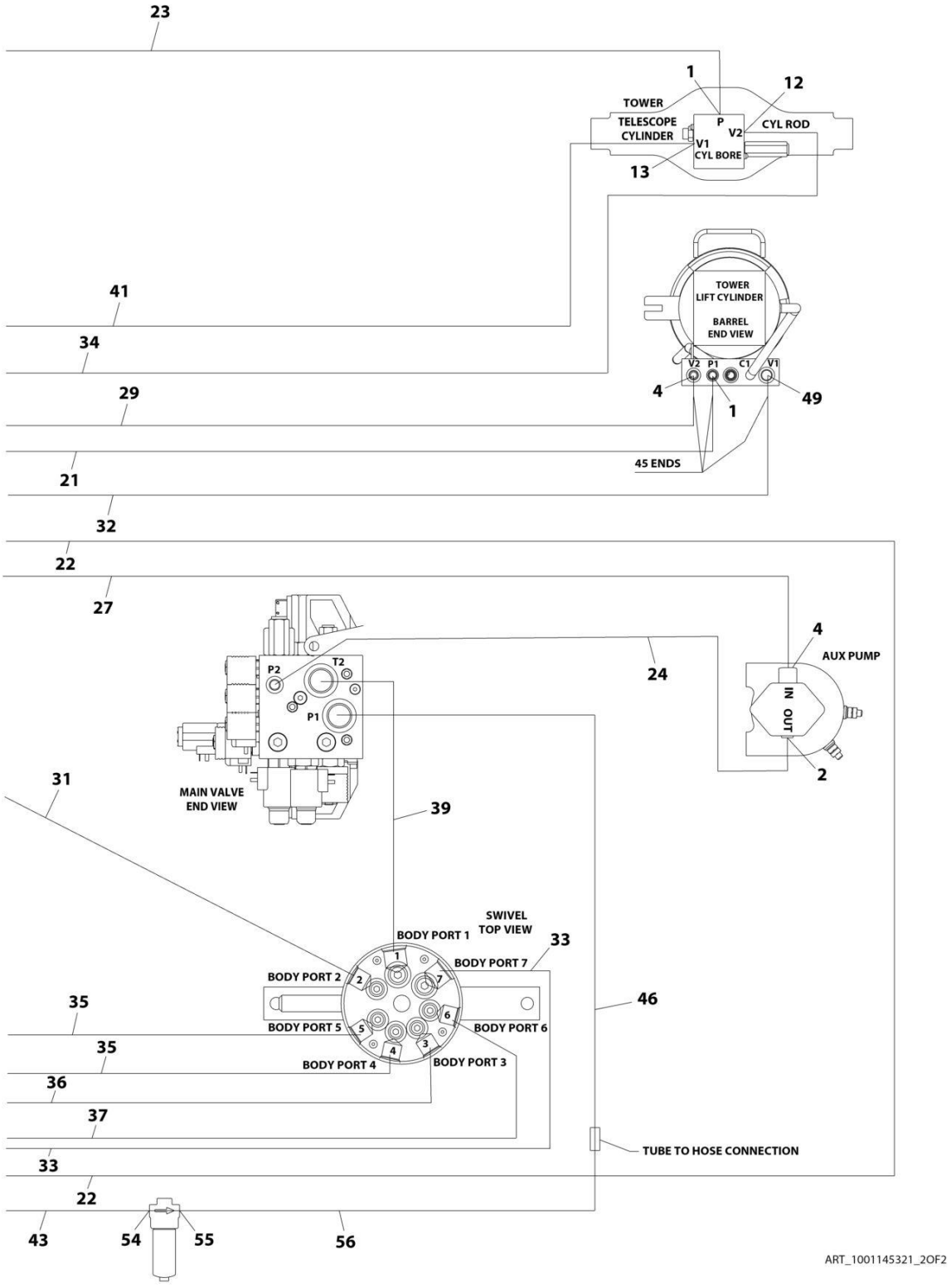
23
1
12
TOWER
TELESCOPE CYLINDER
P
V2
CYL ROD
V1
CYL BORE
13
41
34
29
21
32
22
27
TOWER LIFT CYLINDER
BARREL END VIEW
V2 P1 C1 V1
4
1
49
45 ENDS
24
4
AUX PUMP
IN
OUT
2
P2
T2
P1
MAIN VALVE END VIEW
31
39
SWIVEL TOP VIEW
BODY PORT 1
BODY PORT 2
BODY PORT 3
BODY PORT 4
BODY PORT 5
BODY PORT 6
BODY PORT 7
33
46
35
35
36
37
33
22
TUBE TO HOSE CONNECTION
43
54
55
56
ART_1001145321_2OF2

FIGURE 7-9. HYDRAULIC DIAGRAM - TURNTABLE (DEUTZ TD2011 ENGINES WITH REXROTH PUMPS)

ITEM	PART NUMBER	QTY	DESCRIPTION	REV
	1283457	Ref	HYDRAULIC DIAGRAM - TURNTABLE (DEUTZ TD2011 ENGINES WITH REXROTH PUMPS)	L
	1001145321	Ref	Hydraulic Diagram - Turntable	B
1	2110404	1	Fitting, Straight ORFS/ORB	
2	2110608	1	Fitting, Straight ORFS/ORB	
3	2110610	2	Fitting, Straight ORFS/ORB	
4	2110808	2	Fitting, Straight ORFS/ORB	
6	2220811	1	Fitting, Reducer ORB/ORB	
7	2111212	1	Fitting, Straight ORFS/ORB	
8	2111620	1	Fitting, Straight ORFS/ORB	
9	2112020	1	Fitting, Straight ORFS/ORB	
10	2113232	1	Fitting, Straight ORFS/ORB	
11	2130808	1	Fitting, 90 ORFS/ORB	
12	2131008	1	Fitting, 90 ORFS/ORB	
13	2131210	1	Fitting, 90 ORFS/ORB	
14	2131212	1	Fitting, 90 ORFS/ORB	
15	2150808	1	Fitting, 45 ORFS/ORB	
16	2151212	1	Fitting, 45 ORFS/ORB	
17	2220478	1	Flange Kit	
18	2220737	1	Flange Kit	
19	2221117	4	Flange Kit	
20	2753546	1	Hose	
21	2753975	1	Hose	
22	2753976	1	Hose	
23	2753977	1	Hose	
24	2753673	1	Hose	
25	2753979	2	Hose	
26	2753746	2	Hose	
27	2753590	1	Hose	
28	2753741	1	Hose	
29	2753984	1	Hose	
30	2753988	1	Hose	
31	2753989	1	Hose	
32	2753990	1	Hose	
33	2753991	1	Hose	
34	2753992	1	Hose	
35	2753995	2	Hose	
36	2753996	1	Hose	
37	2753997	1	Hose	
38	2753843	1	Hose	
39	2753999	1	Hose	
40	2754000	1	Hose	
41	2754001	1	Hose	
42	2754004	1	Hose	
43	2754870	1	Hose	
44	2754006	1	Hose	
45	2754007	1	Hose	
46	1001173889	1	Tube	
47	4568849	1	Tube	

ITEM	PART NUMBER	QTY	DESCRIPTION	REV
48	4568815	1	Tube	
49	2111010	1	Fitting, Straight ORFS/ORB	
50	2111012	AR	Fitting, Straight ORFS/ORB	
51	2170308	1	Fitting, Tee ORFS/ORFS/ORB	
52	2170908	1	Fitting, Cap ORFS	
54	2131620	1	Fitting, 90 ORFS/ORB	
55	2132020	1	Fitting, 90 ORFS/ORB	
56	1001173890	1	Hose	
57	2130812	1	Fitting, 90 ORFS/ORB	

FIGURE 7-10. HYDRAULIC DIAGRAM - TURNTABLE (DEUTZ TCD2.9L4 ENGINES AND DEUTZ TCD2.9L4 (STAGE V) ENGINES WITH REXROTH PUMPS)

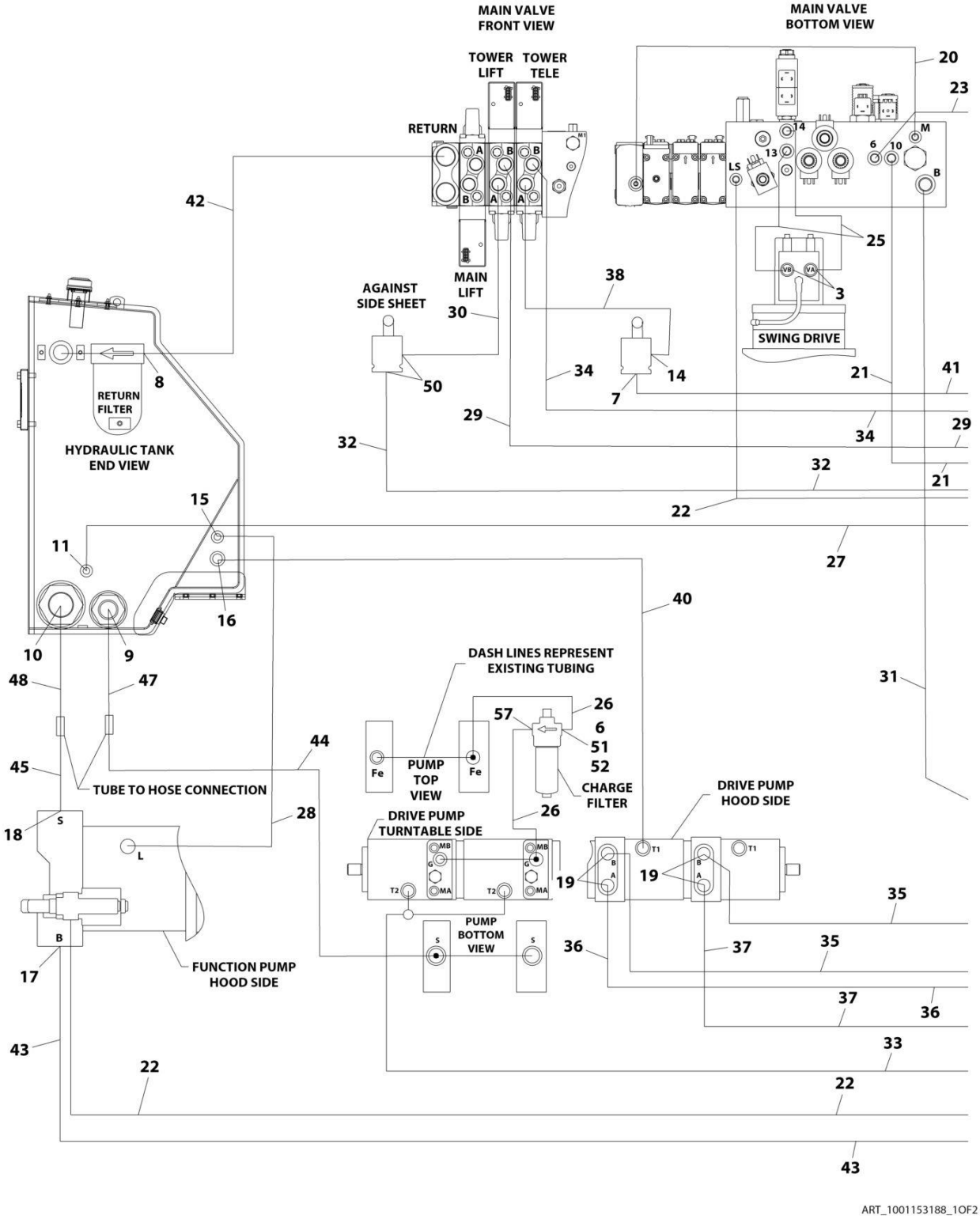

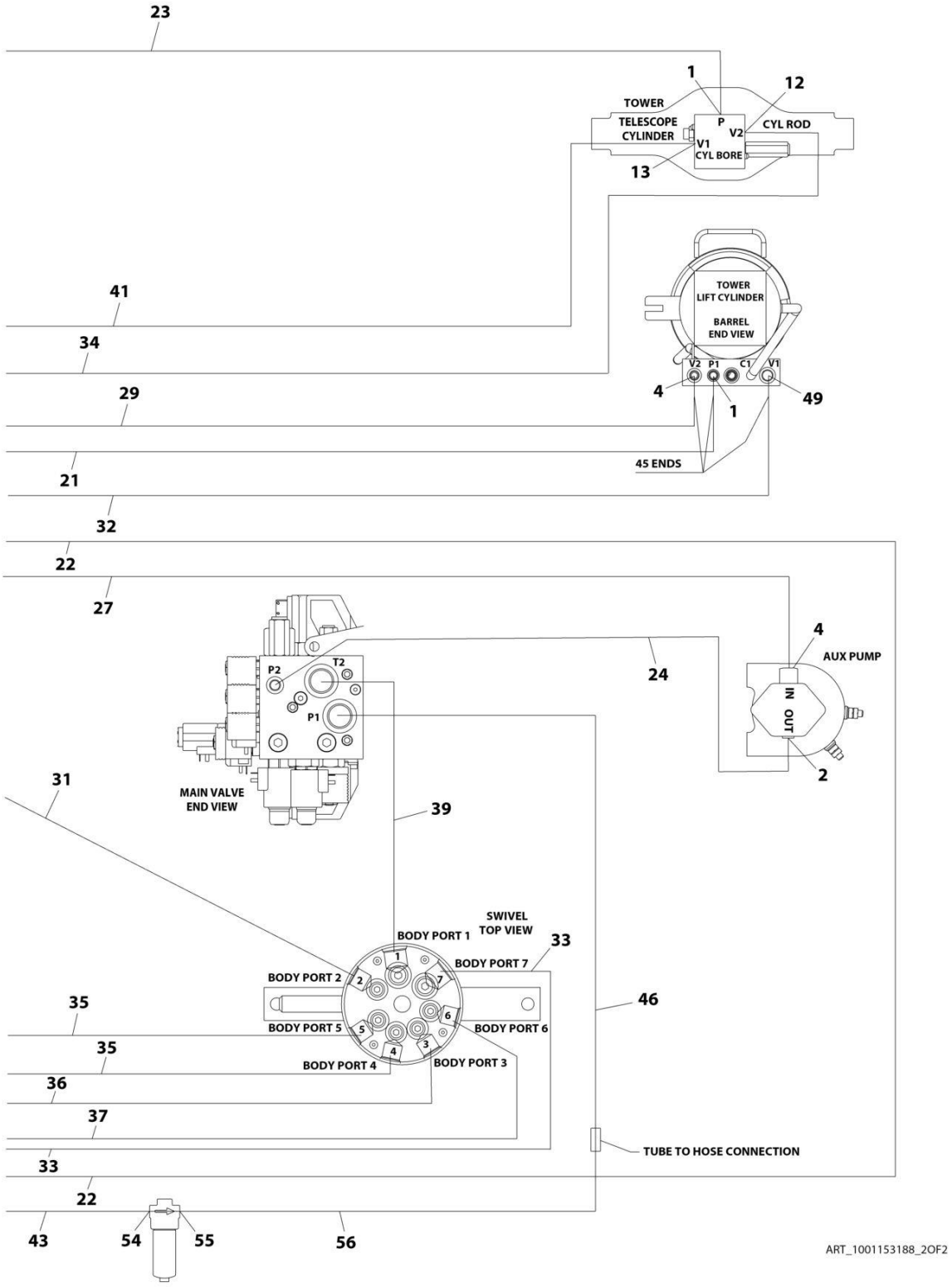
23
1
12
TOWER
TELESCOPE CYLINDER
P
V2
CYL ROD
V1
CYL BORE
13
41
34
29
21
32
22
27
TOWER LIFT CYLINDER
BARREL END VIEW
V2
P1
C1
V1
4
1
49
45 ENDS
24
4
AUX PUMP
IN
OUT
2
P2
T2
P1
MAIN VALVE END VIEW
31
39
SWIVEL TOP VIEW
BODY PORT 1
BODY PORT 7
33
BODY PORT 2
BODY PORT 5
BODY PORT 6
BODY PORT 4
BODY PORT 3
46
35
35
36
37
33
22
TUBE TO HOSE CONNECTION
43
54
55
56
ART_1001153188_2OF2

FIGURE 7-10. HYDRAULIC DIAGRAM - TURNTABLE (DEUTZ TCD2.9L4 ENGINES AND DEUTZ TCD2.9L4 (STAGE V) ENGINES WITH REXROTH PUMPS)

ITEM	PART NUMBER	QTY	DESCRIPTION	REV
	1001152971	Ref	HYDRAULIC DIAGRAM - TURNTABLE (DEUTZ TCD2.9L4 ENGINES AND DEUTZ TCD2.9L4 (STAGE V) ENGINES WITH REXROTH PUMPS)	C
	1001153188	Ref	Hydraulic Diagram - Turntable	B
1	2110404	1	Fitting, Straight ORFS/ORB	
2	2110608	1	Fitting, Straight ORFS/ORB	
3	2110610	2	Fitting, Straight ORFS/ORB	
4	2110808	2	Fitting, Straight ORFS/ORB	
6	2220811	1	Fitting, Reducer ORB/ORB	
7	2111212	1	Fitting, Straight ORFS/ORB	
8	2111620	1	Fitting, Straight ORFS/ORB	
9	2112020	1	Fitting, Straight ORFS/ORB	
10	2113232	1	Fitting, Straight ORFS/ORB	
11	2130808	1	Fitting, 90 ORFS/ORB	
12	2131008	1	Fitting, 90 ORFS/ORB	
13	2131210	1	Fitting, 90 ORFS/ORB	
14	2131212	1	Fitting, 90 ORFS/ORB	
15	2150808	1	Fitting, 45 ORFS/ORB	
16	2151212	1	Fitting, 45 ORFS/ORB	
17	2220478	1	Flange Kit	
18	2220737	1	Flange Kit	
19	2221117	4	Flange Kit	
20	2753546	1	Hose	
21	2753975	1	Hose	
22	2753976	1	Hose	
23	2753977	1	Hose	
24	2753673	1	Hose	
25	2753979	2	Hose	
26	2753746	2	Hose	
27	2753590	1	Hose	
28	2753741	1	Hose	
29	2753984	1	Hose	
30	2753988	1	Hose	
31	2753989	1	Hose	
32	2753990	1	Hose	
33	2753991	1	Hose	
34	2753992	1	Hose	
35	2753995	2	Hose	
36	2753996	1	Hose	
37	2753997	1	Hose	
38	2753843	1	Hose	
39	2753999	1	Hose	
40	2754000	1	Hose	
41	2754001	1	Hose	
42	2754004	1	Hose	
43	2754870	1	Hose	
44	1001153186	1	Hose	
45	2754007	1	Hose	
46	1001173889	1	Tube	

ITEM	PART NUMBER	QTY	DESCRIPTION	REV
47	4568849	1	Tube	
48	4568815	1	Tube	
49	2111010	1	Fitting, Straight ORFS/ORB	
50	2111012	AR	Fitting, Straight ORFS/ORB	
51	2170308	1	Fitting, Tee ORFS/ORFS/ORB	
52	2170908	1	Fitting, Cap ORFS	
54	2131620	1	Fitting, 90 ORFS/ORB	
55	2132020	1	Fitting, 90 ORFS/ORB	
56	1001173890	1	Hose	
57	2130812	1	Fitting, 90 ORFS/ORB	

FIGURE 7-11. HYDRAULIC DIAGRAM - TURNTABLE (WITH SAUER PUMPS)

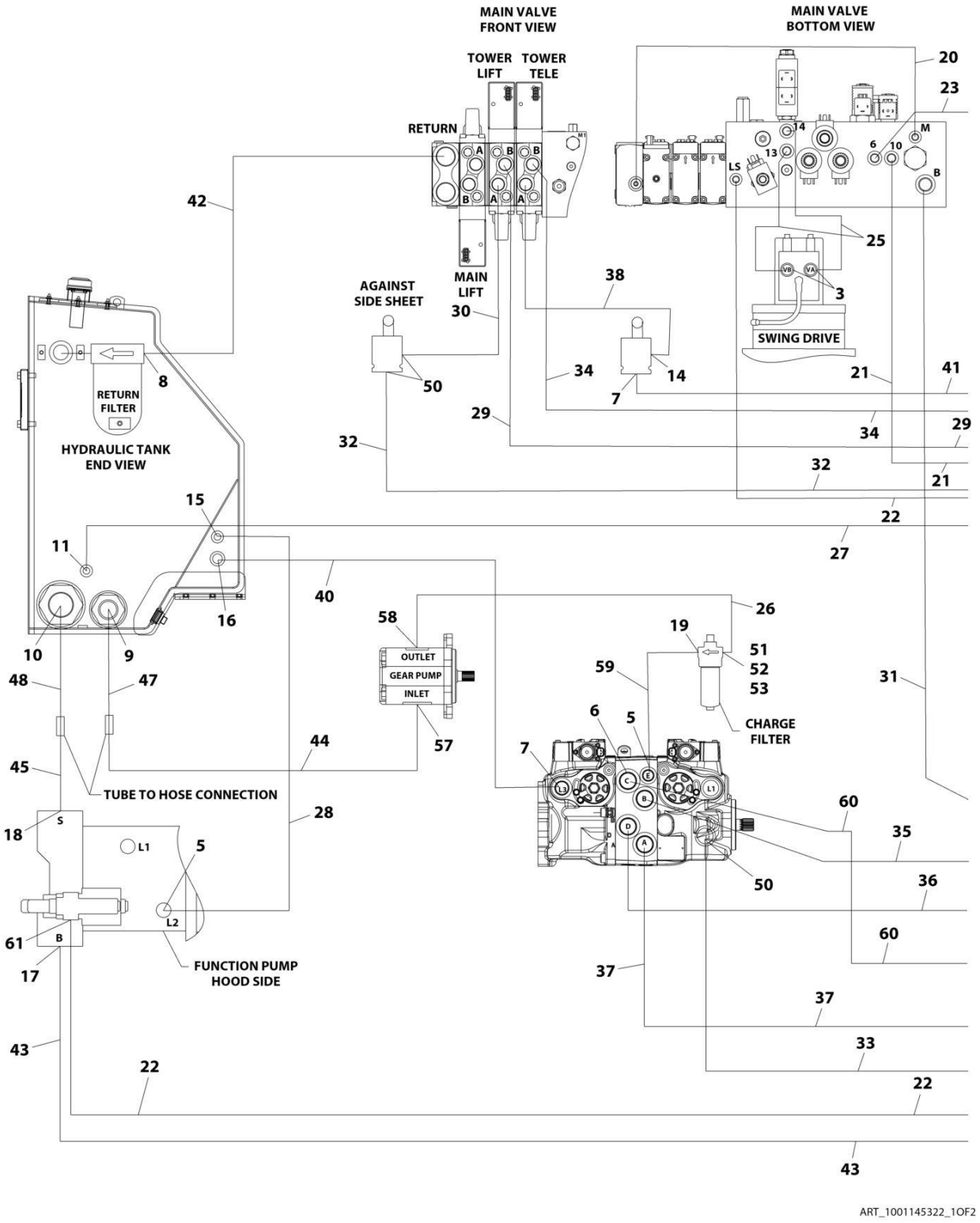

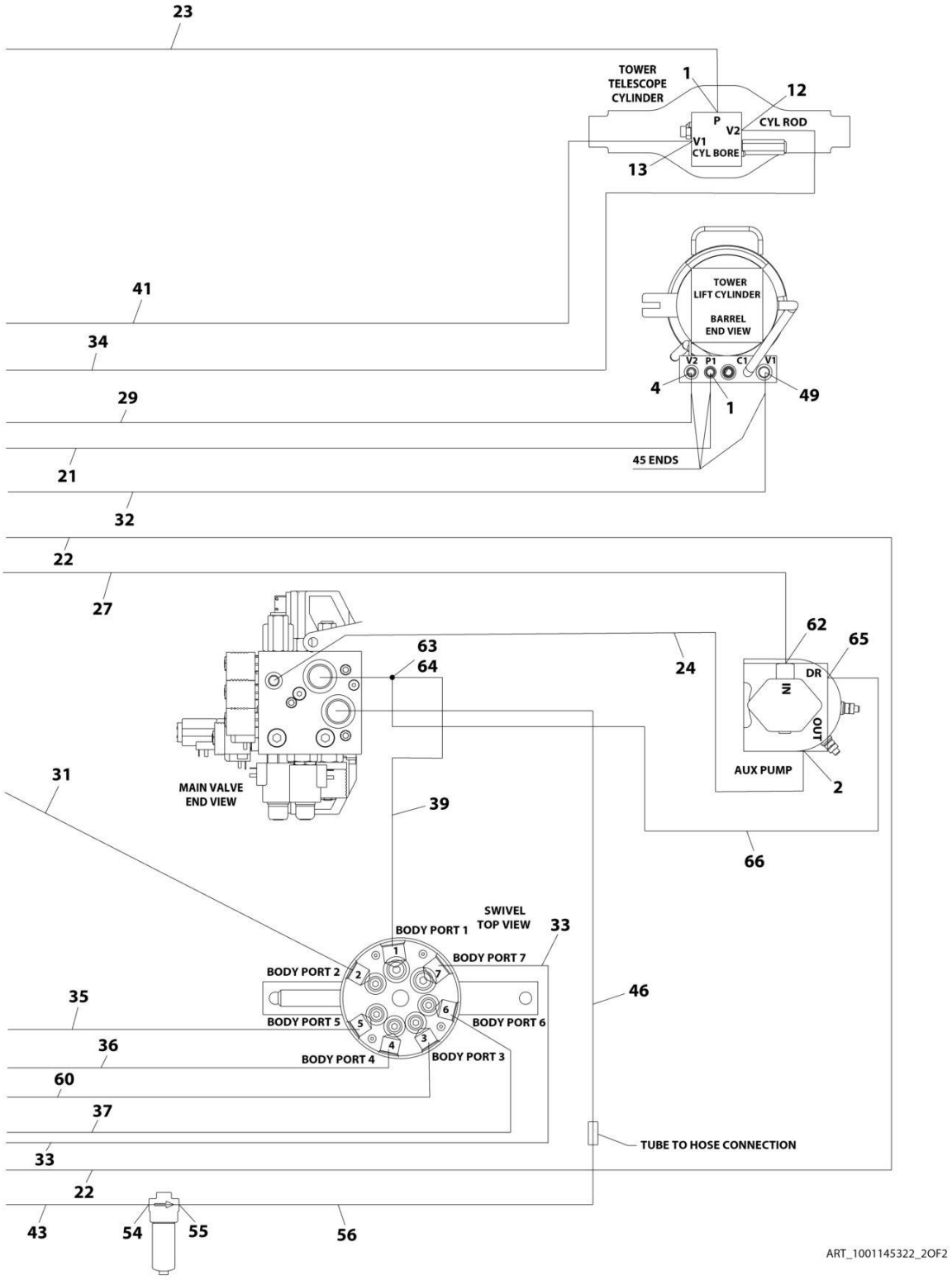
23
TOWER TELESCOPE CYLINDER
1
12
P
V2
CYL ROD
V1
CYL BORE
13
41
34
29
21
32
22
27
TOWER LIFT CYLINDER
BARREL END VIEW
V2 P1 C1 V1
4
1
49
45 ENDS
62
65
DR
IN
OUT
AUX PUMP
2
24
63
64
MAIN VALVE END VIEW
31
39
66
SWIVEL TOP VIEW
BODY PORT 1
BODY PORT 2
BODY PORT 3
BODY PORT 4
BODY PORT 5
BODY PORT 6
BODY PORT 7
33
35
36
60
37
46
TUBE TO HOSE CONNECTION
43
54
55
56
ART_1001145322_2OF2

FIGURE 7-11. HYDRAULIC DIAGRAM - TURNTABLE (WITH SAUER PUMPS)

ITEM	PART NUMBER	QTY	DESCRIPTION	REV
	1001110252	Ref	HYDRAULIC DIAGRAM - TURNTABLE (WITH SAUER PUMPS)	L
	1001145322	Ref	Hydraulic Diagram - Turntable	E
1	2110404	1	Fitting, Straight ORFS/ORB	
2	2110608	1	Fitting, Straight ORFS/ORB	
3	2110610	2	Fitting, Straight ORFS/ORB	
4	2110808	1	Fitting, Straight ORFS/ORB	
5	2110810	2	Fitting, Straight ORFS/ORB	
6	2111016	4	Fitting, Straight ORFS/ORB	
7	2111212	2	Fitting, Straight ORFS/ORB	
8	2111620	1	Fitting, Straight ORFS/ORB	
9	2112020	1	Fitting, Straight ORFS/ORB	
10	2113232	1	Fitting, Straight ORFS/ORB	
11	2130808	1	Fitting, 90 ORFS/ORB	
12	2131008	1	Fitting, 90 ORFS/ORB	
13	2131210	1	Fitting, 90 ORFS/ORB	
14	2131212	1	Fitting, 90 ORFS/ORB	
15	2150808	1	Fitting, 45 ORFS/ORB	
16	2151212	1	Fitting, 45 ORFS/ORB	
17	2220478	1	Flange Kit	
18	1001110604	1	Flange Kit	
19	2130812	1	Fitting, 90 ORFS/ORB	
20	2753546	1	Hose	
21	2753975	1	Hose	
22	2753976	1	Hose	
23	2753977	1	Hose	
24	2753673	1	Hose	
25	2753979	2	Hose	
26	2753746	1	Hose	
27	2753590	1	Hose	
28	1001109439	1	Hose	
29	2753984	1	Hose	
30	2753988	1	Hose	
31	2753989	1	Hose	
32	2753990	1	Hose	
33	2753991	1	Hose	
34	2753992	1	Hose	
35	1001109468	1	Hose	
36	1001109470	1	Hose	
37	1001109471	1	Hose	
38	2753843	1	Hose	
39	2753999	1	Hose	
40	1001176982	1	Hose	
41	2754001	1	Hose	
42	2754004	1	Hose	
43	2754870	1	Hose	
44	1001109438	1	Hose	
45	1001109465	1	Hose	
46	1001173889	1	Tube	
47	4568849	1	Tube	
48	4568815	1	Tube	

ITEM	PART NUMBER	QTY	DESCRIPTION	REV
49	2111010	1	Fitting, Straight ORFS/ORB	
50	2111012	3	Fitting, Straight ORFS/ORB	
51	2170308	1	Fitting, Tee ORFS/ORFS/ORB	
52	2170908	1	Fitting, Cap ORFS	
53	2220811	1	Fitting, Reducer ORB/ORB	
54	2131620	1	Fitting, 90 ORFS/ORB	
55	2132020	1	Fitting, 90 ORFS/ORB	
56	1001173890	1	Hose	
57	2111616	1	Fitting, Straight ORFS/ORB	
58	2110812	1	Fitting, Straight ORFS/ORB	
59	1001104577	1	Hose	
60	1001119296	1	Hose	
61	2130404	1	Fitting, 90 ORFS/ORB	
62	2110808	1	Fitting, Straight ORFS/ORB	
63	2170712	1	Fitting, Tee ORFS/FSORFS/ORFS	
64	2221221	1	Fitting, Straight ORFS/FSORFS	
65	2110406	1	Fitting, Straight ORFS/ORB	
66	1001103977	1 in/ 2.54cm	Hose	

FIGURE 7-12. HYDRAULIC DIAGRAM - AUXILIARY POWER MOTOR

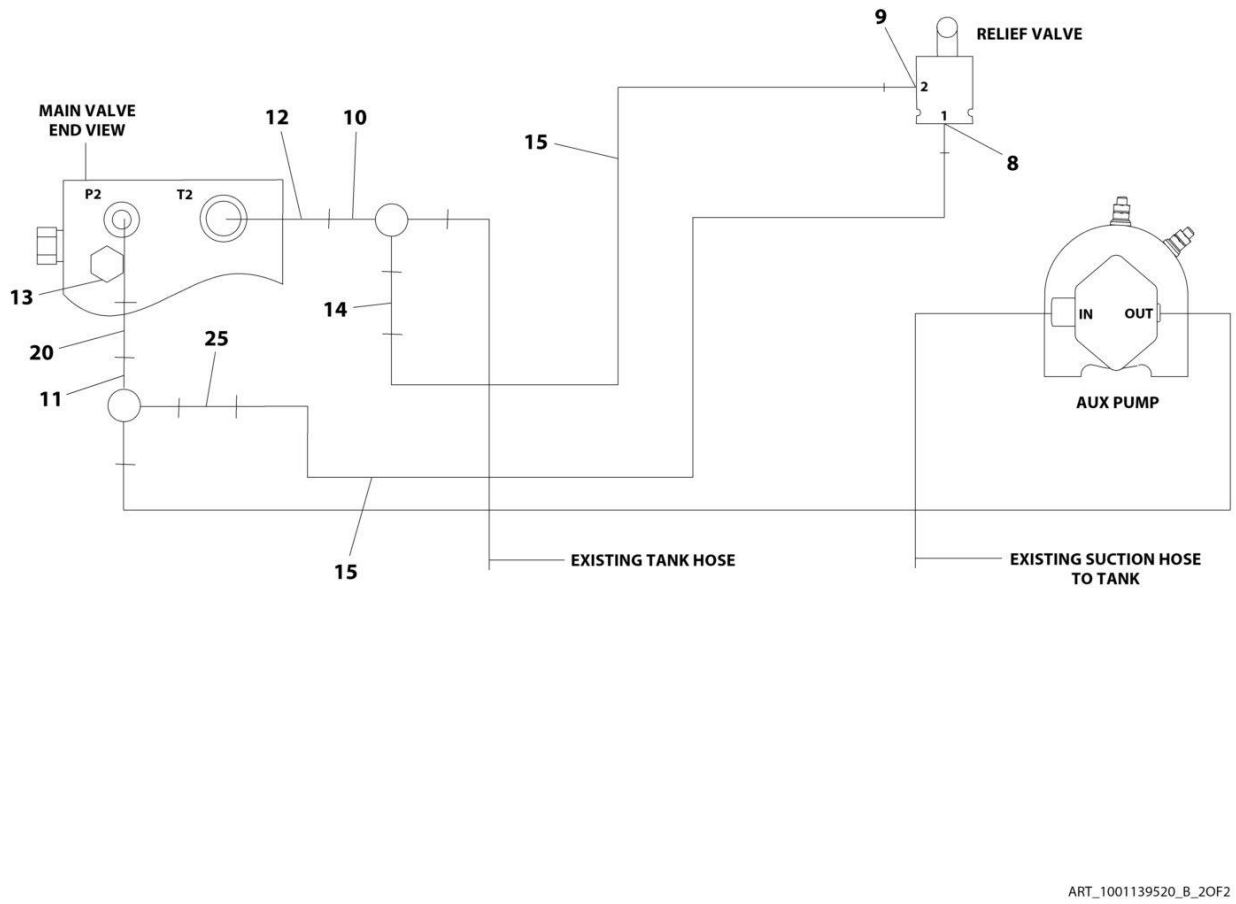

ART_1001139520_B_2OF2

FIGURE 7-12. HYDRAULIC DIAGRAM - AUXILIARY POWER MOTOR

ITEM	PART NUMBER	QTY	DESCRIPTION	REV
	1001139520	Ref	HYDRAULIC DIAGRAM - AUXILIARY POWER MOTOR	B
8	2110406	1	Fitting, Straight ORFS/ORB	
9	2130406	1	Fitting, 90 ORFS/ORB	
10	2170312	1	Fitting, Tee ORFS	
11	2170506	1	Fitting, Tee ORFS/ORFS/ORFS	
12	2220550	1	Fitting, Straight SFORB/ORB	
13	2221123	1	Fitting, Straight S FSORFS/ORB	
14	2221221	1	Fitting, Straight ORFS/FSORFS	
15	2753781	2	Hose	
20	4641316	1	Valve, Check	
25	1001092764	1	Fitting, Tube End Reducer	

SECTION 8 - ELECTRICAL

FIGURE 8-1. AC BOX AT PLATFORM - 110V GFI RECEPTACLE (ANSI SPECS)

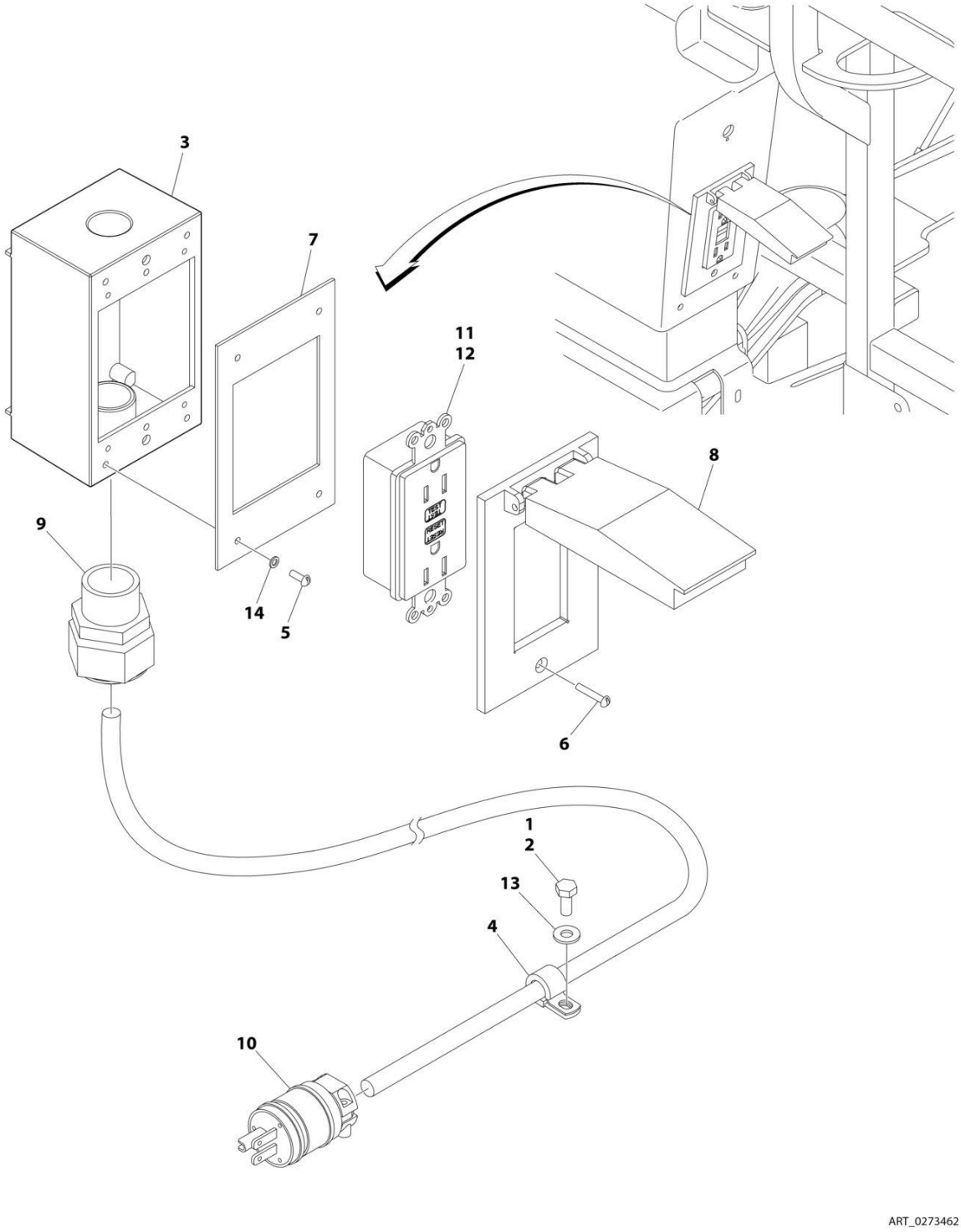

FIGURE 8-1. AC BOX AT PLATFORM - 110V GFI RECEPTACLE (ANSI SPECS)

ITEM	PART NUMBER	QTY	DESCRIPTION	REV
	0273462	Ref	AC BOX AT PLATFORM - 110V GFI RECEPTACLE	B
1	0100011	AR	Compound, Locking	
2	0641405	1	Bolt 1/4 x 5/8	
3	0860038	1	Box, Switch	
4	1320041	1	Clamp	
5	3910606	4	Screw #6 x 3/8	
6	3910612	2	Screw #6 x 3/4	
7	3960422	1	Gasket, AC Receptacle	
8	1001110873	1	Shield, Receptacle Cover	
9	4460051	1	Connector, Strain Relief	
10	4460205	1	Plug, Male	
11	4460315	1	Terminal, Spade	
12	4460346	1	Terminal, Receptacle	
13	4711400	1	Washer 1/4	
14	4760600	4	Washer #6	

FIGURE 8-2. AC BOX AT PLATFORM - 220V GFI RECEPTACLE (ANSI SPECS)

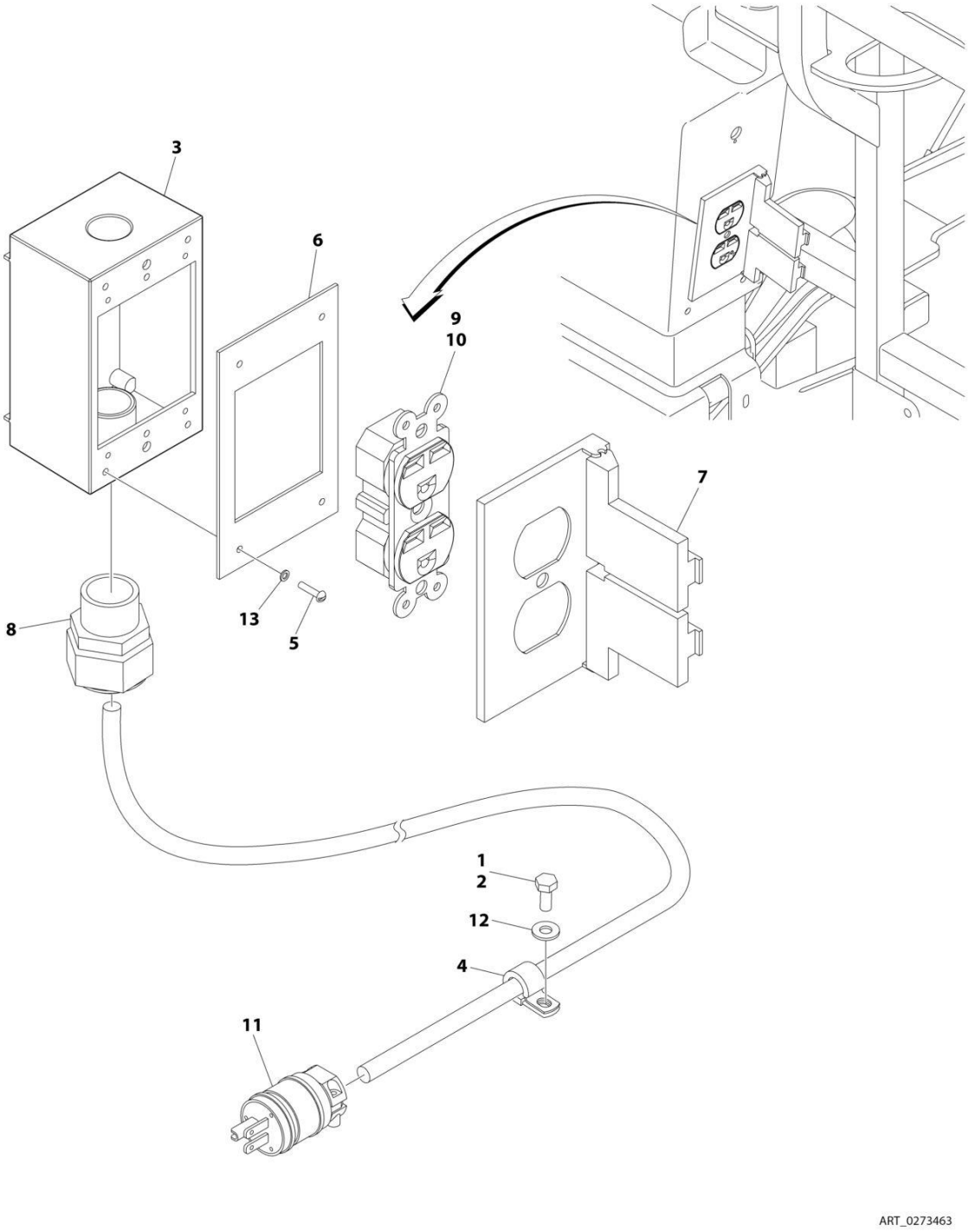

FIGURE 8-2. AC BOX AT PLATFORM - 220V GFI RECEPTACLE (ANSI SPECS)

ITEM	PART NUMBER	QTY	DESCRIPTION	REV
	0273463	Ref	AC BOX AT PLATFORM - 220V GFI RECEPTACLE	A
1	0100011	AR	Compound, Locking	
2	0641405	1	Bolt 1/4 x 5/8	
3	0860038	1	Box, Switch	
4	1320041	1	Clamp	
5	3910606	4	Screw #6 x 3/8	
6	3960422	1	Gasket, AC Receptacle	
7	4060092	1	Shield, Receptacle Cover	
8	4460051	1	Connector, Strain Relief	
9	4460125	1	Terminal, Receptacle	
10	4460315	1	Terminal, Spade	
11	4460709	1	Plug, Male	
12	4711400	1	Washer 1/4	
13	4760600	4	Washer #6	

FIGURE 8-3. AC BOX AT PLATFORM INSTALLATION - BOX WITH COVER (2X4 BOX) WITH 4000W GENERATOR (ANSI EXPORT, AUSTRALIAN, JAPANESE, CE & UK CA SPECS)

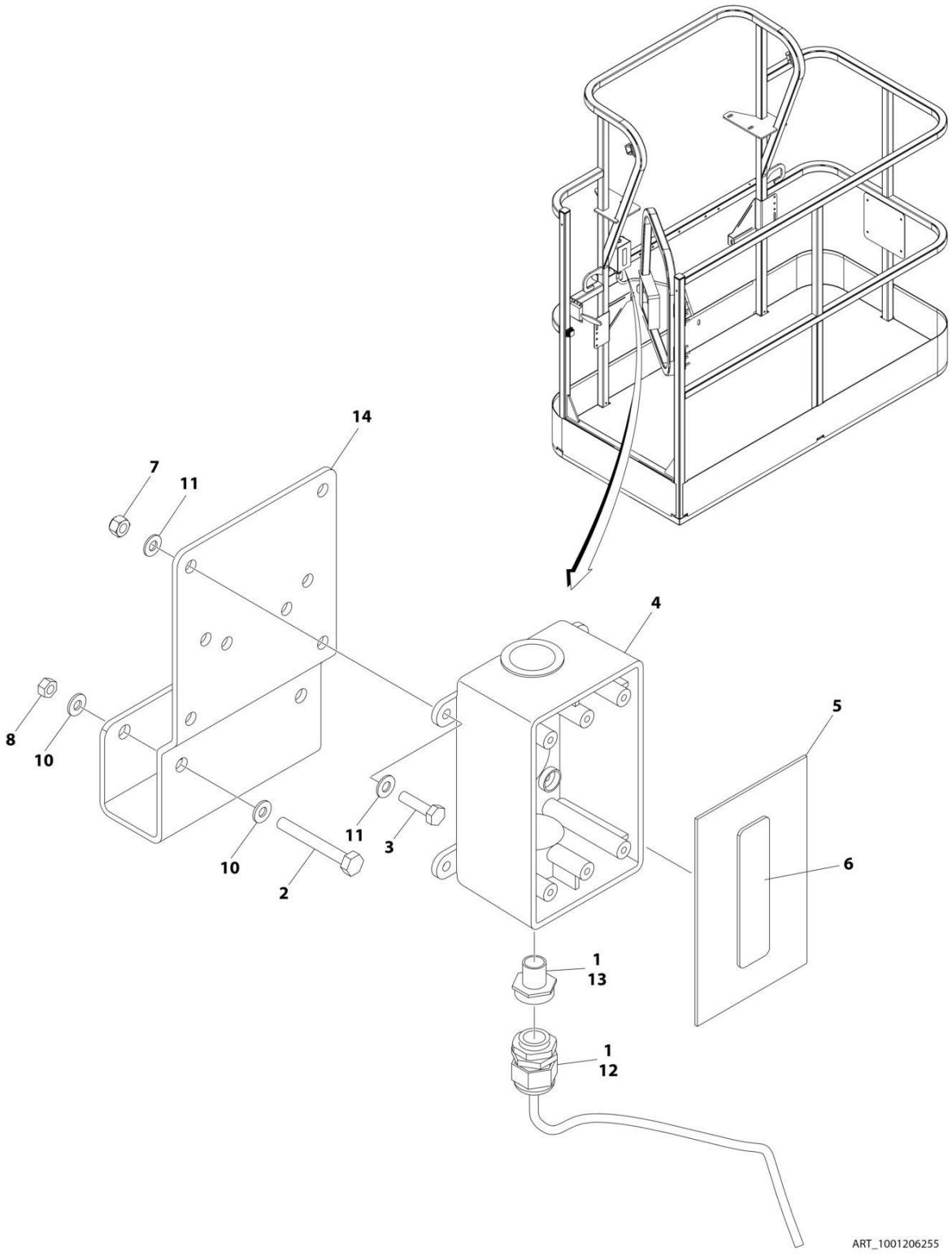

FIGURE 8-3. AC BOX AT PLATFORM INSTALLATION - BOX WITH COVER (2X4 BOX) WITH 4000W GENERATOR (ANSI EXPORT, AUSTRALIAN, JAPANESE, CE & UK CA SPECS)

ITEM	PART NUMBER	QTY	DESCRIPTION	REV
	1001206255	Ref	AC BOX AT PLATFORM INSTALLATION - BOX WITH COVER (2X4 BOX) WITH 4000W GENERATOR	A
1	0100020	AR	Sealant, Pipe	
2	0641416	2	Bolt 1/4 x 2	
3	0700408	4	Bolt M4 x 16	
4	0861731	1	Box, Switch	
5	1670603	1	Cover	
6	3251242	1	Decal - 240V-50Hz	
7	3290405	4	Nut M4	
8	3311405	2	Nut 1/4	
10	4711400	4	Washer 1/4	
11	4811400	8	Washer M4	
12	1001101191	1	Connector, Strain Relief	
13	1001101197	1	Adapter	
14	1001193018	1	Bracket, AC Receptacle	

FIGURE 8-4. AC BOX AT PLATFORM INSTALLATION - 110V IEC 60309 YELLOW WITHOUT 2500W GENERATOR (CE & UK CA SPECS)

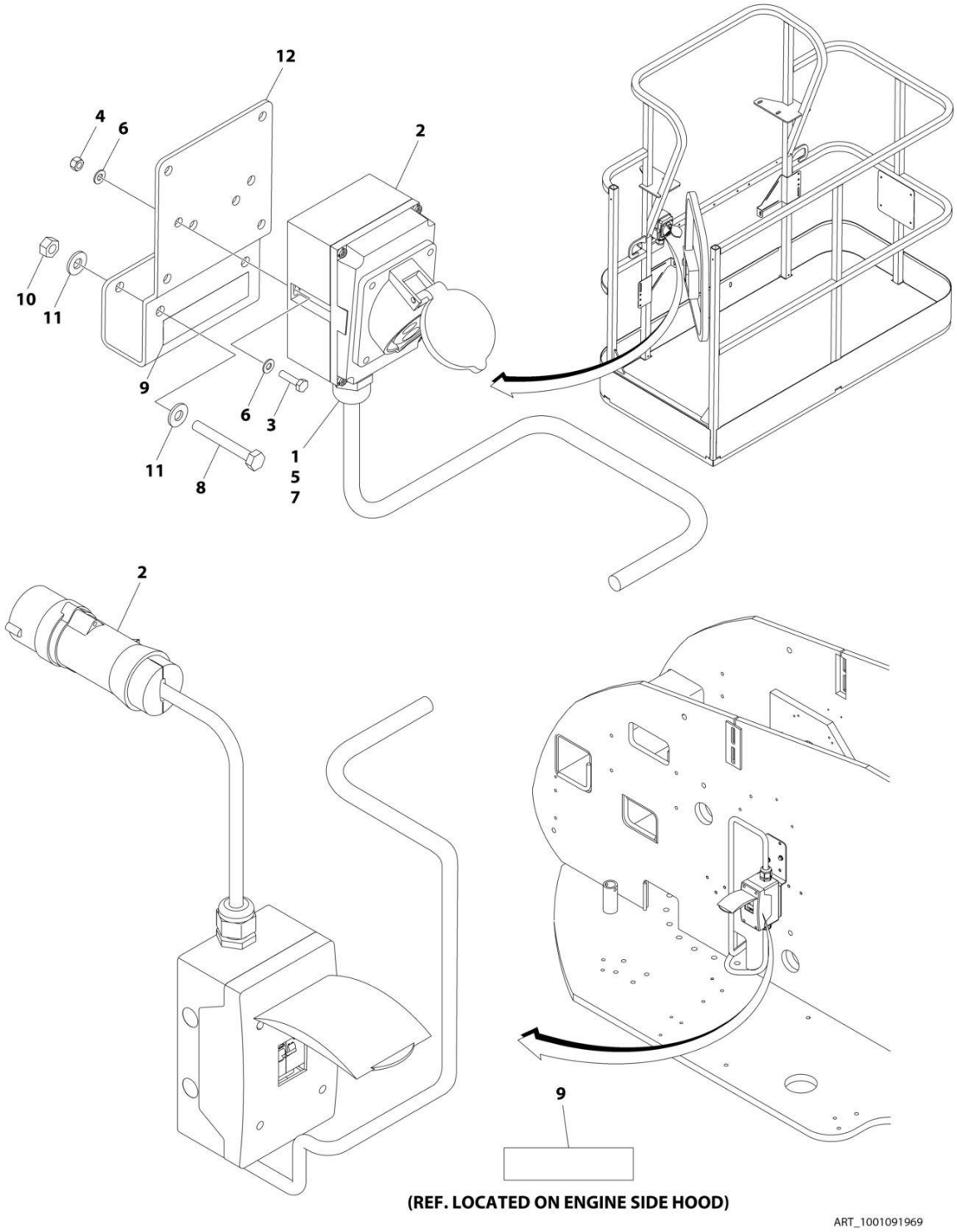

FIGURE 8-4. AC BOX AT PLATFORM INSTALLATION - 110V IEC 60309 YELLOW WITHOUT 2500W GENERATOR (CE & UK CA SPECS)

ITEM	PART NUMBER	QTY	DESCRIPTION	REV
	1001091969	Ref	AC BOX AT PLATFORM INSTALLATION - 110V IEC YELLOW	D
1	0100020	AR	Sealant, Pipe	
2	0275216	1	Receptacle Box Kit (See Separate Breakdown in this Section)	
3	0700408	2	Bolt M4 x 16	
4	3290405	2	Nut M4	
5	1001101196	1	Adapter	
6	4811400	4	Washer M4	
7	1001101191	1	Connector, Strain Relief	
8	0641416	2	Bolt 1/4 x 2	
9	1705325	2	Decal - 110V	
10	3311405	2	Nut 1/4	
11	4711400	4	Washer 1/4	
12	1001193018	1	Bracket	

FIGURE 8-5. AC BOX AT PLATFORM INSTALLATION - 110V IEC 60309 YELLOW WITH 2500W GENERATOR (CE & UK CA SPECS)

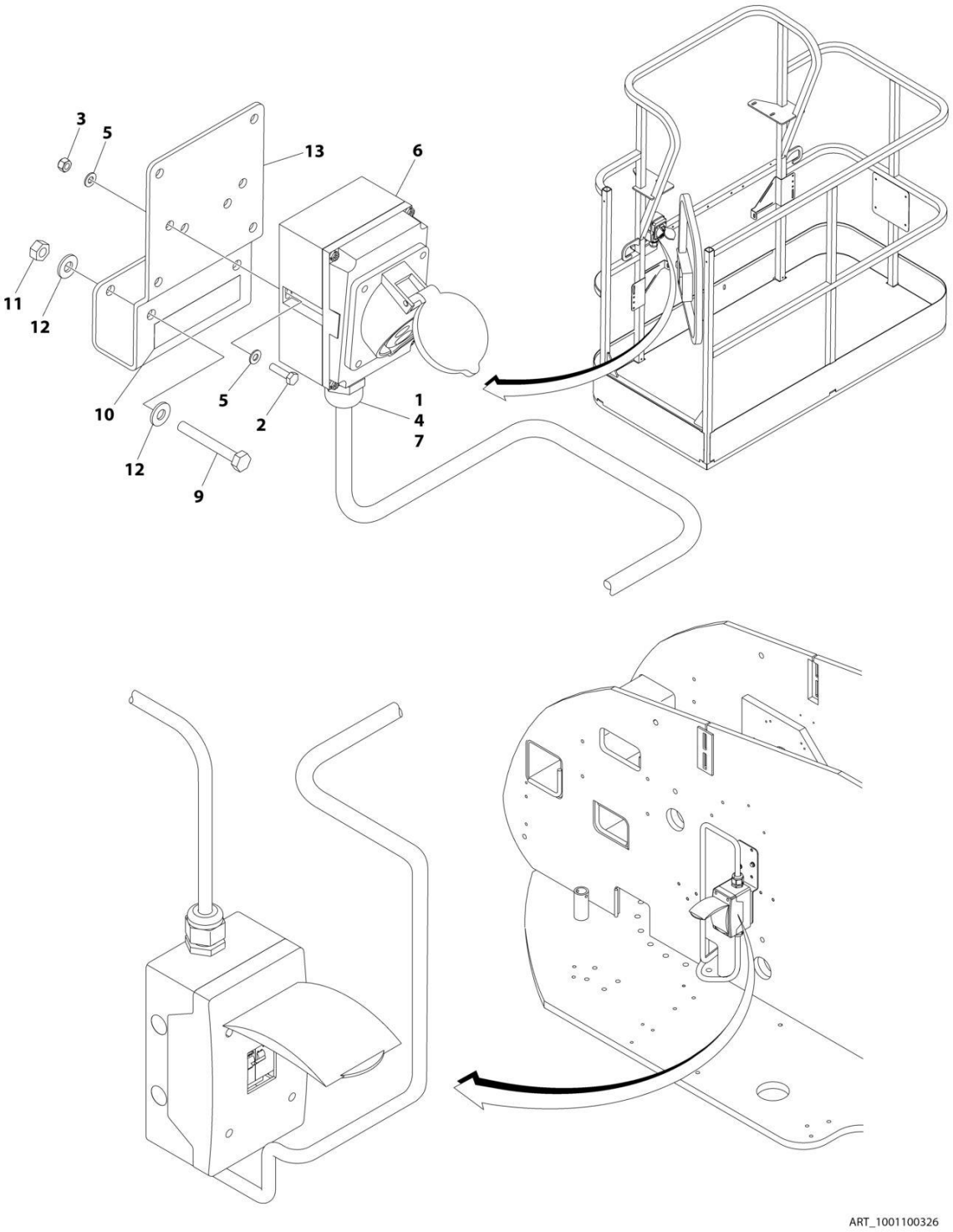

FIGURE 8-5. AC BOX AT PLATFORM INSTALLATION - 110V IEC 60309 YELLOW WITH 2500W GENERATOR (CE & UK CA SPECS)

ITEM	PART NUMBER	QTY	DESCRIPTION	REV
	1001100326	Ref	AC BOX AT PLATFORM INSTALLATION - 110V IEC 60309 YELLOW	D
1	0100020	AR	Sealant, Pipe	
2	0700408	2	Bolt M4 x 16	
3	3290405	2	Nut M4	
4	1001101196	1	Adapter	
5	4811400	4	Washer M4	
6	1001100341	1	Receptacle Box Kit (See Separate Breakdown in this Section)	
7	1001101191	1	Connector, Strain Relief	
8	1060908	10 ft /3.05m	Cable, Electrical 12/3 (Not Shown)	
9	0641416	2	Bolt 1/4 x 2	
10	1705325	1	Decal - 110V	
11	3311405	2	Nut 1/4	
12	4711400	4	Washer 1/4	
13	1001193018	1	Bracket	

FIGURE 8-6. AC BOX AT PLATFORM INSTALLATION - 110V IEC 60309 YELLOW WITH 4000W GENERATOR (CE & UK CA SPECS)

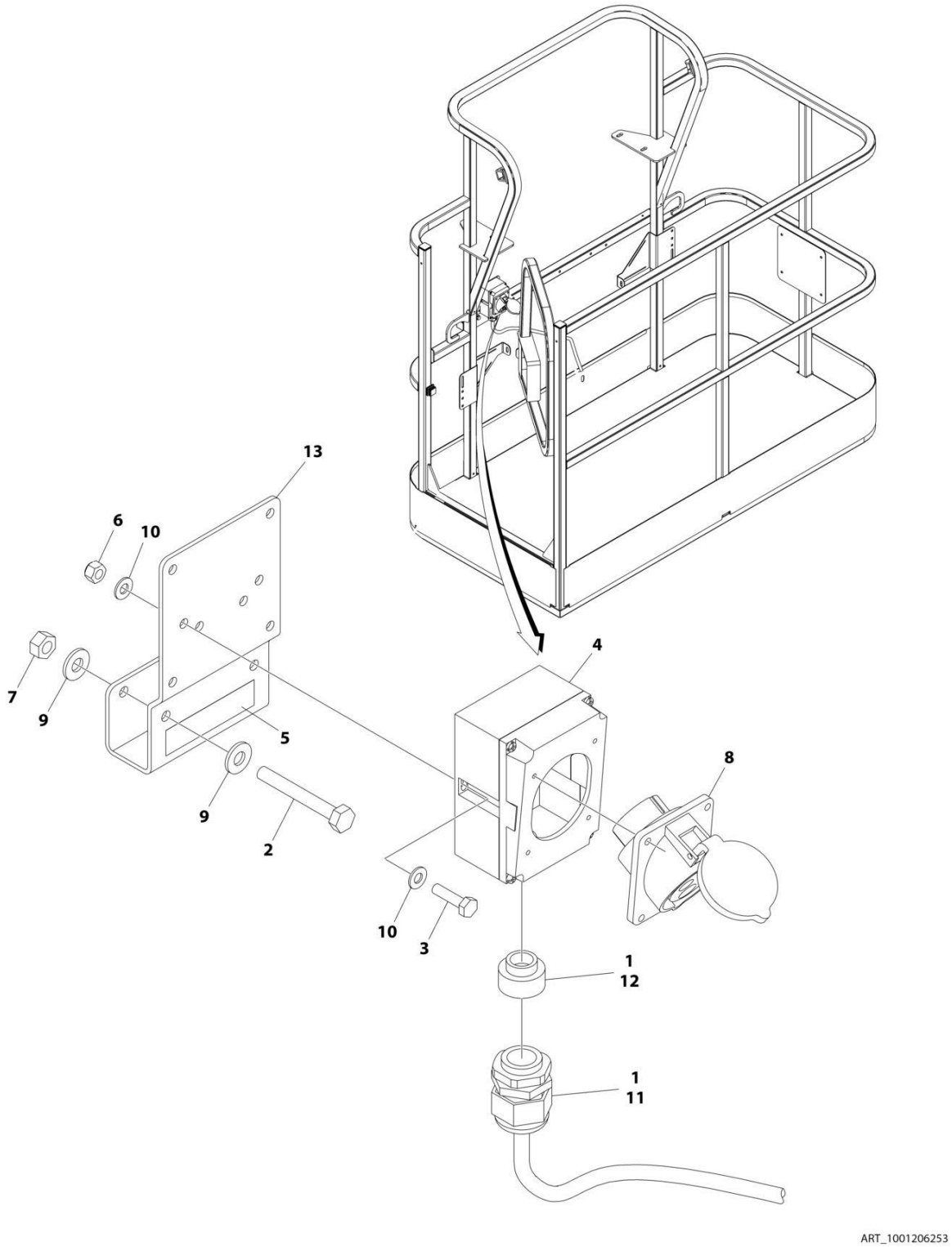

FIGURE 8-6. AC BOX AT PLATFORM INSTALLATION - 110V IEC 60309 YELLOW WITH 4000W GENERATOR (CE & UK CA SPECS)

ITEM	PART NUMBER	QTY	DESCRIPTION	REV
	1001206253	Ref	AC BOX AT PLATFORM INSTALLATION - 110V IEC 60309 YELLOW WITHOUT 4000W GENERATOR	A
1	0100020	AR	Sealant, Pipe	
2	0641416	2	Bolt 1/4 x 2	
3	0700408	2	Bolt M4 x 16	
4	0861781	1	Box, Switch	
5	1705325	1	Decal - 110V	
6	3290405	2	Nut M4	
7	3311405	2	Nut 1/4	
8	4461198	1	Receptacle	
9	4711400	4	Washer 1/4	
10	4811400	4	Washer M4	
11	1001101191	1	Connector, Strain Relief	
12	1001101196	1	Adapter	
13	1001193018	1	Bracket, AC Receptacle	

FIGURE 8-7. AC BOX AT PLATFORM INSTALLATION - 220V IEC 60309 BLUE WITHOUT 2500W GENERATOR (CE & UK CA SPECS)

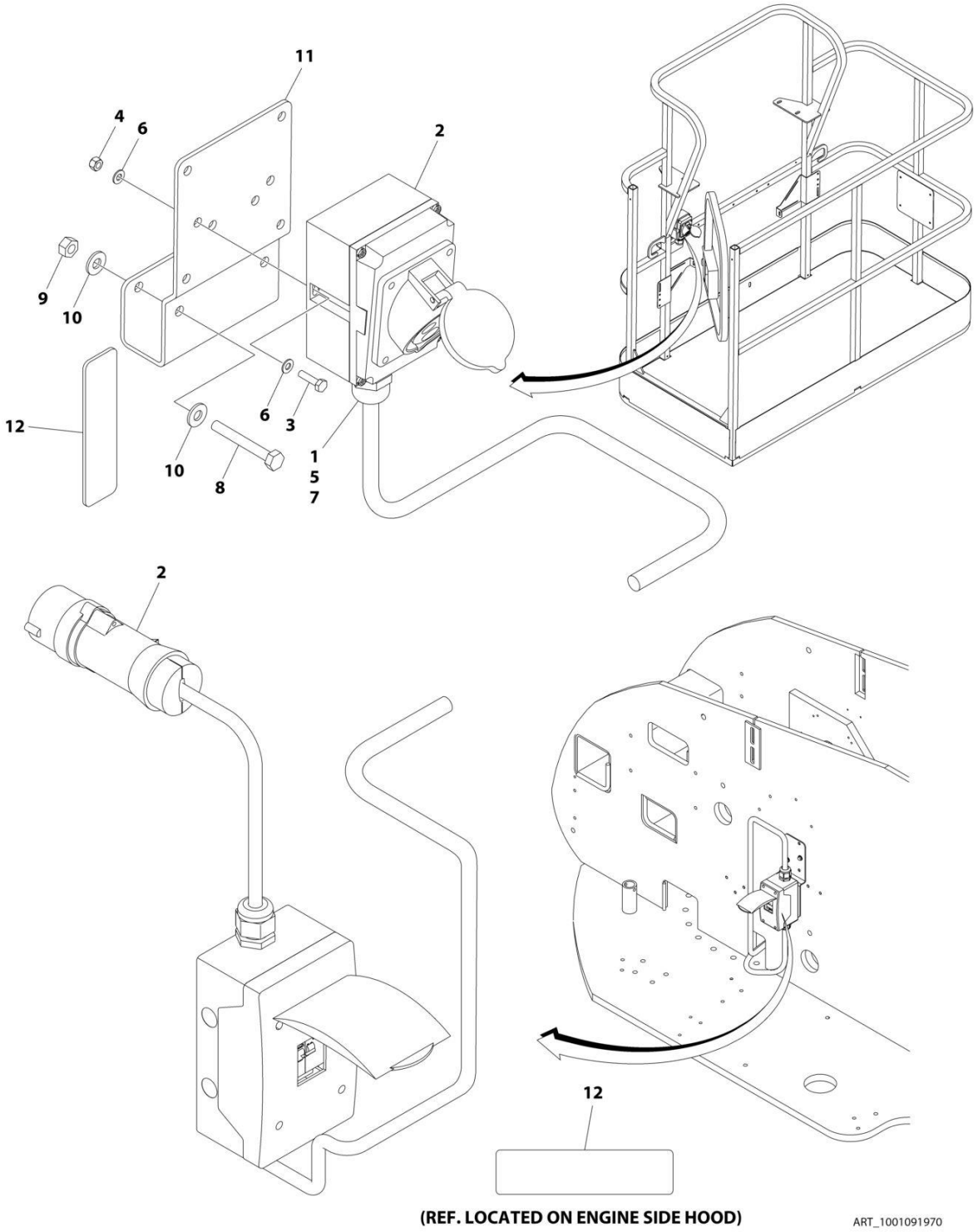

FIGURE 8-7. AC BOX AT PLATFORM INSTALLATION - 220V IEC 60309 BLUE WITHOUT 2500W GENERATOR (CE & UK CA SPECS)

ITEM	PART NUMBER	QTY	DESCRIPTION	REV
	1001091970	Ref	AC BOX AT PLATFORM INSTALLATION - 220V IEC BLUE	D
1	0100020	AR	Sealant, Pipe	
2	0275217	1	Receptacle Box Kit (See Separate Breakdown in this Section)	
3	0700408	2	Bolt M4 x 16	
4	3290405	2	Nut M4	
5	1001101196	1	Adapter	
6	4811400	4	Washer M4	
7	1001101191	1	Connector, Strain Relief	
8	0641416	2	Bolt 1/4 x 2	
9	3311405	2	Nut 1/4	
10	4711400	4	Washer 1/4	
11	1001193018	1	Bracket	
12	3251242	2	Decal - 240V/50Hz	

FIGURE 8-8. AC BOX AT PLATFORM INSTALLATION - 220V IEC 60309 BLUE WITH 2500W GENERATOR (CE & UK CA SPECS)

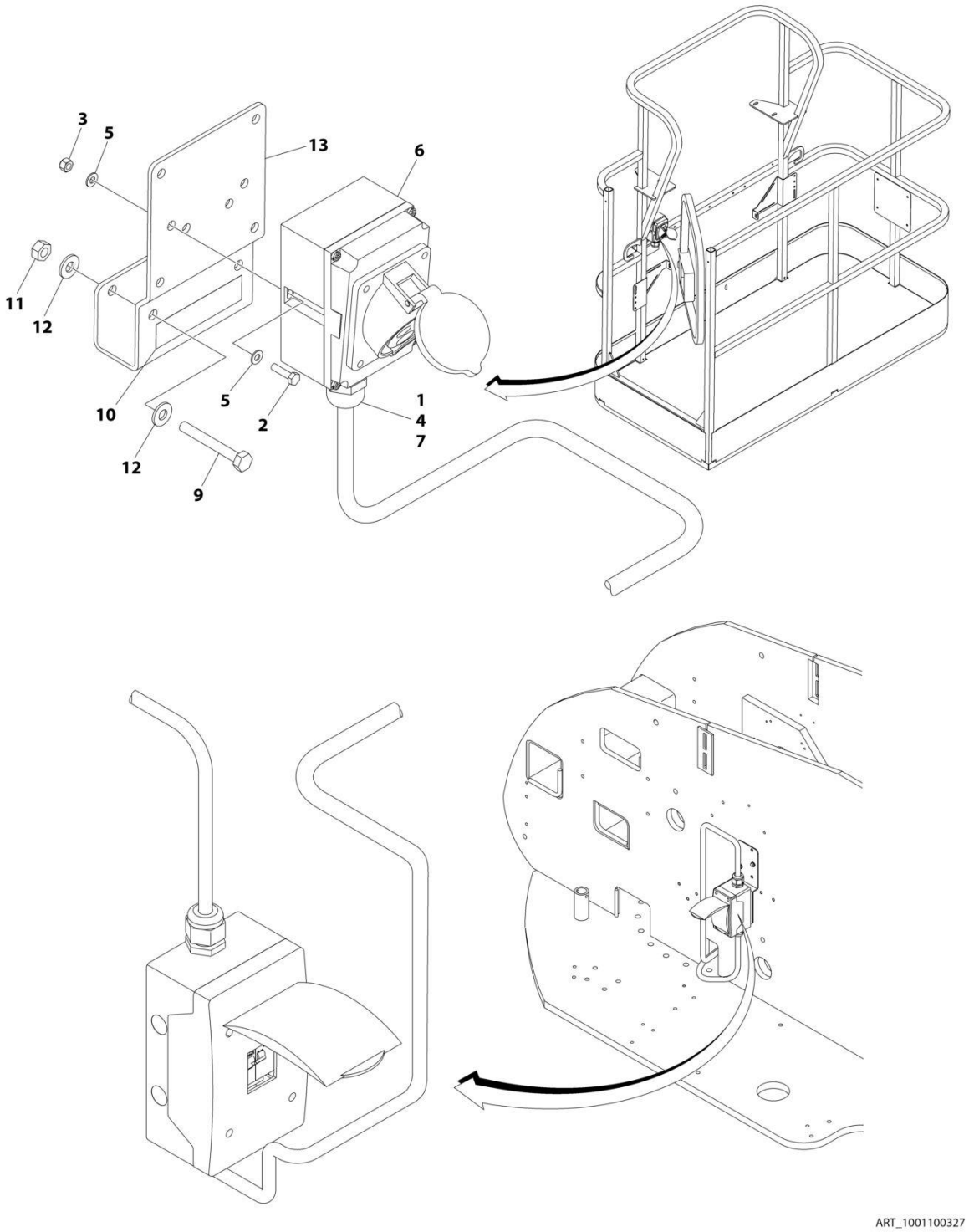

FIGURE 8-8. AC BOX AT PLATFORM INSTALLATION - 220V IEC 60309 BLUE WITH 2500W GENERATOR (CE & UK CA SPECS)

ITEM	PART NUMBER	QTY	DESCRIPTION	REV
	1001100327	Ref	AC BOX AT PLATFORM INSTALLATION - 220V IEC 60309 BLUE	D
1	0100020	AR	Sealant, Pipe	
2	0700408	2	Bolt M4 x 16	
3	3290405	2	Nut M4	
4	1001101196	1	Adapter	
5	4811400	4	Washer M4	
6	1001100342	1	Receptacle Box Kit (See Separate Breakdown in this Section)	
7	1001101191	1	Connector, Strain Relief	
8	1060908	10 ft /3.05m	Cable, Electrical 12/3 (Not Shown)	
9	0641416	2	Bolt 1/4 x 2	
10	3252507	1	Decal - 220V	
11	3311405	2	Nut 1/4	
12	4711400	4	Washer 1/4	
13	1001193018	1	Bracket	

FIGURE 8-9. AC BOX AT PLATFORM INSTALLATION - 220V IEC 60309 BLUE WITH 4000W GENERATOR (CE & UK CA SPECS)

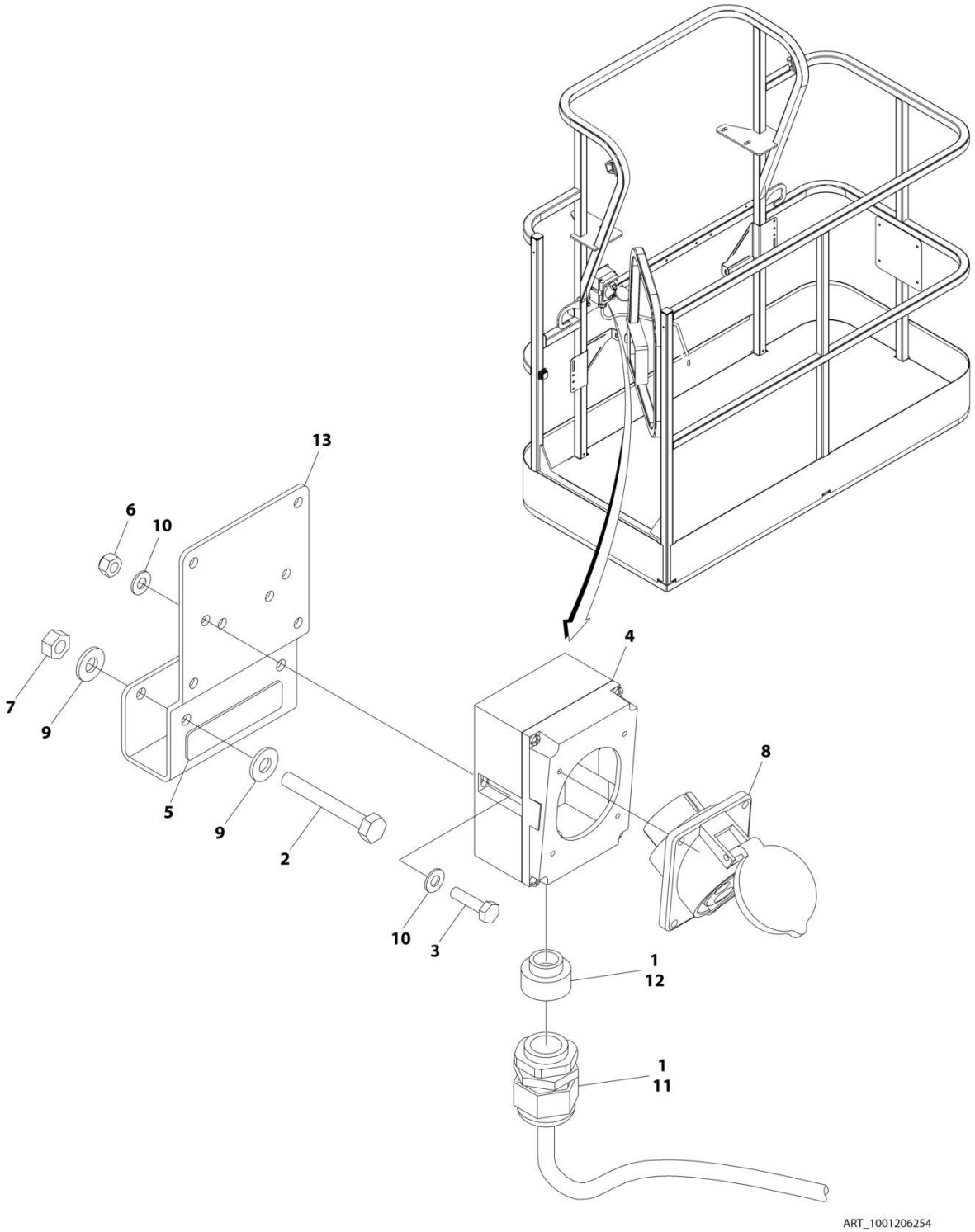

FIGURE 8-9. AC BOX AT PLATFORM INSTALLATION - 220V IEC 60309 BLUE WITH 4000W GENERATOR (CE & UK CA SPECS)

ITEM	PART NUMBER	QTY	DESCRIPTION	REV
	1001206254	Ref	AC BOX AT PLATFORM INSTALLATION - 220V IEC BLUE	A
1	0100020	AR	Sealant, Pipe	
2	0641416	2	Bolt 1/4 x 2	
3	0700408	2	Bolt M4 x 16	
4	0861781	1	Box, Switch	
5	3251242	1	Decal - 240V/50Hz	
6	3290405	2	Nut M4	
7	3311405	2	Nut 1/4	
8	4461201	1	Receptacle	
9	4711400	4	Washer 1/4	
10	4811400	4	Washer M4	
11	1001101191	1	Connector, Strain Relief	
12	1001101196	1	Adapter	
13	1001193018	1	Bracket, AC Receptacle	

FIGURE 8-10. AC BOX AT PLATFORM INSTALLATION - 220V CEE7 POST GROUND (2X4 BOX) WITHOUT 2500W GENERATOR (CE & UK CA SPECS)

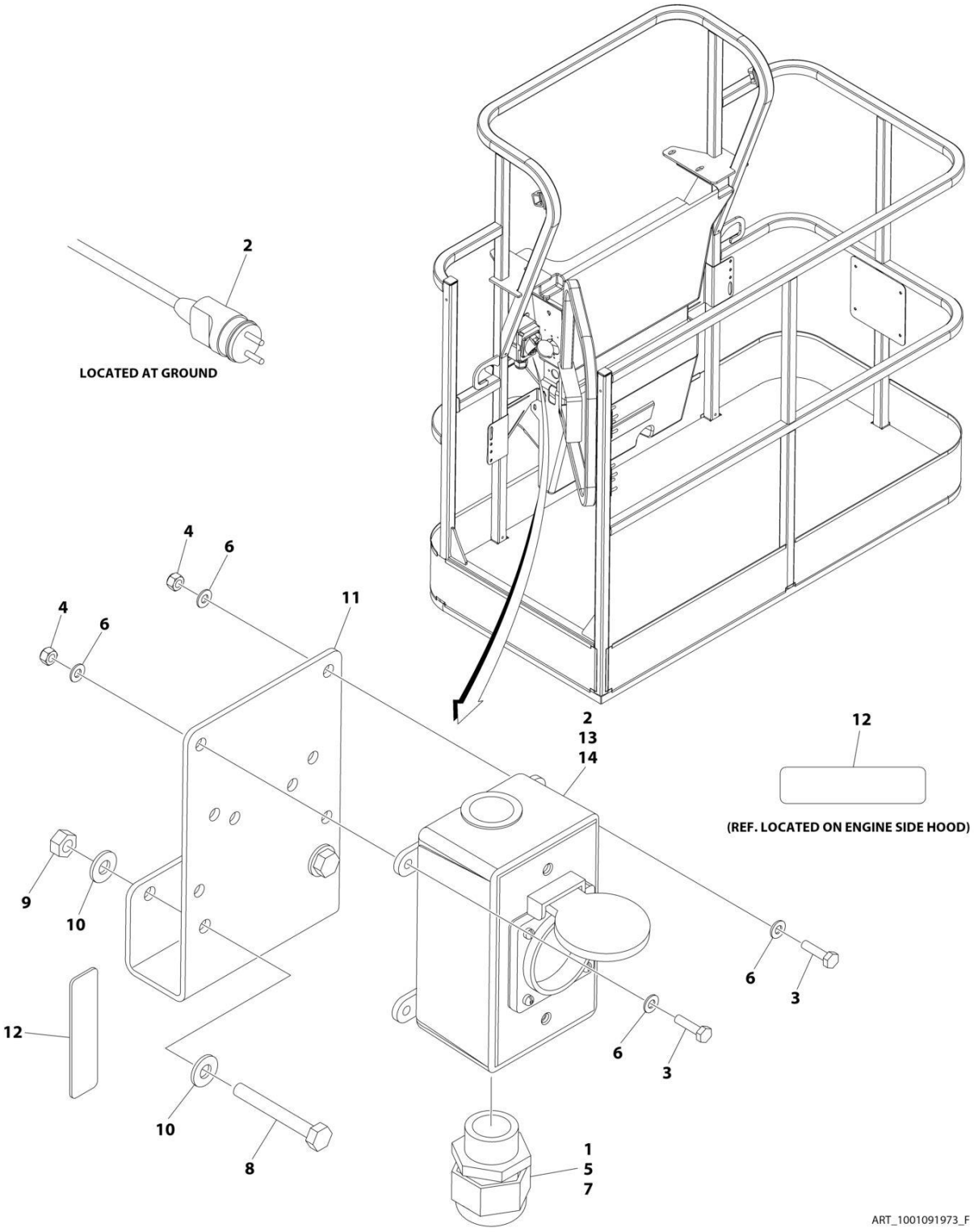

FIGURE 8-10. AC BOX AT PLATFORM INSTALLATION - 220V CEE7 POST GROUND (2X4 BOX) WITHOUT 2500W GENERATOR (CE & UK CA SPECS)

ITEM	PART NUMBER	QTY	DESCRIPTION	REV
	1001091973	Ref	AC BOX AT PLATFORM INSTALLATION - 220V CEE7 2X4 BOX POST GROUND	F
1	0100020	AR	Sealant, Pipe	
2	0275452	1	Receptacle Box Kit (See Separate Breakdown in this Section)	
3	0700408	4	Bolt M4 x 16	
4	3290405	4	Nut M4	
5	1001101197	1	Adapter	
6	4811400	8	Washer M4	
7	1001101191	1	Connector, Strain Relief	
8	0641416	2	Bolt 1/4 x 2	
9	3311405	2	Nut 1/4	
10	4711400	4	Washer 1/4	
11	1001193018	1	Bracket	
12	3251242	2	Decal - 240V/50Hz	
13	4460806	2	Terminal, Fork (Not Shown)	
14	1001205958	1	Terminal (Not Shown)	

FIGURE 8-11. AC BOX AT PLATFORM INSTALLATION - 220V CEE7 POST GROUND (2X4 BOX) WITH 2500W GENERATOR (CE & UK CA SPECS)

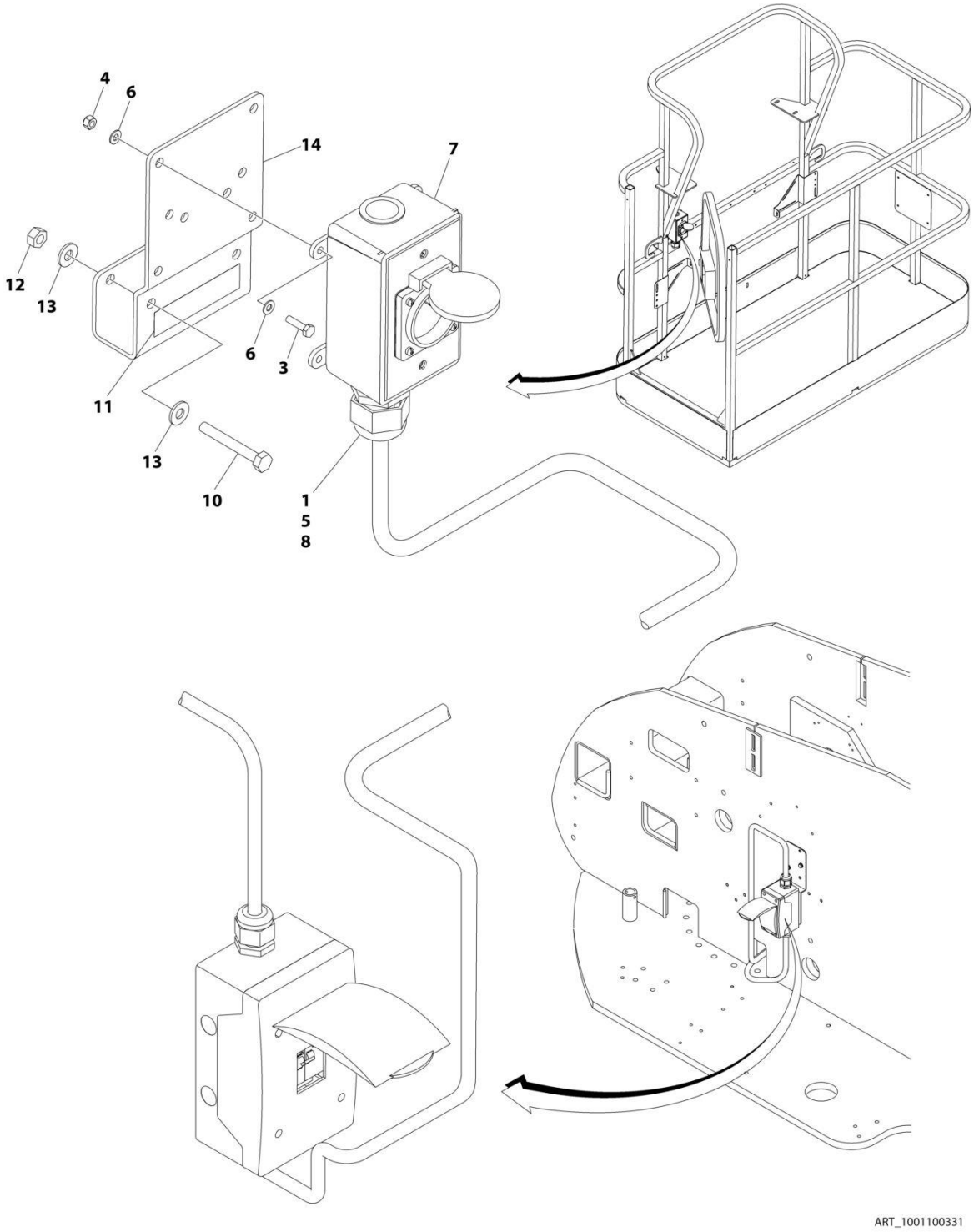

FIGURE 8-11. AC BOX AT PLATFORM INSTALLATION - 220V CEE7 POST GROUND (2X4 BOX) WITH 2500W GENERATOR (CE & UK CA SPECS)

ITEM	PART NUMBER	QTY	DESCRIPTION	REV
	1001100331	Ref	AC BOX AT PLATFORM INSTALLATION - 220V CEE7 POST GROUND (2X4 BOX)	E
1	0100020	AR	Sealant, Pipe	
3	0700408	4	Bolt M4 x 16	
4	3290405	4	Nut M4	
5	1001101197	1	Adapter	
6	4811400	8	Washer M4	
7	1001100345	1	Receptacle Box Kit (See Separate Breakdown in this Section)	
8	1001101191	1	Connector, Strain Relief	
9	1060908	10 ft /3.05m	Cable, Electrical 12/3 (Not Shown)	
10	0641416	2	Bolt 1/4 x 2	
11	3252507	1	Decal - 220V	
12	3311405	2	Nut 1/4	
13	4711400	4	Washer 1/4	
14	1001193018	1	Bracket	
15	4460806	2	Terminal, Fork (Not Shown)	
16	1001205958	1	Terminal (Not Shown)	

FIGURE 8-12. AC BOX AT PLATFORM INSTALLATION - 220V CEE7 POST GROUND (2X4 BOX) WITH 4000W GENERATOR (CE & UK CA SPECS)

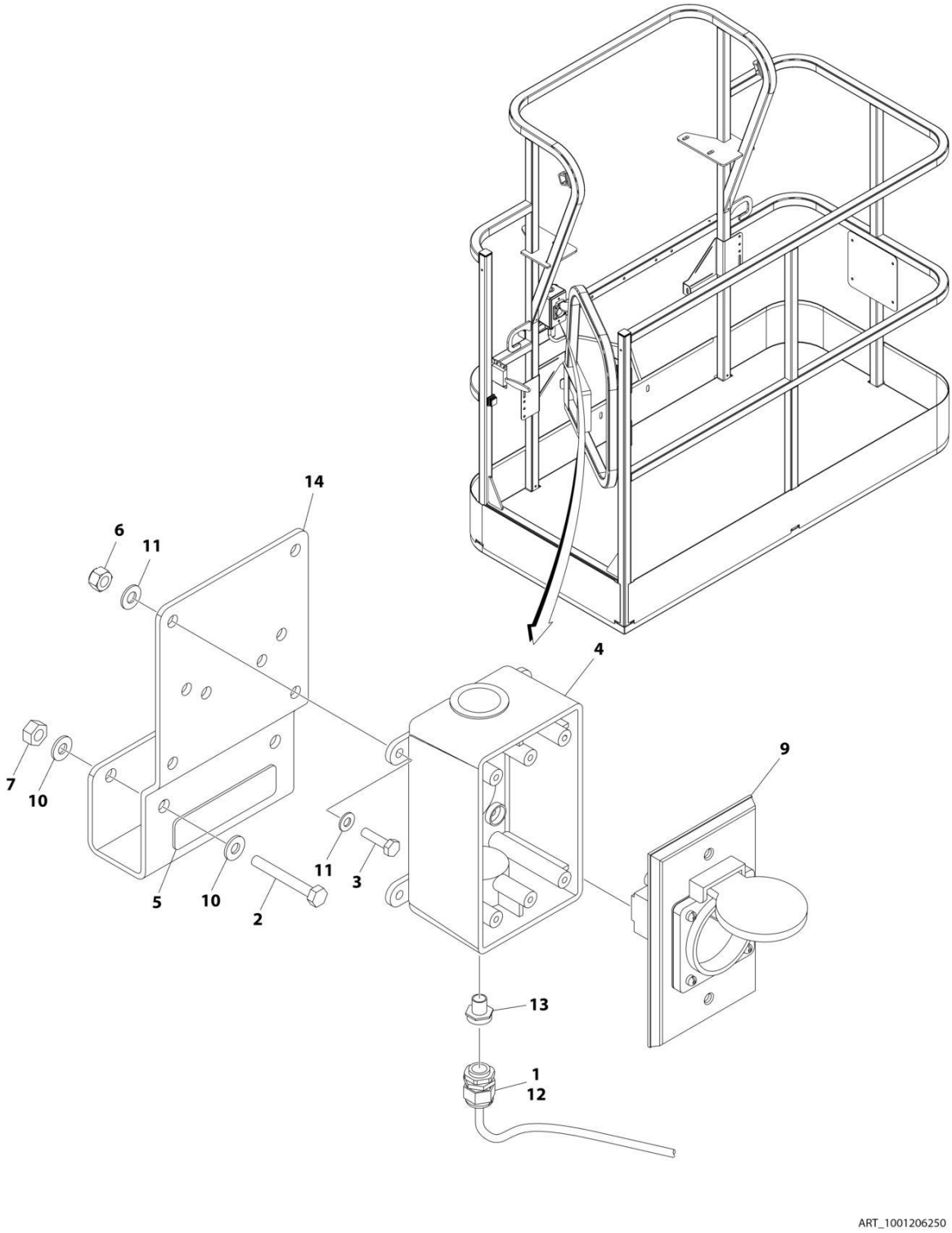

FIGURE 8-12. AC BOX AT PLATFORM INSTALLATION - 220V CEE7 POST GROUND (2X4 BOX) WITH 4000W GENERATOR (CE & UK CA SPECS)

ITEM	PART NUMBER	QTY	DESCRIPTION	REV
	1001206250	Ref	AC BOX AT PLATFORM INSTALLATION - 220V CEE7 2X4 BOX POST GROUND	A
1	0100020	AR	Sealant, Pipe	
2	0641416	2	Bolt 1/4 x 2	
3	0700408	4	Bolt M4 x 16	
4	0861731	1	Box, Switch	
5	3251242	1	Decal - 240V/50Hz	
6	3290405	4	Nut M4	
7	3311405	2	Nut 1/4	
8	4460806	2	Terminal, Fork (Not Shown)	
9	4461244	1	Receptacle	
10	4711400	4	Washer 1/4	
11	4811400	8	Washer M4	
12	1001101191	1	Connector, Strain Relief	
13	1001101197	1	Adapter	
14	1001193018	1	Bracket, AC Receptacle	
15	1001205958	1	Terminal (Not Shown)	

FIGURE 8-13. AC BOX AT PLATFORM INSTALLATION - 220V CEE7 SIDE GROUND (2X4 BOX) WITHOUT 2500W GENERATOR (CE & UK CA SPECS)

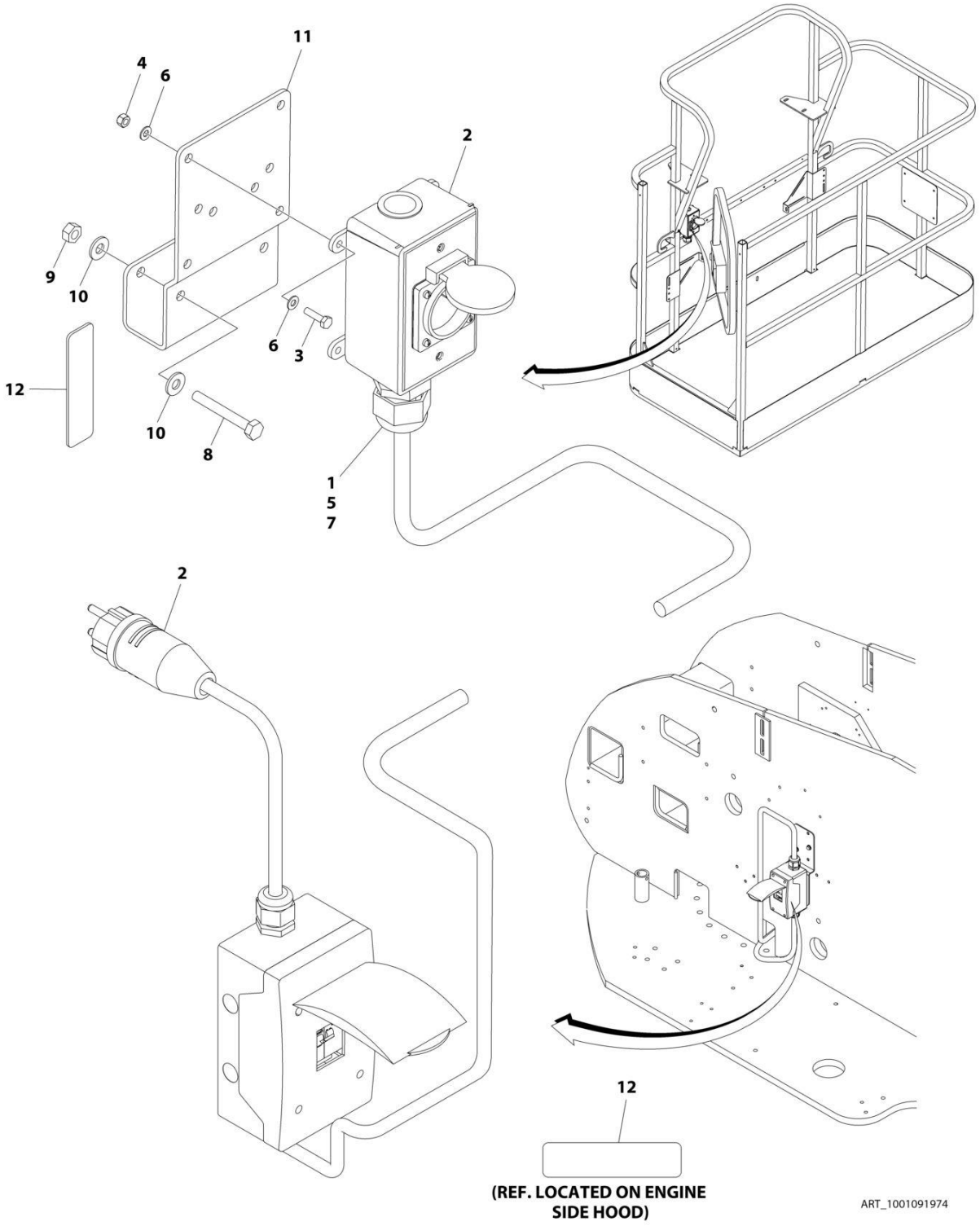

FIGURE 8-13. AC BOX AT PLATFORM INSTALLATION - 220V CEE7 SIDE GROUND (2X4 BOX) WITHOUT 2500W GENERATOR (CE & UK CA SPECS)

ITEM	PART NUMBER	QTY	DESCRIPTION	REV
	1001091974	Ref	AC BOX AT PLATFORM INSTALLATION - 220V CEE7 2X4 BOX SIDE GROUND	F
1	0100020	AR	Sealant, Pipe	
2	0275453	1	Receptacle Box Kit (See Separate Breakdown in this Section)	
3	0700408	4	Bolt M4 x 16	
4	3290405	4	Nut M4	
5	1001101197	1	Adapter	
6	4811400	8	Washer M4	
7	1001101191	1	Connector, Strain Relief	
8	0641416	2	Bolt 1/4 x 2	
9	3311405	2	Nut 1/4	
10	4711400	4	Washer 1/4	
11	1001193018	1	Bracket	
12	3251242	2	Decal - 240V/50Hz	
13	4460806	2	Terminal, Fork (Not Shown)	
14	1001205958	1	Terminal (Not Shown)	

FIGURE 8-14. AC BOX AT PLATFORM INSTALLATION - 220V CEE7 SIDE GROUND (2X4 BOX) WITH 2500W GENERATOR (CE & UK CA SPECS)

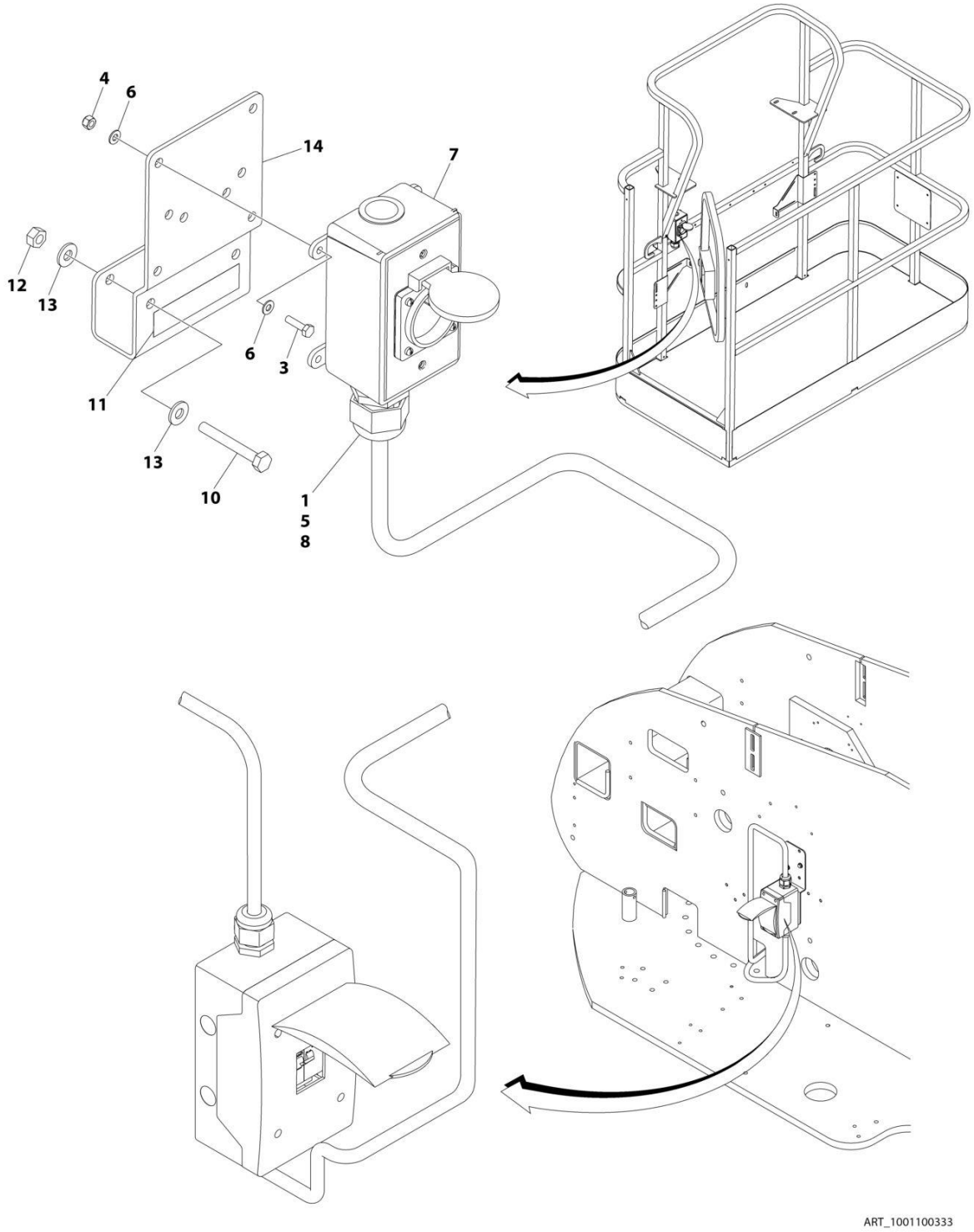

FIGURE 8-14. AC BOX AT PLATFORM INSTALLATION - 220V CEE7 SIDE GROUND (2X4 BOX) WITH 2500W GENERATOR (CE & UK CA SPECS)

ITEM	PART NUMBER	QTY	DESCRIPTION	REV
	1001100333	Ref	AC BOX AT PLATFORM INSTALLATION - 220V CEE7 SIDE GROUND (2X4 BOX)	E
1	0100020	AR	Sealant, Pipe	
3	0700408	4	Bolt M4 x 16	
4	3290405	4	Nut M4	
5	1001101197	1	Adapter	
6	4811400	8	Washer M4	
7	1001100347	1	Receptacle Box Kit (See Separate Breakdown in this Section)	
8	1001101191	1	Connector, Strain Relief	
9	1060908	10 ft /3.05m	Cable, Electrical 12/3 (Not Shown)	
10	0641416	2	Bolt 1/4 x 2	
11	3252507	1	Decal - 220V	
12	3311405	2	Nut 1/4	
13	4711400	4	Washer 1/4	
14	1001193018	1	Bracket	
15	4460806	2	Terminal, Fork (Not Shown)	
16	1001205958	1	Terminal (Not Shown)	

FIGURE 8-15. AC BOX AT PLATFORM INSTALLATION - 220V CEE7 SIDE GROUND (2X4 BOX) WITH 4000W GENERATOR (CE & UK CA SPECS)

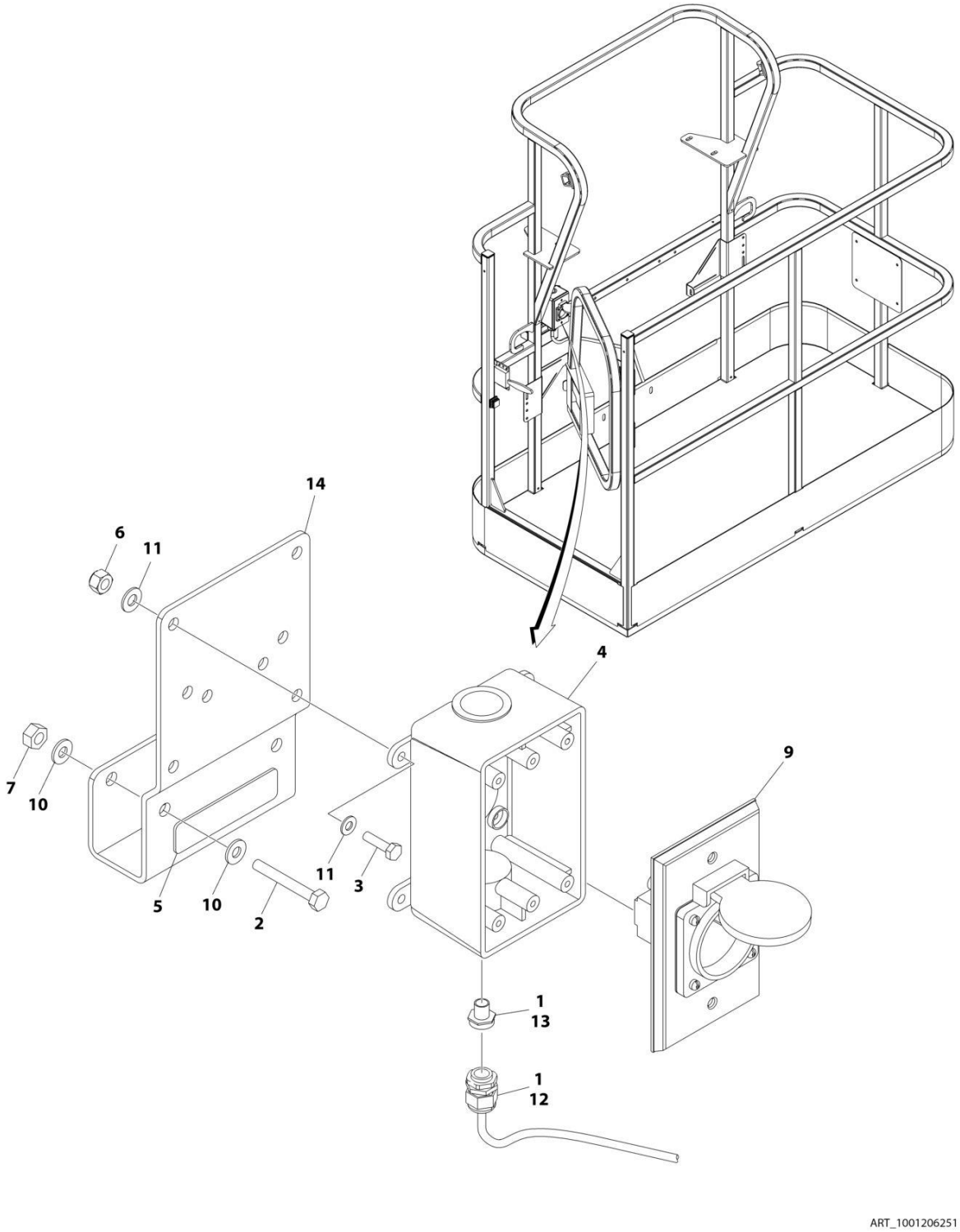

FIGURE 8-15. AC BOX AT PLATFORM INSTALLATION - 220V CEE7 SIDE GROUND (2X4 BOX) WITH 4000W GENERATOR (CE & UK CA SPECS)

ITEM	PART NUMBER	QTY	DESCRIPTION	REV
	1001206251	Ref	AC BOX AT PLATFORM INSTALLATION - 220V CEE7 2X4 BOX SIDE GROUND	A
1	0100020	AR	Sealant, Pipe	
2	0641416	2	Bolt 1/4 x 2	
3	0700408	4	Bolt M4 x 16	
4	0861731	1	Box, Switch	
5	3251242	1	Decal - 240V/50Hz	
6	3290405	4	Nut M4	
7	3311405	2	Nut 1/4	
8	4460806	2	Terminal, Fork (Not Shown)	
9	4461245	1	Receptacle	
10	4711400	4	Washer 1/4	
11	4811400	8	Washer M4	
12	1001101191	1	Connector, Strain Relief	
13	1001101197	1	Adapter	
14	1001193018	1	Bracket, AC Receptacle	
15	1001205958	1	Terminal (Not Shown)	

FIGURE 8-16. AC BOX AT PLATFORM INSTALLATION - 220V AFSINT 107 KEYED GROUND (2X4 BOX) WITHOUT 2500W GENERATOR (CE & UK CA SPECS)

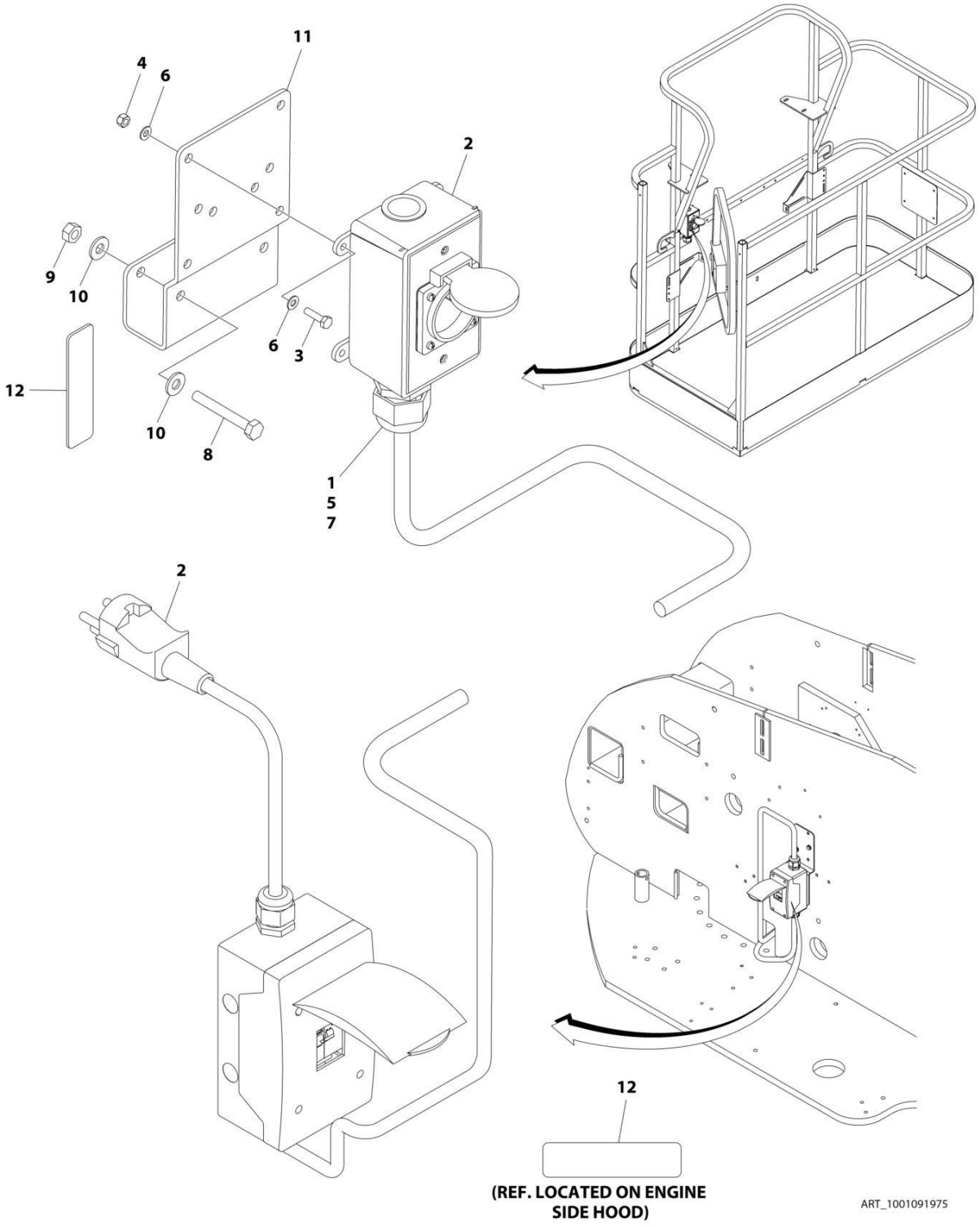

FIGURE 8-16. AC BOX AT PLATFORM INSTALLATION - 220V AFSINT 107 KEYED GROUND (2X4 BOX) WITHOUT 2500W GENERATOR (CE & UK CA SPECS)

ITEM	PART NUMBER	QTY	DESCRIPTION	REV
	1001091975	Ref	AC BOX AT PLATFORM INSTALLATION - 220V AFSINT 107 2X4 BOX KEYED GROUND	F
1	0100020	AR	Sealant, Pipe	
2	0275454	1	Receptacle Box Kit (See Separate Breakdown in this Section)	
3	0700408	4	Bolt M4 x 16	
4	3290405	4	Nut M4	
5	1001101197	1	Adapter	
6	4811400	8	Washer M4	
7	1001101191	1	Connector, Strain Relief	
8	0641416	2	Bolt 1/4 x 2	
9	3311405	2	Nut 1/4	
10	4711400	4	Washer 1/4	
11	1001193018	1	Bracket	
12	3251242	2	Decal - 240V/50Hz	
13	1001205958	3	Terminal (Not Shown)	

FIGURE 8-17. AC BOX AT PLATFORM INSTALLATION - 220V AFSINT 107 KEYED GROUND (2X4 BOX) WITH 2500W GENERATOR (CE & UK CA SPECS)

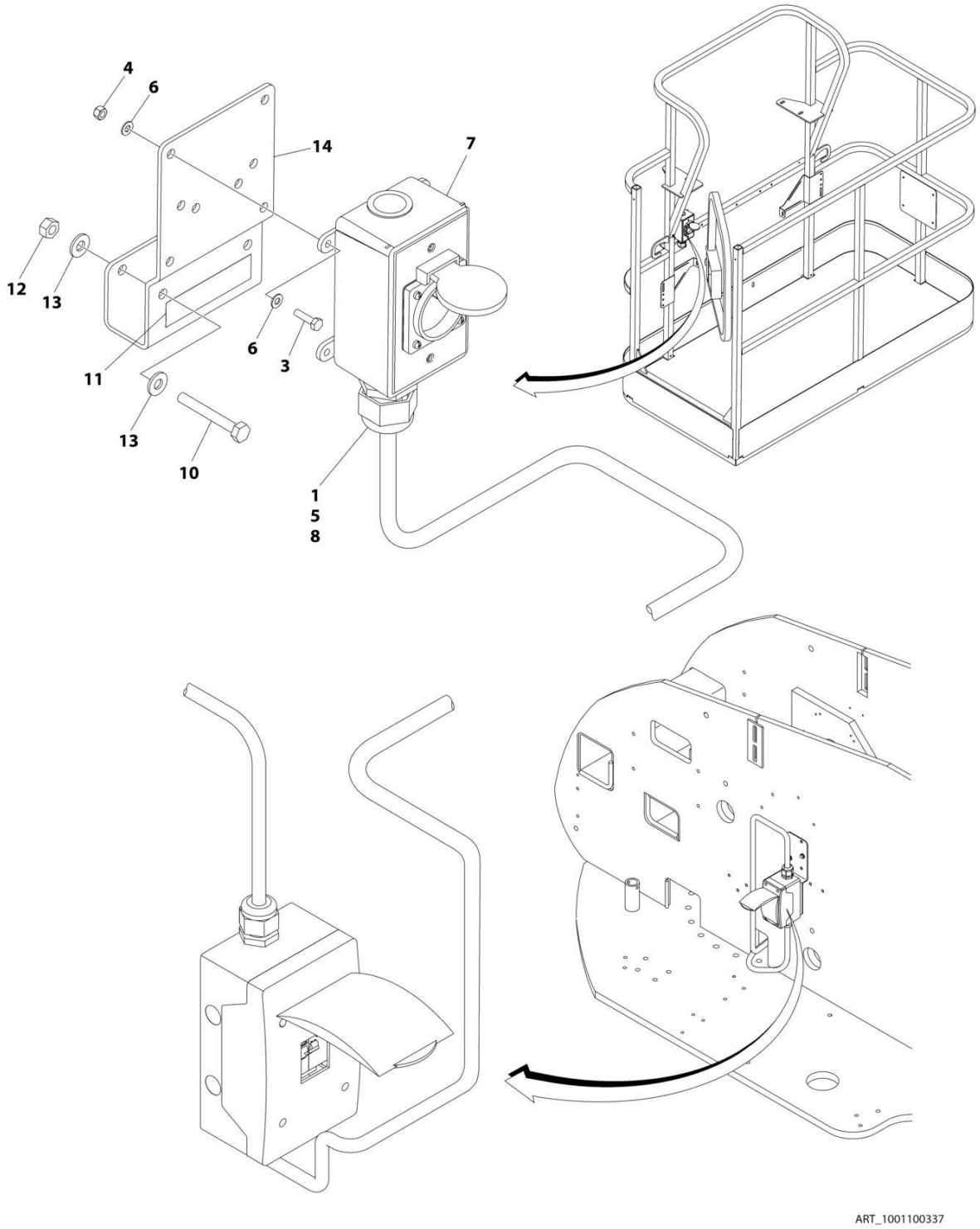

FIGURE 8-17. AC BOX AT PLATFORM INSTALLATION - 220V AFSINT 107 KEYED GROUND (2X4 BOX) WITH 2500W GENERATOR (CE & UK CA SPECS)

ITEM	PART NUMBER	QTY	DESCRIPTION	REV
	1001100337	Ref	AC BOX AT PLATFORM INSTALLATION - 220V AFSINT 107 2X4 BOX KEYED GROUND (2X4 BOX)	E
1	0100020	AR	Sealant, Pipe	
3	0700408	4	Bolt M4 x 16	
4	3290405	4	Nut M4	
5	1001101197	1	Adapter	
6	4811400	8	Washer M4	
7	1001100346	1	Receptacle Box Kit (See Separate Breakdown in this Section)	
8	1001101191	1	Connector, Strain Relief	
9	1060908	10 ft /3.05m	Cable, Electrical 12/3 (Not Shown)	
10	0641416	2	Bolt 1/4 x 2	
11	3252507	1	Decal - 220V	
12	3311405	2	Nut 1/4	
13	4711400	4	Washer 1/4	
14	1001193018	1	Bracket	
15	1001205958	3	Terminal (Not Shown)	

FIGURE 8-18. AC BOX AT PLATFORM INSTALLATION - 220V AFSINT 107 KEYED GROUND (2X4 BOX) WITH 4000W GENERATOR (CE & UK CA SPECS)

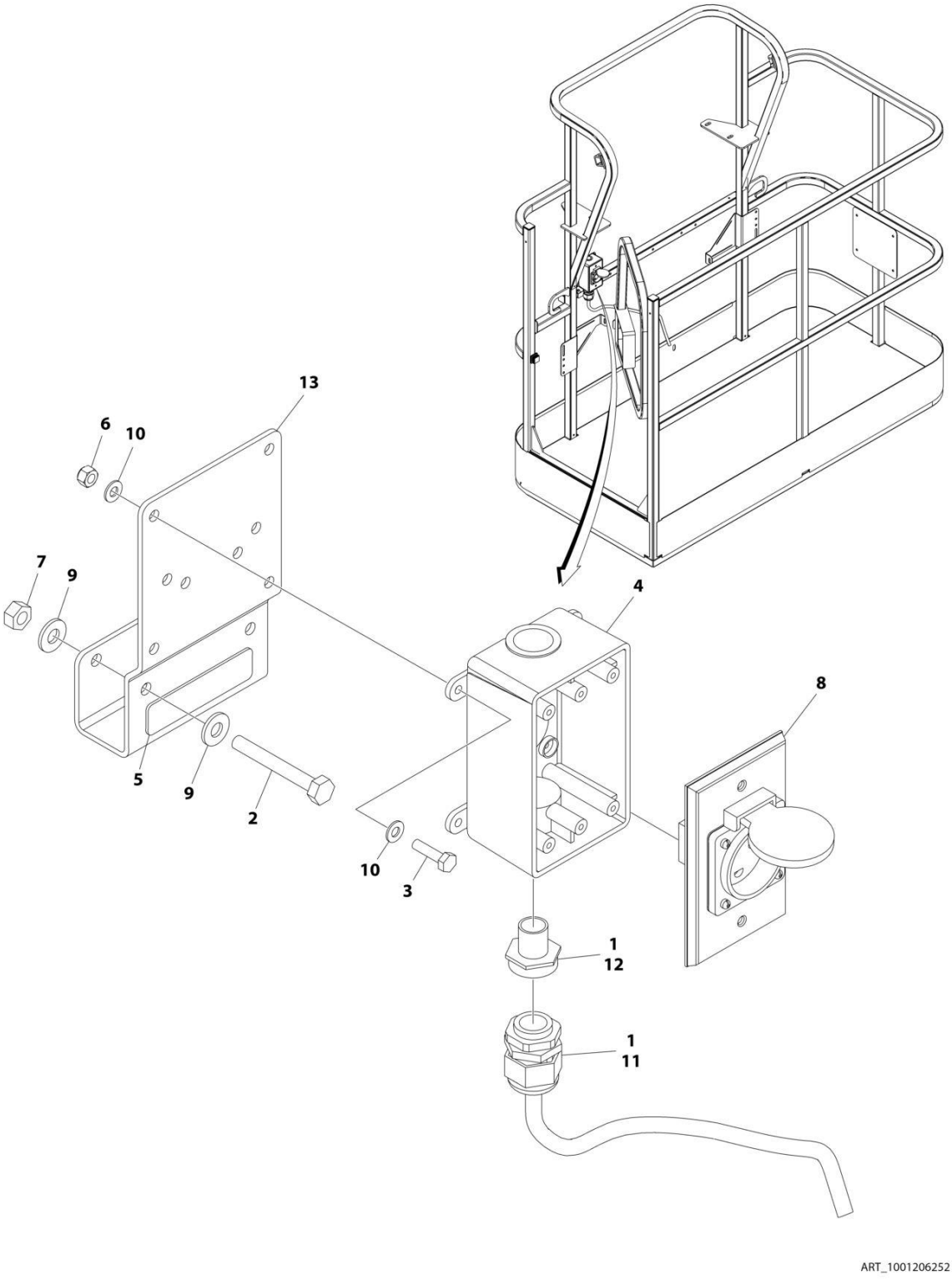

FIGURE 8-18. AC BOX AT PLATFORM INSTALLATION - 220V AFSINT 107 KEYED GROUND (2X4 BOX) WITH 4000W GENERATOR (CE & UK CA SPECS)

ITEM	PART NUMBER	QTY	DESCRIPTION	REV
	1001206252	Ref	AC BOX AT PLATFORM INSTALLATION - 220V AFSINT 107 2x4 BOX KEYED GROUND	A
1	0100020	AR	Sealant, Pipe	
2	0641416	2	Bolt 1/4 x 2	
3	0700408	4	Bolt M4 x 16	
4	0861731	1	Box, Switch	
5	3251242	1	Decal - 240V/50Hz	
6	3290405	4	Nut M4	
7	3311405	2	Nut 1/4	
8	4461246	1	Receptacle	
9	4711400	4	Washer 1/4	
10	4811400	8	Washer M4	
11	1001101191	1	Connector, Strain Relief	
12	1001101197	1	Adapter	
13	1001193018	1	Bracket, AC Receptacle	
14	1001205958	3	Terminal (Not Shown)	

FIGURE 8-19. AC BOX AT PLATFORM INSTALLATION - 240V (WITH 4000W GENERATOR) (ALL SPECS EXCEPT AUSTRALIAN & CE & UK CA SPECS)

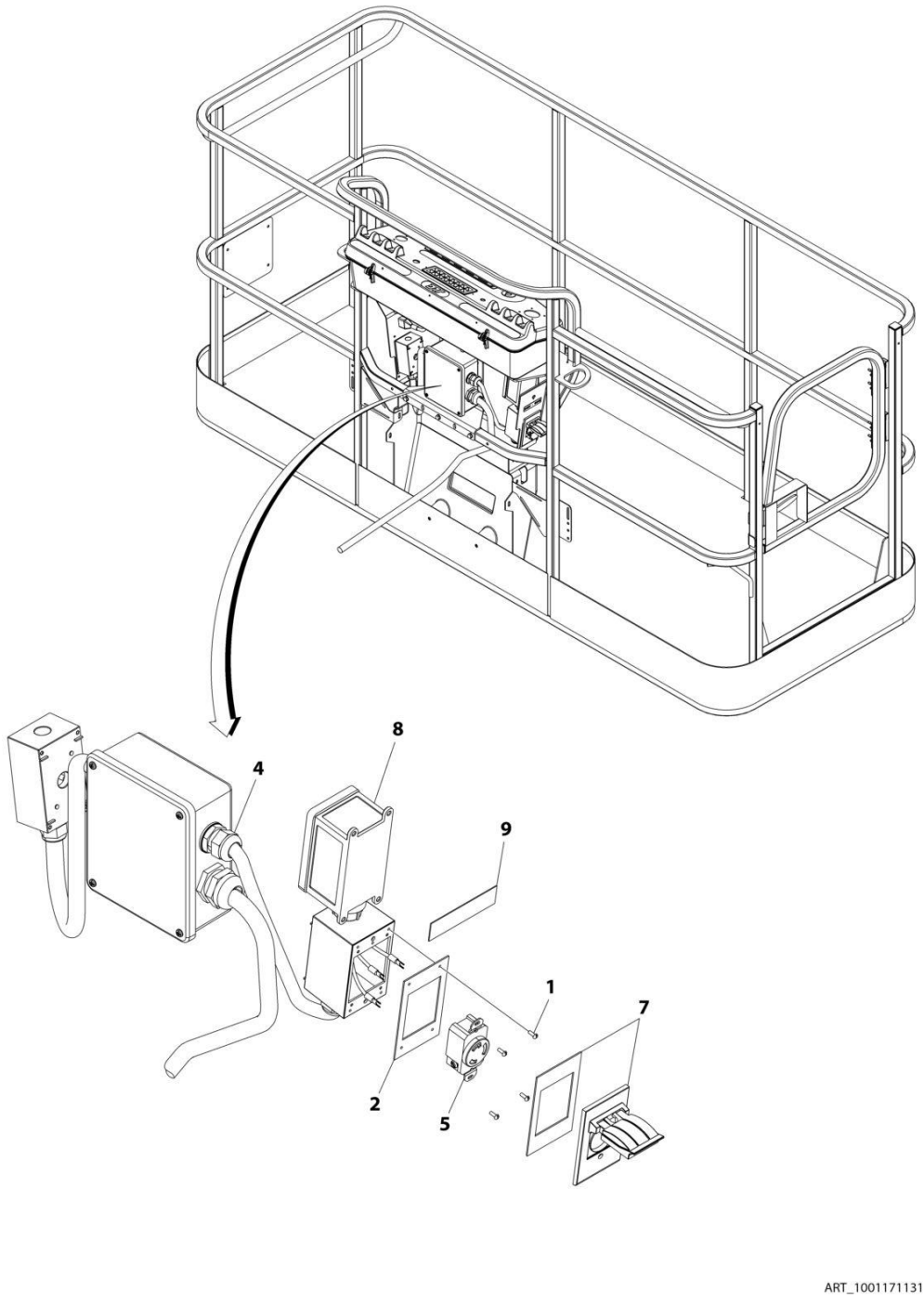

FIGURE 8-19. AC BOX AT PLATFORM INSTALLATION - 240V (WITH 4000W GENERATOR) (ALL SPECS EXCEPT AUSTRALIAN & CE & UK CA SPECS)

ITEM	PART NUMBER	QTY	DESCRIPTION	REV
	1001171131	Ref	AC BOX AT PLATFORM INSTALLATION - 240V RECEPTACLE	B
1	3910606	4	Screw 6 x 3/8	
2	3960422	1	Gasket	
3	4240018	AR	Tie-Strap (Not Shown)	
4	4460425	1	Connector, Strain Relief	
5	1001176862	1	Receptacle	
7	1001110872	1	Cover, Receptacle	
8	1001159120	1	Receptacle/Breaker Box Assembly	
8	1001148675	1	Box, Receptacle	
8	1001159118	1	Breaker GFCI 30Amp 240VAC	
8	4460612	1	Connector, Strain Relief	
8	1001159119	1	Connector (Between Boxes)	
9	1705374	1	Decal - 240V/60Hz	

FIGURE 8-20. AC BOX AT PLATFORM INSTALLATION - 240V (WITH 7500W SKYPOWER GENERATOR) (ALL SPECS EXCEPT AUSTRALIAN, CE & UK CA SPECS)

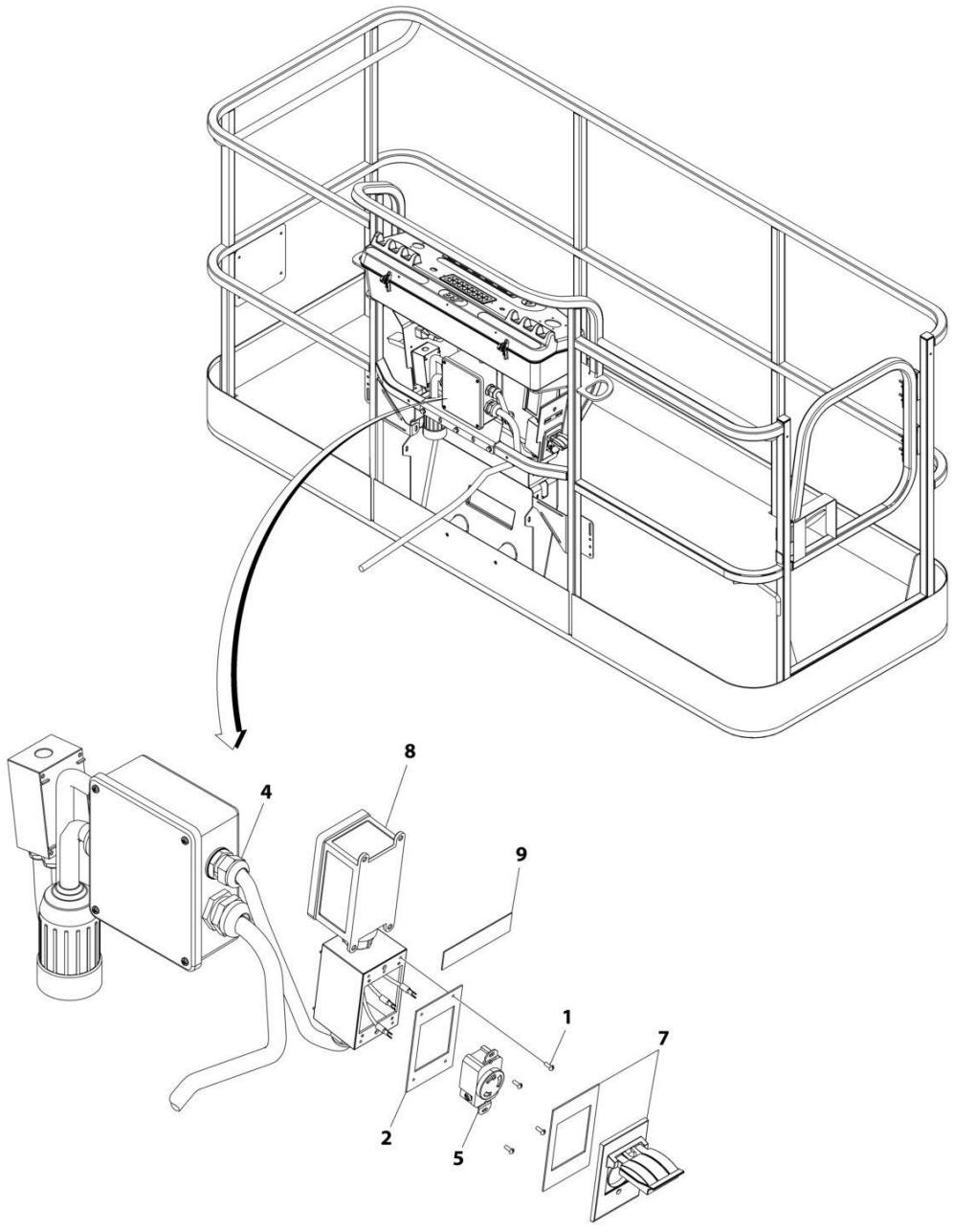

FIGURE 8-20. AC BOX AT PLATFORM INSTALLATION - 240V (WITH 7500W SKYPOWER GENERATOR) (ALL SPECS EXCEPT AUSTRALIAN, CE & UK CA SPECS)

ITEM	PART NUMBER	QTY	DESCRIPTION	REV
	1001159121	Ref	AC BOX AT PLATFORM INSTALLATION - 240V RECEPTACLE	B
1	3910606	4	Screw 6 x 3/8	
2	3960422	1	Gasket	
3	4240018	AR	Tie-Strap (Not Shown)	
4	4460425	1	Connector, Strain Relief	
5	4460958	1	Receptacle	
7	1001110872	1	Cover, Receptacle	
8	1001159120	1	Receptacle/Breaker Box Assembly	
8	1001148675	1	Box, Receptacle	
8	1001159118	1	Breaker Box Assembly	
8	4460612	1	Connector, Strain Relief	
8	1001159119	1	Connector (Between Boxes)	
9	1705374	1	Decal - 240V/60Hz	

FIGURE 8-21. AC LEAD INSTALLATION (ANSI EXPORT, AUSTRALIAN, CE & UK CA SPECS)

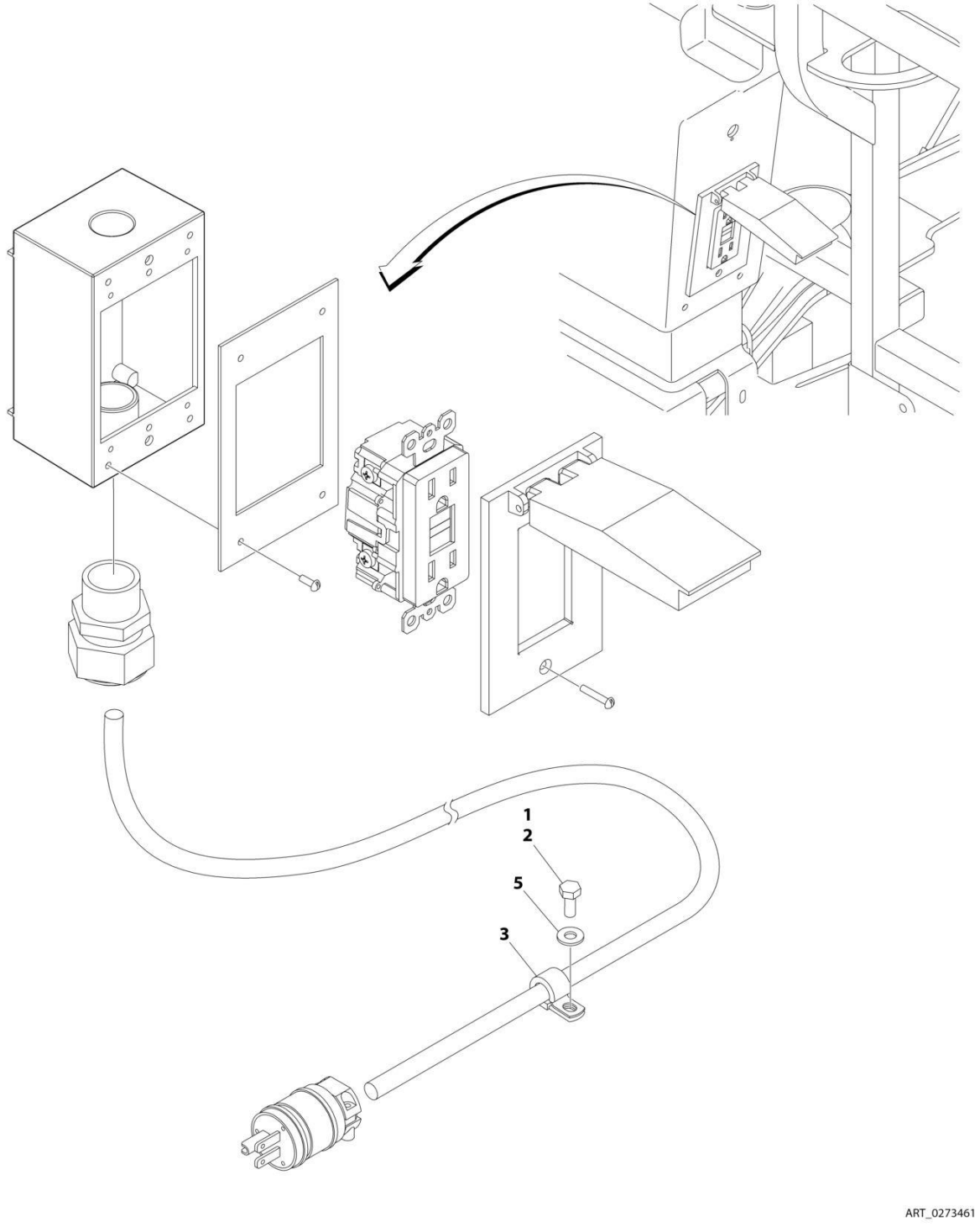

FIGURE 8-21. AC LEAD INSTALLATION (ANSI EXPORT, AUSTRALIAN, CE & UK CA SPECS)

ITEM	PART NUMBER	QTY	DESCRIPTION	REV
	0273461	Ref	AC LEAD INSTALLATION (CE & UK CA SPECS)	B
1	0100011	AR	Compound, Locking	
2	0641405	1	Bolt 1/4 x 5/8	
3	1320041	1	Clamp	
5	4711400	1	Washer 1/4	

FIGURE 8-22. AC 10 AMP BREAKER BOX INSTALLATION (CE & UK CA SPECS)

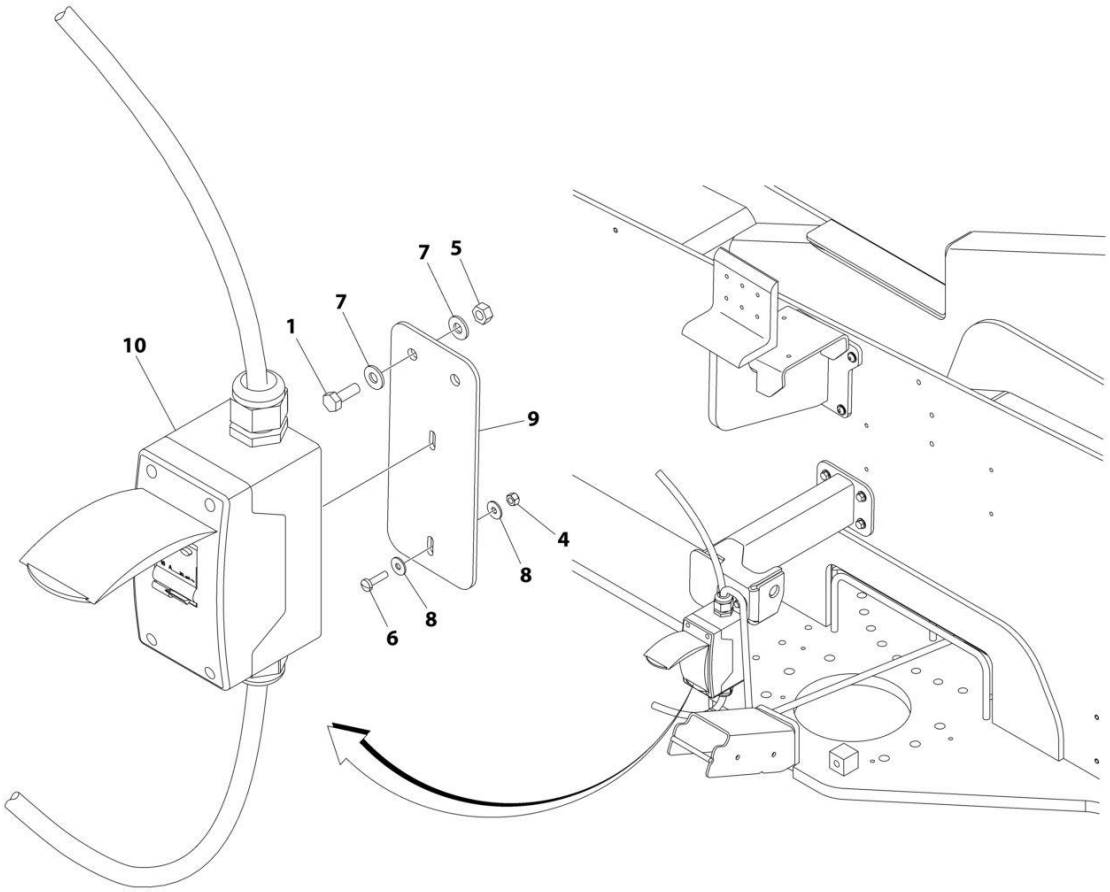

FIGURE 8-22. AC 10 AMP BREAKER BOX INSTALLATION (CE & UK CA SPECS)

ITEM	PART NUMBER	QTY	DESCRIPTION	REV
	1001109557	Ref	AC 10 AMP BREAKER BOX INSTALLATION	B
1	0641406	2	Bolt 1/4 x 3/4	
4	3290405	2	Nut M4	
5	0641405	2	Bolt 1/4 x 5/8	
6	4010408	2	Screw M4 x 16	
7	4711400	4	Washer 1/4	
8	1001091102	4	Washer M4	
9	1001096172	1	Bracket	
10	1001109648	1	Breaker Box Kit - 10 Amp (See Separate Breakdown in this Section)	

FIGURE 8-23. AC 16 AMP BREAKER BOX INSTALLATION (CE & UK CA SPECS)

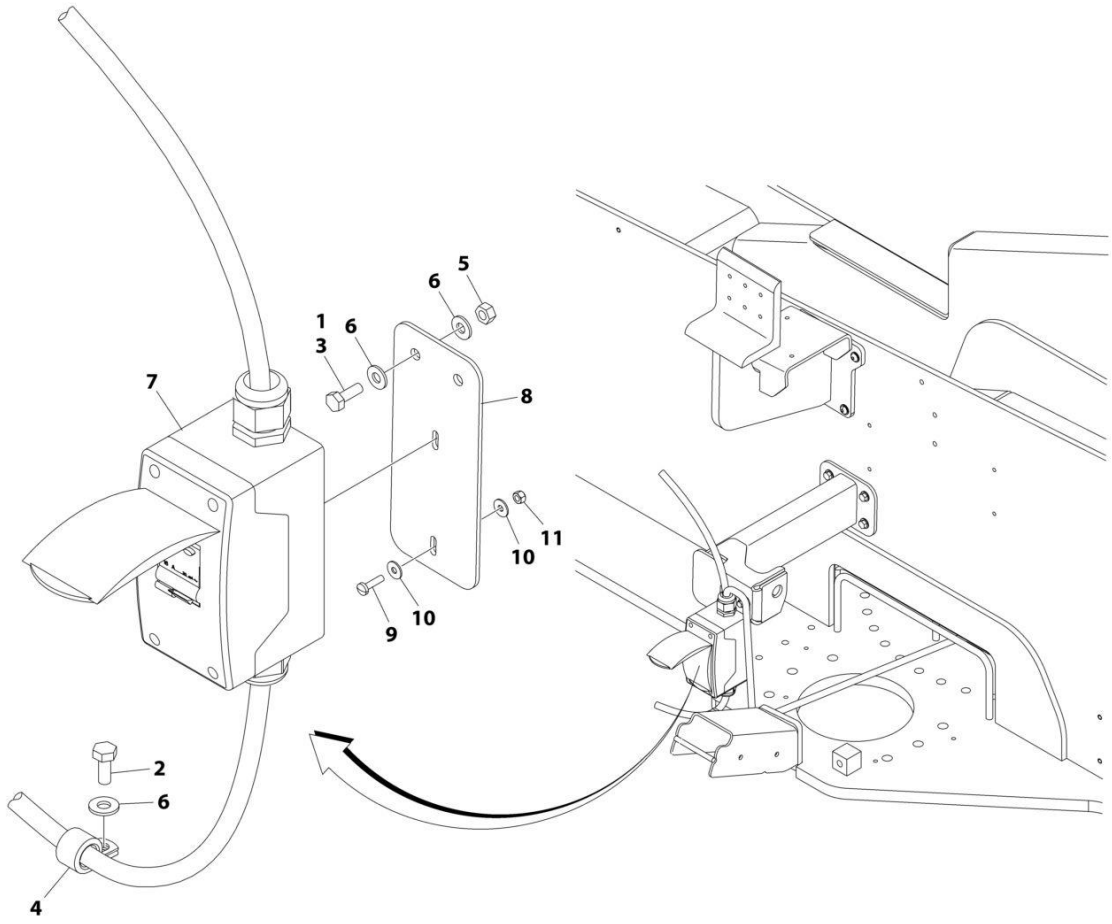

FIGURE 8-23. AC 16 AMP BREAKER BOX INSTALLATION (CE & UK CA SPECS)

ITEM	PART NUMBER	QTY	DESCRIPTION	REV
	1001096163	Ref	AC 16 AMP BREAKER BOX INSTALLATION (CE & UK CA SPECS)	E
1	0100011	AR	Compound, Locking	
2	0641405	1	Bolt 1/4 x 5/8	
3	0641406	2	Bolt 1/4 x 3/4	
4	1320041	1	Clamp	
5	3311405	2	Nut 1/4	
6	4711400	5	Washer 1/4	
7	1001109654	1	Breaker Box Kit - 16 Amp (See Separate Breakdown in this Section)	
8	1001096172	1	Bracket	
9	4010408	2	Screw M4 x 16	
10	1001091102	4	Washer M4	
11	3290405	2	Nut M4	

FIGURE 8-24. ANALYZER CALBE HARNESS

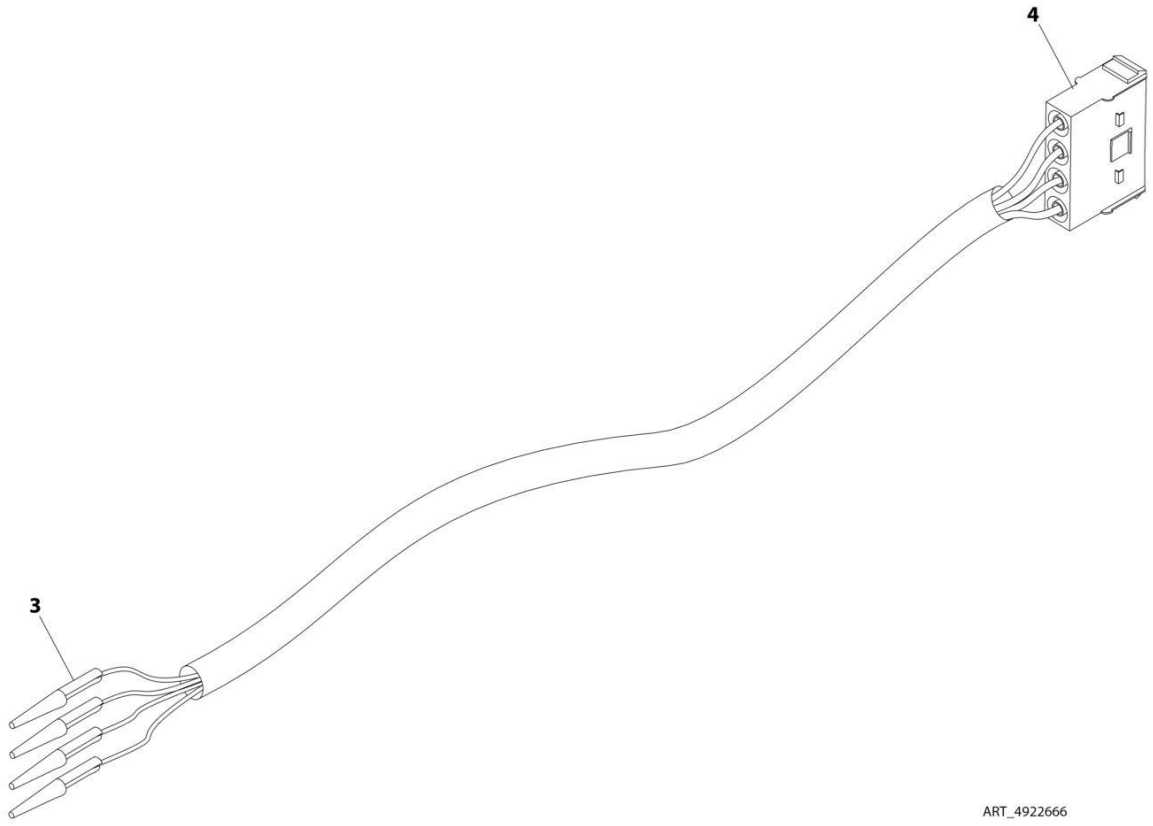

FIGURE 8-24. ANALYZER CALBE HARNESS

ITEM	PART NUMBER	QTY	DESCRIPTION	REV
	4922666	Ref	ANALYZER CABLE HARNESS	C
3	4460226	4	Socket, Female	
4	4460761	1	Connector - 4 Position	
4	4460227	4	Pin, Male	

FIGURE 8-25. AXLE POWER TRACK HARNESS ASSEMBLY

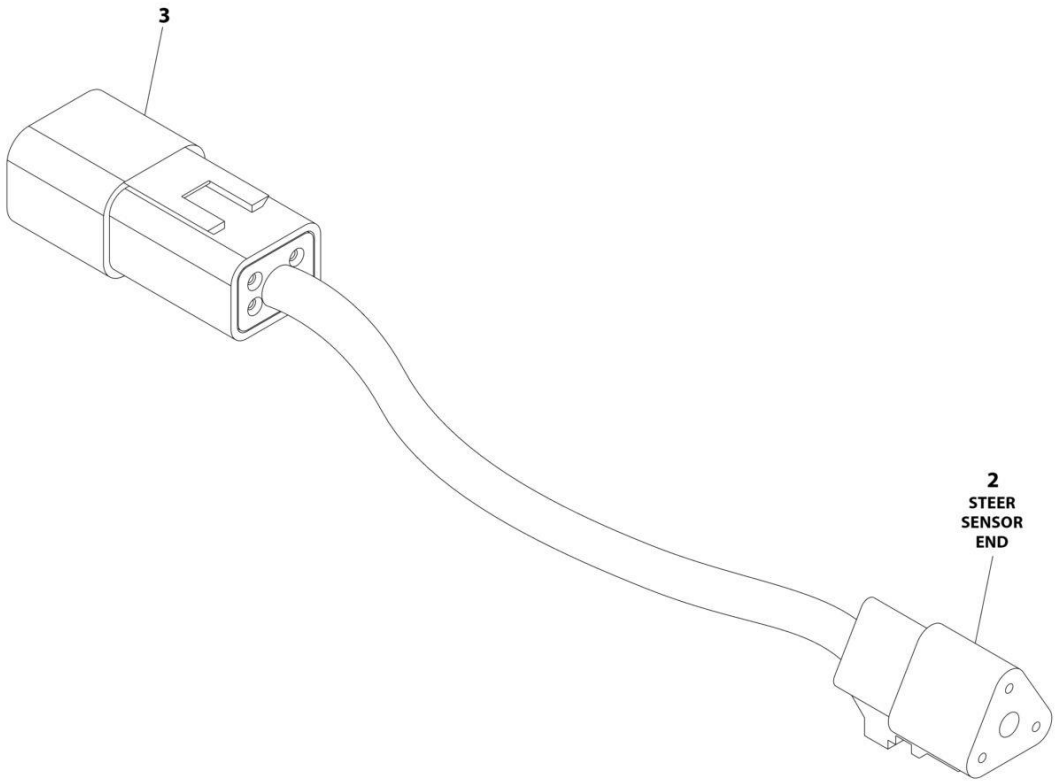

FIGURE 8-25. AXLE POWER TRACK HARNESS ASSEMBLY

ITEM	PART NUMBER	QTY	DESCRIPTION	REV
	4922718	Ref	AXLE POWER TRACK HARNESS ASSEMBLY	E
2	4460539	1	Connector - 3 Position	
2	4460944	3	Socket, Female	
3	4460932	1	Connector - 4 Position	
3	4460943	4	Pin, Male	

FIGURE 8-26. BATTERY DISCONNECT INSTALLATION

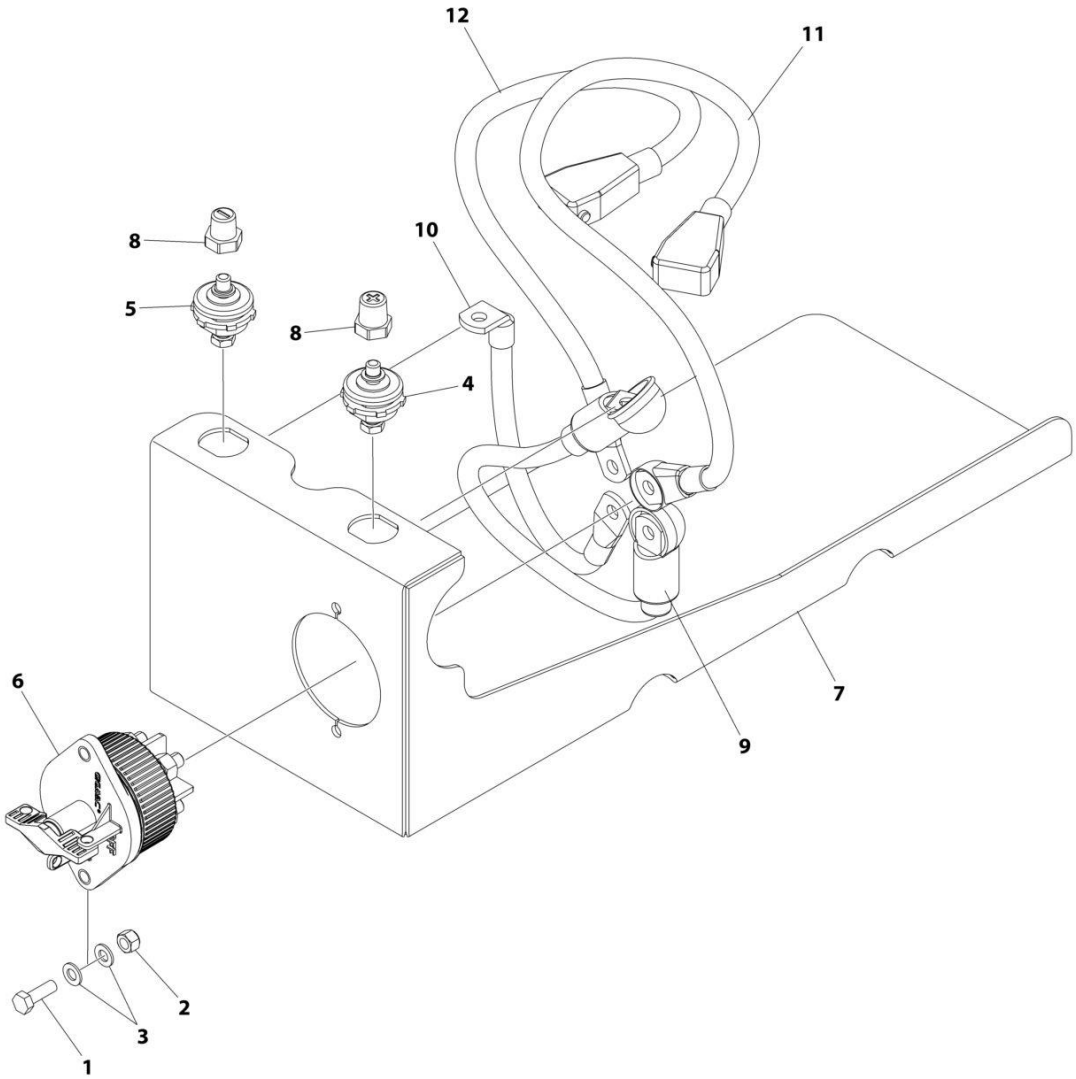

FIGURE 8-26. BATTERY DISCONNECT INSTALLATION

ITEM	PART NUMBER	QTY	DESCRIPTION	REV
	1001242825	Ref	BATTERY DISCONNECT INSTALLATION	B
1	0760812	2	Bolt M8 x 25	
2	3290805	2	Nut M8	
3	4811900	4	Washer M8	
4	1001214570	1	Connector (Red)	
5	1001214571	1	Connector (Black)	
6	1001225346	1	Switch, Disconnect	
7	1001242824	1	Mount	
8	1001206476	1	Connector	
9	1001236375	1	Cable (Positive)	
10	1001236376	1	Cable (Negative)	
11	1001236377	1	Cable (Positive)	
12	1001236378	1	Cable (Negative)	

FIGURE 8-27. BEACON LIGHT HARNESS

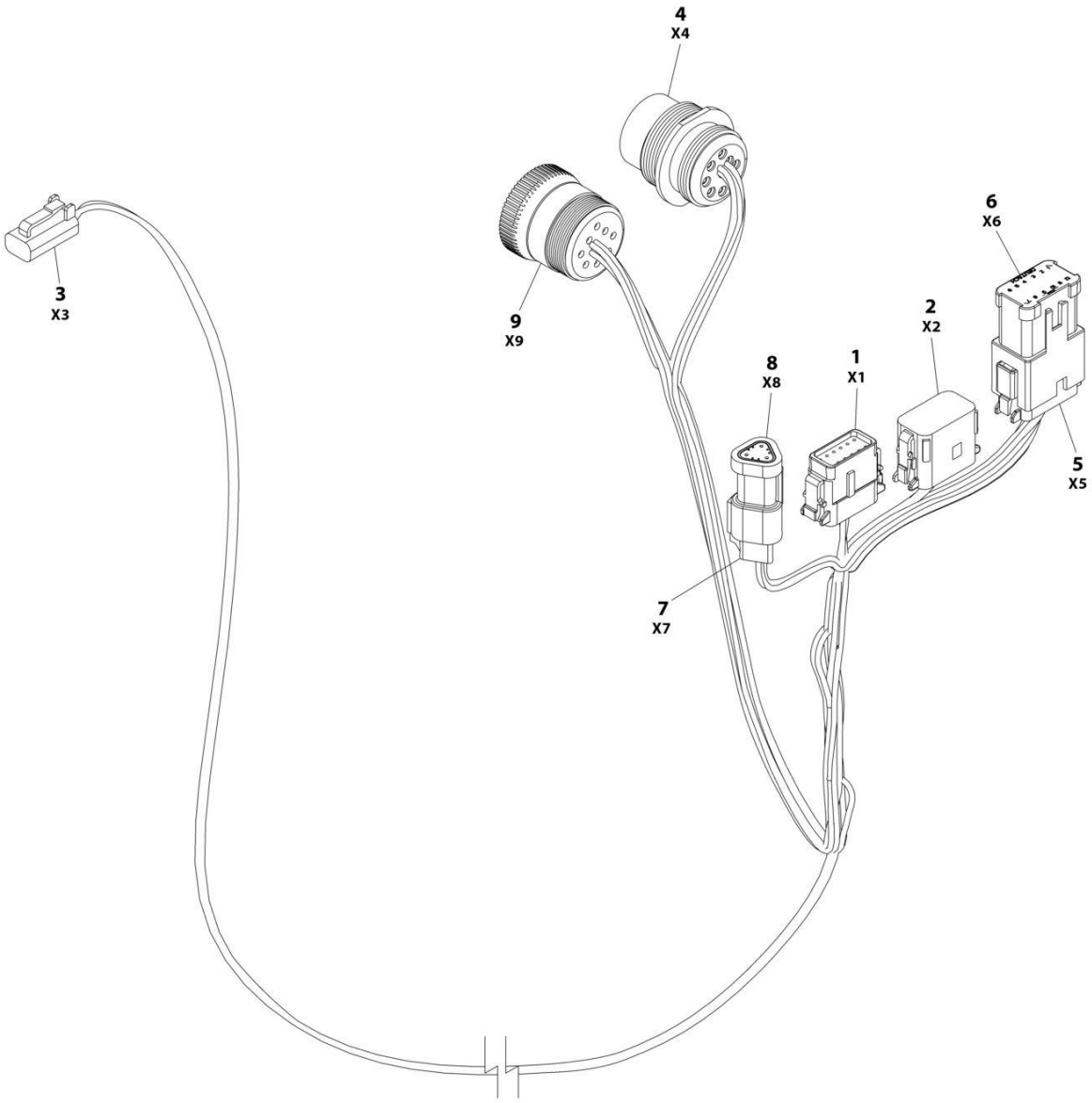

FIGURE 8-27. BEACON LIGHT HARNESS

ITEM	PART NUMBER	QTY	DESCRIPTION	REV
	1001142736	Ref	STROBE LIGHT HARNESS	F
1	1001116808	1	Plug, Male - 12 Position	
1	4460928	3	Socket, Female	
1	4460518	9	Plug, Terminal	
2	1001116774	1	Plug, Male - 12 Position	
2	4460928	3	Socket, Female	
2	4460518	9	Plug, Terminal	
3	4460891	1	Plug, Male - 2 Position	
3	4460465	2	Socket, Female	
4	1001112612	1	Connector - 9 Position	
4	4460464	6	Pin, Male	
4	4460466	3	Plug, Terminal	
5	4460933	1	Plug, Male - 12 Position	
5	4460465	12	Socket, Female	
6	1001119020	1	Bussbar - 12 Position	
7	4461095	1	Plug, Male - 3 Position	
7	4460465	3	Socket, Female	
8	4461070	1	Bussbar - 3 Position	
9	1001112796	1	Connector - 9 Position	
9	4460465	6	Socket, Female	
9	4460466	3	Plug, Terminal	

FIGURE 8-28. B.L.A.M. HARNESS

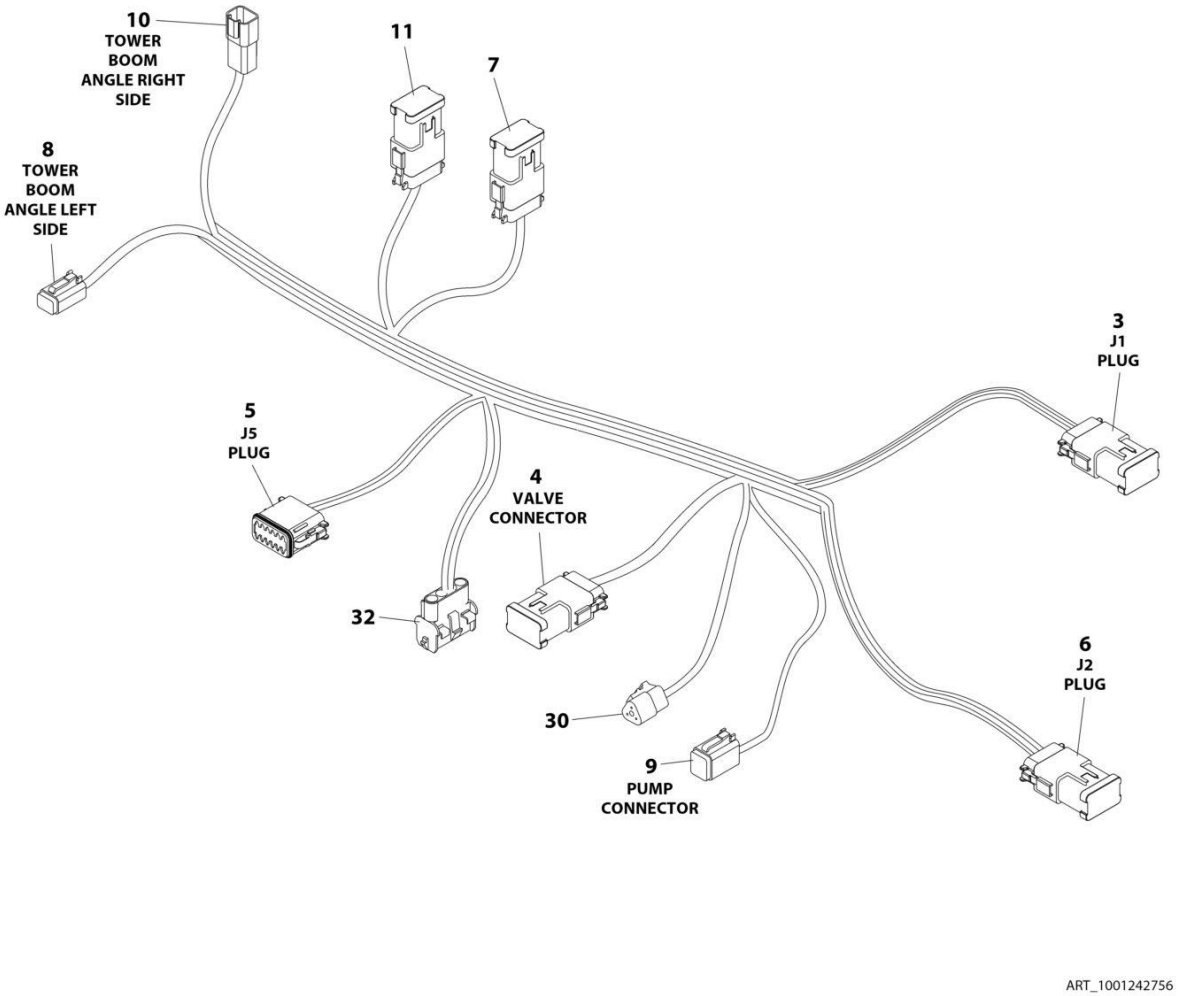

FIGURE 8-28. B.L.A.M. HARNESS

ITEM	PART NUMBER	QTY	DESCRIPTION	REV
	1001242756	Ref	B.L.A.M. HARNESS	D
3	1001270339	1	Connector - 12 Position (Gray)	
3	4460466	7	Plug, Seal	
3	4460944	3	Socket, Female	
3	4460942	1	Socket, Female	
4	4460970	1	Connector - 12 Position	
4	4460943	3	Pin, Male (Gold)	
4	4460464	6	Pin, Male	
4	4460941	3	Pin, Male	
5	1001239345	1	Connector - 12 Position (Brown)	
5	4460466	5	Plug, Seal	
5	4460465	2	Socket, Female	
5	4460944	4	Socket, Female	
6	1001270340	1	Connector - 12 Position (Black)	
6	4460466	8	Plug, Seal	
6	4460944	2	Socket, Female	
6	4460465	2	Socket, Female	
7	4460836	1	Connector - 12 Position (Black)	
7	4460466	8	Plug, Seal	
7	4460465	4	Socket, Female	
7	4460942	2	Socket, Female	
7	1001249244	1	Connector - 12 Position Buss Bar	
8	4460884	1	Connector - 4 Position (Gray)	
8	4460944	4	Socket, Female	
9	4460894	1	Connector - 6 Position (Gray)	
9	4460465	5	Socket, Female	
9	4460466	2	Plug, Seal	
10	4460932	1	Connector - 4 Position (Gray)	
10	4460943	4	Pin, Male	
11	4460836	1	Plug, Male - 12 Position (Black)	
11	4460466	6	Plug, Seal	
11	4460465	5	Socket, Female	
11	1001249244	1	Connector - 12 Position Buss Bar	
18	4240033	7	Tie-Strap (Not Shown)	
30	4460539	1	Connector - 3 Position	
30	4460944	3	Socket, Female	
30	4460121	1	Wire Cap	
32	4460761	1	Connector - 4 Position	
32	4460227	4	Pin, Male	

FIGURE 8-29. BOOM CABLE INSTALLATION (ANSI, ANSI EXPORT AND JAPANESE SPECS)

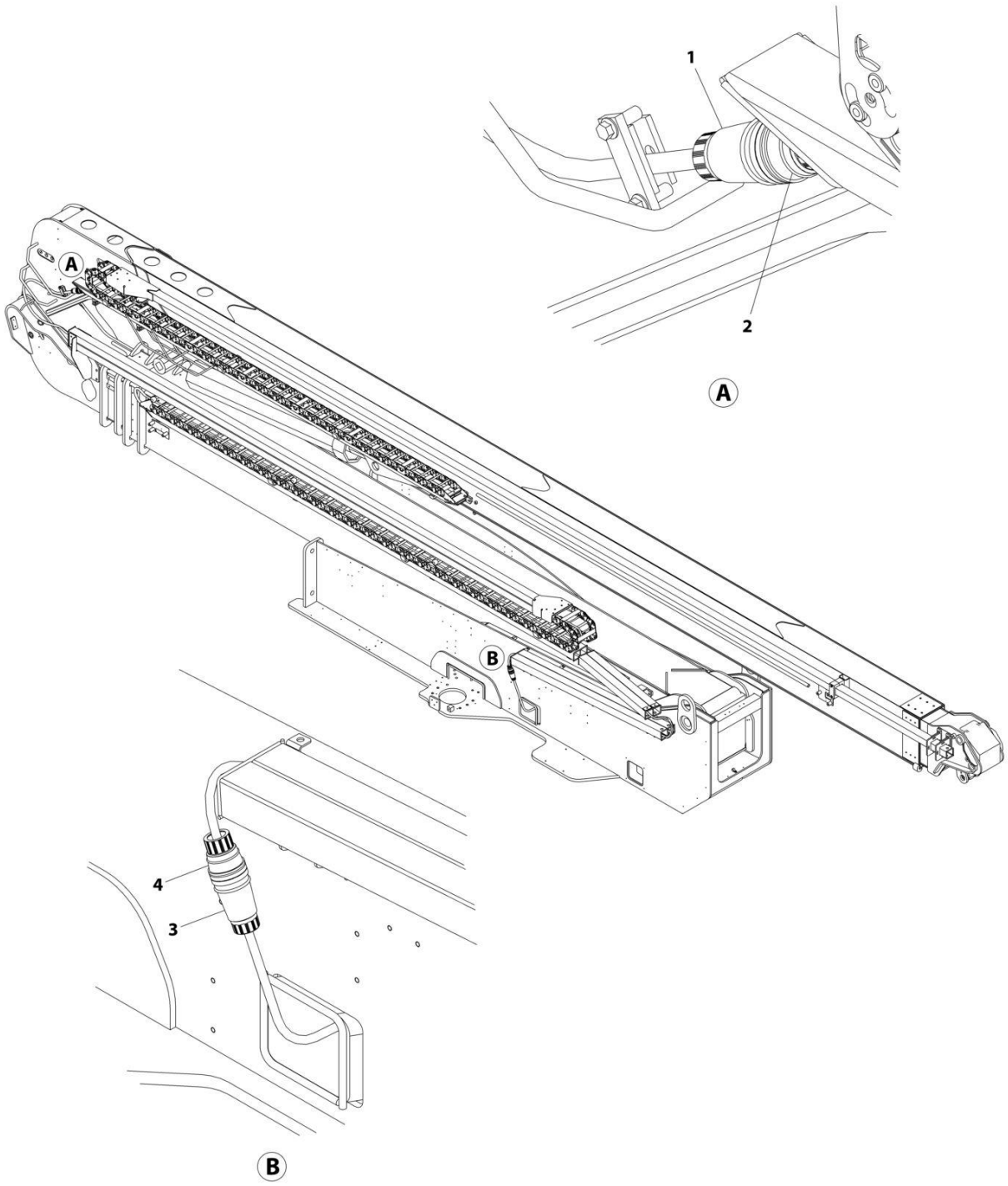

FIGURE 8-29. BOOM CABLE INSTALLATION (ANSI, ANSI EXPORT AND JAPANESE SPECS)

ITEM	PART NUMBER	QTY	DESCRIPTION	REV
	0273474	Ref	BOOM CABLE INSTALLATION	C
1	1001227932	1	Tower Boom AC Cable Harness	
1	1001213585	1	Receptacle, Female	
2	1001227933	1	Main Boom AC Cable Harness	
2	1001213584	1	Plug, Male	
3	1001227934	1	Turntable AC Cable Harness	
3	1001213585	1	Receptacle, Female	
4	1001213584	1	Plug, Male	

FIGURE 8-30. BOOM CABLE INSTALLATION (AUSTRALIAN, CE & UK CA SPECS)

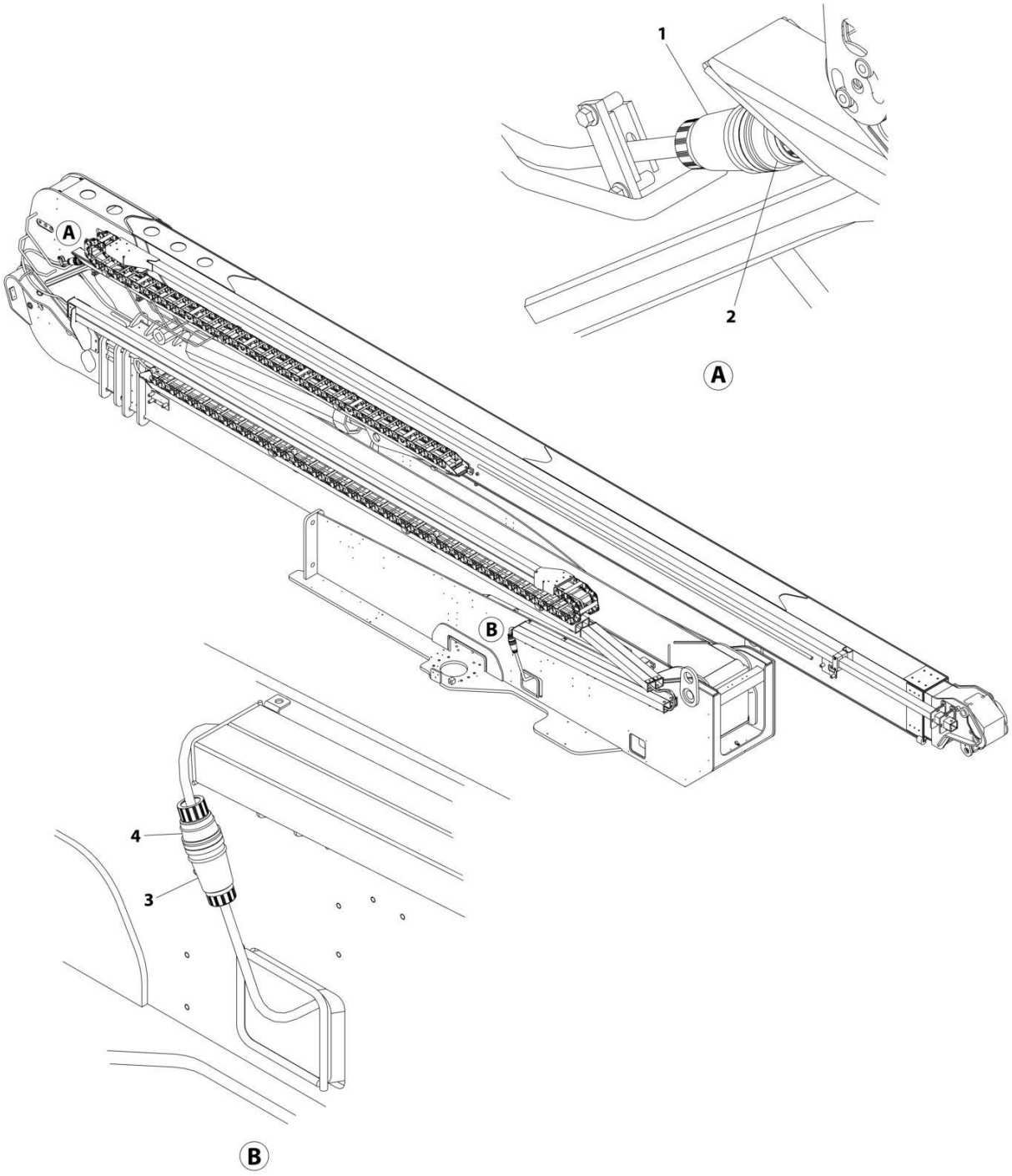

FIGURE 8-30. BOOM CABLE INSTALLATION (AUSTRALIAN, CE & UK CA SPECS)

ITEM	PART NUMBER	QTY	DESCRIPTION	REV
	0273475	Ref	BOOM CABLE INSTALLATION	E
1	1001227935	1	Tower Boom AC Cable Harness	
1	1001213585	1	Receptacle, Female	
2	1001227936	1	Main Boom AC Cable Harness	
2	1001213584	1	Plug, Male	
3	1001227937	1	Turntable AC Cable Harness	
3	1001213585	1	Receptacle, Female	
4	1001213584	1	Plug, Male	

FIGURE 8-31. BOOM CABLE INSTALLATION - 4000W 60HZ GENERATOR

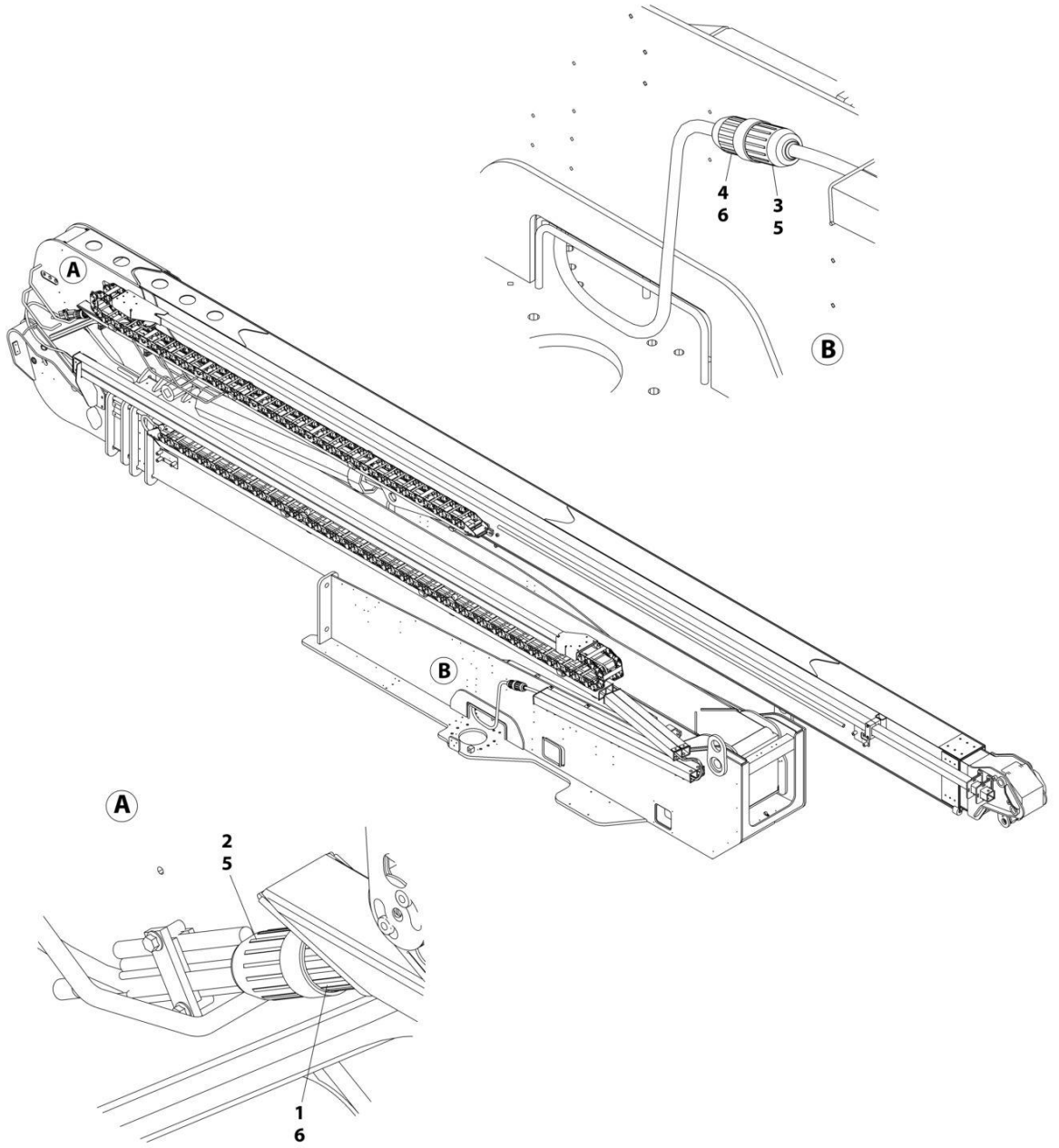

FIGURE 8-31. BOOM CABLE INSTALLATION - 4000W 60HZ GENERATOR

ITEM	PART NUMBER	QTY	DESCRIPTION	REV
	1001161049	Ref	BOOM CABLE INSTALLATION - 4000W 60HZ GENERATOR	A
1	1001161042	1	Main Boom 4000W Generator Cable Harness	
1	1001131969	85 ft /25.9m	Cable, Electrical 8/4	
1	4460962	1	Plug, Male	
2	1001161043	1	Tower Boom 4000W Generator Cable Harness	
2	1001131969	71 ft /21.6m	Cable, Electrical 8/4	
2	4460963	1	Plug, Female	
3	4460962	1	Plug, Male	
4	1001161045	1	Turntable 4000W Generator Cable Harness	
4	1001131969	14 ft /4.27m	Cable, Electrical 8/4	
4	4460963	1	Plug, Female	
5	1671092	1	Cover, Male Connector	
6	1671093	1	Cover, Female Connector	

FIGURE 8-32. BOOM CABLE INSTALLATION - 4000W 50HZ GENERATOR

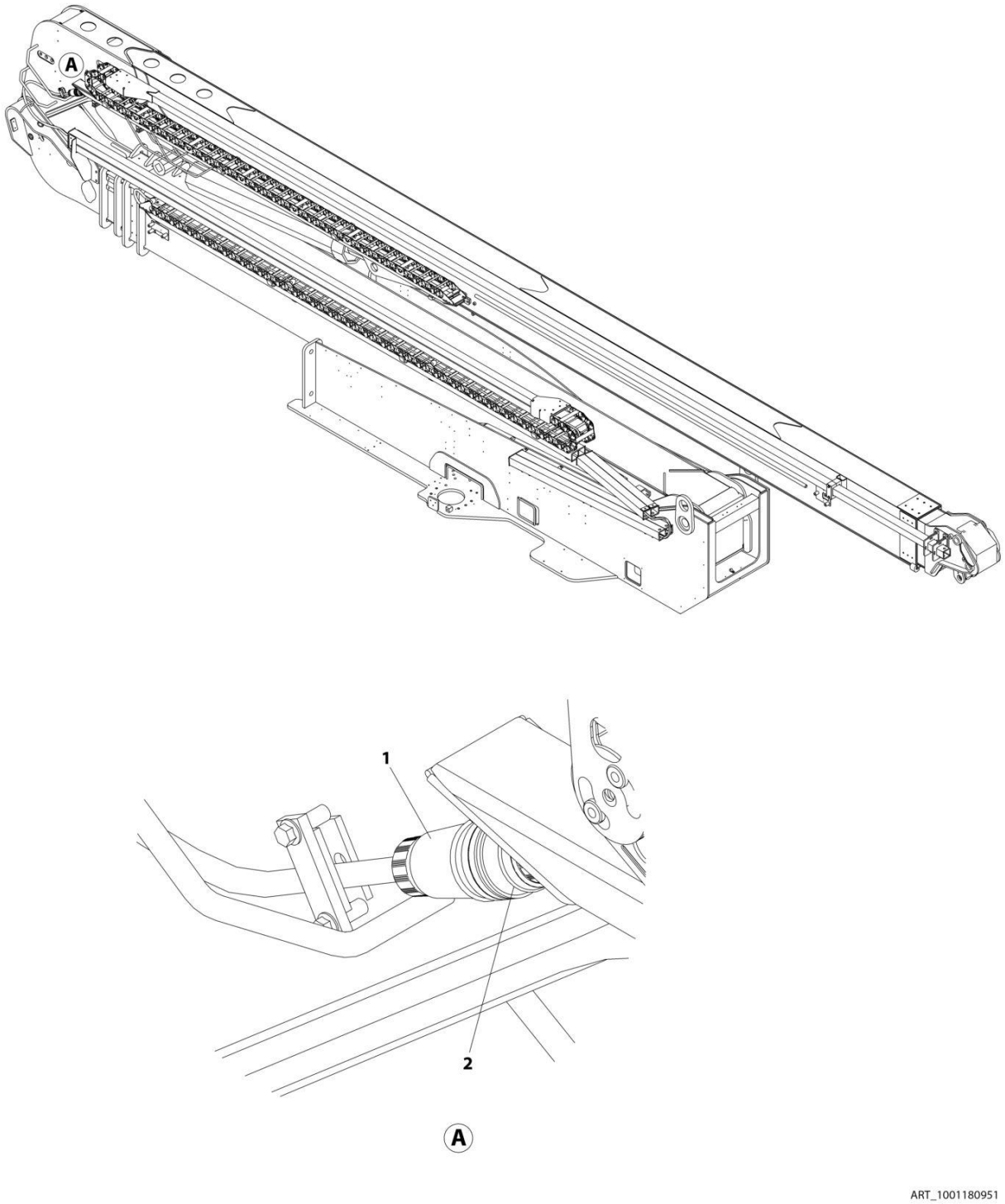

FIGURE 8-32. BOOM CABLE INSTALLATION - 4000W 50HZ GENERATOR

ITEM	PART NUMBER	QTY	DESCRIPTION	REV
	1001180951	Ref	BOOM CABLE INSTALLATION - 4000W 50HZ GENERATOR	B
1	1001227935	1	Tower Boom AC Cable Harness	
1	1001213585	1	Receptacle, Female	
2	1001227936	1	Main Boom AC Cable Harness	
2	1001213584	1	Plug, Male	

FIGURE 8-33. BOOM CABLE INSTALLATION - 7500W GENERATOR

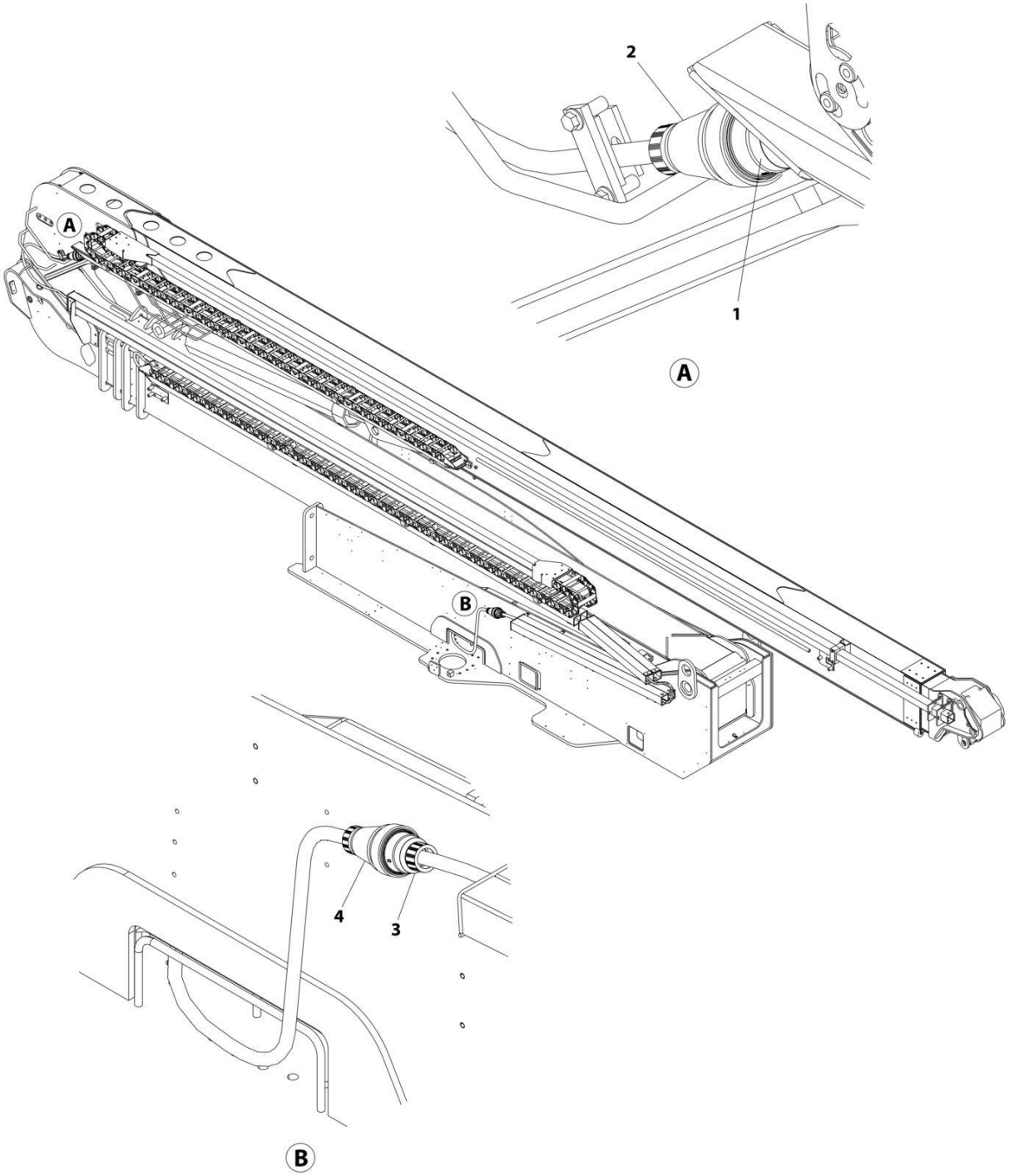

FIGURE 8-33. BOOM CABLE INSTALLATION - 7500W GENERATOR

ITEM	PART NUMBER	QTY	DESCRIPTION	REV
	0273476	Ref	BOOM CABLE INSTALLATION - 7500W GENERATOR	D
1	1001226294	1	Main Boom SkyPower Cable Harness	
1	1001218622	1	Plug, Male	
2	1001226293	1	Tower Boom SkyPower Cable Harness	
2	1001218623	1	Plug, Female	
3	1001218622	1	Plug, Male	
4	1001226306	1	Turntable SkyPower Cable Harness	
4	1001218623	1	Plug, Female	

FIGURE 8-34. BREAKER BOX KIT - 10 AMP (2500W GENERATOR)

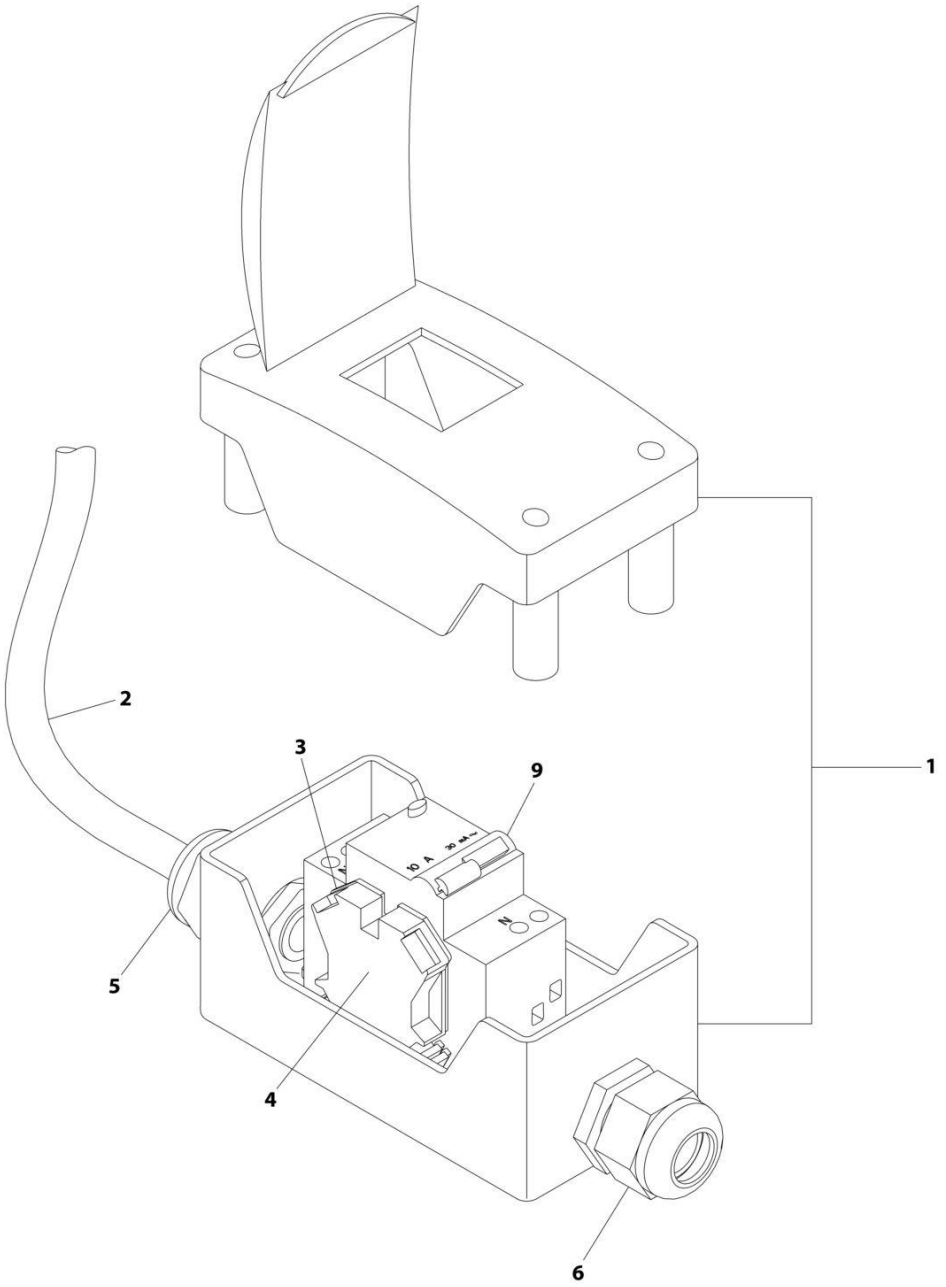

FIGURE 8-34. BREAKER BOX KIT - 10 AMP (2500W GENERATOR)

ITEM	PART NUMBER	QTY	DESCRIPTION	REV
	1001109648	Ref	BREAKER BOX KIT - 10 AMP (2500W GENERATOR)	B
1	0861880	1	Box, Breaker	
2	1060908	12 ft /3.6m	Cable, Electrical 12/3	
3	4460956	1	Barrier, Terminal Block End	
4	4460957	1	Block, Terminal	
5	1001097150	1	Connector, Strain Relief	
6	1001101191	1	Connector, Strain Relief	
9	1001181046	1	Breaker 30mA/16Amp	

FIGURE 8-35. BREAKER BOX KIT - 16 AMP (2500W GENERATOR)

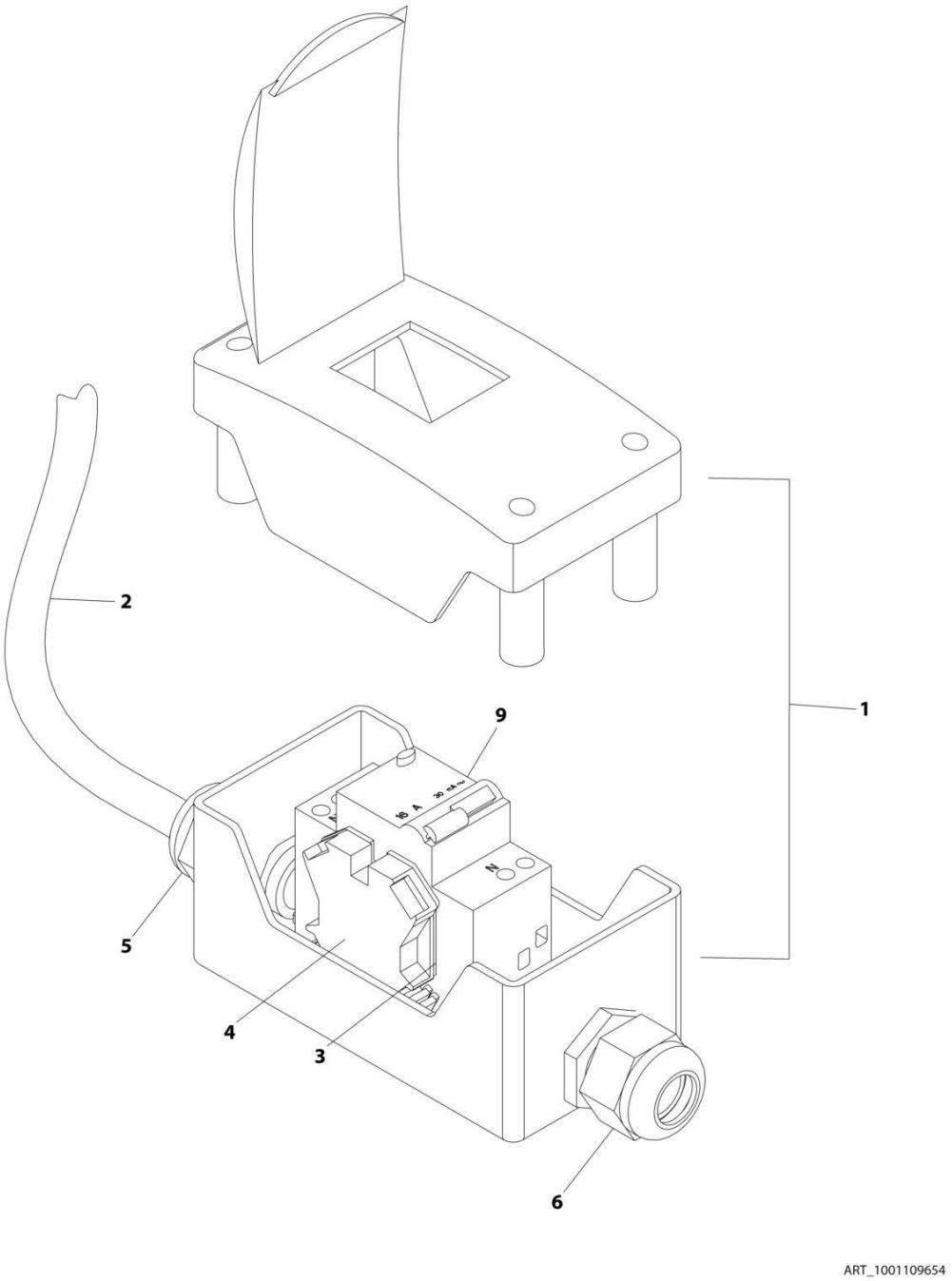

FIGURE 8-35. BREAKER BOX KIT - 16 AMP (2500W GENERATOR)

ITEM	PART NUMBER	QTY	DESCRIPTION	REV
	1001109654	Ref	BREAKER BOX KIT	C
1	0861880	1	Box, Breaker	
2	1060908	12 ft/ 3.6m	Cable 12/3	
3	4460956	1	Barrier, Terminal Block End	
4	4460957	1	Block, Terminal	
5	1001097150	1	Connector, Strain Relief	
6	1001101191	1	Connector, Strain Relief	
9	1001181045	1	Breaker - 30mA/16Amp	
10	1001100231	3	Terminal (Not Shown)	

FIGURE 8-36. BREAKER BOX KIT - 16 AMP (4000W GENERATOR)

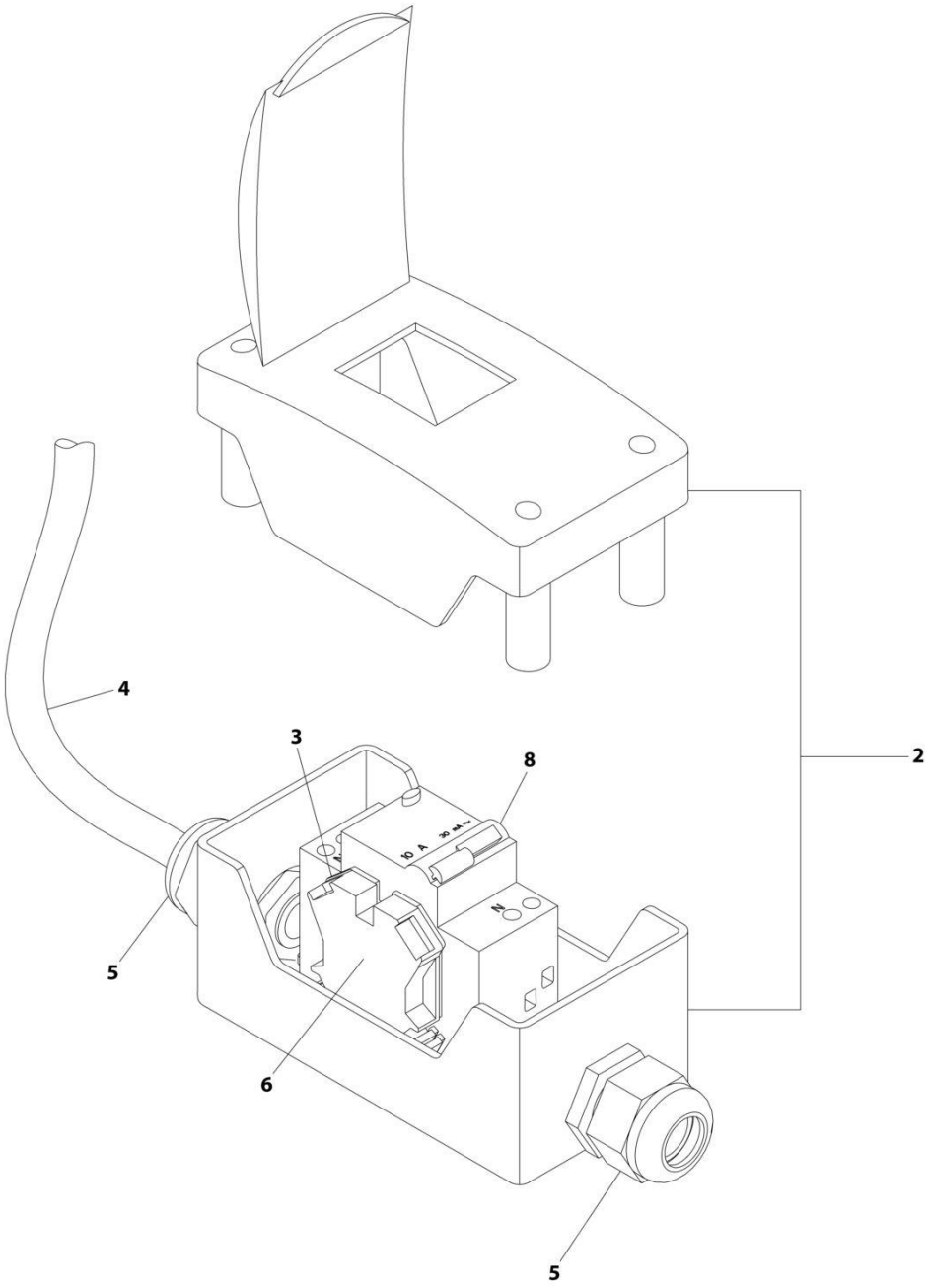

FIGURE 8-36. BREAKER BOX KIT - 16 AMP (4000W GENERATOR)

ITEM	PART NUMBER	QTY	DESCRIPTION	REV
	1001165368	Ref	BREAKER BOX KIT	B
2	0861880	1	Box, Circuit Breaker	
3	4460956	1	Barrier, Terminal Block End	
4	1060545	12 ft/ 3.6m	Cable, Electrical 10/3	
5	1001101191	2	Connector, Strain Relief	
6	4460957	1	Block, Terminal	
8	1001181045	1	Breaker 30mA/16Amp	

FIGURE 8-37. BREAKER BOX KIT - 30MA/16 AMP (WITHOUT GENERATOR)

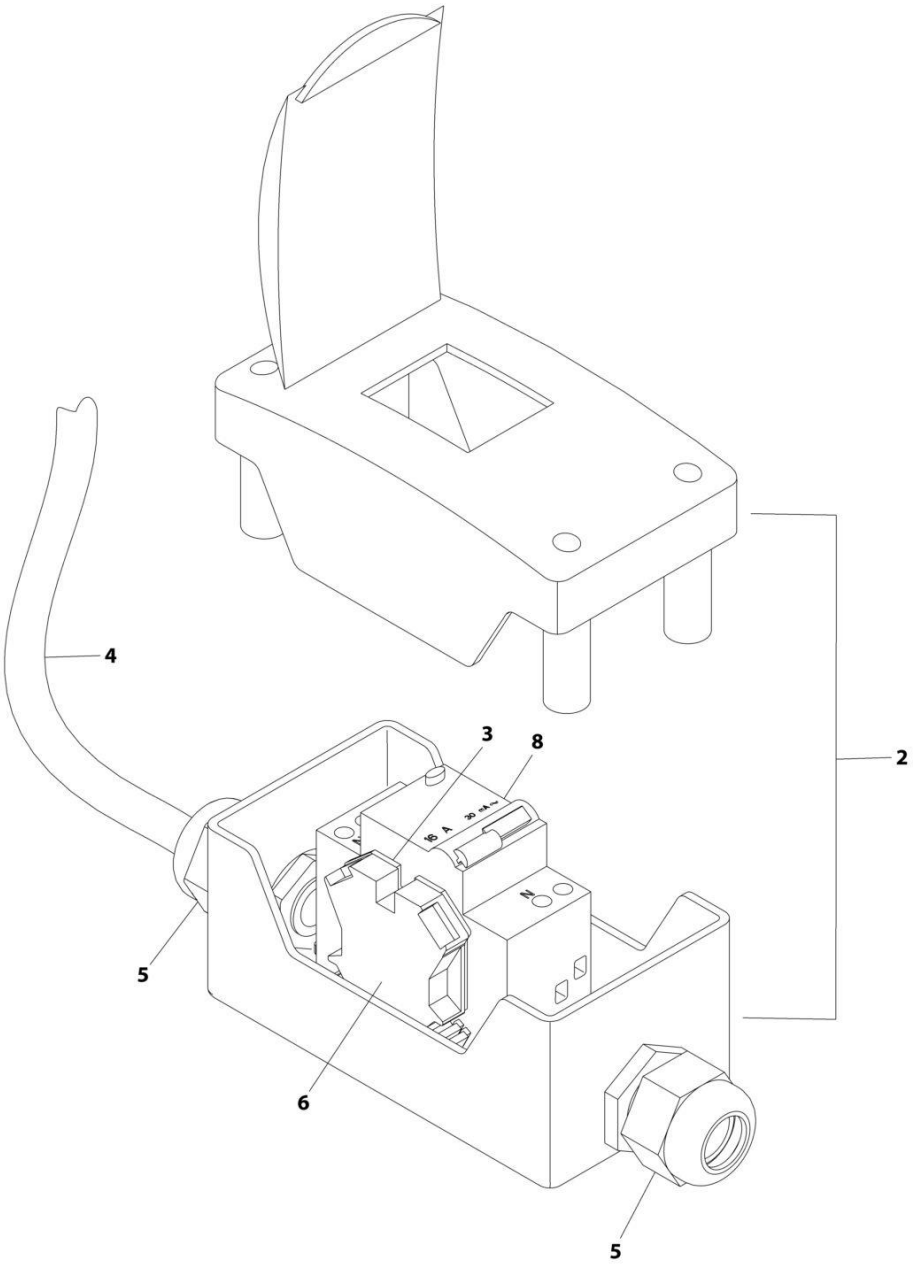

FIGURE 8-37. BREAKER BOX KIT - 30MA/16 AMP (WITHOUT GENERATOR)

ITEM	PART NUMBER	QTY	DESCRIPTION	REV
	1001096070	Ref	BREAKER BOX KIT	E
2	0861880	1	Box	
3	4460956	1	Barrier, Terminal Block End	
4	1060908	12 ft/ 3.6m	Cable, 12/3	
5	1001097150	2	Connector, Strain Relief	
6	4460957	1	Block, Terminal	
8	1001181045	1	Breaker, 16Amp	

FIGURE 8-38. CHASSIS POWER DISTRIBUTION HARNESS

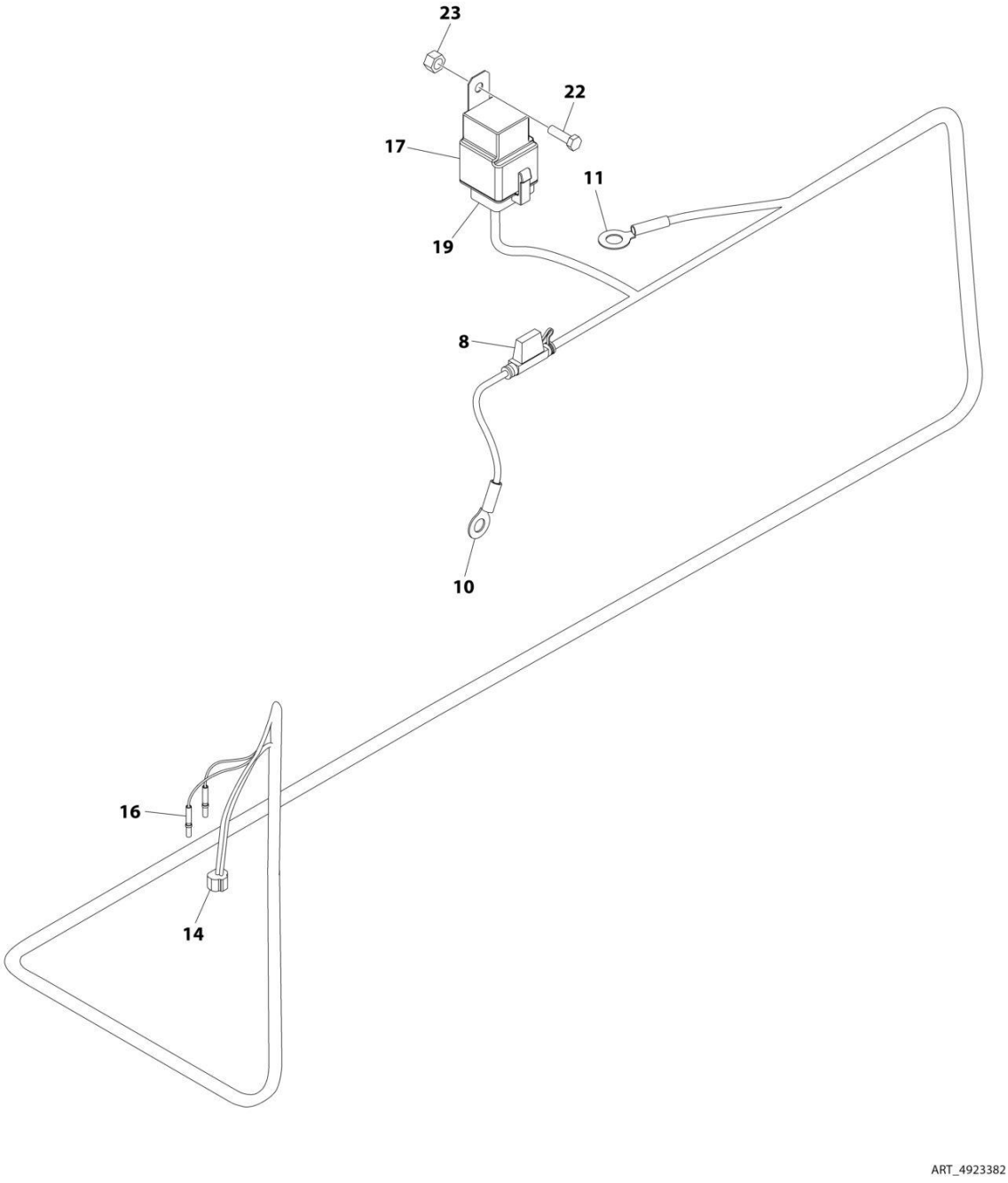

FIGURE 8-38. CHASSIS POWER DISTRIBUTION HARNESS

ITEM	PART NUMBER	QTY	DESCRIPTION	REV
	4923382	Ref	CHASSIS POWER DISTRIBUTION HARNESS	E
8	2400066	1	Fuseholder	
8	2400065	1	Fuse 30 Amp	
9	4240032	3	Tie-Strap (Not Shown)	
10	4460019	1	Terminal, Eyelet	
11	4460256	1	Terminal, Eyelet	
14	4460897	1	Connector - 2 Position	
14	4460464	2	Pin, Male	
16	4460942	2	Socket, Female	
17	3740080	1	Relay	
19	4460374	1	Plug, Sealed	
19	4460375	5	Terminal	
19	0100048	AR	Lubricant, Silicone	
22	0641408	1	Bolt 1/4 x 1	
23	3311405	1	Nut 1/4	

FIGURE 8-39. CHASSIS HARNESS ASSEMBLY

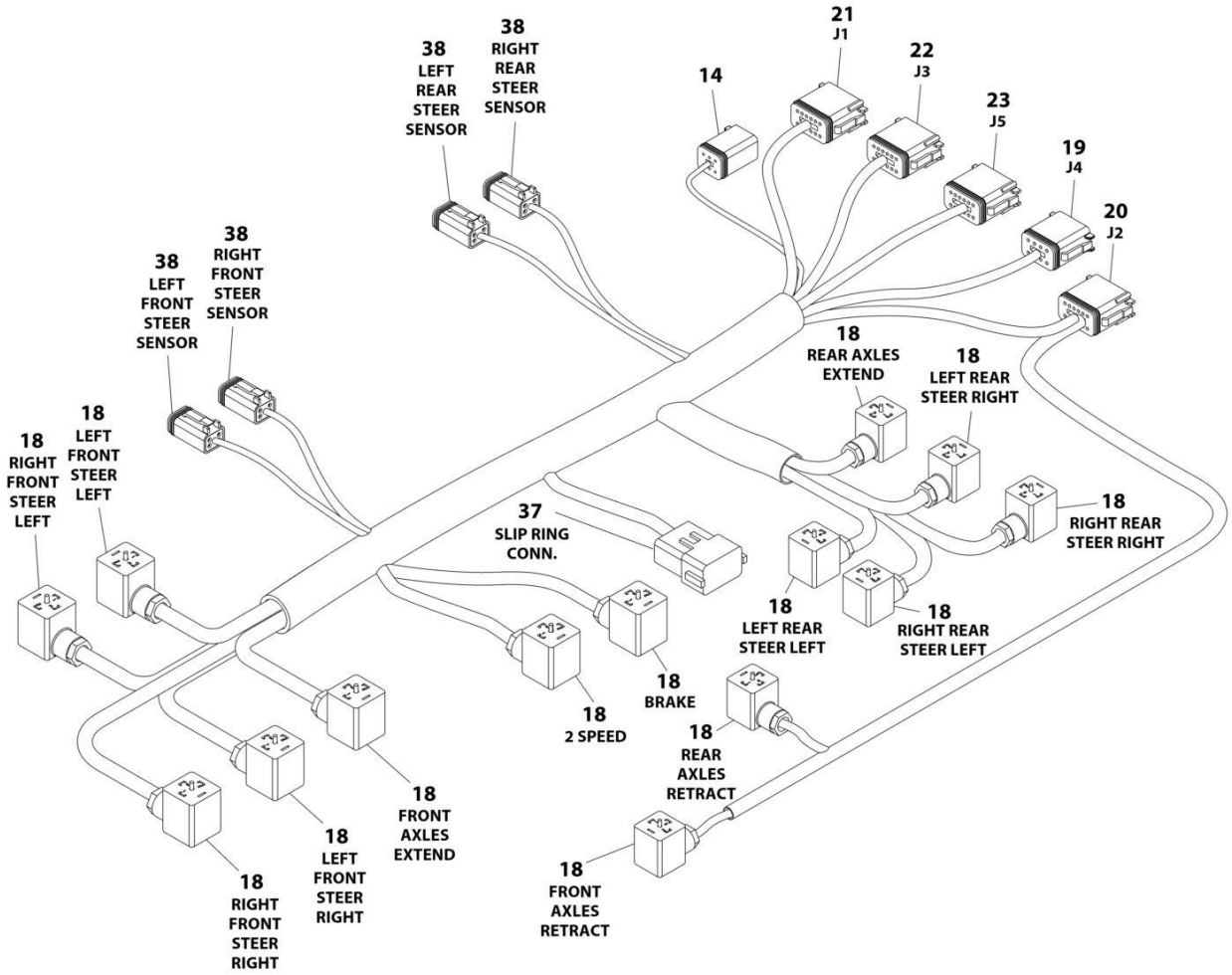

FIGURE 8-39. CHASSIS HARNESS ASSEMBLY

ITEM	PART NUMBER	QTY	DESCRIPTION	REV
	4922696	Ref	CHASSIS HARNESS ASSEMBLY	D
14	4460894	1	Connector - 6 Position	
14	4460465	6	Socket, Female	
14	4460892	1	Connector - 6 Position Buss Bar	
17	4460894	1	Connector - 6 Position (Not Shown)	
17	4460465	6	Socket, Female	
17	4460892	1	Connector - 6 Position Buss Bar	
18	4460880	14	DIN Connector	
19	4460930	1	Connector - 8 Position (Gray)	
19	4460465	1	Socket, Female	
19	4460466	7	Plug, Terminal	
20	4460836	1	Connector - 12 Position (Black)	
20	4460465	6	Socket, Female	
20	4460466	6	Plug, Terminal	
21	4460933	1	Connector - 12 Position (Gray)	
21	4460465	8	Socket, Female	
21	4460466	4	Plug, Terminal	
22	4460934	1	Connector - 12 Position (Green)	
22	4460944	12	Socket, Female	
23	4460935	1	Connector - 12 Position (Brown)	
23	4460465	8	Socket, Female	
25	4240032	10	Tie-Strap (Not Shown)	
26	4240033	15	Tie-Strap (Not Shown)	
37	4460950	1	Connector - 12 Position	
37	4460464	6	Pin, Male	
37	4460943	3	Pin, Male	
37	4460941	2	Pin, Male	
38	4460884	4	Connector - 4 Position (Gray)	
38	4460944	16	Socket, Female	

FIGURE 8-40. CLEARSKY READY HARNESS (DEUTZ TD2011, DEUTZ TCD2.9L4 & DEUTZ TCD2.9L4 (STAGE V PRE-BUY) ENGINES

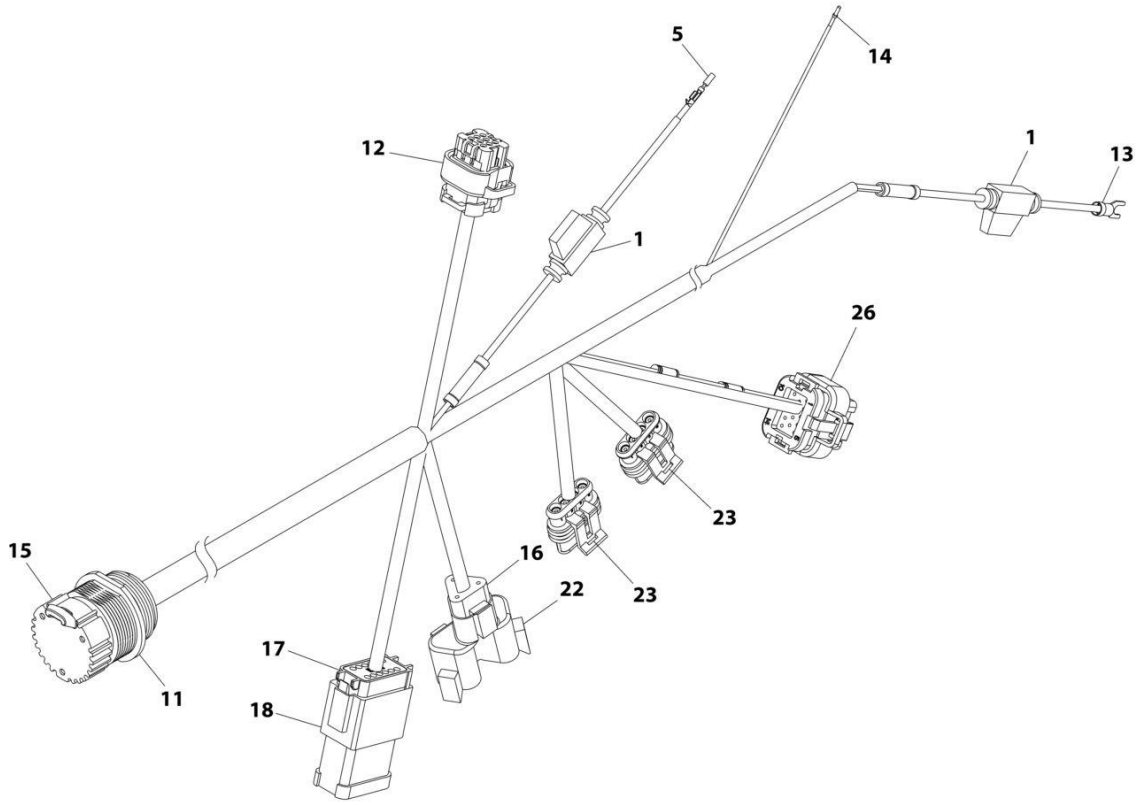

FIGURE 8-40. CLEARSKY READY HARNESS (DEUTZ TD2011, DEUTZ TCD2.9L4 & DEUTZ TCD2.9L4 (STAGE V PRE-BUY) ENGINES

ITEM	PART NUMBER	QTY	DESCRIPTION	REV
	1001279488	Ref	CLEARSKY READY HARNESS	A
1	2400060	2	Fuseholder with Cover	
1	2400064	2	Fuse 5Amp	
5	4460871	1	Socket, Female	
11	1001112612	1	Connector - 9 Position	
11	4460464	6	Pin, Male	
11	4460466	3	Plug, Sealing	
12	1001113961	1	Connector - 8 Position	
12	4460871	5	Socket, Female	
12	4460905	3	Plug, Sealing	
13	4460183	1	Terminal, Connector	
14	4460465	1	Socket, Female	
15	1001106736	1	Cap, Dust	
16	1001116812	1	Connector - 3 Position	
16	4460944	3	Pin, Male	
17	4460933	1	Connector - 12 Position	
17	4460465	12	Socket, Female	
18	1001119020	1	Terminal, Connector	
22	4460945	1	Connector, Female - 3 Way	
23	1001103012	2	Connector - 4 Position	
23	1001104498	8	Terminal, Wire Seal	
23	1001107854	8	Terminal, AMP Superseal Socket	
26	1001246859	1	Connector - 14 Position	
26	4460871	5	Terminal, Socket	
26	4460905	9	Plug, Sealing	

FIGURE 8-41. (CLEARSKY READY HARNESS (DEUTZ TCD2.9L4 (STAGE V) ENGINES)

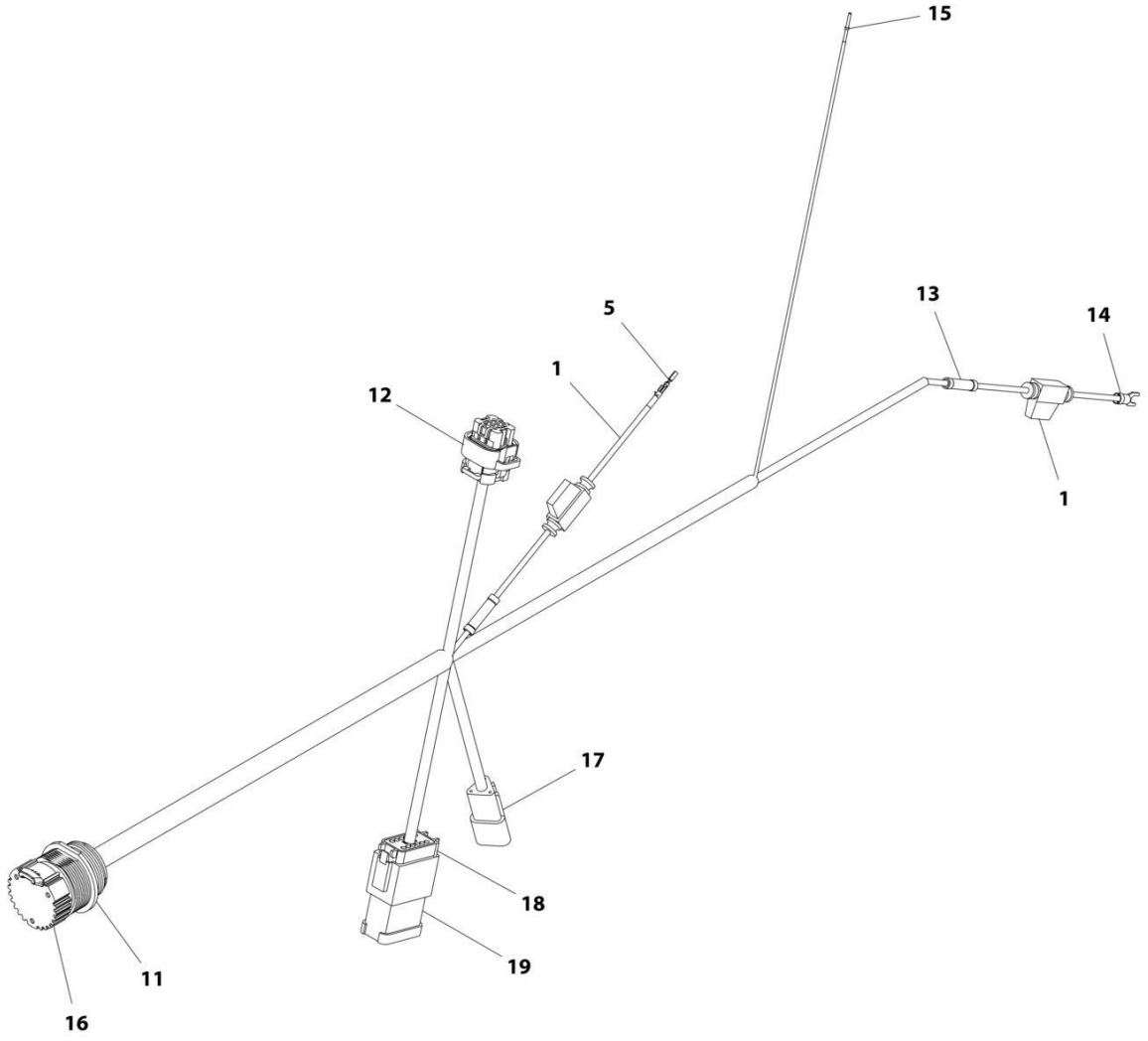

FIGURE 8-41. (CLEARSKY READY HARNESS (DEUTZ TCD2.9L4 (STAGE V) ENGINES)

ITEM	PART NUMBER	QTY	DESCRIPTION	REV
	1001114438	Ref	CLEARSKY READY HARNESS	A
1	2400060	2	Fuseholder with Cover	
1	2400064	2	Fuse 5Amp	
5	4460871	1	Socket, Female	
11	1001112612	1	Connector - 9 Position	
11	4460464	6	Pin, Male	
11	4460466	3	Plug, Sealing	
12	1001113961	1	Connector - 8 Position	
12	4460871	5	Socket, Female	
12	4460905	5	Plug, Sealing	
13	4460035	2	Terminal, Connector	
14	4460183	1	Terminal, Eyelet	
15	4460465	1	Socket, Female	
16	1001106736	1	Cap, Dust	
17	4460536	1	Connector - 3 Position	
17	4460464	3	Pin, Male	
18	4460933	1	Connector - 12 Position	
18	4460465	9	Socket, Female	
18	4460466	3	Plug, Sealing	
19	4460898	1	Connector Bussbar - 9 Position	

FIGURE 8-42. DUAL CAPACITY JIB POSITION SWITCH HARNESS

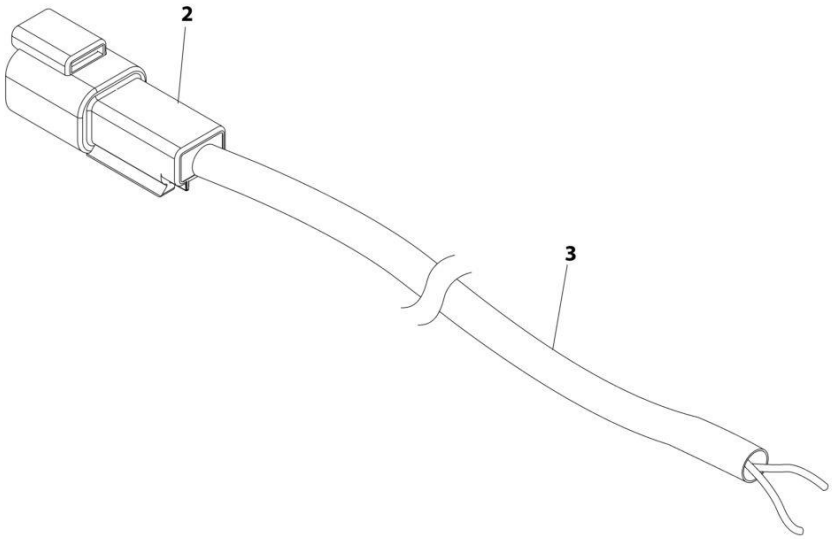

ART_4922785

FIGURE 8-42. DUAL CAPACITY JIB POSITION SWITCH HARNESS

ITEM	PART NUMBER	QTY	DESCRIPTION	REV
	4922785	Ref	DUAL CAPACITY JIB POSITION SWITCH HARNESS	C
2	4460897	1	Connector - 2 Position	
2	4460464	2	Pin, Male	
3	1060902	15 ft/ 4.5m	Cable, Electrical 18/2	

FIGURE 8-43. ENGINE HARNESS - DEUTZ TD2011 ENGINES

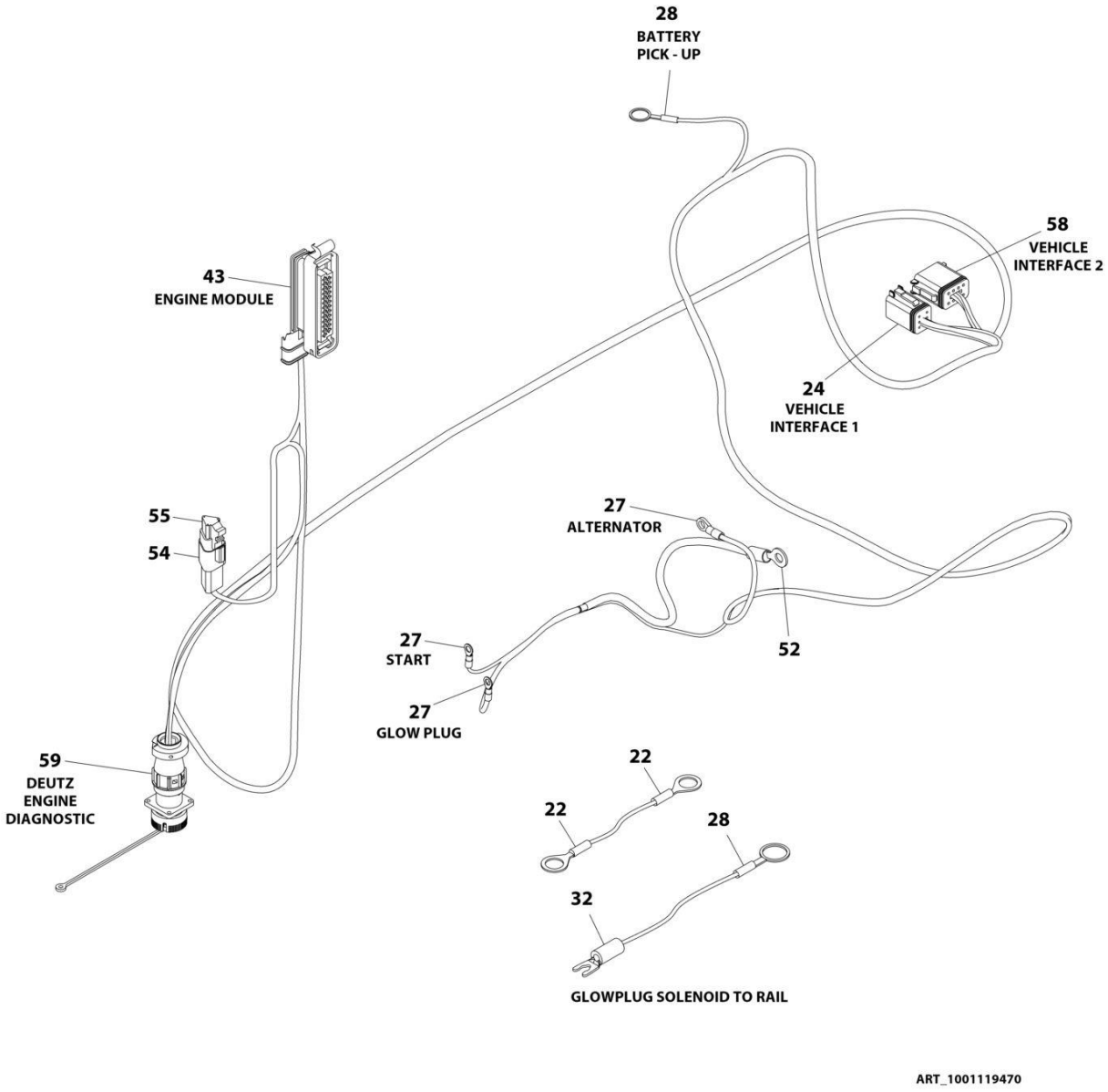

FIGURE 8-43. ENGINE HARNESS - DEUTZ TD2011 ENGINES

ITEM	PART NUMBER	QTY	DESCRIPTION	REV
	1001119470	Ref	ENGINE HARNESS - DEUTZ TD2011 ENGINES	B
22	4460702	2	Terminal, Eyelet	
24	4460894	1	Connector - 6 Position	
24	4460465	2	Socket, Female	
24	4460466	1	Plug, Terminal	
24	4460944	3	Socket, Female	
27	4460313	3	Terminal, Eyelet	
28	4460019	2	Terminal, Eyelet	
32	4460315	1	Terminal, Fork	
43	4461052	1	Connector - 25 Position	
43	4461005	5	Terminal	
43	4461006	5	Seal	
43	4461060	2	Terminal (Tin)	
43	4461054	2	Seal, Terminal	
43	4461008	18	Plug, Hole	
43	4461053	1	Cover, Plug	
50	4240032	AR	Tie-Strap (Not Shown)	
51	4240033	AR	Tie-Strap (Not Shown)	
52	4461097	1	Terminal, Eyelet	
54	4461095	1	Connector - 3 Position	
54	4460944	3	Socket, Female	
55	4461070	1	Connector with Resistor (3 Position)	
58	4460930	1	Connector - 8 Position	
58	4460465	2	Socket, Female	
58	4460466	6	Seal, Plug	
59	2902443	1	Kit, Receptacle	
59	4461071	8	Terminal, Female (Gold)	
59	4461072	1	Connector, Flange Mount	
59	4461073	1	Connector, Dust Cap	
59	4461074	1	Connector, Shell	

FIGURE 8-44. ENGINE HARNESS - DEUTZ TCD2.9L4 ENGINES AND DEUTZ TCD2.9L4 (STAGE V PRE-BUY) ENGINES

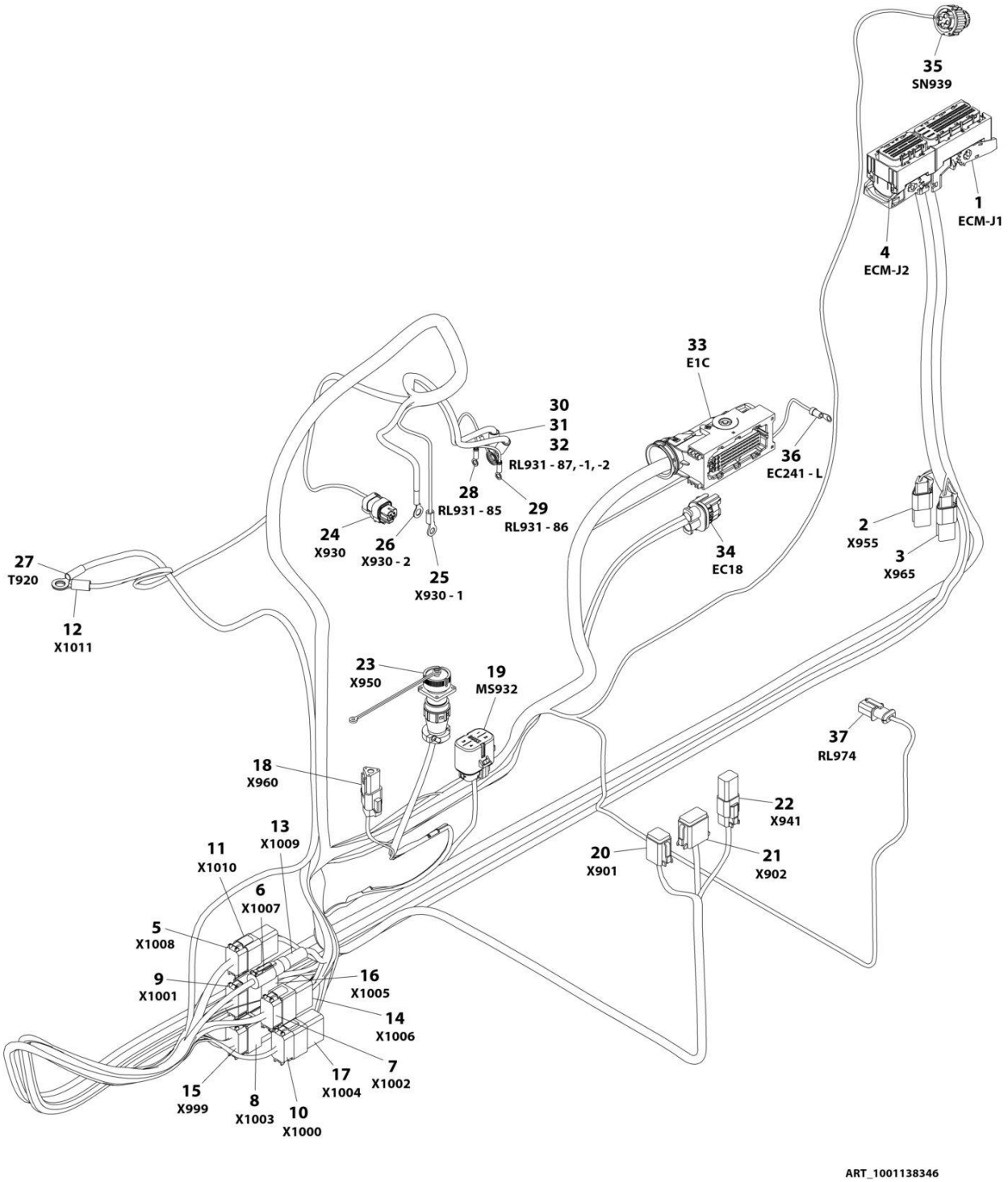

FIGURE 8-44. ENGINE HARNESS - DEUTZ TCD2.9L4 ENGINES AND DEUTZ TCD2.9L4 (STAGE V PRE-BUY) ENGINES

ITEM	PART NUMBER	QTY	DESCRIPTION	REV
	1001138346	Ref	ENGINE HARNESS - DEUTZ TCD2.9L4 ENGINES AND DEUTZ TCD2.9L4 (STAGE V PRE-BUY) ENGINES	H
1	1001133956	1	Connector (Includes Cover, Locks and Retention Plate)	
1	1001182361	6	Terminal	
1	1001230934	15	Terminal	
1	1001126351	1	Terminal	
1	1001256507	4	Terminal	
1	1001230936	3	Plug, Terminal	
1	1001230935	62	Plug, Terminal	
1	1001126352	6	Terminal	
1	1001126384	19	Terminal	
1	1001126357	3	Plug, Seal	
1	1001126356	65	Plug, Seal	
2	4461070	1	Connector with Resistor (3 Position)	
2	4461095	1	Connector - 3 Position	
2	4460944	2	Socket, Female	
2	4460466	1	Seal, Plug	
3	4461070	1	Connector with Resistor (3 Position)	
3	4461095	1	Connector - 3 Position	
3	4460944	2	Socket, Female	
3	4460466	1	Seal, Plug	
4	1001133957	1	Connector (Includes Cover, Locks and Retention Plate)	
4	1001126351	13	Terminal	
4	1001230934	11	Terminal	
4	1001252527	4	Terminal	
4	1001256507	2	Terminal	
4	1001230935	19	Plug, Terminal	
4	1001230936	11	Plug, Terminal	
5	4460930	1	Connector - 8 Position	
5	4460944	5	Socket, Female (Gold)	
5	4460465	2	Socket, Female	
5	4460466	1	Seal, Plug	
6	1001116707	1	Connector - 1 Position	
6	91143340	1	Terminal	
7	4460935	1	Plug, Brown - 12 Position	
7	4460465	12	Socket, Female	
8	4460970	1	Connector - 12 Position	
8	4460941	12	Pin, Male	
9	4460934	1	Connector, Green - 12 Position	
9	4460465	10	Socket, Female	
9	4460466	2	Seal, Plug	
10	4460836	1	Connector, Black - 12 Position	
10	4460465	8	Socket, Female	
10	4460466	4	Seal, Plug	
11	4460931	1	Connector - 8 Position (Gray)	
11	4460943	5	Pin, Male (Gold)	
11	4460466	3	Plug, Socket	
12	8220164	1	Terminal, Eyelet	
13	1001116967	1	Connector - 1 Position	

SECTION 8 - ELECTRICAL

ITEM	PART NUMBER	QTY	DESCRIPTION	REV
13	91143339	1	Terminal	
14	4460982	1	Connector - 12 Position	
14	4460464	12	Pin, Male	
15	4460933	1	Connector, Gray - 12 Position	
15	4460942	12	Socket, Female	
16	1001152742	1	Connector - 12 Position	
16	4460464	10	Pin, Male	
16	4460466	2	Seal, Plug	
17	4460950	1	Connector - 12 Position	
17	4460464	8	Pin, Male	
17	4460466	4	Plug, Seal	
18	4461070	1	Connector with Resistor (3 Position)	
18	4461095	1	Connector - 3 Position	
18	4460944	2	Socket, Female	
18	4460466	1	Seal, Plug	
19	80484084	1	Connector - 8 Position	
19	8229242	1	Fuse - 5A	
19	80983191	1	Fuse - 10A	
19	1001147264	1	Cap	
19	1001116728	4	Plug	
19	4460458	4	Seal	
20	4460894	1	Connector - 6 Position	
20	4460465	3	Socket, Female	
20	4460944	2	Socket, Female	
20	4460466	1	Seal, Plug	
21	4460930	1	Connector - 8 Position	
21	4460465	1	Socket, Female	
21	4460466	7	Plug, Seal	
22	1001220379	1	Connector - 4 Position	
22	4460465	2	Socket, Female	
22	4460942	2	Socket, Female	
22	4460932	1	Connector - 4 Position	
22	4460466	4	Seal, Plug	
23	2902443	1	Kit, Receptacle	
23	4461071	8	Terminal, Female (Gold)	
23	4461072	1	Connector, Flange Mount	
23	4461073	1	Connector, Dust Cap	
23	4461074	1	Connector, Shell	
24	1001116952	1	Connector - 2 Position	
24	4460465	2	Socket, Female	
25	4460043	1	Terminal, Eyelet	
26	1001117106	1	Terminal, Eyelet	
27	4460019	1	Terminal, Eyelet	
28	4460247	1	Terminal, Eyelet	
29	4460247	1	Terminal, Eyelet	
30	1001117107	1	Terminal, Eyelet	
31	1001117107	1	Terminal, Eyelet	
32	4460703	1	Terminal, Eyelet	
33	1001126362	1	Connector - 62 Position	
33	1001126363	23	Terminal	
33	1001256506	2	Seal	

ITEM	PART NUMBER	QTY	DESCRIPTION	REV
33	1001126364	21	Seal	
33	1001126392	10	Terminal	
33	1001223459	10	Seal	
33	1001126365	2	Terminal	
33	4461054	2	Seal	
33	1001126391	22	Plug, Terminal	
33	4461008	4	Plug, Cavity	
34	1001142938	1	Connector - 2 Position	
34	1001142940	2	Terminal, Female	
34	1001142941	2	Seal	
35	1001133714	1	Connector - 4 Position	
35	1001133715	3	Terminal, Female	
35	1001135650	1	Seal	
35	1001135651	1	Plug, Cavity	
36	4460042	1	Terminal, Eyelet	
37	1001138110	1	Connector - 2 Position	
37	1001138111	2	Socket, Female	
37	1001138113	2	Seal	

FIGURE 8-45. ENGINE HARNESS - DEUTZ TCD2.9L4 ENGINES AND DEUTZ TCD2.9L4 (STAGE V) ENGINES

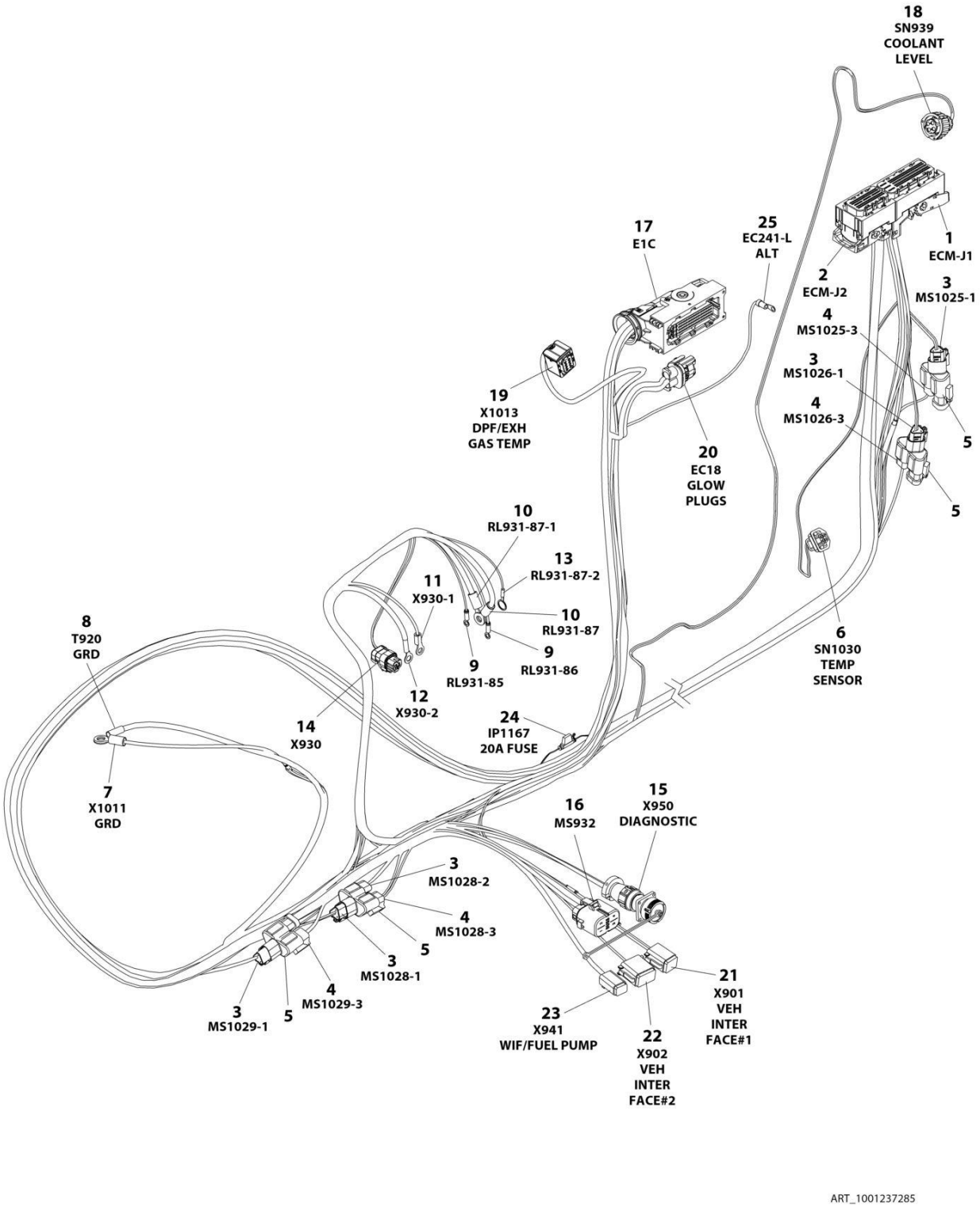

FIGURE 8-45. ENGINE HARNESS - DEUTZ TCD2.9L4 ENGINES AND DEUTZ TCD2.9L4 (STAGE V) ENGINES

ITEM	PART NUMBER	QTY	DESCRIPTION	REV
	1001237285	Ref	ENGINE HARNESS	G
1	1001133956	1	Connector (Includes Cover, Locks and Retention Plate)	
1	1001182361	6	Terminal	
1	1001230934	25	Terminal	
1	1001126351	3	Terminal	
1	1001252527	4	Terminal	
1	1001230935	55	Plug, Terminal	
1	1001230936	1	Plug, Terminal	
2	1001133957	1	Connector (Includes Cover, Locks and Retention Plate)	
2	1001126351	13	Terminal	
2	1001230934	26	Terminal	
2	1001230935	9	Terminal	
2	1001230936	11	Plug, Terminal	
3	1001116812	5	Plug, Male - 3 Position	
3	4460944	10	Socket, Female	
3	4460466	5	Plug, Terminal	
4	4460539	4	Plug, Male - 3 Position	
4	4460944	8	Socket, Female	
4	4460466	4	Plug, Terminal	
5	4460945	4	Connector - 3 Way	
6	1001126487	1	Connector - 3 Position	
6	1001167635	2	Terminal	
6	1001126485	2	Seal	
7	8220164	1	Terminal, Eyelet	
8	4460019	1	Terminal, Eyelet	
9	4460247	2	Terminal, Eyelet	
10	1001117107	2	Terminal, Eyelet	
11	4460043	1	Terminal, Eyelet	
12	1001117106	1	Terminal, Eyelet	
13	4460703	1	Terminal, Eyelet	
14	1001116952	1	Connector - 2 Position	
14	4460465	2	Socket, Female	
15	2902443	1	Kit, Receptacle	
15	4461071	8	Terminal, Female (Gold)	
15	4461072	1	Connector, Flange Mount	
15	4461073	1	Connector, Dust Cap	
15	4461074	1	Connector, Shell	
16	80484084	1	Connector - 8 Position	
16	4460748	4	Plug, Terminal	
16	4460746	3	Terminal	
16	1001234800	1	Terminal	
16	4460458	4	Seal	
17	1001126362	1	Connector - 62 Position	
17	1001126363	36	Terminal	
17	1001126364	36	Seal	
17	1001126391	7	Plug, Terminal	
17	4461008	4	Plug, Cavity	
17	1001126392	12	Terminal	
17	1001223459	12	Seal	

SECTION 8 - ELECTRICAL

ITEM	PART NUMBER	QTY	DESCRIPTION	REV
17	1001167632	2	Terminal	
17	4461054	2	Seal	
18	1001133714	1	Connector - 4 Position	
18	1001133715	3	Terminal, Female	
18	1001135650	1	Seal	
18	1001135651	1	Plug, Cavity	
19	1001239202	1	Connector - 8 Position	
19	1001126363	7	Terminal	
19	1001126364	7	Seal	
19	1001135651	1	Plug, Terminal	
20	1001142938	1	Connector - 2 Position	
20	1001142940	2	Terminal, Female	
20	1001142941	2	Seal	
21	4460894	1	Connector - 6 Position	
21	4460465	2	Socket, Female	
21	4460944	2	Socket, Female	
21	4460466	2	Seal, Plug	
22	4460930	1	Connector - 8 Position	
22	4460465	1	Socket, Female	
22	4460466	7	Seal, Plug	
23	4460884	1	Connector - 4 Position	
23	4460465	2	Socket, Female	
23	4460942	2	Socket, Female	
24	1001170764	1	Fuseholder with Cover and 20AMP Fuse	
24	1001197719	1	Resistor 620ohm/5 watt	
25	4460042	1	Terminal, Eyelet	

FIGURE 8-46. FUEL FILTER HARNESS - DEUTZ TCD2.9L4 ENGINES AND DEUTZ TCD2.9L4 (STAGE V) ENGINES

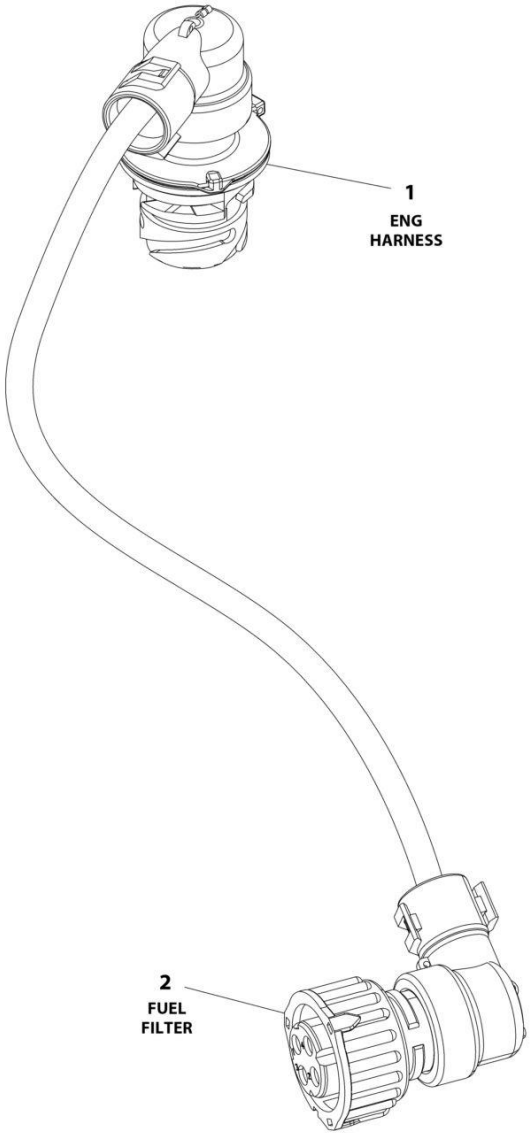

FIGURE 8-46. FUEL FILTER HARNESS - DEUTZ TCD2.9L4 ENGINES AND DEUTZ TCD2.9L4 (STAGE V) ENGINES

ITEM	PART NUMBER	QTY	DESCRIPTION	REV
	1001148843	Ref	FUEL FILTER HARNESS - DEUTZ TCD2.9L4 ENGINES	A
1	1001148842	1	Connector - 4 Position	
1	1001148841	4	Pin, Male	
1	1001135650	4	Seal	
2	1001133714	1	Plug, Male - 4 Position	
2	1001133715	4	Socket, Female	
2	1001135650	4	Seal	

FIGURE 8-47. FUEL HARNESS - DEUTZ TCD2.9L4 ENGINES, DEUTZ TCD2.9L4 (STAGE V PRE-BUY) ENGINES AND DEUTZ TCD2.9L4 (STAGE V) ENGINES

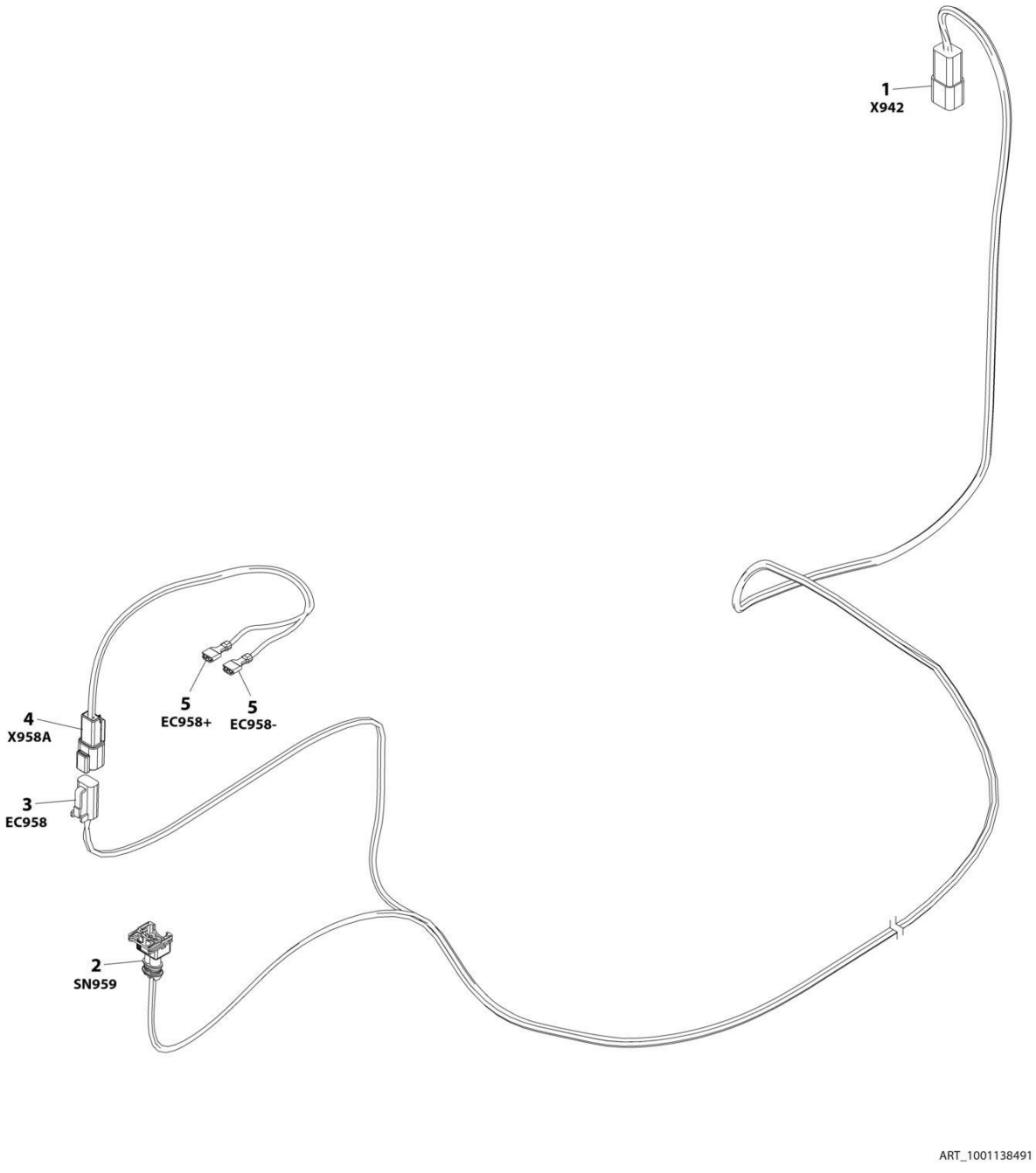

FIGURE 8-47. FUEL HARNESS - DEUTZ TCD2.9L4 ENGINES, DEUTZ TCD2.9L4 (STAGE V PRE-BUY) ENGINES AND DEUTZ TCD2.9L4 (STAGE V) ENGINES

ITEM	PART NUMBER	QTY	DESCRIPTION	REV
	1001138491	Ref	FUEL PUMP HARNESS	D
1	4460932	1	Receptacle, Female - 4 Position	
1	4460941	2	Pin, Male	
1	4460464	2	Pin, Male	
2	1001116983	1	Plug, Male - 2 Position	
2	1001116710	2	Socket, Female	
2	4461054	2	Seal	
3	4460891	1	Plug, Male - 2 Position	
3	4460942	2	Socket, Female	
4	4460897	1	Connector - 2 Position	
4	4460941	2	Pin, Male	
5	8220051	2	Terminal, Ring	

FIGURE 8-48. GENERATOR HARNESS - 4000W GENERATOR

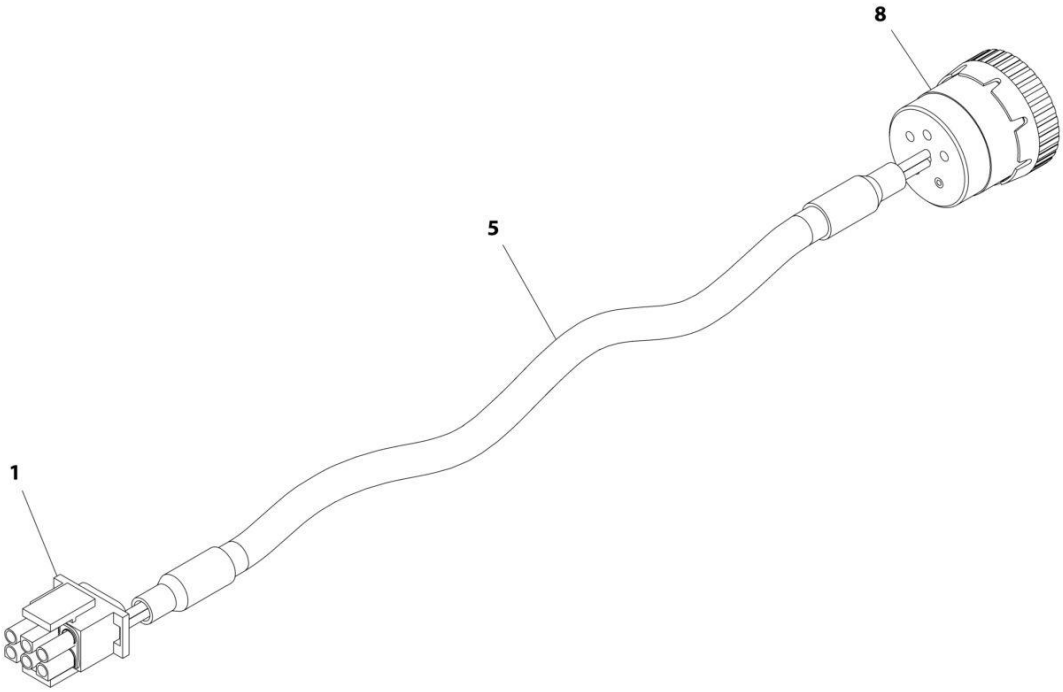

FIGURE 8-48. GENERATOR HARNESS - 4000W GENERATOR

ITEM	PART NUMBER	QTY	DESCRIPTION	REV
	1001152533	Ref	GENERATOR HARNESS - 4000W GENERATOR	A
1	4460225	1	Connector - 6 Position	
1	4460268	2	Socket, Female	
1	4460807	1	Seal, Plug	
1	4460808	1	Seal, Plug	
5	1060341	8 ft /2.4m	Cable, 16/2	
8	77363233	1	Connector - 6 Position	
8	4460465	2	Socket, Female	

FIGURE 8-49. GENERATOR CABLE HARNESS - 7500W GENERATOR

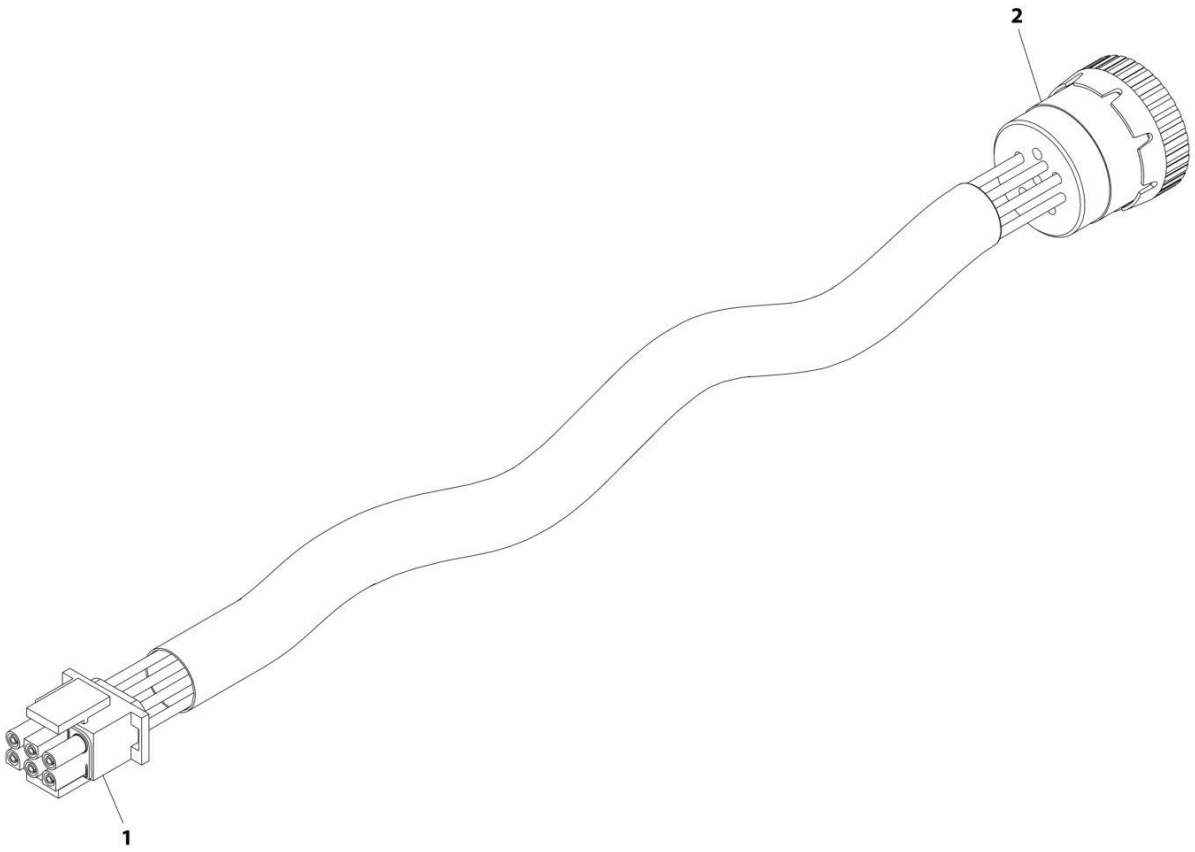

FIGURE 8-49. GENERATOR CABLE HARNESS - 7500W GENERATOR

ITEM	PART NUMBER	QTY	DESCRIPTION	REV
	4922972	Ref	GENERATOR HARNESS - 7500W GENERATOR	C
1	4460225	1	Connector - 6 Position	
1	4460268	6	Socket, Female	
1	4460807	1	Seal, Plug	
1	4460808	1	Seal, Plug	
2	77363233	1	Connector - 6 Position	
2	4460465	6	Socket, Female	

FIGURE 8-50. GROUND CONTROL BOX HARNESS

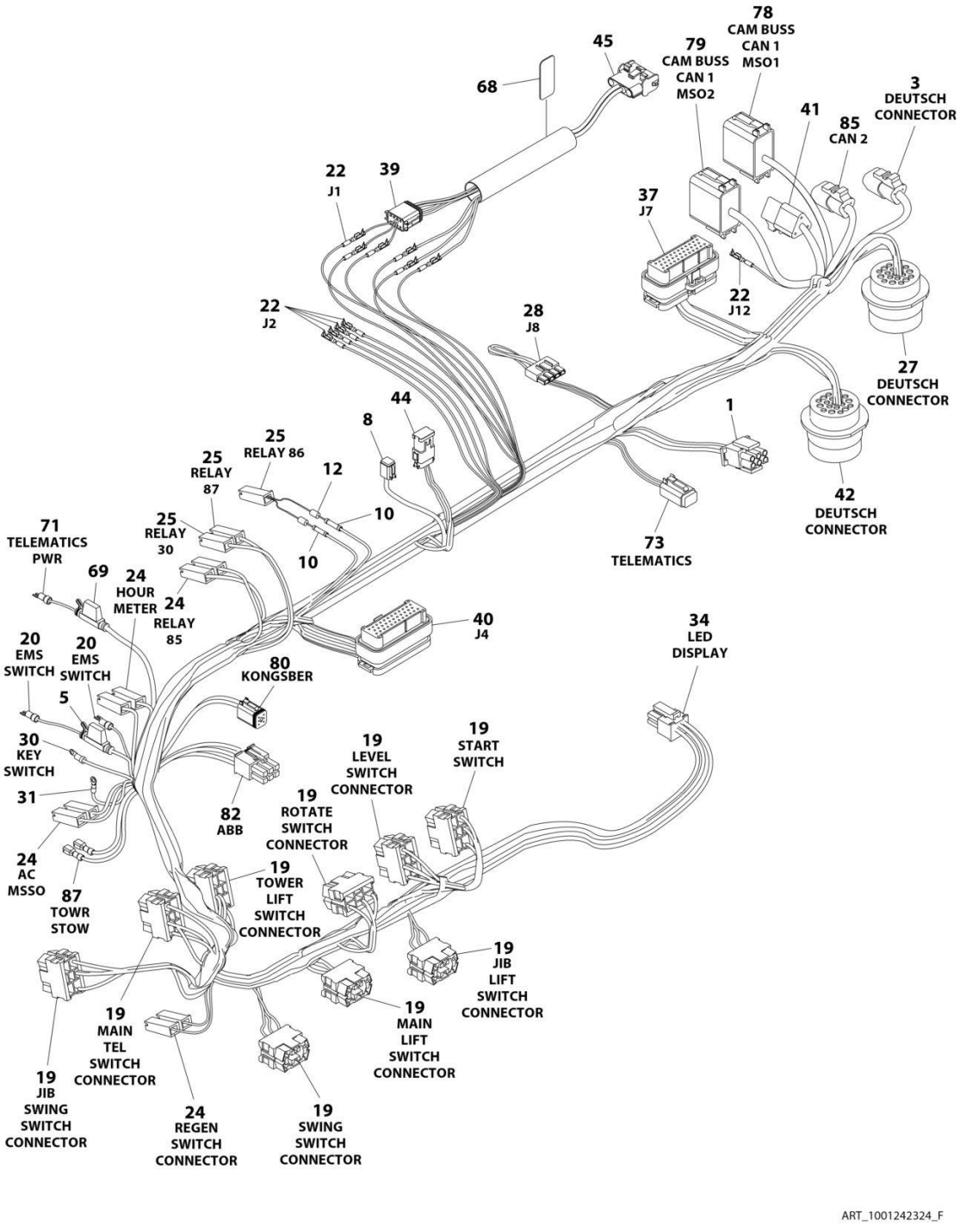

FIGURE 8-50. GROUND CONTROL BOX HARNESS

ITEM	PART NUMBER	QTY	DESCRIPTION	REV
	1001242324	Ref	GROUND CONTROL BOX HARNESS	F
1	4460225	1	Connector - 6 Position	
1	4460227	5	Pin, Male	
3	4460965	1	Connector - 3 Position (Blue Lock)	
3	4460944	3	Socket, Female	
3	4922099	AR	Cable, Can-Buss	
5	2400066	1	Fuseholder with Cover	
5	2400065	1	Fuse	
8	4460894	1	Connector - 6 Position	
8	4460465	1	Socket, Female 16-18GA	
8	4460942	1	Socket, Female 14-16 GA	
10	4460474	2	Terminal, Connector	
12	3990001	2	Diode - 3 Amp	
19	4460418	9	Connector, Female - 6 Position	
19	4460419	9	Socket, Female	
19	1001159186	16	Socket, Female	
20	4460806	6	Terminal, Fork	
22	4460871	20	Socket, Female	
24	4460260	7	Terminal, Housing	
24	4460259	7	Terminal	
25	4460260	3	Terminal, Housing	
25	4460297	3	Terminal	
27	4460866	1	Connector - 19 Pin	
27	4460464	10	Pin, Male	
27	4460508	3	Pin, Male	
28	4460878	1	Connector - 4 Position	
28	4460887	3	Terminal	
30	4460142	3	Terminal, Eyelet	
31	4460313	3	Terminal, Eyelet	
34	1001237667	1	Connector - 6 Position	
34	1001237668	5	Terminal	
37	4460873	1	Connector, Black - 35 Position	
37	4460871	17	Socket, Female	
39	4460930	1	Connector - 8 Position	
39	4460944	6	Socket, Female	
40	4460876	1	Connector, Blue - 35 Position	
40	4460871	24	Socket, Female	
41	4460951	1	Connector - 3 Position	
41	4460944	1	Socket, Female	
41	4922099	AR	Cable, Can-Buss	
41	1001003498	1	Lock, Plug	
42	4460613	1	Connector - 21 Pin	
42	4460464	8	Pin, Male Deutsch 16 Ga	
42	4460941	2	Pin, Male Deutsch 14 Ga	
44	4460836	1	Connector - 12 Position	
44	4460465	3	Socket, Female 16-18GA	
44	4460942	2	Socket, Female 14-16 GA	
45	4460761	1	Connector - 4 Position	
45	4460227	4	Pin, Male	
68	1001096076	1	Decal - Troubleshooting	

SECTION 8 - ELECTRICAL

ITEM	PART NUMBER	QTY	DESCRIPTION	REV
69	2400060	1	Fuse, Holder	
69	8229242	1	Fuse, 5Amp	
71	4460888	1	Terminal, Fork	
73	4460884	1	Connector - 4 Position	
73	4460465	4	Socket, Female	
73	1001192401	1	Connector, Dust Cap	
78	4460933	1	Connector - 12 Position (Gray)	
78	4460944	11	Socket, Female	
78	4460466	1	Plug, Terminal	
78	1001119020	1	Bussbar - 12 Position	
79	4460933	1	Connector - 12 Position (Gray)	
79	4460944	5	Socket, Female	
79	4460466	7	Plug, Terminal	
79	1001119020	1	Bussbar - 12 Position	
80	4460894	1	Connector - 6 Position	
80	4460465	4	Socket, Female	
80	4460466	2	Plug, Terminal	
82	4460868	1	Connector - 6 Position	
82	4460877	4	Terminal	
85	1001116812	1	Connector - 3 Position	
85	4460944	3	Socket, Female	
87	1001201885	2	Terminal	

FIGURE 8-51. GROUND CONTROLS TO ENGINE HARNESS

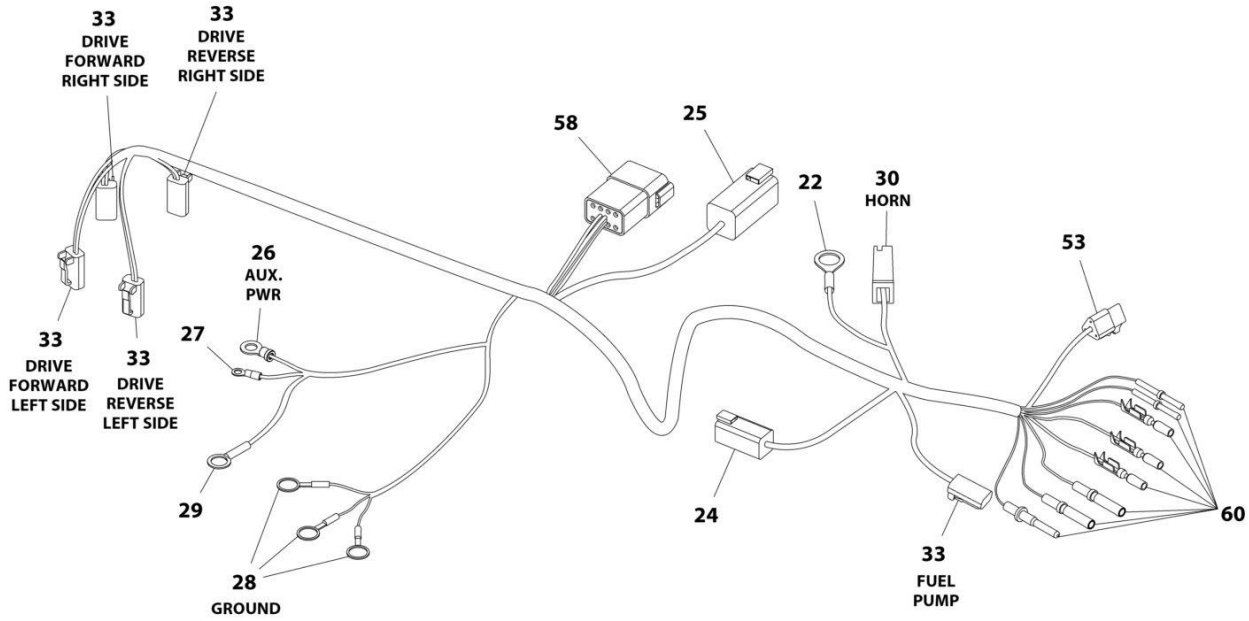

FIGURE 8-51. GROUND CONTROLS TO ENGINE HARNESS

ITEM	PART NUMBER	QTY	DESCRIPTION	REV
	1001119529	Ref	GROUND CONTROLS TO ENGINE HARNESS	D
22	4460702	1	Terminal, Eyelet	
24	4460899	1	Connector - 6 Position	
24	4460464	5	Pin, Male	
24	4460466	1	Plug, Terminal	
25	4460899	1	Connector - 6 Position	
25	4460464	4	Pin, Male	
25	4460943	2	Pin, Male (Gold)	
26	4460312	1	Terminal, Eyelet	
27	4460313	1	Terminal, Eyelet	
28	4460019	3	Terminal, Eyelet	
29	4460256	1	Terminal, Eyelet	
30	4460260	1	Terminal, Housing	
30	4460259	1	Terminal	
33	4460891	5	Connector - 2 Position	
33	4460465	10	Socket, Female	
53	4460539	1	Connector - 3 Position	
53	4460944	3	Socket, Female	
58	4460931	1	Connector - 8 Position	
58	4460464	8	Pin, Male	
60	4460465	2	Socket, Female	
60	4460887	1	Terminal (12 Gauge)	
60	4460871	12	Socket, Female	
60	4460508	1	Pin, Male	

FIGURE 8-52. JIB STOW SWITCH HARNESS

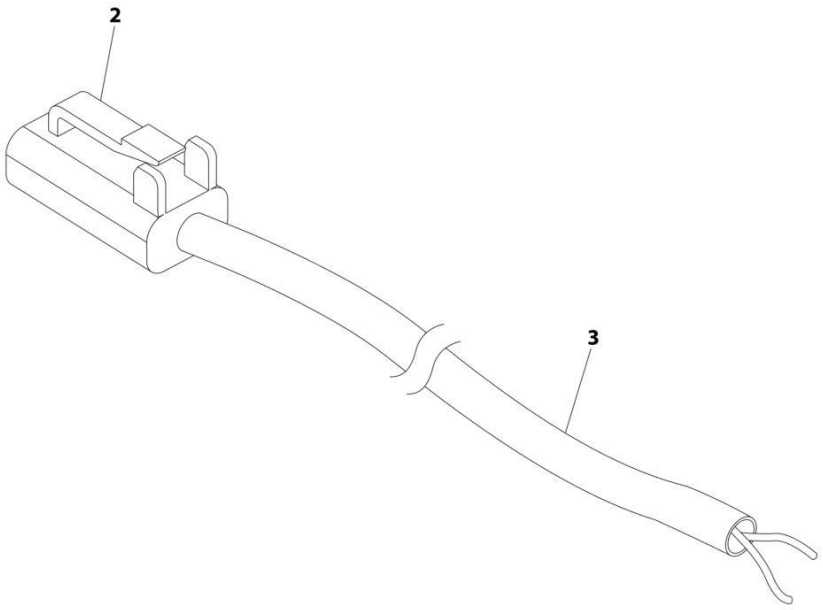

FIGURE 8-52. JIB STOW SWITCH HARNESS

ITEM	PART NUMBER	QTY	DESCRIPTION	REV
	4922784	Ref	JIB STOW SWITCH HARNESS	C
2	4460891	1	Connector - 2 Position	
2	4460465	2	Socket, Female	
3	1060902	15 ft/ 4.6m	Cable, Electrical 18/2	

FIGURE 8-53. LOAD SENSING PIN HARNESS

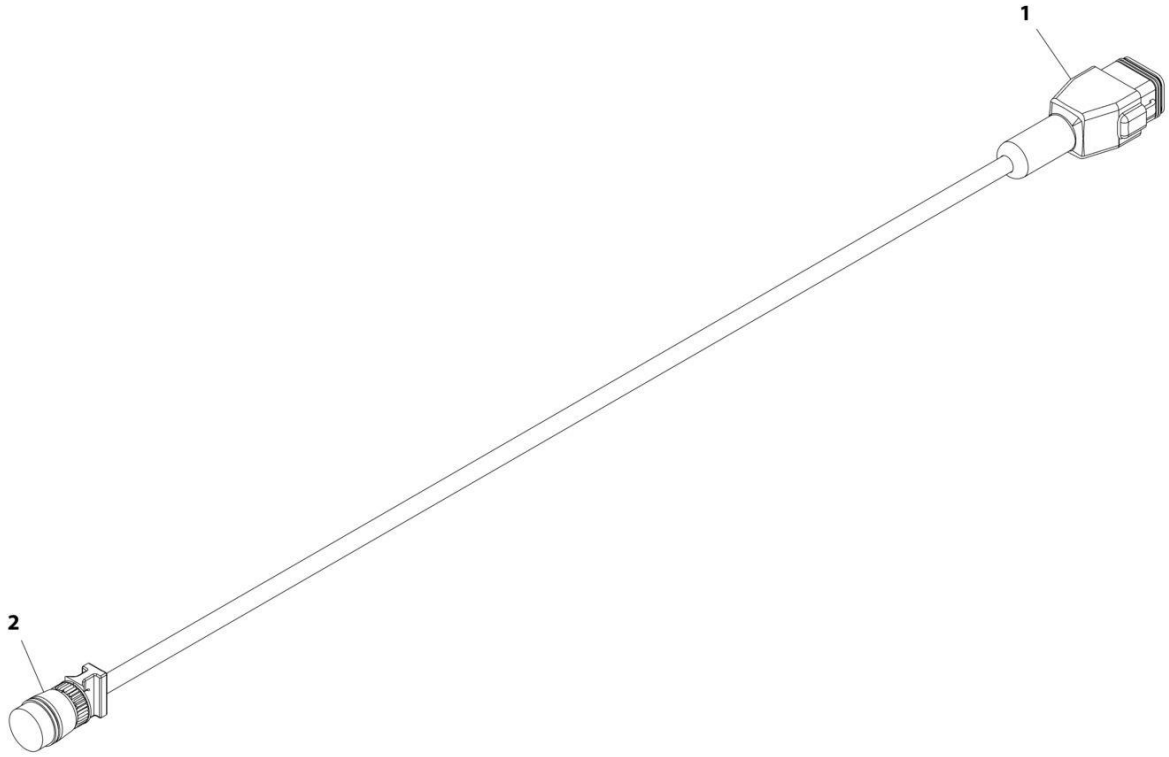

FIGURE 8-53. LOAD SENSING PIN HARNESS

ITEM	PART NUMBER	QTY	DESCRIPTION	REV
	4923256	Ref	LOAD SENSING PIN HARNESS	C
1	4460930	1	Connector - 8 Position (Gray)	
1	4460465	4	Socket, Female	
1	4460466	3	Plug, Sealing	
2	See Note	NSS	Connector - 4 Position (Note: Not Available for Purchase)	
2	See Note	NSS	Terminal (Note: Not Available for Purchase)	

FIGURE 8-54. LOCKOUT VALVE HARNESS

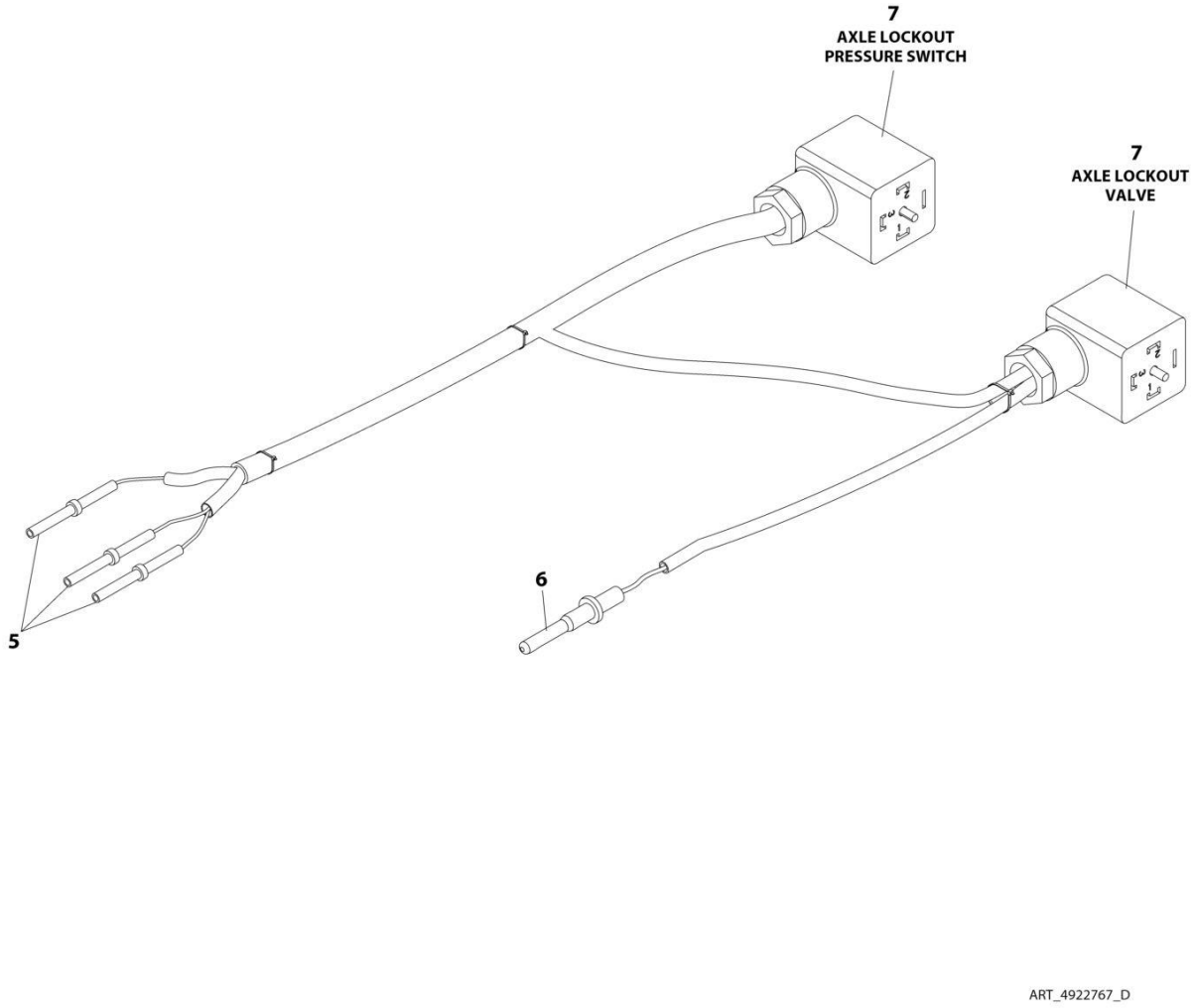

FIGURE 8-54. LOCKOUT VALVE HARNESS

ITEM	PART NUMBER	QTY	DESCRIPTION	REV
	4922767	Ref	LOCKOUT VALVE HARNESS	D
5	4460465	3	Socket, Female	
6	4460464	1	Pin, Male	
7	1001263923	2	Connector, Din	
8	4240033	6	Tie-Strap (Not Shown)	

FIGURE 8-55. MAIN BOOM CONTROL CABLE HARNESS

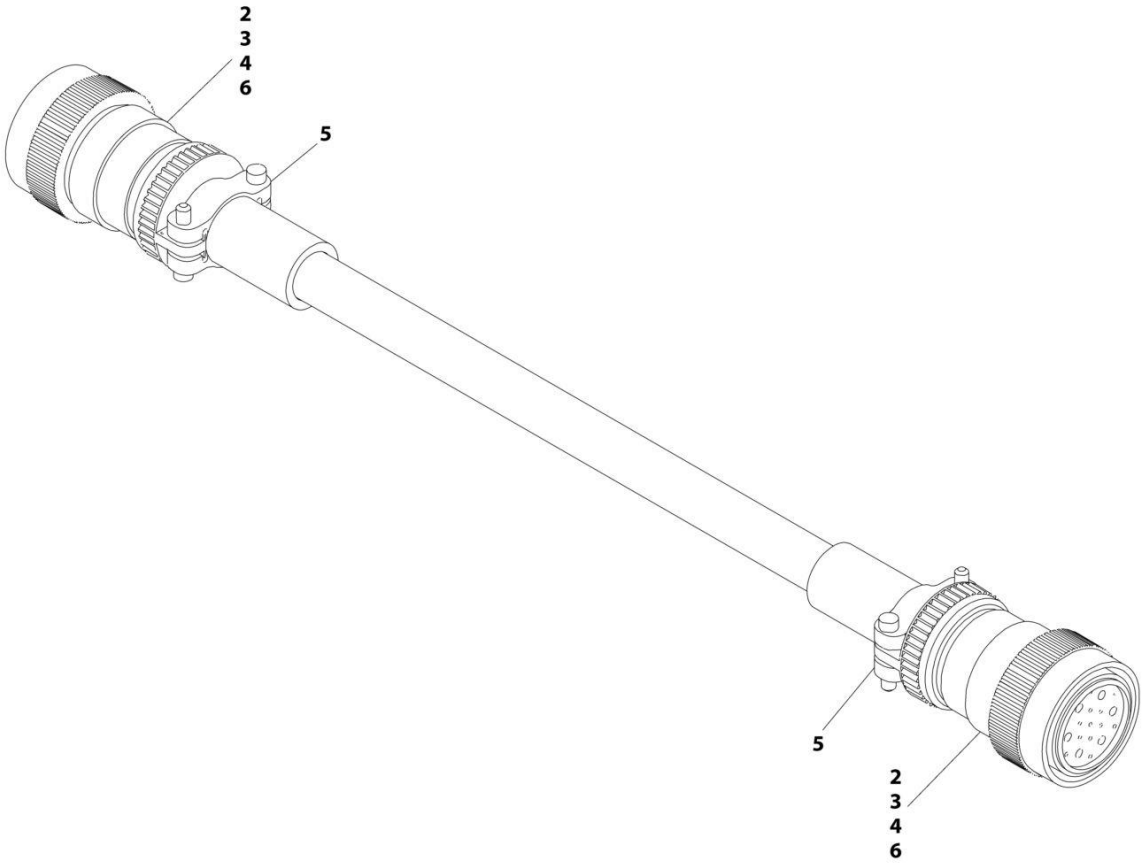

FIGURE 8-55. MAIN BOOM CONTROL CABLE HARNESS

ITEM	PART NUMBER	QTY	DESCRIPTION	REV
	4922955	Ref	MAIN BOOM CONTROL CABLE HARNESS	D
2	4460465	22	Socket, Female	
3	4460865	2	Connector - 19 Position	
4	4460509	8	Socket, Female	
5	4460473	2	Clamp	
6	4460466	8	Plug, Socket	

FIGURE 8-56. MAIN BOOM DUAL CAPACITY SWITCH HARNESS

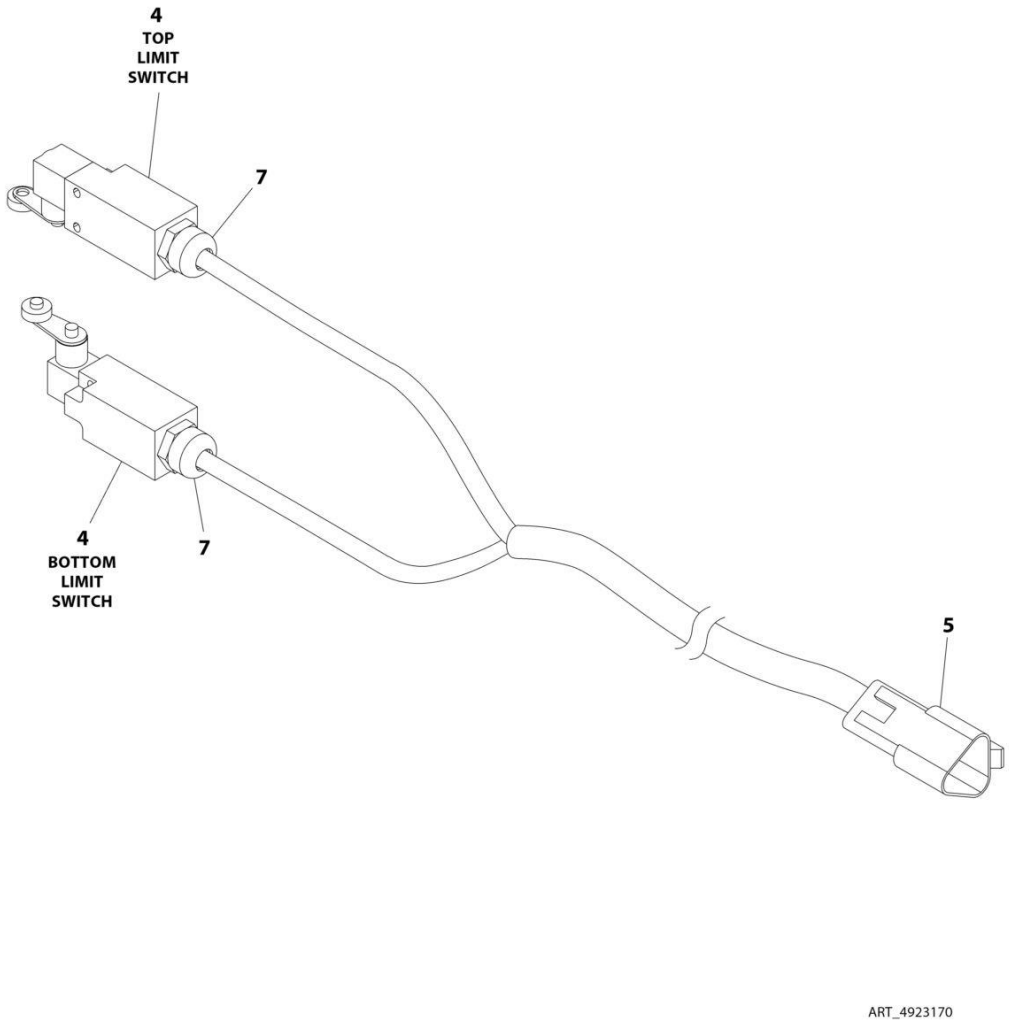

FIGURE 8-56. MAIN BOOM DUAL CAPACITY SWITCH HARNESS

ITEM	PART NUMBER	QTY	DESCRIPTION	REV
	4923170	Ref	MAIN BOOM DUAL CAPACITY SWITCH HARNESS	C
4	4360578	2	Switch, Limit	
5	4460536	1	Connector - 3 Position	
5	4460943	3	Pin, Male (Gold)	
7	4460968	2	Connector, Strain Relief	

FIGURE 8-57. MAIN BOOM TRANSPORT SWITCH HARNESS

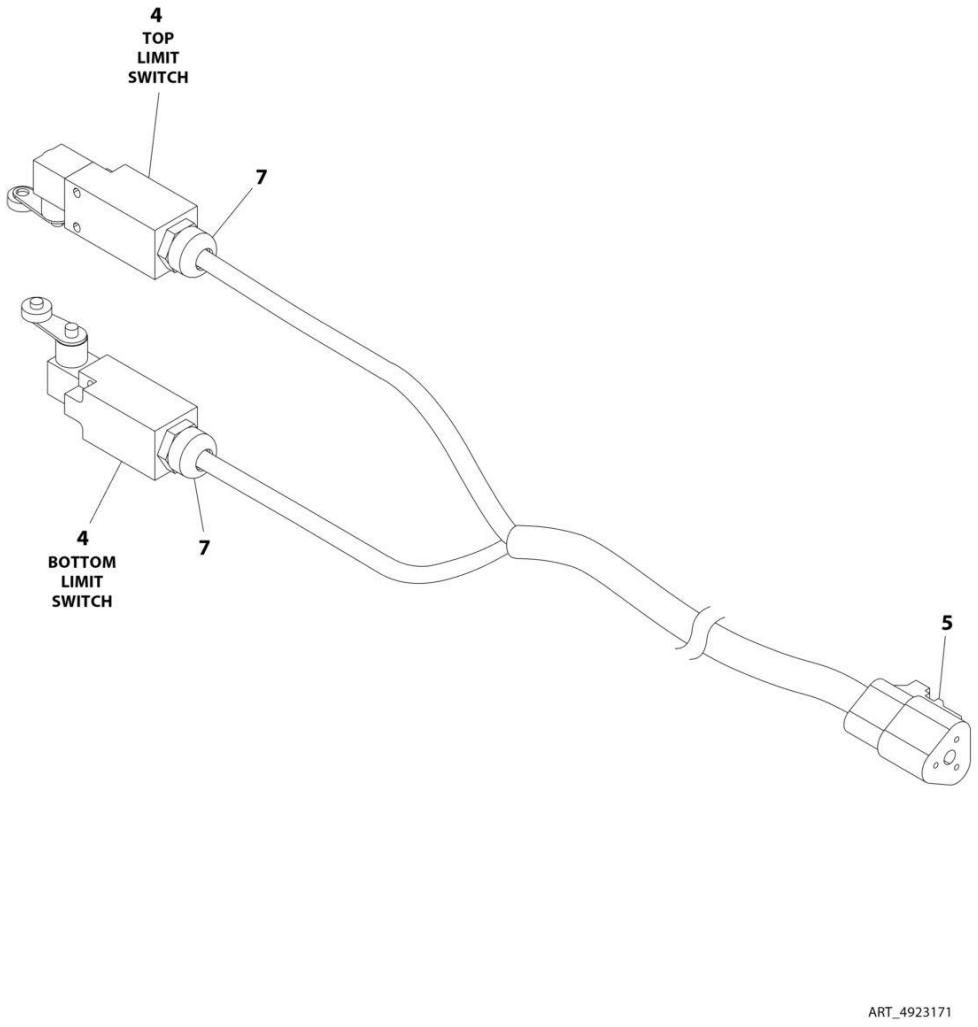

FIGURE 8-57. MAIN BOOM TRANSPORT SWITCH HARNESS

ITEM	PART NUMBER	QTY	DESCRIPTION	REV
	4923171	Ref	MAIN BOOM TRANSPORT SWITCH HARNESS	C
4	4360578	2	Switch, Limit	
5	4460539	1	Connector - 3 Position	
5	4460944	3	Socket, Female (Gold)	
7	4460968	2	Connector, Strain Relief	

FIGURE 8-58. MAIN VALVE HARNESS

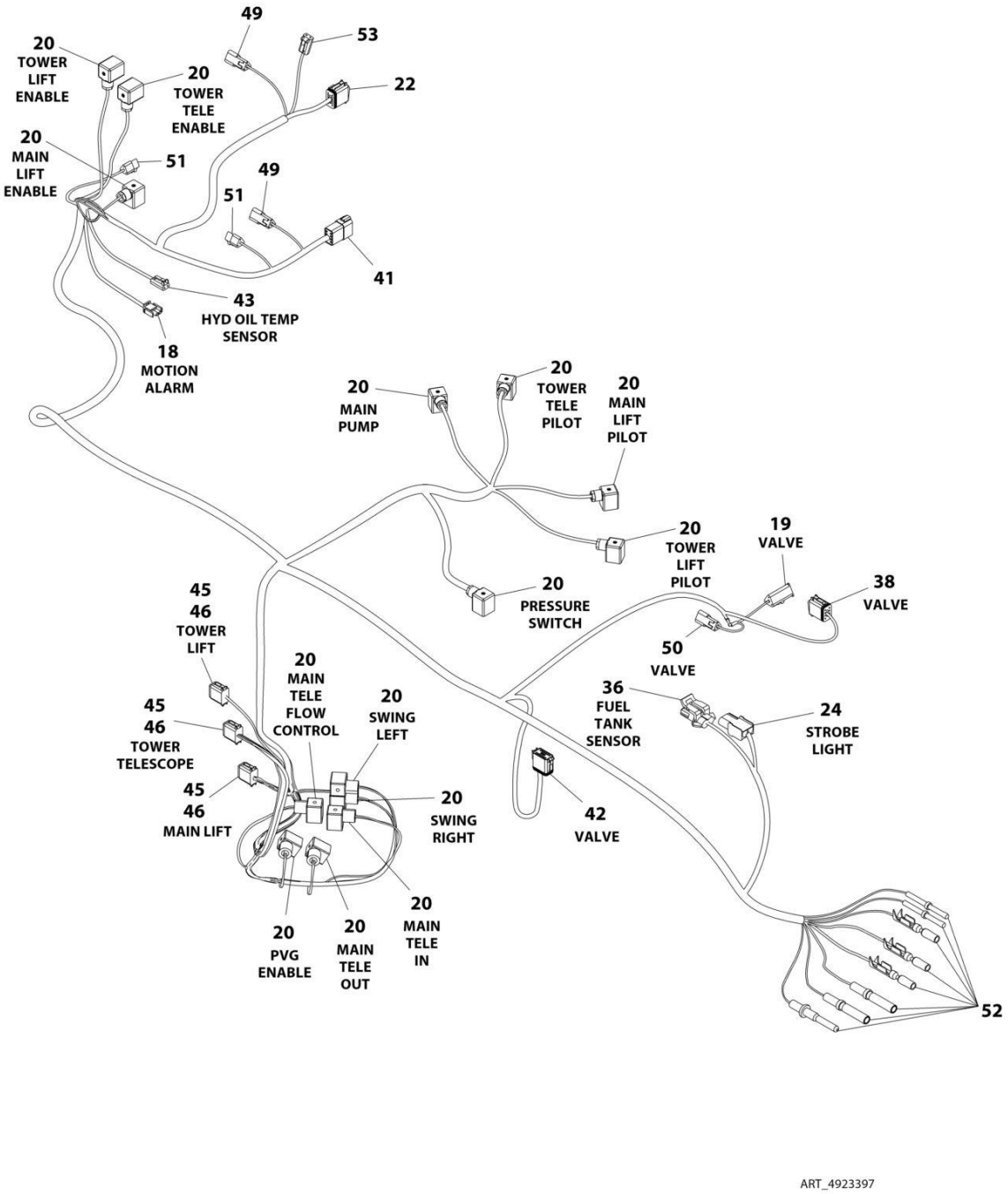

FIGURE 8-58. MAIN VALVE HARNESS

ITEM	PART NUMBER	QTY	DESCRIPTION	REV
	4923397	Ref	MAIN VALVE HARNESS	E
18	4460320	1	Connector - 2 Position	
18	4460267	2	Pin, Male	
19	4460965	1	Connector - 3 Position	
19	4460944	3	Socket, Female	
20	4460880	14	DIN Connector (with Diode)	
	1001263923	1	DIN COnnector (without Diode)	
22	4460836	1	Connector - 12 Position (Black)	
22	4460465	3	Socket, Female	
22	4460466	4	Plug, Socket	
22	4460944	3	Socket, Female 16-18 GA (Gold)	
22	4460942	2	Socket, Female 14-16 GA	
24	4460424	1	Connector - 2 Position	
24	4460268	2	Socket, Female	
36	4460843	1	Connector - 2 Position	
36	4460842	2	Socket, Female	
38	4460930	1	Connector - 8 Position	
38	4460944	5	Socket, Female (Gold)	
38	4460466	3	Plug, Socket	
38	0840062	1	Boot, Deutsch	
41	4460931	1	Connector - 8 Position (Gray)	
41	4460943	5	Pin, Male (Gold)	
41	4460466	3	Plug, Socket	
42	4460933	1	Connector - 12 Position (Gray)	
42	4460465	7	Socket, Female	
42	4460942	5	Socket, Female 14-16 GA	
43	4460891	1	Connector - 2 Position	
43	4460465	2	Socket, Female	
45	4461004	3	Connector - 4 Position (Black)	
45	4461005	12	Terminal	
45	4461006	12	Seal	
46	4461007	3	Connector - 4 Position (Gray)	
46	4461008	12	Plug, Hole	
49	4460536	2	Connector - 3 Position	
49	4460943	6	Pin, Male (Gold)	
50	4460536	1	Connector - 3 Position	
50	4460943	3	Pin, Male (Gold)	
50	1060698	AR	Cable 18/4	
51	4460539	AR	Connector - 3 Position	
51	4460944	6	Socket, Female (Gold)	
52	4460465	3	Socket, Female	
52	4460944	2	Socket, Female (Gold)	
52	4460871	29	Socket, Female	
52	4460464	1	Pin, Male	
52	4460942	3	Socket, Female	
52	4460419	2	Socket, Female	
53	4460891	1	Connector - 2 Position	
53	4460942	2	Socket, Female	

FIGURE 8-59. PLATFORM CONSOLE BOX HARNESS - WITH SKYGUARD

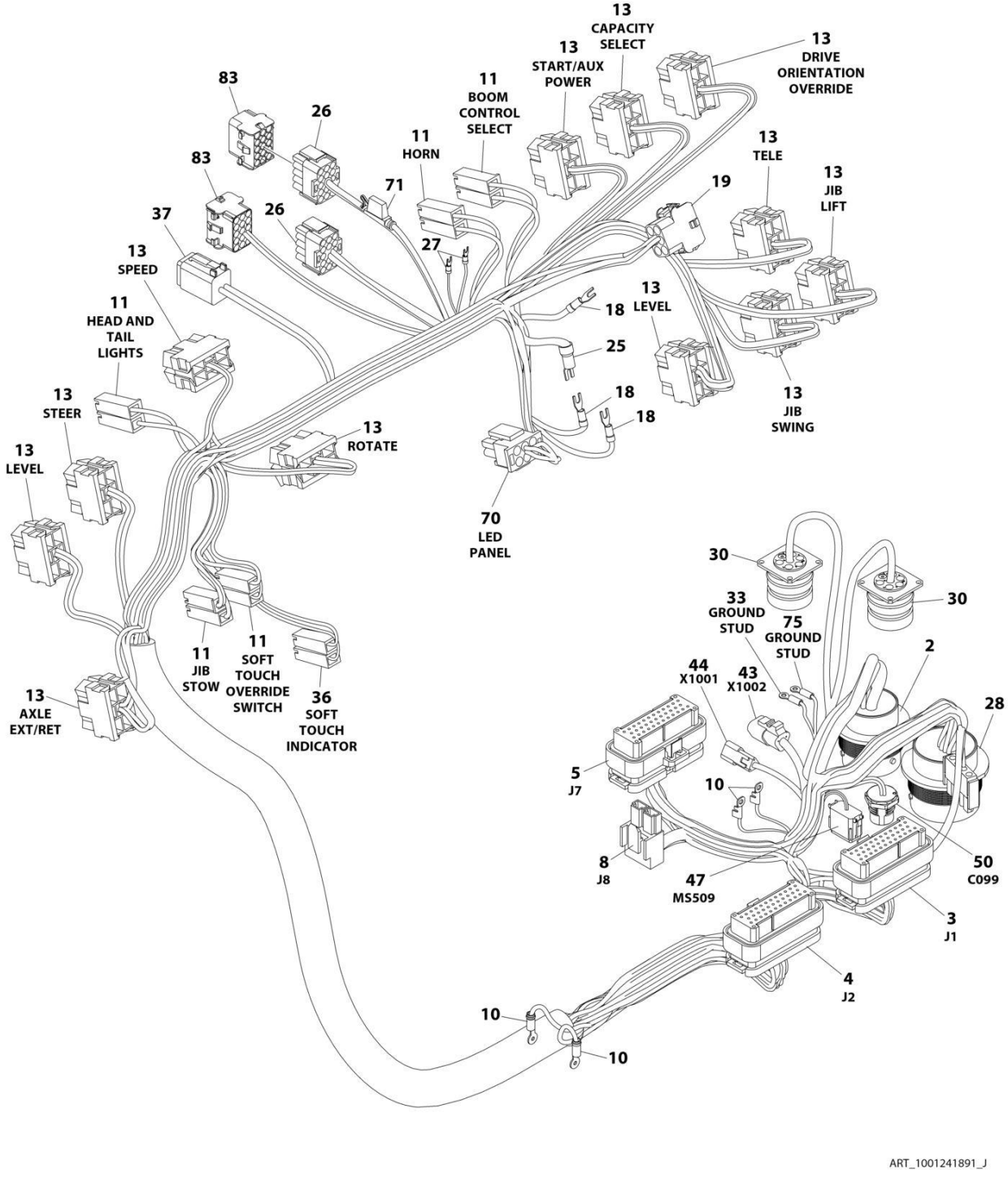

FIGURE 8-59. PLATFORM CONSOLE BOX HARNESS - WITH SKYGUARD

ITEM	PART NUMBER	QTY	DESCRIPTION	REV
	1001241891	Ref	PLATFORM CONSOLE BOX HARNESS	J
2	4460866	1	Connector - 19 Pin	
2	4460464	7	Pin, Male Deutsch 16 Ga	
2	4460508	4	Pin, Male Deutsch 12 Ga	
2	4460943	3	Pin, Male 16 Ga (Gold)	
2	4460466	5	Plug	
3	4460874	1	Connector - 35 Position (Natural)	
3	4460871	33	Socket, Female	
3	4460905	2	Plug	
4	4460876	1	Connector - 35 Position (Blue)	
4	4460871	20	Socket, Female	
4	4460905	20	Plug	
5	4460873	1	Connector - 35 Position (Black)	
5	4460871	26	Socket, Female	
5	4460905	8	Plug	
8	4460879	1	Connector - 2 Position	
8	4460887	2	Terminal	
10	4460213	4	Terminal Eyelet	
11	4460260	10	Terminal, Housing	
11	4460259	10	Terminal	
13	4460418	12	Connector, Female - 6 Position	
13	4460419	12	Socket, Female	
13	1001159186	22	Terminal	
18	4460888	3	Terminal, Fork	
19	4460225	1	Connector - 6 Position	
19	4460227	5	Terminal (16 Gauge)	
25	4460806	1	Terminal, Fork	
26	4460434	2	Connector - 15 Position	
26	4460227	16	Pin, Male	
26	4460267	1	Pin, Male	
27	4460183	11	Terminal, Fork	
28	4460925	1	Connector - 21 Pin	
28	1001126011	13	Pin, Male Deutsch 16 Ga	
28	4460466	8	Plug	
30	1001121616	2	Connector - 6 Position	
30	1001121615	2	Base, Mounting	
33	4460142	1	Terminal, Eyelet	
36	4460016	2	Terminal (16 - 14AWG)	
36	1001271497	2	Terminal (22 - 18AWG)	
37	4460894	1	Connector - 6 Position	
37	4460465	5	Socket, Female	
37	4460466	1	Plug	
43	4460539	1	Plug, Male - 3 Position	
43	4460944	3	Socket, Female (Gold)	
44	4460536	1	Connector - 3 Position	
44	4460943	3	Pin, Male (Gold)	
47	4460933	1	Connector, Gray - 12 Position	
47	4460944	10	Socket, Female (Gold)	
47	4460466	2	Plug	
47	1001119020	1	Bussbar - 12 Position	

SECTION 8 - ELECTRICAL

ITEM	PART NUMBER	QTY	DESCRIPTION	REV
50	1001213447	1	Connector - 5 Position	
70	1001237667	1	Connector - 6 Position	
70	1001237668	4	Socket, Female (Gold)	
71	2400060	1	Holder, Fuse	
71	8229249	1	Fuse	
75	4460042	1	Terminal, Ring	
83	4460708	2	Plug, Male - 15 Position	
83	4460226	2	Socket, Female	

FIGURE 8-60. SKYGUARD INERFACE HARNESS

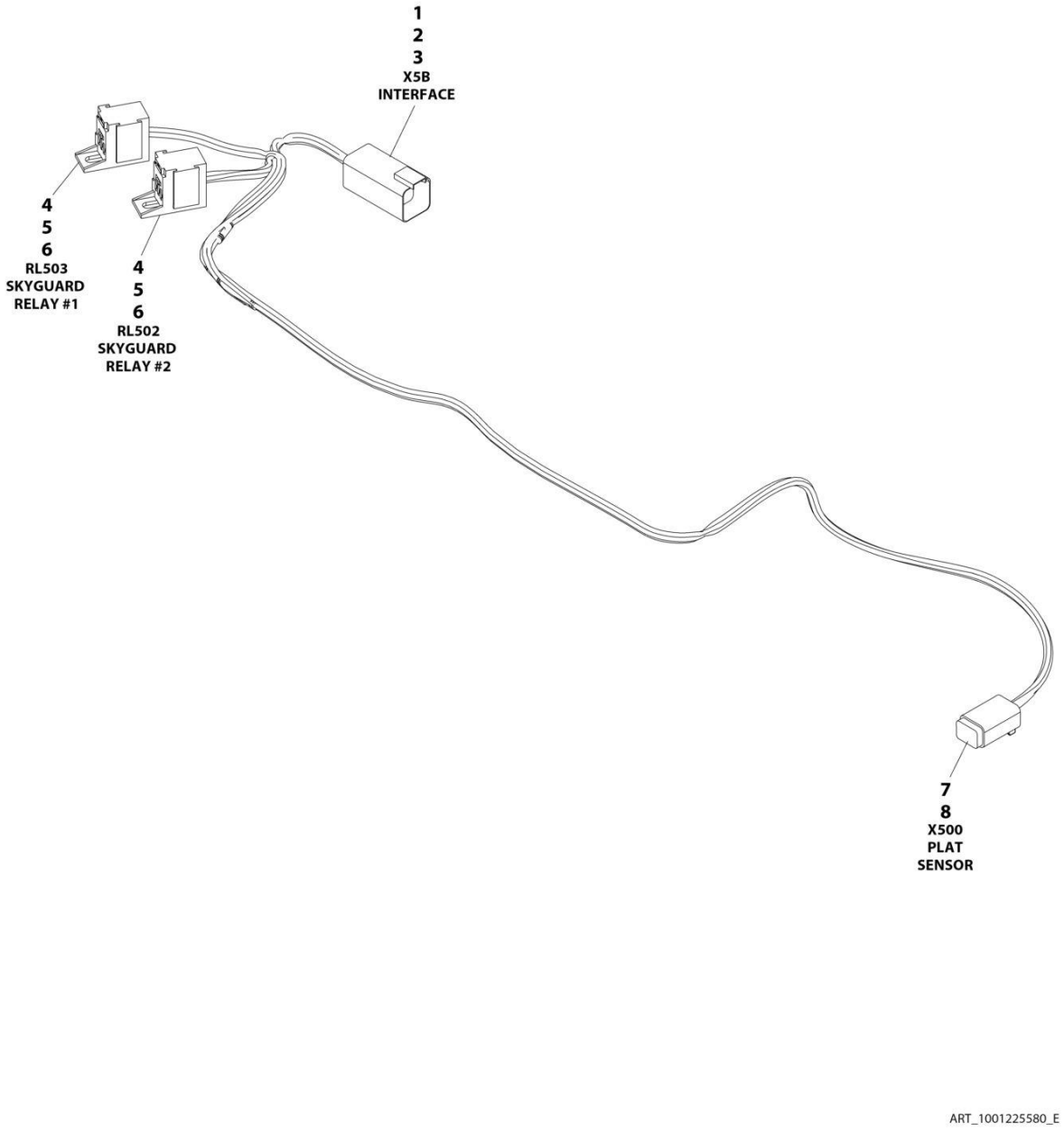

FIGURE 8-60. SKYGUARD INERFACE HARNESS

ITEM	PART NUMBER	QTY	DESCRIPTION	REV
	1001225580	Ref	PLATFORM INTERFACE HARNESS - WITH 1 CELL LSS	E
1	4460899	1	Connector	
2	4460464	4	Terminal	
3	4460466	2	Plug	
4	1001186432	2	Connector	
5	1001253375	4	Terminal	
6	1001104519	4	Terminal	
7	4460884	1	Connector	
8	4460465	4	Terminal	

FIGURE 8-61. PLATFORM VALVE HARNESS

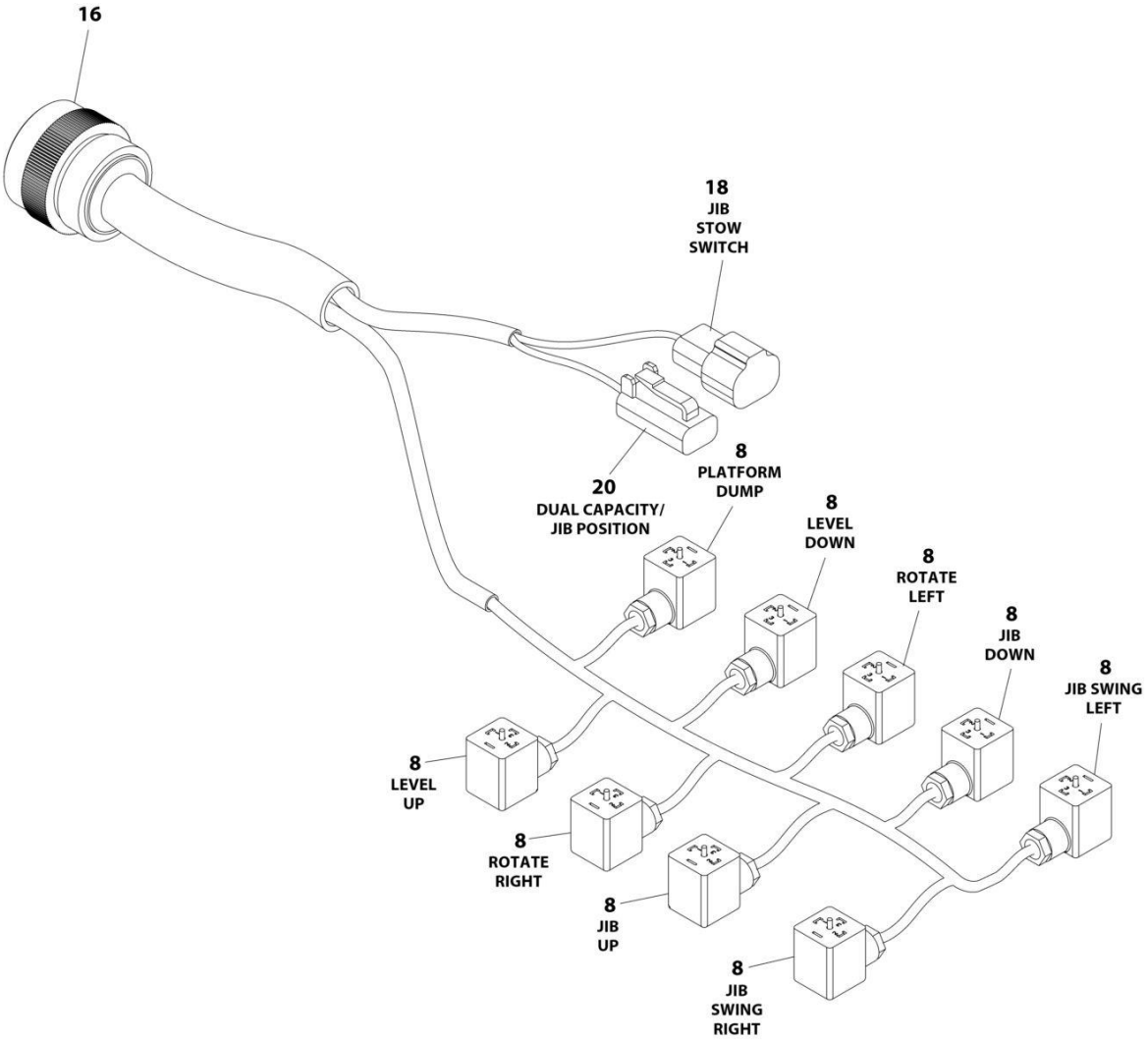

FIGURE 8-61. PLATFORM VALVE HARNESS

ITEM	PART NUMBER	QTY	DESCRIPTION	REV
	4922777	Ref	PLATFORM VALVE HARNESS	E
7	4240033	10	Tie-Strap (Not Shown)	
8	1001263923	9	DIN Connector	
16	4460926	1	Connector - 21 Position	
16	4460928	13	Socket, Female	
16	4460466	8	Plug, Hole	
18	4460897	1	Connector - 2 Position	
18	4460464	2	Pin, Male	
20	4460891	1	Plug, Male - 2 Position	
20	4460465	2	Socket, Female	

FIGURE 8-62. PRESSURE TRANSDUCER HARNESS

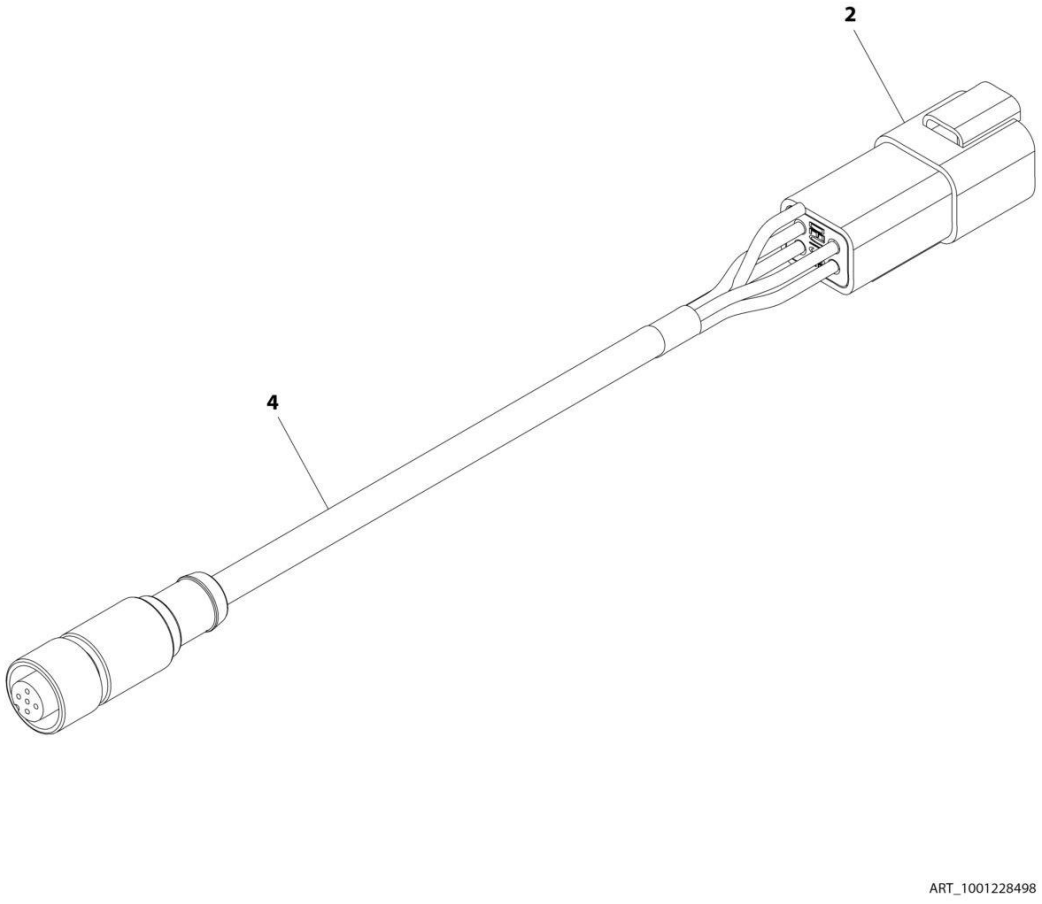

FIGURE 8-62. PRESSURE TRANSDUCER HARNESS

ITEM	PART NUMBER	QTY	DESCRIPTION	REV
	1001228498	Ref	PRESSURE TRANSDUCER HARNESS	A
2	4460932	1	Connector - 3 Position	
2	4460464	4	Pin, Male	
4	1001120634	1	Cable, Shielded M12	

FIGURE 8-63. PRESSURE TRANSDUCER HARNESS

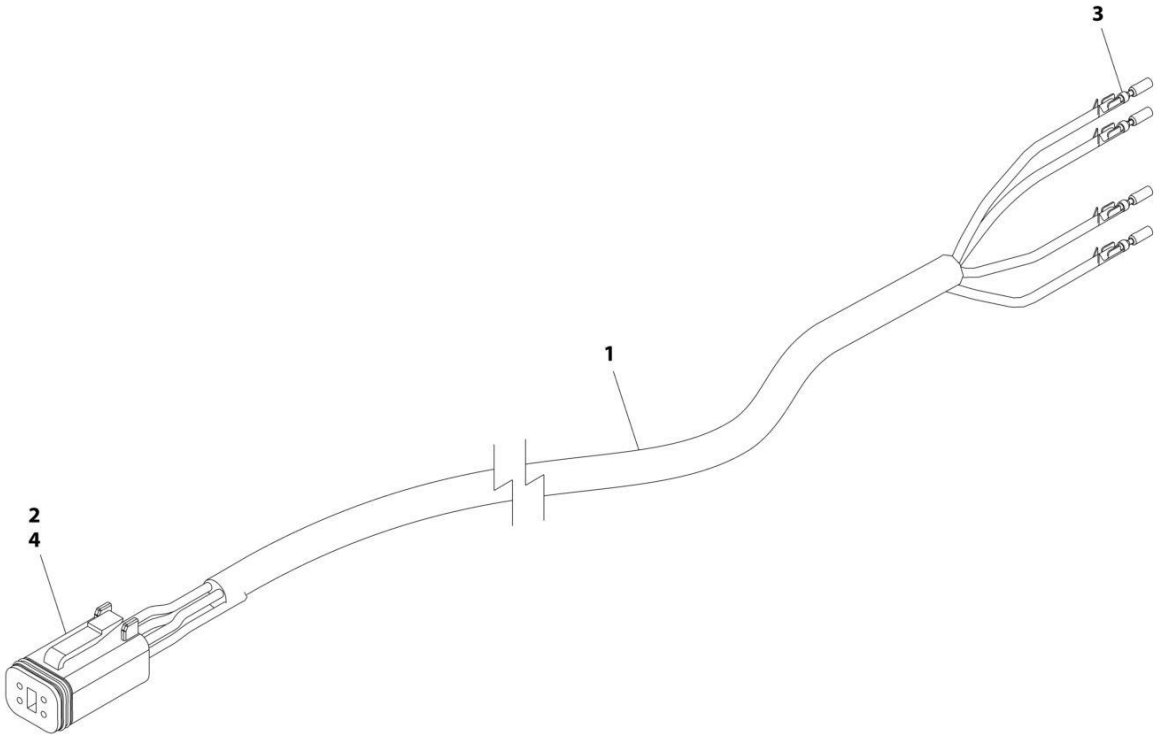

FIGURE 8-63. PRESSURE TRANSDUCER HARNESS

ITEM	PART NUMBER	QTY	DESCRIPTION	REV
	1001228497	Ref	PRESSURE TRANSDUCER HARNESS	A
1	1060981	11 ft/ 3.35m	Cable, Electrical 18/3	
2	4460465	4	Socket, Female	
3	4460871	4	Socket, Female	
4	4460884	1	Connector - 4 Position	

FIGURE 8-64. PUMP ADAPTER HARNESS - SAUER PUMPS

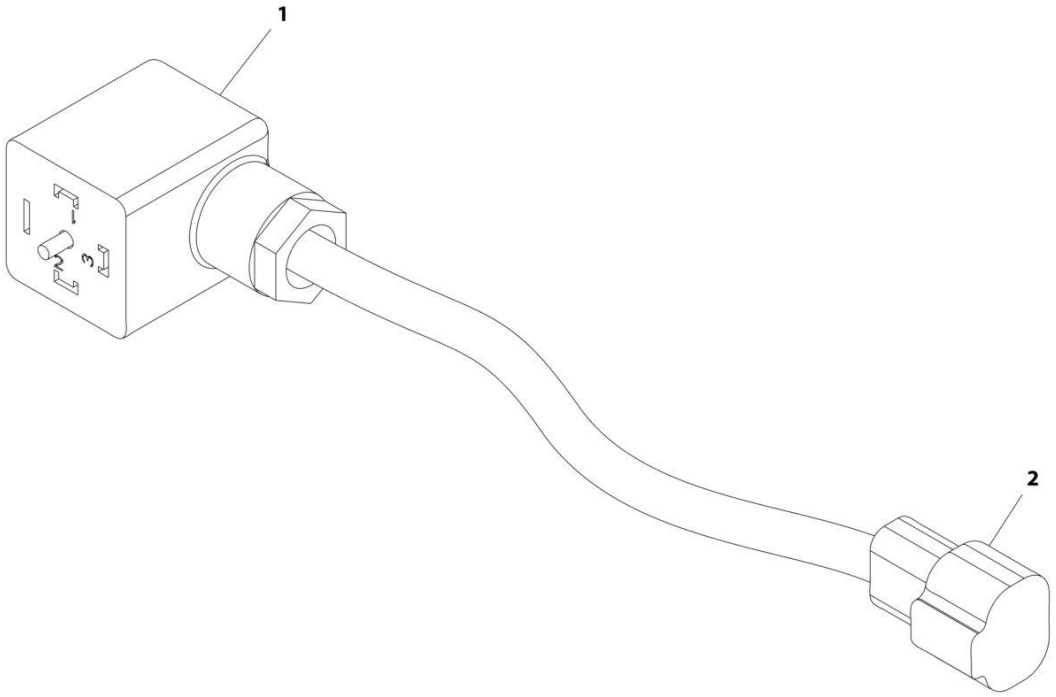

FIGURE 8-64. PUMP ADAPTER HARNESS - SAUER PUMPS

ITEM	PART NUMBER	QTY	DESCRIPTION	REV
	1001119456	Ref	PUMP ADAPTER HARNESS - SAUER PUMPS	C
1	4460880	2	DIN Connector	
2	4460897	2	Connector - 2 Position	
2	4460464	4	Pin, Male	

FIGURE 8-65. RECEPTACLE BOX KIT - 110V IEC YELLOW WITHOUT 2500W GENERATOR (CE & UK CA SPECS)

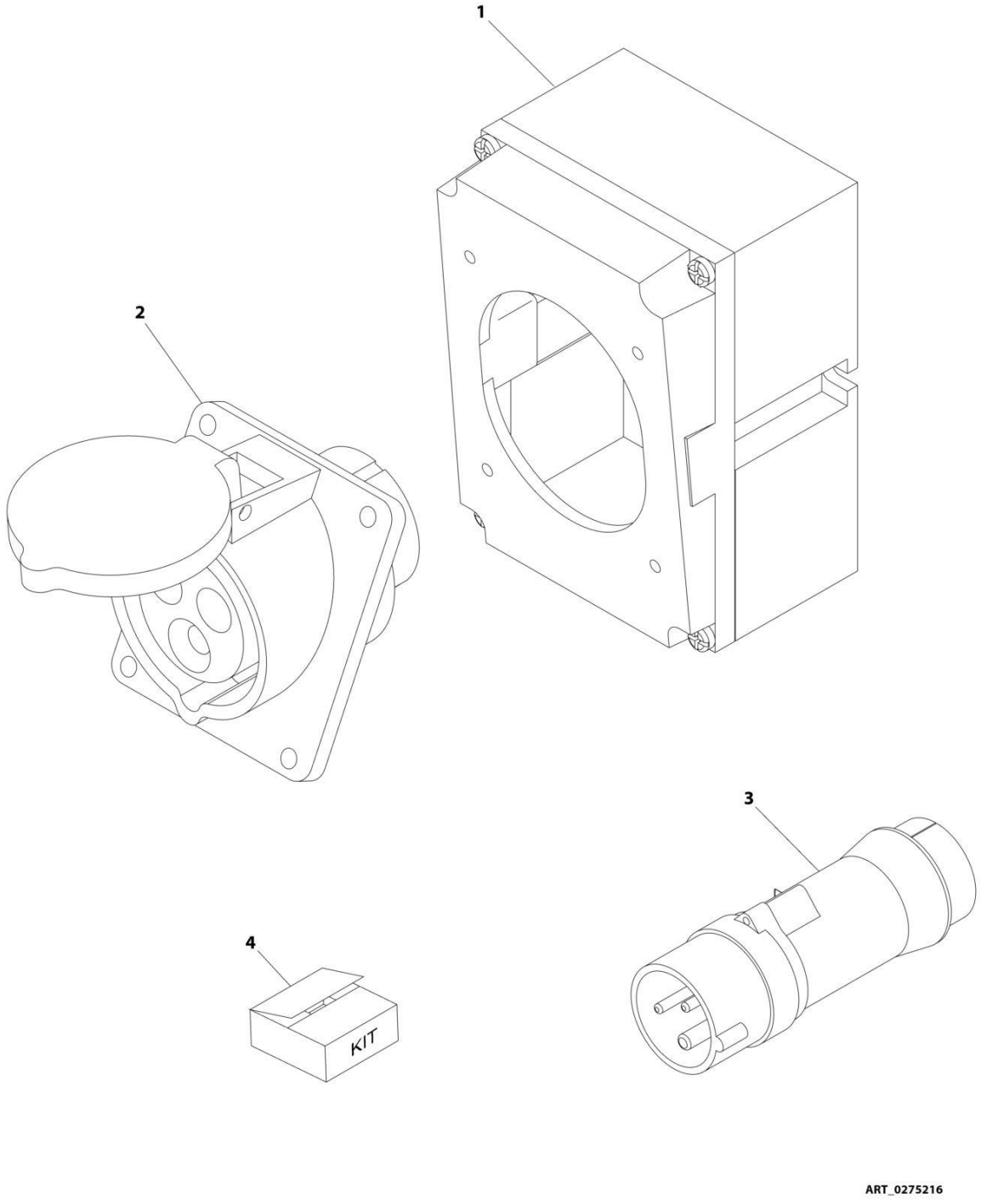

FIGURE 8-65. RECEPTACLE BOX KIT - 110V IEC YELLOW WITHOUT 2500W GENERATOR (CE & UK CA SPECS)

ITEM	PART NUMBER	QTY	DESCRIPTION	REV
	0275216	Ref	RECEPTACLE BOX KIT - 110V IEC YELLOW	B
1	0861781	1	Box, Switch	
2	4461198	1	Receptacle	
3	4461196	1	Plug, Male	
4	1001100341	1	Plug and Socket Kit (Includes Items 1-3 and Female Plug p/n 4461197)	

FIGURE 8-66. RECEPTACLE BOX KIT - 110V IEC YELLOW WITH 2500W GENERATOR (CE & UK CA SPECS)

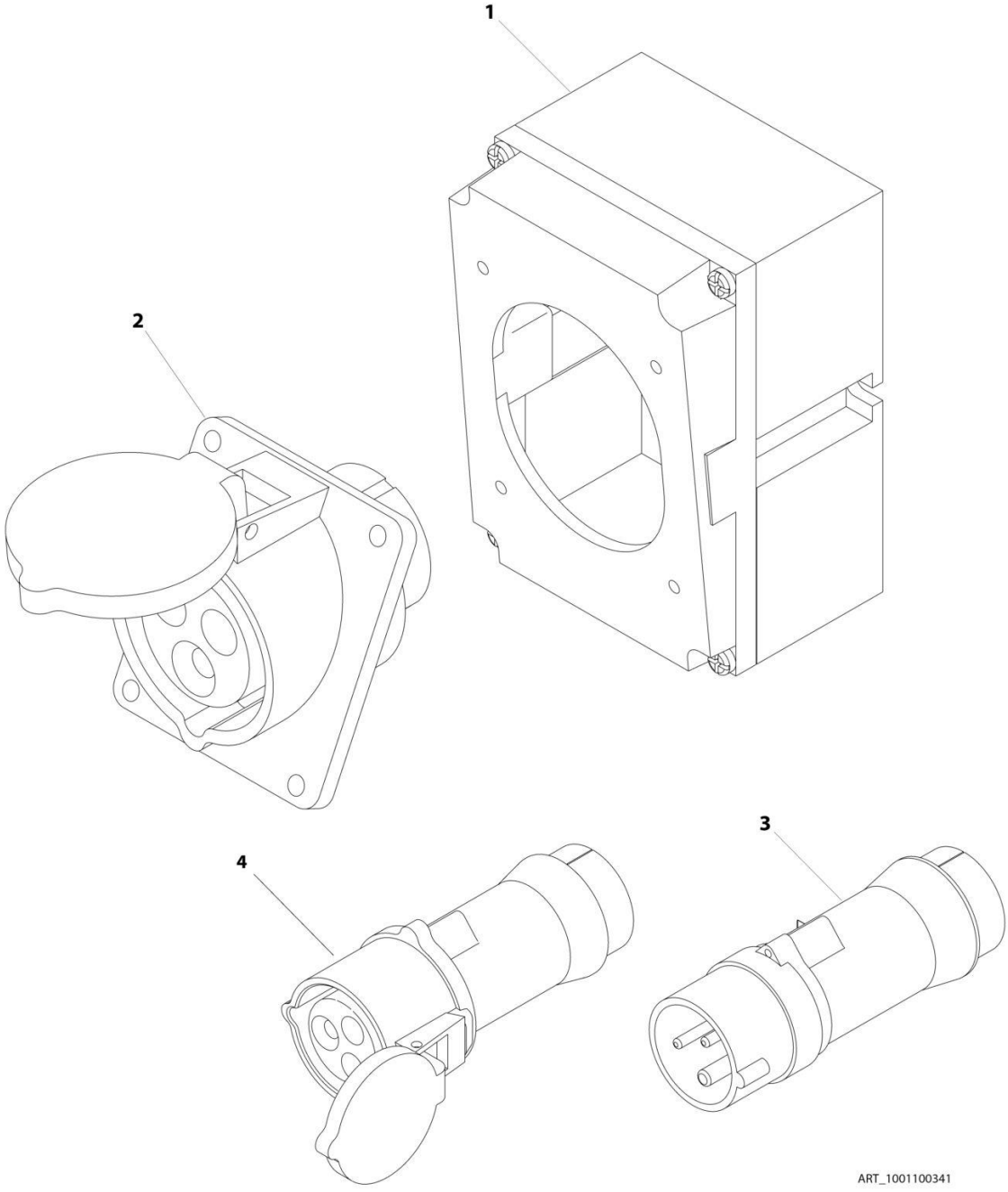

FIGURE 8-66. RECEPTACLE BOX KIT - 110V IEC YELLOW WITH 2500W GENERATOR (CE & UK CA SPECS)

ITEM	PART NUMBER	QTY	DESCRIPTION	REV
	1001100341	Ref	RECEPTACLE BOX KIT - 110V IEC YELLOW	2
1	0861781	1	Box, Switch	
2	4461198	1	Receptacle	
3	4461196	1	Plug, Male	
4	4461197	1	Plug, Female	

FIGURE 8-67. RECEPTACLE BOX KIT - 220V IEC BLUE WITHOUT 2500W GENERATOR (CE & UK CA SPECS)

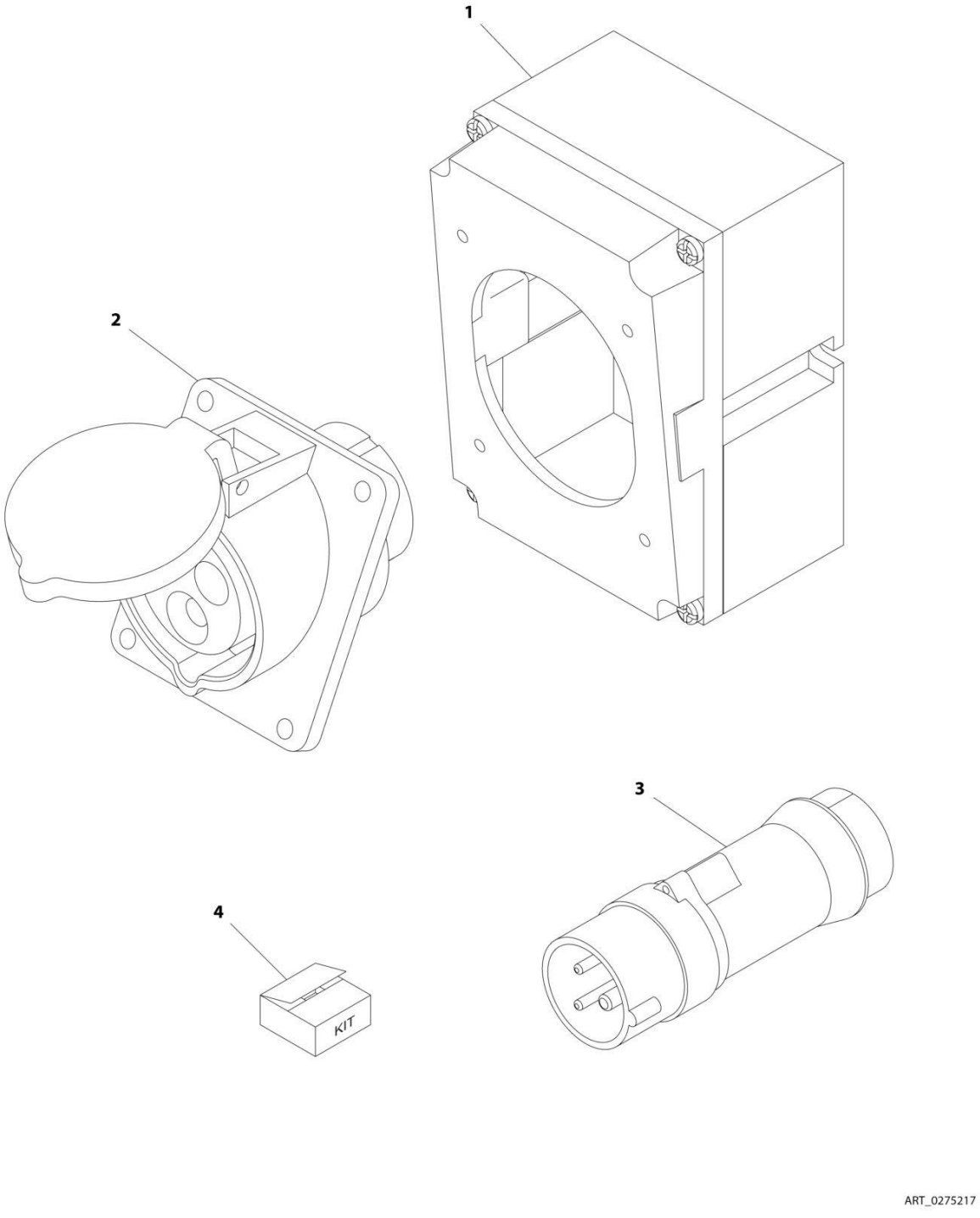

FIGURE 8-67. RECEPTACLE BOX KIT - 220V IEC BLUE WITHOUT 2500W GENERATOR (CE & UK CA SPECS)

ITEM	PART NUMBER	QTY	DESCRIPTION	REV
	0275217	Ref	RECEPTACLE BOX KIT - 220V IEC BLUE	B
1	0861781	1	Box, Switch	
2	4461201	1	Receptacle	
3	4461199	1	Plug, Male	
4	1001100342	1	Plug and Socket Kit (Includes Items 1-3 and Female Plug p/n 4461200)	

FIGURE 8-68. RECEPTACLE BOX KIT - 220V IEC BLUE WITH 2500W GENERATOR (CE & UK CA SPECS)

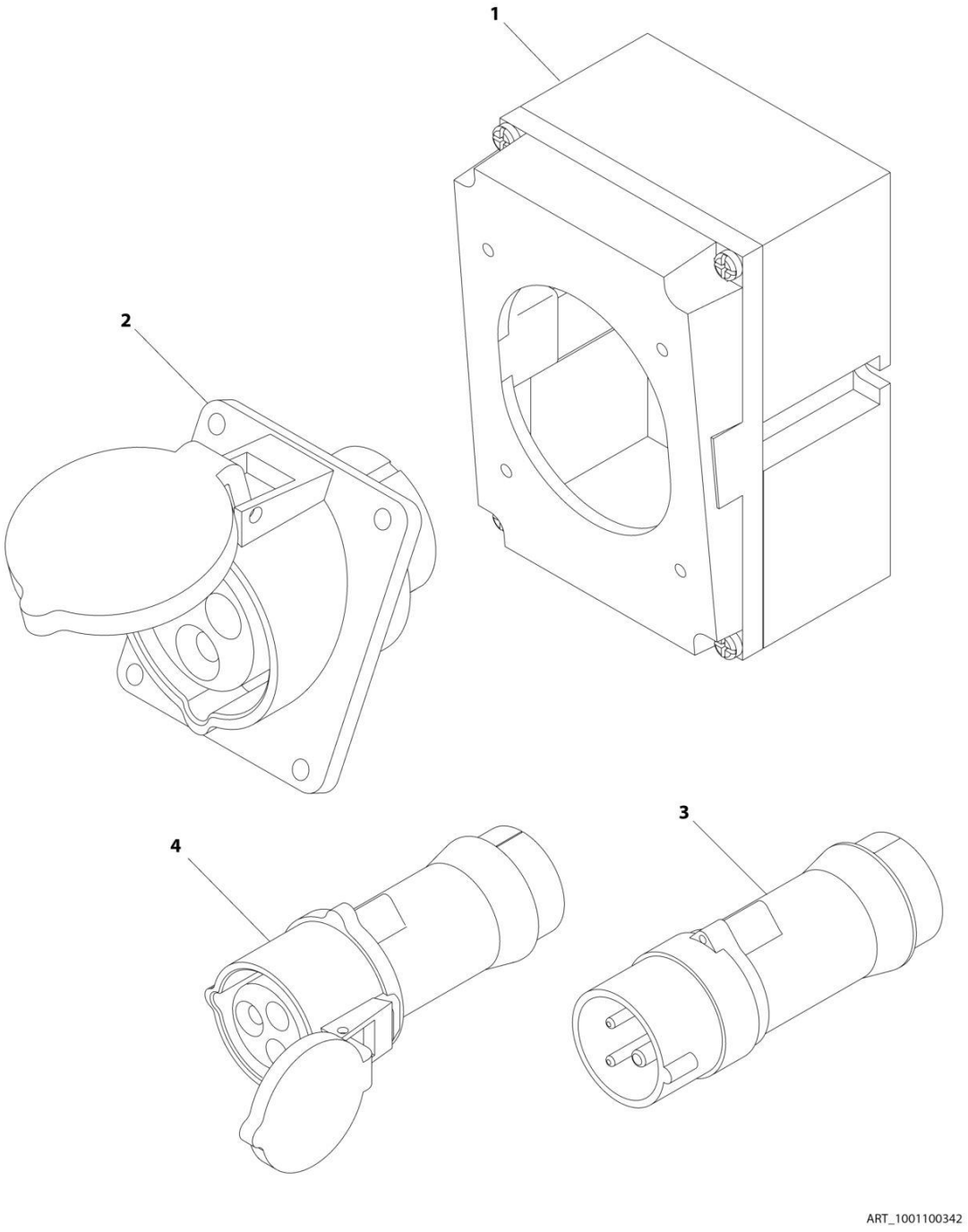

FIGURE 8-68. RECEPTACLE BOX KIT - 220V IEC BLUE WITH 2500W GENERATOR (CE & UK CA SPECS)

ITEM	PART NUMBER	QTY	DESCRIPTION	REV
	1001100342	Ref	RECEPTACLE BOX KIT - 220V IEC BLUE WITH 2500W GENERATOR (CE & UK CA SPECS)	2
1	0861781	1	Box, Switch	
2	4461201	1	Receptacle	
3	4461199	1	Plug, Male	
4	4461200	1	Plug, Female	

FIGURE 8-69. RECEPTACLE BOX KIT - 220V CEE7 POST GROUND WITHOUT 2500W GENERSTOR (2X4 BOX) (CE & UK CA SPECS)

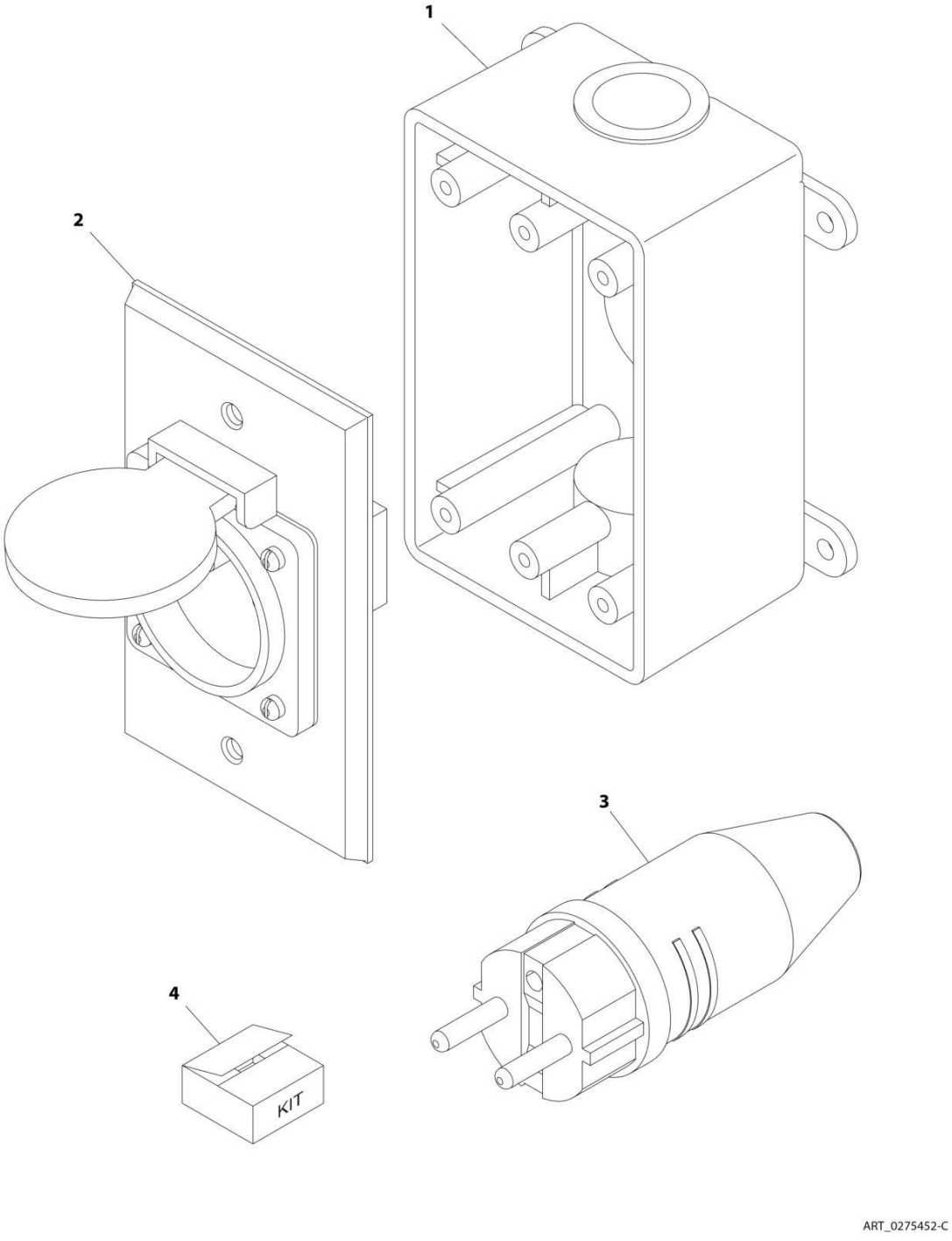

FIGURE 8-69. RECEPTACLE BOX KIT - 220V CEE7 POST GROUND WITHOUT 2500W GENERSTOR (2X4 BOX) (CE & UK CA SPECS)

ITEM	PART NUMBER	QTY	DESCRIPTION	REV
	0275452	Ref	RECEPTACLE BOX KIT - 220V CEE7 POST GROUND 2IN X 4IN BOX	C
1	0861731	1	Box, Switch	
2	4461244	1	Receptacle	
3	4461205	1	Plug, Male	
4	1001100345	1	Plug and Socket Kit (Includes Items 1-3 and Female Plug p/n 4461203)	

FIGURE 8-70. RECEPTACLE BOX KIT - 220V CEE7 POST GROUND WITH 2500W GENERSTOR (2X4 BOX) (CE & UK CA SPECS)

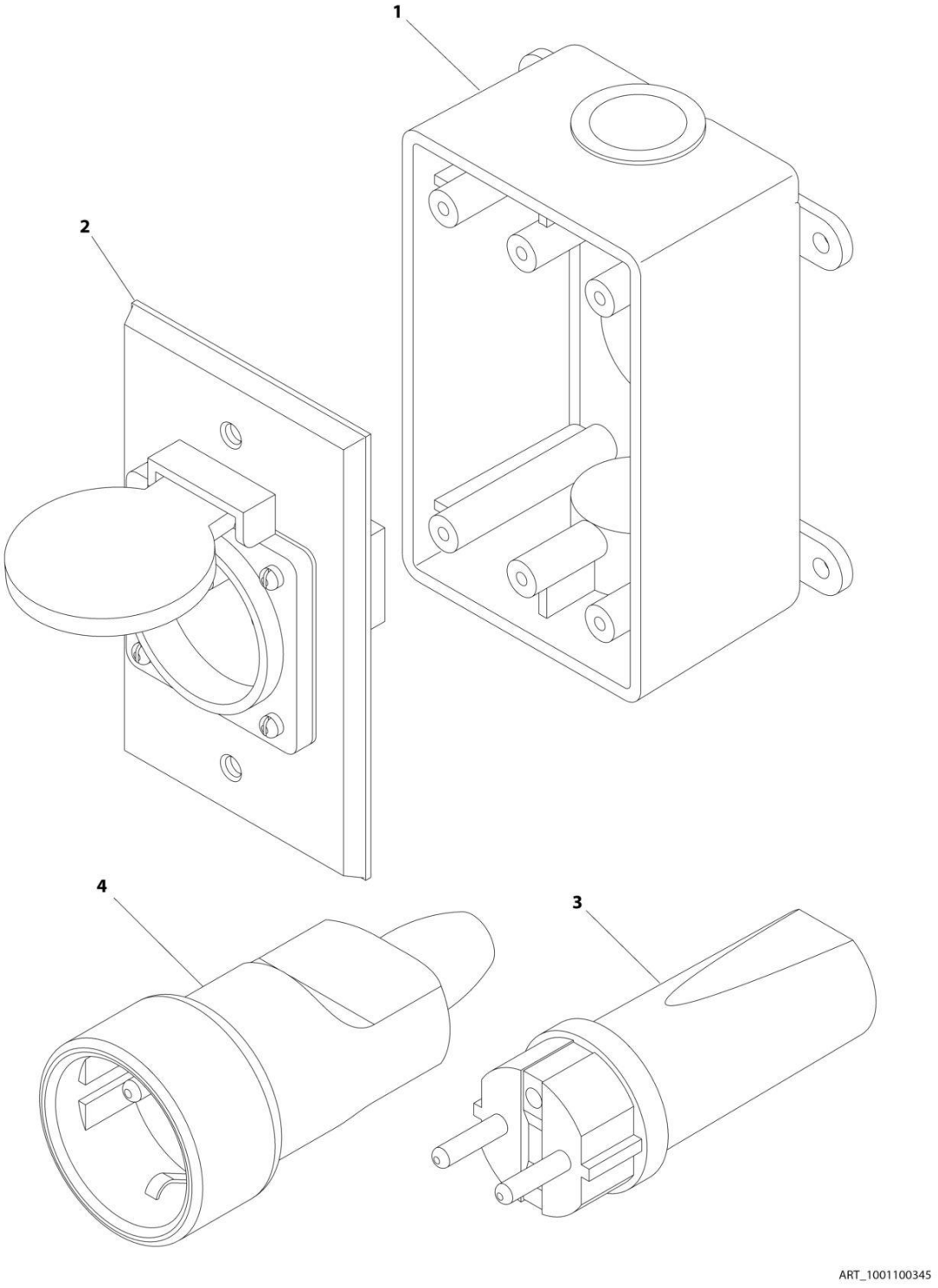

FIGURE 8-70. RECEPTACLE BOX KIT - 220V CEE7 POST GROUND WITH 2500W GENERSTOR (2X4 BOX) (CE & UK CA SPECS)

ITEM	PART NUMBER	QTY	DESCRIPTION	REV
	1001100345	Ref	RECEPTACLE BOX KIT - 220V CEE7 POST GROUND	C
1	0861731	1	Box, Switch	
2	4461244	1	Receptacle	
3	4461205	1	Plug, Male	
4	4461203	1	Plug, Female	

FIGURE 8-71. RECEPTACLE BOX KIT - 220V CEE7 SIDE GROUND WITHOUT 2500W GENERATOR (2X4 BOX) (CE & UK CA SPECS)

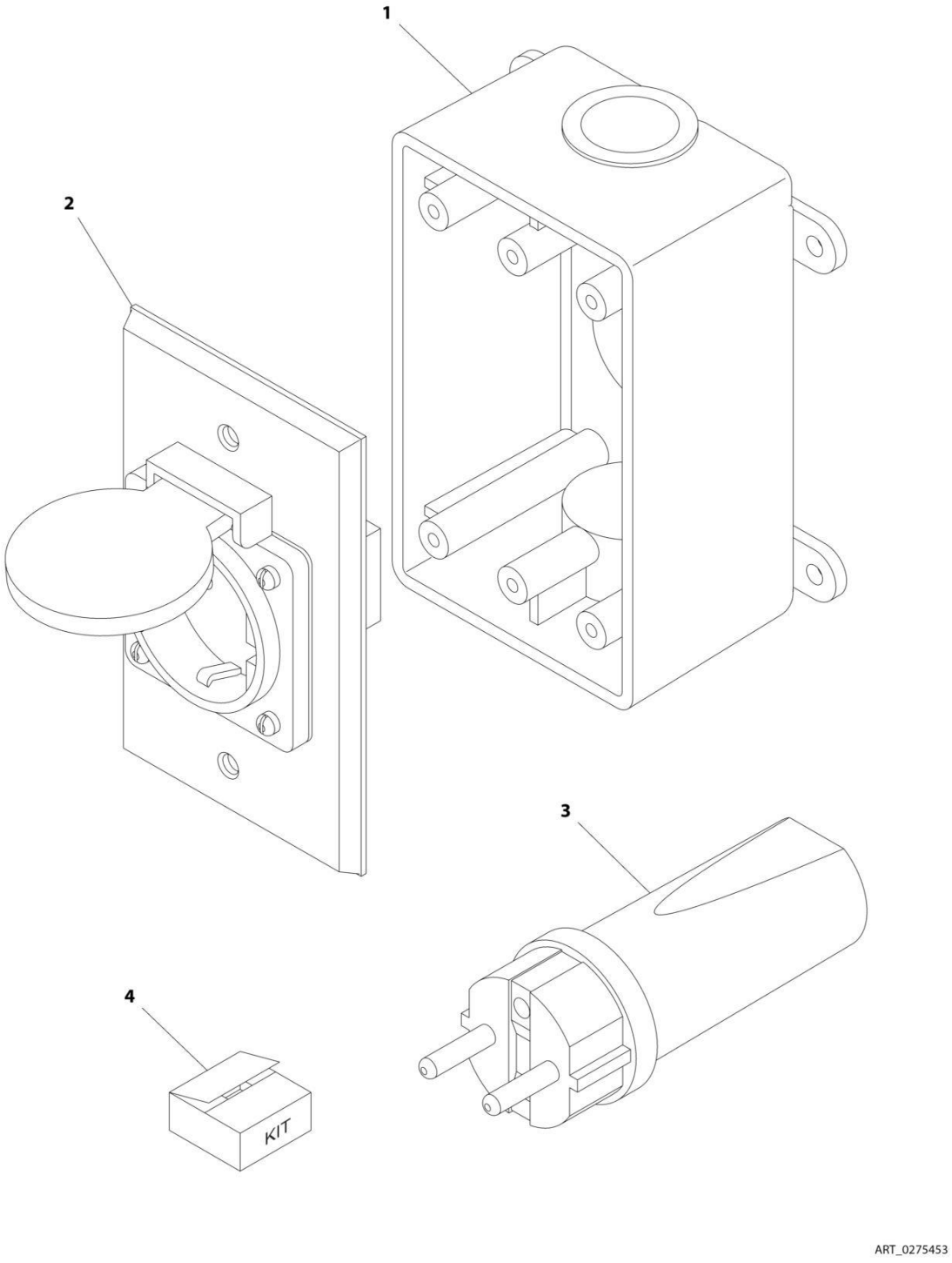

FIGURE 8-71. RECEPTACLE BOX KIT - 220V CEE7 SIDE GROUND WITHOUT 2500W GENERATOR (2X4 BOX) (CE & UK CA SPECS)

ITEM	PART NUMBER	QTY	DESCRIPTION	REV
	0275453	Ref	RECEPTACLE BOX KIT - 220V CEE7 SIDE GROUND	B
1	0861731	1	Box, Switch	
2	4461245	1	Receptacle	
3	4461205	1	Plug, Male	
4	1001100347	1	Plug and Socket Kit (Includes Items 1-3 and Female Plug p/n 4461206)	

FIGURE 8-72. RECEPTACLE BOX KIT - 220V CEE7 SIDE GROUND WITH 2500W GENERATOR (2X4 BOX) (CE & UK CA SPECS)

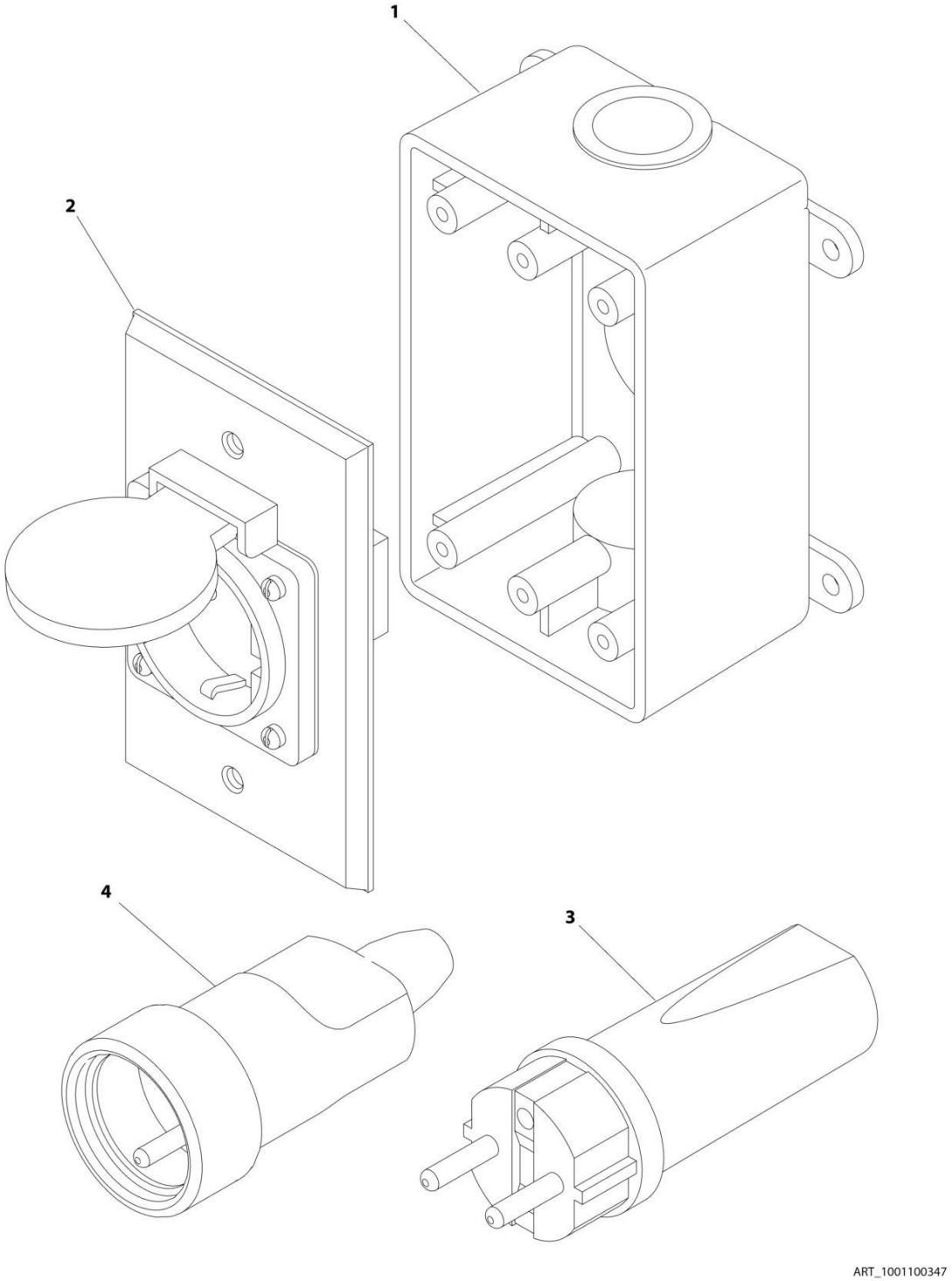

FIGURE 8-72. RECEPTACLE BOX KIT - 220V CEE7 SIDE GROUND WITH 2500W GENERATOR (2X4 BOX) (CE & UK CA SPECS)

ITEM	PART NUMBER	QTY	DESCRIPTION	REV
	1001100347	Ref	RECEPTACLE BOX KIT - 220V CEE7 SIDE GROUND	3
1	0861731	1	Box, Switch	
2	4461245	1	Receptacle	
3	4461205	1	Plug, Male	
4	4461206	1	Plug, Female	

FIGURE 8-73. RECEPTACLE BOX KIT - 220V AFSINT 107 KEYED GROUND WITHOUT 2500W GENERATOR (2X4 BOX) (CE & UK CA SPECS)

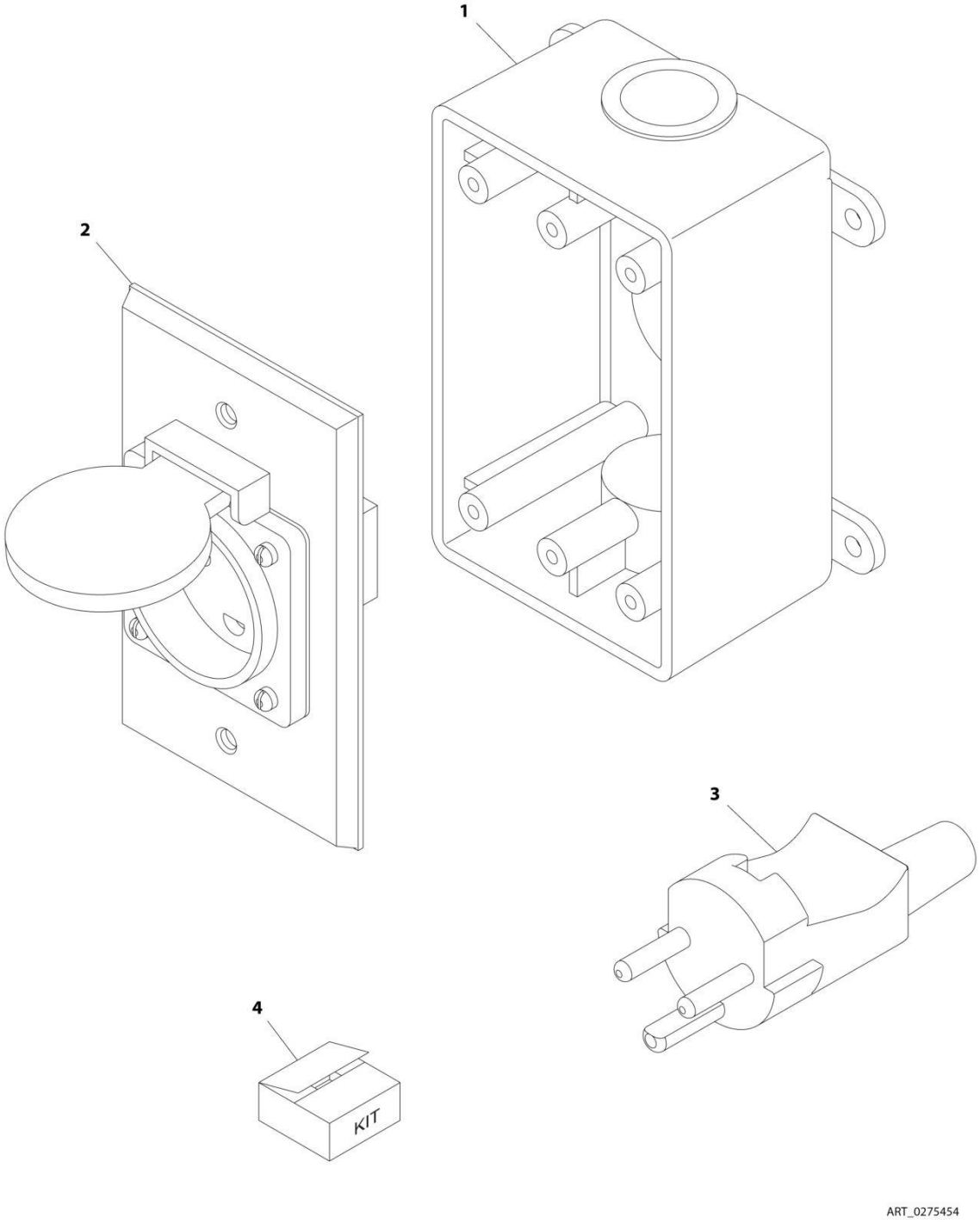

FIGURE 8-73. RECEPTACLE BOX KIT - 220V AFSINT 107 KEYED GROUND WITHOUT 2500W GENERATOR (2X4 BOX) (CE & UK CA SPECS)

ITEM	PART NUMBER	QTY	DESCRIPTION	REV
	0275454	Ref	RECEPTACLE BOX KIT - 220V AFSINT 107	B
1	0861731	1	Box, Switch	
2	4461246	1	Receptacle	
3	4461249	1	Plug, Male	
4	1001100346	1	Plug and Socket Kit (Includes Items 1-3 and Female Plug p/n 4461250)	

FIGURE 8-74. RECEPTACLE BOX KIT - 220V AFSINT 107 KEYED GROUND WITH 2500W GENERATOR (2X4 BOX) (CE & UK CA SPECS)

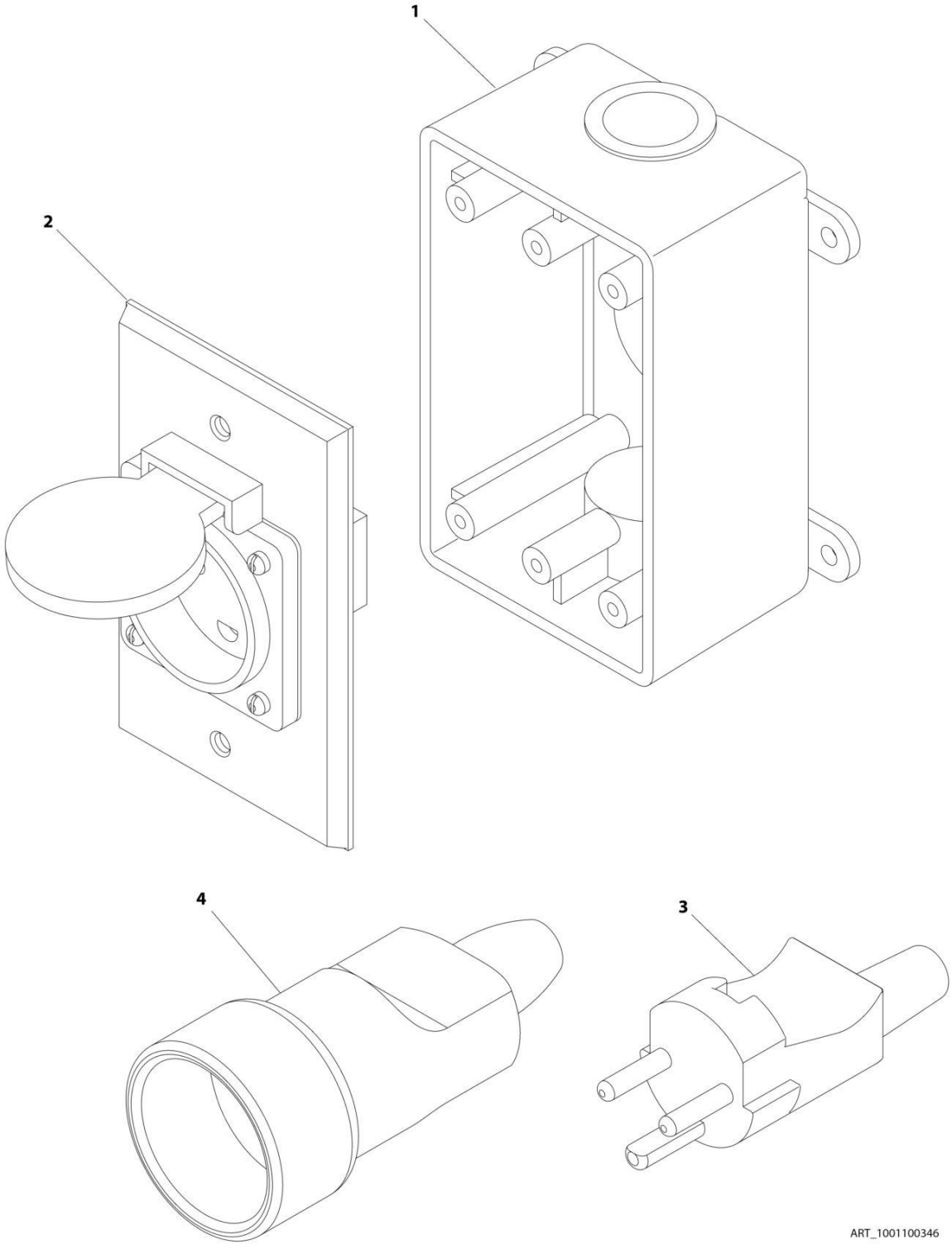

FIGURE 8-74. RECEPTACLE BOX KIT - 220V AFSINT 107 KEYED GROUND WITH 2500W GENERATOR (2X4 BOX) (CE & UK CA SPECS)

ITEM	PART NUMBER	QTY	DESCRIPTION	REV
	1001100346	Ref	RECEPTACLE BOX KIT - 220V AFSINT 107 KEYED GROUND WITH 2500W GENERATOR (2X4 BOX) (CE & UK CA SPECS)	2
1	0861731	1	Box, Switch	
2	4461246	1	Receptacle	
3	4461249	1	Plug, Male	
4	4461250	1	Plug, Female	

FIGURE 8-75. RELAY HARNESS

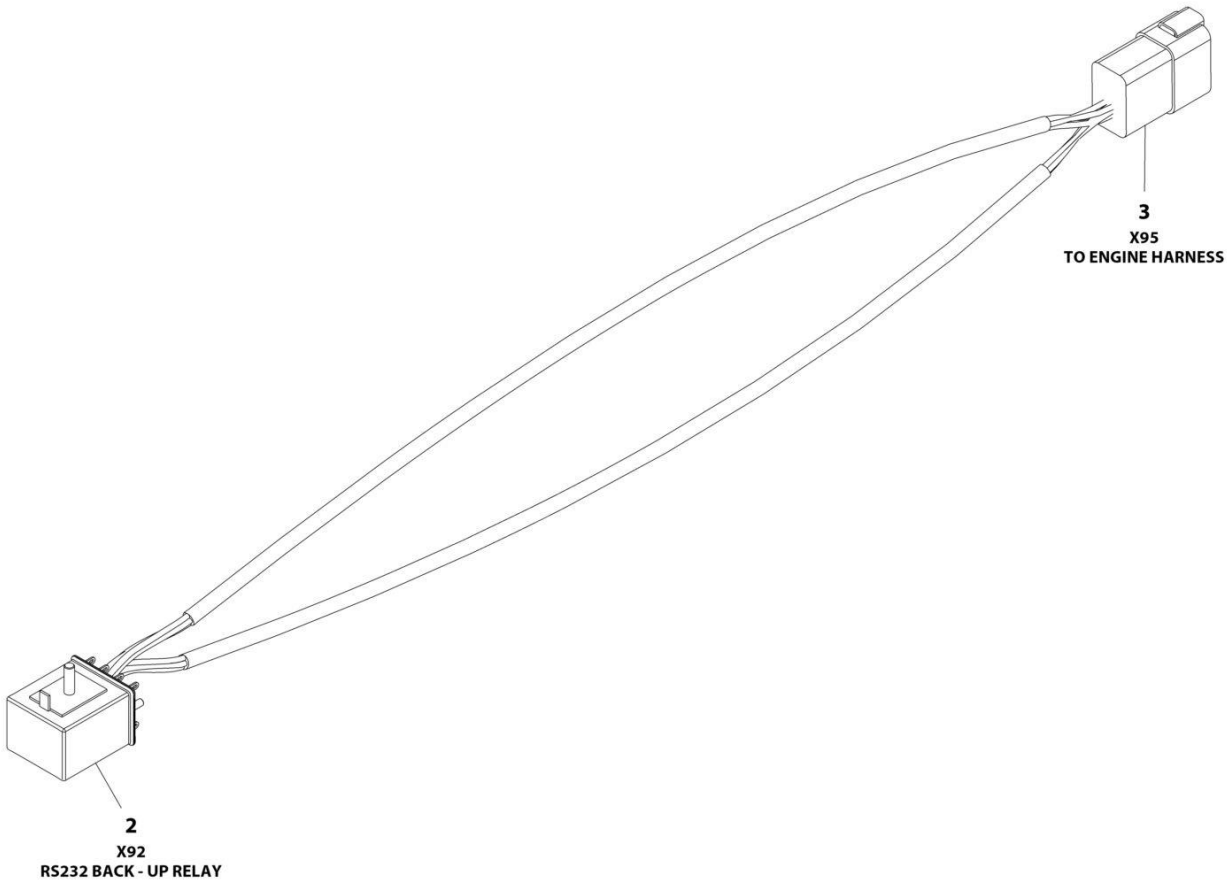

FIGURE 8-75. RELAY HARNESS

ITEM	PART NUMBER	QTY	DESCRIPTION	REV
	4923036	Ref	RELAY HARNESS	E
2	3740143	1	Relay	
3	4460931	1	Connector - 8 Position	
3	4460943	8	Pin, Male	

FIGURE 8-76. STROBE LIGHT HARNESS (AMBER)

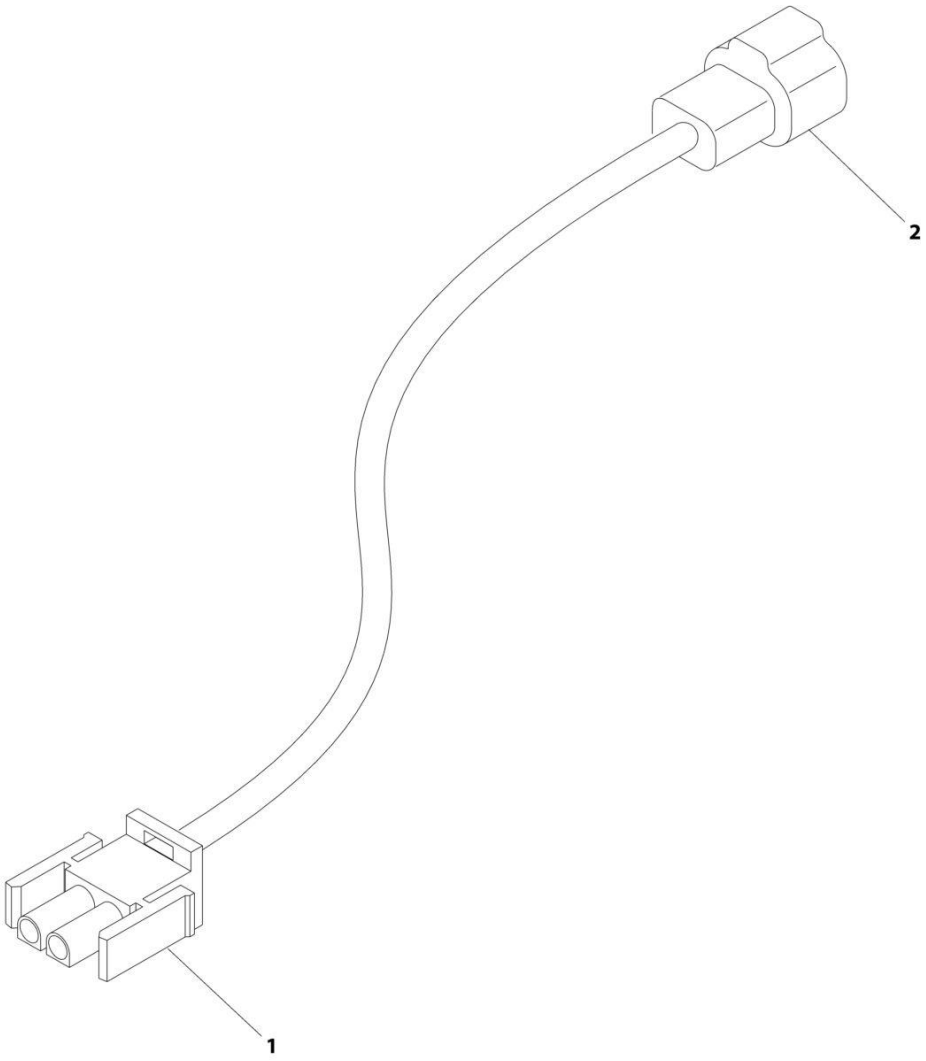

FIGURE 8-76. STROBE LIGHT HARNESS (AMBER)

ITEM	PART NUMBER	QTY	DESCRIPTION	REV
	1001149818	Ref	STROBE LIGHT HARNESS (AMBER)	D
1	4460320	1	Plug, Male - 2 Position	
1	4460267	2	Pin, Male	
2	4460897	1	Connector - 2 Position	
2	4460464	2	Pin, Male	

FIGURE 8-77. TILT SENSOR HARNESS (LEFT)

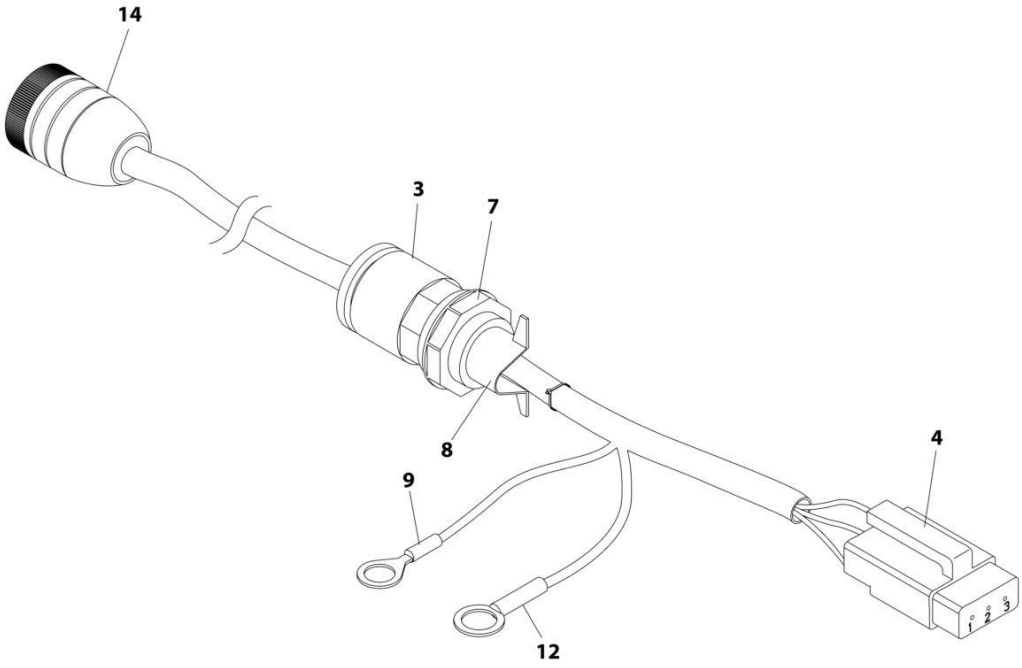

FIGURE 8-77. TILT SENSOR HARNESS (LEFT)

ITEM	PART NUMBER	QTY	DESCRIPTION	REV
	4922948	Ref	TILT SENSOR HARNESS (LEFT)	E
3	1560011	1	Connector, Conduit	
4	4460911	1	Connector - 3 Position	
4	4460912	1	Lock, Wedge	
4	4460918	3	Pin, Male	
7	1560012	1	Nut, Conduit	
8	1320309	1	Clamp, Cable	
9	4460702	1	Terminal, Eyelet	
10	4240032	2	Tie-Strap (Not Shown)	
12	4460256	1	Terminal, Eyelet	
14	4461013	1	Connector - 6 Position	

FIGURE 8-78. TILT SENSOR HARNESS (RIGHT)

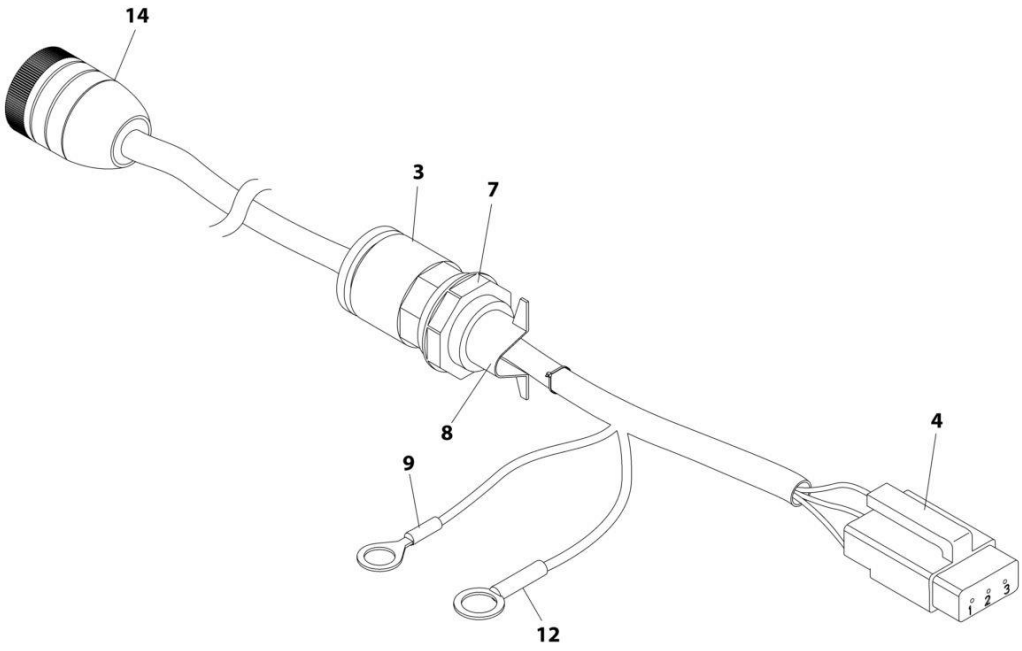

FIGURE 8-78. TILT SENSOR HARNESS (RIGHT)

ITEM	PART NUMBER	QTY	DESCRIPTION	REV
	4922947	Ref	TILT SENSOR HARNESS (RIGHT)	E
3	1560011	1	Connector, Conduit	
4	4460911	1	Connector - 3 Position	
4	4460912	1	Lock, Wedge	
4	4460918	3	Pin, Male	
7	1560012	1	Nut, Conduit	
8	1320309	1	Clamp, Cable	
9	4460702	1	Terminal, Eyelet	
10	4240032	2	Tie-Strap (Not Shown)	
12	4460256	1	Terminal, Eyelet	
14	4461013	1	Connector - 6 Position	

FIGURE 8-79. TOWER BOOM ANGLE SENSOR HARNESS (LEFT)

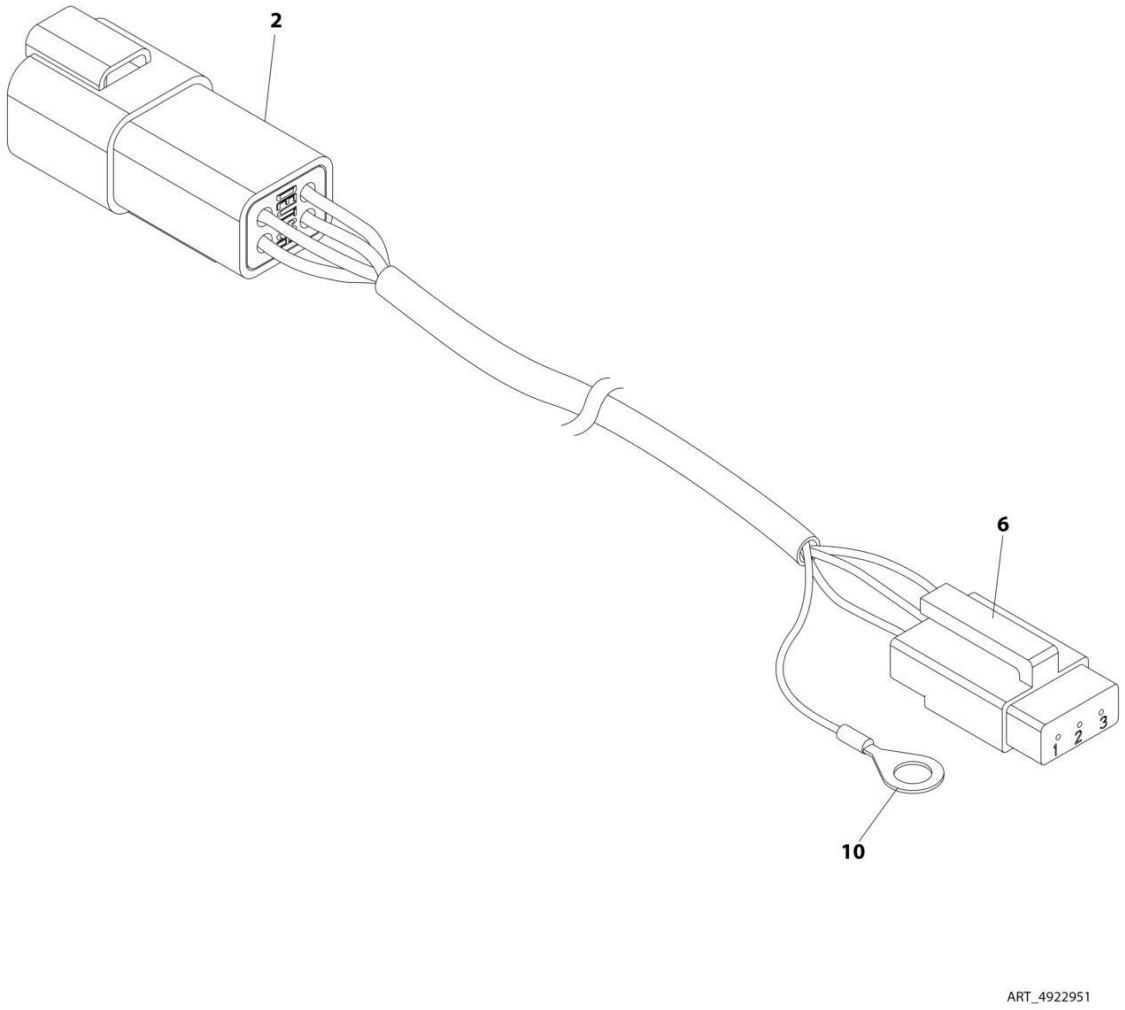

FIGURE 8-79. TOWER BOOM ANGLE SENSOR HARNESS (LEFT)

ITEM	PART NUMBER	QTY	DESCRIPTION	REV
	4922951	Ref	TOWER BOOM ANGLE SENSOR HARNESS (LEFT)	E
2	4460932	1	Connector - 4 Position	
2	4460943	4	Pin, Male (Gold)	
6	4460911	1	Connector - 3 Position	
6	4460918	3	Socket, Female	
6	4460912	1	Lock, Wedge - Position	
10	4460722	1	Terminal, Eyelet	

FIGURE 8-80. TOWER BOOM ANGLE SENSOR HARNESS (RIGHT)

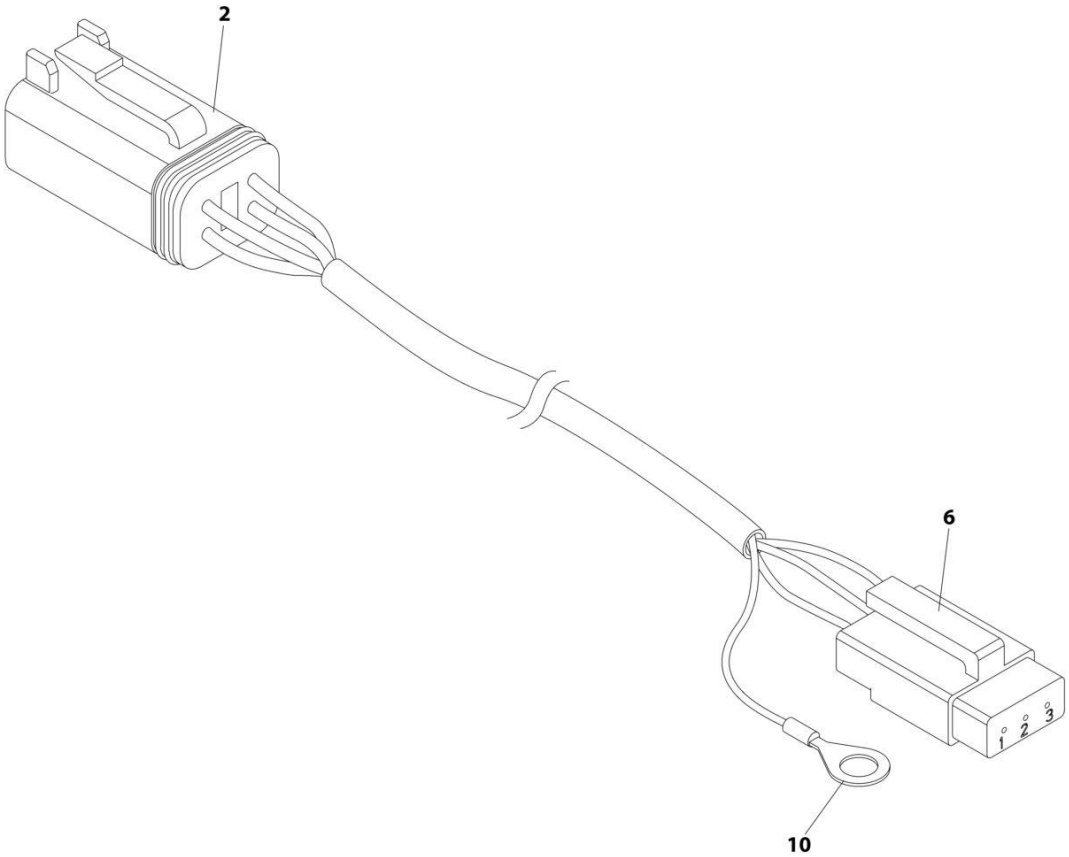

FIGURE 8-80. TOWER BOOM ANGLE SENSOR HARNESS (RIGHT)

ITEM	PART NUMBER	QTY	DESCRIPTION	REV
	4922950	Ref	TOWER BOOM ANGLE SENSOR HARNESS (RIGHT)	D
2	4460884	1	Connector - 4 Position	
2	4460944	4	Socket, Female (Gold)	
6	4460911	1	Connector - 3 Position	
6	4460918	3	Socket, Female	
6	4460912	1	Lock, Wedge - Position	
10	4460722	1	Terminal, Eyelet	

FIGURE 8-81. TOWER BOOM CONTROL CABLE HARNESS

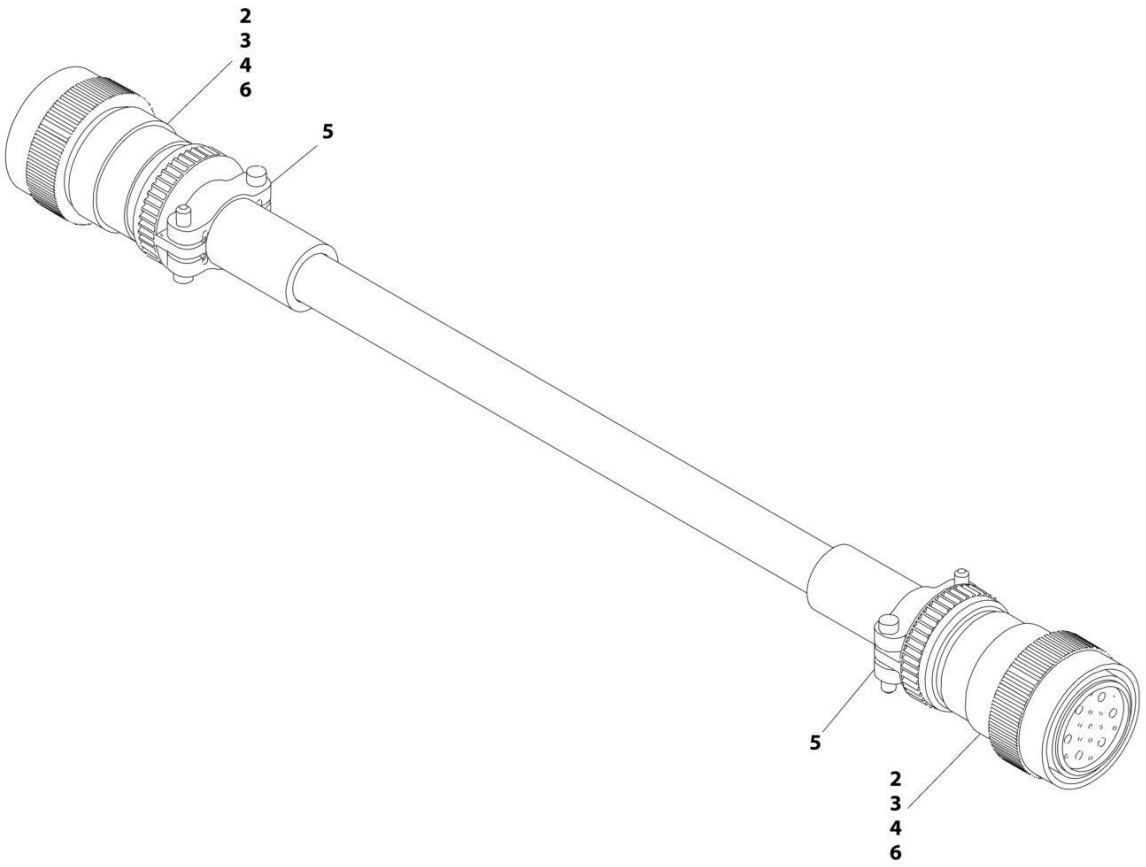

FIGURE 8-81. TOWER BOOM CONTROL CABLE HARNESS

ITEM	PART NUMBER	QTY	DESCRIPTION	REV
	4922956	Ref	TOWER BOOM CONTROL CABLE HARNESS	E
2	4460465	11	Socket, Female	
3	4460865	2	Connector - 19 Position	
4	4460509	4	Socket, Female	
5	4460473	2	Clamp	
6	4460466	4	Plug, Socket	

FIGURE 8-82. TOWER BOOM FLY TO GROUND CONTROL BOX HARNESS

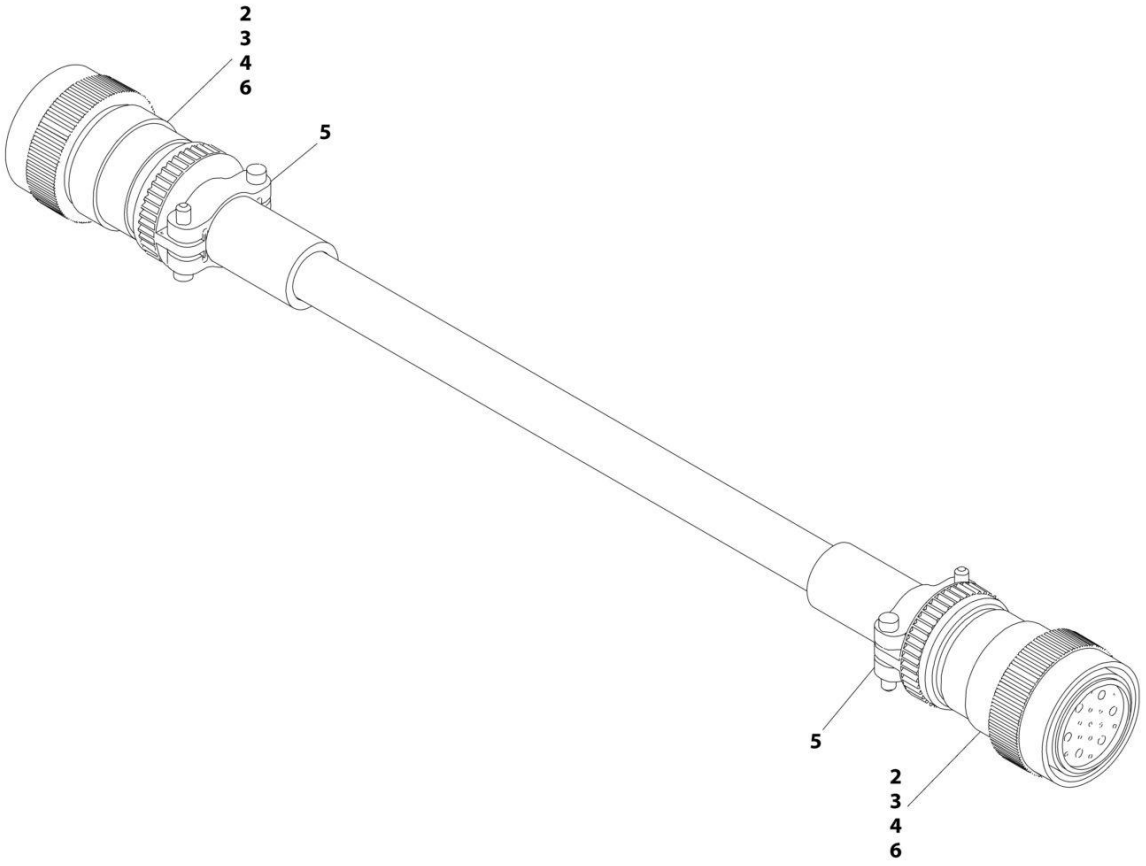

FIGURE 8-82. TOWER BOOM FLY TO GROUND CONTROL BOX HARNESS

ITEM	PART NUMBER	QTY	DESCRIPTION	REV
	4922958	Ref	TOWER BOOM FLY TO GROUND CONTROL BOX HARNESS	D
2	4460465	22	Socket, Female	
3	4461003	2	Connector - 21 Position	
4	4460509	8	Socket, Female	
5	4460473	2	Clamp, Cable	
6	4460466	12	Seal, Plug	

FIGURE 8-83. TOWER BOOM FLY TO MAIN BOOM BASE HARNESS

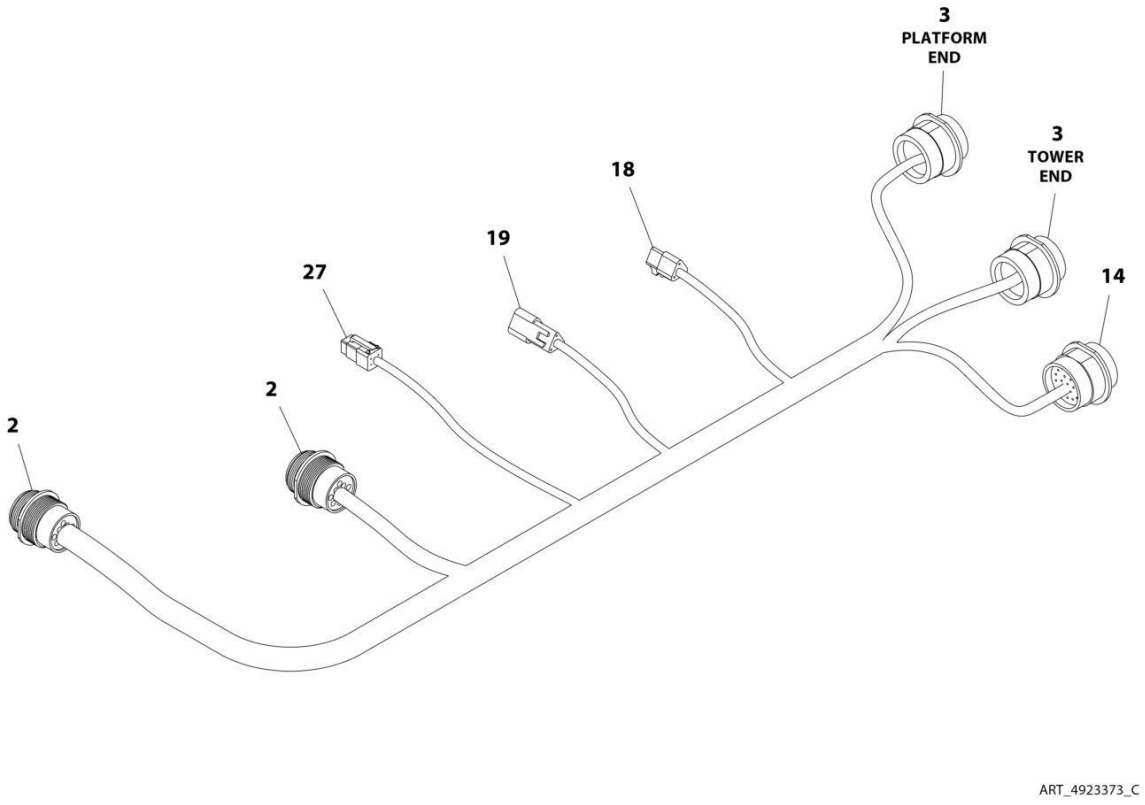

FIGURE 8-83. TOWER BOOM FLY TO MAIN BOOM BASE HARNESS

ITEM	PART NUMBER	QTY	DESCRIPTION	REV
	4923373	Ref	TOWER BOOM FLY TO MAIN BOOM BASE HARNESS	C
2	4461009	2	Connector - 5 Position	
3	4460866	2	Connector - 19 Position	
3	4460464	3	Pin, Male	
3	4460508	4	Pin, Male	
3	4460943	3	Pin, Male (Gold)	
3	4460466	4	Seal, Plug	
14	4460613	1	Connector - 21 Position	
14	4460464	8	Pin, Male	
14	4460508	5	Pin, Male	
18	4460539	1	Connector - 3 Position	
18	4460944	3	Socket, Female (Gold)	
19	4460536	1	Connector - 3 Position	
19	4460943	3	Pin, Male (Gold)	
27	4461077	1	Plug, Male	
27	4460918	4	Socket, Female (Gold)	

FIGURE 8-84. TOWER BOOM LENGTH SENSORS HARNESS

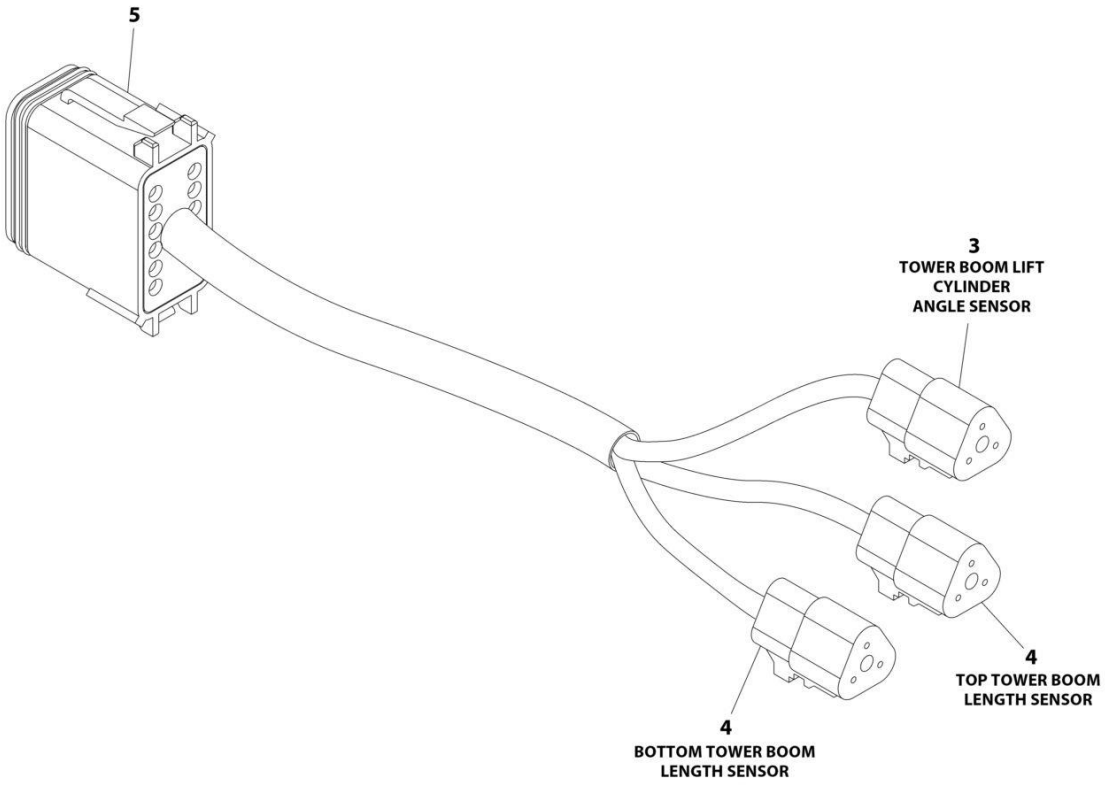

FIGURE 8-84. TOWER BOOM LENGTH SENSORS HARNESS

ITEM	PART NUMBER	QTY	DESCRIPTION	REV
	4922949	Ref	TOWER BOOM LENGTH SENSORS HARNESS	B
3	4460539	1	Connector - 3 Position	
3	4460943	3	Pin, Male (Gold)	
4	4460539	2	Connector - 3 Position	
4	4460944	6	Socket, Female (Gold)	
5	4460934	1	Connector - 12 Position	
5	4460944	11	Socket, Female (Gold)	
5	4460466	1	Plug	

FIGURE 8-85. TOWER BOOM TRANSPORT LENGTH SWITCH HARNESS

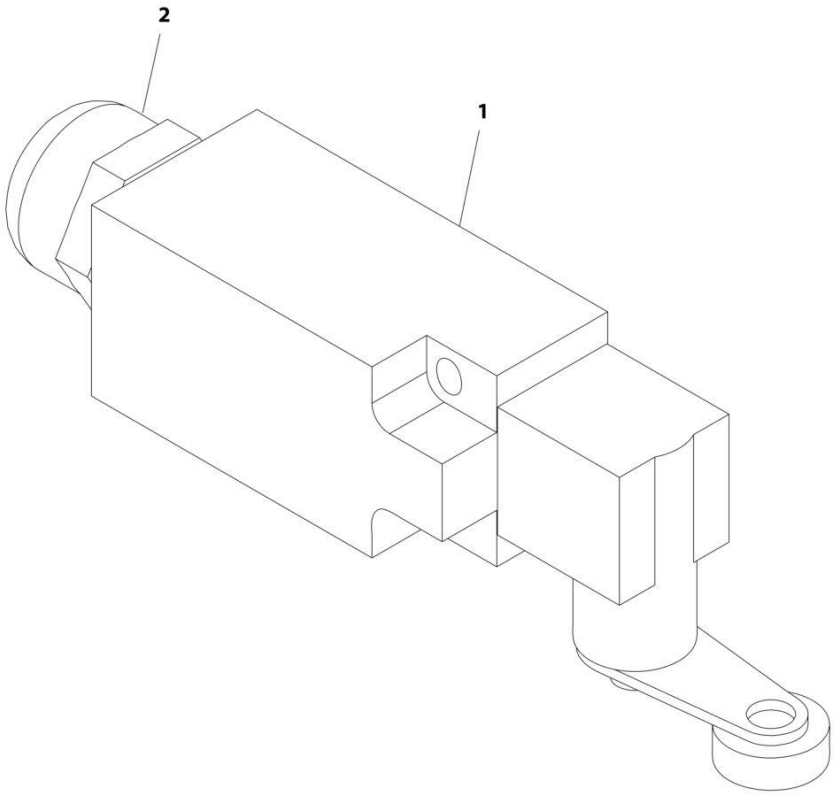

FIGURE 8-85. TOWER BOOM TRANSPORT LENGTH SWITCH HARNESS

ITEM	PART NUMBER	QTY	DESCRIPTION	REV
	4923169	Ref	TOWER BOOM TRANSPORT LENGTH SWITCH HARNESS	A
1	4360579	1	Switch, Limit	
2	4460968	1	Connector, Strain Relief	

FIGURE 8-86. SKYEYE INTERMEDIATE HARNESS

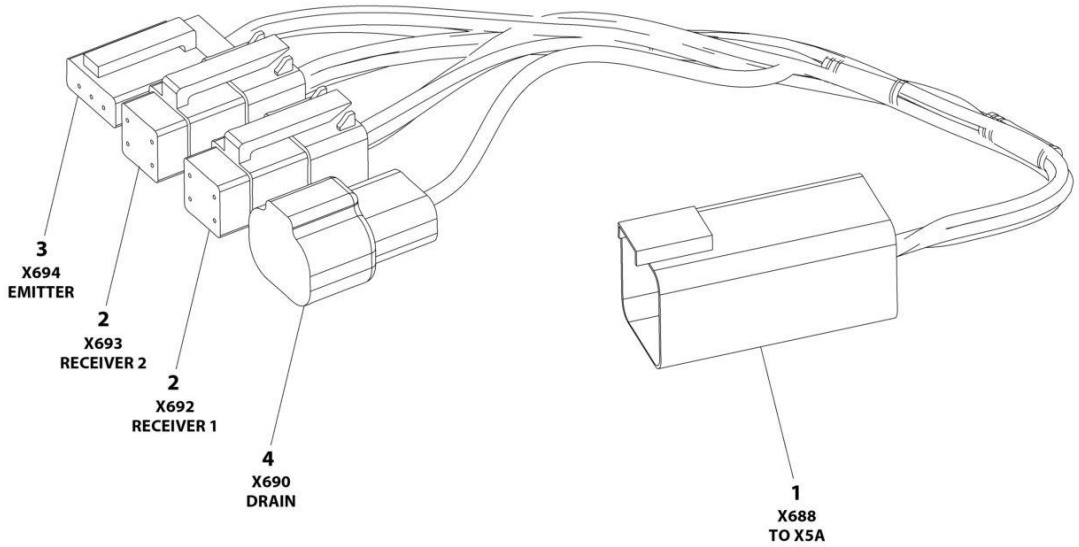

ART_1001237865

FIGURE 8-86. SKYEYE INTERMEDIATE HARNESS

ITEM	PART NUMBER	QTY	DESCRIPTION	REV
	1001237865	Ref	SKYEYE INTERMEDIATE HARNESS	A
1	4460899	1	Connector - 6 Position	
1	4460943	4	Pin, Male	
1	4460466	2	Plug, Terminal	
2	4461077	2	Connector - 4 Position	
2	1001119619	8	Socket, Female	
3	4460911	1	Connector - 3 Position	
3	1001119619	3	Socket, Female	
4	1001187681	1	Connector - 2 Position	
4	4460941	1	Pin, Male	
4	4460466	1	Plug, Terminal	

FIGURE 8-87. SKYEYE RECEIVER HARNESS

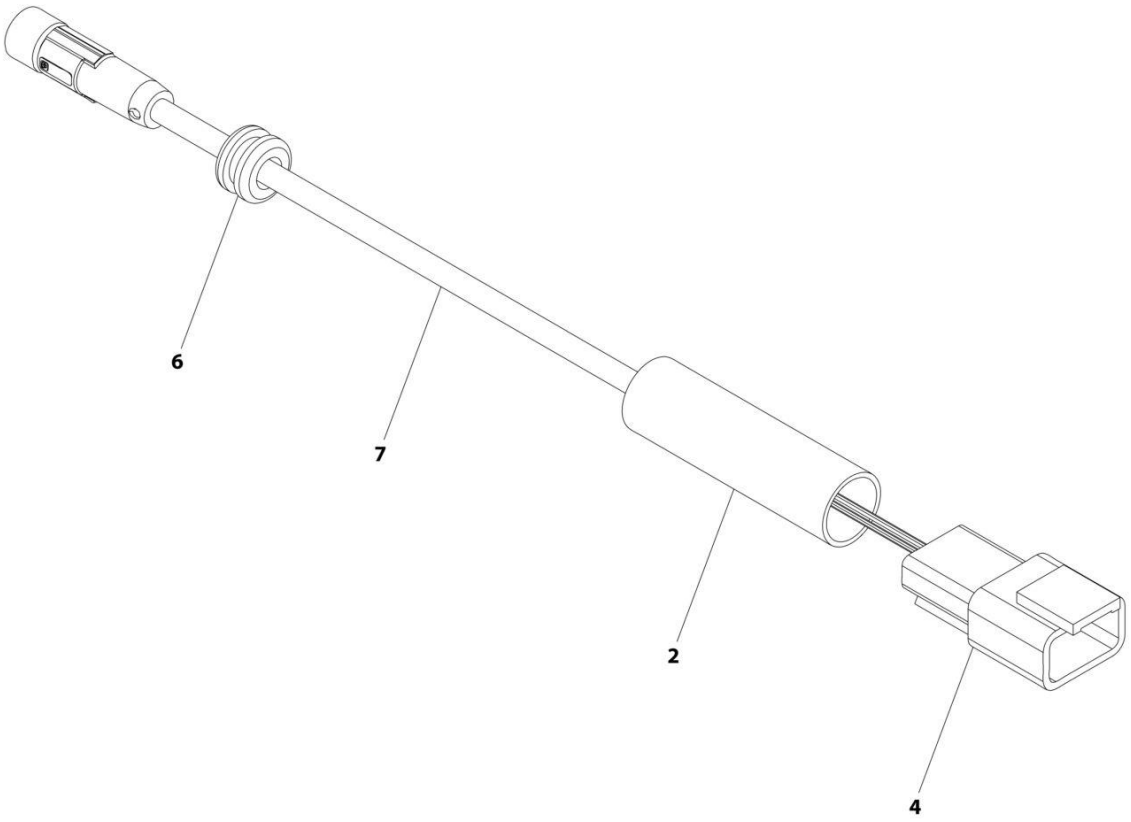

FIGURE 8-87. SKYEYE RECEIVER HARNESS

ITEM	PART NUMBER	QTY	DESCRIPTION	REV
	1001237863	Ref	SKYEYE RECEIVER HARNESS	B
2	2820247	AR	Tubing, Heat Shrink	
4	1001097051	1	Connector - 4 Position	
4	1001119620	4	Pin, Male	
6	1001227996	1	Grommet	
7	1001258495	1	Cable, M8 Female Cordset	

FIGURE 8-88. SKYEYE EMITTER HARNESS

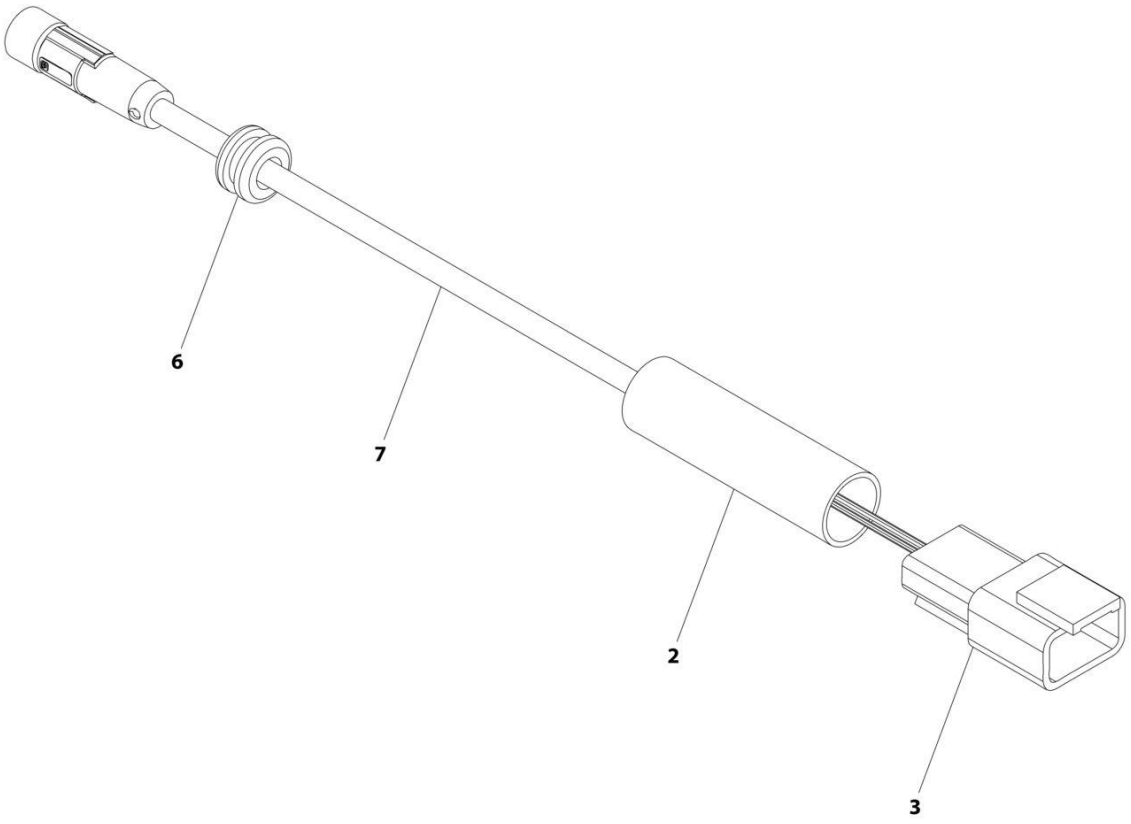

FIGURE 8-88. SKYEYE EMITTER HARNESS

ITEM	PART NUMBER	QTY	DESCRIPTION	REV
	1001237864	Ref	SKYEYE EMITTER HARNESS	B
2	2820247	AR	Tubing, Heat Shrink	
3	4460910	1	Connector - 3 Position	
3	1001119620	3	Pin, Male	
6	1001227996	1	Grommet	
7	1001258495	1	Cable, M8 Female Cordset	

FIGURE 8-89. SKYLINE HARNESS

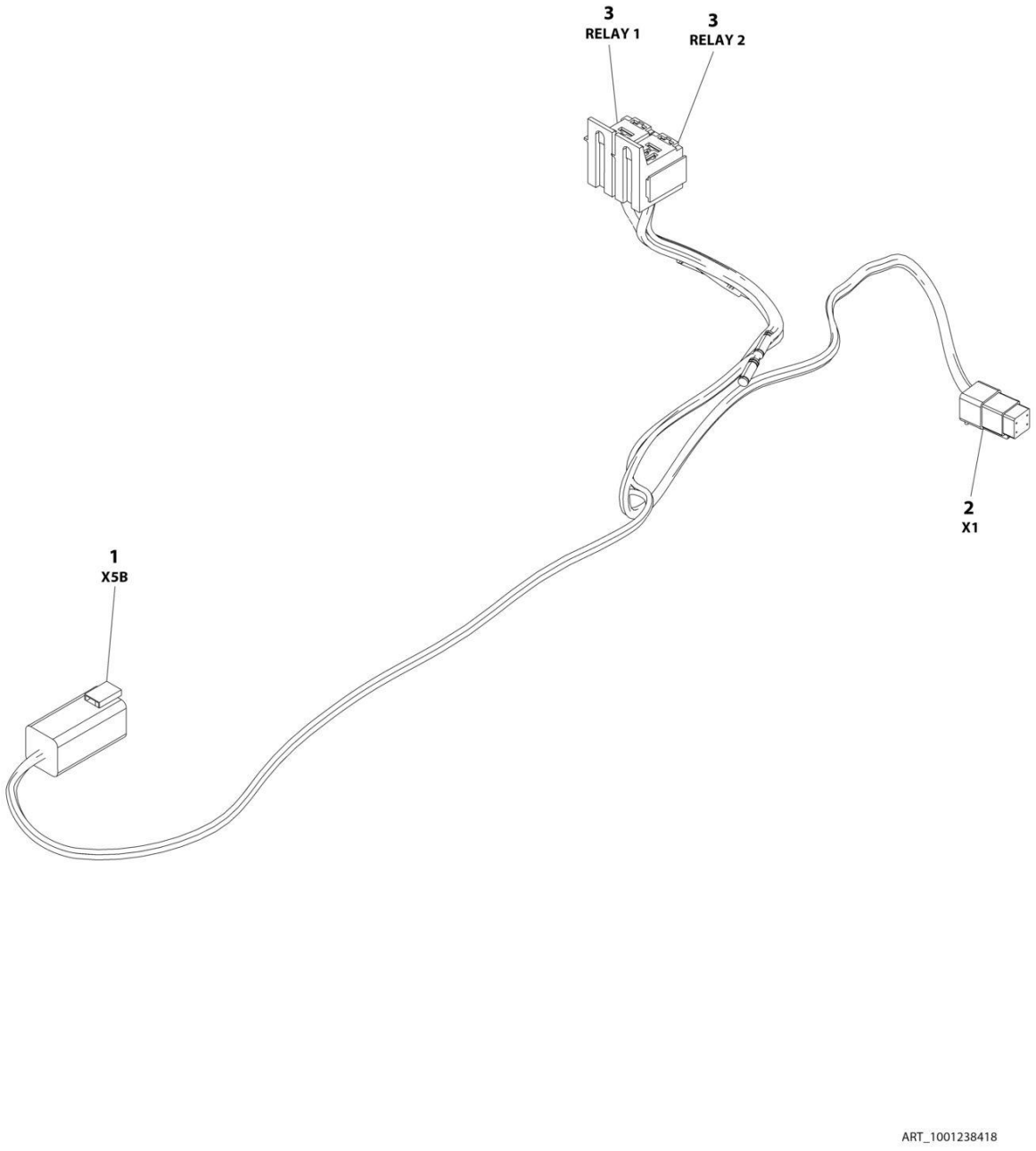

FIGURE 8-89. SKYLINE HARNESS

ITEM	PART NUMBER	QTY	DESCRIPTION	REV
	1001238418	Ref	SKYLINE HARNESS	B
1	4460899	1	Connector - 6 Position	
1	4460464	4	Pin, Male	
1	4460466	2	Plug, Terminal	
2	4461077	1	Connector - 4 Position	
2	1001126009	4	Socket, Female	
3	1001186432	2	Plug, Relay	
3	1001118388	5	Terminal	
3	1001118384	3	Terminal	
3	3740086	2	Relay	

SECTION 9 - DECALS

SECTION 9 - DECALS

FIGURE 9-1. DECAL INSTALLATION - ANSI SPEC

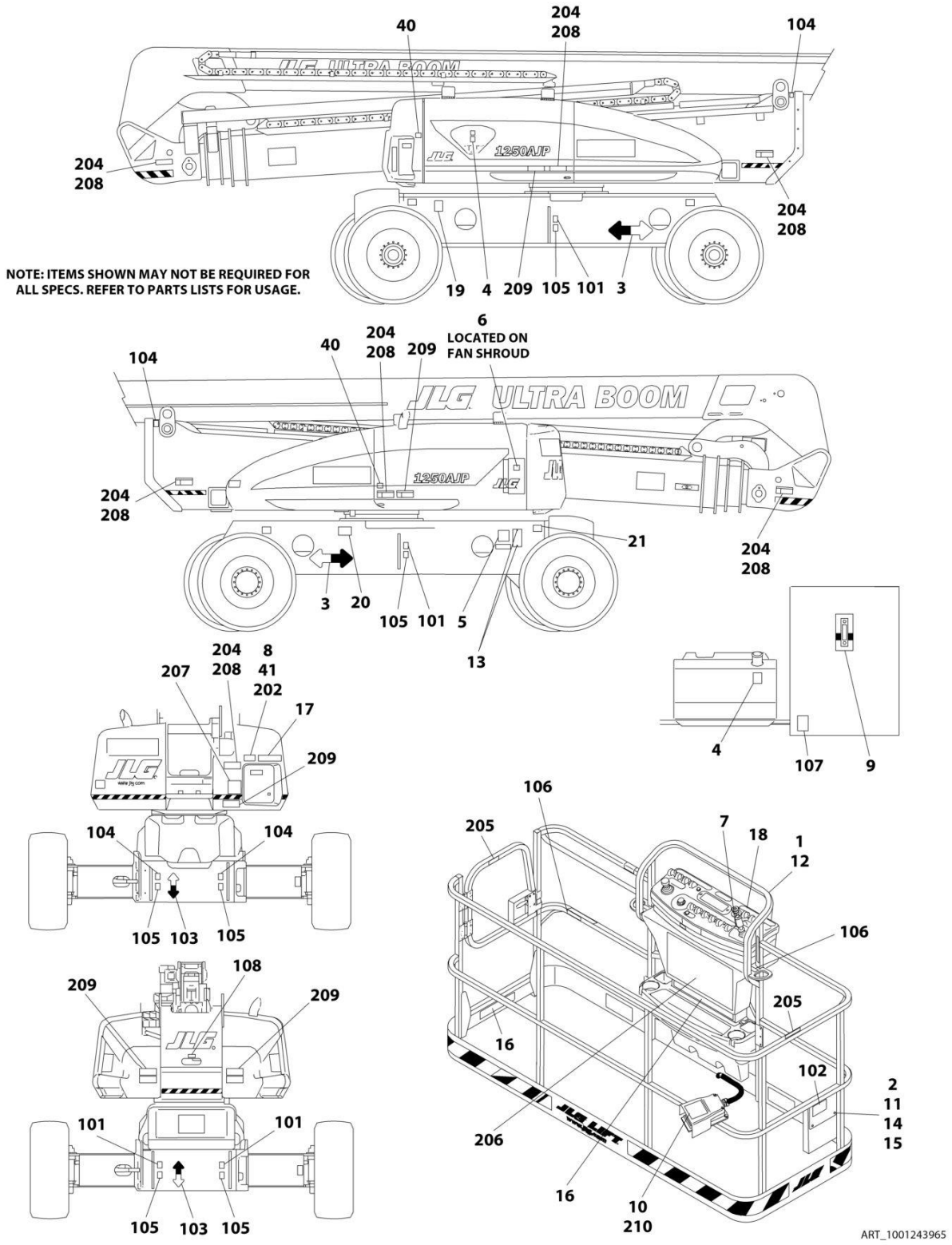

FIGURE 9-1. DECAL INSTALLATION - ANSI SPEC

ITEM	PART NUMBER	QTY	DESCRIPTION	REV
	1001251267	Ref	DECAL INSTALLATION - REFERENCE CHART	C
	1001243965	Ref	DECAL INSTALLATION - ANSI SPEC	B
1	0100048	AR	Grease, Dielectric	
2	0641406	4	Bolt 1/4 x 3/4	
3	1701501	4	Decal - Arrow	
4	1701505	2	Decal - Fuel	
5	See Note	1	Decal - Bar Code (Note: Not Available For Purchase)	
6	1704972	1	Decal - Warning Explosion/Fire (Not Shown - Located on Engine Air Filter Housing)	
7	1705351	1	Decal - Drive/Steer Instructions	
8	1705492	1	Decal - Tip Over Hazard	
9	1705511	1	Decal - Oil Level	
10	3252347	1	Decal - Footswitch	
11	3311405	4	Nut 1/4	
12	3520174	3	Plug	
13	3820001	2	Rivet	
14	4751400	4	Washer 1/4	
15	91403230	1	Box, Manual Storage	
16	1001253048	1	Decal - Capacity (Platform)	
17	1001253049	1	Decal - Capacity (Ground Control)	
18	1001122611	1	Decal - Stop	
19	1001131269	1	Decal - Patent	
20	1001223055	1	Decal - Yearly Inspection	
21	1001223453	1	Decal - Ices	
100	1001248539	1	Decal Master Kit (Not Shown - Includes Items 101-108)	
101	1701499	4	Decal - No Lift	
102	1701509	1	Decal - Manual	
103	1701529	2	Decal - Arrow	
104	1703811	8	Decal - Tie Down/Lift	
105	1703814	6	Decal - Tie Down	
106	1704277	4	Decal - Attach Lanyard Here	
107	1704412	1	Decal - Hydraulic Oil Chart	
108	3251243	1	Nameplate - 120V-60Hz	
200	1001248547	1	Decal Kit (Not Shown - Includes Items 204-209)	
204	1703953	7	Decal - Warning/Crushing	
205	1702868	2	Decal - No Hands	
206	1001231315	1	Decal - Danger/Warning (Platform)	
207	1705336	1	Decal - Danger/Warning (Ground Control)	
208	1703804	5	Decal - Warning Crushing	
209	1703805	5	Decal - Danger/Electrocution	

SECTION 9 - DECALS

FIGURE 9-2. DECAL INSTALLATION - AUSTRALIAN SPEC

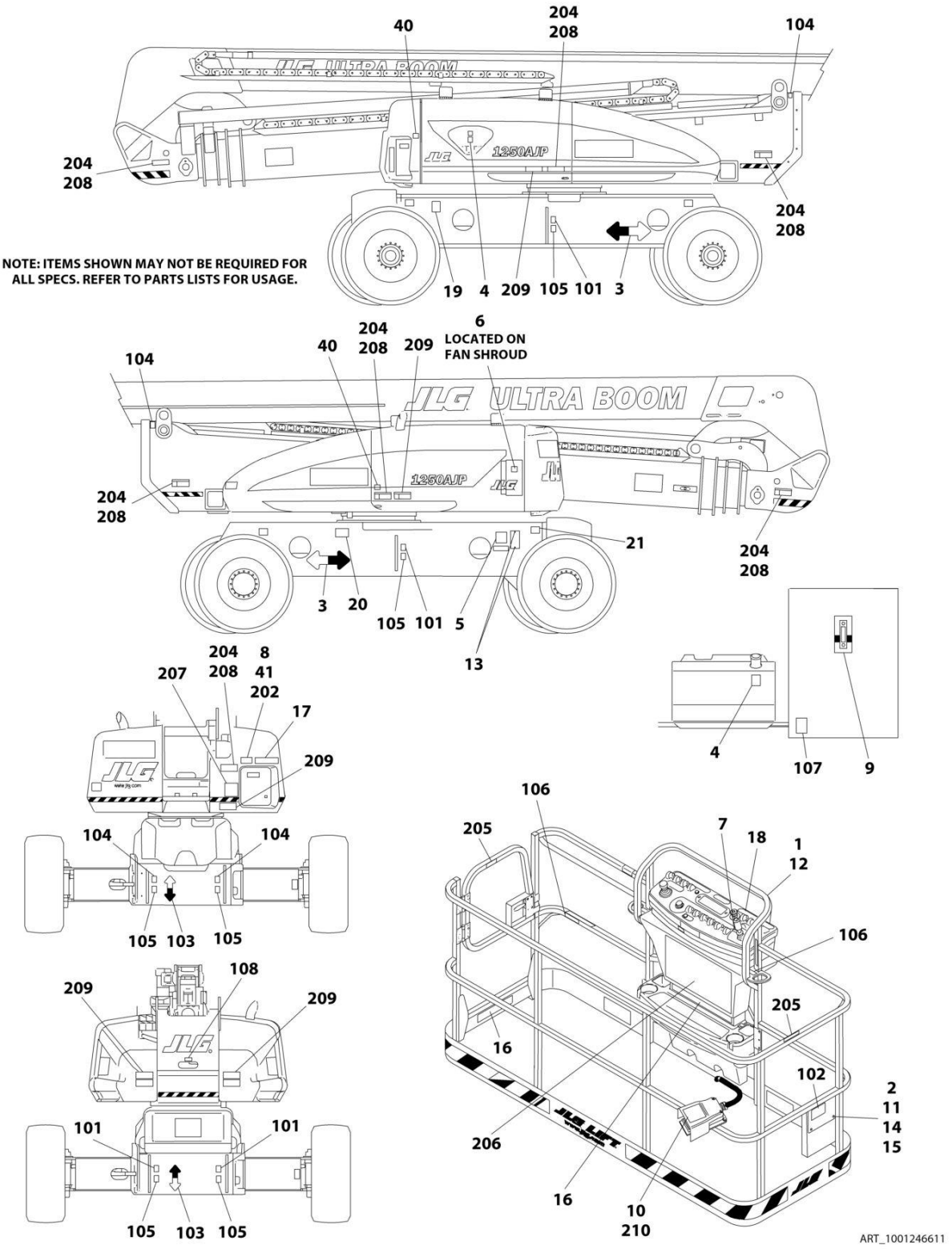

FIGURE 9-2. DECAL INSTALLATION - AUSTRALIAN SPEC

ITEM	PART NUMBER	QTY	DESCRIPTION	REV
	1001251267	Ref	DECAL INSTALLATION - REFERENCE CHART	C
	1001246611	Ref	DECAL INSTALLATION - AUSTRALIAN SPEC	A
1	0100048	AR	Grease, Dielectric	
2	0641406	4	Bolt 1/4 x 3/4	
3	1701501	4	Decal - Arrow	
4	1701505	2	Decal - Fuel	
5	See Note	1	Decal - Bar Code (Note: Not Available For Purchase)	
6	1706098	1	Decal - Warning Explosion/Fire (Not Shown - Located on Engine Air Filter Housing)	
9	1705511	1	Decal - Oil Level	
10	1705828	1	Decal - Footswitch	
11	3311405	4	Nut 1/4	
12	3520174	3	Plug	
13	3820001	6	Rivet	
14	4751400	4	Washer 1/4	
15	91403230	1	Box, Manual Storage	
16	1706770	1	Decal - Capacity (Platform)	
17	1705468	1	Decal - Capacity (Ground Control)	
18	1705174	1	Decal - Stop	
41	1001112551	1	Decal - Emergency Controls (Australian Spec)	
100	1001248540	1	Decal Master Kit (Not Shown - Includes Items 101-107)	
101	1701499	4	Decal - No Lift	
102	1701509	1	Decal - Manual	
103	1701529	2	Decal - Arrow	
104	1703811	4	Decal - Tie Down/Lift	
105	1703814	6	Decal - Tie Down	
106	1704277	4	Decal - Attach Lanyard Here	
107	1704412	1	Decal - Hydraulic Oil Chart	
200	1001248546	1	Decal Kit (Not Shown - Includes Items 206-209)	
206	1705921	1	Decal - Tipping/Electrical (Platform)	
207	1705822	1	Decal - Electrical/Safety (Ground Control)	
208	1701518	10	Decal - Warning Crushing	
209	1705961	5	Decal - Danger Electrocution	

SECTION 9 - DECALS

FIGURE 9-3. DECAL INSTALLATION - BRAZIL SPEC (PORTGUESE/ENGLISH)

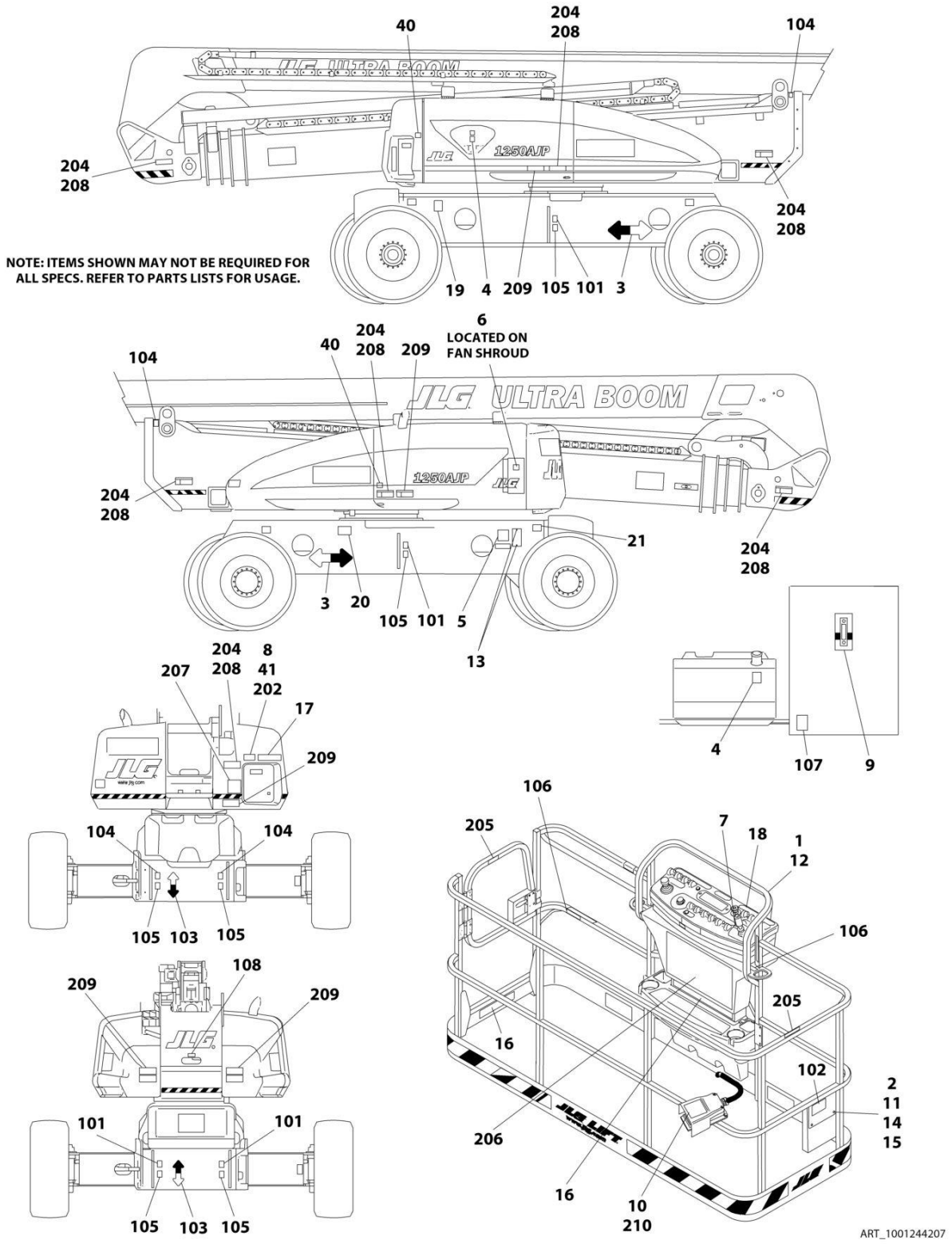

FIGURE 9-3. DECAL INSTALLATION - BRAZIL SPEC (PORTGUESE/ENGLISH)

ITEM	PART NUMBER	QTY	DESCRIPTION	REV
	1001251267	Ref	DECAL INSTALLATION - REFERENCE CHART	C
	1001244207	Ref	DECAL INSTALLATION - BRAZIL SPEC (PORTGUESE/ENGLISH)	B
2	0641406	4	Bolt 1/4 x 3/4	
3	1701501	4	Decal - Arrow	
4	1701505	2	Decal - Fuel	
5	See Note	1	Decal - Bar Code (Note: Not Available For Purchase)	
6	1706059	1	Decal - Warning Explosion/Fire (Not Shown - Located on Engine Air Filter Housing)	
7	1705905	1	Decal - Drive/Steer Instructions	
9	1705511	1	Decal - Oil Level	
11	3311405	4	Nut 1/4	
13	3820001	2	Rivet	
14	4751400	4	Washer 1/4	
15	91403230	1	Box, Manual Storage	
16	1001253057	1	Decal - Capacity (Platform)	
17	1001253058	1	Decal - Capacity (Ground Control)	
18	1001122611	1	Decal - Stop	
20	1001224052	1	Decal - Yearly Inspection	
100	1001248539	1	Decal Master Kit (Not Shown - Includes Items 101-108)	
101	1701499	4	Decal - No Lift	
102	1701509	1	Decal - Manual	
103	1701529	2	Decal - Arrow	
104	1703811	8	Decal - Tie Down/Lift	
105	1703814	6	Decal - Tie Down	
106	1704277	4	Decal - Attach Lanyard Here	
107	1704412	1	Decal - Hydraulic Oil Chart	
108	3251243	1	Nameplate - 120V-60Hz	
200	1001248551	1	Decal Kit (Not Shown - Includes Items 202-210)	
202	1705906	1	Decal - Tip Over Hazard	
203	1705901	1	Decal - Inspection (Not Shown)	
204	1705903	7	Decal - Warning/Crushing	
205	1705967	2	Decal - No Hands	
206	1001231319	1	Decal - Danger/Warning (Platform)	
207	1705896	1	Decal - Danger/Warning (Ground Control)	
208	1705898	5	Decal - Warning Crushing	
209	1705897	5	Decal - Danger/Electrocution	
210	1705902	1	Decal - Footswitch	

SECTION 9 - DECALS

FIGURE 9-4. DECAL INSTALLATION - CE & UK CA SPEC

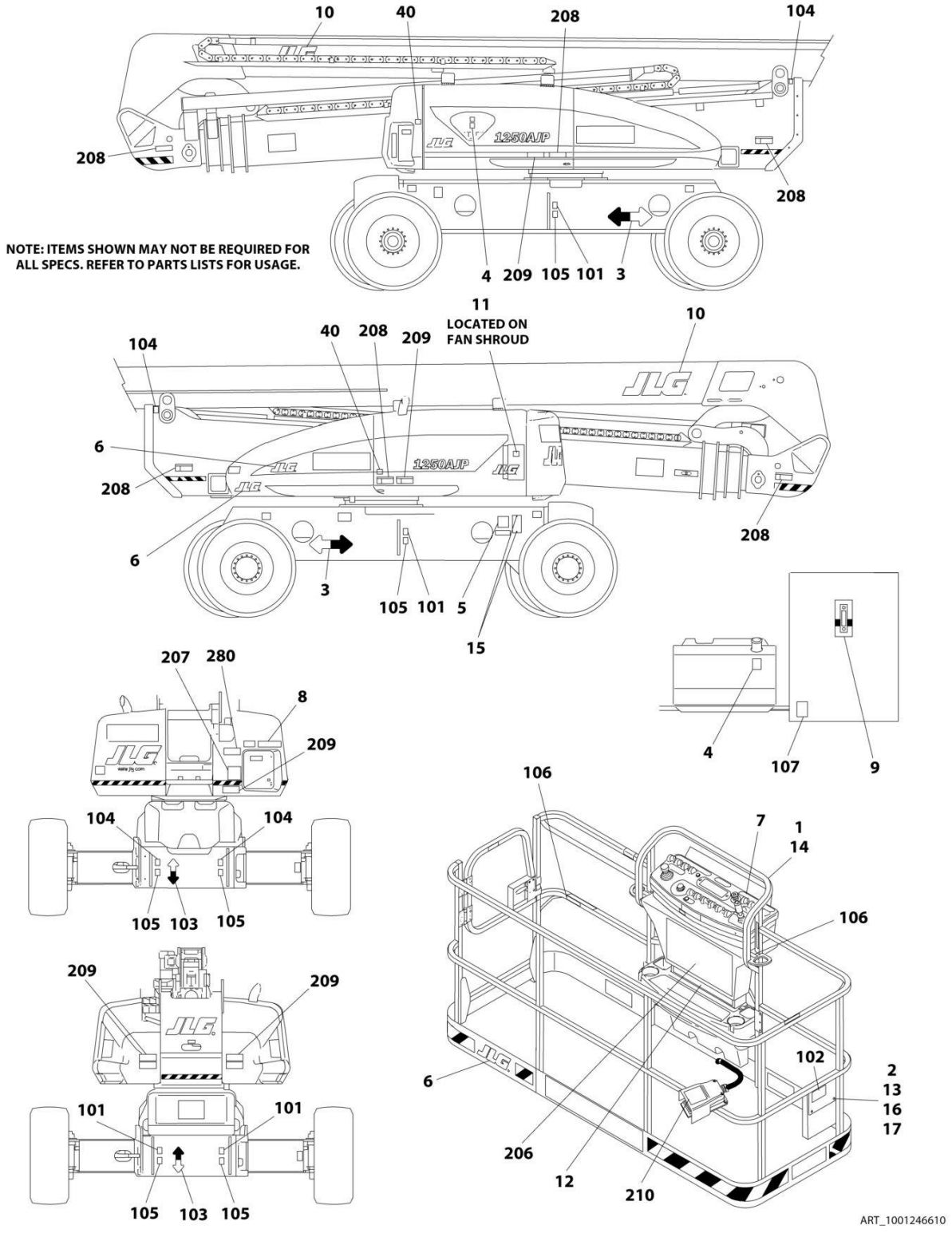

FIGURE 9-4. DECAL INSTALLATION - CE & UK CA SPEC

ITEM	PART NUMBER	QTY	DESCRIPTION	REV
	1001251268	Ref	DECAL INSTALLATION - REFERENCE CHART	C
	1001246610	Ref	DECAL INSTALLATION - CE & UK CA SPEC	A
1	0100048	AR	Grease, Dielectric	
2	0641406	7	Bolt 1/4 x 3/4	
3	1701501	4	Decal - Arrow	
4	1701505	2	Decal - Fuel	
5	See Note	1	Decal - Bar Code (Note: Not Available For Purchase)	
6	1702773	3	Decal - JLG	
7	1705174	1	Decal - Stop	
8	1705468	1	Decal - Capacity (Ground Control)	
9	1705511	1	Decal - Oil Level	
10	1705864	2	Decal - JLG	
11	1706098	1	Decal - Warning Explosion/Fire (Not Shown - Located on Engine Air Filter Housing)	
12	1706770	1	Decal - Capacity (Platform)	
13	3311405	4	Nut 1/4	
14	3520174	3	Plug	
15	3820001	6	Rivet	
16	4751400	7	Washer 1/4	
17	91403230	1	Box, Manual Storage	
100	1001248540	1	Decal Master Kit (Not Shown - Includes Items 101-107)	
101	1701499	4	Decal - No Lift	
102	1701509	1	Decal - Manual	
103	1701529	2	Decal - Arrow	
104	1703811	4	Decal - Tie Down/Lift	
105	1703814	6	Decal - Tie Down	
106	1704277	4	Decal - Attach Lanyard Here	
107	1704412	1	Decal - Hydraulic Oil Chart	
200	1001248546	1	Decal Kit (Not Shown - Includes Items 206-210)	
206	1705921	1	Decal - Tipping/Electrical (Platform)	
207	1705822	1	Decal - Electrical/Safety (Ground Control)	
208	1701518	10	Decal - Warning Crushing	
209	1705961	5	Decal - Danger Electrocution	
210	1705828	1	Decal - Footswitch	

SECTION 9 - DECALS

FIGURE 9-5. DECAL INSTALLATION - CHINESE SPEC (CHINESE/ENGLISH)

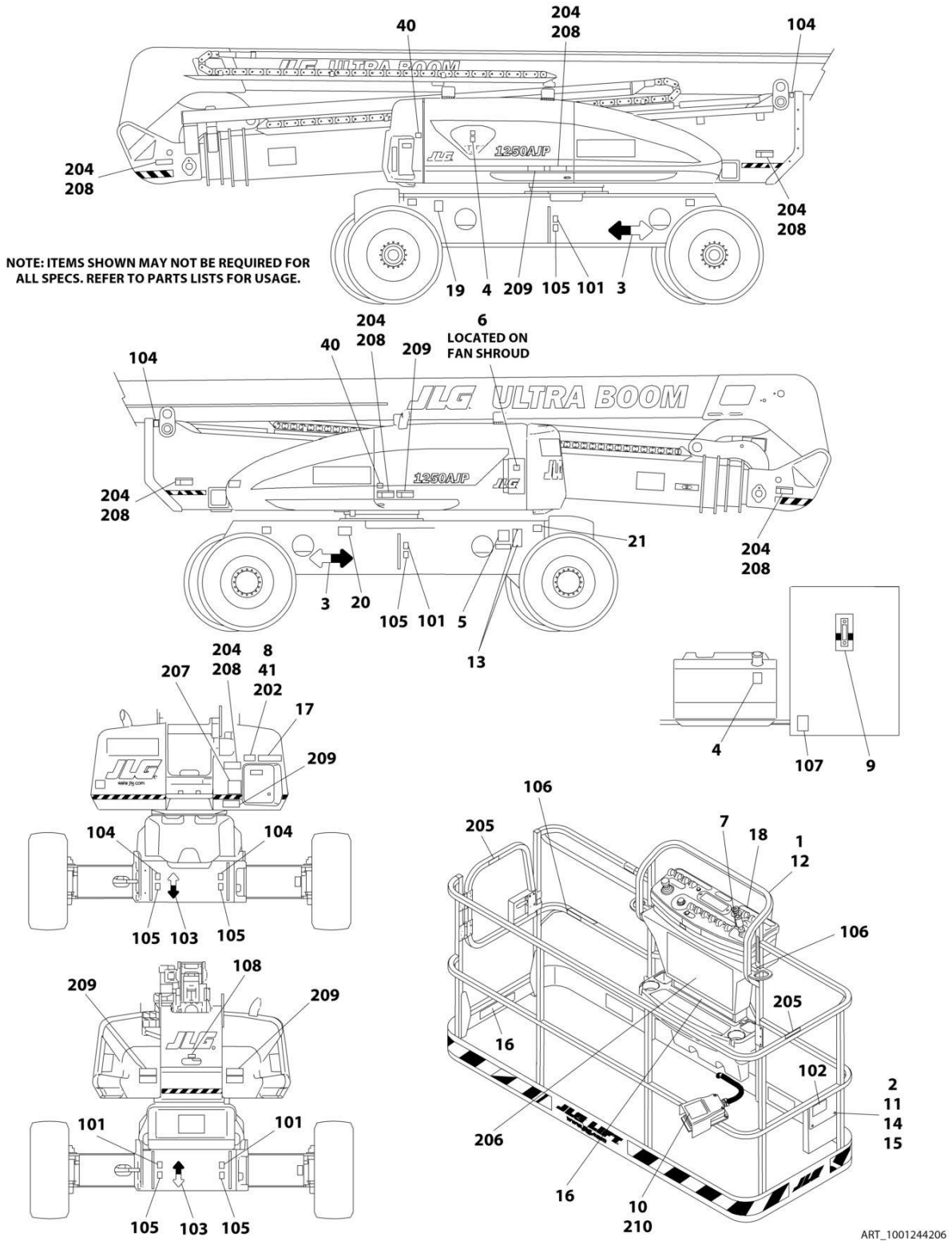

FIGURE 9-5. DECAL INSTALLATION - CHINESE SPEC (CHINESE/ENGLISH)

ITEM	PART NUMBER	QTY	DESCRIPTION	REV
	1001251267	Ref	DECAL INSTALLATION - REFERENCE CHART	C
	1001244206	Ref	DECAL INSTALLATION - CHINESE SPEC (CHINESE/ENGLISH)	B
2	0641406	4	Bolt 1/4 x 3/4	
3	1701501	4	Decal - Arrow	
4	1701505	2	Decal - Fuel	
5	See Note	1	Decal - Bar Code (Note: Not Available For Purchase)	
6	1706060	1	Decal - Warning Explosion/Fire (Not Shown - Located on Engine Air Filter Housing)	
7	1705430	1	Decal - Drive/Steer Instructions	
9	1705511	1	Decal - Oil Level	
11	3311405	4	Nut 1/4	
13	3820001	2	Rivet	
14	4751400	4	Washer 1/4	
15	91403230	1	Box, Manual Storage	
16	1001253054	2	Decal - Capacity (Platform)	
17	1001253056	1	Decal - Capacity (Ground Control)	
18	1001122611	1	Decal - Stop	
20	1001224050	1	Decal - Yearly Inspection	
40	1001244298	2	Decal - Wechat QR Code	
100	1001248539	1	Decal Master Kit (Not Shown - Includes Items 101-108)	
101	1701499	4	Decal - No Lift	
102	1701509	1	Decal - Manual	
103	1701529	2	Decal - Arrow	
104	1703811	8	Decal - Tie Down/Lift	
105	1703814	6	Decal - Tie Down	
106	1704277	4	Decal - Attach Lanyard Here	
107	1704412	1	Decal - Hydraulic Oil Chart	
108	3251243	1	Nameplate - 120V-60Hz	
200	1001248553	1	Decal Kit (Not Shown - Includes Items 202-210)	
202	1001117035	1	Decal - Tip Over Hazard	
204	1703943	7	Decal - Warning/Crushing	
205	1001116846	2	Decal - No Hands	
206	1001231321	1	Decal - Danger/Warning (Platform)	
207	1001116849	2	Decal - Danger/Warning (Ground Control)	
208	1703949	5	Decal - Warning Crushing	
209	1001116851	5	Decal - Danger/Electrocution	
210	1703982	1	Decal - Footswitch	

SECTION 9 - DECALS

FIGURE 9-6. DECAL INSTALLATION - CSA SPEC (ENGLISH/FRENCH)

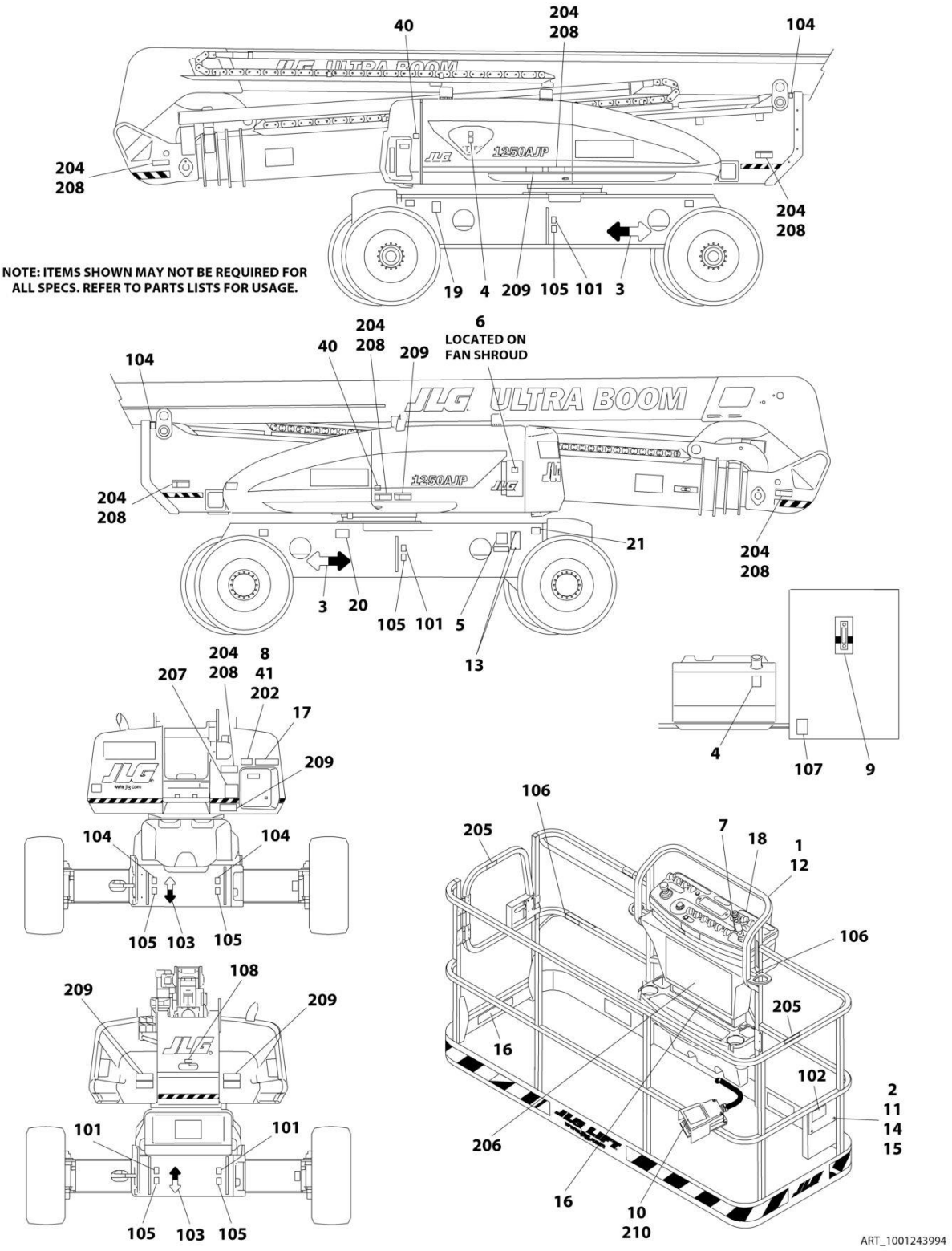

FIGURE 9-6. DECAL INSTALLATION - CSA SPEC (ENGLISH/FRENCH)

ITEM	PART NUMBER	QTY	DESCRIPTION	REV
	1001251267	Ref	DECAL INSTALLATION - REFERENCE CHART	C
	1001243994	Ref	DECAL INSTALLATION - CSA SPEC (ENGLISH/FRENCH)	B
2	0641406	4	Bolt 1/4 x 3/4	
3	1701501	4	Decal - Arrow	
4	1701505	2	Decal - Fuel	
5	See Note	1	Decal - Bar Code (Note: Not Available For Purchase)	
6	1706064	1	Decal - Warning Explosion/Fire (Not Shown - Located on Engine Air Filter Housing)	
7	1705429	1	Decal - Drive/Steer Instructions	
9	1705511	1	Decal - Oil Level	
11	3311405	4	Nut 1/4	
13	3820001	2	Rivet	
14	4751400	4	Washer 1/4	
15	91403230	1	Box, Manual Storage	
16	1001253050	1	Decal - Capacity (Platform)	
17	1001253051	1	Decal - Capacity (Ground Control)	
18	1705174	1	Decal - Stop	
19	1001131269	1	Decal - Patent	
20	1001223971	1	Decal - Yearly Inspection	
21	1001223453	1	Decal - Ices	
100	1001248539	1	Decal Master Kit (Not Shown - Includes Items 101-108)	
101	1701499	4	Decal - No Lift	
102	1701509	1	Decal - Manual	
103	1701529	2	Decal - Arrow	
104	1703811	8	Decal - Tie Down/Lift	
105	1703814	6	Decal - Tie Down	
106	1704277	4	Decal - Attach Lanyard Here	
107	1704412	1	Decal - Hydraulic Oil Chart	
108	3251243	1	Nameplate - 120V-60Hz	
200	1001248548	1	Decal Kit (Not Shown - Includes Items 202-210)	
202	1705505	1	Decal - Tip Over Hazard	
204	1703942	7	Decal - Warning/Crushing	
205	1704000	2	Decal - No Hands	
206	1001231316	1	Decal - Danger/Warning (Platform)	
207	1705347	1	Decal - Danger/Warning (Ground Control)	
208	1703948	5	Decal - Warning Crushing	
209	1703936	5	Decal - Danger/Electrocution	
210	1703984	1	Decal - Footswitch	

SECTION 9 - DECALS

FIGURE 9-7. DECAL INSTALLATION - JAPANESE SPEC (JAPANESE/ENGLISH)

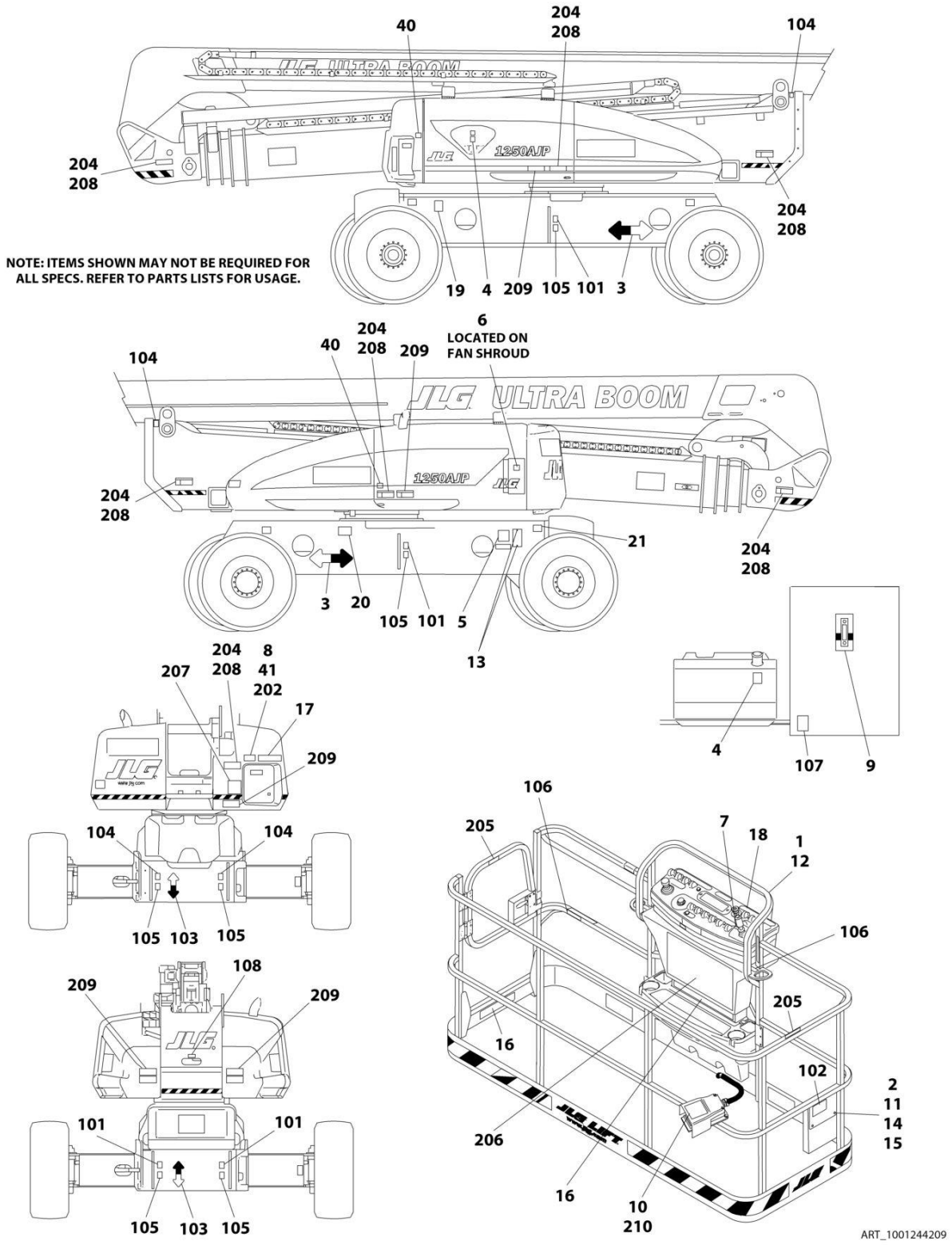

FIGURE 9-7. DECAL INSTALLATION - JAPANESE SPEC (JAPANESE/ENGLISH)

ITEM	PART NUMBER	QTY	DESCRIPTION	REV
	1001251267	Ref	DECAL INSTALLATION - REFERENCE CHART	C
	1001244209	Ref	DECAL INSTALLATION - JAPANESE SPEC (JAPANESE/ENGLISH)	B
2	0641406	4	Bolt 1/4 x 3/4	
3	1701501	4	Decal - Arrow	
4	1701505	2	Decal - Fuel	
5	See Note	1	Decal - Bar Code (Note: Not Available For Purchase)	
6	1706062	1	Decal - Warning Explosion/Fire (Not Shown - Located on Engine Air Filter Housing)	
7	1705426	1	Decal - Drive/Steer Instructions	
9	1705511	1	Decal - Oil Level	
11	3311405	4	Nut 1/4	
13	3820001	2	Rivet	
14	4751400	4	Washer 1/4	
15	91403230	1	Box, Manual Storage	
16	1001253061	1	Decal - Capacity (Platform)	
17	1001253062	1	Decal - Capacity (Ground Control)	
18	1001122611	1	Decal - Stop	
20	1001224053	1	Decal - Yearly Inspection	
100	1001248539	1	Decal Master Kit (Not Shown - Includes Items 101-108)	
101	1701499	4	Decal - No Lift	
102	1701509	1	Decal - Manual	
103	1701529	2	Decal - Arrow	
104	1703811	8	Decal - Tie Down/Lift	
105	1703814	6	Decal - Tie Down	
106	1704277	4	Decal - Attach Lanyard Here	
107	1704412	1	Decal - Hydraulic Oil Chart	
108	3251243	1	Nameplate - 120V-60Hz	
200	1001248552	1	Decal Kit (Not Shown - Includes Items 202-210)	
202	1705493	1	Decal - Tip Over Hazard	
204	1703944	7	Decal - Warning/Crushing	
206	1001231320	1	Decal - Danger/Warning (Platform)	
207	1705344	1	Decal - Danger/Warning (Ground Control)	
208	1703950	5	Decal - Warning Crushing	
209	1703938	5	Decal - Danger/Electrocution	
210	1703980	1	Decal - Footswitch	

SECTION 9 - DECALS

FIGURE 9-8. DECAL INSTALLATION - KOREAN SPEC (KOREAN/ENGLISH)

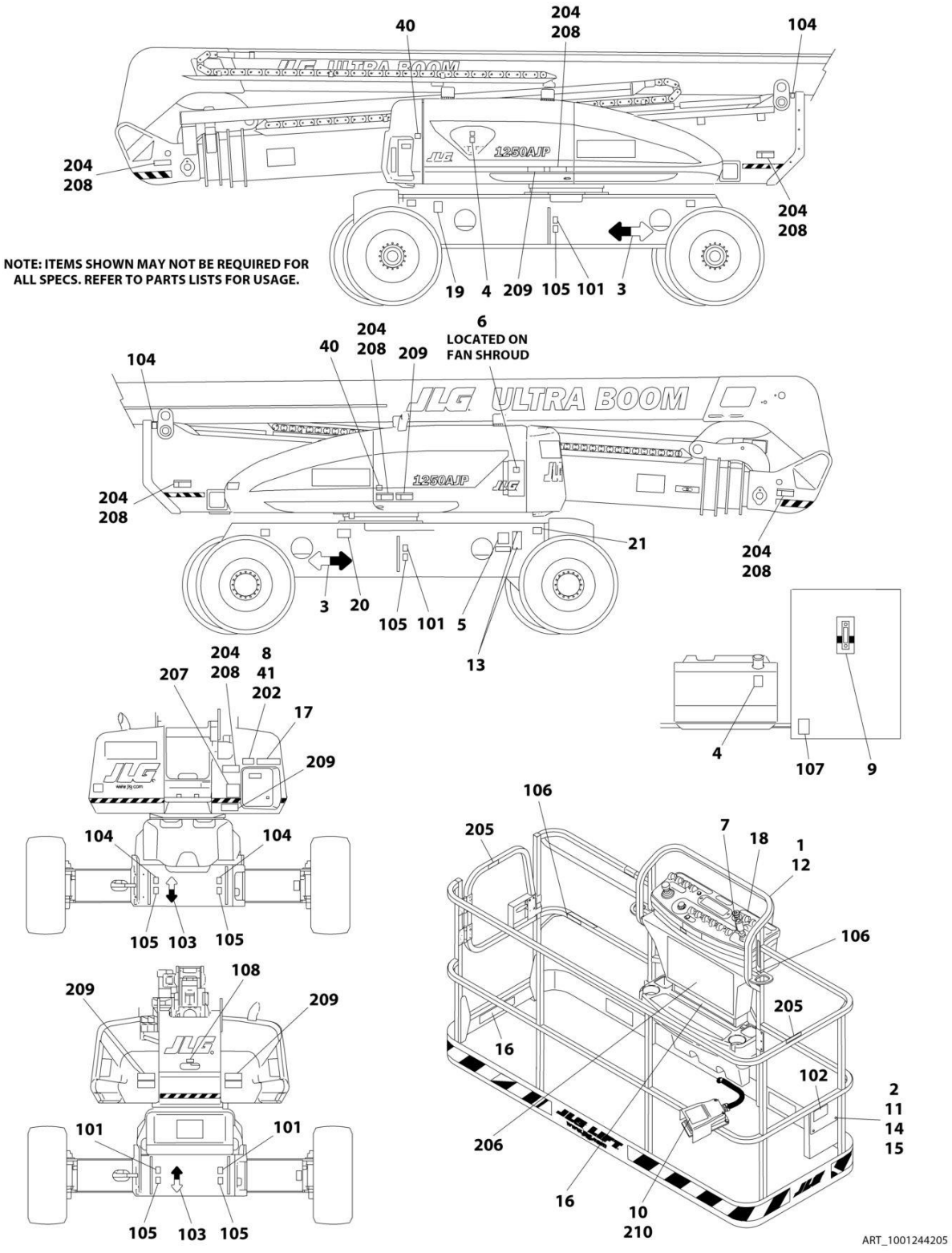

FIGURE 9-8. DECAL INSTALLATION - KOREAN SPEC (KOREAN/ENGLISH)

ITEM	PART NUMBER	QTY	DESCRIPTION	REV
	1001251267	Ref	DECAL INSTALLATION - REFERENCE CHART	C
	1001244205	Ref	DECAL INSTALLATION - KOREAN SPEC (KOREAN/ENGLISH)	B
2	0641406	4	Bolt 1/4 x 3/4	
3	1701501	4	Decal - Arrow	
4	1701505	2	Decal - Fuel	
5	See Note	1	Decal - Bar Code (Note: Not Available For Purchase)	
6	1706061	1	Decal - Warning Explosion/Fire (Not Shown - Located on Engine Air Filter Housing)	
7	1705427	1	Decal - Drive/Steer Instructions	
9	1705511	1	Decal - Oil Level	
11	3311405	4	Nut 1/4	
13	3820001	2	Rivet	
14	4751400	4	Washer 1/4	
15	91403230	1	Box, Manual Storage	
16	1001253052	1	Decal - Capacity (Platform)	
17	1001253053	1	Decal - Capacity (Ground Control)	
18	1001122611	1	Decal - Stop	
20	1001224048	1	Decal - Yearly Inspection	
100	1001248539	1	Decal Master Kit (Not Shown - Includes Items 101-108)	
101	1701499	4	Decal - No Lift	
102	1701509	1	Decal - Manual	
103	1701529	2	Decal - Arrow	
104	1703811	8	Decal - Tie Down/Lift	
105	1703814	6	Decal - Tie Down	
106	1704277	4	Decal - Attach Lanyard Here	
107	1704412	1	Decal - Hydraulic Oil Chart	
108	3251243	1	Nameplate - 120V-60Hz	
200	1001248549	1	Decal Kit (Not Shown - Includes Items 202-210)	
202	1705503	AR	Decal - Tip Over Hazard	
204	1703945	7	Decal - Warning/Crushing	
205	1705969	2	Decal - No Hands	
206	1001231317	1	Decal - Danger/Warning (Platform)	
207	1705345	1	Decal - Danger/Warning (Ground Control)	
208	1703951	5	Decal - Warning Crushing	
209	1703939	5	Decal - Danger/Electrocution	
210	1703981	1	Decal - Footswitch	

SECTION 9 - DECALS

FIGURE 9-9. DECAL INSTALLATION - LATIN AMERICAN SPEC (SPANISH/ENGLISH)

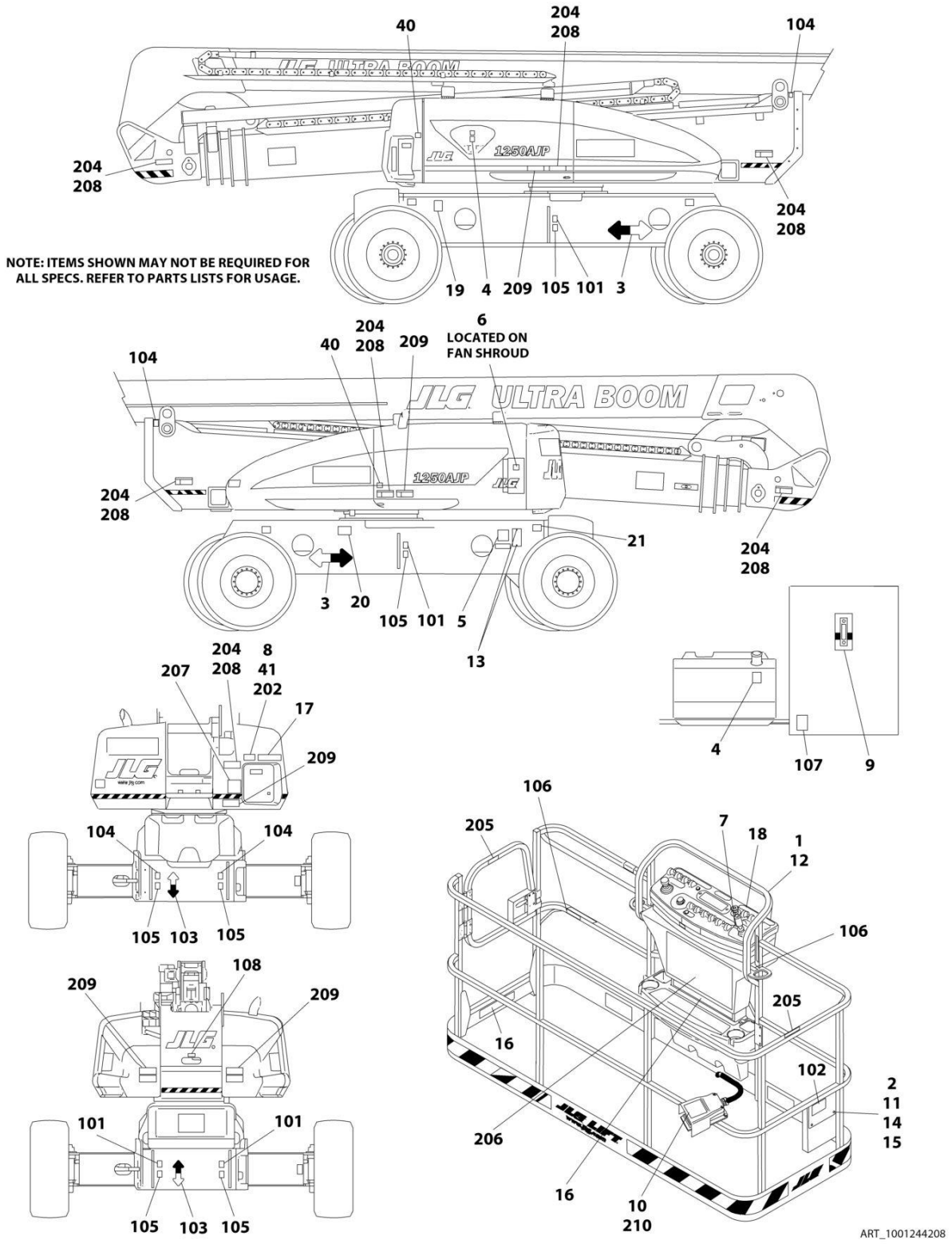

FIGURE 9-9. DECAL INSTALLATION - LATIN AMERICAN SPEC (SPANISH/ENGLISH)

ITEM	PART NUMBER	QTY	DESCRIPTION	REV
	1001251267	Ref	DECAL INSTALLATION - REFERENCE CHART	C
	1001244208	Ref	DECAL INSTALLATION - LATIN AMERICAN SPEC (SPANISH/ENGLISH)	B
2	0641406	4	Bolt 1/4 x 3/4	
3	1701501	4	Decal - Arrow	
4	1701505	2	Decal - Fuel	
5	See Note	1	Decal - Bar Code (Note: Not Available For Purchase)	
6	1706061	1	Decal - Warning Explosion/Fire (Not Shown - Located on Engine Air Filter Housing)	
7	1705910	1	Decal - Drive/Steer Instructions	
9	1705511	1	Decal - Oil Level	
11	3311405	4	Nut 1/4	
13	3820001	2	Rivet	
14	4751400	4	Washer 1/4	
15	91403230	1	Box, Manual Storage	
16	1001253059	1	Decal - Capacity (Platform)	
17	1001253060	1	Decal - Capacity (Ground Control)	
18	1001122611	1	Decal - Stop	
20	1001224049	1	Decal - Yearly Inspection	
100	1001248539	1	Decal Master Kit (Not Shown - Includes Items 101-108)	
101	1701499	4	Decal - No Lift	
102	1701509	1	Decal - Manual	
103	1701529	2	Decal - Arrow	
104	1703811	8	Decal - Tie Down/Lift	
105	1703814	6	Decal - Tie Down	
106	1704277	4	Decal - Attach Lanyard Here	
107	1704412	1	Decal - Hydraulic Oil Chart	
108	3251243	1	Nameplate - 120V-60Hz	
200	1001248550	1	Decal Kit (Not Shown - Includes Items 202-210)	
202	1705915	AR	Decal - Tip Over Hazard	
204	1703941	7	Decal - Warning/Crushing	
205	1704001	2	Decal - No Hands	
206	1001231318	1	Decal - Danger/Warning (Platform)	
207	1705917	1	Decal - Danger/Warning (Ground Control)	
208	1703947	5	Decal - Warning Crushing	
209	1703935	5	Decal - Danger/Electrocution	
210	1703983	1	Decal - Footswitch	

FIGURE 9-10. DECAL INSTALLATION - OPTIONS

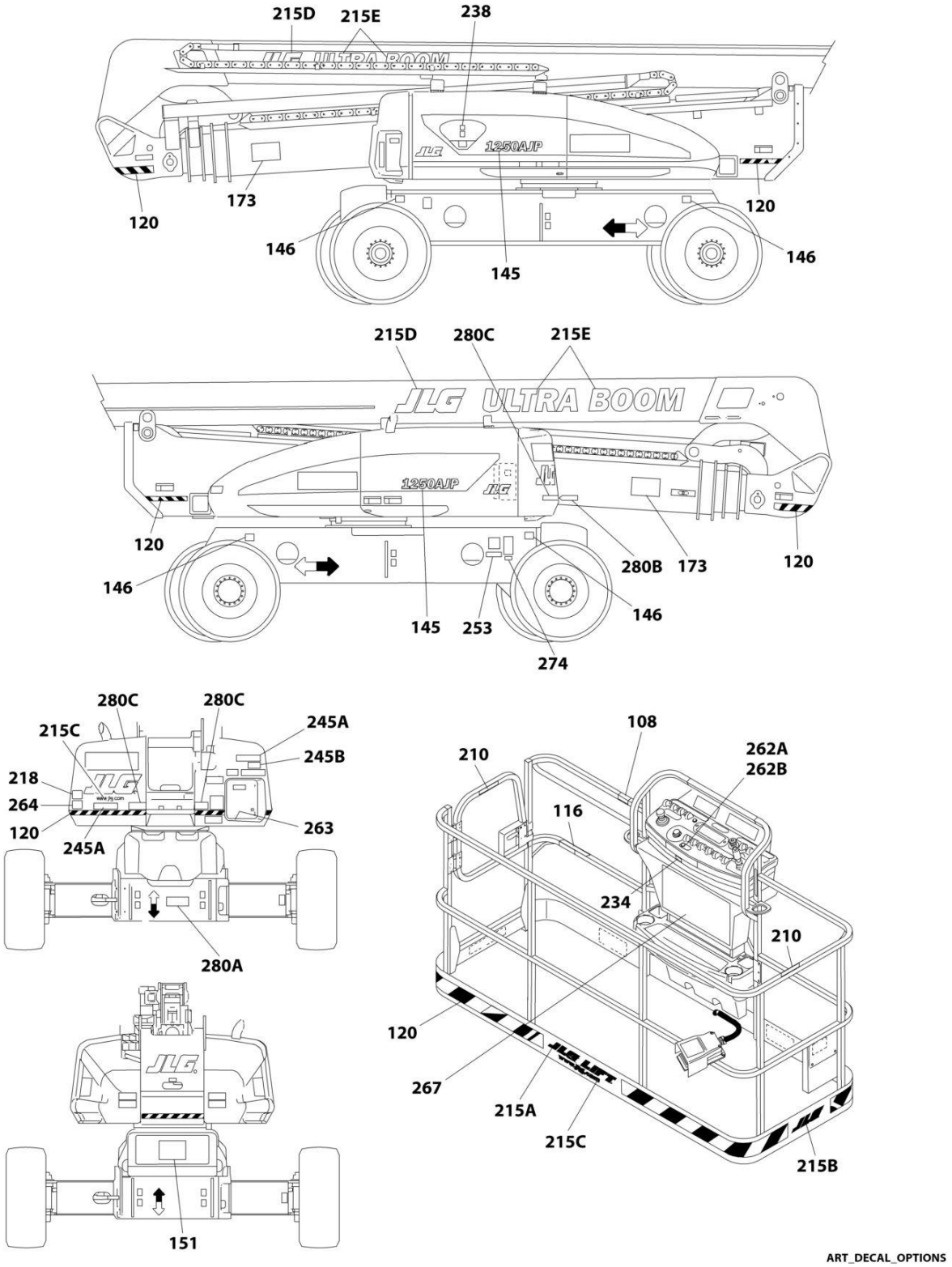

FIGURE 9-10. DECAL INSTALLATION - OPTIONS

ITEM	PART NUMBER	QTY	DESCRIPTION	REV
	1001251267	Ref	DECAL INSTALLATION – REFERENCE CHART (ALL SPECS EXCEPT CE & UK CA SPECS)	C
	1001251268	Ref	DECAL INSTALLATION – REFERENCE CHART (CE & UK CA SPECS)	C
	1001261250	Ref	DECAL INSTALLATION - OPTIONS	B
108	1001231801	1	Decal - Warning (Proposition 65) (ANSI Spec Only)	
116	1703175	2	Decal - Lanyard Attach (GM Spec Only)	
120	4420051	29 ft /8.8m	Decal - Warning Stripes	
145	1001268241	2	Decal - Model 1250AJP	
146	1703483	4	Decal - Tire Load	
151	1705838	1	Decal - Lift Diagram	
173	1703959	2	Decal - Quikstik	
210	1702868	2	Decal - No Hands (ANSI and ANSI Export Specs)	
210	1704000	2	Decal - No Hands (CSA Specs) (French/English)	
210	1704001	2	Decal - No Hands (ANSI Export Specs) (Spanish/English)	
210	1705969	2	Decal - No Hands (ANSI Export Specs) (Korean/English)	
210	1705967	2	Decal - No Hands (ANSI Export Specs) (English/Portuguese)	
215	0274730	Ref	Decal - JLG Logo	
215A	1702774	1	Decal - JLG Lift	
215B	1702773	1	Decal - JLG	
215C	1704885	1	Decal - www.jlg.com	
215D	1705864	2	Decal - JLG	
215E	1001267315	1	Decal - Ultra Boom	
218	3251813	1	Decal - USA (ANSI, ANSI Export and CSA Specs)	
234	1001094055	1	Decal - Troubleshooting	
238	1001125387	1	Decal - Fuel Specification (Machines with Deutz TCD2.9L4 Engine Only) (ANSI and CSA Specs)	
238	1001139654	1	Decal - Fuel Specification (Machines with Deutz TCD2.9L4 Engine, Deutz TCD2.9L4 (Stage V Pre-Buy) Engine and Deutz TCD2.9L4 (Stage V) Engine Only) (ANSI Export, CE and Japanese Specs)	
245	1001120995	Ref	Decal - ClearSky Telematics Installation	
245A	1001116208	2	Decal - ClearSky	
245B	1001120989	1	Decal - Radio Frequency Device	
253	1001143852	1	Decal - Emissions Compliance (ANSI Export, Australian, CE & UK CA (LRC) Specs)	
262A	1001141300	1	Decal - SkyGuard Override	
262B	1001141302	1	Decal - SkyGuard/Soft Touch Override	
263	1001197408	1	Decal - MSSO	
264	8007508	1	Decal - Sound Power Level (104dB) (Deutz TD2011 Engines)	
264	1705515	1	Decal - Sound Power Level (109dB) (Deutz TD2011 Engines)	
264	1001191526	1	Decal - Sound Power Level (110dB) (Deutz TCD2.9L4 Engines, Deutz TCD2.9L4 (Stage V Pre-Buy) Engines and Deutz TCD2.9L4 (Stage V) Engines)	
267	1001197511	Ref	Decal - Quick Reference (Dutch) (Lomax Rentals)	
267	1001197513	Ref	Decal - Quick Reference (Danish) (Lomax Rentals)	
267	1001180696	Ref	Decal - Quick Reference (English) (Lomax Rentals)	
267	1001197510	Ref	Decal - Quick Reference (French) (Lomax Rentals)	
267	1001197512	Ref	Decal - Quick Reference (German) (Lomax Rentals)	
267	1001197519	Ref	Decal - Quick Reference (Norwegian) (Lomax Rentals)	
267	1001197515	Ref	Decal - Quick Reference (Spanish) (Lomax Rentals)	

SECTION 9 - DECALS

ITEM	PART NUMBER	QTY	DESCRIPTION	REV
267	1001197514	Ref	Decal - Quick Reference (Swedish) (Lomax Rentals)	
274	1001214029	1	Decal Installation - EAC (Russian/CIS Specs)	
274	1001173703	1	Decal - EAC (Russian/CIS Specs)	
280	1001221278	Ref	Decal Installation – Boom Transport Position	
280A	1001220512	1	Decal – Lower Boom	
280B	1001220510	2	Decal – Warning Arrow	
280C	1001220511	2	Decal – Warning Stripe	

FIGURE 9-11. SKYWELDER DECAL INSTALLATION - 50HZ

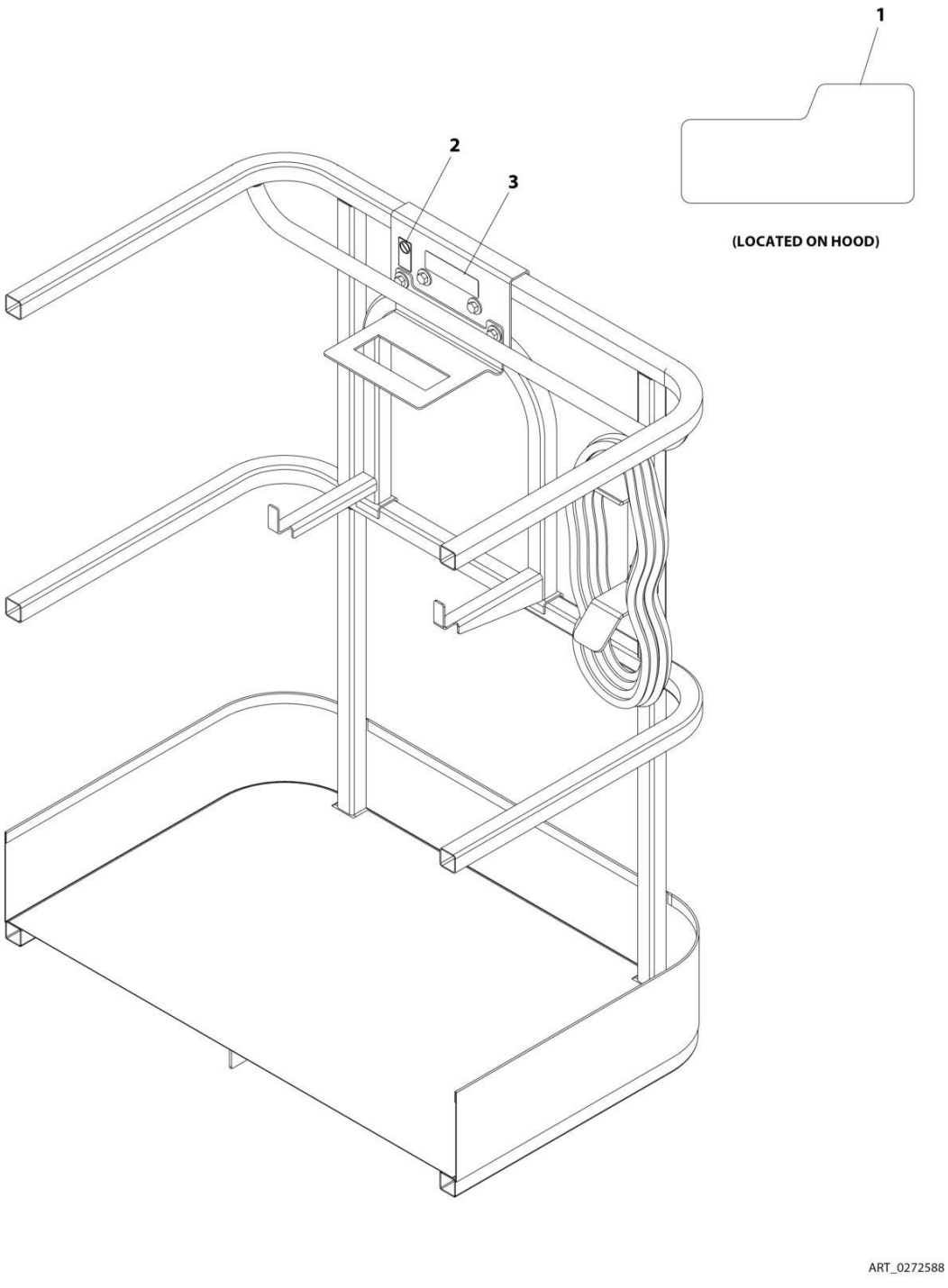

FIGURE 9-11. SKYWELDER DECAL INSTALLATION - 50HZ

ITEM	PART NUMBER	QTY	DESCRIPTION	REV
	0272588	Ref	SKYWELDER DECAL INSTALLATION - 50Hz	B
1	1705355	2	Decal - SkyWelder	
2	1705305	1	Decal - Weld Lead	
3	1001228988	1	Decal - Weight	

FIGURE 9-12. SKYWELDER DECAL INSTALLATION - 60HZ (PVC 2001)

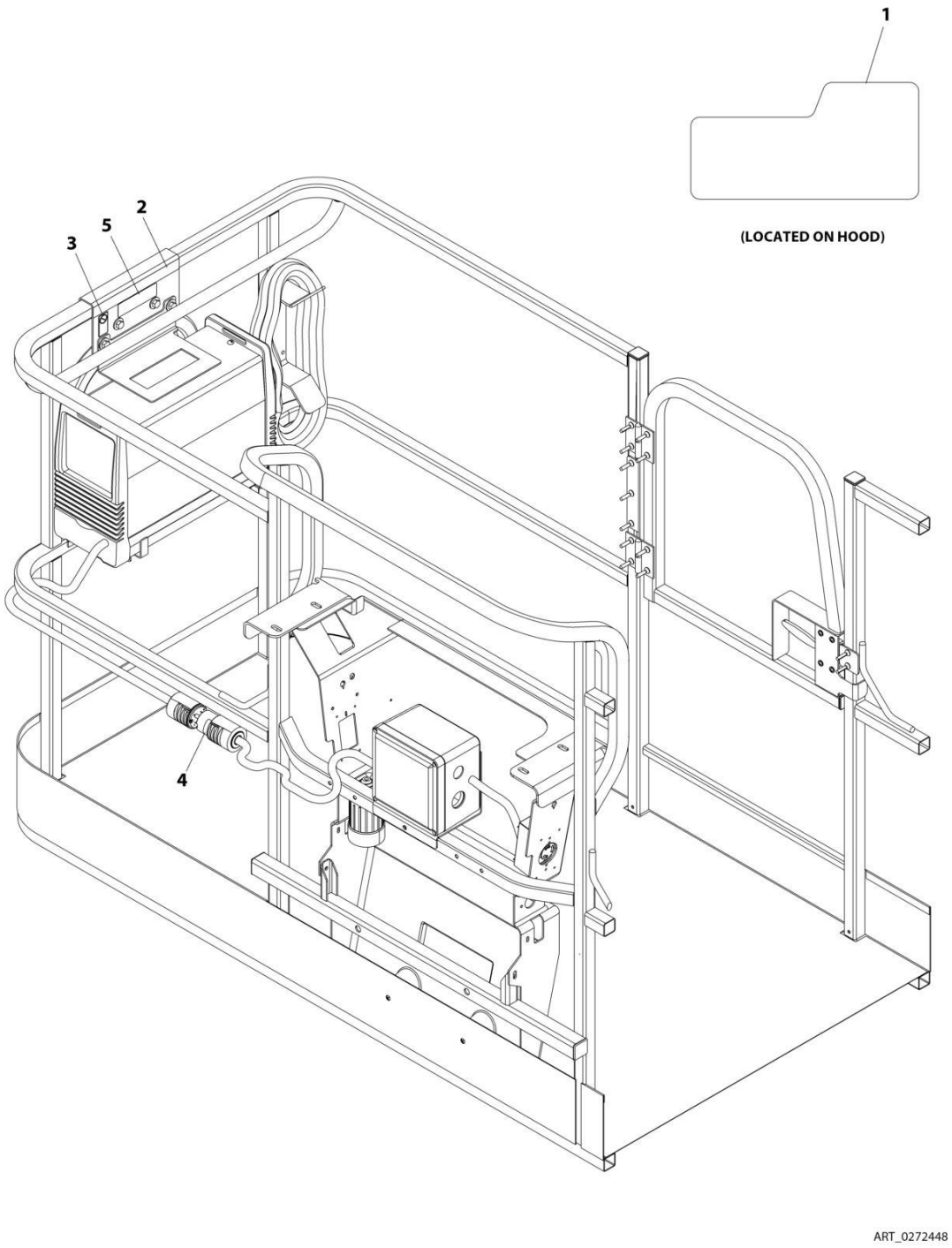

FIGURE 9-12. SKYWELDER DECAL INSTALLATION - 60HZ (PVC 2001)

ITEM	PART NUMBER	QTY	DESCRIPTION	REV
	0272448	Ref	SKYWELDER DECAL INSTALLATION - 60Hz	B
1	1705355	2	Decal - SkyWelder	
2	1702868	1	Decal - No Hands	
3	1705305	1	Decal - Weld Lead	
4	1705375	1	Decal - 240V - 3 Phase - 60Hz	
5	1001228988	1	Decal - Weight	

FIGURE 9-13. SKYWELDER DECAL INSTALLATION - 60HZ (PVC 2007)

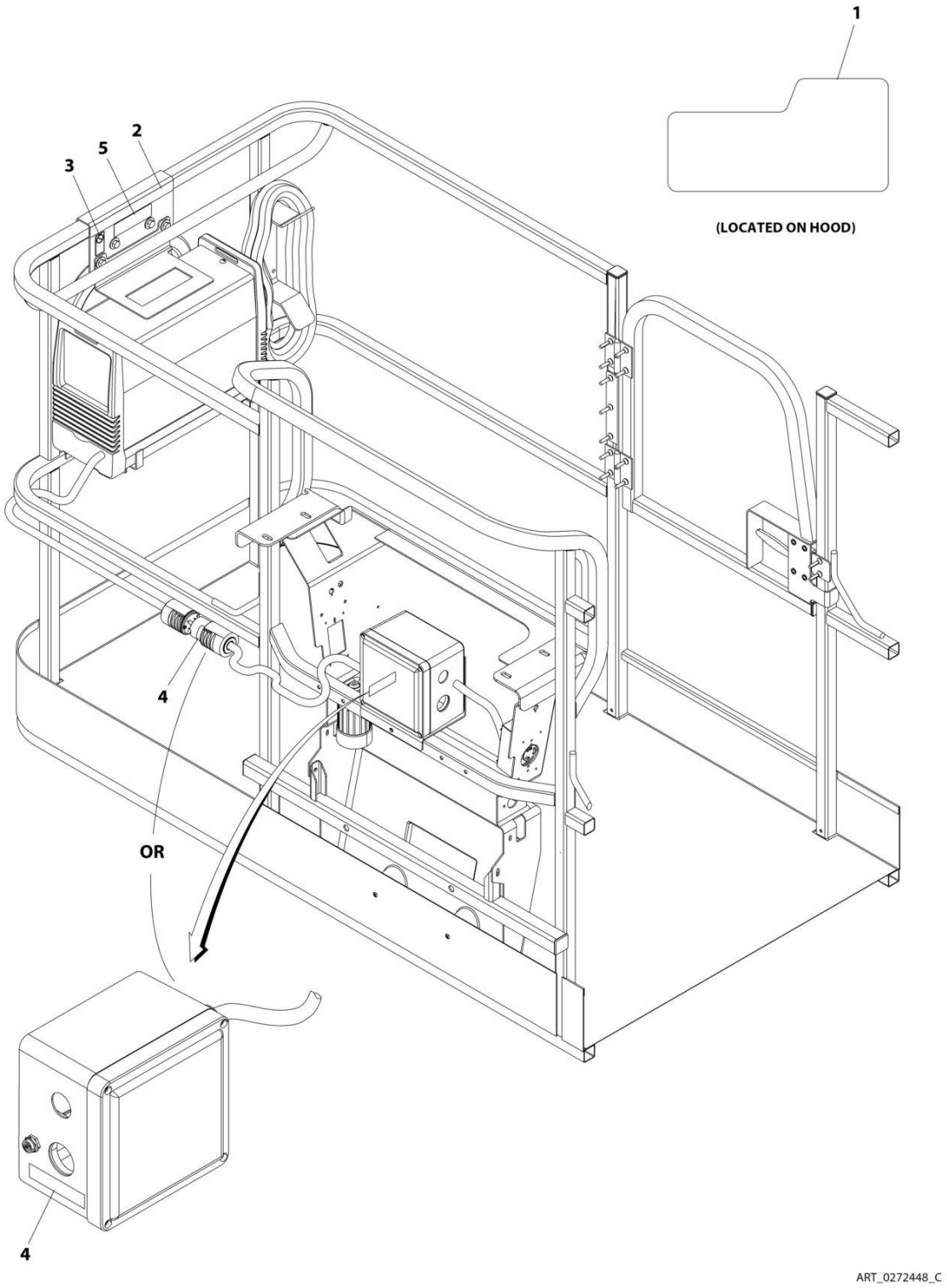

FIGURE 9-13. SKYWELDER DECAL INSTALLATION - 60HZ (PVC 2007)

ITEM	PART NUMBER	QTY	DESCRIPTION	REV
	0272448	Ref	SKYWELDER DECAL INSTALLATION - 60Hz	C
1	1705355	2	Decal - SkyWelder	
2	1702868	1	Decal - No Hands	
3	1705305	1	Decal - Weld Lead	
4	1705375	1	Decal - 240V - 3 Phase - 60Hz	
5	1001228988	1	Decal - Weight	

SECTION 10 - RECOMMENDED SERVICE PARTS STOCK

SECTION 10 - RECOMMENDED SERVICE PARTS STOCK

FIGURE 10-1. RECOMMENDED SERVICE PARTS

ITEM	PART NUMBER	QTY	DESCRIPTION	REV
		Ref	Note: The following list will service one machine (built to current production per date on the front cover) with emergency repair parts which can be installed in the fields. Parts from the list should be replaced when inventory is depleted to keep service parts stock supplied. For further information, contact your JLG dealer or the JLG Industries Parts Department.	
	7024444	1	Breather, Hydraulic (Tanks)	
	4360542	1	Breaker, Circuit (2500w Generator)	
	70001431	1	Breaker, Circuit (Plasma Cutter)	
	4360070	1	Breaker, Circuit 15Amp (4000w & 7500w Generators)	
	7024485	1	Breaker, Circuit 30Amp (7500w 50Hz Generators)	
	70006095	1	Breaker, Circuit 30Amp (7500w 60Hz Generators)	
	1001159118	1	Breaker, GFCI 30Amp (AC Box 240v)	
	1001181045	1	Breaker, Circuit - 30mA/16Amp (Breaker Box Kit 16Amp 2500w & 4000w Generators)	
	1001181046	1	Breaker, Circuit - 30mA/16Amp (Breaker Box Kit 10Amp 2500w Generator)	
	7018991	1	Coil (Steer Valve)	
	7012944	1	Coil (Traction Valve & Platform Valve)	
	7024890	1	Coil (Turntable Valves)	
	70007231	1	Coil (Main Valve)	
	7027207	1	Coil (Main Valve)	
	70007228	1	Coil (Main Valve)	
	7012943	1	Coil (Main Valve)	
	7024571	1	Coil (Platform Valve)	
	7026029	1	Contactor, Rotary Circuit With Harness (Rotary Coupling & Collector Ring)	
	7019680	1	Control, Box (2500w Generator)	
	1001138566	1	Control, Box (4000w Generator)	
	0861538	1	Control, Box (7500w 60Hz Generator)	
	0861572	1	Control, Box (7500w 50Hz Generator)	
	1001166538	1	Controller, Drive/Steer	
	1001166539	1	Controller, Lift/Swing	
	4360407	1	Controller, Speed (Potentiometer) (Platform Console Box)	
	3990001	2	Diode - 3 Amp (Ground Control Harness)	
	70002097	12	Element, Pressure Filter (Control Valve Installation - Platform)	
	2120219	12	Element, High Pressure Filter	
	70002231	12	Element, Pressure Filter	
	2120168	12	Element, Hydraulic Oil Filter	
		Ref	Engine - Deutz TD2011	
	1001202281	12	Filter, Water/Fuel Separator	
	7016328	12	Filter, Fuel	
	7016331	12	Filter, Oil	
	1600443	Ref	Module, EMR2 Controller (ECU) (Note: Not available to order. Please contact JLG Parts Center)	
	3740067	1	Relay	
	3740080	1	Relay	
		Ref	Engine - Deutz TCD2.9L4	
	70024190	12	Element, Air Filter	
	1001225430	12	Filter, Fuel Primary	

ITEM	PART NUMBER	QTY	DESCRIPTION	REV
	1001225431	12	Filter, Fuel Secondary	
	7016331	12	Filter, Oil	
	70023592	2	Fuse, 20A	
	70023593	2	Fuse, 30A	
	70025210	Ref	Module, ECU (Note: Not available to order. Please contact JLG Parts Center)	
	1001117308	1	Relay	
	70005648	1	Relay	
		Ref	Engine - Deutz TCD2.9L4 Stage V	
	70024190	12	Element, Air Filter	
	1001225430	12	Filter, Fuel Primary	
	1001225431	12	Filter, Fuel Secondary	
	7016331	12	Filter, Oil	
	70023592	2	Fuse, 20A	
	70023593	2	Fuse, 30A	
	70025210	Ref	Module, ECU (Note: Not available to order. Please contact JLG Parts Center)	
	1001117308	1	Relay	
	1001196634	2	Fuse, 2A (Breather Heater)	
	8229249	2	Fuse, 3A (USB Charger & Platform Console Box Harness)	
	2400064	2	Fuse, 5A (Clearsky Ready Harness)	
	8229242	2	Fuse, 5A (Engine Harness & Ground Control Box Harness)	
	80983191	2	Fuse, 10A (Engine Harness)	
	2400065	2	Fuse, 30A (Chassis Power Distribution Harness & Ground Control Box Harness)	
	2860030	1	Key, Replacement	
	2940074	1	Latch, Platform	
	1001247468	1	Loadcell (Platform Support)	
	1001281100	1	Module, Ground Control	
	1001142683	1	Module, Beacon Control (Red & Blue Beacons)	
	3740067	1	Relay (Battery & Aux Pump)	
	3740049	1	Relay (Ground Control Box)	
	3740080	1	Relay (2500w Generator & Chassis Power Distribution Harness)	
	70006553	1	Relay (4000w Generator)	
	1001186431	1	Relay (SkyGuard Bar Options)	
	3740143	1	Relay (Relay Harness)	
	3740086	1	Relay (SkyLine Options)	
	1001147479	1	Switch, Digital Angle Sensor (Boom Sensors & Switches)	
	1001228225	1	Sensor, Emitter (SkyEye)	
	4360578	1	Sensor, Limit (Axle)	
	4360057	1	Sensor, Limit (Soft Touch)	
	4360579	1	Sensor, Limit (Tower Boom Transport Length Switch Harness)	
	4360548	1	Sensor, Plunger (Boom Sensors & Switches)	
	70000803	1	Sensor, Pressure Switch (Traction Valve)	
	1001253593	1	Sensor, Pressure Transducer (Boom & Cylinder Install)	
	7026031	1	Sensor, Proximity (Rotary Coupling & Collector Ring)	
	1001232667	1	Sensor, Proximity (SkyLine)	
	4000008	1	Sensor, Proximity Assembly (Boom Sensors & Switches)	
	1001228224	1	Sensor, Receiver (SkyEye)	
	4360505	1	Sensor, Rotary Angle (Steer & Boom Sensors & Switches)	
	1001137673	1	Sensor, SkyGuard Bar	
	7027738	1	Sensor, Thermostatic (Main Valve)	

SECTION 10 - RECOMMENDED SERVICE PARTS STOCK

ITEM	PART NUMBER	QTY	DESCRIPTION	REV
	1001219601	1	Sensor, Tilt Dual Axis CAN (Ground Control Box Assembly)	
	1001225346	1	Switch, Battery Disconnect	
	1001117172	1	Switch, Foot	
	4360469	1	Switch, Key	
	4360274	1	Switch, Pushbutton Gray (Ground Control Box)	
	4360387	1	Switch, Pushbutton Yellow (Console Box, Soft Touch & Ground control Box)	
	4360475	1	Switch, Push-Pull Emergency Stop	
	70001432	1	Switch, Rocker (Plasma Cutter)	
	4360328	1	Switch, Toggle (Ground Control Assembly & Tower Lift Switch)	
	1001155045	1	Switch, Toggle (Platform Console Box)	
	1001159256	1	Switch, Toggle (Platform Console Box)	
	1001161709	1	Switch, Toggle (Platform Console Box)	
	1001161710	1	Switch, Toggle (Platform Console Box)	
	4360336	1	Switch, Toggle (Generators)	

SECTION 11 - SPECIAL OPTIONS/ACCESSORIES/KITS

SECTION 11 - SPECIAL OPTIONS/ACCESSORIES/KITS

FIGURE 11-1. SPECIAL OPTIONS/ACCESSORIES/KITS

ITEM	PART NUMBER	QTY	DESCRIPTION	REV
		Ref	Note: This is to accommodate machines ordered with special equipment. Options may not be applicable to all models. For more specific parts information contact JLG Parts Department.	
	1001108504	Ref	Additional Transport Tie Down (ANSI Specs)	
	1340067	Ref	Air Cleaner Pre-Cleaner	
	0273464	Ref	Airline Installation, 1/2 in	
	1001202697	Ref	Air Intake Shut-off Valve (Deutz TCD2.9L4 Engines)	
	1001288636	Ref	Axle Lockout Cylinder Kit (Replacement for 1001228019)	
	1001241275	Ref	Axle Wear Pad Kit	
	0271803	Ref	Bellows, Cylinder (Fixed Axle)	
	0271804	Ref	Bellows, Cylinder (Oscillating Axle)	
	0273471	Ref	Bellows, Cylinder (Boom)	
	1001306146	Ref	Boom Angle Sensor Kit	
	0273513	Ref	Boom Wipers Installation	
	1001233047	Ref	Breather Heater (Deutz TCD2’9L4 Engines)	
		Ref	ClearSky (Telematics) Installations (Dealer Installed)	
	1001242192	Ref	ClearSky (Telematics) Access Control Installation Kit (ANSI, ANSI Export and CSA Specs)	
	1001243183	Ref	ClearSky (Telematics) Add-on Kit (ANSI, ANSI Export and CSA Specs)	
	1001243184	Ref	ClearSky (Telematics) Add-on Kit (CE & UK CA Specs)	
	1001276923	Ref	ClearSky (Telematics) Add-on Kit (Contact JLG for Approved Countries)	
	1001119938	Ref	ClearSky Telematics (ANSI Spec)	
	1001246142	Ref	ClearSky Telematics (Australian Spec)	
	1001119946	Ref	ClearSky Telematics (CSA Spec)	
		Ref	ClearSky Telematics (Factory Installed)	
	1001227449	Ref	Canbus Connection (ANSI and CSA Specs)	
	1001228953	Ref	Canbus Connection (ANSI Export and CE & UK CA Specs)	
	1001246138	Ref	Canbus Connection (Australian Specs)	
	1001276610	Ref	3 Wire Connection (All Specs)	
	0273862	Ref	Cold Weather Package (110V)	
	1001235617	Ref	Cold Weather Package (Deutz TCD2.9L4 Engines)	
	1001271731	Ref	Cold Weather Package (Deutz TCD2.9L4 (Stage V) Engines)	
	0274885	Ref	Cold Weather Transformer Installation	
	0272621	Ref	Control System Analyzer Installation	
	1001251329	Ref	Counterbalance Valve Replacement Kit	
	1001213183	Ref	Cribbing Enable Installation (ANSI Spec Only)	
		Ref	Decal Installations	
	0257195	Ref	Decal - Government Warranty Decal	
	1001270520	Ref	Decal Kit - Machine (ANSI Spec)	
	1001272202	Ref	Decal Kit - Platform (ANSI Spec)	
	1001272090	Ref	Decal Kit - Platform Console Box (ANSI Spec)	
	2902356	Ref	Decal Kit - Tire Load	
		Ref	Electrical Connector Kits	
	1001148902	Ref	Amp/Tyco Electrical Connector Kit	
	1001148903	Ref	Deutsch DT Electrical Connector Kit	
	1001148904	Ref	Deutsch HD Electrical Connector Kit	
	1001148905	Ref	Packard Electrical Connector Kit	

ITEM	PART NUMBER	QTY	DESCRIPTION	REV
	1001148906	Ref	Various Electrical Connectors Kit	
	1001109621	Ref	Exhaust Raincap Installation	
	1120423	Ref	Raincap	
	1001109619	Ref	Tube, Exhaust Stack	
	1001237883	Ref	Fall Arrest Bolt on Kit (6FT x 1.83M) (ANSI, ANSI Export, China, CSA, and Japanese Specs) (Fits Platform p/ns 1001186384 & 1001228376)	
	1001237882	Ref	Fall Arrest Bolt on Kit (8FT x 2.44M) (ANSI, ANSI Export, China, CSA, and Japanese Specs) (Fits Platform p/ns 1001186383)	
	1001206794	Ref	Fan and Belt Grille Add-on Kit (Deutz D2011 Engines Only)	
	1001206796	Ref	Fan and Belt Grille Add-on Kit (Deutz TCD2.9L4 Engines Only)	
	1001202076	Ref	Fan and Belt Guard (Deutz TD2011 Engines)	
	1001202221	Ref	Fan and Belt Guard (Deutz TCD2.9L4 Engines, Deutz TCD2.9L4 (Stage V Pre-Buy) Engines and Deutz TCD2.9L4 (Stage V) Engines)	
	1001145708	Ref	Fan Guard Installation (Deutz TCD 2.9L4 Engines, Deutz TCD2.9L4 (Stage V Pre-Buy) Engines and Deutz TCD2.9L4 (Stage V) Engines Only)	
		Ref	Filter Kits	
		Ref	Deutz TD 2011 Engines	
	1001137028	Ref	Filter Kit (Service), Combined, Filter B-C45	
		Ref	Deutz TCD 2.9L4 Engines	
	1001225648	Ref	Filter Kit (Service), Combined, Filter B-C	
	1001204046	Ref	Engine - Water/Fuel Filter	
	1001139099	Ref	Fire Extinguisher Installation	
	1001237831	Ref	Fire Protection	
	1001274830	Ref	Floor Mat Add-on Kit (36x72 Platform) (Dealer Installed)	
	1001274829	Ref	Floor Mat Add-on Kit (36x96 Platform) (Dealer Installed)	
	1001117294	Ref	Foot Switch Shield (With Cold Weather Plus Package)	
	1001191395	Ref	Fuel Cap Cover, Lockable (Green)	
	1001202749	Ref	Fuel Cap Cover, Lockable (Black)	
	1001103286	Ref	Generator Hourmeter Installation	
	1001277849	Ref	GM to UGM2 Retrofit Ultra1 Kit	
	0273502	Ref	Headlight and Taillights Installation	
		Ref	Hose Kits	
	1001193806	Ref	Hose Kit - Boom Only	
	1001204898	Ref	Hose Kit - Platform Valve	
	1001241418	Ref	Hostile Environment Kit	
	0273503	Ref	Illumination Lights Installation	
	1001148971	Ref	Lanyard (Bolt-on) Installation Kit	
	1001236951	Ref	Low Temperature Cutout Installation (Russian Specs)	
	1001272166	Ref	Pipe Rack Kit	
	1001195304	Ref	Platform Console Cover Kit (Clear Polycarbonate)	
	1580013	Ref	Platform Corner Storage Tray	
		Ref	Platform Entry Kits	
	1001142504	Ref	Drop Bar (Replacing Swing Gate with Drop Bar)	
	1001142505	Ref	Swing Gate (Replacing Drop Bar with Swing Gate)	
	0273466	Ref	Platform Floodlights Installation	
	1001172045	Ref	Platform Ladder Carrier Installation (30in and 36 in Platform)	
	2910351	Ref	Platform Level Cylinder Replacement Kit	
		Ref	Platform Mesh (Steel) to Mid Rail Installations (ANSI, ANSI Export, Australian and CSA Specs)	

SECTION 11 - SPECIAL OPTIONS/ACCESSORIES/KITS

ITEM	PART NUMBER	QTY	DESCRIPTION	REV
	1001271760	Ref	Platform Mesh (Steel) to Mid Rail Installation (Side Entry Platform) - 36in x 6ft (91.5cm x 1.83m) Platforms	
	1001266284	Ref	Platform Mesh (Nylon) to Mid Rail Installation (Side Entry Platform) - 36in x 6ft (91.5cm x 1.83m) Platforms	
	1001269389	Ref	Platform Mesh (Steel) to Mid Rail Installation (Side Entry Platform) - 36in x 8ft (91.5cm x 2.44m) Platforms	
	1001266098	Ref	Platform Mesh (Nylon) to Mid Rail Installation (Side Entry Platform) - 36in x 8ft (91.5cm x 2.44m) Platforms	
	1001214540	Ref	Platform Mesh (Steel) to Top Rail Add-On Kit - 36in x 8ft (91.5cm x 2.44m) with Gate	
	1001214548	Ref	Platform Mesh (Steel) to Top Rail Add-On Kit - 36in x 6ft (91.5cm x 1.83m) with Gate	
		Ref	Platform Mesh (Steel) to Top Rail (ANSI, ANSI Export and CSA Specs)	
	1001271642	Ref	Platform Mesh (Steel) to Top Rail Installation (Side Entry Platform) - 36in x 6ft (91.5cm x 1.83m) Platforms	
	1001266489	Ref	Platform Mesh (Nylon) to Top Rail Installation (Side Entry Platform) - 36in x 6ft (91.5cm x 1.83m) Platforms	
	1001269187	Ref	Platform Mesh (Steel) to Top Rail Installation (Side Entry Platform) - 36in x 8ft (91.5cm x 2.44m) Platforms	
	1001266056	Ref	Platform Mesh (Nylon) to Top Rail Installation (Side Entry Platform) - 36in x 8ft (91.5cm x 2.44m) Platforms	
	1001214561	Ref	Platform Mesh (Steel) to Top Rail Add-On Kit - 36in x 8ft (91.5cm x 2.44m) with Gate	
	1001214562	Ref	Platform Mesh (Steel) to Top Rail Add-On Kit - 36in x 6ft (91.5cm x 1.83m) with Gate	
	1001149730	Ref	Platform Mid Rail Repair Kit	
	1001269136	Ref	Platform Portable Worklights	
		Ref	Platform Rail Extensions	
	0272733	Ref	Platform Rail Extensions - 6ft Platform	
	0272725	Ref	Platform Rail Extensions - 8ft Platform	
	0273465	Ref	Platform Worklights Installation	
	1001209059	Ref	Platform Work Surface Installation	
	1001190892	Ref	Service Tools & Kits	R
	1001247073	Ref	Skyeye Retrofit Kit	
	1001241547	Ref	SkyEye Housing Repair Kit (LH)	
	1001241548	Ref	SkyEye Housing Repair Kit (RH)	
		Ref	SkyGuard Component Options:	
	1001209481	Ref	SkyGuard Complete Add-On Kit (Blue Beacon)	
	1001210029	Ref	SkyGuard Complete Add-On Kit (Red Beacon)	
	1001250035	Ref	SkyGuard Platform Sensor Kit	
	1001249052	Ref	SkyGuard Retrofit Kit	
	1001206544	Ref	SkyGuard Strobe Light Kit (Blue Beacon)	
	1001250595	Ref	SkyGuard 6-Pin Retrofit Installation Kit	
	1001262016	Ref	SkyLine Kit (Dealer Installed)	
	1001250465	Ref	SkySense/Enhanced Detection System (EDS) Level 1 (2-Bar) Installation (Factory Installed)	
	1001252033	Ref	SkySense/Enhanced Detection System (EDS) Level 1 (2-Bar) Add-on Kit (Dealer Installed)	
	1001250466	Ref	SkySense/Enhanced Detection System (EDS) Level 2 (3-Bar) Add-on Kit (Dealer Installed) SkySense/Enhanced Detection System (EDS) Level 2 (3-Bar) Installation (Factory Installed)	
	1001252034	Ref	SkySense/Enhanced Detection System (EDS) Level 2 (3-Bar) Add-on Kit (Dealer Installed) SkySense/Enhanced Detection System (EDS) Level 2 (3-Bar) Add-on Kit (Dealer Installed)	

ITEM	PART NUMBER	QTY	DESCRIPTION	REV
	1001253618	Ref	SkySense Module Kit (EDS) Level 1 (2-Bar) (Dealer Installed)	
	1001253619	Ref	SkySense Module Kit (EDS) Level 2 (3-Bar) (Dealer Installed)	
	1001231235	Ref	SkyWelder Locking Bracket	
		Ref	Tools For Service	
	2901443	Ref	Analyzer Kit	
	1001249695	Ref	Analyzer, Machine System with Cable	
	1001249941	Ref	Analyzer, Machine System with Cable (Battery Powered)	
	3128444	Ref	CD, Troubleshooting	
	7002821	Ref	Crimper, Wire	
	7002823	Ref	Pin Extractor - Universal (For Electrical Connectors with Pins and Sockets)	
	4460467	Ref	Extractor - 16-18 Gauge (For Removal of Pin/Sockets from Deutsch Connectors)	
	4460510	Ref	Extractor - 12-14 Gauge (For Removal of Pin/Sockets from Deutsch Connectors)	
	7016654	Ref	Screwdriver, Magnetic	
	7002822	Ref	Screwdriver, Pontiometer	
	7004275	Ref	Seal Tool 1 in (For Cylinders)	
	7004276	Ref	Seal Tool 1-1/2 in (For Cylinders)	
	7002828	Ref	Stripper, Wire	
	7016655	Ref	Wire Rope Sheave Gauge	
	1001106846	Ref	Sleeve, Cylinder Head Installation (Tower Lift Cylinder)	
	1001106847	Ref	Sleeve, Cylinder Piston Installation (Tower Lift Cylinder)	
	1001106848	Ref	Gauge, Go - No Go (Tower Lift Cylinder)	
	1001107000	Ref	Sleeve, Cylinder Head Installation (Main Lift Cylinder)	
	1001107001	Ref	Sleeve, Cylinder Piston Installation (Main Lift Cylinder)	
	1001107002	Ref	Gauge, Go - No Go (Main Lift Cylinder)	
	1001107143	Ref	Sleeve, Cylinder Head Installation (Tower Telescope Cylinder)	
	1001107145	Ref	Sleeve, Cylinder Piston Installation (Tower Telescope Cylinder)	
	1001107146	Ref	Gauge, Go - No Go (Tower Telescope Cylinder)	
	1001107147	Ref	Gauge, Go - No Go (Tower Telescope Cylinder)	
	1001137005	Ref	Software Cable Kit (Service Kit)	
	70004185	Ref	Torque Multiplier	
	70004646	Ref	Puller	
	70004647	Ref	Seal Tool for Lifetine Seal Assembly	
	70004648	Ref	Puller for Brade Disassembly	
	1001265327	Ref	Tower Stow Sensor/Indicator Add-on Kit (Dealer Installed)	
	2915072	Ref	Turntable Bearing Kit	
	1001277844	Ref	UGM2 Retrofit Ultra1 Kit	
	1001274249	Ref	USB Charger Add-on Kit (Dealer Installed)	
	1001262959	Ref	Voltage Regulator Relocatio Kit (ClearSky)	
	1001119136	Ref	Wear Pad Kit (Includes Wear Pads, Shims and Hardware)	
	0273467	Ref	Weld Leads at Platform Installation	
	1001277222	Ref	White Noise Alarm Kit	
	1001277191	Ref	White Noise Ambient Alarm Kit	

PART NUMBER INDEX

SECTION 11 - SPECIAL OPTIONS/ACCESSORIES/KITS

0080237 ..... 191, 215
0080244 .199, 207, 223, 231
0080277 ..... 29, 411
0100009 ..... 449, 453
0100011 ..19, 23, 29, 36, 45, 51, 55, 61, 63, 75, 81, 83, 87, 97, 99, 101, 103, 105, 107, 109, 111, 113, 115, 117, 119, 121, 122, 125, 126, 129, 130, 133, 134, 137, 138, 141, 142, 145, 146, 149, 150, 174, 175, 178, 179, 182, 183, 187, 191, 195, 199, 203, 207, 211, 215, 219, 223, 227, 231, 239, 243, 247, 251, 255, 258, 263, 267, 271, 275, 279, 282, 291, 295, 297, 301, 304, 337, 345, 349, 353, 355, 359, 363, 367, 371, 375, 379, 383, 388, 392, 396, 403, 406, 410, 413, 415, 425, 427, 429, 435, 437, 439, 441, 471, 473, 477, 479, 481, 508, 513, 515, 517, 531, 535, 539, 541, 545, 595, 597, 635, 639
0100019 ..19, 23, 27, 29, 31, 69, 71, 355, 359, 363, 367, 371, 375, 379, 383, 392, 396, 535, 545
0100020 248, 258, 272, 282, 304, 349, 355, 364, 371, 467, 505, 508, 599, 601, 603, 605, 607, 609, 611, 613, 615, 617, 619, 621, 623, 625, 627, 629
0100035 ..29, 163, 410, 449, 453, 457
0100038 531, 535, 539, 541, 545
0100048 ..85, 159, 161, 349, 355, 359, 364, 368, 371, 375, 449, 453, 669, 783, 785, 789
0100062 248, 260, 272, 284, 304
0100079 ..87, 187, 195, 203, 211, 219, 227, 239, 251, 263, 275, 291, 297, 341
0100081 ..87, 174, 175, 179, 183, 403, 406, 483, 485, 487, 489, 491, 493, 495, 497, 499, 501, 503
0140001 55
0140011 ..... 449, 453
0140032 157
0200048 .....477, 479, 481
0200742 345
0200833 ..... 29, 411
0236768 ..... 61, 63
0239842 73
0257195 816
0257887 157
0259666 153
0271520 29
0271803 816
0271804 816
0271852 41
0271874 75
0272055 41
0272056 41
0272060 192, 199, 207, 216, 223, 231
0272080 89
0272254 515
0272418 483, 485, 487, 489, 491, 493, 495, 497, 499, 501, 503
0272427 481
0272435 ..... 364, 372
0272448 ..... 807, 809
0272521 513
0272588 805
0272589 ..... 368, 376
0272621 816
0272725 818
0272733 818
0272948 495
0272949 489
0272950 491
0272951 485
0272952 493
0273121 410
0273349 ..... 81, 83
0273350 174
0273353 508
0273360 403
0273361 406
0273395 169
0273401 87
0273404 503
0273405 499
0273406 497
0273446 465
0273447 157
0273451 71
0273461 635
0273462 595
0273463 597
0273464 816
0273465 818
0273466 817
0273467 819
0273471 816
0273474 651
0273475 653
0273476 659
0273502 817
0273503 817
0273513 816
0273824 477
0273862 816
0274106 27
0274730 801
0274885 816
0275216 ..... 601, 731
0275217 ..... 607, 735
0275452 ..... 613, 739
0275453 ..... 619, 743
0275454 ..... 625, 747
0340003 191, 199, 207, 215, 223, 231
0340051 191, 199, 207, 215, 223, 231
0363037 ..... 19, 23
0363062 ..... 61, 63
0363076 19
0363081 345
0363082 345
0363224 410
0400020 ..... 61, 63
0440251 71
0440273 ..... 379, 383
0480127 345
0480128 ..... 349, 363
0480129 367
0561380 ..... 379, 383
0561533 388
0561547 ..... 379, 383
0630407 122, 126, 130, 134, 138, 142, 146, 150
0630462 ..... 477, 479, 481
0630464 ..29, 121, 125, 129, 133, 137, 141, 145, 149, 410
0630518 155, 457, 505, 508, 513, 515, 517
0630534 541
0630535 .531, 535, 549, 551
0630537 539
0630539 403
0630548 121, 125, 129, 133, 137, 141, 145, 149
0630558 ..... 392, 396
0630568 ..... 450, 454
0630593 403
0641404 ..63, 349, 353, 355, 359, 363, 367, 371, 375, 449, 453, 473
0641405 410, 473, 595, 597, 635, 637, 639
0641406 ..55, 121, 125, 129, 133, 137, 141, 145, 149, 159, 178, 182, 191, 199, 207, 215, 223, 231, 246, 258, 270, 282, 304, 345, 359, 406, 443, 445, 447, 637, 639, 783, 785, 787, 789, 791, 793, 795, 797, 799
0641407 ..... 161, 306, 353
0641408 55, 61, 63, 87, 165, 167, 174, 178, 182, 239, 251, 263, 275, 291, 297, 445, 447, 669
0641410 187, 195, 203, 211, 219, 227, 239, 251, 263, 275, 291, 297
0641412 51
0641413 63
0641414 449, 453, 471, 477, 479, 481
0641416 599, 601, 603, 605, 607, 609, 611, 613, 615, 617, 619, 621, 623, 625, 627, 629
0641418 425, 427, 429, 435, 437, 439, 441
0641424 45
0641503 248, 260, 272, 284, 304
0641504 45
0641505 ..... 29, 410
0641506.. 81, 157, 174, 175, 179, 183, 191, 199, 207, 215, 223, 231
0641507 191, 199, 207, 215, 223, 231, 415
0641508.. 87, 246, 258, 270, 282, 304, 345
0641509.. 45, 171, 187, 195, 203, 211, 219, 227
0641510 179, 183, 248, 260, 272, 284
0641511.. 29, 187, 195, 203, 211, 219, 227, 239, 251, 263, 275, 291, 297
0641516 349, 355, 363, 367, 371, 375
0641520 ..... 89, 91, 93, 95
0641604 ..... 87, 388
0641605 187, 191, 195, 199, 203, 207, 211, 215, 219, 223, 227, 231, 239, 251, 263, 275, 291, 297, 406
0641606.... 19, 23, 174, 178, 182, 187, 195, 203, 212, 220, 228, 239, 246, 251, 258, 263, 270, 275, 282, 291, 297, 304, 403, 406, 508, 513, 515, 517, 549, 551
0641607 61, 63, 97, 99, 101, 103, 105, 107, 109, 111, 113, 115, 117, 119, 392, 396, 549, 551
0641608.. 19, 23, 45, 55, 75, 89, 91, 169, 171, 174, 178, 182, 191, 199, 207, 215, 223, 231, 239, 246, 251, 258, 263, 267, 270, 275, 279, 282, 291, 297, 301, 304, 345, 379, 383
0641609.... 19, 23, 191, 199, 207, 215, 223, 231
0641610 174, 178, 182, 187, 191, 195, 199, 203, 207, 211, 215, 219, 223, 227, 231, 239, 246, 251, 258, 263, 270, 275, 282, 291, 297, 304, 341, 345, 392, 396, 445, 447
0641611..... 19, 23, 263, 337
0641612. 248, 260, 272, 284
0641613..... 19, 23, 379, 383
0641615 87
0641616 ..... 349, 353
0641618 355, 359, 364, 368, 371, 375
0641620 55
0641622 388
0641626 406
0641628 403
0641630 ..... 174, 178, 182
0641634 29
0641636 ..... 55, 407

0641638 406
0641644 406
0641652 403
0641706 246, 258, 270, 282, 304
0641708 246, 258, 270, 282, 304
0641718 345
0641806 187, 195, 203, 211, 219, 227, 240, 252, 264, 276, 291, 297
0641808 ..... 19, 23, 45, 187, 191, 195, 199, 203, 207, 211, 215, 219, 223, 227, 231, 239, 251, 263, 275, 291, 297, 392, 396
0641809 388, 392, 396, 403, 406
0641810 349, 353, 355, 359, 363, 367, 371, 375, 388, 392, 396
0641812 .... 81, 83, 191, 199, 207, 243, 255, 267, 279, 295, 301
0641813 ..... 392, 396
0641814 .. 20, 215, 223, 231, 243, 255, 267, 279, 295, 301
0641816 171
0641818 169, 191, 199, 207, 215, 223, 231
0642010 187, 195, 203, 211, 219, 227, 239, 251, 263, 275, 291, 297, 392, 396
0642012 483, 485, 487, 489, 491, 493, 495, 497, 499, 501, 503
0642016 29
0642020 23
0642212 379, 383, 483, 485, 487, 489, 491, 493, 495, 497, 499, 501, 503
0642214 ..... 19, 23
0642616 ..... 379, 383
0642624 ..... 379, 383
0651606 187, 195, 203, 211, 219, 227, 240, 252, 264, 276, 291, 297
0681608 413
0681620 ..... 521, 523, 525
0681813 ..... 19, 23
0681814 ..... 19, 23, 431, 433
0681815 ..... 19, 23
0681816 ..... 19, 23
0681822 ..... 431, 433
0682014 ..... 393, 397
0682016 ..... 379, 383
0682026 71
0682028 246, 258, 270, 282, 304, 392, 396
0682040 71
0682048 ..... 379, 383
0682212 ..... 392, 396
0682422 69
0682424 ..... 521, 523, 525
0700408 599, 601, 603, 605, 607, 609, 611, 613, 615, 617, 619, 621, 623, 625, 627, 629
0700615 ..... 165, 167
0700812 .248, 260, 272, 284
0700815 246, 258, 270, 282, 304
0701418 345
0701617 31
0701619 ..... 41, 43
0711214 191, 199, 207, 215, 223, 231
0711417 .199, 207, 223, 231
0720804 ..... 449, 453
0721003 411
0721005 481
0721006 ..... 337, 449, 453
0731005 ..... 477, 479
0731007 87
0741606 29
0741607 349, 353, 355, 359, 371, 375
0741806 ..... 392, 396
0742210 ..... 379, 383
0760608 ..... 175, 179, 183
0760612 121, 125, 130, 134, 138, 142, 146, 150
0760808 306
0760810 248, 260, 272, 284, 413
0760812 ..... 406, 645
0761014 413
0761015 ..... 379, 383
0761210 239, 251, 263, 275, 291, 297
0761212 306
0761214 ..36, 248, 260, 272, 284, 304
0761215 216, 223, 232, 267, 279, 301
0761216 413
0771212 246, 258, 270, 282, 304
0771414 191, 199, 207, 215, 223, 231, 246, 258, 270, 282, 304
0791410 51
0791504 410
0791506 410
0791510 406
0791604 ..... 51, 410
0791605 .174, 178, 182, 410
0791606 ..... 392, 396, 410
0791607 51
0791608 ..... 406, 410
0791610 406
0791616 406
0791618 406
0791622 406
0791808 ..... 403, 406
0791810 410
0801365 388
0801366 388
0801367 388
0801369 ..... 392, 396
0801370 ..... 379, 383, 388
0801371 ..... 379, 392
0801497 ..... 392, 396
0801550 ..... 393, 397
0811606 . 388, 392, 396, 406
0811607 ..... 388, 392, 396
0840062 715
0860038 349, 355, 363, 371, 595, 597
0861538 ..... 363, 371, 812
0861572 ..... 367, 375, 812
0861731 599, 617, 623, 629, 739, 741, 743, 745, 747, 749
0861781 605, 611, 731, 733, 735, 737
0861880 . 661, 663, 665, 667
0902746 ..... 175, 179, 183
0902761 ..... 175, 179, 183
0902762 ..... 175, 179, 183
0902763 ..... 175, 179, 183
0902800 55
0902813 345
0902888 349, 355, 363, 367, 371, 375
0902915 ..... 81, 83
0902932 406
0902965 407
0903154 ..... 174, 178, 182
0903161 ..... 175, 179, 183
0903162 ..... 175, 179, 183
0903696 ..... 61, 63
0940070 191, 199, 207, 215, 223, 231, 246, 258, 270, 282, 304
0940092 ..... 477, 479, 481
0940094 ..... 477, 479, 481
0940102 483, 485, 487, 489, 491, 493, 495, 497, 499, 501, 503
0940103 481
0940134 477
0940177 479
0961845 425, 427, 429, 435, 437, 439, 441
0961893 541
0961896 531
0961897 ..... 535, 549, 551
0961901 539
0961949 ..... 535, 545, 547
0961950 . 531, 533, 545, 547
0961951 ..... 392, 396, 551
0961986 191, 199, 207, 215, 223, 231, 246, 258, 270, 282, 304
0962033 ..... 19, 23, 379, 383
0962051 ..... 169, 171
0962122 ..... 379, 383
0962224 ..... 393, 397
0962257 ..... 541, 543, 549
0962270 ..... 431, 433
0962297 379, 383, 388, 537, 539
0962423 29
0962520 349, 353, 355, 359, 363, 367, 371, 375
0962552 539
0962556 ..... 393, 397
0962561 535
1001003498 697
1001091102 ..353, 359, 637, 639
1001091969 601
1001091970 607
1001091973 613
1001091974 619
1001091975 625
1001092764 591
1001094055 801
1001096070 667
1001096076 697
1001096163 639
1001096172 ..353, 359, 637, 639
1001097051 775
1001097150 ...661, 663, 667
1001097244 475
1001097820 ..... 556, 560
1001098012 ...505, 508, 511
1001098027 556
1001098122 467
1001098149 505
1001098513 ..... 188, 191
1001098518 195
1001098519 187
1001098520 203
1001098530 ..... 196, 199
1001098531 ..... 204, 207
1001098601 ..191, 200, 208, 215, 224, 232, 235
1001098828 413
1001099366 ..483, 485, 487, 489, 491, 493, 495, 497, 499, 501, 503
1001099367 ..483, 485, 487, 489, 491, 493, 495, 497, 499, 501, 503
1001099421 495
1001099422 485
1001099632 29
1001100231 663
1001100326 603
1001100327 609
1001100331 615
1001100333 621
1001100337 627
1001100341 ...603, 731, 733
1001100342 ...609, 735, 737
1001100345 ...615, 739, 741
1001100346 ...627, 747, 749
1001100347 ...621, 743, 745
1001101191 ..599, 601, 603, 605, 607, 609, 611, 613, 615, 617, 619, 621, 623, 625, 627, 629, 661, 663, 665
1001101196 ..601, 603, 605, 607, 609, 611
1001101197 ..599, 613, 615, 617, 619, 621, 623, 625, 627, 629
1001101421 483
1001101422 483
1001101550 35

SECTION 11 - SPECIAL OPTIONS/ACCESSORIES/KITS

1001103012..... 673
1001103286..... 817
1001103977..... 589
1001104315..... 31, 33
1001104324..... 31
1001104325..... 33, 35
1001104498..... 673
1001104519..... 721
1001104577..... 589
1001106475..... 392, 396
1001106476..... 392, 396
1001106483..... 392, 396
1001106736..... 673, 675
1001106846..... 819
1001106847..... 819
1001106848..... 819
1001107000..... 819
1001107001..... 819
1001107002..... 819
1001107143..... 819
1001107145..... 819
1001107146..... 819
1001107147..... 819
1001107854..... 673
1001107971..... 212, 215
1001107972..... 211
1001107973..... 220, 223
1001107974..... 219
1001107975..... 228, 231
1001107976..... 227
1001108256..... 479
1001108504..... 816
1001108616...216, 224, 233, 267, 279, 301, 326
1001108617...187, 195, 203, 211, 219, 227, 239, 251, 263, 275, 291, 297
1001109438..... 588
1001109439..... 588
1001109465..... 588
1001109468..... 588
1001109470..... 588
1001109471..... 588
1001109557..... 637
1001109619..... 817
1001109621..... 817
1001109648..... 637, 661
1001109654..... 639, 663
1001109677..... 91, 95
1001110252...560, 568, 573, 577, 588
1001110425...239, 251, 263, 275, 291, 297
1001110604..... 588
1001110872..... 631, 633
1001110873...349, 355, 364, 372, 595
1001111081..... 573
1001111082..... 568
1001111083..... 577
1001111084..... 560
1001112551..... 785
1001112612....647, 673, 675
1001112669..... 43
1001112716..... 43
1001112766...191, 199, 207, 215, 223, 231
1001112796.....647
1001112850.....55
1001112927.. 216, 224, 232, 267, 279, 301, 333
1001113961.....673, 675
1001114438.....675
1001114487..... 97, 99, 101, 103, 105, 107, 109, 111, 113, 115, 117, 119
1001115603.....501
1001115961.....43
1001116208.....801
1001116707.....681
1001116710.....691
1001116728.....682
1001116774.....647
1001116792.. 239, 251, 263, 275, 291, 297
1001116808.....647
1001116812... 673, 685, 698
1001116846.....791
1001116849.....791
1001116851.....791
1001116952.....682, 685
1001116967.....681
1001116983.....691
1001117035.....791
1001117078.. 365, 368, 373, 376
1001117106.....682, 685
1001117107.....682, 685
1001117140.....179, 183
1001117172.....467, 814
1001117174... 450, 454, 467
1001117294.....817
1001117308.. 247, 259, 271, 283, 305, 813
1001118384.....779
1001118388.....779
1001118762.....539
1001118957.....91
1001119020.. 647, 673, 698, 717
1001119119.....87
1001119136.....819
1001119296.....589
1001119455.....87
1001119456..... 97, 99, 105, 107, 729
1001119470..... 97, 99, 101, 103, 105, 107, 109, 111, 679
1001119529.. 121, 125, 129, 133, 137, 141, 145, 149, 701
1001119619.....773
1001119620.....775, 777
1001119899.....392, 396
1001119938.....816
1001119946.....816
1001119968.. 364, 368, 373, 376
1001120140.....539
1001120141.....539
1001120328.....471, 473
1001120471.....475
1001120477.....475
1001120484.....475
1001120564.....89, 91
1001120634.....725
1001120653.....379
1001120989.....801
1001120995.....801
1001121615.....717
1001121616.....717
1001122528..364, 368, 373, 376
1001122611..783, 787, 791, 795, 797, 799
1001125387.....801
1001125425.....345
1001125427.....363
1001125428.....367
1001126009.....779
1001126011.....717
1001126351.....681, 685
1001126352.....681
1001126356.....681
1001126357.....681
1001126362.....682, 685
1001126363...682, 685, 686
1001126364...683, 685, 686
1001126365.....683
1001126384.....681
1001126391.....683, 685
1001126392.....683, 685
1001126485.....685
1001126487.....685
1001128527.....517
1001128556.....517
1001129858.....349, 350
1001131269.....783, 793
1001131482.....171
1001131542..191, 199, 207, 215, 223, 231, 240, 252, 264, 276, 291, 297
1001131730.....403
1001131732.....407
1001131969.....655
1001133163.....63
1001133593.....63
1001133633..247, 259, 271, 283, 305
1001133634..247, 259, 271, 283, 305
1001133714...683, 686, 689
1001133715...683, 686, 689
1001133956.....681, 685
1001133957.....681, 685
1001134390.....263, 267
1001134392..243, 246, 267, 270
1001134488..246, 260, 270, 284, 305
1001135138..247, 259, 271, 283, 305
1001135497.....171
1001135560..247, 259, 271, 283, 305
1001135562..247, 259, 271, 283, 305
1001135650...683, 686, 689
1001135651.....683, 686
1001135679.. 247, 259, 271, 283
1001135680.. 247, 259, 271, 283, 305
1001135779.. 248, 259, 272, 283, 305
1001135901.. 247, 259, 271, 283, 305
1001135903.....305
1001135913.. 247, 259, 271, 283, 305
1001135924.. 247, 259, 271, 283, 305
1001135926.. 247, 259, 271, 283, 305
1001135943.. 247, 259, 271, 283, 305
1001135946.....305
1001136356.....353
1001136357..... 359, 376
1001136626.. 247, 259, 271, 283, 305
1001136665.. 247, 259, 271, 283, 305
1001136834.. 247, 259, 271, 283, 305
1001137005.....819
1001137028.....817
1001137276.. 247, 259, 271, 283, 305
1001137364.. 129, 133, 141, 149, 454
1001137590.....371
1001137591.....375
1001137673..... 471, 813
1001138011.. 355, 359, 372, 376
1001138110.....683
1001138111.....683
1001138113.....683
1001138228.. 247, 259, 271, 283, 305
1001138248.. 247, 259, 271, 283, 305
1001138253.. 247, 259, 271, 283, 305
1001138346.. 247, 259, 271, 283, 681
1001138491.. 239, 251, 263, 275, 291, 297, 691
1001138494.. 427, 429, 435, 437, 439, 441
1001138514.. 427, 429, 437, 441
1001138524.. 247, 259, 271, 283, 305
1001138559.. 247, 259, 271, 283, 305
1001138565.....353
1001138566.. 349, 353, 355, 359, 812
1001138717.. 248, 260, 272, 284
1001138805.....541
1001138811.....383
1001138812..... 383, 396

1001138827 .. 247, 259, 271, 283, 305
1001138838 ..... 63, 67
1001139099 817
1001139240 .. 247, 259, 271, 283, 305
1001139357 ..... 349, 353
1001139492 95
1001139494 93
1001139520 ..... 63, 591
1001139654 801
1001139665 ..... 93, 95
1001139666 ..... 93, 95
1001139958 349
1001140222 337
1001140312 ..... 260, 284
1001140344 355
1001140346 356
1001140347 359
1001140397 359
1001140429 .. 425, 427, 429, 435, 437, 439, 441
1001140485 ..... 178, 182
1001140564 .. 246, 259, 270, 283, 305
1001141300 801
1001141302 801
1001141304 .. 248, 259, 272, 283, 306
1001141717 .. 248, 259, 272, 283, 306
1001141718 337
1001141719 .. 246, 259, 270, 283, 306
1001141745 ..... 275, 279
1001141746 .. 255, 258, 279, 282
1001141812 ..... 239, 243
1001141813 ..... 251, 255
1001142144 ..... 178, 182
1001142375 239
1001142376 263
1001142377 251
1001142378 275
1001142398 306
1001142501 .. 248, 260, 272, 284, 306
1001142504 817
1001142505 817
1001142610 .. 239, 251, 263, 275, 291, 297
1001142637 306
1001142645 ..... 355, 372
1001142683 ... 165, 167, 813
1001142685 .. 248, 260, 272, 284, 306
1001142719 ..... 165, 167
1001142736 ... 165, 167, 647
1001142938 ..... 683, 686
1001142940 ..... 683, 686
1001142941 ..... 683, 686
1001143087 ..... 93, 95
1001143123 ..... 93, 95
1001143298 171
1001143390 .. 248, 260, 272, 284, 306
1001143852 801
1001144089 ... 248, 260, 272, 284, 306
1001144433 471
1001144629 ... 421, 423, 435, 439
1001145089 ... 239, 251, 263, 275, 292, 298
1001145154 ... 248, 260, 272, 284, 306
1001145321 580
1001145322 588
1001145323 61
1001145382 ... 192, 200, 208, 216, 224, 232
1001145405 ..... 505, 508
1001145560 ... 239, 251, 263, 275, 292, 298
1001145708 817
1001145842 ... 240, 252, 264, 276, 292, 298
1001146050 171
1001146132 ..... 178, 182
1001146142 ..... 178, 182
1001146178 ..... 178, 182
1001146183 ..... 178, 182
1001146219 ... 246, 258, 270, 282, 306
1001146588 .... 292, 298, 306
1001147264 682
1001147479 ..... 410, 813
1001148675 ..... 631, 633
1001148841 689
1001148842 689
1001148843 ... 248, 260, 272, 284, 306, 689
1001148902 816
1001148903 816
1001148904 816
1001148905 816
1001148906 817
1001148971 817
1001149730 818
1001149818 ..... 163, 753
1001149955 163
1001149994 .... 163, 165, 167
1001150406 163
1001151393 153
1001152456 ..... 350, 356
1001152457 .... 349, 355, 356
1001152525 ... 350, 356, 364, 368, 372, 376
1001152530 ..... 350, 356
1001152533 ... 349, 353, 355, 359, 693
1001152566 ..... 179, 183
1001152742 682
1001152963 ... 243, 255, 295, 320
1001152971 584
1001153024 ... 247, 259, 271, 283, 306
1001153186 584
1001153188 584
1001153257 ..... 349, 355
1001153260 ..... 350, 356
1001153387 ... 248, 260, 272, 284, 306
1001154405 .. 239, 248, 251, 260, 263, 272, 275, 284, 292, 298, 306, 337
1001155044 ..... 450, 454
1001155045 ... 450, 454, 814
1001155575 .. 247, 259, 271, 283, 306
1001155823 .. 248, 260, 272, 284, 306
1001157520 .. 364, 368, 372, 376
1001157521 .. 364, 368, 372, 376
1001157525 .. 367, 368, 375, 376
1001157528 .. 364, 368, 372, 376
1001157592 .. 363, 364, 371, 372
1001158007 .. 364, 368, 372, 376
1001158008 .. 350, 356, 364, 368, 372, 376
1001158363 ..... 350, 356
1001159118 ... 631, 633, 812
1001159119 ..... 631, 633
1001159120 ..... 631, 633
1001159121 633
1001159186 ..... 697, 717
1001159256 ... 450, 454, 814
1001160505 ... 174, 178, 182
1001160567 87
1001161042 655
1001161043 655
1001161045 655
1001161049 655
1001161401 ..... 19, 24
1001161402 ..... 19, 24
1001161403 ..... 19, 24
1001161709 ... 450, 454, 814
1001161710 ... 450, 454, 814
1001162880 ..... 61, 65
1001163131 483
1001163287 493
1001163288 499
1001163289 497
1001163292 501
1001163293 489
1001163295 503
1001163296 495
1001163297 485
1001163298 491
1001164700 65
1001165035 .. 247, 260, 271, 284, 306
1001165101 .. 243, 255, 267, 279, 306, 337
1001165368 ... 353, 359, 665
1001165820 .. 248, 260, 272, 284, 306
1001166393 .. 247, 259, 271, 283, 306
1001166538 .. 450, 454, 463, 812
1001166539 .. 450, 454, 459, 812
1001167565 413
1001167567 413
1001167596 413
1001167632 686
1001167635 685
1001168402 413
1001170764 686
1001170982 306
1001171095 .. 216, 224, 233, 267, 279, 301, 329
1001171130 355
1001171131 631
1001171482 .. 121, 129, 137, 141, 145, 149
1001172045 817
1001172760 ..... 450, 454
1001173703 802
1001173889 ... 580, 584, 588
1001173890 ... 581, 585, 589
1001173913 23
1001173914 19
1001174040 413
1001175887 549
1001176346 51
1001176469 .. 137, 141, 145, 149
1001176862 631
1001176982 588
1001178247 ... 392, 396, 399
1001178248 ... 392, 396, 401
1001179154 .. 350, 356, 364, 372
1001180019 353
1001180219 359
1001180620 306
1001180696 801
1001180951 657
1001181045 .. 663, 665, 667, 812
1001181046 ..... 661, 812
1001181895 ..... 260, 284
1001181899 306
1001182361 ..... 681, 685
1001182806 161
1001184682 159
1001185281 ..... 450, 454
1001186333 431
1001186334 433
1001186379 427
1001186382 429
1001186383 423
1001186384 421
1001186431 ..... 471, 813
1001186432 ..... 721, 779
1001186517 471
1001187382 413
1001187383 413
1001187674 469
1001187681 773
1001187807 ..... 155, 457
1001188622 413
1001188844 413
1001188885 341
1001188887 341
1001189001 413
1001189002 413
1001190892 818
1001190985 413

SECTION 11 - SPECIAL OPTIONS/ACCESSORIES/KITS

1001191272...247, 259, 271, 283, 306
1001191395..... 817
1001191526..... 801
1001191541..... 19, 24
1001191620..... 306
1001192401..... 698
1001193018...599, 601, 603, 605, 607, 609, 611, 613, 615, 617, 619, 621, 623, 625, 627, 629
1001193674..... 19, 24
1001193806..... 817
1001195304..... 817
1001196634..... 339, 813
1001197017....477, 479, 481
1001197408..... 801
1001197510..... 801
1001197511..... 801
1001197512..... 801
1001197513..... 801
1001197514..... 802
1001197515..... 801
1001197519..... 801
1001197719..... 686
1001198671..... 341
1001200491..... 413
1001200494..... 413
1001200839..... 393, 397
1001200910..... 165
1001201351..... 413
1001201885..... 698
1001202076..... 817
1001202221..... 817
1001202280..... 341
1001202281..... 341, 812
1001202687..... 413
1001202697..... 816
1001202749..... 817
1001203655..... 431
1001203656..... 433
1001204046..... 817
1001204725..... 413
1001204898..... 817
1001205958...613, 615, 617, 619, 621, 623, 625, 627, 629
1001206250..... 617
1001206251..... 623
1001206252..... 629
1001206253..... 605
1001206254..... 611
1001206255..... 599
1001206476..... 645
1001206544..... 818
1001206794..... 817
1001206796..... 817
1001207004..... 167
1001207969..... 415
1001208299..... 306
1001208994..... 413, 415
1001209059..... 818
1001209481..... 818
1001209664..... 471
1001210029..... 818
1001210636..... 475
1001212223..... 371, 375
1001212243..... 380, 384
1001213183..... 816
1001213447..... 718
1001213584... 651, 653, 657
1001213585... 651, 653, 657
1001214029..... 802
1001214540..... 818
1001214548..... 818
1001214561..... 818
1001214562..... 818
1001214570..... 645
1001214571..... 645
1001216630..... 413
1001217005..... 165
1001218622..... 659
1001218623..... 659
1001219601.. 122, 126, 130, 134, 138, 142, 146, 150, 814
1001219989..... 45, 55, 415
1001220379..... 682
1001220510..... 802
1001220511..... 802
1001220512..... 802
1001220929..... 450, 454
1001221278..... 802
1001222314..... 415
1001223055..... 783
1001223453..... 783, 793
1001223459..... 683, 685
1001223971..... 793
1001224048..... 797
1001224049..... 799
1001224050..... 791
1001224052..... 787
1001224053..... 795
1001225118.. 192, 200, 208, 216, 224, 232
1001225245..... 501
1001225246..... 503
1001225247..... 493
1001225248..... 497
1001225249..... 491
1001225250..... 489
1001225251..... 499
1001225346..... 645, 814
1001225430... 287, 812, 813
1001225431..... 287, 813
1001225580..... 471, 721
1001225648..... 817
1001226293..... 659
1001226294..... 659
1001226306..... 659
1001226872..... 425
1001227449..... 816
1001227633..... 469
1001227634..... 469
1001227932..... 651
1001227933..... 651
1001227934..... 651
1001227935..... 653, 657
1001227936..... 653, 657
1001227937..... 653
1001227960..... 55
1001227985..... 469
1001227987..... 469
1001227996..... 775, 777
1001228019..... 23, 531
1001228025... 392, 396, 541
1001228031..... 29, 545
1001228032..... 388, 551
1001228034... 392, 396, 535
1001228077... 379, 383, 539
1001228080... 392, 396, 549
1001228215..... 425
1001228224..... 469, 813
1001228225..... 469, 813
1001228243..... 439
1001228375..... 441
1001228376..... 435
1001228377..... 437
1001228488..... 69, 77
1001228497 ..121, 125, 129, 133, 137, 141, 145, 149, 727
1001228498... 379, 383, 725
1001228617..... 69
1001228953..... 816
1001228988 ..517, 805, 807, 809
1001229058..... 69
1001229341..... 469
1001230934..... 681, 685
1001230935..... 681, 685
1001230936..... 681, 685
1001231235..... 819
1001231315..... 783
1001231316..... 793
1001231317..... 797
1001231318..... 799
1001231319..... 787
1001231320..... 795
1001231321..... 791
1001231801..... 801
1001231886..... 159
1001231949..... 525
1001231950..... 521, 523
1001232010... 521, 523, 525
1001232011... 521, 523, 525
1001232164..... 469
1001232165..... 469
1001232546..... 306, 309
1001232642..... 473
1001232667..... 473, 813
1001232842..... 339
1001233047..... 816
1001233492..... 306
1001233763..... 339
1001233959..... 155, 457
1001234800..... 685
1001235147..... 291
1001235148..... 297
1001235149..... 292, 295
1001235150..... 298, 301
1001235151... 295, 301, 304
1001235617..... 816
1001235952..... 306
1001236087..... 457
1001236091..... 155
1001236375..... 645
1001236376..... 645
1001236377..... 645
1001236378..... 645
1001236408..... 182
1001236552..... 473
1001236746..... 525
1001236747..... 521
1001236753..... 117
1001236891... 521, 523, 525
1001236895... 521, 523, 525
1001236951..... 817
1001237125... 178, 179, 182
1001237126..... 182
1001237285..... 306, 685
1001237544..... 457
1001237546..... 155
1001237667..... 697, 718
1001237668..... 697, 718
1001237705..... 487
1001237831..... 817
1001237863..... 469, 775
1001237864..... 469, 777
1001237865..... 469, 773
1001237882..... 817
1001237883..... 817
1001238263... 521, 523, 525
1001238319..... 469
1001238418..... 473, 779
1001238421..... 413
1001238423..... 487
1001238462..... 487
1001238463..... 523
1001238472..... 473
1001238495..... 471
1001238559..... 473
1001239202..... 686
1001239281..... 159
1001239345..... 649
1001241275..... 816
1001241383..... 161
1001241418..... 817
1001241547..... 818
1001241548..... 818
1001241891... 450, 454, 717
1001241965..... 473
1001242192..... 816
1001242324.. 121, 125, 129, 133, 137, 141, 145, 149, 697
1001242373.. 122, 126, 130, 134, 138, 142, 146, 150
1001242756..... 649
1001242824..... 645
1001242825..... 645
1001243183..... 816
1001243184..... 816
1001243414... 174, 178, 182
1001243543..... 113
1001243544..... 97
1001243583..... 101
1001243592..... 105
1001243593..... 109
1001243731..... 161
1001243734..... 159
1001243849..... 161
1001243895..... 339
1001243965..... 783
1001243994..... 793
1001244026..... 165
1001244027..... 167
1001244205..... 797

1001244206 791
1001244207 787
1001244208 799
1001244209 795
1001244298 791
1001246138 816
1001246142 816
1001246610 789
1001246611 785
1001246762 ..... 55, 57
1001246859 673
1001247073 818
1001247468 ..... 413, 813
1001248011 .. 121, 125, 129, 133, 137, 141, 145, 149
1001248140 ... 521, 523, 525
1001248141 ... 521, 523, 525
1001248539 .. 783, 787, 791, 793, 795, 797, 799
1001248540 ..... 785, 789
1001248546 ..... 785, 789
1001248547 783
1001248548 793
1001248549 797
1001248550 799
1001248551 787
1001248552 795
1001248553 791
1001249052 818
1001249244 649
1001249695 819
1001249941 819
1001249964 .. 247, 259, 271, 283, 287
1001250035 818
1001250301 ... 174, 178, 182
1001250465 818
1001250466 818
1001250595 818
1001251019 ..... 23, 533
1001251020 ..... 19, 23, 529
1001251025 ... 392, 396, 543
1001251031 ..... 29, 547
1001251078 ... 379, 383, 537
1001251267 .. 783, 785, 787, 791, 793, 795, 797, 799, 801
1001251268 ..... 789, 801
1001251329 816
1001252033 818
1001252034 818
1001252527 ..... 681, 685
1001252629 ... 521, 523, 525
1001253048 783
1001253049 783
1001253050 793
1001253051 793
1001253052 797
1001253053 797
1001253054 791
1001253056 791
1001253057 787
1001253058 787
1001253059 799
1001253060 799
1001253061 795
1001253062 795
1001253375 721
1001253593 ....379, 383, 813
1001253618 819
1001253619 819
1001254472 473
1001254473 473
1001255133 413
1001256298 178
1001256299 178
1001256506 682
1001256507 681
1001256859 ..... 93, 95
1001256864 ...247, 259, 271, 283, 305
1001256879 .....292, 298
1001257277 ...191, 200, 208, 216, 224, 232
1001258495 .....775, 777
1001258800 305
1001260432 304
1001260937 454
1001261045 304
1001261085 304
1001261250 801
1001262016 818
1001262959 819
1001263923 ....707, 715, 723
1001264917 ...247, 259, 271, 283
1001264982 ...247, 259, 271, 283
1001265163 475
1001265327 819
1001265342 475
1001265854 .....129, 133
1001265855 141
1001265856 150
1001265859 ...122, 126, 130, 134
1001265860 ...138, 142, 146, 150
1001265864 ...121, 122, 126, 129, 130, 134
1001265865 ...137, 138, 142, 145, 146, 150
1001265867 .....99, 103, 115, 129, 133
1001265868 ....107, 111, 141
1001265869 .....119, 149
1001265901 447
1001265903 .....447, 453
1001265905 .....450, 454
1001266056 818
1001266098 818
1001266284 818
1001266489 818
1001266935 .....97, 101, 113, 121, 125
1001266936 ....105, 109, 137
1001266937 .....117, 145
1001266941 .....121, 125
1001266942 137
1001266943 146
1001267315 801
1001267387 445
1001267389 .....445, 449
1001267653 115
1001267654 99
1001267655 103
1001267656 107
1001267657 111
1001267658 119
1001268241 801
1001269136 818
1001269187 818
1001269389 818
1001270339 649
1001270340 649
1001270520 816
1001271497 717
1001271642 818
1001271731 816
1001271760 818
1001272090 816
1001272166 817
1001272202 816
1001274249 819
1001274829 817
1001274830 817
1001276610 816
1001276923 816
1001277191 819
1001277210 45
1001277222 819
1001277844 819
1001277849 817
1001278483 .. 122, 126, 130, 134, 138, 142, 146, 150
1001278609 ..... 83, 85
1001279488 .. 121, 125, 129, 133, 137, 141, 145, 149, 673
1001280410 ..... 125, 133
1001281100 .. 121, 125, 129, 133, 137, 141, 145, 149, 813
1001283008 .. 247, 259, 271, 283
1001288110 ..... 97, 99, 101, 103, 105, 107, 109, 111, 113, 115, 117, 119
1001288636 816
1001306146 816
1001311034 473
1060341 . 477, 479, 481, 693
1060343 ..... 364, 372
1060545 665
1060698 715
1060902 ..... 677, 703
1060903 ..... 477, 479, 481
1060904 ..... 207, 231
1060908 603, 609, 615, 621, 627, 661, 663, 667
1060918 467
1060981 727
10702077364, 368, 372, 376
10702082364, 368, 372, 376
10836804 ..... 125, 133
1100141 ..... 392, 396
1120423 817
1120549 29
1120550 29
1120555 483, 485, 487, 489, 491, 493, 495, 497, 499, 501, 503
1180386 406
1180387 403
1180388 403
1180389 403
1180390 403
1260017 73
1283457 556, 564, 571, 575, 580
1320022 187, 191, 195, 199, 203, 207, 211, 215, 219, 223, 227, 231, 240, 247, 252, 259, 264, 271, 276, 283, 291, 297, 304, 341
1320041 187, 195, 203, 211, 219, 227, 595, 597, 635, 639
1320058 191, 199, 207, 215, 223, 231
1320060 191, 199, 207, 215, 223, 231
1320095 121, 125, 129, 133, 137, 141, 145, 149
1320159 406
1320162 .....89, 91, 93, 95
1320177 .....505, 508
1320187 187, 195, 203, 211, 219, 227, 239, 251, 263, 275, 291, 297
1320190 187, 195, 203, 211, 219, 227, 239, 251, 263, 275, 291, 297
1320223 191, 199, 207, 215, 223, 231
1320263 .....19, 23, 406
1320277 406
1320288 .....403, 406
1320289 406
1320294 406
1320296 406
1320301 410
1320302 . 508, 513, 515, 517
1320309 .....755, 757
1320322 .....55, 87
1320323 87
1320325 406
1320327 406
1320328 403
1321283 .....292, 298
1321289 . 248, 260, 272, 284
1321385 407
1321716 .....292, 298
1340065 191, 199, 207, 215, 223, 231
1340067 816
1380147 .....169, 171
1560011 .....755, 757
1560012 .....755, 757
1580012 443
1580013 817
1600343 .....450, 454
1600443 .....235, 812
1660256 81
1660261 410
1670603 599

SECTION 11 - SPECIAL OPTIONS/ACCESSORIES/KITS

1670996 51
1671013 388
1671023 191, 199, 207, 215, 223, 231
1671039 410
1671040 ..... 29, 410
1671044 410
1671045 51
1671046 51
1671047 51
1671048 51
1671049 51
1671092 .....364, 372, 655
1671093 .....508, 515, 655
1671109 .....174, 178, 182
1671112 410
1671113 410
1671117 410
1671118 .....174, 178, 182
1671121 187, 195, 203, 211, 219, 227, 239, 251, 263, 275, 291, 297
1671122 406
1671123 410
1671142 411
1671191 175
1671192 174
1671193 .....175, 179, 183
1671194 174, 175, 178, 179, 182, 183
1671314 ..... 449, 453
1701499 783, 785, 787, 789, 791, 793, 795, 797, 799
1701501 783, 785, 787, 789, 791, 793, 795, 797, 799
1701505 783, 785, 787, 789, 791, 793, 795, 797, 799
1701509 483, 485, 487, 489, 491, 493, 495, 497, 499, 501, 503, 783, 785, 787, 789, 791, 793, 795, 797, 799
1701518 ..... 785, 789
1701529 783, 785, 787, 789, 791, 793, 795, 797, 799
1702565 ..... 449, 453
1702566 ..... 449, 453
1702773 .431, 433, 789, 801
1702774 801
1702868 517, 783, 801, 807, 809
1702938 .....477, 479, 481
1702942 ..... 203, 227
1703162 191, 199, 207, 215, 223, 231, 248, 260, 272, 284, 304
1703175 801
1703483 801
1703804 783
1703805 783
1703811 783, 785, 787, 789, 791, 793, 795, 797, 799
1703814 783, 785, 787, 789, 791, 793, 795, 797, 799
1703935 799
1703936 793
1703938 795
1703939 797
1703941 799
1703942 793
1703943 791
1703944 795
1703945 797
1703947 799
1703948 793
1703949 791
1703950 795
1703951 797
1703953 783
1703959 801
1703980 795
1703981 797
1703982 791
1703983 799
1703984 793
1704000 ..... 793, 801
1704001 ..... 799, 801
1704260 ..... 449, 453
1704277 783, 785, 787, 789, 791, 793, 795, 797, 799
1704412 783, 785, 787, 789, 791, 793, 795, 797, 799
1704885 801
1704972 783
1705014 ..... 431, 433
1705171 ..... 449, 453
1705174 ..... 785, 789, 793
1705305 . 517, 805, 807, 809
1705325 ..... 601, 603, 605
1705336 783
1705344 795
1705345 797
1705347 793
1705351 783
1705355 ..... 805, 807, 809
1705358 483, 485, 487, 489, 491, 493, 495, 497, 499, 501, 503
1705374 . 349, 355, 631, 633
1705375 364, 372, 517, 807, 809
1705387 . 349, 355, 364, 373
1705426 795
1705427 797
1705429 793
1705430 791
1705460 . 364, 368, 372, 376
1705461 ..... 368, 376
1705468 ..... 785, 789
1705489 . 353, 359, 368, 376
1705492 783
1705493 795
1705503 797
1705505 793
1705511 783, 785, 787, 789, 791, 793, 795, 797, 799
1705515 801
1705744 ..... 449, 453
1705745 ..... 449, 453
1705822 ..... 785, 789
1705828 ..... 785, 789
1705838 801
1705864 ..... 789, 801
1705896 787
1705897 787
1705898 787
1705901 787
1705902 787
1705903 787
1705905 787
1705906 787
1705910 799
1705915 799
1705917 799
1705921 ..... 785, 789
1705961 ..... 785, 789
1705967 ..... 787, 801
1705969 ..... 797, 801
1706059 787
1706060 791
1706061 ..... 797, 799
1706062 795
1706064 793
1706098 ..... 785, 789
1706385 ..... 431, 433
1706770 ..... 785, 789
2030010 505, 508, 513, 515, 517
2060025 191, 199, 207, 215, 223, 231
2080040 .421, 423, 435, 439
2080051 .....174, 178, 182
2110404 .....36, 57, 58, 417, 556, 560, 580, 584, 588
2110406 ....49, 57, 571, 573, 589, 591
2110604 ..... 571, 573
2110606 ....47, 57, 417, 571, 573
2110608 .....580, 584, 588
2110610 556, 560, 580, 584, 588
2110612 ..... 556, 560
2110808 ..36, 564, 568, 580, 584, 588, 589
2110810 ....49, 58, 556, 560, 588
2110812 ...36, 564, 568, 589
2111010 .....57, 58, 81, 549, 556, 560, 581, 585, 589
2111012 ....49, 81, 556, 560, 581, 585, 589
2111016 588
2111210 ..... 57, 58
2111212 ....57, 81, 549, 556, 560, 580, 584, 588
2111216 57
2111616 589
2111620 .....580, 584, 588
2112016 57
2112020 .....580, 584, 588
2113232 .....580, 584, 588
2120167 87
2120168 ..... 87, 812
2120217 415
2120218 187, 195, 203, 211, 219, 227, 240, 252, 264, 276, 291, 297
2120219 187, 195, 203, 211, 219, 227, 240, 252, 264, 276, 291, 297, 812
2130404 589
2130406 ..... 36, 591
2130606. 556, 560, 575, 577
2130612 ..... 556, 560
2130808 ..... 580, 584, 588
2130810 ..... 47, 58
2130812... 36, 581, 585, 588
2131008. 551, 580, 584, 588
2131010 58
2131210. 551, 580, 584, 588
2131212 89, 91, 93, 95, 580, 584, 588
2131620 ..... 581, 585, 589
2132020 ..... 581, 585, 589
2150404 ..... 556, 560
2150808 ..... 580, 584, 588
2151012 49
2151212 ..... 580, 584, 588
2160002 71
2170204 ..... 556, 560
2170308 ..... 581, 585, 589
2170312 591
2170504. 564, 568, 571, 573
2170506 ..... 571, 573, 591
2170704. 557, 561, 564, 568
2170708 ..... 556, 560
2170712 89, 91, 93, 95, 556, 560, 589
2170804 ..... 564, 568
2170908 ..... 581, 585, 589
2171112 ..... 93, 95
2171210 ..... 556, 560
2171212 ..... 556, 560
2171306 ..... 556, 560
2171308 ..... 556, 560
2171310 ..... 556, 560
2180344 71
2180348 187, 195, 203, 211, 219, 227, 341
2180830 ..... 556, 560
2180832 239, 251, 263, 275, 291, 297, 505, 508
2220001 71
2220235 ..... 20, 564, 568
2220313 187, 195, 203, 211, 219, 227, 239, 251, 263, 275, 291, 297
2220451 191, 199, 207, 215, 223, 231
2220478 ..... 580, 584, 588
2220498 191, 199, 207, 215, 223, 231
2220550 591
2220737 ..... 580, 584
2220811 ..... 580, 584, 589
2220816 341
2220883.. 49, 533, 535, 537, 539, 541, 543, 551
2220885 531, 533, 539, 541, 545, 547, 549, 551
2220886 ..... 535, 537, 549
2220887 57
2220888 ..... 58, 539
2220893 87
2221046 341
2221086. 47, 49, 57, 58, 417
2221117 ..... 580, 584

2221123 ..... 556, 560, 591
2221176 187, 195, 203, 211, 219, 227
2221221 ..... 589, 591
2400060 339, 475, 673, 675, 698, 718
2400064 ..... 673, 675, 813
2400065 ..... 669, 697, 813
2400066 ..... 669, 697
2410014 ..... 431, 433
2420191 87
2420203 345
2460048 ..... 363, 367
2460055 345
2540044 406
2560136 ..... 449, 453
2560187 ..... 175, 179, 183
2580062 ..... 207, 231
2600279 122, 126, 130, 134, 138, 142, 146, 150
2600280 ..... 174, 178, 182
2600281 . 421, 423, 435, 439
2680496 ..... 175, 179, 183
2680498 ..... 175, 179, 183
2717059 ..... 556, 560
2720015 . 247, 259, 271, 283
2720058 191, 199, 207, 215, 223, 231, 341
2720160 ..... 505, 508
2720500 191, 199, 207, 215, 223, 231
2720501 191, 199, 207, 215, 223, 231
2720516 ..... 556, 560
2750528 71
2750532 187, 191, 195, 199, 203, 207, 211, 215, 219, 225, 227, 231, 239, 251, 263, 275, 291, 297
2753541 ..... 564, 568
2753545 . 556, 560, 564, 568
2753546 ..... 580, 584, 588
2753552 ..... 564, 568
2753582 ..... 564, 568
2753590 ..... 580, 584, 588
2753673 ..... 580, 584, 588
2753677 ..... 564, 568
2753685 ..... 564, 568
2753703 ..... 564, 568
2753713 ..... 564, 568
2753714 ..... 564, 568
2753715 ..... 564, 568
2753716 . 556, 560, 564, 568
2753717 ..... 556, 560
2753719 ..... 571, 573
2753726 ..... 571, 573
2753727 ..... 571, 573
2753728 ..... 575, 577
2753729 ..... 571, 573
2753732 ..... 575, 577
2753733 ..... 575, 577
2753734 ..... 575, 577
2753735 ..... 575, 577
2753736 ..... 575, 577
2753737 ..... 575, 577
2753738 ..... 575, 577
2753739 ..... 575, 577
2753741 ..... 580, 584
2753742 ..... 575, 577
2753743 ..... 575, 577
2753746 ..... 580, 584, 588
2753747 ..... 564, 568
2753748 ..... 564, 568
2753749 ..... 564, 568
2753750 ..... 564, 568
2753752 ..... 564, 568
2753753 ..... 575, 577
2753754 ..... 575, 577
2753756 ..... 564, 568
2753757 ..... 564, 568
2753759 ..... 564, 568
2753760 ..... 564, 568
2753761 ..... 564, 568
2753762 ..... 564, 568
2753764 ..... 564, 568
2753768 ..... 564, 568
2753778 ..... 89, 91
2753781 591
2753843 ... 89, 580, 584, 588
2753897 ..... 556, 560
2753975 ..... 580, 584, 588
2753976 ..... 580, 584, 588
2753977 ..... 580, 584, 588
2753978 ..... 556, 560
2753979 ..... 580, 584, 588
2753984 ..... 580, 584, 588
2753985 ..... 556, 560
2753986 ..... 556, 560
2753987 ..... 556, 560
2753988 ..... 580, 584, 588
2753989 ..... 580, 584, 588
2753990 ..... 580, 584, 588
2753991 ..... 580, 584, 588
2753992 ..... 580, 584, 588
2753993 ..... 556, 560
2753994 ..... 556, 560
2753995 ..... 580, 584
2753996 ..... 580, 584
2753997 ..... 580, 584
2753998 ..... 556, 560
2753999 .. 91, 556, 560, 580, 584, 588
2754000 ..... 580, 584
2754001 ..... 580, 584, 588
2754002 ..... 556, 560
2754003 ..... 556, 560
2754004 ..... 580, 584, 588
2754006 580
2754007 ..... 580, 584
2754010 ..... 556, 560
2754011 ..... 556, 560
2754123 ..... 556, 560
2754124 ..... 556, 560
2754288 ..... 556, 560
2754870 ..... 580, 584, 588
2792647 571
2792772 564
2792773 575
2820031 345, 349, 353, 355, 359, 363, 367, 371, 375
2820035 ..... 157, 339
2820141 174
2820145 175
2820146 175
2820247 ..... 775, 777
2840016 ..... 169, 171
2860030 ..... 153, 813
2900770 417, 531, 533, 537, 539, 541, 543, 551
2900789 ..... 549, 551
2900792 529
2901443 819
2902065 191, 199, 207, 215, 223, 231, 247, 258, 271, 282, 304, 335
2902087 531
2902212 483, 485, 487, 489, 491, 493, 495, 497, 499, 501, 503
2902217 ..... 508, 513, 515
2902257 545
2902285 535
2902291 551
2902292 187, 195, 203, 211, 219, 227
2902356 816
2902443 ..... 679, 682, 685
2910351 817
2915024 45
2915072 ..... 71, 819
2920028 449, 453, 477, 479, 481
2920029 449, 453, 477, 479, 481
2920161 163
2940074 421, 423, 435, 439, 813
2940173 ..... 174, 178, 182
3010133 ..... 379, 383
3010134 ..... 379, 383
3010136 ..... 393, 397
3020042 ..... 388, 393, 397
3128444 819
3160339 ..... 33, 39
3200362 191, 199, 208, 215, 223, 232
3200401 191, 199, 208, 215, 223, 232
3200433 410
3200458 410
3220130 343
3251102 345, 349, 353, 355, 359, 363, 367, 371, 375
3251242 599, 607, 611, 613, 617, 619, 623, 625, 629
3251243 349, 356, 364, 372, 783, 787, 791, 793, 795, 797, 799
3251813 801
3252347 783
3252507 . 609, 615, 621, 627
3271605 ..... 521, 523, 525
3271805 ..... 431, 433
3272001 246, 258, 270, 282, 304, 379, 383, 393, 397, 521, 523, 525
3290405 353, 359, 475, 599, 601, 603, 605, 607, 609, 611, 613, 615, 617, 619, 621, 623, 625, 627, 629, 637, 639
3290601 ..... 175, 179, 183
3290605 122, 126, 130, 134, 138, 142, 146, 150, 505, 508
3290606 . 427, 429, 437, 441
3290607 ..... 165, 167
3290801 246, 258, 270, 282, 304
3290805 ..... 407, 645
3290806 248, 260, 272, 284, 413
3291001 413
3291005 413
3291007 ..... 379, 383
3291201 413
3291205 413
3300151 425, 427, 429, 435, 437, 439, 441, 508, 513, 515, 517
3300353 ..... 449, 453
3300364 410
3300396 350, 356, 364, 368, 372, 376
3300408 155
3300430 ..... 410, 471
3300454 .. 55, 165, 167, 192, 200, 208, 216, 224, 232
3300464 29
3300465 545
3300482 ..... 449, 453
3300492 ..... 403, 407
3310401 247, 258, 271, 282, 304
3310601 121, 125, 129, 133, 137, 141, 145, 149, 169, 171
3310805 ..... 19, 23
3311001 121, 125, 129, 133, 137, 141, 145, 149, 337, 350, 356, 364, 368, 372, 376
3311005 345, 349, 355, 364, 368, 372, 376, 449, 453, 505, 508, 513, 515, 517
3311401 ..... 477, 479, 481
3311402 122, 126, 130, 134, 138, 142, 146, 150
3311405 .. 45, 159, 161, 178, 182, 192, 200, 208, 216, 224, 232, 239, 246, 251, 258, 263, 270, 275, 282, 291, 297, 304, 345, 353, 359, 410, 445, 447, 473, 599, 601, 603, 605, 607, 609, 611, 613, 615, 617, 619, 621, 623, 625, 627, 629, 639, 669, 783, 785, 787, 789, 791, 793, 795, 797, 799
3311501 175, 179, 183, 477, 479, 481
3311505 .. 29, 45, 89, 91, 93, 95, 171, 187, 192, 195, 200, 203, 208, 211, 216, 219, 224, 227, 232, 415
3311508 349, 355, 363, 367, 371, 375

SECTION 11 - SPECIAL OPTIONS/ACCESSORIES/KITS

3311601 ..87, 174, 178, 182, 450, 454, 473
3311602 403
3311605 ..45, 61, 63, 89, 91, 169, 171, 174, 178, 182, 187, 192, 195, 200, 203, 208, 211, 216, 219, 224, 227, 232, 246, 258, 270, 282, 304, 337, 345, 392, 396, 407, 415, 431, 433, 445, 447, 508, 513, 515, 517
3311608 ....61, 63, 403, 406, 410
3311705 246, 258, 270, 282, 304
3311801 .355, 359, 371, 375
3311805 ....81, 83, 169, 171, 192, 200, 208, 216, 224, 232, 240, 252, 264, 276, 291, 297
3312002 ...69, 521, 523, 525
3312005 ..23, 483, 485, 487, 489, 491, 493, 495, 497, 499, 501, 503
3312205 483, 485, 487, 489, 491, 493, 495, 497, 499, 501, 503
3312602 163, 165, 167, 379, 383
3322201 ..... 81, 83
3340763 551
3340764 406
3340787 406
3340877 .....175, 179, 183
3340878 .....388, 392, 396
3340881 ..... 19, 23
3340927 ..... 379, 383
3340934 406
3340941 ..... 403, 406
3340942 406
3340943 406
3340956 483, 485, 487, 489, 491, 493, 495, 497, 499, 501, 503
3340974 ..... 392, 396
3340978 388
3340979 388
3340980 388
3340982 549
3380434 ..... 445, 447
3380473 187, 195, 203, 211, 219, 227
3380498 187, 195, 203, 211, 219, 227
3380523 55
3380528 410
3380547 ..... 379, 383
3380723 187, 195, 203, 211, 219, 227, 240, 252, 264, 276, 291, 297
3421453 ..... 505, 508
3421563 73
3421565 73
3422178 ..... 392, 396
3422446 187, 195, 203, 211, 219, 227, 239, 251, 263, 275, 291, 297
3422532 192, 200, 208, 216, 224, 232
3422833 23
3422915 23
3422917 29
3422918 ..... 19, 23
3422920 ..... 379, 383
3422937 ..... 392, 396
3422940 29
3422941 29
3422957 ..... 392, 396
3422958 ..... 392, 396
3422960 ..... 19, 23
3423058 ..... 392, 396
3423059 ..... 392, 396
3423061 ..... 379, 383
3423062 ..... 379, 383
3423063 ..... 379, 383
3423064 ..... 379, 383
3423065 ..... 379, 383
3423066 388
3423190 ..... 392, 396
3423209 ..... 379, 383
3423256 ..... 29, 410
3430616 ..... 450, 454
3430816 ..... 169, 171
3450404 ..... 169, 171
3451214 29
3460334 483, 485, 487, 489, 491, 493, 495, 497, 499, 501, 503
3470003 ..... 450, 454
3520026 ..... 449, 453
3520030 ..... 449, 453
3520054 .. 23, 192, 200, 208, 216, 224, 232, 306, 449, 453
3520071 483, 485, 487, 489, 491, 493, 495, 497, 499, 501, 503
3520072 421, 423, 425, 427, 429, 431, 433, 435, 437, 439, 441
3520174 ..... 783, 785, 789
3520186 ..... 174, 178, 182
3520189 ..... 368, 376
3520192 ..... 368, 376
3520198 421, 423, 425, 427, 429, 435, 437, 439, 441
3537416 192, 200, 208, 216, 224, 232
3537445 169
3538758 406
3539971 192, 200, 208, 216, 224, 232
3573142 192, 200, 208, 216, 224, 232
3573144 122, 126, 130, 134, 138, 142, 146, 150
3573294 ..... 19, 23
3573335 ..... 19, 23
3573355 75
3573400 . 508, 513, 515, 517
3573411 192, 200, 208, 216, 224, 232
3573412 192, 200, 208, 216, 224, 232
3573529 192, 200, 208, 216, 224, 232
3573642 .508, 513, 515, 517
3573644 187, 195, 203, 211, 219, 227
3573669 187, 195, 203, 211, 219, 227
3573727 187, 195, 204, 211, 219, 227
3573728 188, 196, 204, 211, 219, 228
3574091 481
3574492 169
3574494 87
3574533 ..... 174, 178, 182
3574580 549
3574586 549
3574606 406
3574630 551
3574633 188, 196, 204, 212, 220, 228
3574644 403
3575359 ..... 477, 479
3575782 ..... 175, 179, 183
3576799 ..... 505, 508
3577121 .508, 513, 515, 517
3580158 ..... 192, 216
3580276 345
3580317 349, 353, 355, 359, 364, 367, 371, 375
3580318 .349, 355, 364, 371
3580319 .353, 359, 368, 375
3580320 200, 208, 224, 232, 246, 258, 270, 282
3600339 .192, 200, 208, 314
3620034 ..... 89, 91
3641569 ..... 477, 479
3740049 121, 125, 129, 133, 137, 141, 145, 149, 813
3740067 ....61, 63, 192, 200, 208, 216, 224, 232, 812, 813
3740080 192, 200, 208, 216, 224, 232, 345, 669, 812, 813
3740086 ..... 779, 813
3740143 ..... 751, 813
3760133 ..... 388, 392, 396
3760170 73
3760217 ..... 393, 397
3760233 ..... 393, 397
3760368 541
3760383 ..... 29, 410
3760475 ..... 379, 383
3790012 ..... 449, 453, 465
3790152 216, 224, 233, 267, 279, 301
3790155 216, 225, 233, 267, 279, 301
3790158 36
3811340 388
3820001 783, 785, 787, 789, 791, 793, 795, 797, 799
3820020. 421, 423, 435, 439
3841143 188, 196, 204, 212, 220, 228, 239, 251, 263, 275, 291, 297, 393, 397, 413
3841203 ..... 393, 397
3841258 ..... 23, 29, 393, 397
3841287 ..... 19, 23, 379, 383
3841340 ..... 45, 87
3841356 ..... 379, 383
3841581 ..... 379, 383
3900054 ..... 431, 433
3900085 ..... 163, 165, 167
3900210 415
3900232 ... 87, 174, 178, 182
3900251 122, 126, 130, 134, 138, 142, 146, 150
3900259 ..... 393, 397
3900260 406
3900267 ..... 350, 356
3900269 388
3900270 ..... 19, 23
3900283 .. 51, 174, 178, 182, 403, 406, 415
3900300 ..... 350, 356
3900316 174, 178, 182, 188, 196, 204, 212, 220, 228, 240, 252, 264, 276, 291, 297, 415
3900322 345
3900349 ..... 449, 453
3900363 ..... 175, 179, 183
3910408 247, 258, 271, 282, 304
3910606 349, 355, 364, 371, 595, 597, 631, 633
3910608 ..... 169, 171
3910612 595
3910804 153
3930606 410
3930816 410
3930820 ..... 19, 23
3931008 81
3931016 349, 355, 363, 367, 371, 375
3931020 ..... 29, 410
3931408 471
3931412 ..... 29, 410
3931414 410
3931432 247, 258, 271, 282, 304
3931508 248, 260, 272, 284, 304
3931512 .... 81, 85, 246, 258, 270, 282, 304
3931516 541
3931532 551
3931616 .... 97, 99, 101, 103, 105, 107, 109, 111, 113, 115, 117, 119, 122, 126, 130, 134, 138, 142, 146, 150
3931624 410
3931628. 246, 258, 270, 282
3931656 549
3931724 551
3931740 549

3931816 27
3931824 ..... 531, 535
3932024 29
3932240 539
3941404 57
3952020 69
3960389 411
3960418 122, 126, 130, 134, 138, 142, 146, 150
3960422 349, 355, 364, 371, 595, 597, 631, 633
3960464 ..... 175, 179, 183
3960525 87
3960543 192, 200, 208, 216, 224, 232, 246, 258, 270, 282, 304
3960544 192, 200, 208, 216, 224, 232, 246, 258, 270, 282, 304
3960551 29
3960552 29
3960571 411
3980006 ..... 61, 63
3990001 ..... 697, 812
4000008 ..... 411, 813
4010408 . 353, 359, 637, 639
4010608 ..... 505, 508
4010618 . 427, 429, 437, 441
4031505 469
4031516 473
4031914 246, 258, 270, 282, 304
4032014 . 246, 258, 270, 282
4032022 192, 200, 208, 216, 224, 232
4060092 597
4060802 345, 349, 353, 355, 359, 364, 368, 371, 375
4060804 175, 179, 183, 192, 200, 208, 216, 224, 232
4060805 192, 200, 208, 216, 224, 232
4060806 ..... 175, 179, 183
4060808 45
4070864 ..... 388, 393, 397
4071031 ..... 388, 410
4071035 ..... 19, 23
4071036 ..... 19, 23
4071039 ..... 19, 23
4071040 ..... 19, 23
4071041 69
4071042 ..... 19, 23
4071044 ..... 393, 397
4071045 ..... 393, 397
4071048 ..... 174, 178, 182
4071049 20
4071050 20
4071054 ..... 19, 23
4071055 ..... 19, 23
4071067 388
4071069 388
4071071 388
4071072 406
4071073 ..... 393, 397
4071074 ..... 449, 453
4071076 403
4071081 388
4100063 407
4100101 ..... 393, 397
4160194 ..... 174, 178, 182
4220189 403
4220190 403
4220197 407
4220235 27
4240017 .... 97, 99, 101, 103, 105, 107, 109, 111, 113, 115, 117, 119
4240018 188, 196, 204, 212, 220, 228, 349, 353, 355, 359, 364, 368, 371, 375, 410, 631, 633
4240032 165, 167, 669, 671, 679, 755, 757
4240033 188, 196, 204, 212, 220, 228, 407, 410, 469, 471, 473, 649, 671, 679, 707, 723
4240099 192, 200, 208, 216, 224, 232, 248, 260, 272, 284, 292, 298, 304, 339, 477, 479, 481, 508, 513, 515
4240139 87
4240149 483, 485, 487, 489, 491, 493, 495, 497, 499, 501, 503
4240150 ..... 175, 179, 183
4240153 406
4240155 ..... 19, 24, 403, 406
4240156 407
4300157 . 355, 359, 371, 375
4340810 410
4340811 410
4340832 121, 125, 129, 133, 137, 141, 145, 149
4340861 411
4340959 410
4340995 ..... 174, 178, 182
4340996 ..... 174, 178, 182
4341000 ..... 174, 178, 182
4341001 ..... 174, 178, 182
4341110 188, 196, 204, 212, 220, 228
4341158 411
4360057 . 477, 479, 481, 813
4360070 350, 356, 364, 368, 372, 376, 812
4360274 ..... 145, 149, 814
4360328 121, 125, 129, 133, 137, 141, 145, 149, 465, 814
4360336 345, 349, 353, 355, 359, 364, 368, 371, 375, 814
4360387 137, 141, 145, 149, 449, 453, 477, 479, 481, 814
4360407 ..... 449, 453, 812
4360469 ..... 153, 814
4360475 121, 125, 129, 133, 137, 141, 145, 149, 449, 453, 814
4360476 121, 125, 129, 133, 137, 141, 145, 149, 449, 453
4360505 ..... 29, 410, 813
4360542 ..... 345, 812
4360548 ..... 410, 813
4360552 411
4360578 .... 19, 23, 711, 713, 813
4360579 ..... 771, 813
4360622 411
4400462 87
4420014 483, 485, 487, 489, 491, 493, 495, 497, 499, 501, 503
4420037 .... 61, 63, 508, 513, 515, 517
4420038 87
4420051 801
4420060 ..... 393, 397
4420066 483, 485, 487, 489, 491, 493, 495, 497, 499, 501, 503
4420068 ..... 477, 479, 481
4460007 ..... 449, 453
4460016 717
4460019 669, 679, 682, 685, 701
4460027 345
4460035 675
4460042 ..... 683, 686, 718
4460043 ..... 339, 682, 685
4460049 ..... 477, 479, 481
4460051 ..... 595, 597
4460068 ..... 350, 356
4460071 349, 355, 364, 371, 467
4460121 649
4460125 597
4460142 ..... 697, 717
4460183 ..... 673, 675, 717
4460190 345
4460205 595
4460213 717
4460224 360
4460225 . 693, 695, 697, 717
4460226 460, 463, 467, 641, 718
4460227 . 641, 649, 697, 717
4460234 .... 97, 99, 101, 103, 105, 107, 109, 111, 113, 115, 117, 119, 208, 232, 260, 284, 449, 453, 477, 479, 481
4460247 ..... 682, 685
4460256 . 669, 701, 755, 757
4460259 . 475, 697, 701, 717
4460260 . 475, 697, 701, 717
4460265 ..... 460, 463
4460267 ..... 715, 717, 753
4460268 157, 159, 161, 693, 695, 715
4460294 360
4460297 697
4460312 701
4460313 ..... 679, 697, 701
4460315 . 371, 595, 597, 679
4460320 ..... 715, 753
4460346 349, 355, 364, 371, 595
4460374 669
4460375 669
4460418 ..... 697, 717
4460419 ..... 697, 715, 717
4460424 . 157, 159, 161, 715
4460425 121, 125, 129, 133, 137, 141, 145, 149, 350, 356, 364, 368, 372, 376, 477, 479, 481, 631, 633
4460426 350, 356, 364, 368, 372, 376
4460428 121, 125, 129, 133, 137, 141, 145, 149, 449, 453
4460434 717
4460458 ..... 682, 685
4460464 .. 85, 467, 475, 647, 649, 669, 671, 673, 675, 677, 682, 691, 697, 701, 707, 715, 717, 721, 723, 725, 729, 753, 767, 779
4460465 .. 85, 364, 368, 373, 376, 475, 647, 649, 671, 673, 675, 679, 681, 682, 685, 686, 693, 695, 697, 698, 701, 703, 705, 707, 709, 715, 717, 721, 723, 727, 763, 765
4460466 .. 85, 469, 475, 647, 649, 671, 673, 675, 679, 681, 682, 685, 686, 698, 701, 705, 709, 715, 717, 721, 723, 763, 765, 767, 769, 773, 779
4460467 819
4460470 121, 125, 129, 133, 137, 141, 145, 149, 449, 453
4460471 121, 125, 129, 133, 137, 141, 145, 149, 449, 453
4460473 ..... 709, 763, 765
4460474 697
4460483 ..... 350, 356
4460488 ..... 165, 167
4460496 .... 97, 99, 101, 103, 105, 107, 109, 111, 113, 115, 117, 119, 449, 453
4460497 .... 97, 99, 101, 103, 105, 107, 109, 111, 113, 115, 117, 119, 449, 453
4460508 469, 697, 701, 717, 767
4460509 ..... 709, 763, 765
4460510 819
4460518 647
4460526 121, 125, 129, 133, 137, 141, 145, 149
4460536 675, 711, 715, 717, 767
4460539 643, 649, 685, 701, 713, 715, 717, 767, 769
4460612 ..... 631, 633
4460613 ..... 697, 767

SECTION 11 - SPECIAL OPTIONS/ACCESSORIES/KITS

4460702 .679, 701, 755, 757
4460703 ..... 682, 685
4460708 .....449, 453, 718
4460709 597
4460722 .....339, 759, 761
4460746 685
4460748 685
4460761 .....641, 649, 697
4460806 613, 615, 617, 619, 621, 623, 697, 717
4460807 ..... 693, 695
4460808 ..... 693, 695
4460836 ..85, 649, 671, 681, 697, 715
4460837 121, 125, 129, 133, 137, 141, 145, 149
4460842 715
4460843 715
4460865 ..... 709, 763
4460866 .....697, 717, 767
4460868 698
4460871 673, 675, 697, 701, 715, 717, 727
4460873 ..... 697, 717
4460874 121, 125, 129, 133, 137, 141, 145, 149, 717
4460875 121, 125, 129, 133, 137, 141, 145, 149
4460876 ..... 697, 717
4460877 698
4460878 697
4460879 ..... 475, 717
4460880 .....671, 715, 729
4460884 ..85, 475, 649, 671, 686, 698, 721, 727, 761
4460887 .475, 697, 701, 717
4460888 ..... 698, 717
4460891 647, 691, 701, 703, 715, 723
4460892 121, 125, 129, 133, 137, 141, 145, 149, 671
4460894 649, 671, 679, 682, 686, 697, 698, 717
4460897 669, 677, 691, 723, 729, 753
4460898 675
4460899 .701, 721, 773, 779
4460905 121, 125, 129, 133, 137, 141, 145, 149, 449, 453, 673, 675, 717
4460910 777
4460911 755, 757, 759, 761, 773
4460912 .755, 757, 759, 761
4460914 ..29, 121, 125, 129, 133, 137, 141, 145, 149, 411
4460918 755, 757, 759, 761, 767
4460925 717
4460926 723
4460928 ..... 647, 723
4460930 671, 679, 681, 682, 686, 697, 705, 715
4460931 .681, 701, 715, 751
4460932 475, 643, 649, 682, 691, 725, 759
4460933 647, 671, 673, 675, 682, 698, 715, 717
4460934..... 671, 681, 769
4460935..... 671, 681
4460941 649, 671, 681, 691, 697, 773
4460942 469, 649, 669, 682, 686, 691, 697, 715
4460943.. 85, 165, 167, 643, 649, 671, 681, 701, 711, 715, 717, 751, 759, 767, 769, 773
4460944.. 85, 643, 649, 671, 673, 679, 681, 682, 685, 686, 697, 698, 701, 713, 715, 717, 761, 767, 769
4460945..... 673, 685
4460950..... 85, 671, 682
4460951..... 697
4460956. 661, 663, 665, 667
4460957. 661, 663, 665, 667
4460958..... 633
4460962..... 508, 515, 655
4460963..... 364, 372, 655
4460965..... 697, 715
4460967. 364, 368, 373, 376
4460968.... 19, 23, 411, 711, 713, 771
4460970..... 649, 681
4460971..... 505, 508
4460982..... 682
4461003..... 765
4461004..... 715
4461005..... 679, 715
4461006..... 679, 715
4461007..... 715
4461008. 679, 683, 685, 715
4461009..... 767
4461013..... 755, 757
4461052..... 679
4461053..... 679
4461054. 679, 683, 686, 691
4461060..... 679
4461070. 647, 679, 681, 682
4461071..... 679, 682, 685
4461072..... 679, 682, 685
4461073..... 679, 682, 685
4461074..... 679, 682, 685
4461077..... 767, 773, 779
4461095. 647, 679, 681, 682
4461097..... 679
4461196..... 731, 733
4461197..... 733
4461198..... 605, 731, 733
4461199..... 735, 737
4461200..... 737
4461201..... 611, 735, 737
4461203..... 741
4461205. 739, 741, 743, 745
4461206..... 745
4461244..... 617, 739, 741
4461245..... 623, 743, 745
4461246..... 629, 747, 749
4461249..... 747, 749
4461250..... 749
4530028. 508, 513, 515, 519
4562516..... 403, 406
4568293 192, 200, 208, 216, 224, 232
4568426 .....89, 91
4568427 .....89, 91
4568815 .....581, 585, 588
4568849 .....580, 585, 588
4630006 .....393, 397
4640452 .....541, 543
4640509 529
4640751 192, 200, 208, 216, 224, 232, 248, 260, 272, 284, 304
4640858 531
4640938 537
4641114 .....541, 543
4641155 45
4641162 551
4641247 .....89, 93
4641255 417
4641260 .....541, 543
4641268 .....45, 47
4641276 .....531, 533
4641285 539
4641288 549
4641298 551
4641316 591
4641340 537
4641370 537
4641372 .....556, 560
4641386 535
4641388 535
4641393 535
4641454 .....45, 49
4641460 .....415, 417
4700014 388
4710400 247, 258, 271, 282, 304
4711000 337, 350, 356, 364, 368, 372, 376
4711400 45, 55, 61, 63, 159, 161, 174, 178, 182, 188, 196, 204, 212, 220, 228, 239, 247, 251, 258, 263, 271, 275, 282, 291, 297, 304, 349, 353, 355, 359, 364, 368, 371, 375, 406, 411, 425, 427, 429, 435, 437, 439, 441, 471, 473, 595, 597, 599, 601, 603, 605, 607,609, 611, 613, 615, 617, 619, 621, 623, 625, 627, 629, 635, 637, 639
4711500 ..29, 45, 89, 91, 93, 95, 171, 188, 192, 196, 200, 204, 208, 212, 216, 220, 224, 228, 232, 246, 258, 270, 282, 304, 411, 415
4711600 ..19, 23, 45, 55, 61, 63, 87, 169, 171, 174, 178, 182, 188, 192, 196, 200, 204, 208, 212, 216, 220, 224, 228, 232, 239, 246, 251, 258, 263, 270, 275, 282, 291, 297, 304, 337, 341, 345, 349, 353, 355, 359, 364, 368, 371, 375, 379, 383, 403, 407, 415, 450, 454, 521, 523, 525
4711700 246, 258, 270, 282, 304, 341, 345
4711800 19, 24, 29, 45, 169, 171, 192, 200, 208, 216, 224, 232, 240, 252, 264, 276, 291, 297, 411, 431, 433
4711900..... 345
4712000.. 24, 483, 485, 487, 489, 491, 493, 495, 497, 499, 501, 503, 521, 523, 525
4712200 483, 485, 487, 489, 491, 493, 495, 497, 499, 501, 503
4740171..... 255
4740181..... 29
4740229..... 29
4740274 192, 200, 208, 216, 224, 232
4740362..... 445, 447
4740397 121, 125, 129, 133, 137, 141, 145, 149, 345, 449, 453
4740430..... 51
4740461..... 19, 24
4740492..... 379, 383
4740500..... 174, 178, 182
4740505..... 29
4740518 192, 200, 208, 216, 224, 232
4750600 121, 125, 129, 133, 137, 141, 145, 149, 169, 171
4750800..... 19, 24, 449, 453
4751000.. 87, 121, 125, 129, 133, 137, 141, 145, 149, 163, 165, 167, 345, 349, 355, 364, 368, 372, 376, 411, 449, 453, 505, 508, 513, 515, 517
4751400 121, 125, 129, 133, 137, 141, 145, 149, 165, 167, 192, 200, 208, 216, 224, 232, 246, 258, 270, 282, 304, 345, 443, 445, 447, 449, 453, 477, 479, 481, 508, 513, 515, 517, 783, 785, 787, 789, 791, 793, 795, 797, 799
4751500 157, 175, 179, 183, 349, 355, 364, 368, 371, 375, 477, 479, 481
4751600.. 29, 51, 61, 63, 75, 87, 89, 91, 97, 99, 101, 103, 105, 107, 109, 111, 113, 115, 117, 119, 122, 126, 130, 134, 138, 142, 146, 150, 174, 178, 182, 415, 445, 447, 508, 513, 515, 517
4751700 246, 258, 270, 282, 304

4751800 .... 81, 83, 431, 433, 477, 479, 481
4752000 188, 196, 204, 212, 220, 228, 239, 251, 263, 275, 291, 297
4755000 29
4760600 ..... 595, 597
4760800 ..... 449, 453
4761400 443
4770600 ..... 169, 171
4791400 ..... 55, 61, 63, 192, 200, 208, 216, 224, 232, 246, 258, 270, 282, 306, 349, 353, 355, 359, 364, 368, 371, 375
4811400 475, 599, 601, 603, 605, 607, 609, 611, 613, 615, 617, 619, 621, 623, 625, 627, 629
4811600 29
4811700 122, 126, 130, 134, 138, 142, 146, 150, 165, 167, 304, 427, 429, 437, 441, 505, 508
4811900 175, 179, 183, 246, 258, 270, 282, 304, 406, 413, 645
4811902 246, 258, 270, 282, 305
4812000 246, 258, 270, 282, 305, 379, 383, 413
4812100 239, 246, 251, 258, 263, 270, 275, 282, 291, 297, 305, 413
4812200 246, 258, 270, 282, 305
4831900 246, 258, 270, 282, 305
4846383 ..... 19, 24
4846482 ..... 393, 397
4846503 174
4846552 192, 200, 208, 216, 224, 232
4846627 . 508, 513, 515, 517
4846637 ..... 19, 24
4846673 481
4846871 ..... 174, 178, 182
4846872 ..... 174, 178, 182
4846920 407
4846945 . 200, 208, 224, 232
4846946 192, 200, 208, 216, 224, 232
4891400 411
4891500 346
4891600 .. 87, 174, 178, 182, 216, 224, 232, 267, 279, 301, 403, 407, 413
4891800 169, 171, 192, 200, 208, 216, 224, 232, 243, 267, 279, 295, 301, 349, 353, 355, 359, 364, 368, 371, 375, 388, 393, 397, 403, 407
4892000 31, 41, 43, 71, 246, 258, 270, 282, 305, 346, 379, 383
4892400 69
4892600001 413
4922099 697
4922641 .365, 368, 373, 376
4922666 ..... 450, 454, 641
4922696 671
4922718 643
4922767 707
4922777 723
4922784 703
4922785 677
4922947 757
4922948 755
4922949 769
4922950 761
4922951 759
4922955 709
4922956 763
4922958 765
4922972 364, 368, 371, 375, 695
4923036 121, 125, 129, 133, 137, 141, 145, 149, 751
4923169 771
4923170 711
4923171 713
4923256 705
4923373 767
4923382 669
4923397 121, 125, 129, 133, 137, 141, 145, 149, 715
4923468 192, 200, 208, 216, 224, 232
4923592 .192, 200, 216, 224
4933218 ..... 477, 481
5241200 ..... 36, 413
5251008 413
5251016 413
70000044 235
70000124 345
70000125 345
70000342 399
70000345 ..... 235, 287, 309
70000619 363, 367, 371, 375
70000777 ..... 537, 551
70000778 ..... 537, 551
70000780 81
70000781 57
70000793 335
70000796 401
70000801 49
70000802 49
70000803 ..... 49, 813
70000804 49
70000805 49
70000806 49
70000852 39
70000853 39
70000854 39
70000855 39
70000856 39
70000857 39
70000858 39
70000859 39
70000860 39
70000861 39
70000862 39
70000863 363, 367, 372, 375
70000916 235
70000917 235
70000918 235
70000919 235
70000950 321
70001017 343
70001100 363, 367, 371, 375
70001123 ..... 81, 85
70001125 235
70001126 235
70001128 235
70001129 235
70001130 235
70001131 235
70001135 235
70001344 ..... 187, 195, 203, 211, 219, 227, 240, 252, 264, 276, 291, 297
70001384 363, 367, 371, 375
70001421 58
70001424 511
70001425 511
70001427 511
70001428 511
70001429 511
70001430 511
70001431 ..... 511, 812
70001432 ..... 511, 814
70001435 235
70001639 399
70001640 401
70001696 ..... 363, 367
70001847 235
70001850 235
70001857 235
70001867 235
70001868 235
70001870 ..... 235, 287, 310
70001871 235
70001873 58
70001939 47
70001952 314
70001953 ..... 363, 367
70001955 329
70001956 329
70001958 327
70001966 ..... 350, 353, 356, 359, 363, 367, 372, 375
70001968 ..... 315, 321
70001973 363, 367, 372, 376
70001974 363, 367, 372, 376
70001976 47
70002015 35
70002016 35
70002018 35
70002019 35
70002020 35
70002021 35
70002026 35
70002027 35
70002029 35
70002030 35
70002031 35
70002032 ..... 35, 77
70002033 35
70002034 35
70002035 35
70002036 35
70002037 35
70002039 35
70002040 35
70002041 35
70002044 35
70002045 35
70002046 35
70002047 35
70002048 35
70002049 35
70002050 35
70002052 35
70002057 ..... 35, 77
70002088 ..... 363, 367
70002097 ..... 415, 812
70002132 326
70002133 ..... 326, 329
70002134 326
70002135 326
70002136 326
70002137 326
70002138 326
70002139 326
70002140 326
70002141 326
70002142 326
70002145 326
70002148 326
70002150 326
70002151 326
70002152 326
70002153 326
70002154 326
70002155 326
70002156 326
70002157 326
70002158 326
70002159 326
70002160 326
70002161 326
70002162 326
70002163 326
70002164 326
70002165 326
70002168 327
70002174 327
70002175 327
70002177 327
70002178 327
70002179 327
70002231 ..... 187, 195, 203, 211, 219, 227, 239, 251, 263, 275, 291, 297, 812
70002247 36
70002248 36
70002249 36
70002255 ..... 363, 367
70002291 ..... 372, 376
70002297 ..... 363, 367
70002373 543
70002410 547
70002412 533
70002460 363, 367, 372, 376
70002569 316
70002576 333
70002578 329

SECTION 11 - SPECIAL OPTIONS/ACCESSORIES/KITS

70002580..... 329
70002582..... 329
70002583..... 329
70002585..... 329
70002586..... 329
70002588..... 329
70002589..... 329
70002590..... 329
70002592..... 330
70002593..... 330
70002599..... 330
70002600..... 326
70002601..... 326
70002602..... 326
70002604..... 327
70002605..... 327
70002606..... 327
70002607..... 327
70002608..... 327
70002609..... 327
70002610..... 327
70002612..... 327
70002616..... 327
70002617..... 327
70002618..... 326
70002619..... 326
70002620..... 326
70002621..... 327
70002622..... 327
70002623..... 327
70002674..... 35
70002718..... 235, 287
70002742..... 58
70002743..... 58
70002859..... 401
70002902..... 467
70002903..... 467
70002904..... 467
70002905..... 467
70003043..... 58
70003135..... 235
70003136..... 235
70003165..... 322
70003167..... 321
70003170..... 322
70003173..... 320
70003174..... 320
70003175..... 320
70003177..... 320
70003340..... 321, 322
70003475..... 235
70003628..... 39
70003631363, 367, 372, 375
70003708.....350, 353, 356, 359, 363, 367, 372, 375
70003709.....350, 353, 356, 359, 363, 367, 372, 375
70003800..... 67
70003801..... 67
70003802..... 67
70003803..... 67
70003913..... 407
70003914..... 407
70003916..... 407
70003919..... 403
70003920..... 403
70004005..... 65
70004006..... 65
70004007..... 65
70004092..... 350, 353, 356, 359, 372, 376
70004094..... 372, 376
70004098350, 356, 372, 376
70004099356, 359, 372, 375
70004169..... 363, 367
70004171350, 353, 363, 367
70004185..... 819
70004237..... 547
70004277..... 288, 310
70004280..... 287
70004282..... 288
70004328..... 415
70004414..... 87
70004416..... 329
70004417..... 329
70004420..... 329
70004421..... 329
70004422..... 330
70004423..... 329
70004426..... 329
70004467..... 77
70004469..... 77
70004474..... 77
70004477..... 77
70004480..... 77
70004481..... 77
70004494..... 78
70004501..... 288
70004502..... 288
70004503..... 309
70004504..... 288, 309
70004505..... 287
70004506..... 287
70004507..... 287
70004508..... 287, 309
70004509..... 287
70004510..... 287
70004646..... 819
70004647..... 819
70004648..... 819
70004676350, 353, 356, 359
70004677..... 353
70004678350, 353, 356, 360
70004680350, 353, 356, 360
70004681..... 353, 360
70004682350, 353, 356, 360
70004683..... 353, 360
70004684..... 350
70004685..... 350, 356
70004686..... 359
70004687..... 356
70004738..... 463
70004739..... 463
70004740..... 463
70004741..... 463
70004742..... 463
70004743..... 463
70004744..... 463
70004745..... 463
70004746..... 463
70004747..... 463
70004748..... 463
70004749..... 463
70004750..... 463
70004751 463
70004752 459
70004753 459
70004754 459
70004755 459
70004756 459
70004757 459
70004758 459
70004759 459
70004760 459
70004761 459
70004762 459
70004763 459
70004764 459
70004765 459
70004766 459
70004767 459
70004768 459
70004769 459
70004770 459
70004771 459
70004772 459
70004773 459
70004774 460
70004775 460
70005143 543
70005153 533
70005171 287
70005172 ..... 287, 309
70005184 309
70005317 77
70005318 77
70005418 330
70005433 537
70005456 81
70005480 320
70005481 320
70005527 288
70005615 65
70005616 65
70005617 65
70005618 65
70005619 65
70005647 288
70005648 ..... 288, 813
70005921 287
70005926 288
70005929 288
70005931 ..... 288, 309
70005938 310
70005941 ..... 287, 309
70005942 ..... 287, 309
70006093 ..... 372, 375
70006094 ..... 372, 376
70006095 ..... 372, 376, 812
70006096 ..... 372, 376
70006097 ..... 372, 376
70006137 ..... 187, 195, 203, 211, 219, 227, 240, 252, 264, 276, 291, 297
70006144 ..... 287, 309
70006315 57
70006473 531
70006474 531
70006490 545
70006491 545
70006492 545
70006493..... 545
70006494..... 535
70006495..... 535
70006496..... 535
70006507..... 539
70006508..... 539
70006509..... 539
70006520..... 531
70006523..... 541
70006524..... 541
70006525..... 541
70006526..... 541
70006552349, 353, 355, 359
70006553..... 349, 353, 355, 359, 813
70006596..... 533, 543, 547
70006653..... 288
70006693..... 549
70006694..... 549
70006695..... 549
70006696..... 549
70006713..... 551
70006714..... 551
70006715..... 551
70006716..... 551
70006717..... 551
70006718..... 551
70006927..... 537
70006986..... 77
70006987..... 77
70006988..... 77
70006989..... 77
70006990..... 77
70006991..... 77
70006992..... 77
70006993..... 77
70006994..... 77
70006995..... 77
70006996..... 77
70006997..... 77
70006998..... 77
70006999..... 77
70007000..... 77
70007001..... 77
70007002..... 77
70007003..... 77
70007004..... 78
70007005..... 78
70007006..... 78
70007007..... 78
70007008..... 78
70007009..... 77
70007010..... 78
70007011..... 77
70007012..... 78
70007013..... 78
70007049..... 535
70007178..... 322
70007226..... 57
70007227..... 57
70007228..... 57, 812
70007229..... 57
70007230..... 57
70007231..... 57, 812
70007282..... 537
70007325..... 288
70007326..... 288

70007327 288
70007328 288
70007329 288
70007330 288
70007331 288
70007353 236
70007382 529
70007383 529
70007384 529
70007385 529
70007386 529
70007431 537
70007432 537
70007433 537
70007434 537
70007435 537
70007436 537
70007437 537
70007438 537
70007439 537
70007510 85
70007603 309
70007984 533
70007985 533
70007987 533
70007988 533
70007989 533
70007993 543
70007994 543
70007995 543
70007996 543
70007997 543
70007998 543
70008004 547
70008005 547
70008006 547
70008007 547
70008359 85
70008360 85
70008361 85
70008362 85
70008363 85
70008364 85
70008365 85
70008367 85
70020329 321
70020336 322
70021867 ..... 314, 320
70022286 329
70022564 533, 537, 543, 547
70023592 ..... 247, 259, 271, 283, 305, 813
70023593 ..... 247, 259, 271, 283, 305, 813
70024190 ..... 247, 259, 271, 283, 305, 812, 813
70024494 ..... 287, 309
70024504 ..... 288, 309
70024507 ..... 288, 309
70024513 ..... 287, 309
70024904 ..... 287, 310
70024905 287
70024906 287
70024912 288
70024915 ..... 288, 309
70024916 309
70024917 288
70024918 309
70024919 287
70024920 ..... 287, 288
70024924 ..... 287, 309
70024925 ..... 287, 309
70024961 ..... 287, 309
7002511 287
70025112 288
70025120 288
70025130 309
70025135 287
70025136 287
70025137 287
70025140 287
70025142 ..... 288, 309
70025144 287
70025145 287
70025146 287
70025151 287
70025152 287
70025153 309
70025154 287
70025160 309
70025164 ..... 288, 309
70025181 287
70025182 287
70025183 288
70025184 288
70025200 288
70025205 287
70025210 ..... 288, 813
70025235 287
70025239 287
70025242 288
70025788 288
70025877 288
70026210 ..... 288, 309
7002821 819
7002822 819
7002823 819
7002828 819
70028540 288
70028699 288
70029401 ..... 288, 309
70029433 288
70029451 287
70029468 537
70029517 288
70029520 288
70029557 288
70029581 309
70029797 288
7003655 191, 199, 207, 215, 223, 231
7004275 819
7004276 819
7007207 ..... 326, 329
7007415 ..... 327, 329, 330
7007418 326
7007419 326
7007420 39
7007437 39
7007438 39
7007439 ..... 39, 327
7007446 ..... 39, 326, 329
7007489 333
7007986 533
7010543 49
7010697 57
7011311 537, 539, 549, 556, 560
7011346 .. 47, 417, 537, 551, 556, 560
7011351 549
7011353 535
7011355 417
7011359 551
7011361 551
7011362 537
7011364 537
7011365 537
7011367 ..... 537, 539
7011368 549
7011369 549
7011370 549
7011371 549
7011372 549
7011375 537
7011376 535
7012513 345
7012514 345
7012558 345
7012706 ..... 314, 320
7012709 314
7012715 314
7012773 47
7012941 49
7012942 49
7012943 ..... 57, 812
7012944 ..... 49, 417, 812
7012955 49
7012967 ..... 49, 541
7012998 ..... 49, 543
7015003 191, 199, 207, 215, 223, 231
7015013 191, 199, 207, 215, 223, 231
7015014 191, 199, 207, 215, 223, 231
7015015 191, 199, 207, 215, 223, 231
7016319 163
7016322 ..... 169, 171
7016328 ..... 235, 812
7016331 235, 287, 309, 812, 813
7016372 163
7016374 ..... 169, 171
7016654 819
7016655 819
7017142 399
7017159 399
7017162 ..... 399, 401
7017163 ..... 399, 401
7017164 ..... 399, 401
7017185 401
7017195 ..... 399, 401
7017402 417
7017405 49
7018936 ..... 316, 322
7018991 ..... 47, 812
7019680 ..... 345, 812
7020021 87
7020043 87
7020108 345
7020109 345
7020110 345
7020111 345
7020175 121, 125, 129, 133, 137, 141, 145, 149, 449, 453
7020176 121, 125, 129, 133, 137, 141, 145, 149, 449, 453
7020190 345
7020414 235
7020447 235
7020460 235
7020465 ..... 235, 287, 309
7020468 235
7020471 235
7020479 235
7020486 235
7020492 288
7021249 39
7021256 327
7021265 327
7021275 ..... 39, 326, 329
7021293 327
7022300 327
7022301 326
7022311 39
7022314 39
7022321 39
7022340 329
7022368 39
7022371 39
7023881 315
7023887 320
7023922 417
7023936 63
7023962 329
7023964 ..... 329, 330
7024005 315
7024006 321
7024038 ..... 314, 320
7024042 314
7024043 314
7024044 ..... 314, 320
7024064 ..... 314, 320
7024065 ..... 315, 321
7024068 315
7024069 ..... 316, 322
7024070 315
7024071 ..... 315, 321
7024072 ..... 315, 321
7024073 ..... 315, 321
7024075 ..... 315, 321
7024076 ..... 315, 321
7024077 ..... 315, 321
7024078 321
7024079 321
7024080 315
7024081 ..... 315, 322
7024083 315
7024084 315
7024085 316
7024087 316
7024088 316
7024089 316
7024096 322

SECTION 11 - SPECIAL OPTIONS/ACCESSORIES/KITS

7024097 315
7024439 87
7024440 87
7024441 87
7024443 87
7024444 ..... 87, 812
7024445 87
7024446 87
7024462 519
7024463 519
7024467 519
7024469 519
7024470 519
7024471 ..... 511, 519
7024472 519
7024473 519
7024474 519
7024475 519
7024478 519
7024485 .....363, 367, 812
7024488 .363, 367, 371, 375
7024489 .363, 367, 371, 375
7024530 511
7024531 511
7024532 511
7024533 511
7024534 511
7024535 511
7024536 511
7024537 511
7024565 235
7024571 ..... 417, 812
7024572 417
7024579 ..... 235, 287
7024584 187, 195, 203, 211, 219, 227
7024598 ..... 169, 171
7024800 327
7024865 39
7024867 39
7024868 39
7024890 ..... 55, 812
7024905 321
7024906 ..... 315, 321
7024907 321
7024908 ..... 315, 321
7024909 321
7024911 ..... 315, 321
7024913 ..... 314, 320
7024914 314
7024915 314
7024916 314
7024917 ..... 314, 320
7024918 ..... 314, 320
7024919 ..... 314, 320
7024920 ..... 314, 320
7024921 ..... 314, 320
7024922 ..... 314, 320
7024927 47
7026018 417
7026019 417
7026020 417
7026021 417
7026022 417
7026023 417
7026028 47
7026029 ..... 81, 812
7026030 81
7026031 ..... 81, 813
7026032 81
7026188 ..... 363, 367
7026597 . 363, 367, 372, 376
7026599 87
7026600 87
7026608 235
7026626 . 363, 367, 372, 376
7026665 81
7026671 58
7026672 58
7026678 58
7026680 58
7026683 58
7026684 57
7026685 57
7026686 57
7026687 57
7026688 57
7026689 57
7026692 57
7026693 57
7026694 57
7026695 57
7026696 57
7026697 57
7026980 322
7027008 187, 195, 203, 211, 219, 227
7027009 187, 195, 203, 211, 219, 227
7027010 187, 195, 203, 211, 219, 227
7027011 187, 195, 203, 211, 219, 227
7027046 239, 251, 263, 275, 292, 298
7027047 239, 251, 263, 275, 292, 298
7027048 239, 251, 263, 275, 292, 298
7027049 240, 252, 264, 276, 292, 298
7027200 57
7027201 57
7027202 57
7027203 57
7027204 57
7027207 ..... 57, 812
7027208 57
7027235 235
7027236 235
7027239 235
7027240 235
7027276 235
7027284 ..... 556, 560
7027285 ..... 556, 560
7027738 ..... 57, 813
7027740 39
7027773 519
7027774 519
7027775 519
7027776 519
7027777 519
7027778 519
7027779 519
7027780 519
7027790 235
7027791 235
7027792 235
7027799 .363, 367, 372, 376
7027882 57
7027887 345
7028909 ..... 165, 167
77143013 ..... 122, 126, 130, 134, 138, 142, 146, 150
77363233 ..... 693, 695
8007508 801
8007894 58
8007935 58
8007939 58
8007954 58
80334079 322
80334251 81
80484084 ..... 682, 685
80604015 85
80604016 85
80604021 85
80934174 321
80934644 322
80983191 ..... 682, 813
8220051 691
8220164 ..... 681, 685
8229242 ..... 682, 698, 813
8229249 ..... 475, 718, 813
8310070 122, 126, 130, 134, 138, 142, 146, 150, 411
8310129 483, 485, 487, 489, 491, 493, 495, 497, 499, 501, 503
8405006 239, 248, 251, 260, 263, 272, 275, 284, 291, 297, 305, 337
8405007 247, 260, 271, 284, 305
8405009 305
8405201 246, 259, 270, 283, 305
8405204 246, 259, 270, 283, 305
8405212 305
8405213 305
8406102 248, 260, 272, 284, 305
8406112 248, 260, 272, 284, 305
8406201 306
8406302 246, 258, 270, 282, 305
8410011. 248, 260, 272, 284
8410013 192, 200, 208, 216, 224, 232, 246, 259, 270, 283
8410014 305
8580420 51
88261024 415
88521214 ..... 521, 523, 525
88662523 ..... 174, 178, 182
90028660 ..... 188, 196, 204, 212, 220, 228, 240, 252, 264, 276, 291, 297
91143339 682
91143340 681
91203039 413
91403230 ..... 783, 785, 787, 789, 791, 793, 795, 797, 799
91563070 ..... 246, 259, 270, 283, 305
SEE NOTE 392, 396

Corporate Office
JLG Industries, Inc.
1 JLG Drive
McConnellsburg, PA 17233-9533 USA

(717) 485-5161 (Corporate)
(877) 554-5438 (Customer Support)
(717) 485-6417

Visit our website for JLG Worldwide Locations.
www.jlg.com

OSHKOSH™