Illustrated Parts Manual

Models
800AJ HC3

PVC
2107

P/N
31219069

January 9, 2023 - Rev D

ANSI
CE
UK
CA
AS/NZS

An Oshkosh Corporation Company

REVISION LOG

July 12, 2021 - A - Original Issue Of Manual (Edited to B/M 1001248000 Revision K)
August 6, 2021 - B - Revised Manual (Edited to B/M 1001248000 Revision K)
November 15, 2021 - C - Revised Manual (Edited to B/M 1001248000 Revision K)
January 9, 2023 - D - Revised Manual (Edited to B/M 1001248000 Revision O)

GENERAL INFORMATION

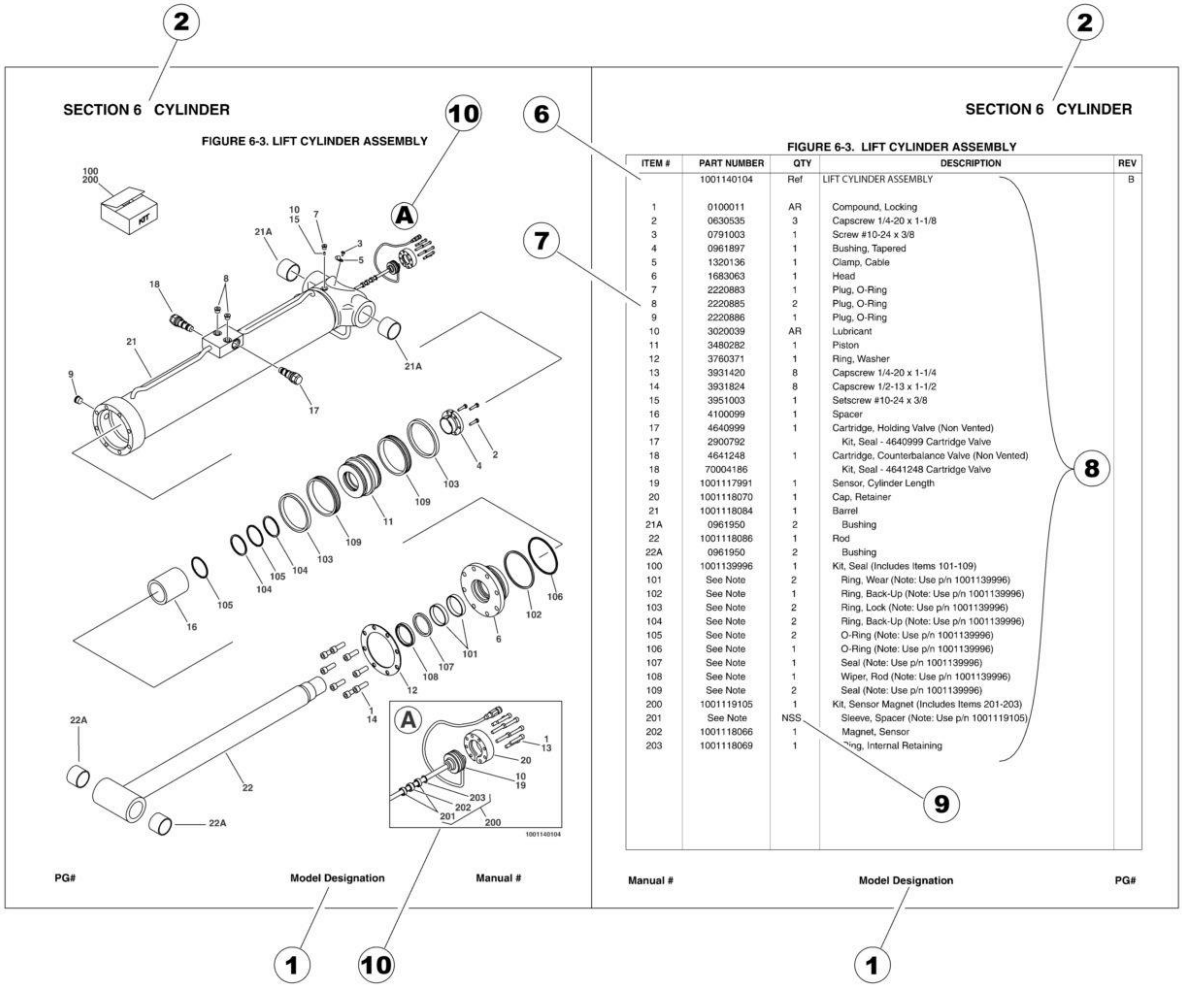

1) MACHINE IDENTIFICATION
Machines are identified by model and in some cases a combination of models, serial number (SN) or regional standard (i.e ANSI, CE,CSA). Components may also be identified by SN or manufacturer. Common components that may be identified by these characteristics are engines and hydraulic components.

2) PARTS MANUAL ORGANIZATION
Product information in this manual is organized under section titles. Frame, Cylinder, Hydraulic and Electrical are a few examples. Each section is organized by figure and page number. The information within the Figure is then organized by item number, part number, description and corresponding illustration (s).

3) TABLE OF CONTENTS (NOT SHOWN)
A table of contents is found toward the beginning of the manual. Figure number, description and page number are provided for quick reference to the page containing the related information.

4) RECOMMENDED SPARE PARTS (NOT SHOWN)
The Recommended Spare Parts List, located near the end of the manual, reference most frequently used maintenance parts.

5) PART NUMBER INDEX (NOT SHOWN)
A numerical index listing all part numbers and the corresponding page number(s) appears at the back of the manual.

GENERAL INFORMATION

6) NON-SERVICED PARTS

In some instances, it is necessary to display non-serviced parts, assemblies or installations. In the case of assemblies and installations there will be a Ref in the Qty. column. In case of parts that are not available for service within assemblies or components, there will be a NSS (Not Sold Separately) or NLA (No Longer Available) listed in the Qty. column of the manual.

7) PARTS LIST ITEM NUMBERS

Numbers shown in the item# column correspond to numbers used in the associated illustration (s). Item numbers which are missing from the sequence in the parts list are not used on that page.

8) INDENTED PARTS DESCRIPTION

An indented part description is included in the item under which it is indented.

9) ABBREVIATION AND SYMBOLS

AC..... Alternating Current
ADE.....Advanced Design Electronics
AG.....Agricultural
ANSI.....American National Standards Institute
AR.....As Required
ASSY..... Assembly
AUS.....Australia
AUX.....Auxiliary
AWG.....American Wire Gauge
B/M.....Bill of Material
CAC.....Charge Air Cooler
CE.....European Conformity
CCW.....Counter Clockwise
CM.....Centimeter
CW.....Clockwise
CSA.....Canadian Standards Association
CYL.....Cylinder
DIA.....Diameter
DC.....Direct Current
DEF.....Diesel Exhaust Fliud
EMS..... Emergency Stop
ENG.....Engine
FT(ft) .....Feet
GA(Ga).....Gauge
HRC.....High Rated Countries
HVAC.....Heating, Ventilating, and Air Conditioning
HYD.....Hydraulic
Hz.....Hertz
ID.....Inside Diameter
IN.....inches
ISO.....International Organization for Standards
JIC.....Joint Industry Council
KG.....Kilogram
L.....Liter
LB(LBS).....Pounds
LCD..... Liquid Crystal Display
LED..... .Light Emitting Diodes
LH.....Left Hand
LRC.....Low Rated Countries
LSS.....Load Sensing System
M(m).....Metric/Meter
MM(mm).....Milimeter
mA.....Miliamps
NLA.....No Longer Available
NPT..... National Pipe Threads
NSS.....Not Sold Separately
OD.....Outside Diameter
ORB..... O-Ring Boss
ORFS.....O-Ring Face Seal
OZ (oz).....Ounces
PG.....Page
PN.....Part Number
QT(qt.). .....Quarts
QTY.....Quantity
REF.....Reference
REV.....Revision Level
RH.....Right Hand
SAE.....Society of Automotive Engineers
SN..... ..Serial Number
SPEC(S).....Specifications
T/T.....Turntable
UGM.....Universal Ground Module
V.....Volts
W.....Watts
#.....Number

10) ILLUSTRATION REFERANCE LETTERS

When necessary, illustrations may contain reference letters that are intended to track information (i. e. hoses, harnesses) from one point to another or to track visual enlargement of components to show details that may be located in another area on the illustration.

Note: Due to continuous product improvements, JLG Industries, Inc. reserves the right to make specification changes without prior notification. Contact JLG Industries, Inc. for updated information.

TABLE OF CONTENTS

SECTION 1 - FRAME 13

FIGURE 1-1. AXLE INSTALLATION - OSCILLATING 14
FIGURE 1-2. AXLE INSTALLATION - OSCILLATING WITH TOW PACKAGE 16
FIGURE 1-3. STEER INSTALLATION - 2WS 18
FIGURE 1-4. STEER INSTALLATION - 2WS WITH TOW PACKAGE 20
FIGURE 1-5. WHEEL DRIVE AND FRAME VALVES INSTALLATION - 4WD/2WS 22
FIGURE 1-6. DRIVE HUB/BRAKE ASSEMBLY 24
FIGURE 1-7. DRIVE MOTOR ASSEMBLY - 4WD 26
FIGURE 1-8. TIRE AND WHEEL INSTALLATION 18-625 NHS FOAM-FILLED TIRE 28
FIGURE 1-9. TIRE AND WHEEL INSTALLATION 18-625 NHS FOAM-FILLED NON-MARKING TIRE 30
FIGURE 1-10. TIRE AND WHEEL INSTALLATION 18-625 NHS FOAM-FILLED SAND TIRE 32
FIGURE 1-11. LP TANK BRACKETS INSTALLATIONS 34
FIGURE 1-12. FRAME SHIELDS INSTALLATION - 2WS 36
FIGURE 1-13. TOW PACKAGE INSTALLATION - 2WS (ENGLISH LANGUAGE DECALS) 38
FIGURE 1-14. TOW PACKAGE INSTALLATION - 2WS (CE & UK CA SPECS) 40
FIGURE 1-15. TOW BAR ASSEMBLY 42

SECTION 2 - TURNTABLE 45

FIGURE 2-1. CONTROL VALVES INSTALLATION - WITH 2WS 46
FIGURE 2-2. CONTROL VALVE ASSEMBLY - 2WS MACHINES 48
FIGURE 2-3. SWING DRIVE INSTALLATION 52
FIGURE 2-4. SWING MOTOR/HUB ASSEMBLY 54
FIGURE 2-5. TURNTABLE BEARING INSTALLATION 58
FIGURE 2-6. TURNTABLE LOCK INSTALLATION 60
FIGURE 2-7. ROTARY COUPLING INSTALLATION - 2WS MACHINES 62
FIGURE 2-8. TANK INSTALLATION - DIESEL (STEEL)(47.8 GAL) 64
FIGURE 2-9. TANK INSTALLATION - DIESEL MACHINE (25 GAL) 66
FIGURE 2-10. TANK INSTALLATION - DIESEL MACHINE (FUEL TANK WITHOUT SIGHT GLASS) 68
FIGURE 2-11. TANK INSTALLATION - DIESEL MACHINE (FUEL TANK WITH SIGHT GLASS) 70
FIGURE 2-12. TANK INSTALLATION - DIESEL ENGINE (47.8 GAL) 72
FIGURE 2-13. TANK INSTALLATION - DIESEL ENGINE (25 GAL) 74
FIGURE 2-14. TANK INSTALLATION - GAS ENGINE (47.8 GAL) 76
FIGURE 2-15. TANK INSTALLATION - GAS ENGINES 78
FIGURE 2-16. TANK INSTALLATION - GAS ENGINES (25 GAL) 80
FIGURE 2-17. HYDRAULIC TANK ASSEMBLY 82
FIGURE 2-18. HYDRAULIC TANK ASSEMBLY (25 GAL) 84
FIGURE 2-19. HYDRAULIC TANK ASSEMBLY (47.8 GAL) 86
FIGURE 2-20. AUXILIARY POWER INSTALLATION - WITHOUT BATTERY DISCONNECT 88
FIGURE 2-21. AUXILIARY POWER INSTALLATION - WITH BATTERY DISCONNECT 90
FIGURE 2-22. AUXILIARY POWER PUMP/MOTOR ASSEMBLY 92
FIGURE 2-23. GROUND CONTROL BOX ASSEMBLY - WITH DEUTZ D2011 ENGINES - WITH DIGITAL DISPLAY (ANSI EXPORT LRC AND AUSTRALIAN SPECS) 94
FIGURE 2-24. GROUND CONTROL BOX ASSEMBLY - WITH DEUTZ D2011 ENGINES - WITH MECHANICAL HOUR METER (ANSI EXPORT LRC AND AUSTRALIAN SPECS) 98
FIGURE 2-25. GROUND CONTROL BOX ASSEMBLY - WITH DEUTZ D2011 AND TOWER STOW - WITH DIGITAL DISPLAY (ANSI EXPORT LRC AND AUSTRALIAN SPECS) 102
FIGURE 2-26. GROUND CONTROL BOX ASSEMBLY - WITH DEUTZ D2011 AND TOWER STOW - WITH MECHANICAL HOUR METER (ANSI EXPORT LRC AND AUSTRALIAN SPECS) 106
FIGURE 2-27. GROUND CONTROL BOX ASSEMBLY - WITH DEUTZ D2011 ENGINES (CE & UK CA SPECS) 110
FIGURE 2-28. GROUND CONTROL BOX ASSEMBLY - WITH DEUTZ D2011 ENGINES AND WITH TOWER STOW (CE & UK CA LRC SPECS) 114
FIGURE 2-29. GROUND CONTROL BOX ASSEMBLY - WITH DEUTZ TD2.9L4 ENGINES - WITH DIGITAL DISPLAY (ANSI, ANSI EXPORT, CSA, CHINA & JAPANESE SPECS) 118
FIGURE 2-30. GROUND CONTROL BOX ASSEMBLY - WITH DEUTZ TD2.9L4 ENGINES - WITH MECHANICAL HOUR METER (ANSI, ANSI EXPORT, CSA, CHINA & JAPANESE SPECS) 122
FIGURE 2-31. GROUND CONTROL BOX ASSEMBLY - WITH DEUTZ TD2.9L4 AND TOWER STOW - WITH DIGITAL DISPLAY (ANSI, ANSI EXPORT, CSA, CHINA & JAPANESE SPECS) 126
FIGURE 2-32. GROUND CONTROL BOX ASSEMBLY - WITH DEUTZ TD2.9L4 AND TOWER STOW - WITH MECHANICAL HOUR METER (ANSI, ANSI EXPORT, CSA, CHINA & JAPANESE SPECS) 130
FIGURE 2-33. GROUND CONTROL BOX ASSEMBLY - WITH DEUTZ TD2.9L4 (STAGE V) ENGINES (CE & UK CA SPECS) 134
FIGURE 2-34. GROUND CONTROL BOX ASSEMBLY - WITH DEUTZ TD2.9L4 (STAGE V) ENGINES AND WITH TOWER STOW (CE & UK CA SPECS) 138
FIGURE 2-35. GROUND CONTROL BOX ASSEMBLY - WITH FORD ENGINES - WITH DIGITAL DISPLAY 142

TABLE OF CONTENTS

FIGURE 2-36. GROUND CONTROL BOX ASSEMBLY - WITH FORD ENGINES - WITH MECHANICAL HOUR METER 146
FIGURE 2-37. GROUND CONTROL BOX ASSEMBLY - WITH FORD ENGINES AND TOWER STOW - WITH DIGITAL DISPLAY 150
FIGURE 2-38. GROUND CONTROL BOX ASSEMBLY - WITH FORD ENGINES AND TOWER STOW - WITH MECHANICAL HOUR METER 154
FIGURE 2-39. LIGHT PANEL INSTALLATION 158
FIGURE 2-40. ALARM INSTALLATION 160
FIGURE 2-41. WHITE NOISE ALARM INSTALLATION - ADJUSTABLE AMBIENT 162
FIGURE 2-42. WHITE NOISE MOTION ALARM INSTALLATION - AMBIENT 164
FIGURE 2-43. STROBE LIGHT INSTALLATION (AMBER) 166
FIGURE 2-44. STROBE LIGHT INSTALLATION (BLUE) 168
FIGURE 2-45. STROBE LIGHT INSTALLATION (RED) 170
FIGURE 2-46. HOODS INSTALLATION - ABS (DEUTZ D2011 ENGINES) 172
FIGURE 2-47. HOODS INSTALLATION - ABS (DEUTZ TD2.9L4 ENGINES) 176
FIGURE 2-48. HOODS INSTALLATION - ABS (DEUTZ TD2.9L4 (STAGE V) ENGINES) 180
FIGURE 2-49. HOODS INSTALLATION - STEEL (DEUTZ D2011 ENGINES) 184
FIGURE 2-50. HOODS INSTALLATION - STEEL (DEUTZ TD2.9L4 ENGINES) 188
FIGURE 2-51. HOODS INSTALLATION - STEEL (FORD ENGINES) 192
FIGURE 2-52. EXHAUST COVER AND HEAT SHIELDS INSTALLATION - STEEL HOODS (DEUTZ D2011 ENGINES) 196
FIGURE 2-53. EXHAUST COVER AND HEAT SHIELDS INSTALLATION - STEEL HOODS (DEUTZ TD2.9L4 ENGINES) 198
FIGURE 2-54. EXHAUST COVER INSTALLATION - STEEL HOODS (FORD ENGINES) 200
FIGURE 2-55. SKYAIR AIR COMPRESSOR INSTALLATION 202
FIGURE 2-56. SKYAIR AIR COMPRESSOR INSTALLATION 204
FIGURE 2-57. AIR COMPRESSOR ASSEMBLY 206

SECTION 3 - ENGINE 209

FIGURE 3-1. DEUTZ D2011 ENGINE INSTALLATION (WITHOUT ARCTIC PACKAGE) 210
FIGURE 3-2. DEUTZ D2011 ENGINE INSTALLATION (WITH ARCTIC PACKAGE) 212
FIGURE 3-3. DEUTZ D2011 ENGINE AND PUMP SUB-ASSEMBLY (WITHOUT ARCTIC PACKAGE) 216
FIGURE 3-4. DEUTZ D2011 ENGINE AND PUMP SUB-ASSEMBLY (WITH ARCTIC PACKAGE) 218
FIGURE 3-5. DEUTZ D2011 ENGINE ASSEMBLY (WITHOUT ARCTIC PACKAGE) 220
FIGURE 3-6. DEUTZ D2011 ENGINE ASSEMBLY (WITH ARCTIC PACKAGE) 224
FIGURE 3-7. DEUTZ D2011 ENGINE COMPONENTS 228
FIGURE 3-8. DEUTZ TD2.9L4 ENGINE INSTALLATION (WITHOUT ARCTIC PACKAGE) 232
FIGURE 3-9. DEUTZ TD2.9L4 ENGINE INSTALLATION (WITH ARCTIC PACKAGE) 236
FIGURE 3-10. DEUTZ TD2.9L4 ENGINE INSTALLATION (STAGE V) 240
FIGURE 3-11. DEUTZ TD2.9L4 ENGINE INSTALLATION (CHINA III SPECS) 244
FIGURE 3-12. DEUTZ TD2.9L4 ENGINE AND PUMP SUB-ASSEMBLY (WITHOUT ARCTIC PACKAGE) 248
FIGURE 3-13. DEUTZ TD2.9L4 ENGINE AND PUMP SUB-ASSEMBLY (WITH ARCTIC PACKAGE) 250
FIGURE 3-14. DEUTZ TD2.9L4 ENGINE AND PUMP SUB-ASSEMBLY (STAGE V) 252
FIGURE 3-15. DEUTZ TD2.9L4 ENGINE AND PUMP SUB-ASSEMBLY (CHINA III SPECS) 254
FIGURE 3-16. DEUTZ TD2.9L4 ENGINE ASSEMBLY (WITHOUT ARCTIC PACKAGE) 256
FIGURE 3-17. DEUTZ TD2.9L4 ENGINE ASSEMBLY (WITH ARCTIC PACKAGE) 262
FIGURE 3-18. DEUTZ TD2.9L4 ENGINE ASSEMBLY (STAGE V) 268
FIGURE 3-19. DEUTZ TD2.9L4 ENGINE ASSEMBLY (CHINA III SPECS) 274
FIGURE 3-20. DEUTZ TD2.9L4 ENGINE COMPONENTS 280
FIGURE 3-21. DEUTZ TD2.9L4 ENGINE COMPONENTS (STAGE V) 284
FIGURE 3-22. DEUTZ TD2.9L4 ENGINE COMPONENTS (CHINA III SPECS) 288
FIGURE 3-23. FUEL PUMP/FILTER BRACKET ASSEMBLY (DEUTZ TD2.9L4 ENGINES) 292
FIGURE 3-24. FUEL PUMP/FILTER BRACKET ASSEMBLY (DEUTZ TD2.9L4 (STAGE V) ENGINES) 294
FIGURE 3-25. FUEL PUMP/FILTER BRACKET ASSEMBLY (DEUTZ TD2.9L4 ENGINES) (CHINA III SPECS) 296
FIGURE 3-26. BREATHER HEATER INST (DEUTZ TD2.9L4 ENGINES) 298
FIGURE 3-27. FORD ENGINE INSTALLATION (WITHOUT ARCTIC PACKAGE) 300
FIGURE 3-28. FORD ENGINE INSTALLATION (WITH ARCTIC PACKAGE) 304
FIGURE 3-29. FORD ENGINE AND PUMP SUB-ASSEMBLY (WITHOUT ARCTIC PACKAGE) 308
FIGURE 3-30. FORD ENGINE AND PUMP SUB-ASSEMBLY (WITH ARCTIC PACKAGE) 310
FIGURE 3-31. FORD ENGINE ASSEMBLY (WITHOUT ARCTIC PACKAGE) 312
FIGURE 3-32. FORD ENGINE ASSEMBLY (WITH ARCTIC PACKAGE) 318
FIGURE 3-33. FORD ENGINE PREP ASSEMBLY 324
FIGURE 3-34. FORD ENGINE BRACKETS AND EXHAUST MANIFOLD INSTALLATION 326
FIGURE 3-35. FORD ENGINE DRIVE BELT INSTALLATION (MACHINES WITHOUT GENERATOR) 328
FIGURE 3-36. FORD ENGINE COMPONENTS 330
FIGURE 3-37. PUMP COUPING KIT (DEUTZ ENGINES) 334
FIGURE 3-38. HYDROSTATIC PUMP ASSEMBLY 336
FIGURE 3-39. VARIABLE PUMP ASSEMBLY 338
FIGURE 3-40. EXHAUST PIPE INSTALLATION - DEUTZ TD2.9L4 ENGINES 342

FIGURE 3-41. EXHAUST PIPE INSTALLATION - DEUTZ TD2.9L4 (STAGE V) ENGINES 344
FIGURE 3-42. EXHAUST PIPE INSTALLATION - FORD ENGINES 346
FIGURE 3-43. SPARK ARRESTOR MUFFLER INSTALLATION - DEUTZ D2011 ENGINES 348
FIGURE 3-44. FUEL-WATER SEPARATOR INSTALLATION - DEUTZ D2011 ENGINES 350
FIGURE 3-45. FUEL-WATER SEPARATOR INSTALLATION - DEUTZ TD2.9L4 ENGINES 352
FIGURE 3-46. RIGHT ENGINE SUPPORT INSTALLATION (DEUTZ D2011 ENGINES MACHINES WITHOUT GENERATORS) 354
FIGURE 3-47. RIGHT ENGINE SUPPORT INSTALLATION (DEUTZ D2011 ENGINES MACHINES WITH GENERATORS) 356
FIGURE 3-48. ENGINE HOOD BAFFLE INSTALLATION - DEUTZ TD2.9L4 ENGINES AND DEUTZ TD2.9L4 (STAGE V) ENGINES WITH ABS HOODS 358
FIGURE 3-49. ENGINE HOOD BAFFLE INSTALLATION - DEUTZ TD2.9L4 ENGINES WITH STEEL HOODS 360
FIGURE 3-50. ENGINE TRAY JACK INSTALLATION - DEUTZ ENGINES 362
FIGURE 3-51. ENGINE TRAY JACK INSTALLATION - FORD ENGINES 364
FIGURE 3-52. 2500W/110V/60HZ GENERATOR INSTALLATION - DEUTZ D2011 ENGINES 366
FIGURE 3-53. 2500W/110V/60HZ GENERATOR INSTALLATION - DEUTZ TD2.9L4 ENGINES 368
FIGURE 3-54. 2500W/110V/60HZ GENERATOR INSTALLATION - FORD ENGINES 372
FIGURE 3-55. 2500W/220V/50HZ GENERATOR INSTALLATION - DEUTZ D2011 ENGINES 376
FIGURE 3-56. 4000W/50HZ GENERATOR INSTALLATION - DEUTZ D2011 ENGINES 378
FIGURE 3-57. 4000W/50HZ GENERATOR INSTALLATION - DEUTZ TD2.9L4 ENGINES AND DEUTZ TD2.9L4 (STAGE V) ENGINES 382
FIGURE 3-58. 4000W/60HZ GENERATOR INSTALLATION - DEUTZ D2011 ENGINES 386
FIGURE 3-59. 4000W/60HZ GENERATOR INSTALLATION - DEUTZ TD2.9L4 ENGINES 390
FIGURE 3-60. 7500W/50HZ SKYPOWER GENERATOR INSTALLATION - DEUTZ D2011 ENGINES 394
FIGURE 3-61. 7500W/50HZ SKYPOWER GENERATOR INSTALLATION - DEUTZ TD2.9L4 ENGINES AND DEUTZ TD2.9L4 (STAGE V) ENGINES 398
FIGURE 3-62. 7500W/60HZ SKYPOWER GENERATOR INSTALLATION - DEUTZ D2011 ENGINES 402
FIGURE 3-63. 7500W/60HZ SKYPOWER GENERATOR INSTALLATION - DEUTZ TD2.9L4 ENGINES 406
FIGURE 3-64. 7500W/60HZ SKYPOWER GENERATOR INSTALLATION - FORD ENGINES 410

SECTION 4 - BOOM 415

FIGURE 4-1. BOOM AND CYLINDER INSTALLATION 416
FIGURE 4-2. MAIN BOOM ASSEMBLY 418
FIGURE 4-3. TOWER BOOM ASSEMBLY 420
FIGURE 4-4. JIB ASSEMBLY 422
FIGURE 4-5. ROTATOR ASSEMBLY 424
FIGURE 4-6. SUPPORT, PLATFORM INSTALLATION 426
FIGURE 4-7. POWER TRACK INSTALLATION - MAIN BOOM 428
FIGURE 4-8. POWER TRACK INSTALLATION - TOWER BOOM 430
FIGURE 4-9. CONTROL VALVES INSTALLATION - WITH 2WS 432
FIGURE 4-10. CONTROL VALVE ASSEMBLY 434
FIGURE 4-11. BOOM VALVES AND PROXIMITY SWITCHES INSTALLATION 436
FIGURE 4-12. BOOM VALVES AND PROXIMITY SWITCHES INSTALLATION WITH TOWER STOW 440

SECTION 5 - PLATFORM 443

FIGURE 5-1. PLATFORM ASSEMBLY WITH DROP-BAR - 30IN X 3FT (76CM X 1M) 444
FIGURE 5-2. PLATFORM ASSEMBLY WITH GATE - 30IN X 4FT (76CM X 1.22M) 446
FIGURE 5-3. PLATFORM ASSEMBLY WITH DROP-BAR - 30IN X 4FT (76CM X 1.22M) 448
FIGURE 5-4. PLATFORM ASSEMBLY WITH GATE - 30IN X 6FT (76CM X 1.83M) 450
FIGURE 5-5. PLATFORM ASSEMBLY WITH GATE- 36IN X 6FT (91.5CM X 1.83M) 452
FIGURE 5-6. PLATFORM ASSEMBLY WITH DROP-BAR - 30IN X 6FT (76CM X 1.83M) 454
FIGURE 5-7. PLATFORM ASSEMBLY WITH DROP-BAR - 36IN X 6FT (91.5CM X 1.83M) 456
FIGURE 5-8. PLATFORM ASSEMBLY WITH 1 GATE / 2 DROP BARS (TRI-ENTRY) - 36IN X 6FT (91.5CM X 1.83M) 458
FIGURE 5-9. PLATFORM ASSEMBLY WITH 3 DROP BARS (TRI-ENTRY) - 36IN X 6FT (91.5CM X 1.83M) 460
FIGURE 5-10. PLATFORM ASSEMBLY WITH FALL ARREST (6FT) 462
FIGURE 5-11. PLATFORM ASSEMBLY WITH GATE - 36IN X 8FT (91.5CM X 2.44M) 464
FIGURE 5-12. PLATFORM ASSEMBLY WITH DROP-BAR - 36IN X 8FT (91.5CM X 2.44M) 466
FIGURE 5-13. PLATFORM ASSEMBLY WITH 1 GATE / 2 DROP BARS (TRI-ENTRY) - 36IN X 8FT (91.5CM X 2.44M) 468
FIGURE 5-14. PLATFORM ASSEMBLY WITH 3 DROP BARS (TRI-ENTRY) - 36IN X 8FT (91.5CM X 2.44M) 470
FIGURE 5-15. PLATFORM ASSEMBLY WITH FALL ARREST (8FT) 472
FIGURE 5-16. CONSOLE AND FOOT SWITCH INSTALLATION 474
FIGURE 5-17. CONSOLE AND FOOT SWITCH INSTALLATION WITH TOWER STOW 476
FIGURE 5-18. CONSOLE BOX ASSEMBLY WITH FOOTSWITCH 478
FIGURE 5-19. CONSOLE BOX ASSEMBLY WITH FOOTSWITCH WITH TOWER STOW 482
FIGURE 5-20. LIGHT PANEL INSTALLATION 486
FIGURE 5-21. FOOTSWITCH ASSEMBLY 488

TABLE OF CONTENTS

FIGURE 5-22. CONTROLLER ASSEMBLY- DRIVE/STEER....490
FIGURE 5-23. CONTROLLER ASSEMBLY - LIFT/SWING....492
FIGURE 5-24. JIB SWITCH INSTALLATION....496
FIGURE 5-25. SKYEYE INSTALLATION....498
FIGURE 5-26. SKYGUARD BAR INSTALLATION....500
FIGURE 5-27. SKYLINE INSTALLATION....502
FIGURE 5-28. STORAGE TRAY INSTALLATION - CENTER....504
FIGURE 5-29. MANUAL STORAGE BOX INSTALLATION....506
FIGURE 5-30. SKYCUTTER INSTALLATION....508
FIGURE 5-31. SKYWELDER/SKYCUTTER COMBO INSTALLATION (60HZ)....510
FIGURE 5-32. PLASMA CUTTER ASSEMBLY....514
FIGURE 5-33. SKYWELDER INSTALLATION (50HZ)....516
FIGURE 5-34. SKYWELDER INSTALLATION (60HZ)....518
FIGURE 5-35. WELDER ASSEMBLY....520
FIGURE 5-36. SKYWELDER PREP PACKAGE (60HZ)....522
FIGURE 5-37. SKYWELDER LOCKING BRACKET INSTALLATION (OPTIONAL)....524
FIGURE 5-38. SKYGLAZIER INSTALLATION (ALL SPECS EXCEPT CHINA AND JAPANESES SPECS)....526
FIGURE 5-39. SKYGLAZIER INSTALLATION (ENGLISH LANGUAGE DECALS)....528
FIGURE 5-40. PIPE RACKS INSTALLATION (ANSI AND CSA SPECS)....530
FIGURE 5-41. PIPE RACKS INSTALLATION (ANSI EXPORT SPECS)....532
FIGURE 5-42. PIPE RACKS INSTALLATION (AUSTRALIAN SPECS)....534
FIGURE 5-43. SOFT TOUCH SYSTEM INSTALLATION - 6FT/1.83M PLATFORM....536
FIGURE 5-44. SOFT TOUCH SYSTEM INSTALLATION - 6FT/1.83M FALL ARREST PLATFORM....538
FIGURE 5-45. SOFT TOUCH SYSTEM INSTALLATION - 8FT/2.44M PLATFORM....540
FIGURE 5-46. SOFT TOUCH SYSTEM INSTALLATION - 8FT/2.44M FALL ARREST PLATFORM....542
FIGURE 5-47. FALL ARREST INSTALLATION (BOLT-ON) 30IN X 4FT (76CM X 1.22M) PLATFORM....544
FIGURE 5-48. FALL ARREST INSTALLATION (BOLT-ON) 36IN X 6FT (91.2CM X 1.82M) PLATFORM....546
FIGURE 5-49. FALL ARREST INSTALLATION (BOLT-ON) 30IN X 6FT (76CM X 1.83M) PLATFORM....548
FIGURE 5-50. FALL ARREST INSTALLATION (BOLT-ON) 36IN X 8FT (91.5CM X 2.4M) PLATFORM....550
FIGURE 5-51. FALL ARREST INSTALLATION (BOLT-ON) 36IN X 6FT (91.5CM X 1.82M) TRI-ENTRY PLATFORM)....552
FIGURE 5-52. USB CHARGER INSTALLATION....554

SECTION 6 - CYLINDER....557

FIGURE 6-1. AXLE LOCKOUT CYLINDER ASSEMBLY....558
FIGURE 6-2. LEVEL CYLINDER ASSEMBLY - PLATFORM SLAVE....560
FIGURE 6-3. LEVEL CYLINDER ASSEMBLY - UPRIGHT....562
FIGURE 6-4. LIFT CYLINDER ASSEMBLY - JIB....564
FIGURE 6-5. LIFT CYLINDER ASSEMBLY - MAIN BOOM....566
FIGURE 6-6. LIFT CYLINDER ASSEMBLY - TOWER BOOM....568
FIGURE 6-7. MASTER CYLINDER ASSEMBLY....570
FIGURE 6-8. STEER CYLINDER ASSEMBLY....572
FIGURE 6-9. TELESCOPE CYLINDER ASSEMBLY - MAIN BOOM....574
FIGURE 6-10. TELESCOPE CYLINDER ASSEMBLY - TOWER BOOM....576

SECTION 7 - HYDRAULIC....579

FIGURE 7-1. HYDRAULIC DIAGRAM - AXLE (OSCILLATING)....580
FIGURE 7-2. HYDRAULIC DIAGRAM - DRIVE (4WD/2WS WITHOUT TOW PACKAGE/WITHOUT ARCTIC PACKAGE)....582
FIGURE 7-3. HYDRAULIC DIAGRAM - DRIVE (4WD/2WS WITHOUT TOW PACKAGE/WITH ARCTIC PACKAGE)....588
FIGURE 7-4. HYDRAULIC DIAGRAM - DRIVE (4WD/2WS WITH TOW PACKAGE/WITHOUT ARCTIC PACKAGE)....594
FIGURE 7-5. HYDRAULIC DIAGRAM - DRIVE (4WD/2WS WITH TOW PACKAGE/WITH ARCTIC PACKAGE)....600
FIGURE 7-6. HYDRAULIC DIAGRAM - STANDARD (Prior to SN 0300285430)....606
FIGURE 7-7. HYDRAULIC DIAGRAM - STANDARD (SN 0300285430 to Present)....610

SECTION 8 - ELECTRICAL....615

FIGURE 8-1. 800AJ HC3 ELECTRICAL LAYOUT....616
FIGURE 8-2. AC BOX AT PLATFORM INSTALLATION - 110V GFI RECEPTACLE (ALL SPECS EXCEPT AUSTRALIAN, CE & UK CA SPECS)....630
FIGURE 8-3. AC BOX AT PLATFORM INSTALLATION - 220V (ANSI, CSA & JAPANESE SPECS)....632
FIGURE 8-4. AC BOX AT PLATFORM MID-BOOM PLUG INSTALLATION (WITH 4000W/60HZ GENERATOR) (ANSI, ANSI EXPORT, CHINA, CSA & JAPANESE SPECS)....634
FIGURE 8-5. AC BOX AT PLATFORM MID-BOOM PLUG INSTALLATION (WITHOUT 7500W SKYPOWER GENERATOR) (ALL SPECS EXCEPT ANSI & CSA SPECS)....636
FIGURE 8-6. AC BOX AT PLATFORM MID-BOOM PLUG INSTALLATION (WITH 7500W SKYPOWER GENERATOR)....638

FIGURE 8-7. AC BOX AT PLATFORM INSTALLATION - 110V IEC YELLOW (CE & UK CA SPECS) (MACHINES WITH 2500W GENERATOR OR NO GENERATOR OPTION) ... 640
FIGURE 8-8. AC BOX AT PLATFORM INSTALLATION - 110V IEC YELLOW (CE & UK CA SPECS) (MACHINES WITH 4000W GENERATOR) ... 642
FIGURE 8-9. AC BOX AT PLATFORM INSTALLATION - 220V IEC BLUE (CE & UK CA SPECS) (MACHINES WITH 2500W GENERATOR OR NO GENERATOR OPTION) ... 644
FIGURE 8-10. AC BOX AT PLATFORM INSTALLATION - 220V IEC BLUE (CE & UK CA SPECS) (MACHINES WITH 4000W GENERATOR) ... 646
FIGURE 8-11. AC BOX AT PLATFORM INSTALLATION - 220V CEE7 POST GROUND (CE & UK CA SPECS) (MACHINES WITH 2500W GENERATOR OR NO GENERATOR OPTION) ... 648
FIGURE 8-12. AC BOX AT PLATFORM INSTALLATION - 220V CEE7 POST GROUND (CE & UK CA SPECS) (MACHINES WITH 4000W GENERATOR) ... 650
FIGURE 8-13. AC BOX AT PLATFORM INSTALLATION - 220V CEE7 SIDE GROUND (CE & UK CA SPECS) (MACHINES WITH 2500W GENERATOR OR NO GENERATOR OPTION) ... 652
FIGURE 8-14. AC BOX AT PLATFORM INSTALLATION - 220V CEE7 SIDE GROUND (CE & UK CA SPECS) (MACHINES WITH 4000W GENERATOR) ... 654
FIGURE 8-15. AC BOX AT PLATFORM INSTALLATION - 220V AFSINT 107 KEYED GROUND (CE & UK CA SPECS) (MACHINES WITH 2500W GENERATOR OR NO GENERATOR OPTION) ... 656
FIGURE 8-16. AC BOX AT PLATFORM INSTALLATION - 220V AFSINT 107 KEYED GROUND (CE & UK CA SPECS) (MACHINES WITH 4000W GENERATOR) ... 658
FIGURE 8-17. AC BOX AT PLATFORM INSTALLATION - 220V (2X4 BOX & COVER ONLY - LOCALLY SUPPLIED RECEPTACLE) (4000W GENERATOR) ... 660
FIGURE 8-18. AC BOX AT PLATFORM INSTALLATION - 240V GFCI RECEPTACLE (ANSI AND CSA SPECS WITH 4000W SKYPOWER GENERATOR) ... 662
FIGURE 8-19. AC BOX AT PLATFORM INSTALLATION - 240V GFCI RECEPTACLE (ANSI AND CSA SPECS WITH 7500W SKYPOWER GENERATOR) ... 664
FIGURE 8-20. AC BREAKER BOX INSTALLATION - WITH 3 BREAKERS (CE & UK CA SPECS WITH 4000W GENERATOR) ... 666
FIGURE 8-21. BEACON CONTROL HARNESS (BLUE AND RED STROBE LIGHTS) ... 668
FIGURE 8-22. BATTERY DISCONNECT ... 670
FIGURE 8-23. BOOM CABLES INSTALLATION - WITH 2500W GENERATOR ... 672
FIGURE 8-24. BOOM CABLES INSTALLATION - WITH 4000W GENERATOR (50HZ) ... 674
FIGURE 8-25. BOOM CABLES INSTALLATION - WITH 4000W GENERATOR (60HZ) ... 676
FIGURE 8-26. BOOM CABLES INSTALLATION - WITH 7500W SKYPOWER GENERATOR ... 678
FIGURE 8-27. BOOM CABLE - MAIN BOOM ... 680
FIGURE 8-28. BOOM CABLE (TOWER BOOM) ... 682
FIGURE 8-29. BOOM VALVE HARNESS ... 684
FIGURE 8-30. BREAKER BOX INSTALLATION (BRAZIL SPECS) ... 686
FIGURE 8-31. BREAKER BOX INSTALLATION (CE & UK CA SPECS WITHOUT 4000W GENERATOR) ... 688
FIGURE 8-32. BREAKER BOX KIT - ONE DOUBLE 16AMP BREAKER (BRAZIL, CE & UK CA SPECS WITHOUT 4000W GENERATOR) ... 690
FIGURE 8-33. BREAKER BOX KIT - WITH 3 BREAKERS (CE & UK CA SPECS WITH 4000W GENERATOR) ... 692
FIGURE 8-34. BREAKER BOX KIT - ONE DOUBLE 16AMP BREAKER (CE & UK CA SPECS WITH 4000W GENERATOR) ... 694
FIGURE 8-35. ENGINE HARNESS - DEUTZ D2011 ENGINES ... 696
FIGURE 8-36. ENGINE HARNESS - DEUTZ TD2.9L4 ENGINES ... 698
FIGURE 8-37. ENGINE HARNESS - DEUTZ TD2.9L4 ENGINES AND DEUTZ TD2.9L4 (STAGE V PRE-BUY) ENGINES ... 700
FIGURE 8-38. ENGINE HARNESS - DEUTZ TD2.9L4 (STAGE V) ENGINES ... 704
FIGURE 8-39. ENGINE HARNESS - FORD ENGINES ... 708
FIGURE 8-40. FUEL PUMP HARNESS - DEUTZ TD2.9L4 ENGINES ... 710
FIGURE 8-41. FUEL HARNESS - DEUTZ TD2.9L4 (STAGE V) ENGINE ... 712
FIGURE 8-42. GENERATOR HARNESS - 4000W GENERATOR ... 714
FIGURE 8-43. GENERATOR HARNESS - 7500W SKYPOWER GENERATOR ... 716
FIGURE 8-44. GENERATOR TO ENGINE HARNESS - 2500W (FORD ENGINES) ... 718
FIGURE 8-45. GENERATOR TO ENGINE HARNESS - 4000W (DEUTZ D2011 ENGINES) ... 720
FIGURE 8-46. GENERATOR TO ENGINE HARNESS - 4000W (DEUTZ TD2.9L4 ENGINES) ... 722
FIGURE 8-47. GENERATOR TO ENGINE HARNESS - 7500W SKYPOWER GENERATOR (DEUTZ D2011 ENGINES) ... 724
FIGURE 8-48. GENERATOR TO ENGINE HARNESS - 7500W SKYPOWER (FORD DF 2.5L ENGINES) ... 726
FIGURE 8-49. GENERATOR HARNESS - 7500W SKYPOWER (DEUTZ TD2.9L4 T4F ENGINES) ... 728
FIGURE 8-50. GENERATOR TO REAR OF BOOM HARNESS - 110V ... 730
FIGURE 8-51. GENERATOR TO REAR OF BOOM HARNESS - 220V ... 732
FIGURE 8-52. GROUND CONTROL BOX HARNESS ... 734
FIGURE 8-53. MID BOOM PROXIMITY SENSOR HARNESS ... 738
FIGURE 8-54. PLATFORM CONSOLE BOX HARNESS ... 740
FIGURE 8-55. RECEPTACLE BOX KIT - 110V IEC YELLOW (CE & UK CA SPECS) ... 742
FIGURE 8-56. RECEPTACLE BOX KIT - 220V IEC BLUE (CE & UK CA SPECS) ... 744
FIGURE 8-57. RECEPTACLE BOX KIT - 220V CEE7 POST GROUND 2X4 BOX (CE & UK CA SPEC) ... 746
FIGURE 8-58. RECEPTACLE BOX KIT - 220V CEE7 SIDE GROUND 2X4 BOX (CE & UK CA SPEC) ... 748

TABLE OF CONTENTS

FIGURE 8-59. RECEPTACLE BOX KIT - 220V AFSINT107 KEYED GROUND (CE & UK CA SPECS) 750
FIGURE 8-60. SKYEYE EMITTER HARNESS 752
FIGURE 8-61. SKYEYE INTERMEDIATE HARNESS 754
FIGURE 8-62. SKYEYE RECEIVER HARNESS 756
FIGURE 8-63. SKYLINE HARNESS 758
FIGURE 8-64. SKYGUARD INTERFACE HARNESS 760
FIGURE 8-65. TOWER STOW HARNESS 762
FIGURE 8-66. VALVE HARNESS 764
FIGURE 8-67. WHITE NOISE ALARM HARNESS 766

SECTION 9 - DECALS 769

FIGURE 9-1. DECAL INSTALLATION (ANSI SPECS) 770
FIGURE 9-2. DECAL INSTALLATION (AUSTRALIAN SPECS) 774
FIGURE 9-3. DECAL INSTALLATION (BRAZILIAN SPECS) 778
FIGURE 9-4. DECAL INSTALLATION (CE & UK CA SPECS) 782
FIGURE 9-5. DECAL INSTALLATION (CHINA SPECS) 786
FIGURE 9-6. DECAL INSTALLATION (CSA SPECS) 790
FIGURE 9-7. DECAL INSTALLATION (JAPANESE SPECS) 794
FIGURE 9-8. DECAL INSTALLATION (KOREAN SPECS) 798
FIGURE 9-9. DECAL INSTALLATION (LATIN AMERICAN SPECS) 802
FIGURE 9-10. DECAL INSTALLATION - OPTIONS 806
FIGURE 9-11. SKYCUTTER DECAL INSTALLATION 810
FIGURE 9-12. SKYWELDER DECAL INSTALLATION - 50HZ 812
FIGURE 9-13. DECAL INSTALLATION - SKYWELDER (60HZ) 814

SECTION 10 - RECOMMENDED SERVICE PARTS STOCK 817

FIGURE 10-1. RECOMMENDED SERVICE PARTS STOCK 818

SECTION 11 - SPECIAL OPTIONS/ACCESSORES/KITS 821

FIGURE 11-1. SPECIAL OPTIONS/ACCESSORES/KITS 822

PART NUMBER INDEX 827

SECTION 1 - FRAME

FIGURE 1-1. AXLE INSTALLATION - OSCILLATING

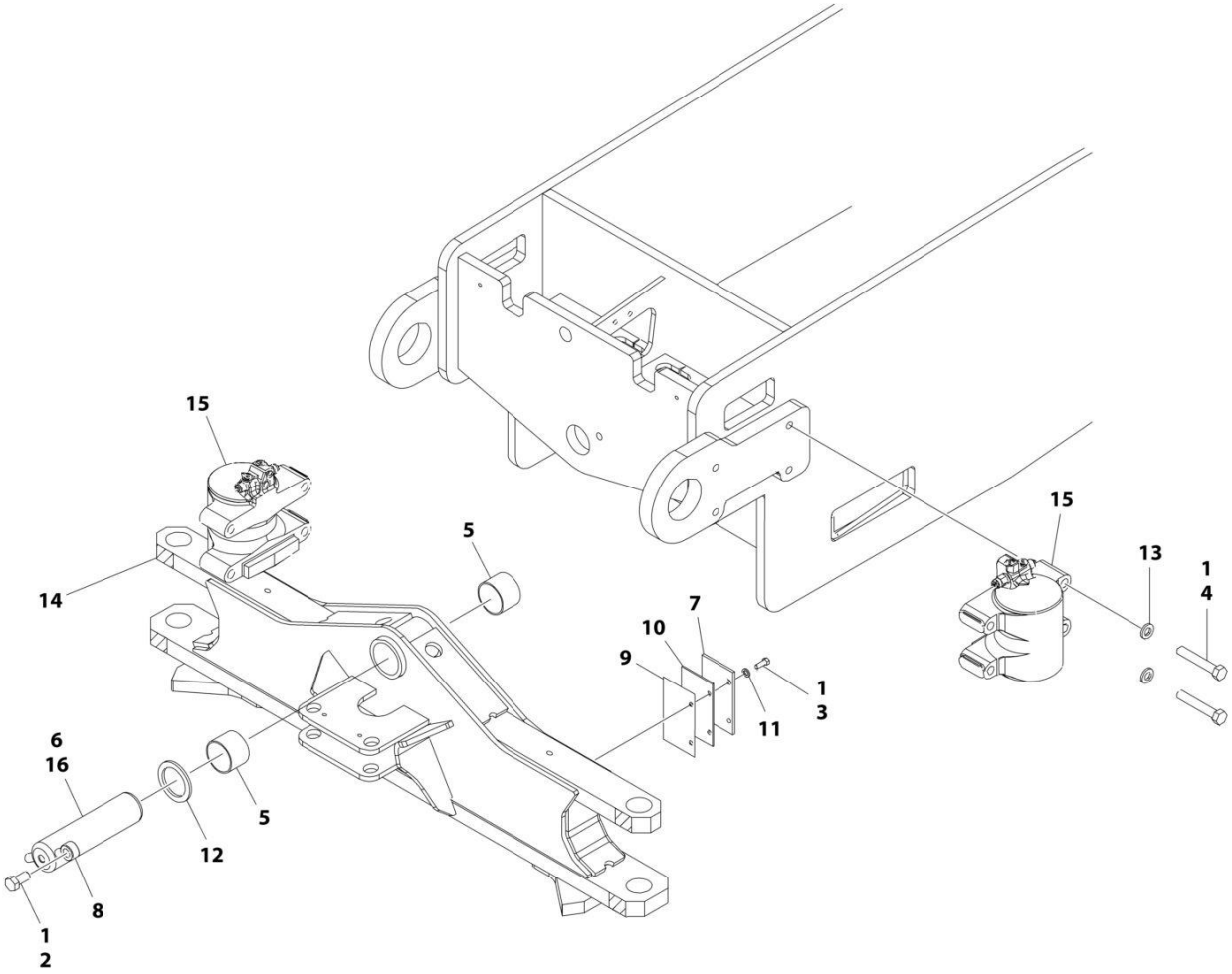

FIGURE 1-1. AXLE INSTALLATION - OSCILLATING

ITEM	PART NUMBER	QTY	DESCRIPTION	REV
	1001154584	Ref	AXLE INSTALLATION	D
1	0100011	AR	Compound, Locking	
2	0642212	1	Bolt 3/4 x 1-1/2	
3	0681608	4	Bolt 3/8 x 1 Grade 8	
4	0682236	8	Bolt 3/4 x 4-1/2 Grade 8	
5	0962102	2	Bushing	
6	3020039	AR	Lubricant	
7	3538047	2	Shim .25	
8	3841287	1	Keeper, Pin	
9	4070878	AR	Shim 16 Gauge	
10	4070879	AR	Shim 11 Gauge	
11	4711600	4	Washer 3/8	
12	4740472	1	Washer	
13	4892200	8	Washer 3/4	
14	1001152719	1	Axle	
15	1001204560	2	Axle Lockout Cylinder Assembly (See Separate Breakdown in CYLINDER SECTION)	
16	1001156710	1	Pin	

FIGURE 1-2. AXLE INSTALLATION - OSCILLATING WITH TOW PACKAGE

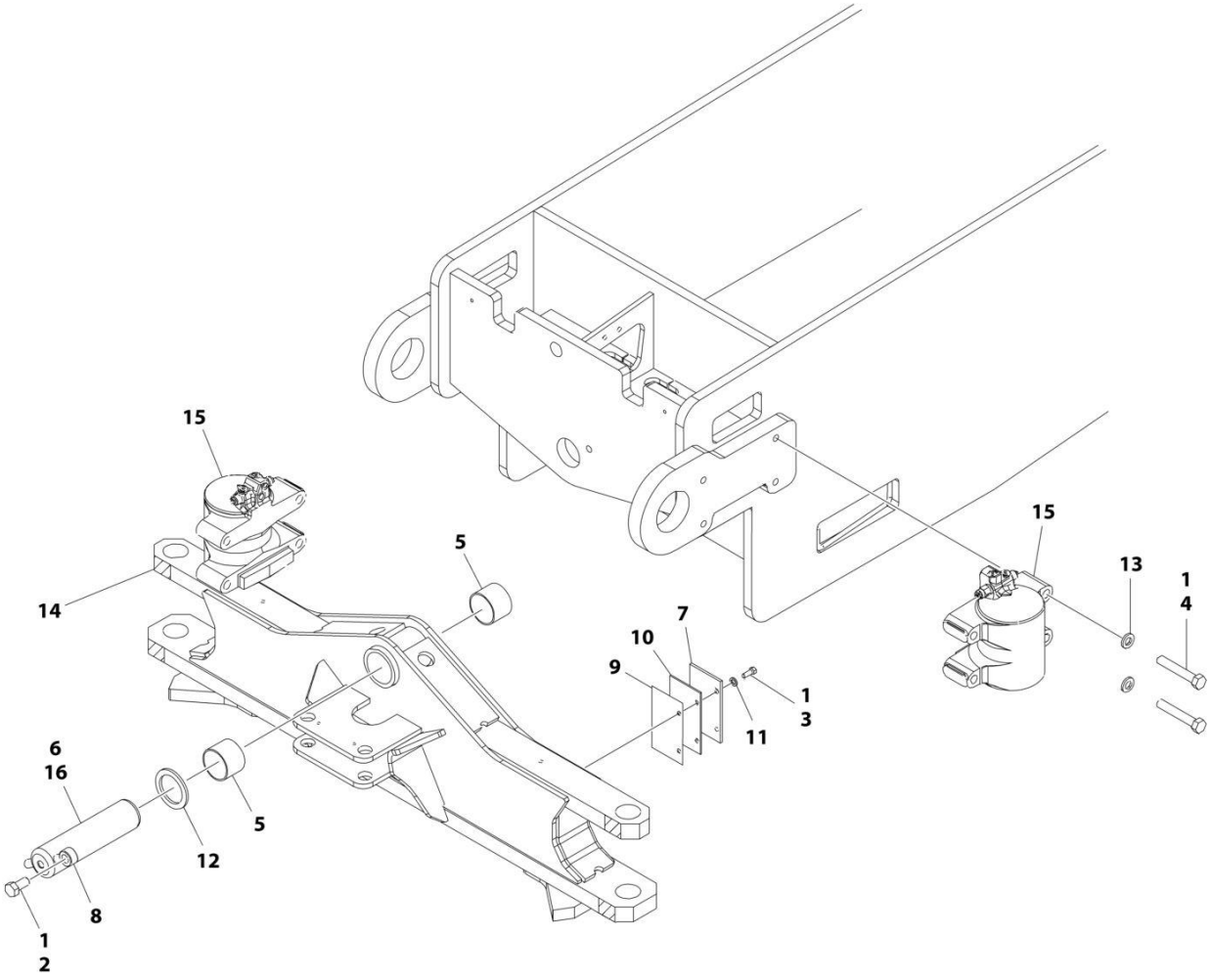

FIGURE 1-2. AXLE INSTALLATION - OSCILLATING WITH TOW PACKAGE

ITEM	PART NUMBER	QTY	DESCRIPTION	REV
	1001155194	Ref	AXLE INSTALLATION	D
1	0100011	AR	Compound, Locking	
2	0642212	1	Bolt 3/4 x 1-1/2	
3	0681608	4	Bolt 3/8 x 1 Grade 8	
4	0682236	8	Bolt 3/4 x 4-1/2 Grade 8	
5	0962102	2	Bushing	
6	3020039	AR	Lubricant	
7	3538047	2	Shim .25	
8	3841287	1	Keeper, Pin	
9	4070878	AR	Shim 16 Gauge	
10	4070879	AR	Shim 11 Gauge	
11	4711600	4	Washer 3/8	
12	4740472	1	Washer	
13	4892200	8	Washer 3/4	
14	1001154875	1	Axle	
15	1001204560	2	Axle Lockout Cylinder Assembly (See Separate Breakdown in CYLINDER SECTION)	
16	1001156710	1	Pin	

FIGURE 1-3. STEER INSTALLATION - 2WS

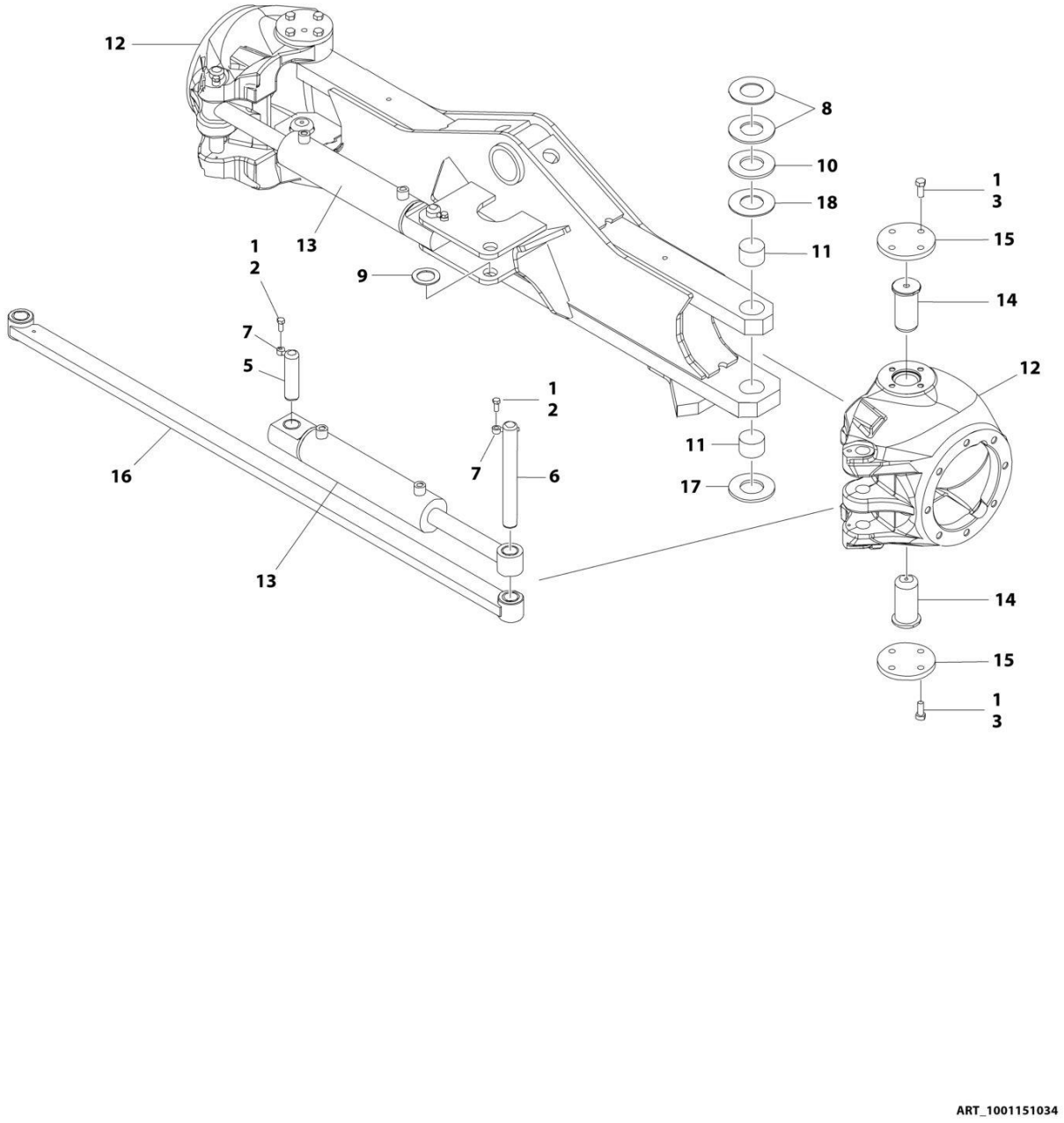

FIGURE 1-3. STEER INSTALLATION - 2WS

ITEM	PART NUMBER	QTY	DESCRIPTION	REV
	1001151034	Ref	STEER INSTALLATION	H
1	0100011	AR	Compound, Locking	
2	0641607	4	Bolt 3/8 x 7/8	
3	0641810	16	Bolt 1/2 x 1-1/4	
5	3422417	2	Pin	
6	3422790	2	Pin	
7	3841520	4	Keeper, Pin	
8	4740256	AR	Washer, Thrust	
9	4740473	2	Washer	
10	1001103810	AR	Washer, Thrust	
11	1001165657	4	Bearing	
12	1001150372	2	Spindle	
13	1001150539	2	Steer Cylinder Assembly (See Separate Breakdown in CYLINDER SECTION)	
14	1001161355	4	Kingpin	
15	1001150937	4	Plate	
16	1001151980	1	Tie-Rod	
17	1001161399	2	Washer, Thrust	
18	4740463	AR	Washer, Thrust	

FIGURE 1-4. STEER INSTALLATION - 2WS WITH TOW PACKAGE

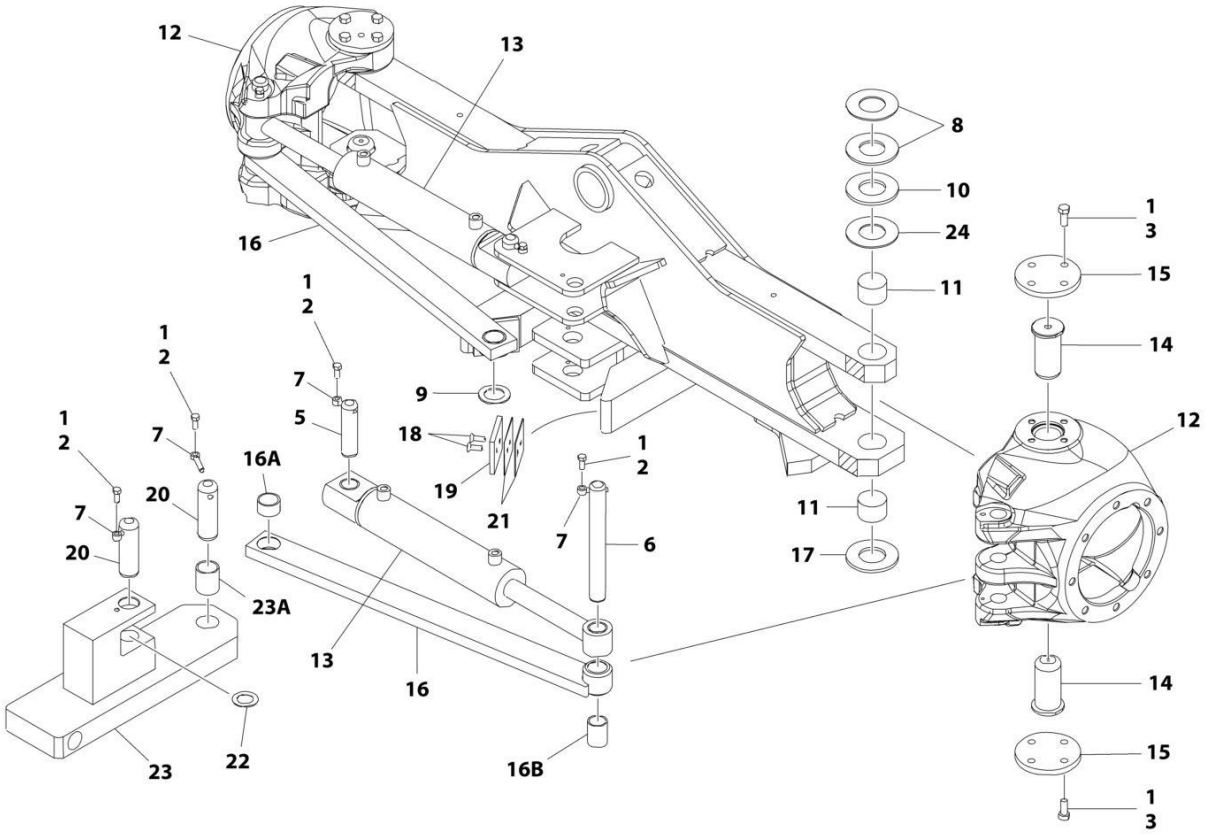

ART_1001155192

FIGURE 1-4. STEER INSTALLATION - 2WS WITH TOW PACKAGE

ITEM	PART NUMBER	QTY	DESCRIPTION	REV
	1001155192	Ref	STEER INSTALLATION	G
1	0100011	AR	Compound, Locking	
2	0641607	6	Bolt 3/8 x 7/8	
3	0641810	16	Bolt 1/2 x 1-1/4	
5	3422417	2	Pin	
6	3422790	2	Pin	
7	3841520	6	Keeper, Pin	
8	4740256	AR	Washer, Thrust	
9	4740473	2	Washer	
10	1001103810	AR	Washer, Thrust	
11	1001165657	4	Bearing	
12	1001150372	2	Spindle	
13	1001150539	2	Steer Cylinder Assembly (See Separate Breakdown in CYLINDER SECTION)	
14	1001161355	4	Kingpin	
15	1001150937	4	Plate	
16	1001154931	2	Tie-Rod	
16A	0962181	1	Bushing	
16B	0962152	1	Bushing	
17	1001161399	2	Washer, Thrust	
18	0741609	4	Screw 3/8 x 1-1/8	
19	3340966	2	Pad, Stop	
20	3422848	2	Pin, Hitch	
21	4071059	AR	Shim 16 Gauge	
22	4740155	3	Washer, Thrust	
23	1001155035	1	Link	
23A	0962348	1	Bushing	
24	4740463	AR	Washer, Thrust	

FIGURE 1-5. WHEEL DRIVE AND FRAME VALVES INSTALLATION - 4WD/2WS

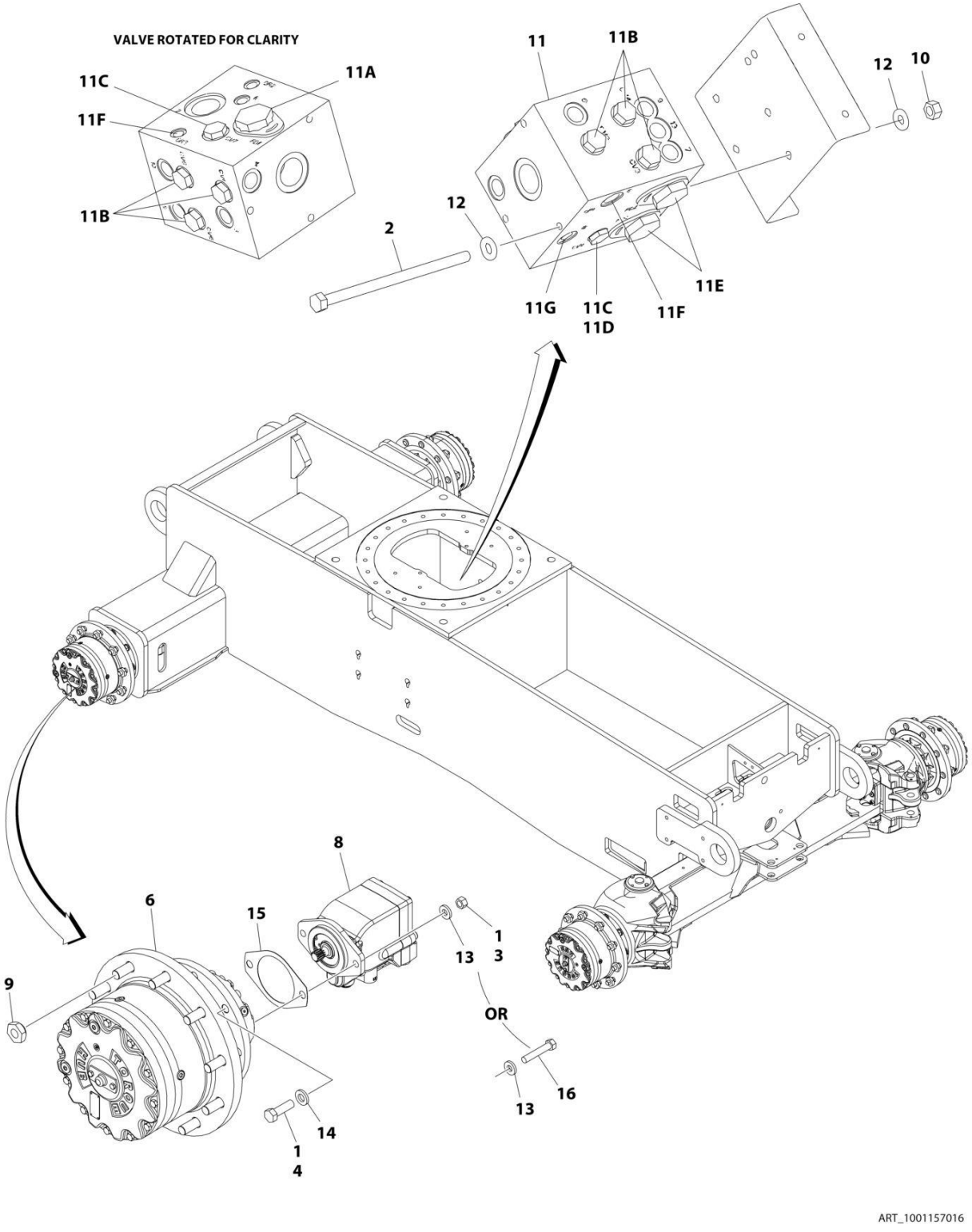

FIGURE 1-5. WHEEL DRIVE AND FRAME VALVES INSTALLATION - 4WD/2WS

ITEM	PART NUMBER	QTY	DESCRIPTION	REV
	1001157016	Ref	WHEEL DRIVE AND FRAME VALVES INSTALLATION	E
1	0100011	AR	Compound, Locking	
2	0641560	3	Bolt 5/16 x 7-1/2	
3	3311801	8	Nut 1/2	
4	0682016	32	Bolt 5/8 x 2 Grade 8	
5	2300016	AR	Fluid, Hydraulic (Not Shown)	
6	1001219219	4	Drive Hub Assembly (See Separate Breakdown in this Section)	
8	3160348	4	Drive Motor Assembly (See Separate Breakdown in this Section)	
9	3300007	40	Nut, Wheel	
10	3311505	3	Nut 5/16	
11	4641303	1	Flow Divider Valve Assembly	C
11A	7023933	1	Cartridge, Flow Divider	
11A	7021625	1	Seal Kit - 7023933 Cartridge	
11B	7022397	6	Cartridge, Check	
11B	7022399	6	Seal Kit - 7022397 Cartridge	
11C	7021639	2	Cartridge, Check Valves	
11C	2900756	2	Seal Kit - 7021639 Cartridge	
11D	7024881	1	Piston, Pilot	
11E	7023917	2	Cartridge, Flow Divider	
11E	7021625	2	Seal Kit - 7023917 Cartridge	
11F	70003935	2	Orifice	
11G	70003936	1	Orifice	
12	4711500	6	Washer 5/16	
13	4891800	8	Washer 1/2	
14	4892000	32	Washer 5/8	
15	3960526	2	Gasket	
16	0681822	4	Bolt 1/2 x 2-3/4	

FIGURE 1-6. DRIVE HUB/BRAKE ASSEMBLY

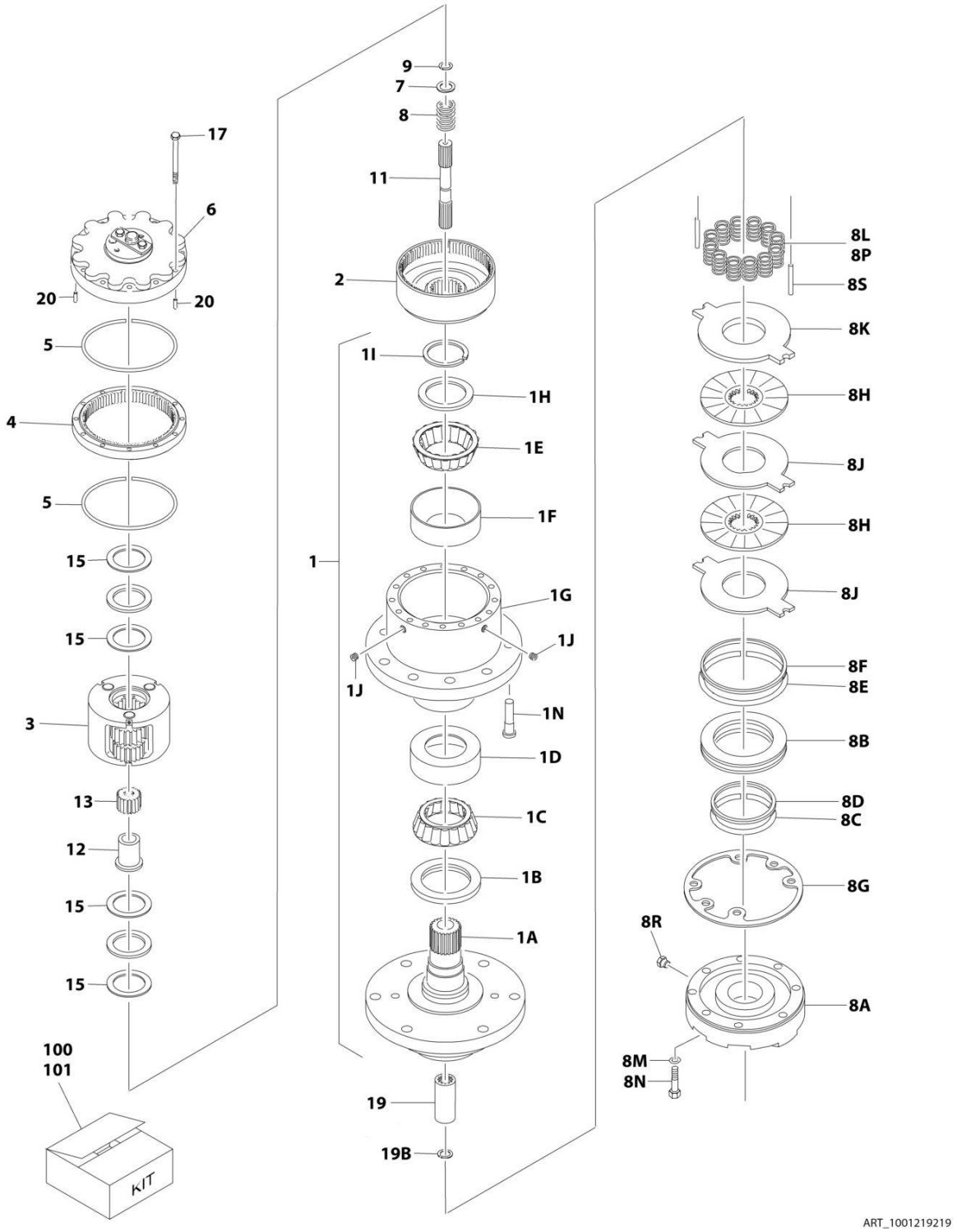

FIGURE 1-6. DRIVE HUB/BRAKE ASSEMBLY

ITEM	PART NUMBER	QTY	DESCRIPTION	REV
	1001219219	Ref	DRIVE HUB/BRAKE ASSEMBLY	C
1	See Note	NSS	Spindle/Housing Assembly (Note: Not Available - Purchase Individual Components)	
1A	70006677	1	Spindle	
1B	70006678	1	Seal	
1C	1001091460	1	Cone, Bearing	
1D	1001091460	1	Cup, Bearing	
1E	1001091461	1	Cone, Bearing	
1F	1001091461	1	Cup, Bearing	
1G	See Note	NSS	Housing (Note: Not Available - Not Available for Purchase)	
1H	7000239	1	Thrustwasher	
1I	7000240	1	Ring, Retaining	
1J	7001928	1	Plug, Pipe	
1N	See Note	NSS	Stud, Wheel (Note: Not Available - Not Available for Purchase)	
2	7024782	1	Gear, Ring	
3	70006673	1	Carrier Assembly	
4	7024151	1	Gear, Internal	
5	7000224	2	O-Ring	
6	70006674	NSS	Cover Assembly (Note: Not Available - Not Available for Purchase)	
7	70006691	1	Thrustwasher	
8	7000283	1	Spring	
8A	7024191	1	Housing, Piston	
8B	70006684	1	Piston	
8C	See Note	NSS	O-Ring (Note: Use Item 101)	
8D	See Note	NSS	Ring, Back-up (Note: Use Item 101)	
8E	See Note	NSS	O-Ring (Note: Use Item 101)	
8F	See Note	NSS	Ring, Back-up (Note: Use Item 101)	
8G	See Note	NSS	Gasket (Note: Use Items 100 & 101)	
8H	See Note	NSS	Brake, Stator (Note: Use Item 100)	
8J	See Note	NSS	Brake, Rotor (Note: Use Item 100)	
8K	See Note	NSS	Plate, Pressure (Note: Use Item 100)	
8L	80344004	10	Spring	
8M	70006685	6	Capscrew	
8N	70006690	6	Lockwasher	
8P	70006680	2	Spring	
8R	7017082	2	Plug	
8S	7024190	2	Pin, Dowel	
9	7000284	1	Ring, Retaining	
11	70006675	1	Shaft, Input	
12	7024154	1	Spacer, Input	
13	7024149	1	Gear, Sun	
15	70006692	2	Thrustwasher	
17	7000289	12	Bolt 3/8 x 2-1/2in (Grade 8)	
19	70006676	1	Coupling	
19B	7017028	1	Ring, Retaining	
20	7017047	2	Pin, Dowel	
100	70006832	1	Friction Disc Kit (Includes Items 8G, 8H, 8J & 8K)	
101	70006833	1	Seal Kit (Includes Items - 8C-8G)	

FIGURE 1-7. DRIVE MOTOR ASSEMBLY - 4WD

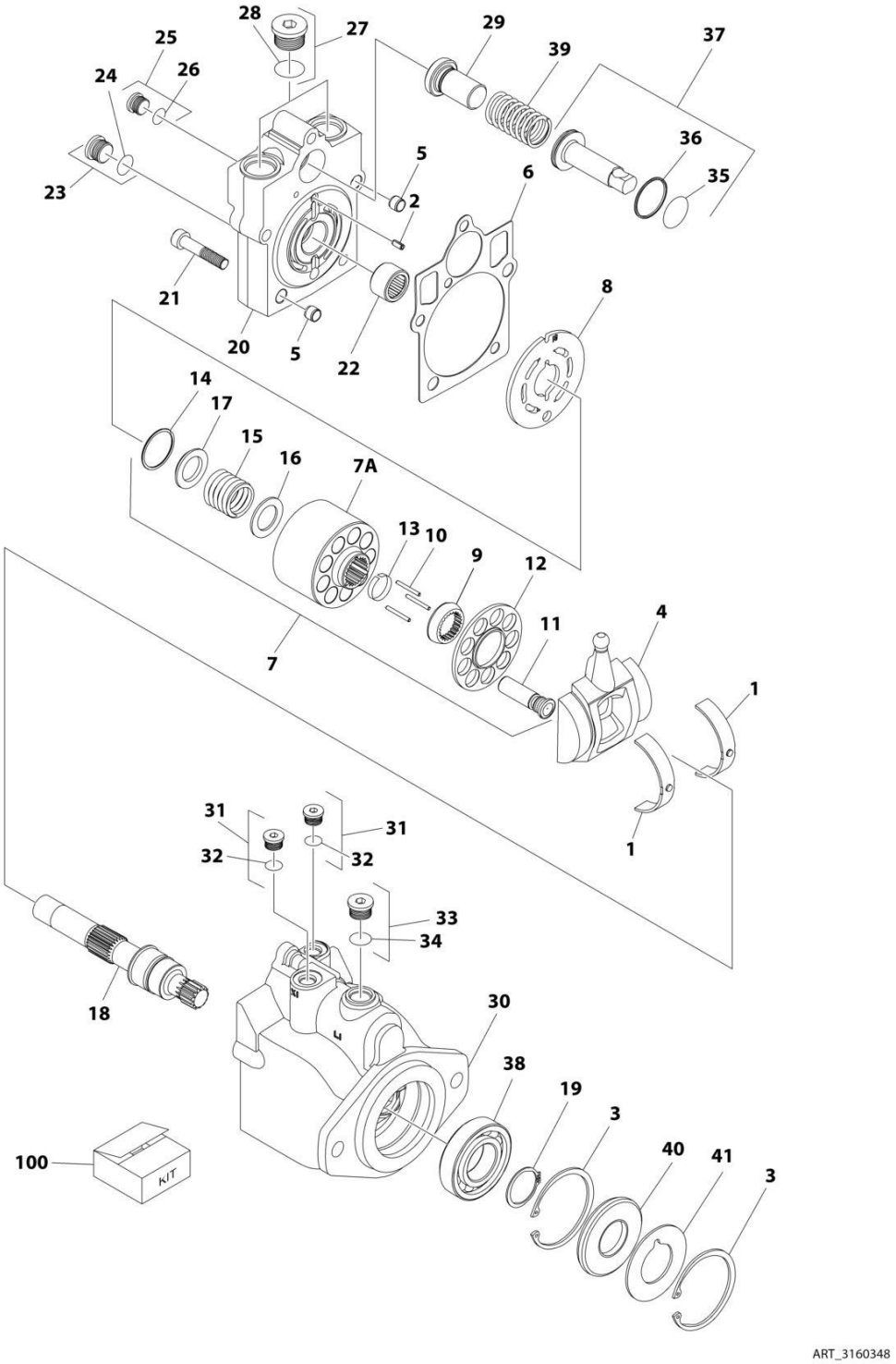

FIGURE 1-7. DRIVE MOTOR ASSEMBLY - 4WD

ITEM	PART NUMBER	QTY	DESCRIPTION	REV
	3160348	Ref	DRIVE MOTOR ASSEMBLY	D
1	7022302	2	Bearing, Journal	
2	7007446	1	Pin	
3	7007438	2	Ring, Retaining	
4	7022305	1	Swash Plate	
5	See Note	2	Pin (Note: Not Available for Purchase)	
6	See Note	NSS	Gasket (Note: Use Item 100)	
7	7023907	1	Cylinder Block Kit (Includes Items 7A & 9-17)	
7A	See Note	NSS	Block, Cylinder (Note: Use Item 7)	
8	7023908	1	Plate, Valve	
9	7021277	1	Guide, Slipper Retainer	
10	7021275	3	Pin, Slipper Hold Down	
11	See Note	NSS	Piston Assembly (Note: Use Item 7)	
12	7022310	1	Retainer, Slipper	
13	7021276	1	Retainer, Hold Down Pin	
14	7022311	1	Ring, Retaining	
15	7022312	1	Spring	
16	7024868	1	Washer	
17	7022314	1	Retainer, Spring	
18	7023910	1	Shaft	
19	7007439	1	Ring, Retaining	
20	70000797	1	Cap, End - Axial	
21	7022368	5	Screw	
22	7021249	1	Bearing, Needle	
23	2220886	1	Plug (Includes Item 24)	
24	See Note	1	O-Ring (Note: Use Item 23 or 100)	
25	2220883	1	Plug (Includes Item 26)	
26	See Note	NSS	O-Ring (Note: Use Item 25 or 100)	
27	2220888	2	Plug (Includes Item 28)	
28	See Note	NSS	O-Ring (Note: Use Item 27 or 100)	
29	7022372	1	Seat, Spring	
30	See Note	NSS	Housing (Note: Not Available - Purchase Complete Assembly)	
31	2220883	2	Plug (Includes Item 32)	
32	See Note	NSS	O-Ring (Note: Use Item 31 or 100)	
33	2220886	1	Plug (Includes Item 34)	
34	See Note	NSS	O-Ring (Note: Use Item 33 or 100)	
35	See Note	NSS	O-Ring (Note: Use Item 100)	
36	See Note	NSS	Ring, Seal (Note: Use Item 100)	
37	7024854	1	Piston, Servo (Includes Items 35 & 36)	
38	7007437	1	Bearing	
39	7022326	1	Spring	
40	See Note	1	Seal, Lip (Note: Use Item 100)	
41	7022371	1	Washer, Support	
		Ref	KIT OPTIONS:	
100	7022328	1	Seal Kit (Includes Items 6, 24, 26, 28, 32, 34, 35, 36 & 40)	

FIGURE 1-8. TIRE AND WHEEL INSTALLATION 18-625 NHS FOAM-FILLED TIRE

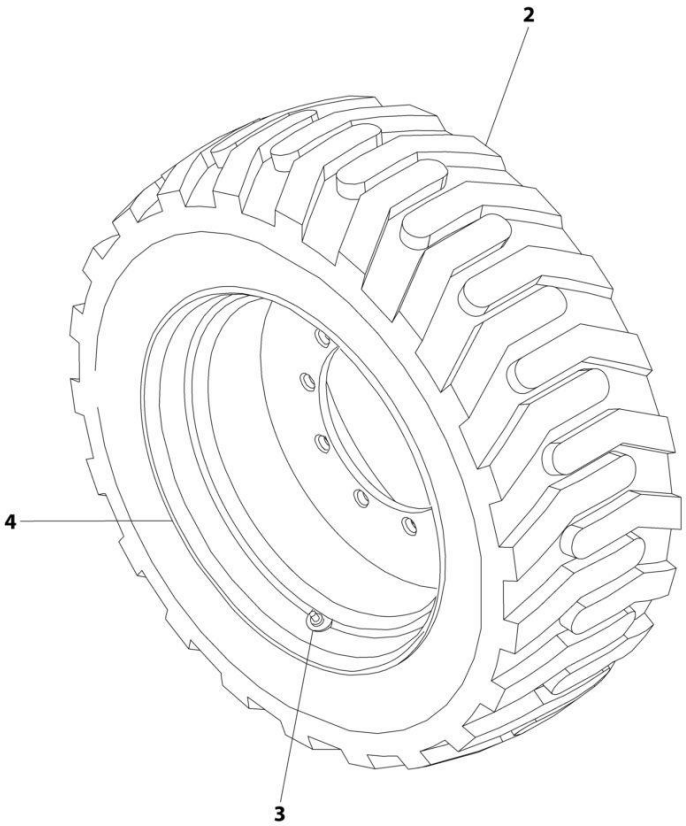

ART_0270888

FIGURE 1-8. TIRE AND WHEEL INSTALLATION 18-625 NHS FOAM-FILLED TIRE

ITEM	PART NUMBER	QTY	DESCRIPTION	REV
	0270888	Ref	TIRE AND WHEEL INSTALLATION	C
	0271090	2	Tire and Wheel Assembly - 18-625 NHS Foam-Filled LH Side	G
	0271091	2	Tire and Wheel Assembly - 18-625 NHS Foam-Filled RH Side	G
		Ref	Note: Assemblies may require ballast/foam filling to manufacturer's specifications prior to installing on a machine. Refer to Operation and Safety or Service and Maintenance Manuals.	
		Ref	Purchase individual tire and/or rim only if able to foam fill tire and wheel assembly, otherwise, purchase complete assembly.	
2	4520253	1	Tire 18-625	
3	4641122	1	Valve, Air	
4	4860225	1	Rim, Wheel - 15 x 24.5 Rim	

FIGURE 1-9. TIRE AND WHEEL INSTALLATION 18-625 NHS FOAM-FILLED NON-MARKING TIRE

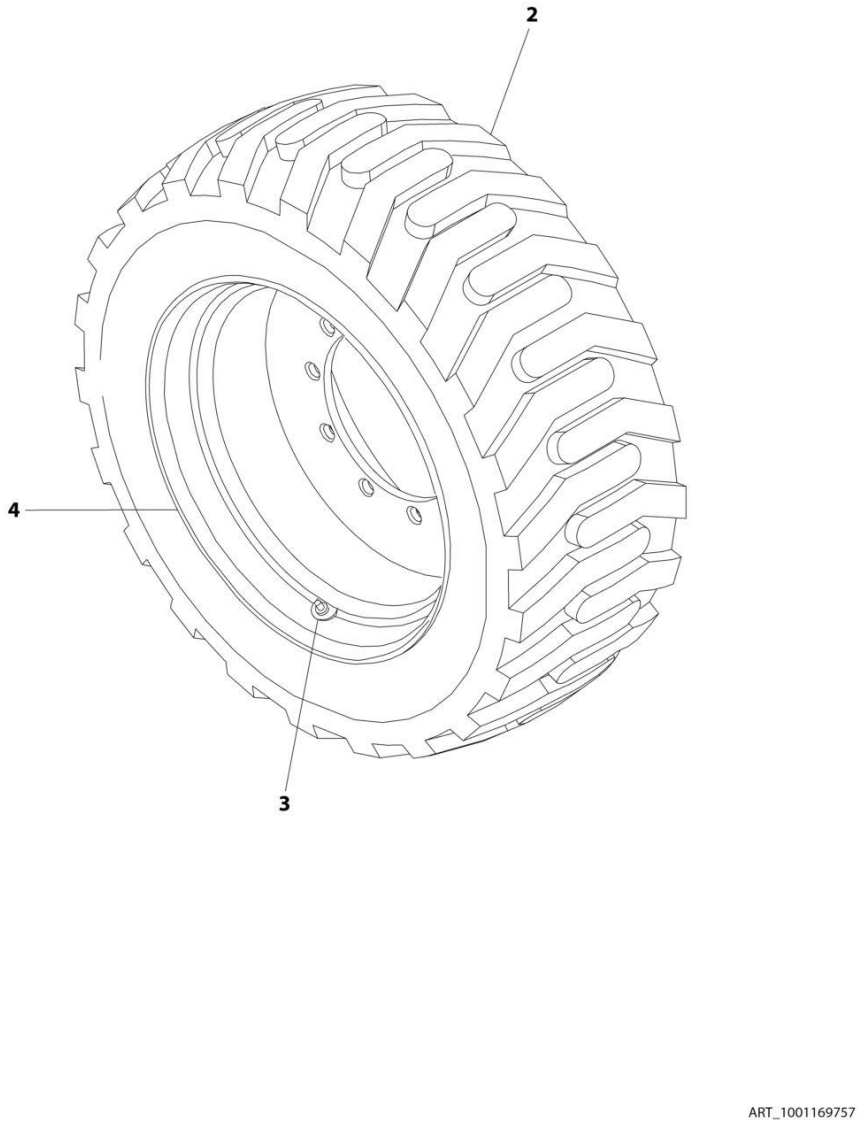

FIGURE 1-9. TIRE AND WHEEL INSTALLATION 18-625 NHS FOAM-FILLED NON-MARKING TIRE

ITEM	PART NUMBER	QTY	DESCRIPTION	REV
	1001169757	Ref	TIRE AND WHEEL INSTALLATION	A
	1001169755	2	Tire and Wheel Assembly - 18-625 NHS Foam-Filled Non-Marking LH Side	D
	1001169756	2	Tire and Wheel Assembly - 18-625 NHS Foam-Filled Non-Marking RH Side	D
		Ref	Note: Assemblies may require ballast/foam filling to manufacturer's specifications prior to installing on a machine. Refer to Operation and Safety or Service and Maintenance Manuals.	
		Ref	Purchase individual tire and/or rim only if able to foam fill tire and wheel assembly, otherwise, purchase complete assembly.	
2	1001169754	1	Tire 18-625 Non-Marking	
3	4641122	1	Valve, Air	
4	4860225	1	Rim, Wheel - 15 x 24.5 Rim	

FIGURE 1-10. TIRE AND WHEEL INSTALLATION 18-625 NHS FOAM-FILLED SAND TIRE

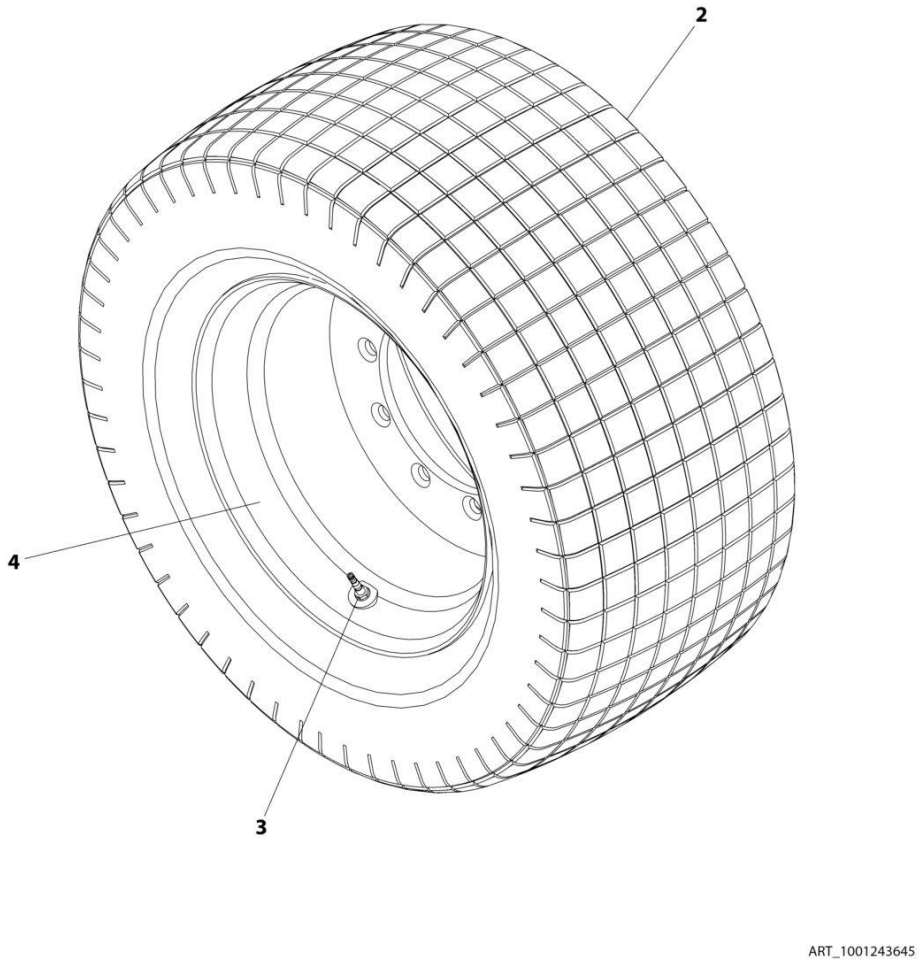

FIGURE 1-10. TIRE AND WHEEL INSTALLATION 18-625 NHS FOAM-FILLED SAND TIRE

ITEM	PART NUMBER	QTY	DESCRIPTION	REV
	1001243645	Ref	TIRE AND WHEEL INSTALLATION	A
	1001245049	4	Tire and Wheel Assembly - 18-625 NHS Foam-Filled Sand	B
		Ref	Note: Assemblies may require ballast/foam filling to manufacturer's specifications prior to installing on a machine. Refer to Operation and Safety or Service and Maintenance Manuals.	
		Ref	Purchase individual tire and/or rim only if able to foam fill tire and wheel assembly, otherwise, purchase complete assembly.	
2	4520256	1	Tire 18-625 Non-Marking	
3	4641122	1	Valve, Air	
4	1001209982	1	Rim, Wheel - 22.5 x 14	

FIGURE 1-11. LP TANK BRACKETS INSTALLATIONS

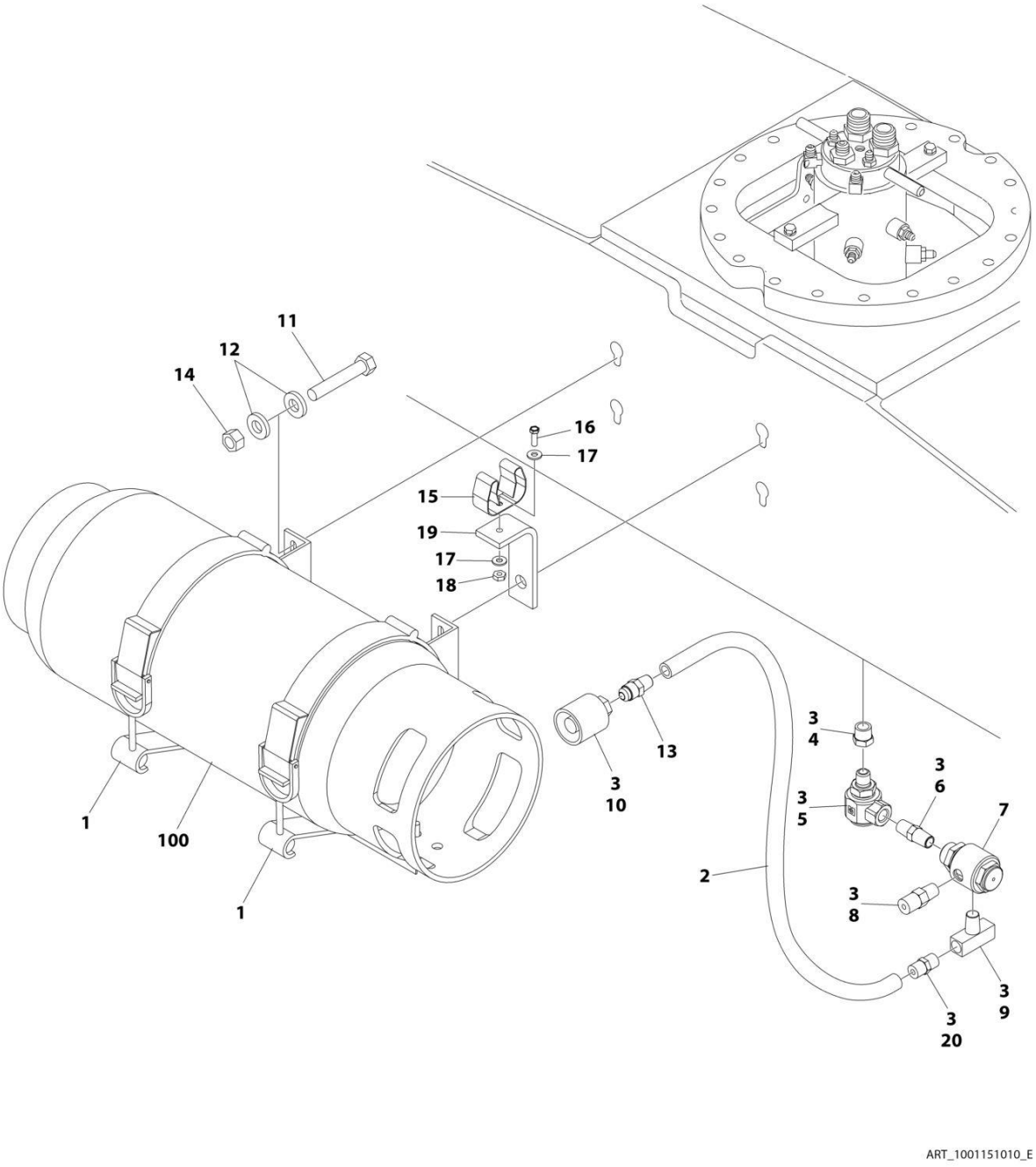

FIGURE 1-11. LP TANK BRACKETS INSTALLATIONS

ITEM	PART NUMBER	QTY	DESCRIPTION	REV
	1001151010	Ref	LP TANK BRACKETS INSTALLATION	E
1	1320220	2	Clamp	
1	1320127	2	Clamp, Toggle (1 Per Clamp)	
2	2720144	2	Hose	
3	0100020	AR	Sealant, Pipe	
4	2221197	1	Fitting, Reducer	
5	1001247358	1	Fitting, 90 Swivel	
6	2220261	1	Fitting, Nipple	
7	2180388	1	Fitting, Bulkhead	
8	2180389	1	Valve, Relief	
9	2220418	1	Fitting, Tee	
10	2180387	2	Fitting, Straight	
11	0641617	8	Bolt 3/8 x 2-1/8	
12	4751600	16	Washer 3/8	
13	2180418	2	Fitting, Connector	
14	3311605	8	Nut 3/8	
15	1320218	2	Clamp, Spring	
16	0720804	2	Screw #8 x 1/2	
17	4750800	4	Washer #8	
18	3310805	2	Nut #8	
19	0181949	2	Angle, Support	
20	2221024	2	Fitting, Union Ball Check	
100	4400275	1	Tank, LP - 43.5 Lbs. (Aluminum)	
100	4400420	1	Tank, LP - 43.5 Lbs. (Steel)	

FIGURE 1-12. FRAME SHIELDS INSTALLATION - 2WS

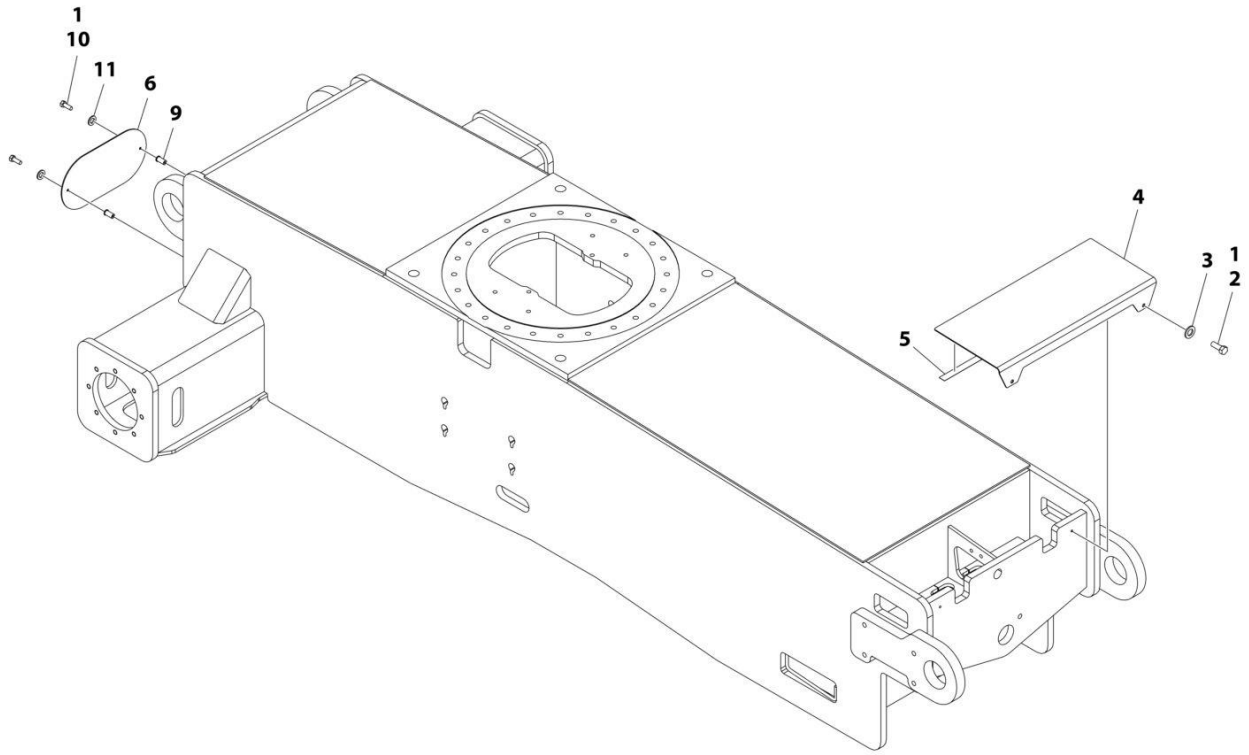

ART_1001158203

FIGURE 1-12. FRAME SHIELDS INSTALLATION - 2WS

ITEM	PART NUMBER	QTY	DESCRIPTION	REV
	1001158203	Ref	FRAME SHIELDS INSTALLATION	D
1	0100011	AR	Compound, Locking	
2	0641606	2	Bolt 3/8 x 3/4	
3	4751600	2	Washer 3/8	
4	1001158187	1	Cover	
5	4280296	27 in/ 68cm	Trim	
6	1001158188	1	Cover	
9	8580420	2	Nut, Well	
10	0641410	2	Bolt 1/4 x 1-1/4	
11	4751400	2	Washer 1/4	

FIGURE 1-13. TOW PACKAGE INSTALLATION - 2WS (ENGLISH LANGUAGE DECALS)

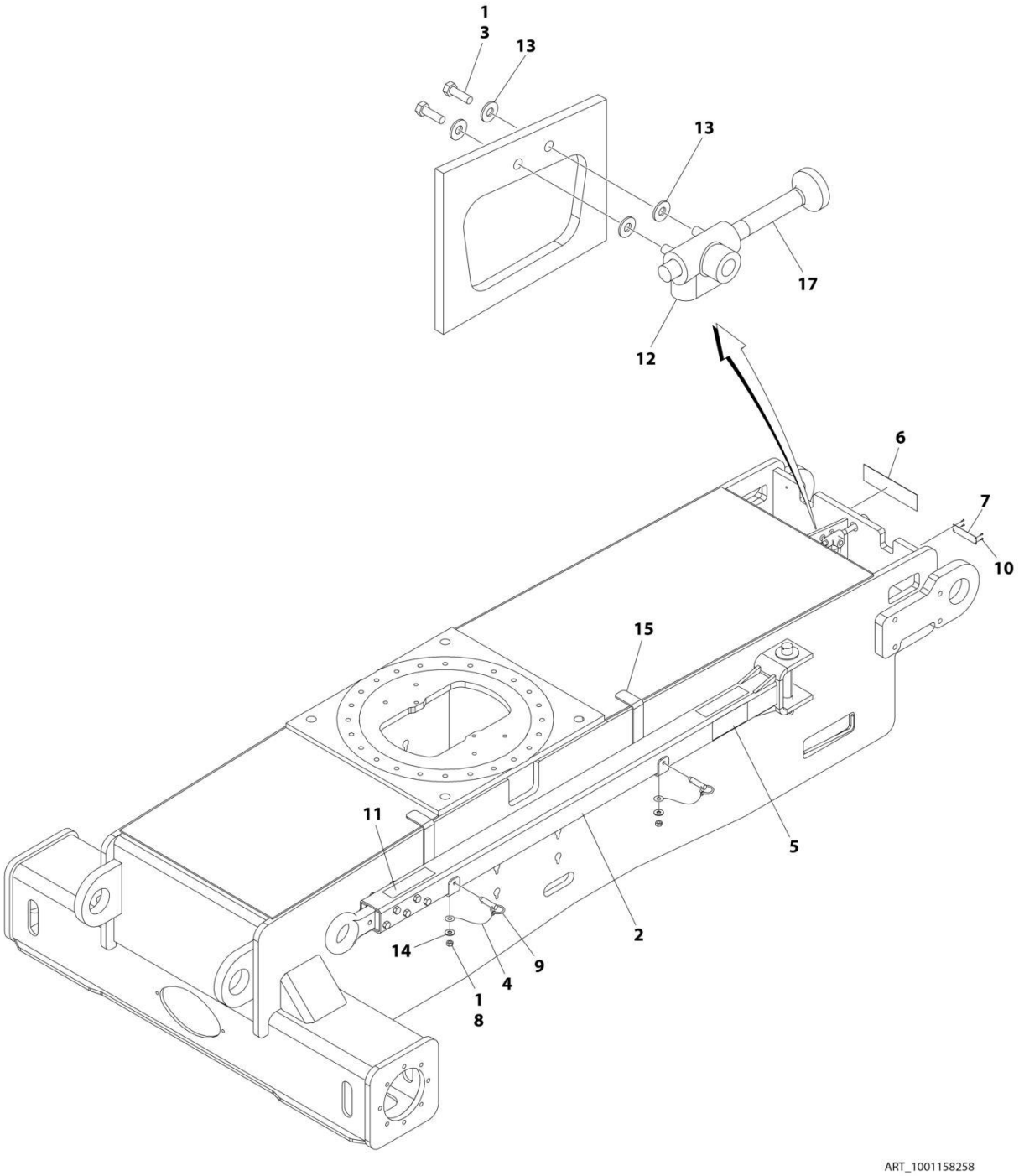

FIGURE 1-13. TOW PACKAGE INSTALLATION - 2WS (ENGLISH LANGUAGE DECALS)

ITEM	PART NUMBER	QTY	DESCRIPTION	REV
	1001158258	Ref	TOW PACKAGE INSTALLATION	B
1	0100011	AR	Compound, Locking	
2	0232121	1	Tow Bar Assembly (See Separate Breakdown in this Section)	
3	0641508	2	Bolt 5/16 x 1	
4	1260017	2 ft/0.3m	Chain	
5	1704578	2	Decal - Crushing	
6	1705090	1	Decal - Towing Instructions	
7	3250872	1	Nameplate - Steer/Tow Valve	
8	3311401	2	Nut 1/4	
9	3420292	2	Pin	
10	3820001	4	Rivet, Pop	
11	4420051	2 ft/0.3m	Tape	
12	4640261	1	Valve, Float Position	
13	4751500	4	Washer 5/16	
14	4751400	2	Washer 1/4	
15	1001158522	2	Bracket	
17	1001160780	1	Rod, Extension	

FIGURE 1-14. TOW PACKAGE INSTALLATION - 2WS (CE & UK CA SPECS)

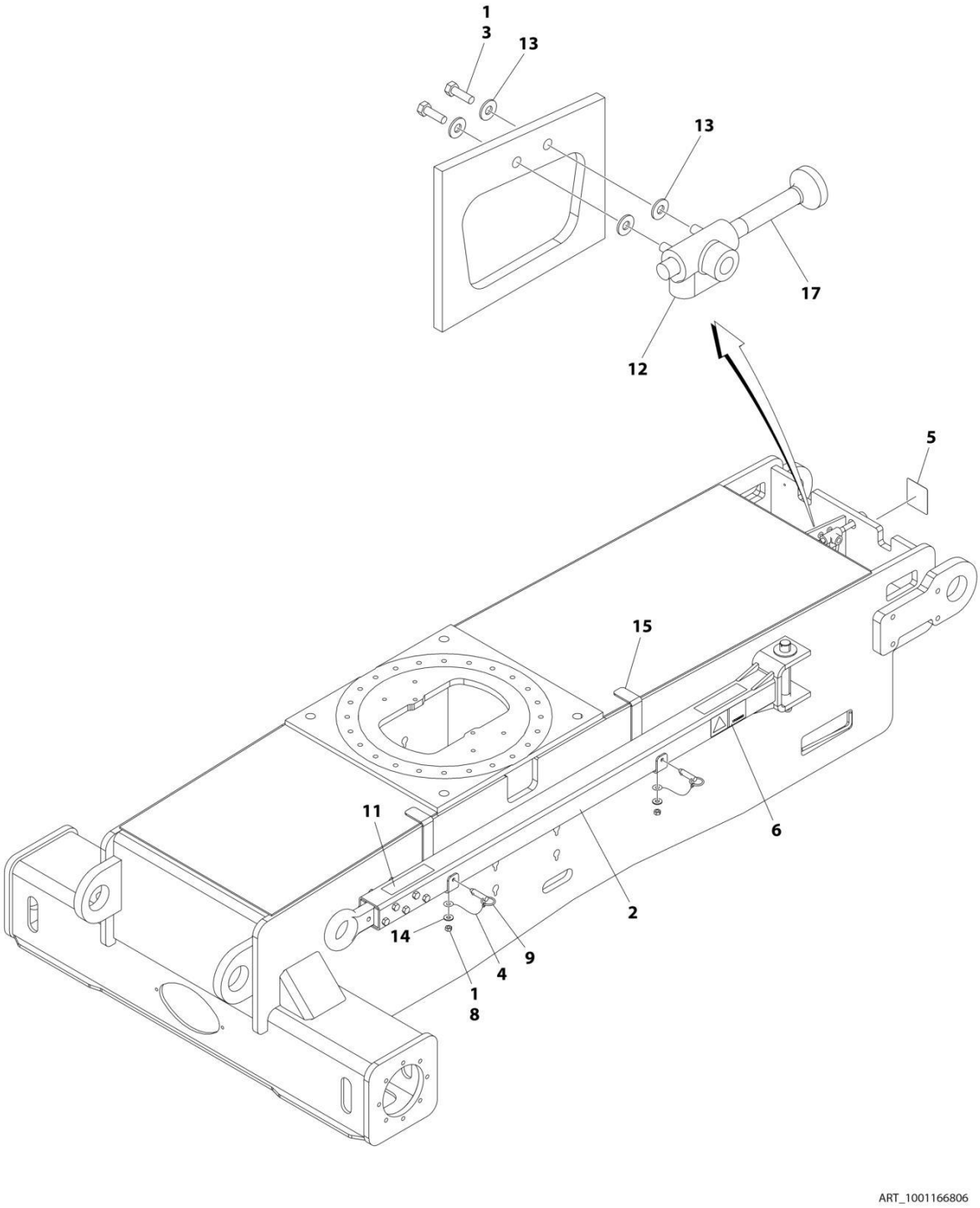

FIGURE 1-14. TOW PACKAGE INSTALLATION - 2WS (CE & UK CA SPECS)

ITEM	PART NUMBER	QTY	DESCRIPTION	REV
	1001166806	Ref	TOW BAR INSTALLATION	B
1	0100011	AR	Compound, Locking	
2	0232121	1	Tow Bar Assembly (See Separate Breakdown in this Section)	
3	0641508	2	Bolt 5/16 x 1	
4	1260017	2 ft/0.3m	Chain	
5	1706957	1	Decal - Tow Bar and Steer Select	
6	1706960	2	Decal - Crushing	
7	2792700	1	Hydraulic Diagram, Tow Bar Circuit (Not Shown)	
8	3311401	2	Nut 1/4	
9	3420292	2	Pin	
11	4420051	2 ft/0.3m	Tape	
12	4640261	1	Valve, Float Position	
13	4751500	AR	Washer 5/16	
14	4751400	2	Washer 1/4	
15	1001158522	1	Bracket	
17	1001160780	1	Rod, Extension	

FIGURE 1-15. TOW BAR ASSEMBLY

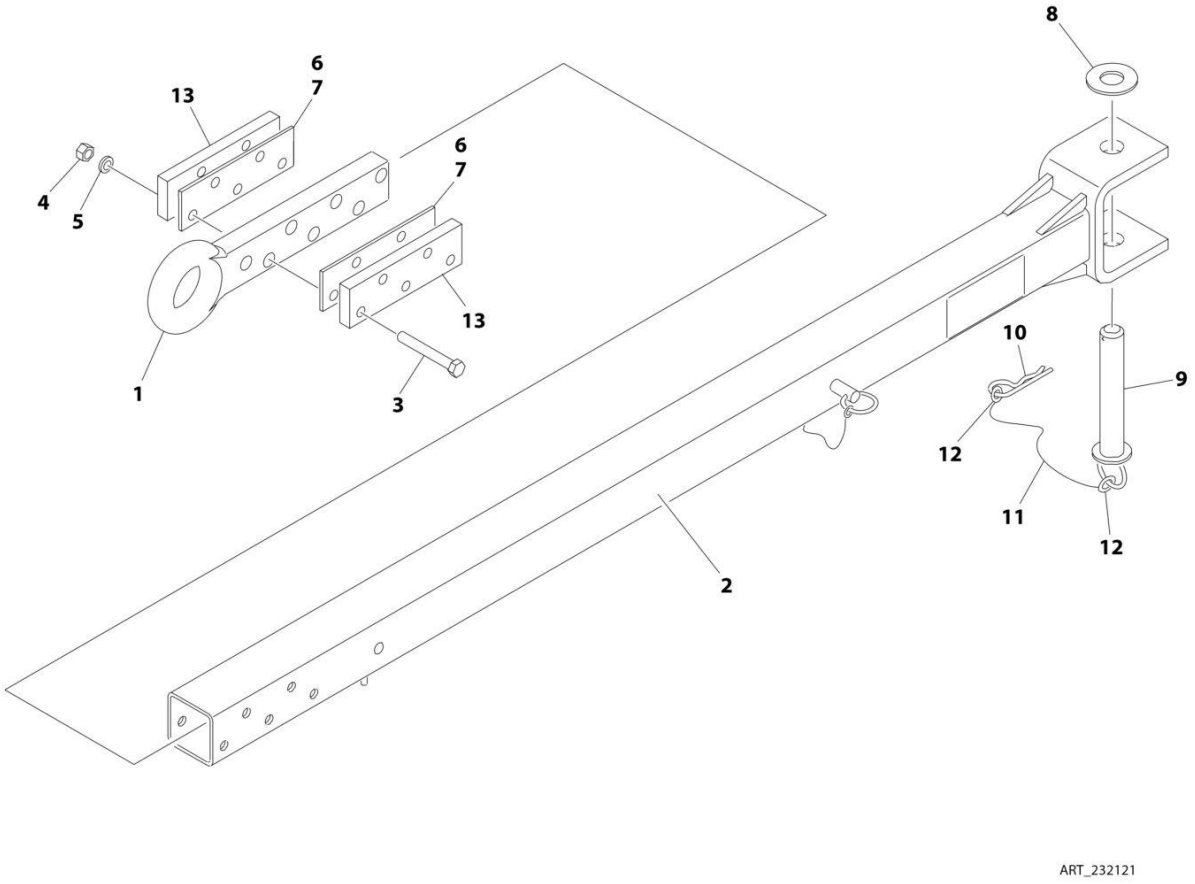

FIGURE 1-15. TOW BAR ASSEMBLY

ITEM	PART NUMBER	QTY	DESCRIPTION	REV
	0232121	Ref	TOW BAR ASSEMBLY	7-G
1	0360406	1	Bar, Draw	
2	4843777	1	Bar, Tow	
3	0642038	5	Bolt 5/8 x 4-3/4	
4	3312001	5	Nut 5/8	
5	4762000	5	Washer 5/8	
6	4070450	AR	Shim	
7	4070561	AR	Shim	
8	4740036	1	Washer 1-1/2	
9	3420447	1	Pin	
10	3420372	1	Pin	
11	1260135	1	Chain	
12	3760170	2	Ring	
13	4070560	2	Shim	

SECTION 2 - TURNTABLE

FIGURE 2-1. CONTROL VALVES INSTALLATION - WITH 2WS

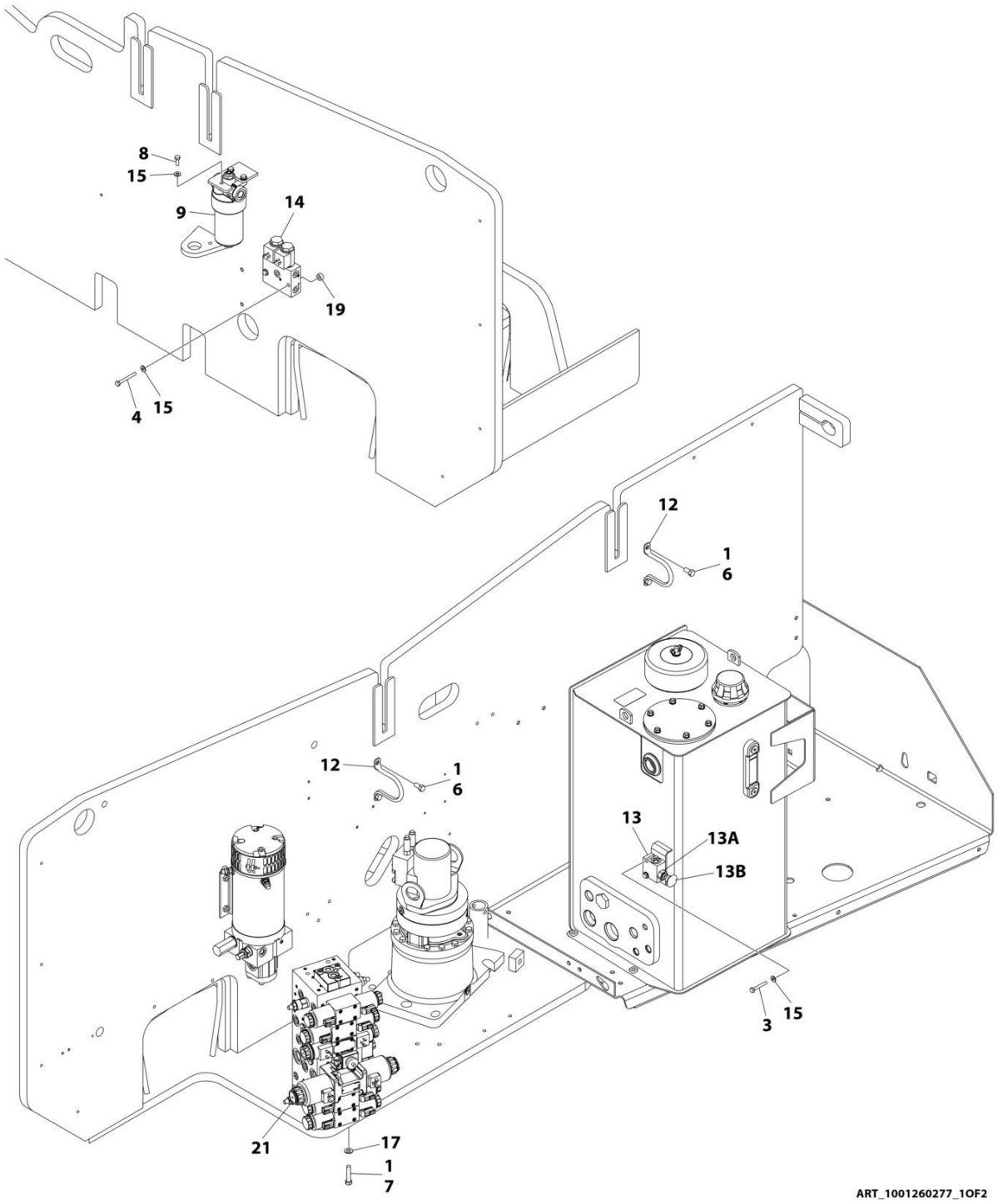

FIGURE 2-1. CONTROL VALVES INSTALLATION - WITH 2WS

ITEM	PART NUMBER	QTY	DESCRIPTION	REV
	1001260277	Ref	BOOM VALVES INSTALLATION	A
1	0100011	AR	Compound, Locking	
3	0641414	2	Bolt 1/4 x 1-3/4	
4	0641418	4	Bolt 1/4 x 2-1/4	
6	0641606	4	Bolt 3/8 x 3/4	
7	0641614	3	Bolt 3/8 x 1-3/4	
8	0651406	3	Bolt 1/4 x 3/4	
9	2120209	1	Pressure Filter Assembly	
9	2120210	1	Element, Filter	
12	3841340	2	Loop, Hose	
13	4640866	1	Level Valve Assembly	
13A	7017466	1	Cartridge	
13A	2900708	1	Seal Kit	
13B	7012959	1	Knob	
14	4641317	1	Brake/2 Speed Valve Assembly	
14	7012944	1	Coil	
14	7012941	1	Cartridge without Coil	
14	7010543	1	Seal Kit- 7012941 Cartridge (1 Per Cartridge)	
15	4711400	11	Washer 1/4	
17	4711600	3	Washer 3/8	
19	1001110425	2	Spacer	
21	1001228170	1	Main Valve Assembly (See Separate Breakdown in this Section)	

FIGURE 2-2. CONTROL VALVE ASSEMBLY - 2WS MACHINES

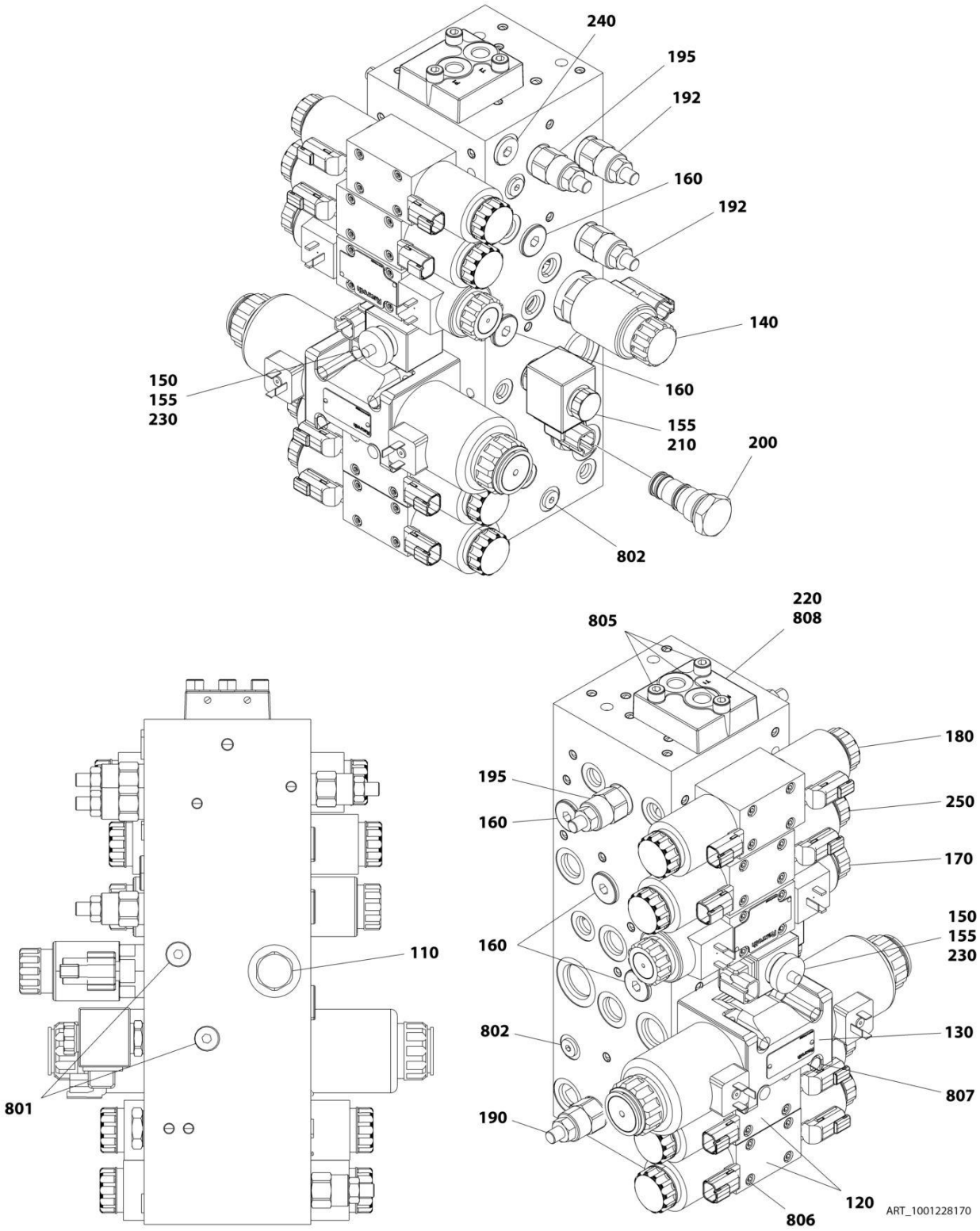

FIGURE 2-2. CONTROL VALVE ASSEMBLY - 2WS MACHINES

ITEM	PART NUMBER	QTY	DESCRIPTION	REV
	1001228170	Ref	MAIN VALVE ASSEMBLY	C
110	70005194	1	Valve, Check Cartridge	
110	70004584	1	Seal Kit - 70005194 Valve	
120	70004459	2	Valve Assembly (Tower Tele and Tower Lift)	
120	7012773	2	Seal Kit - 70004459 Valve	
120	70004460	4	Coil	
120	7021375	4	Nut, Coil	
120	70004461	4	O-Ring, Pole Tube	
130	70006955	1	Valve Assembly (Upper Tele)	
130	70006957	1	Seal Kit - 70006955 Valve	
130	70006956	2	Coil	
140	70004657	1	Valve, Cartridge (Flow Control)	
140	70004594	1	Seal Kit - 70004657 Valve	
140	70004595	1	Coil	
140	70004596	1	O-Ring, Pole Tube	
140	70004597	1	Nut, Coil	
150	70004598	1	Valve, Cartridge Less Coil (Steer Dump)	
150	70004055	1	Seal Kit - 70004598 Valve	
155	70004653	2	Coil	
155	70004051	2	Nut, Coil	
160	70023859	5	Valve, Shuffle Cartridge	
160	70023860	5	Seal Kit - 70023859 Valve	
170	7018992	1	Valve Assembly (Upper Lift)	
170	7024021	1	Seal Kit - 7018992 Valve	
170	7018991	2	Coil	
170	7021375	2	Nut, Coil	
170	70004461	2	O-Ring, Pole Tube	
180	70005195	1	Valve Assembly (Front Steer)	
180	7012773	1	Seal Kit - 70005195 Valve	
180	70004463	2	Coil	
180	7021375	2	Nut, Coil	
180	70004461	2	O-Ring, Pole Tube	
190	70003019	1	Valve, Relief Catridge (was PN 70006959)	
190	See Note	NSS	Seal Kit - Valve (Note: Not Available for Purchase)	
192	70003019	1	Valve, Relief Catridge (was PN 70006960)	
192	See Note	NSS	Seal Kit - Valve (Note: Not Available for Purchase)	
195	70003019	1	Valve, Relief Catridge (was PN 70006958)	
195	See Note	NSS	Seal Kit - Valve (Note: Not Available for Purchase)	
200	70004665	1	Valve, Check - Catridge	
200	70023862	1	Seal Kit - 70004665 Valve	
210	70004457	1	Valve, Cartridge Less Coil (Main Dump)	
210	70004050	1	Seal Kit - 70004665 Valve	
210	70004653	1	Coil	
220	70004667	1	Cover	
230	70005196	1	Orifice .118	
240	70005197	1	Plug (2WS)	
240	70004052	1	Seal Kit - 70005197 Plug	
250	70005198	1	Valve Assembly (Swing)	
250	70006961	1	Seal Kit - 70005198 Valve	
250	70004463	2	Coil	

ITEM	PART NUMBER	QTY	DESCRIPTION	REV
250	7021375	2	Nut, Coil	
250	70004461	2	O-Ring, Pole Tube	
801	70005199	2	Plug	
802	70005200	4	Plug	
805	70005201	3	Capscrew	
806	7018942	20	Capscrew	
807	7018951	4	Capscrew	
808	70005202	2	O-Ring	

FIGURE 2-3. SWING DRIVE INSTALLATION

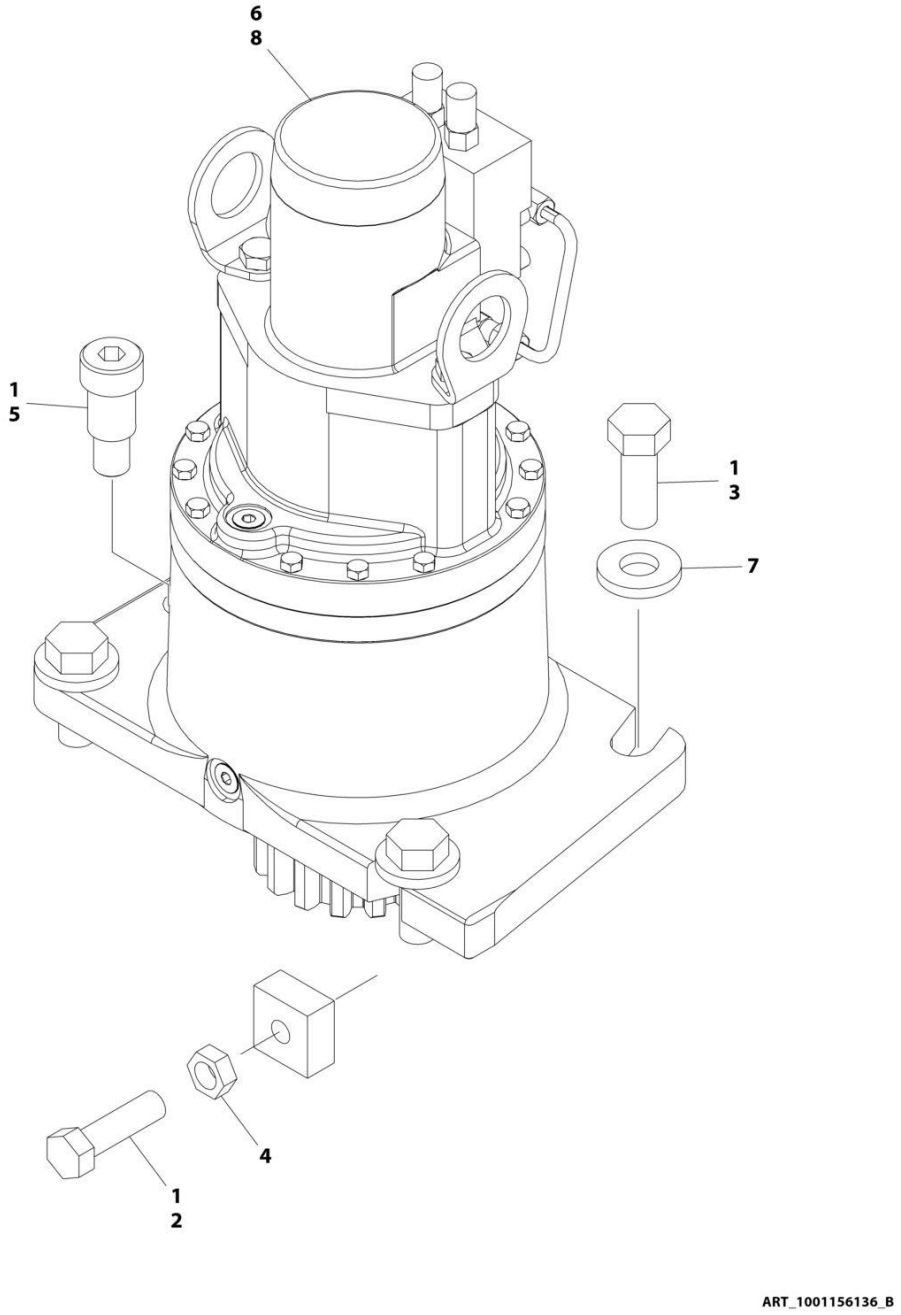

FIGURE 2-3. SWING DRIVE INSTALLATION

ITEM	PART NUMBER	QTY	DESCRIPTION	REV
	1001156136	Ref	SWING DRIVE INSTALLATION	B
1	0100019	AR	Compound, Locking	
2	3952020	1	Setscrew 5/8 x 2-1/2	
3	0682216	4	Bolt 3/4 x 2 Grade 8	
4	3312002	1	Nut 5/8	
5	3900293	1	Screw 1 x 1-1/4	
6	1001125492	1	Shim	
7	4740057	4	Washer	
8	1001229810	1	Swing Motor/Hub Assembly (See Separate Breakdown in this Section)	

FIGURE 2-4. SWING MOTOR/HUB ASSEMBLY

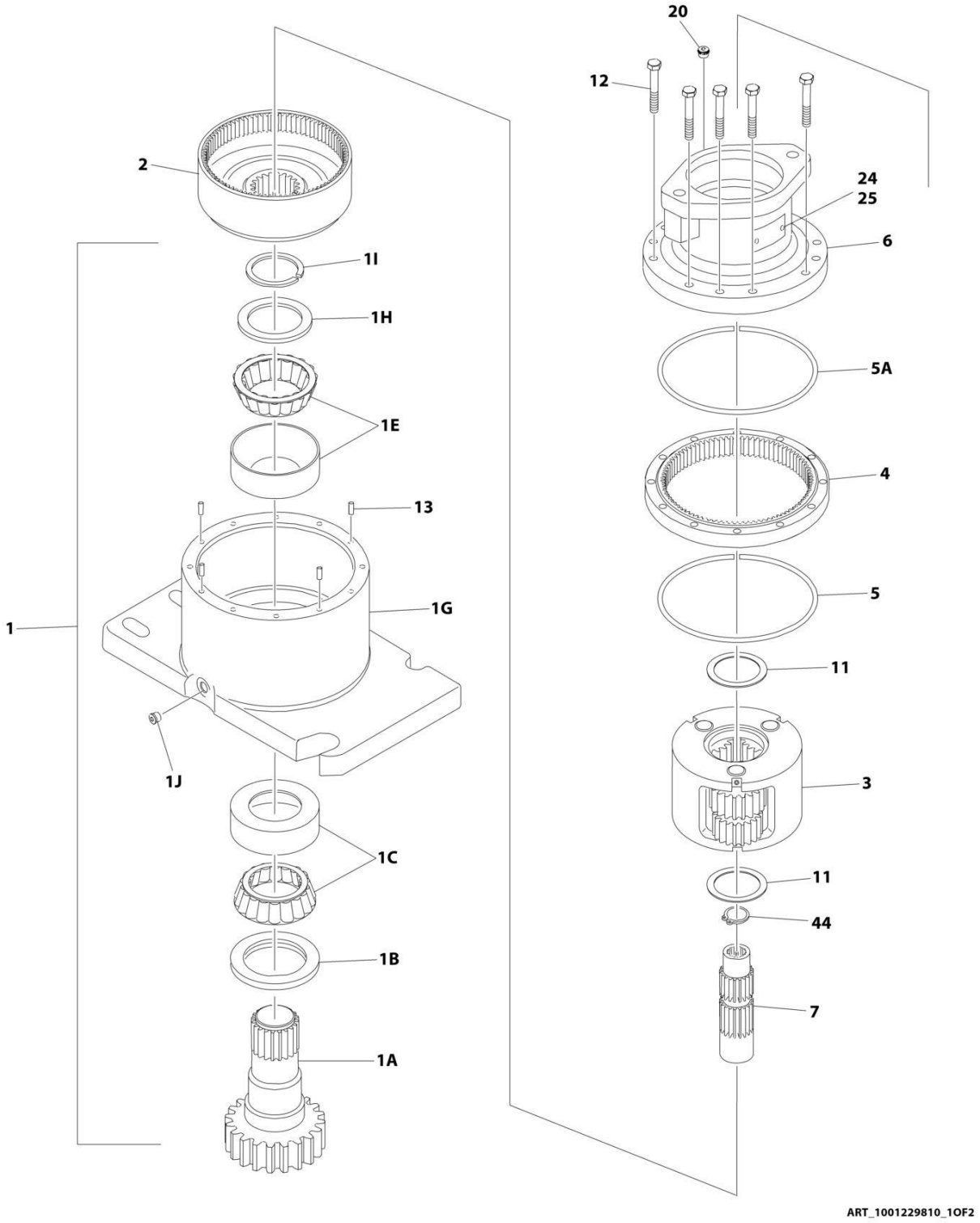

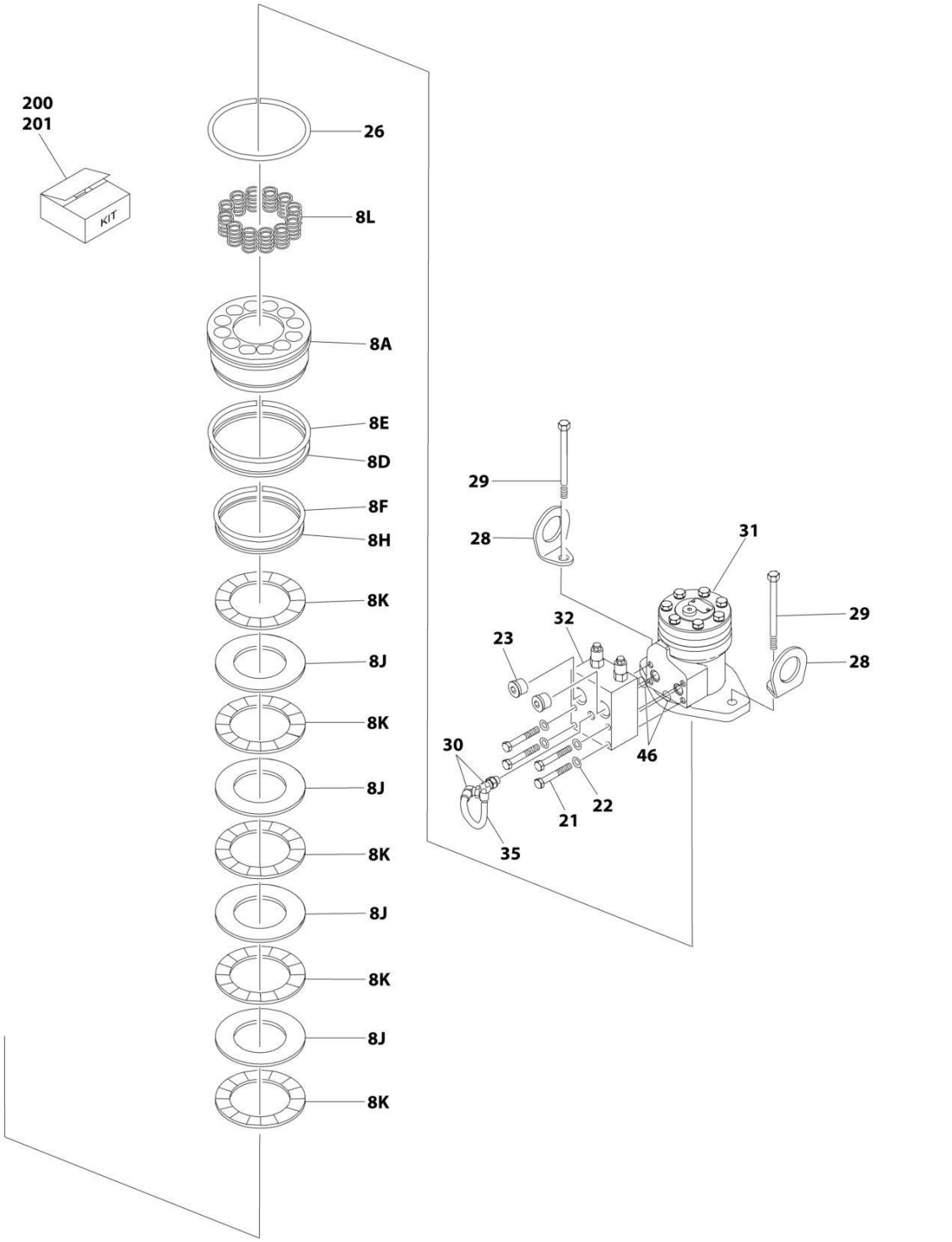

ART_1001229810_2OF2

FIGURE 2-4. SWING MOTOR/HUB ASSEMBLY

ITEM	PART NUMBER	QTY	DESCRIPTION	REV
	1001229810	Ref	SWING MOTOR/HUB ASSEMBLY	C
1	See Note	1	Housing/Shaft Assembly (Note: Not Available - Purchase Individual Components)	
1A	7010492	1	Shaft, Output	
1B	7000228	1	Seal, Lip	
1C	7000255	1	Bearing Kit (Includes Cup and Cone)	
1E	7000257	1	Bearing Kit (Includes Cup and Cone)	
1G	7024762	1	Housing	
1H	7007633	1	Washer, Thrust	
1I	7000229	1	Ring, Retaining	
1J	7017072	1	Plug, Pipe	
2	7000246	1	Gear, Internal	
3	7000247	1	Carrier Assembly	
4	7000248	1	Gear, Ring	
5	7000230	1	O-Ring	
5A	7017070	1	O-Ring	
6	1001229810	NSS	Housing, Brake (Note: Not Available - Purchase Complete Assembly)	
7	70005203	1	Gear, Sun	
8A	70004037	1	Piston	
8D	70004041	1	O-Ring	
8E	70004044	1	Ring, Back-up	
8F	70004042	1	O-Ring	
8H	70004043	1	Ring, Back-up	
8J	70002085	4	Disc, Rotor	
8K	70002085	5	Disc, Stator	
8L	70002066	14	Spring	
11	7000253	2	Washer, Thrust	
12	7000217	12	Bolt 3/8 x 2-1/4 Grade 8	
13	7017080	4	Pin, Dowel	
20	7017072	1	Plug, Pipe	
21	7024704	4	Bolt 5/16 x 2 Grade 8	
22	70004045	4	Washer	
23	7017023	2	Plug, Pipe	
24	See Note	NSS	Plate, ID (Note: Not Available for Purchase)	
25	See Note	NSS	Rivet (Note: Not Available for Purchase)	
26	7024763	1	O-Ring	
28	See Note	NSS	Lug, Lifting (Note: Not Available for Purchase)	
29	70004040	2	Bolt 1/2 x 1 (Grade 8)	
30	7017085	2	Elbow	
31	70006304	1	Motor Assembly	
32	7024784	1	Valve Assembly - Complete (No Serviceable Parts)	
35	70004047	1	Tube	
44	7017028	1	Ring, Internal Retaining	
45	7000213	2	O-Ring	
		Ref	KIT OPTIONS:	
200	7024100	1	Seal Kit - Swing Hub (Includes Items 1B, 1I, 5, 5A & 11)	
201	70002085	1	Disc Kit - Swing Brake (Includes Items 8J & 8K)	

FIGURE 2-5. TURNTABLE BEARING INSTALLATION

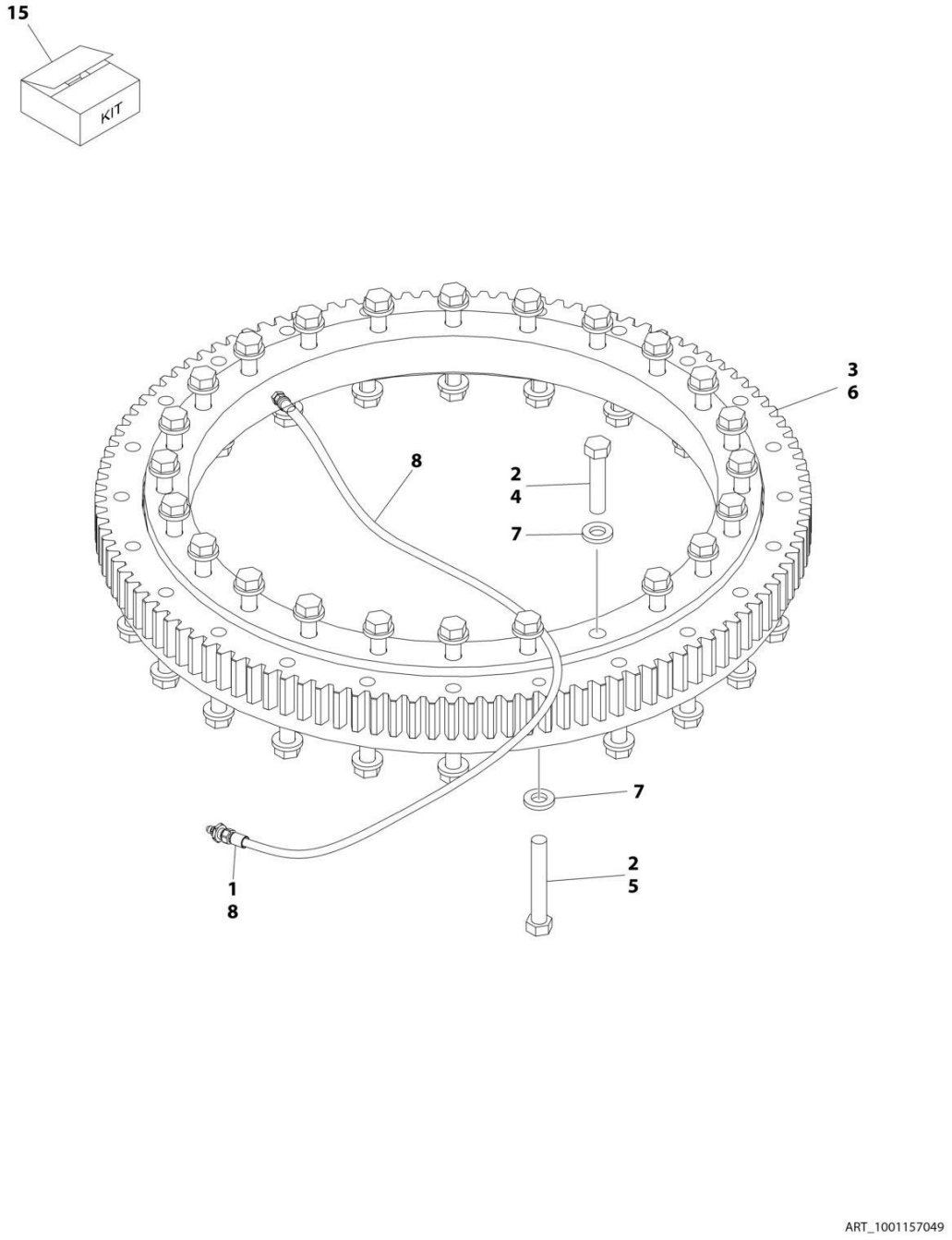

FIGURE 2-5. TURNTABLE BEARING INSTALLATION

ITEM	PART NUMBER	QTY	DESCRIPTION	REV
	1001157049	Ref	TURNTABLE BEARING AND LUBE INSTALLATION	B
1	0100011	AR	Compound, Locking	
2	0100019	AR	Compound, Locking	
3	0440244	1	Bearing, Turntable	
4	0682023	24	Bolt 5/8 x 2-7/8 Grade 8	
5	0682032	24	Bolt 5/8 x 4 Grade 8	
6	3020029	AR	Lubricant	
7	4892000	48	Washer 5/8	
8	1001157058	1	Hose	
15	2915094	1	Turntable Bearing Kit	

FIGURE 2-6. TURNTABLE LOCK INSTALLATION

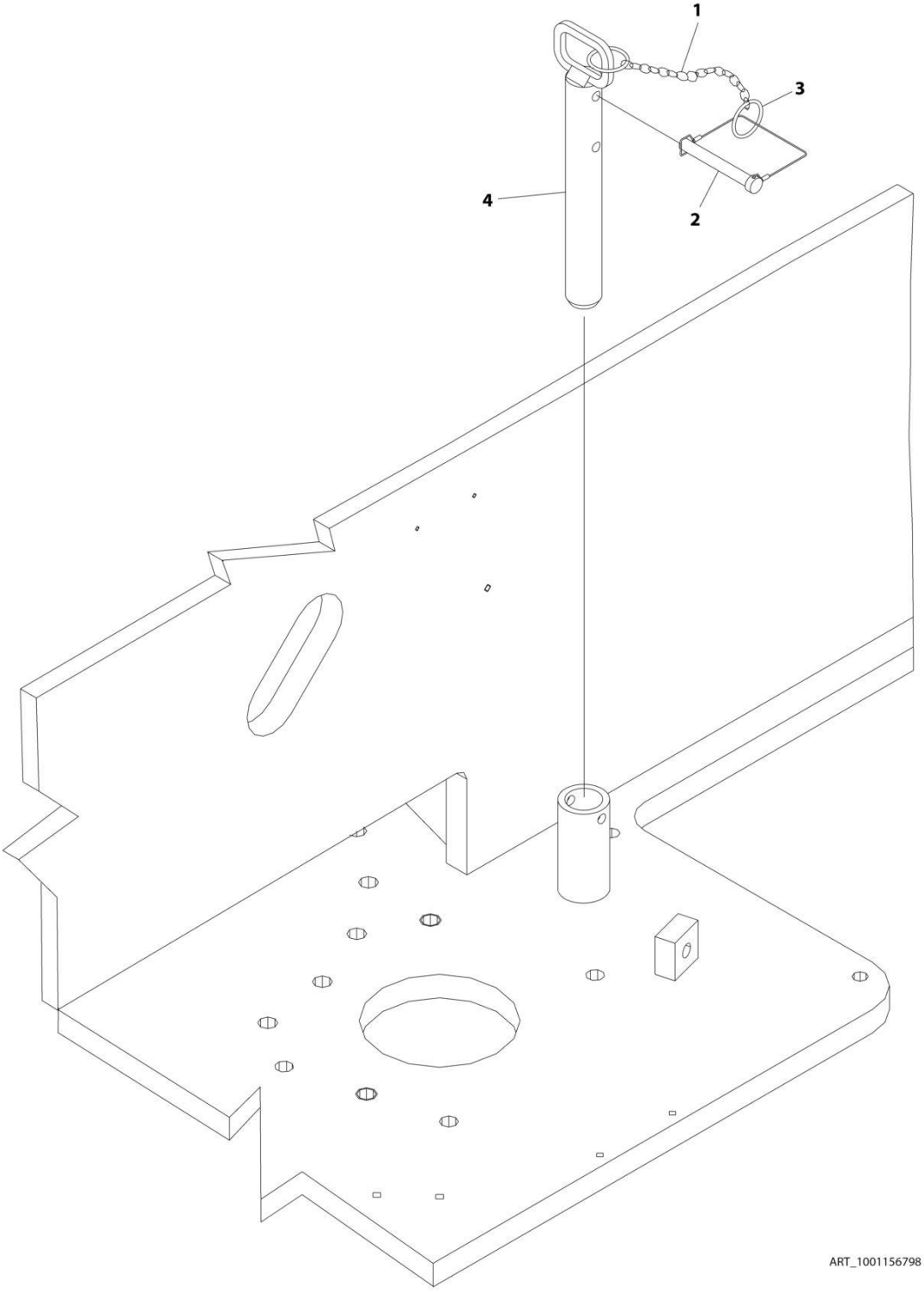

FIGURE 2-6. TURNTABLE LOCK INSTALLATION

ITEM	PART NUMBER	QTY	DESCRIPTION	REV
	1001156798	Ref	TURNTABLE LOCK INSTALLATION	A
1	1260017	9 in/23cm	Chain	
2	3421565	1	Pin, Snap	
3	3760170	2	Ring, Quick Release	
4	4844958	1	Pin	

FIGURE 2-7. ROTARY COUPLING INSTALLATION - 2WS MACHINES

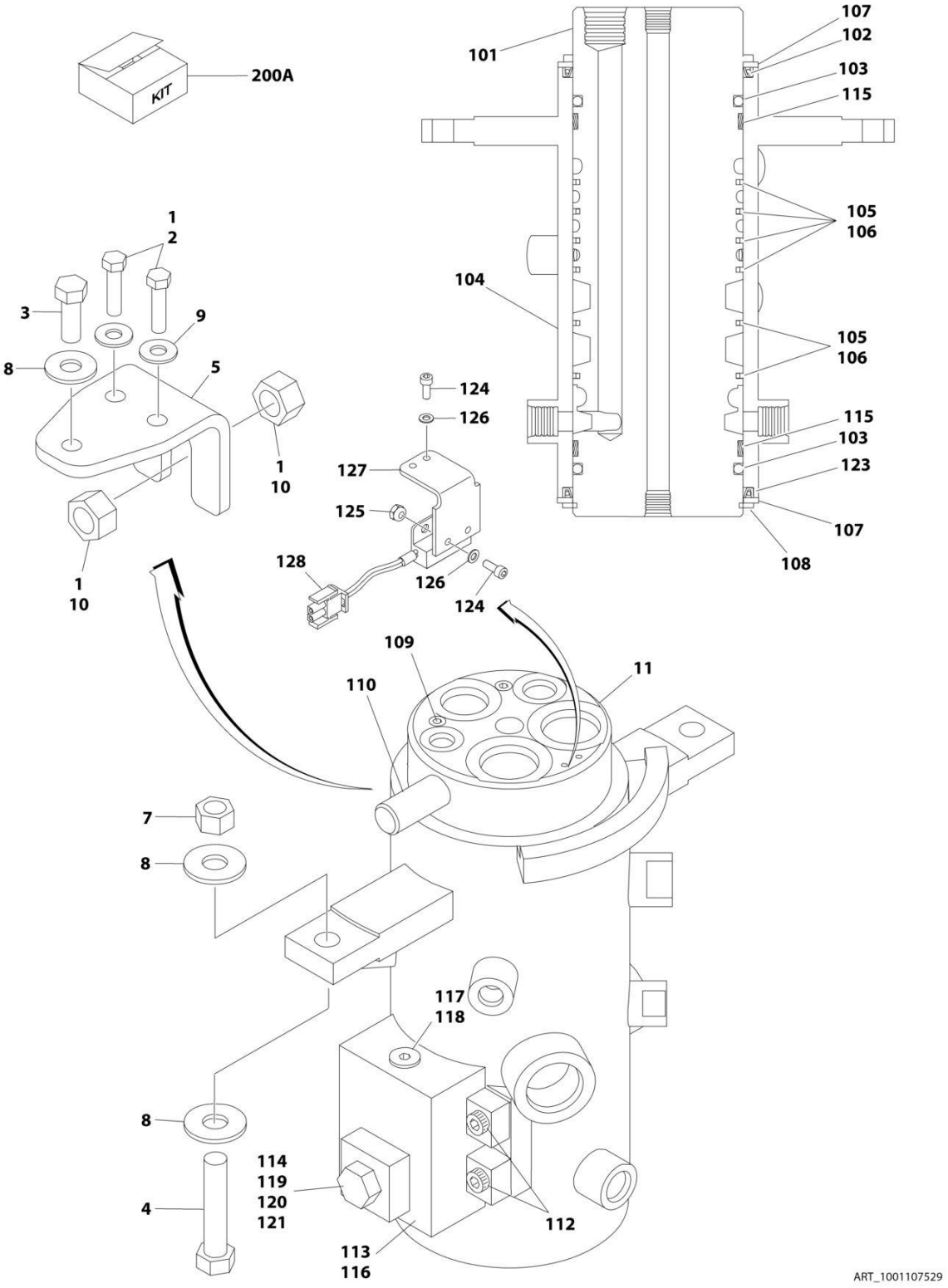

FIGURE 2-7. ROTARY COUPLING INSTALLATION - 2WS MACHINES

ITEM	PART NUMBER	QTY	DESCRIPTION	REV
	1001107529	Ref	ROTARY COUPLING INSTALLATION	B
1	0100011	AR	Compound, Locking	
2	0641611	2	Bolt 3/8 x 1-3/8	
3	0641812	1	Bolt 1/2 x 1-1/2	
4	0641820	2	Bolt 1/2 x 2-1/2	
5	0903242	1	Bracket	
7	3271805	2	Nut 1/2	
8	4751800	5	Washer 1/2	
9	4891600	2	Washer 3/8	
10	3322201	2	Nut 3/4	
11	1001106974	1	Coupling, Rotary Assembly (See Items 101-128 for Breakdown)	
	1001106974	Ref	ROTARY COUPLING ASSEMBLY	B
101	See Note	NSS	Body (Note: Not Available - Purchase Complete Assembly)	
102	See Note	NSS	Seal (Note: Use Item 200A)	
103	See Note	NSS	O-Ring (Note: Use Item 200A)	
104	See Note	NSS	Housing (Note: Not Available - Purchase Complete Assembly)	
105	See Note	NSS	Seal, Cap (Note: Use Item 200A)	
106	See Note	NSS	O-Ring (Note: Use Item 200A)	
107	7026503	2	Ring	
108	7026504	1	Ring, Retaining	
109	80934561	AR	Plug	
110	See Note	NSS	Lug, Torque (Note: Not Available for Purchase)	
112	7026197	4	Bolt 5/16 x 1-1/4	
113	See Note	NSS	O-Ring (Note: Use Item 200A)	
114	See Note	NSS	O-Ring (Note: Use Item 200A)	
115	See Note	NSS	Bearing (Note: Usr Item 200A)	
116	7024404	1	Block Valve Assembly	
117	7026505	1	Plug	
118	7026506	1	Valve, Check	
119	7026507	1	Plug	
120	See Note	NSS	Plunger, Valve (Note: Use p/n 7024404)	
121	7026509	1	Spring, Compression	
123	See Note	NSS	Seal (Note: Use Item 200A)	
124	See Note	NSS	Capscrew #10 x 1/2 (Note: Not Available for Purchase)	
125	See Note	NSS	Nut #10 (Note: Not Available for Purchase)	
126	See Note	NSS	Flatwasher #10 (Note: Not Available for Purchase)	
127	70003454	1	Bracket, Switch Mounting	
128	4360517	1	Switch, Proximity	
200A	70001248	1	Seal Kit (Includes Items 102, 103, 105, 106, 113, 114, 115 & 123)	

FIGURE 2-8. TANK INSTALLATION - DIESEL (STEEL)(47.8 GAL)

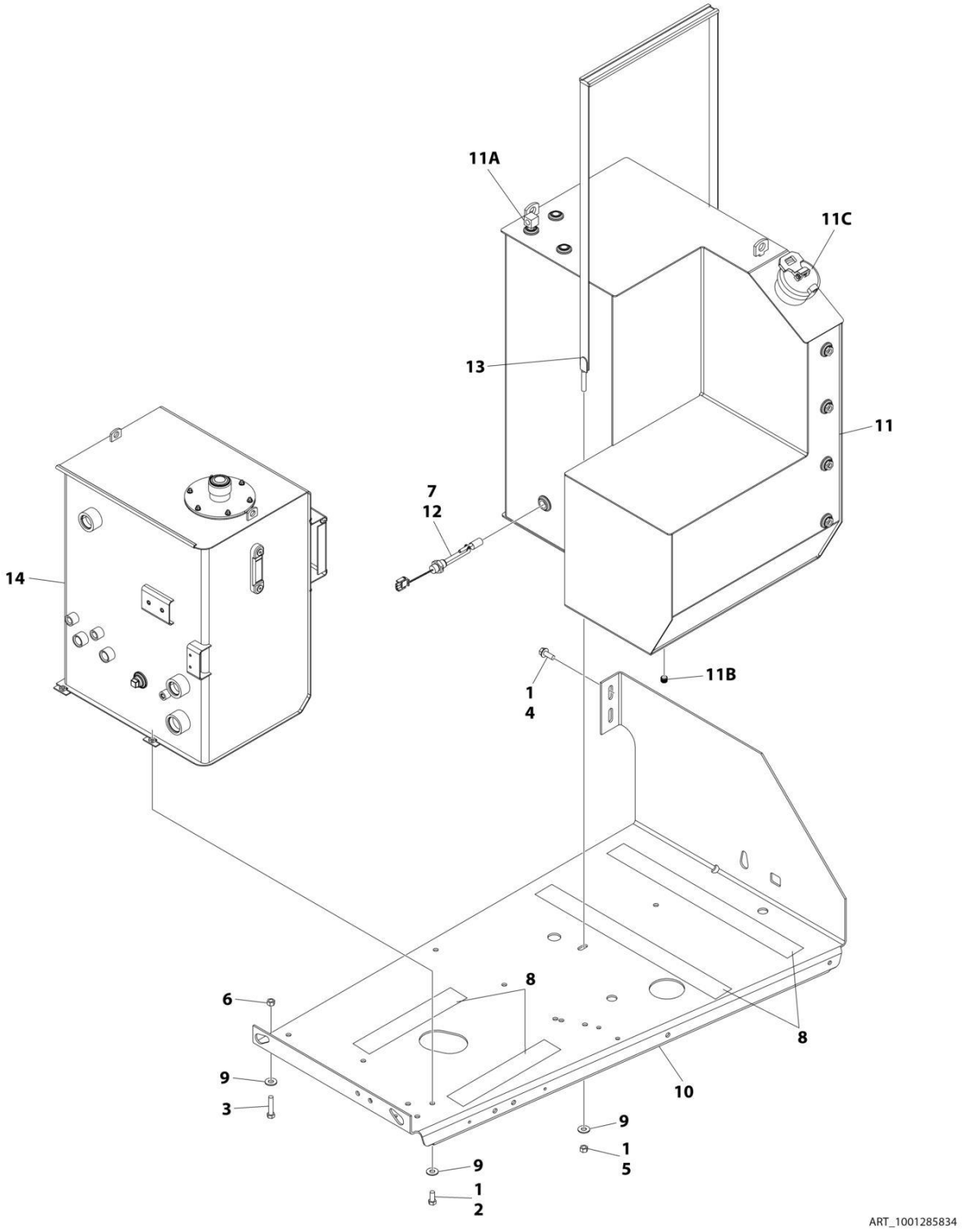

FIGURE 2-8. TANK INSTALLATION - DIESEL (STEEL)(47.8 GAL)

ITEM	PART NUMBER	QTY	DESCRIPTION	REV
	1001285834	Ref	TANK INSTALLATION	A
1	0100011	AR	Compound, Locking	
2	0641607	4	Bolt 3/8 x 7/8	
3	0641614	2	Bolt 3/8 x 1-3/4	
4	0811608	2	Bolt 3/8 x 1	
5	3311601	2	Nut 3/8	
6	3311605	2	Nut 3/8	
7	4360436	1	Switch, Fuel Level	
8	4420038	73 in /1.85m	Tape, Rubber	
9	4751600	8	Washer 3/8	
10	1001156190	1	Tray	
11	1001179040	1	Tank, Fuel (Includes Non-Locking Cap) (Diesel Machines)	
11A	70007508	1	Fitting and Pick-up Tube (Diesel Machines)	
11B	70002112	1	Fitting (Diesel Machines Only)	
11C	1001080707	1	Cap	
12	1001182997	AR	Adhesive	
13	1001231888	1	Strap Assembly (Includes Strap & Protective Strip)	
13	4240113	1	Strap, Tank	
14	1001285677	1	Hydraulic Tank Assembly (See Separate Breakdown in this Section)	

FIGURE 2-9. TANK INSTALLATION - DIESEL MACHINE (25 GAL)

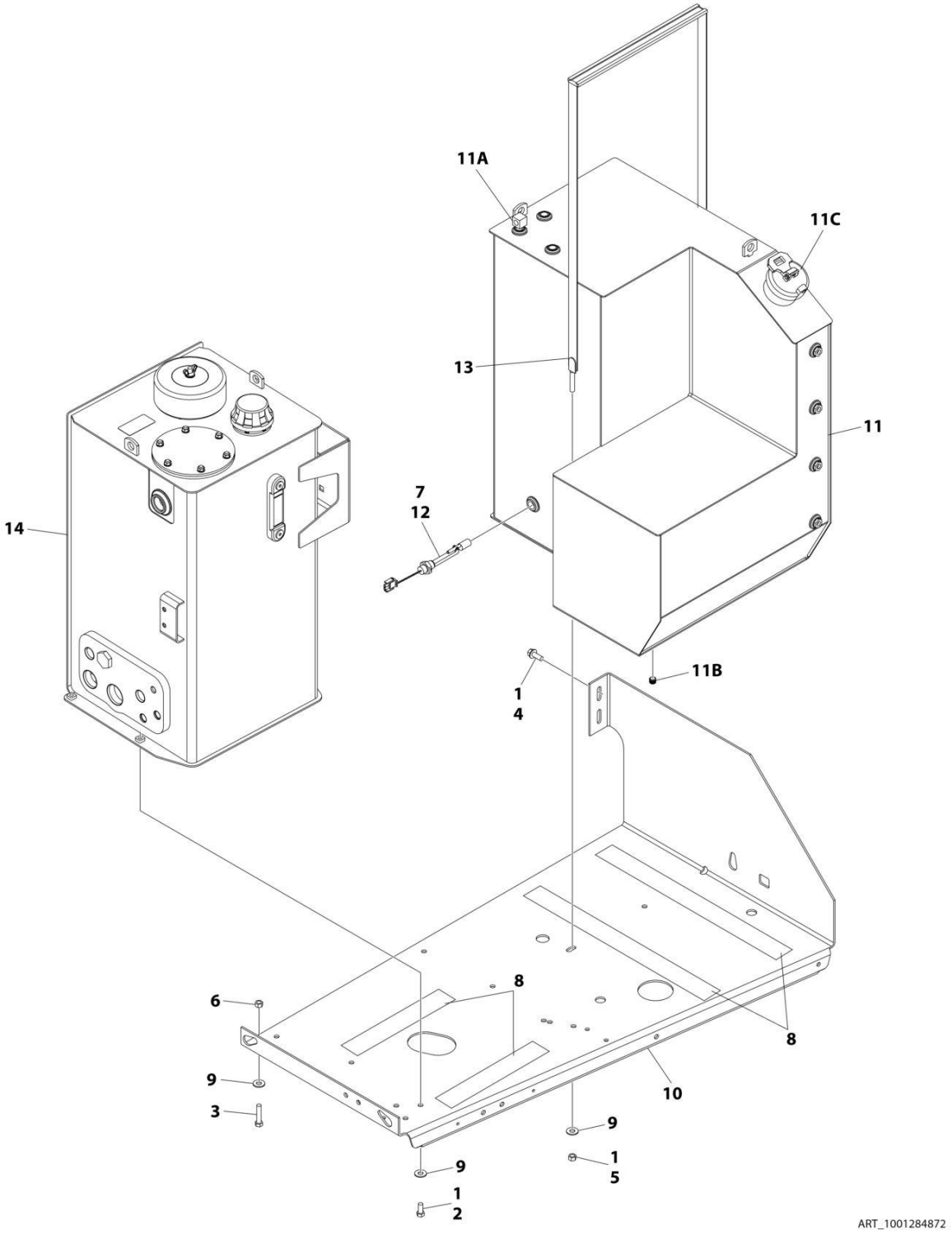

FIGURE 2-9. TANK INSTALLATION - DIESEL MACHINE (25 GAL)

ITEM	PART NUMBER	QTY	DESCRIPTION	REV
	1001284872	Ref	TANK INSTALLATION	A
1	0100011	AR	Compound, Locking	
2	0641607	4	Bolt 3/8 x 7/8	
3	0641614	2	Bolt 3/8 x 1-3/4	
4	0811608	2	Bolt 3/8 x 1	
5	3311601	2	Nut 3/8	
6	3311605	2	Nut 3/8	
7	4360436	1	Switch, Fuel Level	
8	4420038	73 in /1.85m	Tape, Rubber	
9	4751600	8	Washer 3/8	
10	1001156190	1	Tray	
11	1001179040	1	Tank, Fuel (Includes Non-Locking Cap) (Diesel Machines)	
11A	70007508	1	Fitting and Pick-up Tube (Diesel Machines)	
11B	70002112	1	Fitting (Diesel Machines Only)	
11C	1001080707	1	Cap	
12	1001182997	AR	Adhesive	
13	1001231888	1	Strap Assembly (Includes Strap & Protective Strip)	
13	4240113	1	Strap, Tank	
14	1001267678	1	Hydraulic Tank Assembly (See Separate Breakdown in this Section)	

FIGURE 2-10. TANK INSTALLATION - DIESEL MACHINE (FUEL TANK WITHOUT SIGHT GLASS)

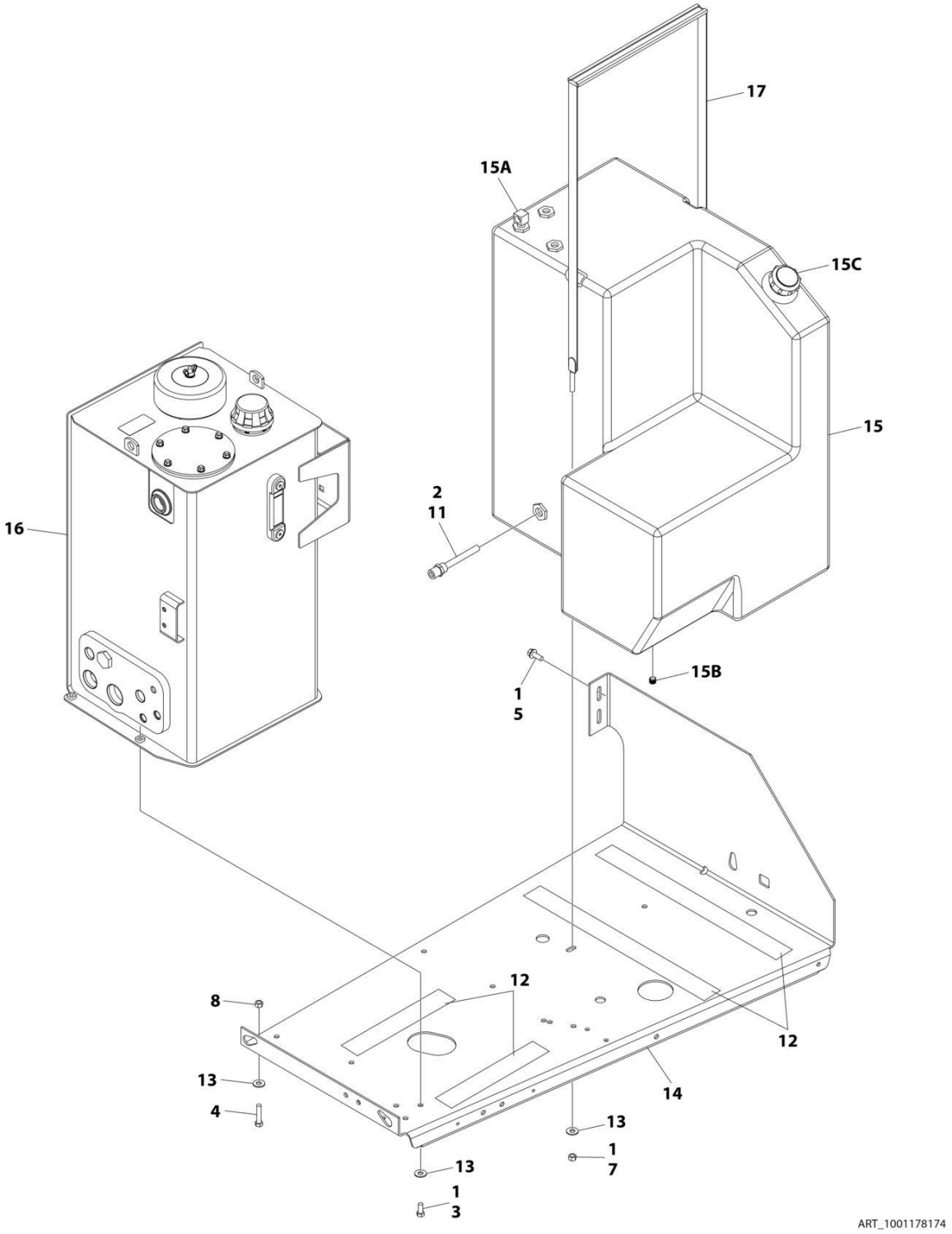

FIGURE 2-10. TANK INSTALLATION - DIESEL MACHINE (FUEL TANK WITHOUT SIGHT GLASS)

ITEM	PART NUMBER	QTY	DESCRIPTION	REV
	1001178174	Ref	TANK INSTALLATION	D
1	0100011	AR	Compound, Locking	
2	1001182997	AR	Adhesive	
3	0641607	4	Bolt 3/8 x 7/8	
4	0641614	2	Bolt 3/8 x 1-3/4	
5	0811608	2	Bolt 3/8 x 1	
7	3311601	2	Nut 3/8	
8	3311605	2	Nut 3/8	
11	4360436	1	Switch, Fuel Level	
12	4420038	73 in /1.85m	Tape, Rubber	
13	4751600	8	Washer 3/8	
14	1001156190	1	Tray	
15	1001173897	1	Tank, Fuel (Includes Non-Locking Cap) (Diesel Machines)	
15A	70004184	1	Fitting and Pick-up Tube (Diesel Machines)	
15B	2200222	1	Fitting (Diesel Machines Only)	
15B	0100020	AR	Sealant	
15C	7016314	1	Cap	
16	1001178057	1	Hydraulic Tank Assembly (See Separate Breakdown in this Section)	
17	1001231888	1	Strap Assembly (Includes Strap & Protective Strip)	
17	4240113	1	Strap, Tank	

FIGURE 2-11. TANK INSTALLATION - DIESEL MACHINE (FUEL TANK WITH SIGHT GLASS)

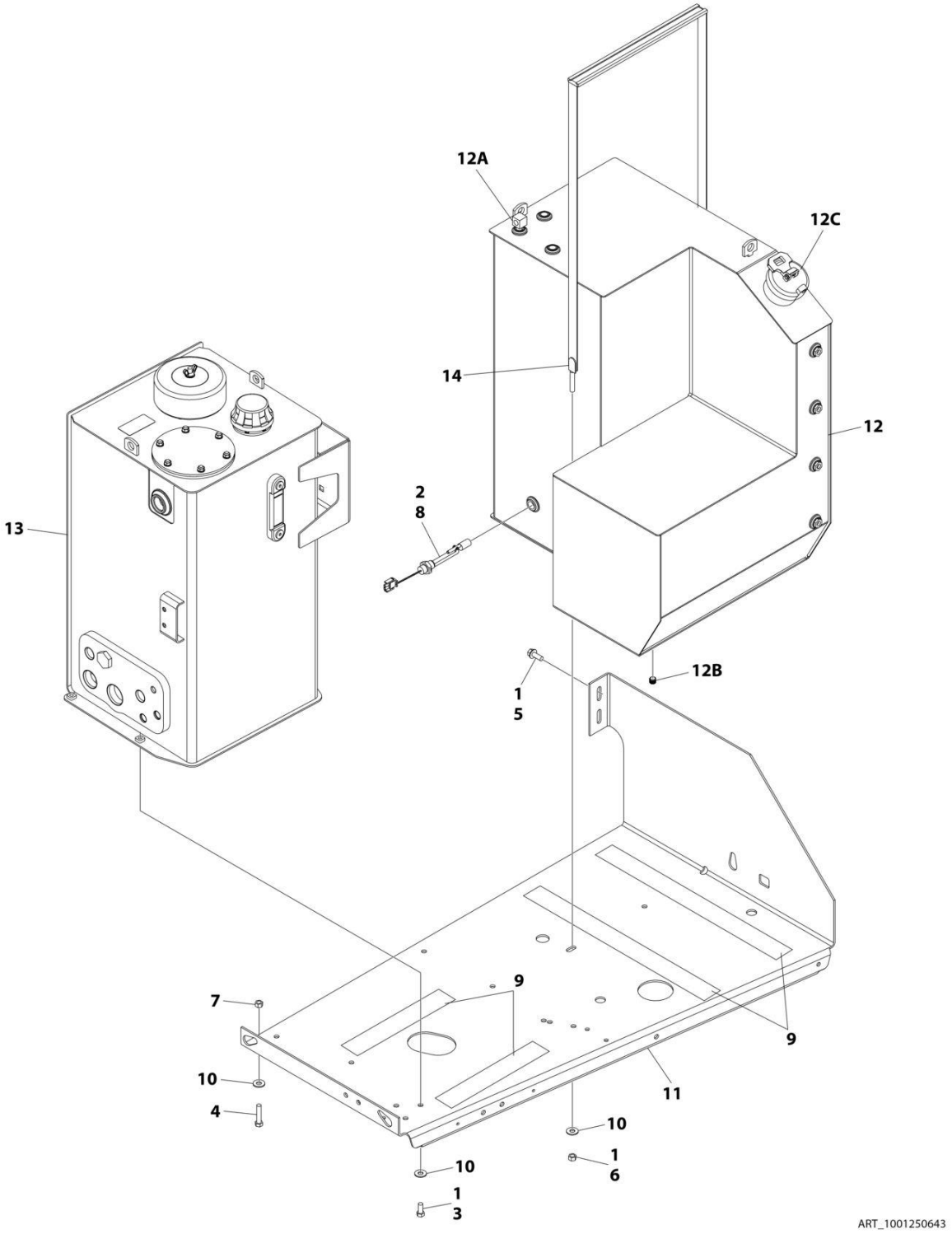

FIGURE 2-11. TANK INSTALLATION - DIESEL MACHINE (FUEL TANK WITH SIGHT GLASS)

ITEM	PART NUMBER	QTY	DESCRIPTION	REV
	1001250643	Ref	TANK INSTALLATION	A
1	0100011	AR	Compound, Locking	
2	1001182997	AR	Adhesive	
3	0641607	4	Bolt 3/8 x 7/8	
4	0641614	2	Bolt 3/8 x 1-3/4	
5	0811608	2	Bolt 3/8 x 1	
6	3311601	2	Nut 3/8	
7	3311605	2	Nut 3/8	
8	4360436	1	Switch, Fuel Level	
9	4420038	73 in /1.85m	Tape, Rubber	
10	4751600	8	Washer 3/8	
11	1001156190	1	Tray	
12	1001179040	1	Tank, Fuel (Includes Non-Locking Cap) (Diesel Machines)	
12A	70007508	1	Fitting and Pick-up Tube (Diesel Machines)	
12B	70002112	1	Fitting (Diesel Machines Only)	
12C	1001080707	1	Cap	
13	1001178057	1	Hydraulic Tank Assembly (See Separate Breakdown in this Section)	
14	1001231888	1	Strap Assembly (Includes Strap & Protective Strip)	
14	4240113	1	Strap, Tank	

FIGURE 2-12. TANK INSTALLATION - DIESEL ENGINE (47.8 GAL)

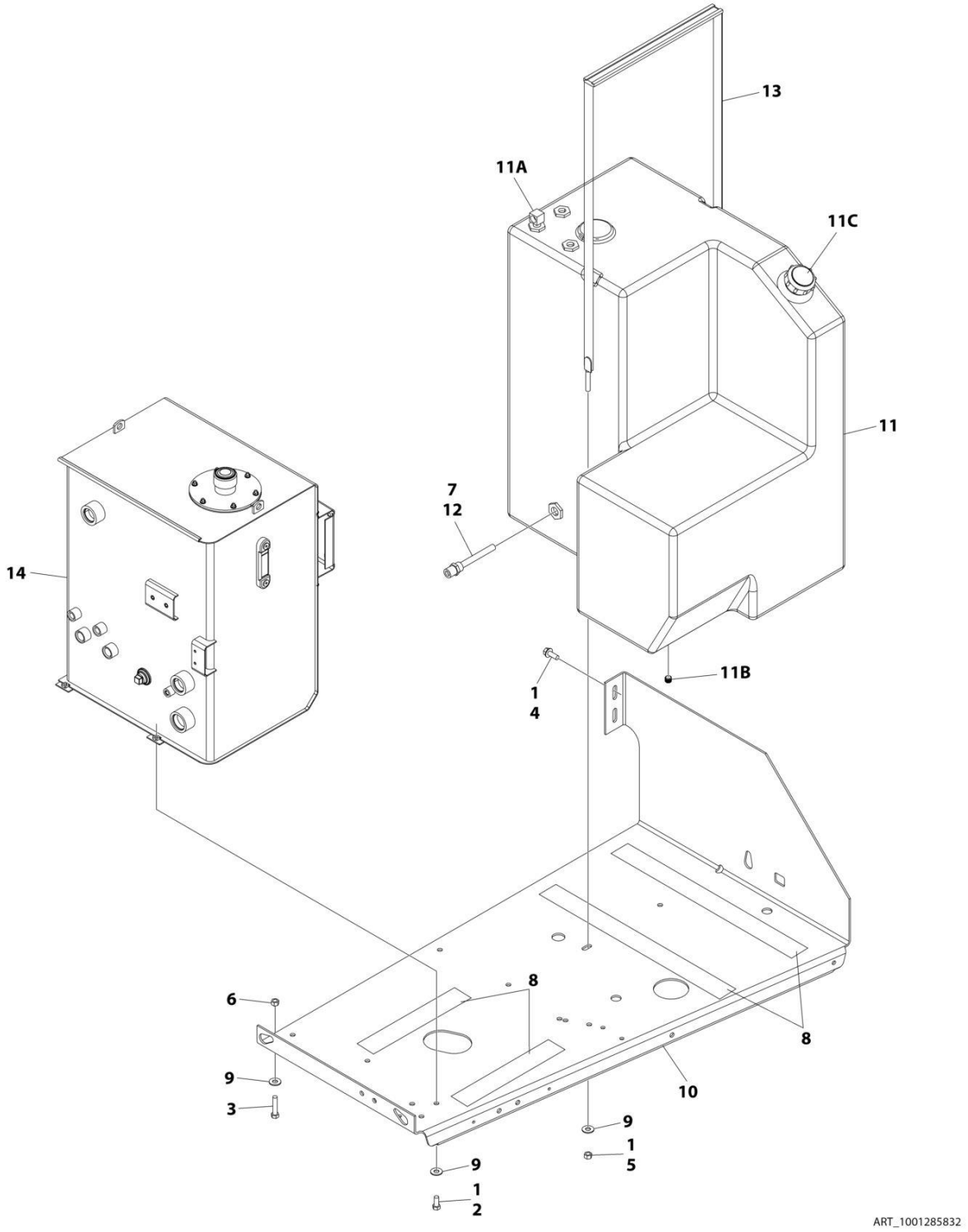

FIGURE 2-12. TANK INSTALLATION - DIESEL ENGINE (47.8 GAL)

ITEM	PART NUMBER	QTY	DESCRIPTION	REV
	1001285832	Ref	TANK INSTALLATION	A
1	0100011	AR	Compound, Locking	
2	0641607	4	Bolt 3/8 x 7/8	
3	0641614	2	Bolt 3/8 x 1-3/4	
4	0811608	2	Bolt 3/8 x 1	
5	3311601	2	Nut 3/8	
6	3311605	2	Nut 3/8	
7	4360436	1	Switch, Fuel Level	
8	4420038	73 in /1.85m	Tape, Rubber	
9	4751600	8	Washer 3/8	
10	1001156190	1	Tray	
11	1001173897	1	Tank, Fuel (Includes Non-Locking Cap) (Diesel Machines)	
11A	70004184	1	Fitting and Pick-up Tube (Diesel Machines)	
11B	2200222	1	Fitting (Diesel Machines Only)	
11B	0100020	AR	Sealant	
11C	7016314	1	Cap	
12	1001182997	AR	Adhesive	
13	1001231888	1	Strap Assembly (Includes Strap & Protective Strip)	
13	4240113	1	Strap, Tank	
14	1001285677	1	Hydraulic Tank Assembly (See Separate Breakdown in this Section)	

FIGURE 2-13. TANK INSTALLATION - DIESEL ENGINE (25 GAL)

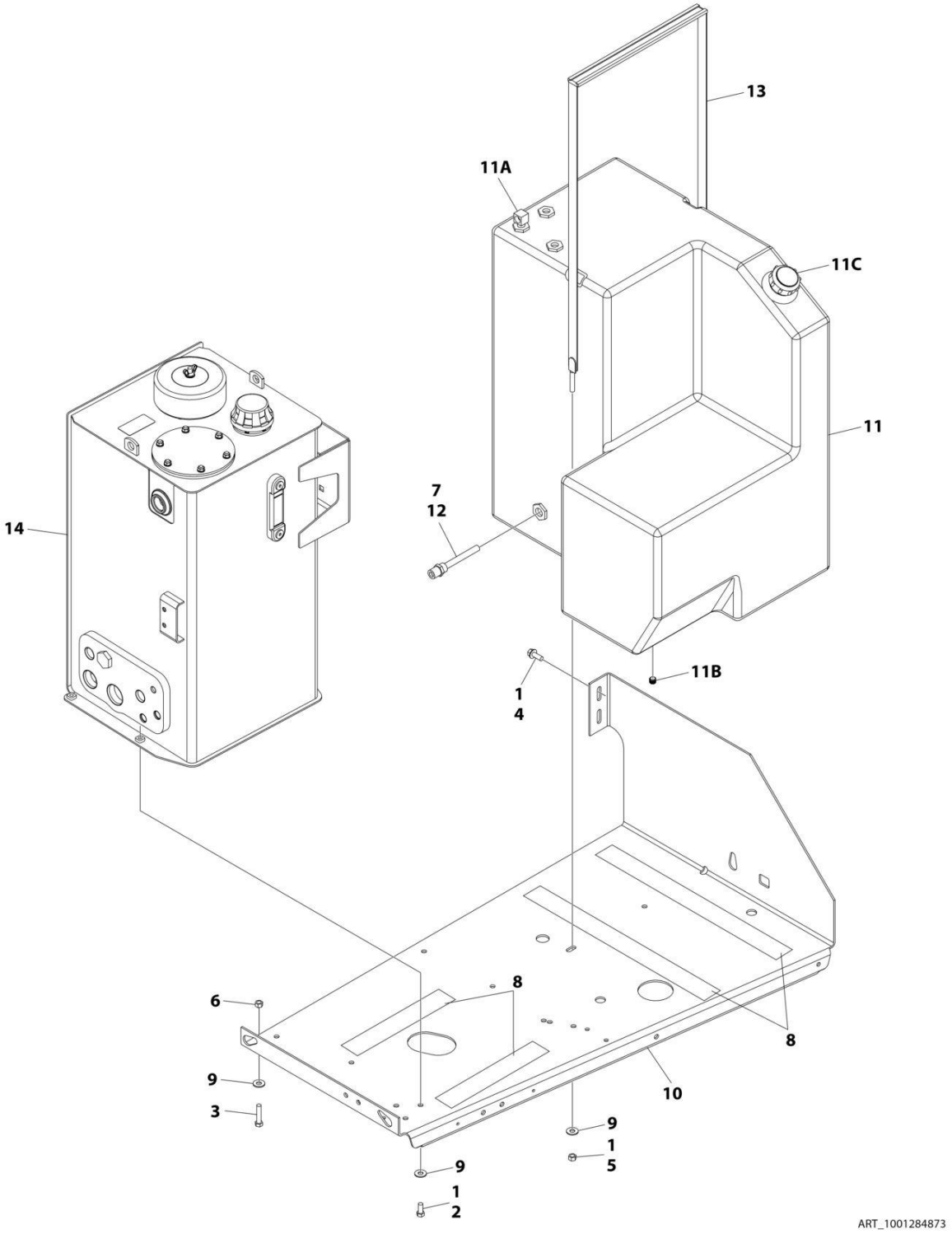

FIGURE 2-13. TANK INSTALLATION - DIESEL ENGINE (25 GAL)

ITEM	PART NUMBER	QTY	DESCRIPTION	REV
	1001284873	Ref	TANK INSTALLATION	A
1	0100011	AR	Compound, Locking	
2	0641607	4	Bolt 3/8 x 7/8	
3	0641614	2	Bolt 3/8 x 1-3/4	
4	0811608	2	Bolt 3/8 x 1	
5	3311601	2	Nut 3/8	
6	3311605	2	Nut 3/8	
7	4360436	1	Switch, Fuel Level	
8	4420038	73 in /1.85m	Tape, Rubber	
9	4751600	8	Washer 3/8	
10	1001156190	1	Tray	
11	1001173897	1	Tank, Fuel (Includes Non-Locking Cap) (Diesel Machines)	
11A	70004184	1	Fitting and Pick-up Tube (Diesel Machines)	
11B	2200222	1	Fitting (Diesel Machines Only)	
11B	0100020	AR	Sealant	
11C	7016314	1	Cap	
12	1001182997	AR	Adhesive	
13	1001231888	1	Strap Assembly (Includes Strap & Protective Strip)	
13	4240113	1	Strap, Tank	
14	1001267678	1	Hydraulic Tank Assembly (See Separate Breakdown in this Section)	

FIGURE 2-14. TANK INSTALLATION - GAS ENGINE (47.8 GAL)

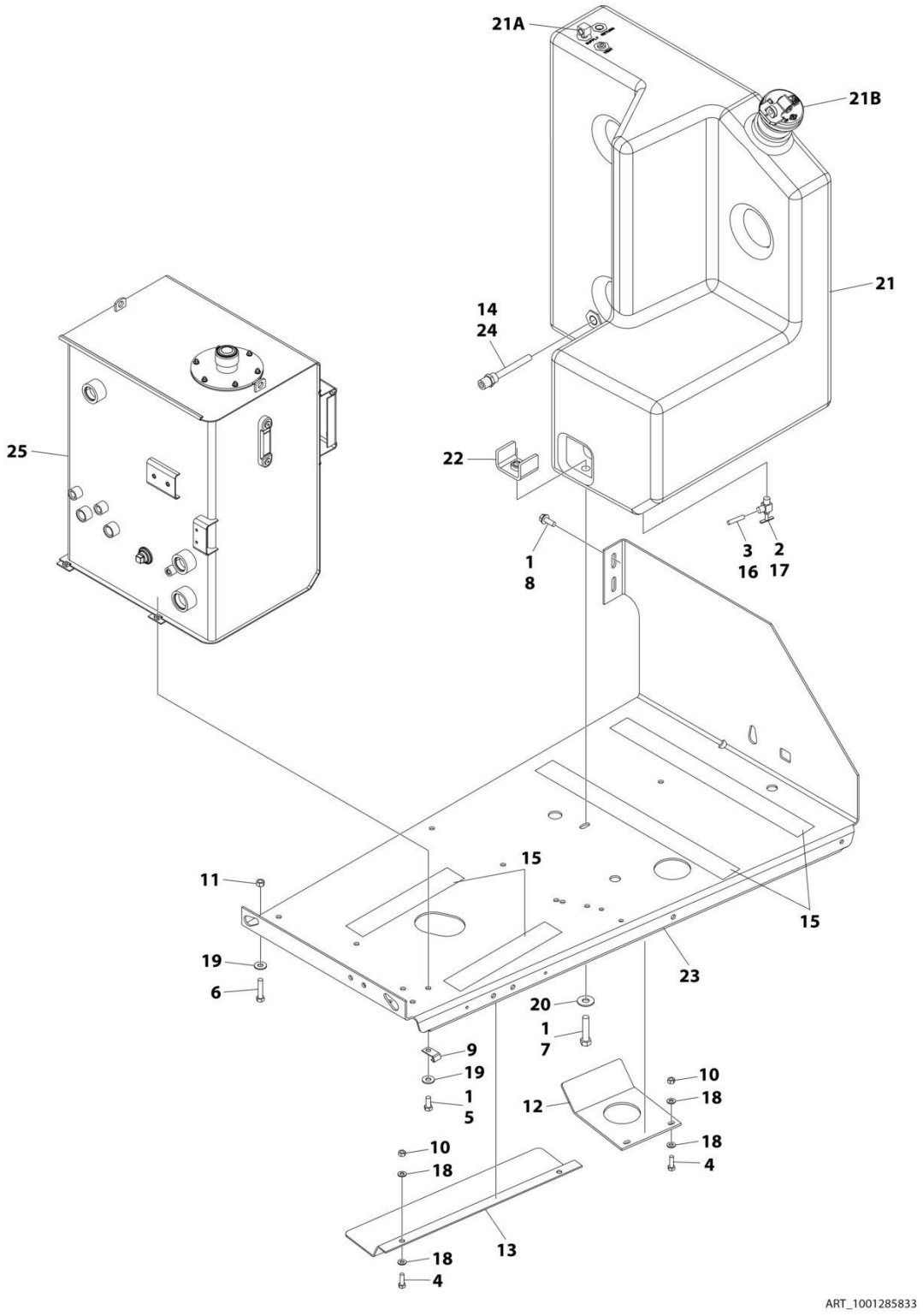

FIGURE 2-14. TANK INSTALLATION - GAS ENGINE (47.8 GAL)

ITEM	PART NUMBER	QTY	DESCRIPTION	REV
	1001285833	Ref	TANK INSTALLATION	A
1	0100011	AR	Compound, Locking	
2	0100020	AR	Sealant, Pipe	
3	0100062	AR	Compound, Locking	
4	0641508	4	Bolt 5/16 x 1	
5	0641607	4	Bolt 3/8 x 7/8	
6	0641614	2	Bolt 3/8 x 1-3/4	
7	0641818	2	Bolt 1/2 x 2-1/4	
8	0811608	2	Bolt 3/8 x 1	
9	1320223	1	Clamp	
10	3311505	4	Nut 5/16	
11	3311605	2	Nut 3/8	
12	3572423	1	Plate, Valve Needle	
13	3576755	1	Cover, Fuel Pump	
14	4360436	1	Switch, Fuel Level	
15	4420038	45 in /1.14m	Tape, Rubber (Gas Machines)	
16	4568119	1	Tube, Fuel	
17	4641022	1	Valve, Needle	
18	4711500	8	Washer 5/16	
19	4751600	2	Washer 3/8	
20	4751800	2	Washer 1/2	
21	1001111514	1	Tank, Fuel (Includes Non-Locking Cap) (Gas Machines)	
21A	70004149	1	Fitting and Pick-up Tube (Gas Machines)	
21B	70002715	1	Cap	
21B	70002716	1	Adapter, Cap	
22	1001118133	2	Bracket	
23	1001156190	1	Tray	
24	1001182997	AR	Adhesive	
25	1001285677	1	Hydraulic Tank Assembly (See Separate Breakdown in this Section)	

FIGURE 2-15. TANK INSTALLATION - GAS ENGINES

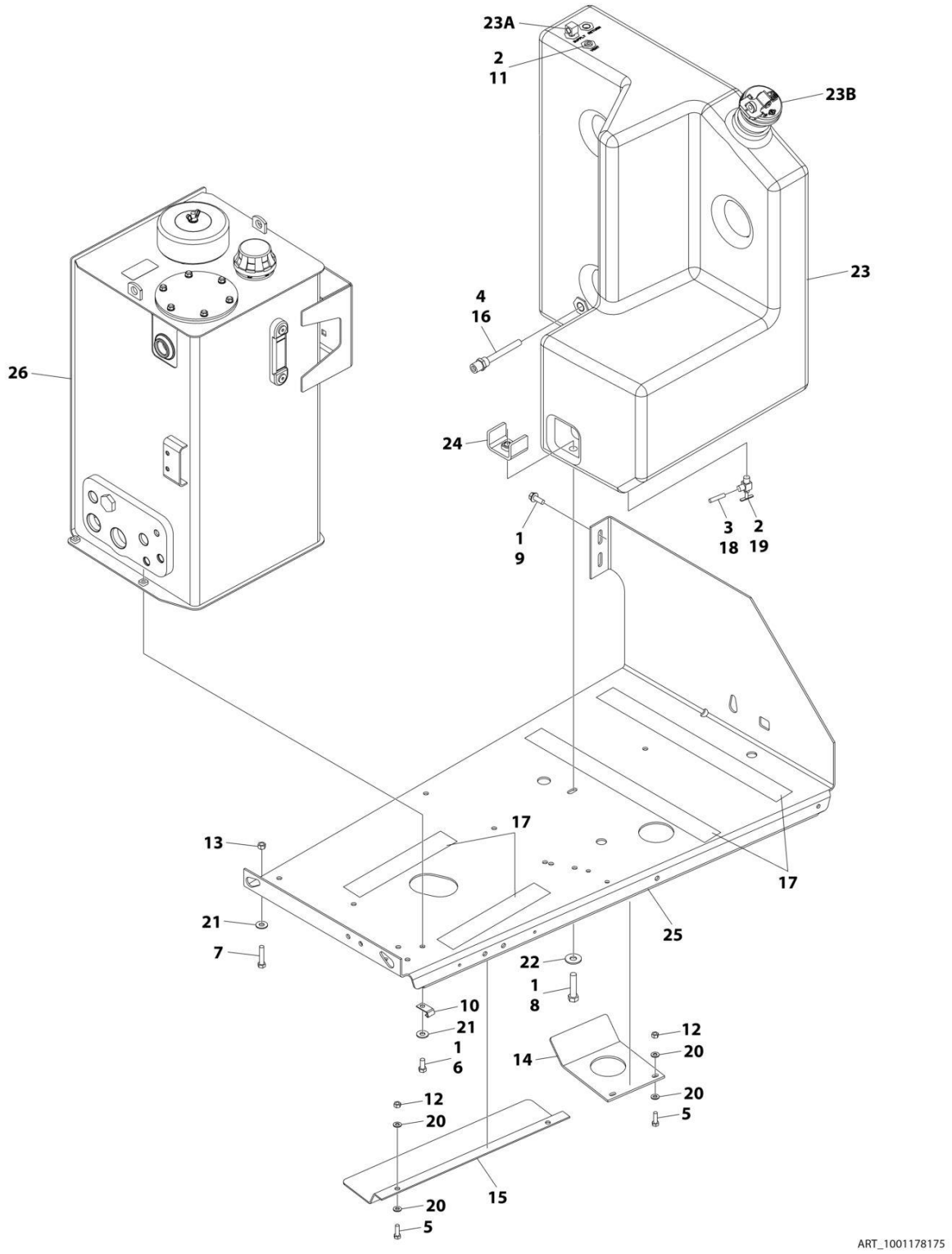

FIGURE 2-15. TANK INSTALLATION - GAS ENGINES

ITEM	PART NUMBER	QTY	DESCRIPTION	REV
	1001178175	Ref	TANK INSTALLATION	B
1	0100011	AR	Compound, Locking	
2	0100020	AR	Sealant, Pipe	
3	0100062	AR	Compound, Locking	
4	1001182997	AR	Adhesive	
5	0641508	4	Bolt 5/16 x 1	
6	0641607	4	Bolt 3/8 x 7/8	
7	0641614	2	Bolt 3/8 x 1-3/4	
8	0641818	2	Bolt 1/2 x 2-1/4	
9	0811608	2	Bolt 3/8 x 1	
10	1320223	1	Clamp	
11	2200233	1	Plug	
12	3311505	4	Nut 5/16	
13	3311605	2	Nut 3/8	
14	3572423	1	Plate, Valve Needle	
15	3576755	1	Cover, Fuel Pump	
16	4360436	1	Switch, Fuel Level	
17	4420038	45 in /1.14m	Tape, Rubber (Gas Machines)	
18	4568119	1	Tube, Fuel	
19	4641022	1	Valve, Needle	
20	4711500	8	Washer 5/16	
21	4751600	2	Washer 3/8	
22	4751800	2	Washer 1/2	
23	1001111514	1	Tank, Fuel (Includes Non-Locking Cap) (Gas Machines)	
23A	70004149	1	Fitting and Pick-up Tube (Gas Machines)	
23B	70002715	1	Cap	
23B	70002716	1	Adapter, Cap	
24	1001118133	2	Bracket	
25	1001156190	1	Tray	
26	1001178057	1	Hydraulic Tank Assembly (See Separate Breakdown in this Section)	

FIGURE 2-16. TANK INSTALLATION - GAS ENGINES (25 GAL)

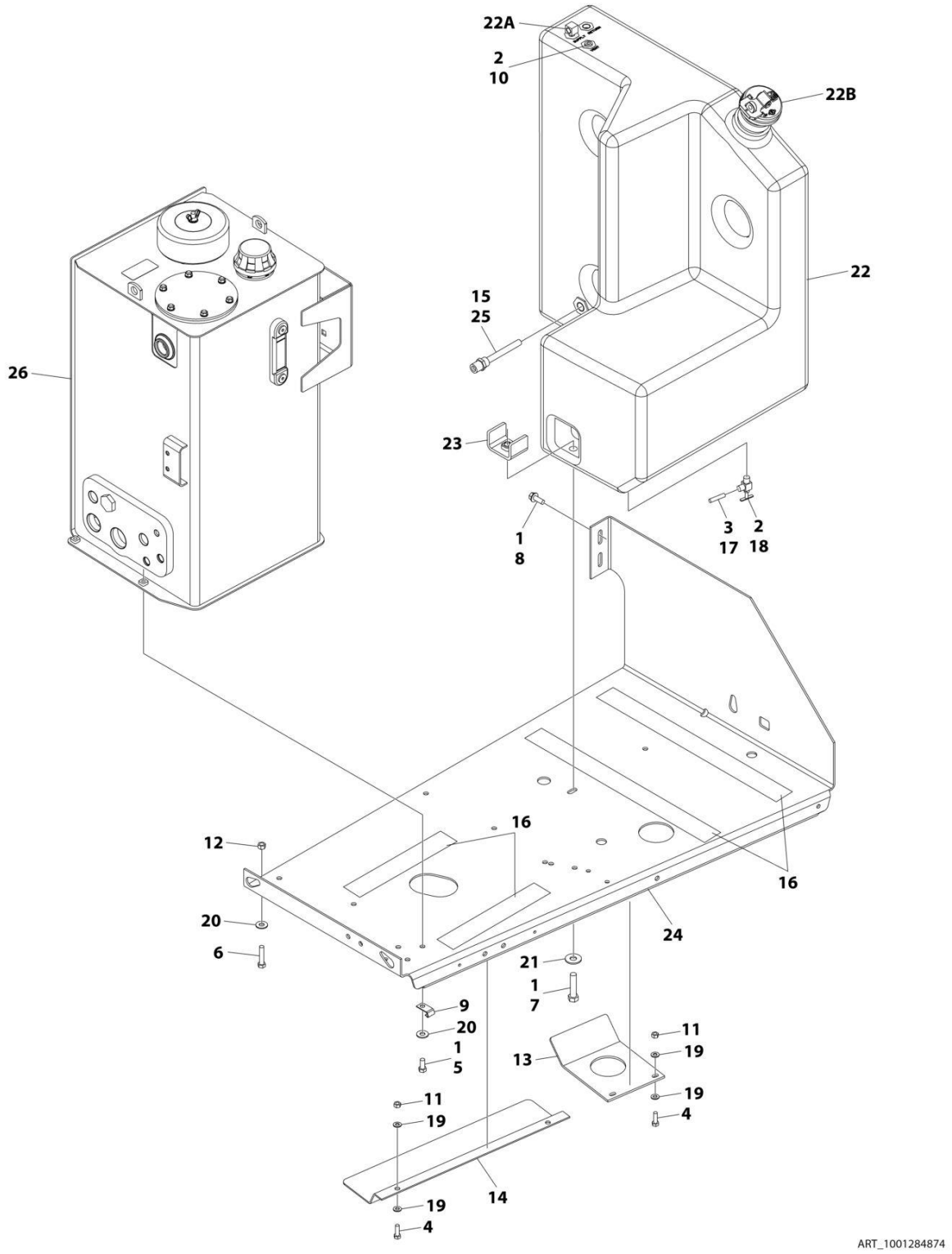

FIGURE 2-16. TANK INSTALLATION - GAS ENGINES (25 GAL)

ITEM	PART NUMBER	QTY	DESCRIPTION	REV
	1001284874	Ref	TANK INSTALLATION	A
1	0100011	AR	Compound, Locking	
2	0100020	AR	Sealant, Pipe	
3	0100062	AR	Compound, Locking	
4	0641508	4	Bolt 5/16 x 1	
5	0641607	4	Bolt 3/8 x 7/8	
6	0641614	2	Bolt 3/8 x 1-3/4	
7	0641818	2	Bolt 1/2 x 2-1/4	
8	0811608	2	Bolt 3/8 x 1	
9	1320223	1	Clamp	
10	2200233	1	Plug	
11	3311505	4	Nut 5/16	
12	3311605	2	Nut 3/8	
13	3572423	1	Plate, Valve Needle	
14	3576755	1	Cover, Fuel Pump	
15	4360436	1	Switch, Fuel Level	
16	4420038	45 in /1.14m	Tape, Rubber (Gas Machines)	
17	4568119	1	Tube, Fuel	
18	4641022	1	Valve, Needle	
19	4711500	8	Washer 5/16	
20	4751600	2	Washer 3/8	
21	4751800	2	Washer 1/2	
22	1001111514	1	Tank, Fuel (Includes Non-Locking Cap) (Gas Machines)	
22A	70004149	1	Fitting and Pick-up Tube (Gas Machines)	
22B	70002715	1	Cap	
22B	70002716	1	Adapter, Cap	
23	1001118133	2	Bracket	
24	1001156190	1	Tray	
25	1001182997	AR	Adhesive	
26	1001267678	1	Hydraulic Tank Assembly (See Separate Breakdown in this Section)	

FIGURE 2-17. HYDRAULIC TANK ASSEMBLY

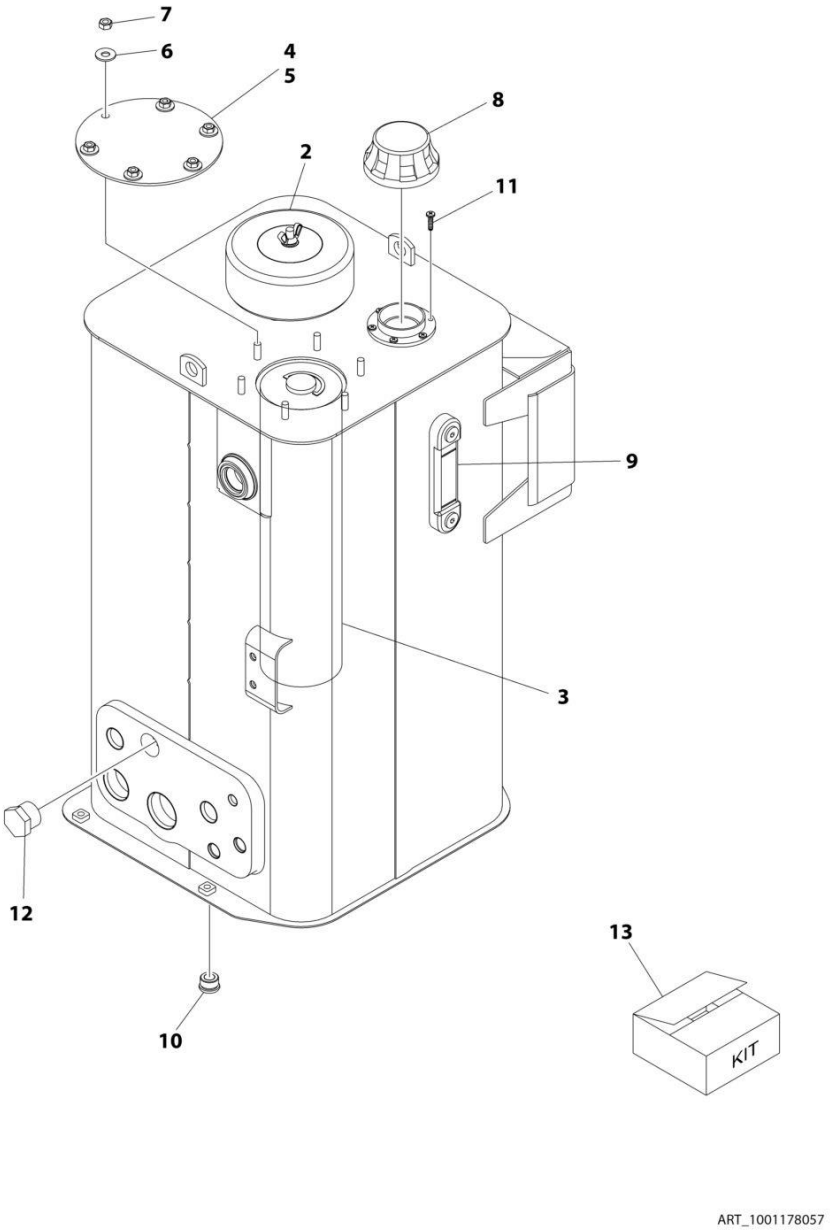

FIGURE 2-17. HYDRAULIC TANK ASSEMBLY

ITEM	PART NUMBER	QTY	DESCRIPTION	REV
	1001178057	Ref	HYDRAULIC TANK ASSEMBLY	D
2	70005708	1	Breather Assembly (Includes Breather, Element and Wingnut)	
2	See Note	NSS	Element, Breather (Note: Use p/n 70005708 or Item 13)	
3	See Note	NSS	Element, Hydraulic (Note: Use Item 13)	
4	70002839	1	Gasket	
5	See Note	NSS	Cover (Note: Not Available for Purchase)	
6	83304173	6	Washer 5/16	
7	70004199	6	Nut 5/16	
8	70002838	1	Cap, Fill	
9	7024441	1	Gauge, Level	
10	70002112	1	Plug	
11	70004795	6	Screw #10 x 3/4	
12	See Note	NSS	Plug (Note: Not Available - Purchase Locally)	
13	70002814	1	Hydraulic Tank Service Kit (Includes Items 2-4)	

FIGURE 2-18. HYDRAULIC TANK ASSEMBLY (25 GAL)

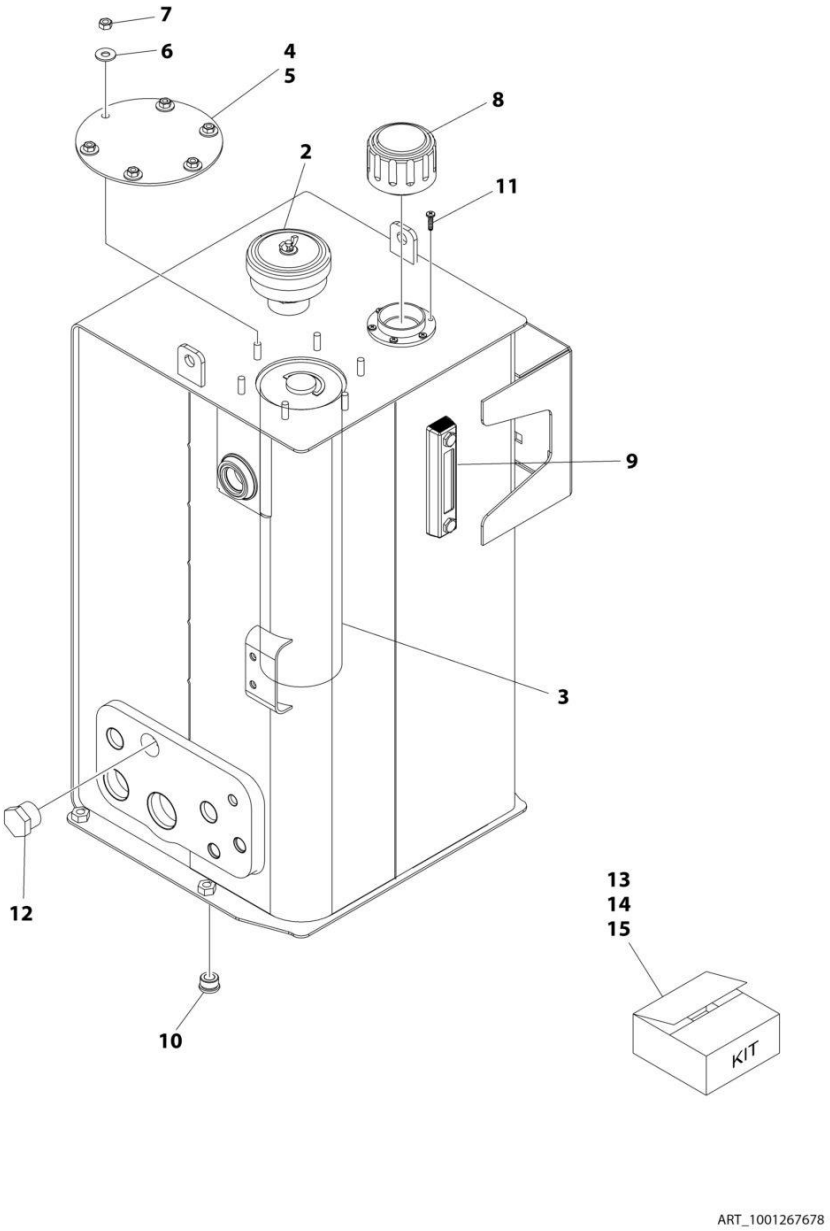

FIGURE 2-18. HYDRAULIC TANK ASSEMBLY (25 GAL)

ITEM	PART NUMBER	QTY	DESCRIPTION	REV
	1001267678	REF	HYDRAULIC TANK ASSEMBLY	A
1	See Note	NSS	Hydraulic Tank Weldment (Not Shown) (Note: Not Available for Purchase)	
2	See Note	NSS	Breather Assembly (Note: Use Item 13)	
3	See Note	NSS	Element, Filter (Note: Use Item Use Item 14)	
4	70002839	1	Gasket	
5	See Note	NSS	Cover (Note: Not Available for Purchase)	
6	83304173	6	Washer 1/4	
7	70004199	6	Nut 5/16	
8	70002838	1	Cap, Fill	
9	70024441	1	Gauge, Level	
10	70002112	1	Plug	
11	70004795	6	Screw 10 x 3/4	
12	See Note	NSS	Plug (Note: Not Available for Purchase)	
13	70007726	1	Breather Kit (Note: Includes Item 2)	
14	70007727	1	Return Filter Kit (Note: Includes Item 3)	
15	70007725	1	Level Gauge Kit	

FIGURE 2-19. HYDRAULIC TANK ASSEMBLY (47.8 GAL)

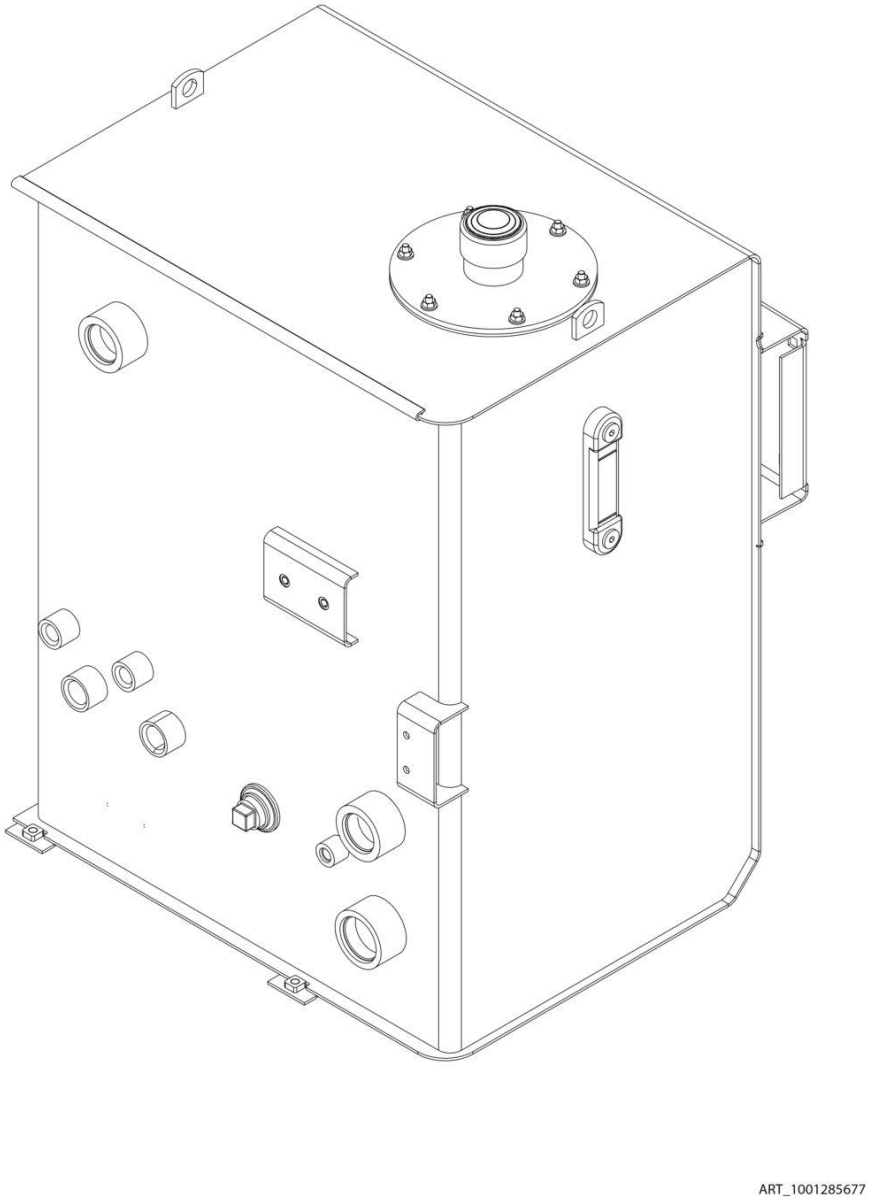

FIGURE 2-19. HYDRAULIC TANK ASSEMBLY (47.8 GAL)

ITEM	PART NUMBER	QTY	DESCRIPTION	REV
	1001285677	Ref	HYDRAULIC TANK ASSEMBLY	A
	See Note	Ref	Note: No Service Parts Available at Time of Printing	

FIGURE 2-20. AUXILIARY POWER INSTALLATION - WITHOUT BATTERY DISCONNECT

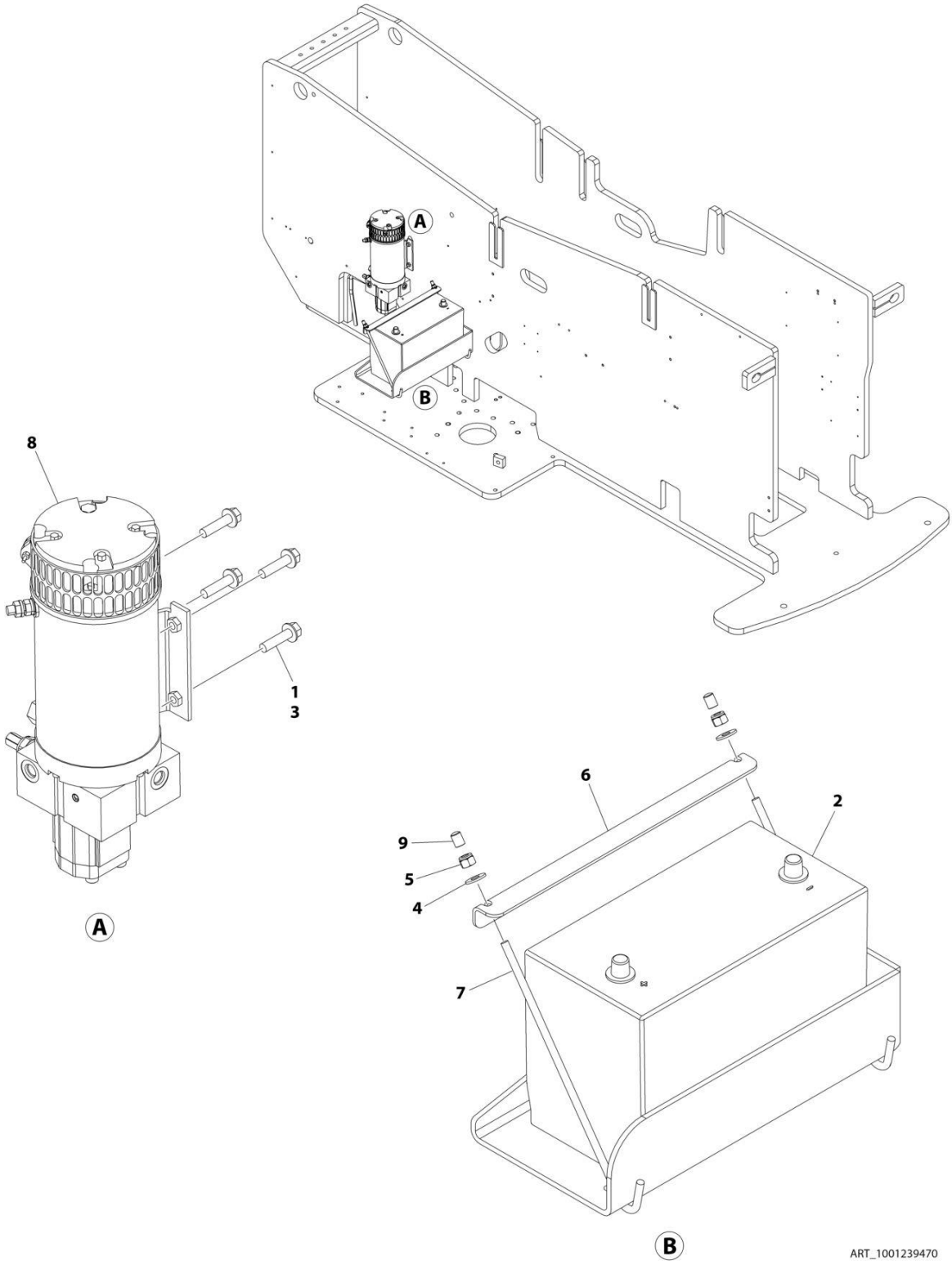

FIGURE 2-20. AUXILIARY POWER INSTALLATION - WITHOUT BATTERY DISCONNECT

ITEM	PART NUMBER	QTY	DESCRIPTION	REV
	1001239470	Ref	AUXILIARY POWER INSTALLATION	A
1	0100011	AR	Compound, Locking	
2	0400075	1	Battery	
3	0811612	4	Screw 3/8 x 1-1/2	
4	4751500	2	Washer 5/16	
5	88521205	2	Nut 5/16	
6	91401281	1	Bracket, Battery Hold Down	
7	1001093382	2	J - Bolt	
8	1001137460	1	Auxillary Power Pump/ Motor Assembly (See Separate Breakdown in this Section)	
9	1001218572	2	Cap	

FIGURE 2-21. AUXILIARY POWER INSTALLATION - WITH BATTERY DISCONNECT

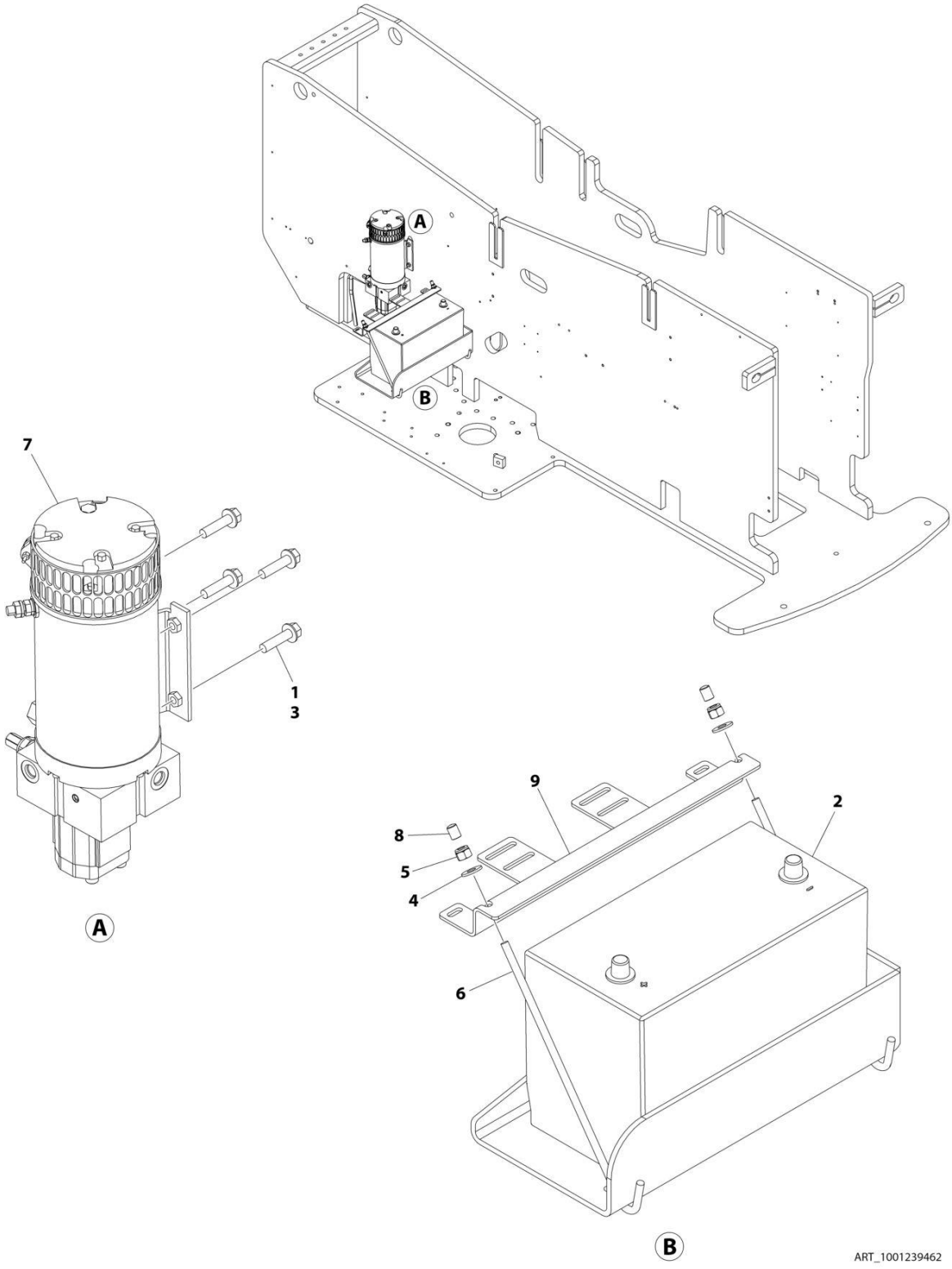

FIGURE 2-21. AUXILIARY POWER INSTALLATION - WITH BATTERY DISCONNECT

ITEM	PART NUMBER	QTY	DESCRIPTION	REV
	1001239462	Ref	AUXILIARY POWER INSTALLATION	A
1	0100011	AR	Compound, Locking	
2	0400075	1	Battery	
3	0811612	4	Screw 3/8 x 1-1/2	
4	4751500	2	Washer 5/16	
5	88521205	2	Nut 5/16	
6	1001093382	2	J - Bolt	
7	1001137460	1	Auxiliary Power Pump/Motor Assembly (See Separate Breakdown in this Section)	
8	1001218572	2	Cap	
9	1001236303	1	Bracket, Battery Hold Down	

FIGURE 2-22. AUXILIARY POWER PUMP/MOTOR ASSEMBLY

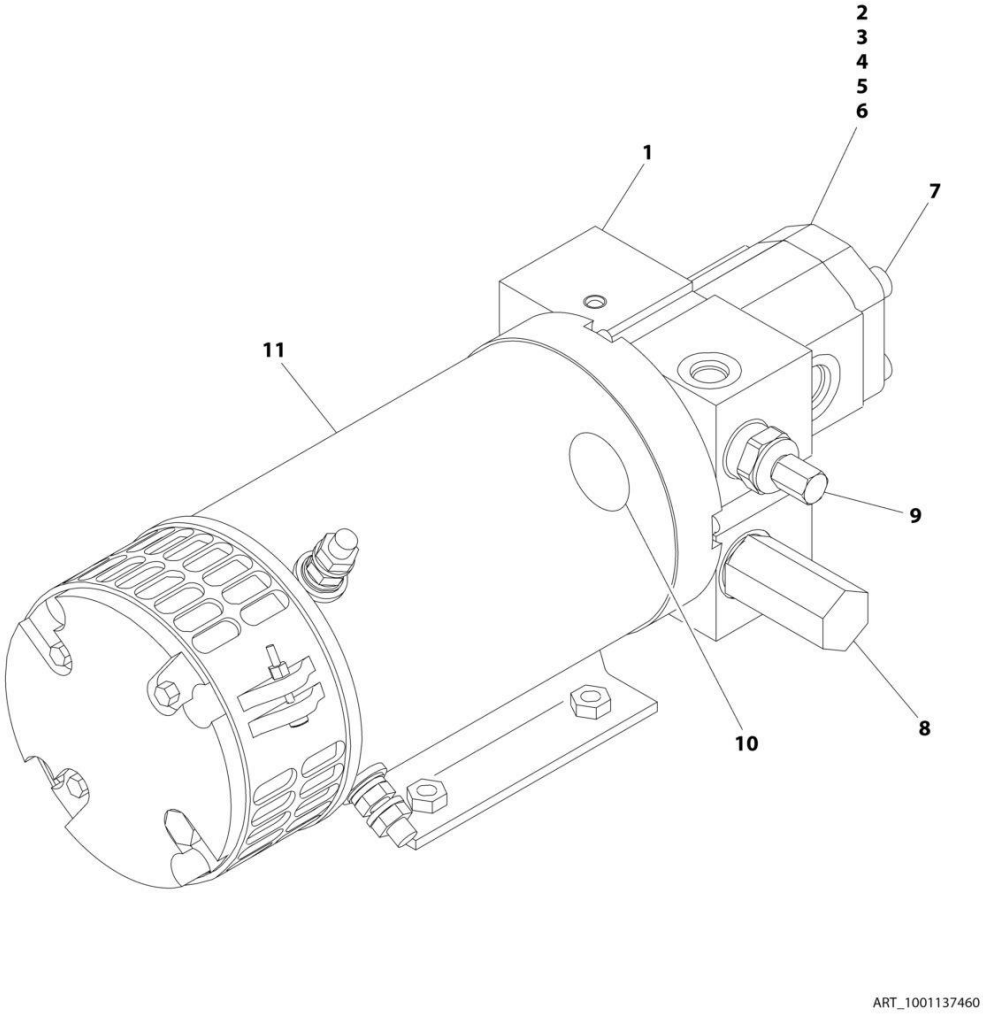

FIGURE 2-22. AUXILIARY POWER PUMP/MOTOR ASSEMBLY

ITEM	PART NUMBER	QTY	DESCRIPTION	REV
	1001137460	Ref	AUXILIARY PUMP ASSEMBLY	A
1	70004125	1	Base Assembly	
1	70003993	1	Seal, Shaft	
2	See Note	NSS	Pin, Dowel (Note: Use Item 1)	
3	See Note	NSS	O-Ring (Note: Use Item 1)	
4	See Note	NSS	Pump (Note: Use Item 1)	
5	See Note	NSS	O-Ring (Note: Use Item 1)	
6	See Note	NSS	Cover, Rear (Note: Use Item 1)	
7	See Note	NSS	Screw (Note: Use Item 1)	
8	70003989	1	Valve, Logic	
9	See Note	1	Valve, Relief (Note: Use Item 1)	
10	See Note	1	Shaft, Intermediate (Note: Use Item 1)	
11	70003992	1	Motor	

FIGURE 2-23. GROUND CONTROL BOX ASSEMBLY - WITH DEUTZ D2011 ENGINES - WITH DIGITAL DISPLAY (ANSI EXPORT LRC AND AUSTRALIAN SPECS)

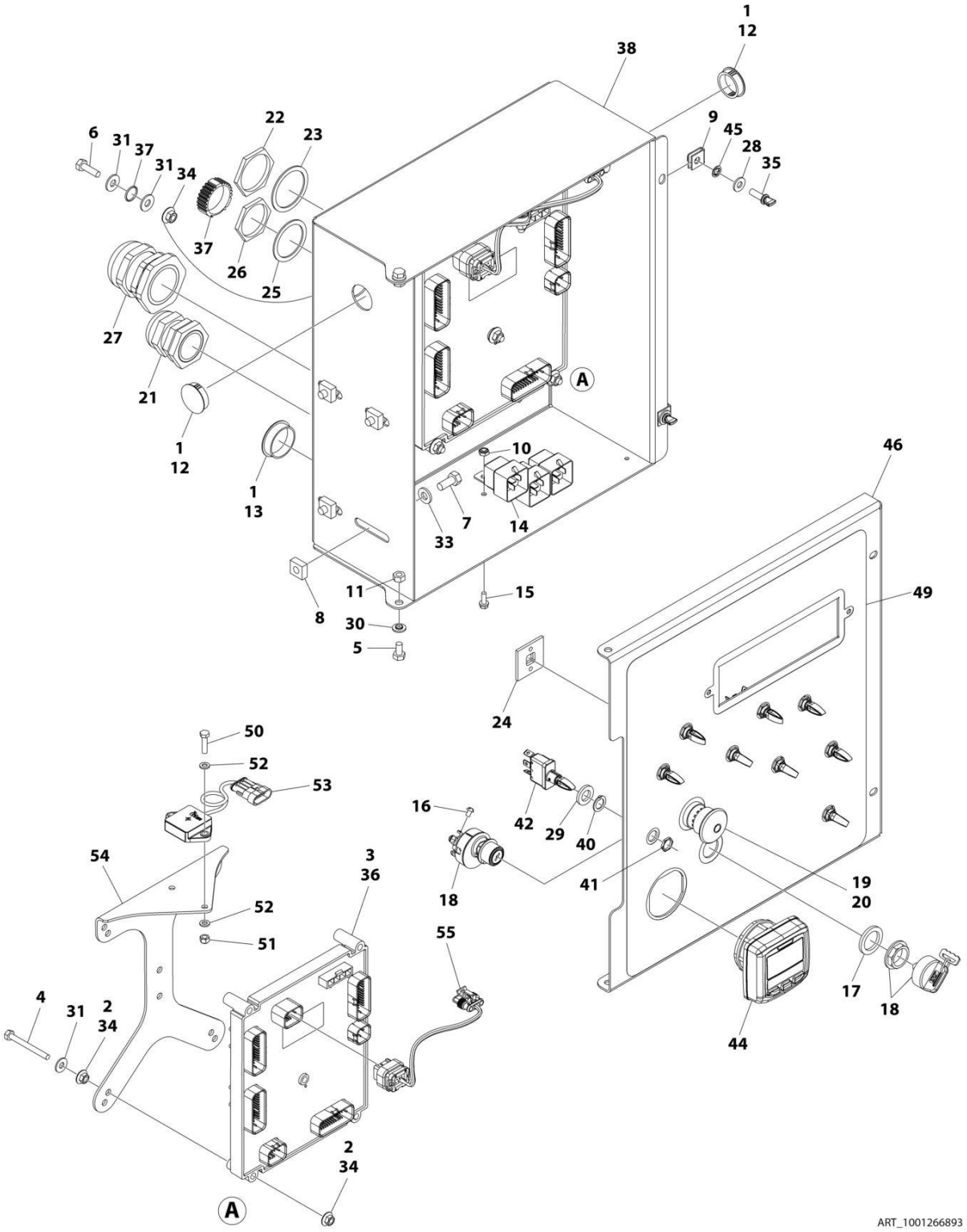

FIGURE 2-23. GROUND CONTROL BOX ASSEMBLY - WITH DEUTZ D2011 ENGINES - WITH DIGITAL DISPLAY (ANSI EXPORT LRC AND AUSTRALIAN SPECS)

ITEM	PART NUMBER	QTY	DESCRIPTION	REV
	1001266893	Ref	GROUND CONTROL BOX ASSEMBLY	B
1	0100009	AR	Sealant	
2	0100011	AR	Compound, Locking	
3	0100048	AR	Grease, Dielectric	
4	0630548	5	Bolt 2-1/2	
5	0641404	2	Bolt 1/4 x 1/2	
6	0641407	1	Bolt 1/4 x 7/8	
7	0641506	4	Bolt 5/16 x 3/4	
8	3300205	4	Nut, Retainer	
9	3300353	2	Nut, Tinnerman	
10	3300408	3	Nut, Nylon Insert	
11	3311405	2	Nut 1/4	
12	3520031	2	Plug	
13	3520035	1	Plug	
14	3740049	3	Relay	
15	3900268	3	Screw #10x1/2	
16	3910804	6	Screw #8 x 1/4	
17	4070991	1	Shim	
18	4360469	1	Switch, Key	
18	2860030	1 Set	Key Replacement	
19	4360475	1	Switch, Emergency Stop	
19	7020175	1	Cap, Mushroom	
19	7020176	1	Block, Contact	
20	4360476	1	Switch, Contact Block	
21	4460426	1	Connector, Strain Relief	
22	4460470	1	Nut, Terminal	
23	4460471	1	Lockwasher, Terminal	
24	4460488	6	Mounting Base, Terminal	
25	4460496	1	Washer, Terminal	
26	4460497	1	Nut, Terminal	
27	4460526	1	Connector, Strain Relief	
28	4711400	2	Washer 1/4	
29	4740397	9	Spacer	
30	4740518	2	Washer	
31	4751400	7	Washer 1/4	
33	4891500	4	Washer 5/16	
34	77143013	11	Nut 1/4	
35	1001103308	2	Thumbscrew 1/4 x 3/4	
36	1001103667	1	Module, Ground Control (Please Verify Part Number on Module Decal Before Purchasing) (Note: Recalibration Required When Replaced)	
36	1001280600	1	Module, Ground Control (Please Verify Part Number on Module Decal Before Purchasing) (Note: Recalibration Required When Replaced)	
37	1001106736	1	Cap, Dust	
38	1001152175	1	Box	
39	1001153713	1	Engine Harness (Not Shown - See Separate Breakdown in ELECTRICAL Section)	
40	1001155043	9	Washer	
41	1001155044	9	Nut 15/32	

ITEM	PART NUMBER	QTY	DESCRIPTION	REV
42	1001155045	9	Switch, Toggle	
43	1001170808	1	Control Valve Harness (Not Shown - See Separate Breakdown in ELECTRICAL Section)	
44	1001171482	1	Gauge, Display	
45	1001188874	2	Nut	
46	1001263352	1	Lid	
47	1001266628	1	Ground Control Box Harness (Not Shown - See Separate Breakdown in ELECTRICAL Section)	
49	1001266876	1	Decal - Ground Control Box	
50	0760612	2	Bolt M6 x 25	
51	3290605	2	Nut M6	
52	4811700	4	Washer M6	
53	1001219601	1	Sensor, Tilt Dual Axis CAN	
54	1001271794	1	Bracket, Tilt Sensor	
55	1001276143	1	Harness, Tilt Sensor	

FIGURE 2-24. GROUND CONTROL BOX ASSEMBLY - WITH DEUTZ D2011 ENGINES - WITH MECHANICAL HOUR METER (ANSI EXPORT LRC AND AUSTRALIAN SPECS)

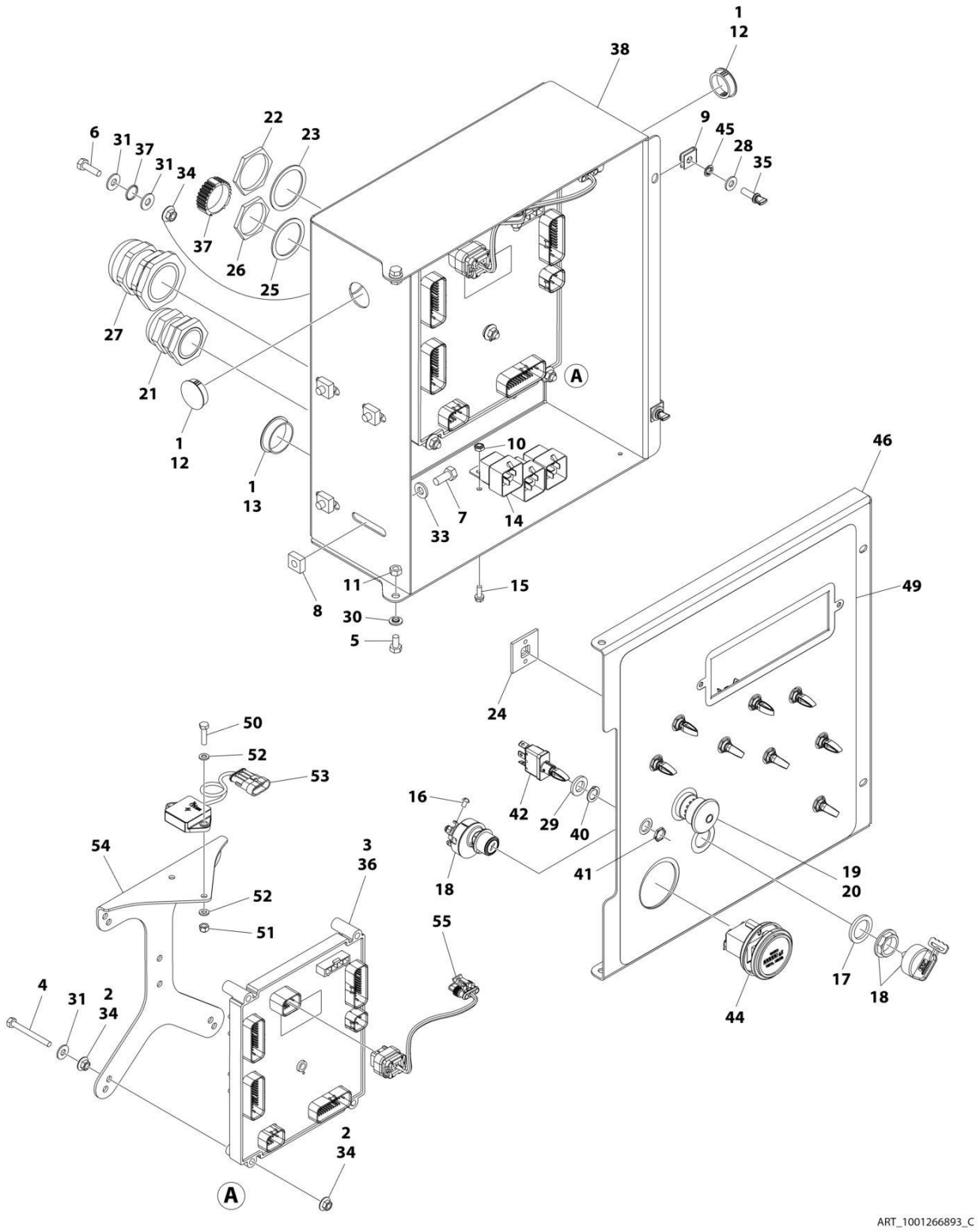

FIGURE 2-24. GROUND CONTROL BOX ASSEMBLY - WITH DEUTZ D2011 ENGINES - WITH MECHANICAL HOUR METER (ANSI EXPORT LRC AND AUSTRALIAN SPECS)

ITEM	PART NUMBER	QTY	DESCRIPTION	REV
	1001266893	Ref	GROUND CONTROL BOX ASSEMBLY	C
1	0100009	AR	Sealant	
2	0100011	AR	Compound, Locking	
3	0100048	AR	Grease, Dielectric	
4	0630548	5	Bolt 2-1/2	
5	0641404	2	Bolt 1/4 x 1/2	
6	0641407	1	Bolt 1/4 x 7/8	
7	0641506	4	Bolt 5/16 x 3/4	
8	3300205	4	Nut, Retainer	
9	3300353	2	Nut, Tinnerman	
10	3300408	3	Nut, Nylon Insert	
11	3311405	2	Nut 1/4	
12	3520031	2	Plug	
13	3520035	1	Plug	
14	3740049	3	Relay	
15	3900268	3	Screw #10x1/2	
16	3910804	6	Screw #8 x 1/4	
17	4070991	1	Shim	
18	4360469	1	Switch, Key	
18	2860030	1 Set	Key Replacement	
19	4360475	1	Switch, Emergency Stop	
19	7020175	1	Cap, Mushroom	
19	7020176	1	Block, Contact	
20	4360476	1	Switch, Contact Block	
21	4460426	1	Connector, Strain Relief	
22	4460470	1	Nut, Terminal	
23	4460471	1	Lockwasher, Terminal	
24	4460488	6	Mounting Base, Terminal	
25	4460496	1	Washer, Terminal	
26	4460497	1	Nut, Terminal	
27	4460526	1	Connector, Strain Relief	
28	4711400	2	Washer 1/4	
29	4740397	9	Spacer	
30	4740518	2	Washer	
31	4751400	7	Washer 1/4	
33	4891500	4	Washer 5/16	
34	77143013	11	Nut 1/4	
35	1001103308	2	Thumbscrew 1/4 x 3/4	
36	1001280600	1	Module, Ground Control (Note: Recalibration Required When Replaced)	
37	1001106736	1	Cap, Dust	
38	1001152175	1	Box	
39	1001153713	1	Engine Harness (Not Shown - See Separate Breakdown in ELECTRICAL Section)	
40	1001155043	9	Washer	
41	1001155044	9	Nut 15/32	
42	1001155045	9	Switch, Toggle	
43	1001170808	1	Control Valve Harness (Not Shown - See Separate Breakdown in ELECTRICAL Section)	

ITEM	PART NUMBER	QTY	DESCRIPTION	REV
44	10836804	1	Hour Meter	
45	1001188874	2	Nut	
46	1001280403	1	Lid	
47	1001266628	1	Ground Control Box Harness (Not Shown - See Separate Breakdown in ELECTRICAL Section)	
49	1001266876	1	Decal - Ground Control Box	
50	0760612	2	Bolt M6 x 25	
51	3290605	2	Nut M6	
52	4811700	4	Washer M6	
53	1001219601	1	Sensor, Tilt Dual Axis CAN	
54	1001271794	1	Bracket, Tilt Sensor	
55	1001276143	1	Harness, Tilt Sensor	

FIGURE 2-25. GROUND CONTROL BOX ASSEMBLY - WITH DEUTZ D2011 AND TOWER STOW - WITH DIGITAL DISPLAY (ANSI EXPORT LRC AND AUSTRALIAN SPECS)

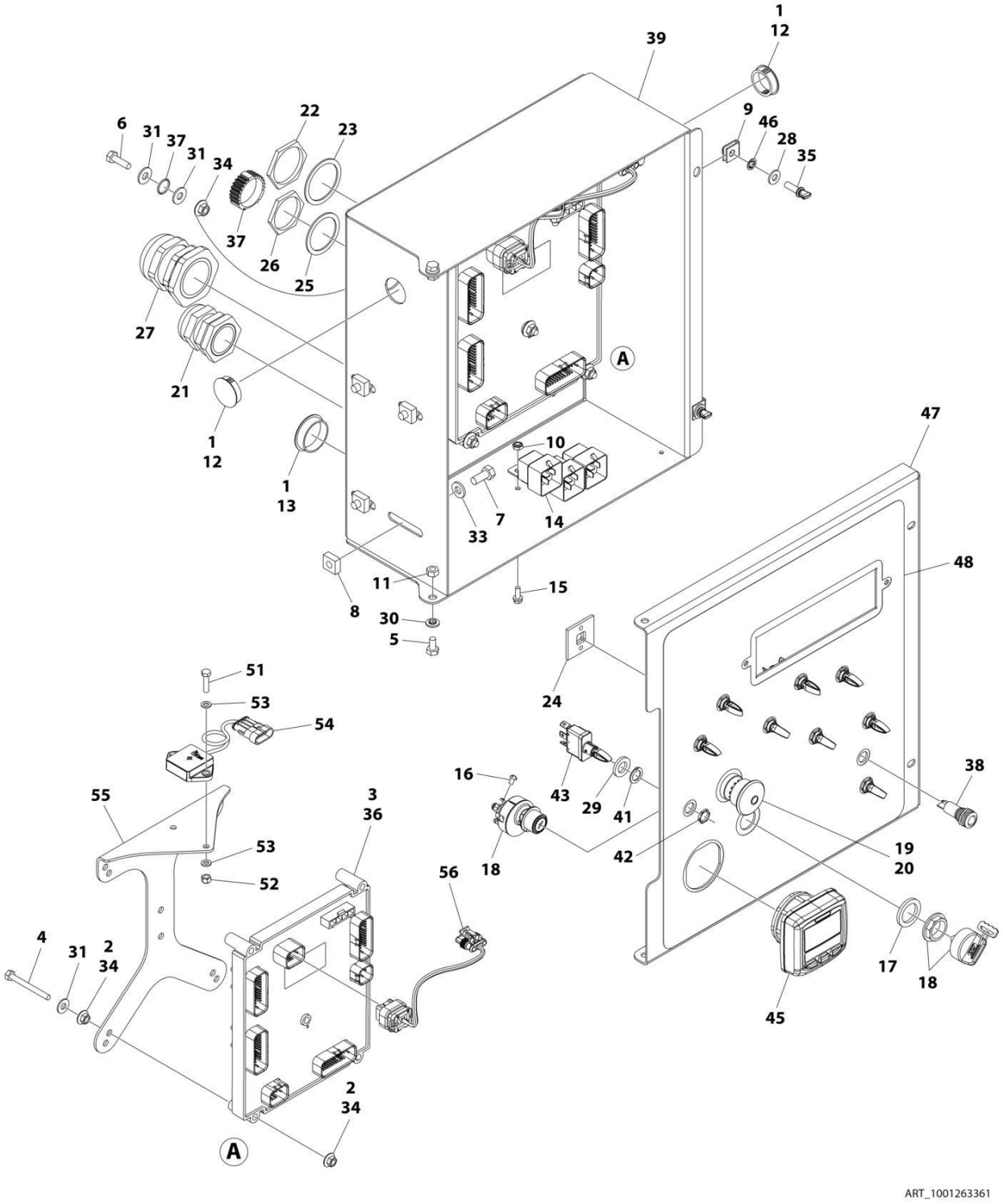

FIGURE 2-25. GROUND CONTROL BOX ASSEMBLY - WITH DEUTZ D2011 AND TOWER STOW - WITH DIGITAL DISPLAY (ANSI EXPORT LRC AND AUSTRALIAN SPECS)

ITEM	PART NUMBER	QTY	DESCRIPTION	REV
	1001263361	Ref	GROUND CONTROL BOX ASSEMBLY	B
1	0100009	AR	Sealant	
2	0100011	AR	Compound, Locking	
3	0100048	AR	Grease, Dielectric	
4	0630548	5	Bolt 2-1/2	
5	0641404	2	Bolt 1/4 x 1/2	
6	0641407	1	Bolt 1/4 x 7/8	
7	0641506	4	Bolt 5/16 x 3/4	
8	3300205	4	Nut, Retainer	
9	3300353	2	Nut, Tinnerman	
10	3300408	3	Nut, Nylon Insert	
11	3311405	2	Nut 1/4	
12	3520031	2	Plug	
13	3520035	1	Plug	
14	3740049	3	Relay	
15	3900268	3	Screw #10x1/2	
16	3910804	6	Screw #8 x 1/4	
17	4070991	1	Shim	
18	4360469	1	Switch, Key	
18	2860030	1 Set	Key Replacement	
19	4360475	1	Switch, Emergency Stop	
19	7020175	1	Cap, Mushroom	
19	7020176	1	Block, Contact	
20	4360476	1	Switch, Contact Block	
21	4460426	1	Connector, Strain Relief	
22	4460470	1	Nut, Terminal	
23	4460471	1	Lockwasher, Terminal	
24	4460488	6	Mounting Base, Terminal	
25	4460496	1	Washer, Terminal	
26	4460497	1	Nut, Terminal	
27	4460526	1	Connector, Strain Relief	
28	4711400	2	Washer 1/4	
29	4740397	9	Spacer	
30	4740518	2	Washer	
31	4751400	7	Washer 1/4	
33	4891500	4	Washer 5/16	
34	77143013	11	Nut 1/4	
35	1001103308	2	Thumbscrew 1/4 x 3/4	
36	1001103667	1	Module, Ground Control (Please Verify Part Number on Module Decal Before Purchasing) (Note: Recalibration Required When Replaced)	
36	1001280600	1	Module, Ground Control (Please Verify Part Number on Module Decal Before Purchasing) (Note: Recalibration Required When Replaced)	
37	1001106736	1	Cap, Dust	
38	1001137364	1	Light, Indicator	
39	1001152175	1	Box	
40	1001153713	1	Engine Harness (Not Shown - See Separate Breakdown in ELECTRICAL Section)	
41	1001155043	9	Washer	

ITEM	PART NUMBER	QTY	DESCRIPTION	REV
42	1001155044	9	Nut 15/32	
43	1001155045	9	Switch, Toggle	
44	1001170808	1	Control Valve Harness (Not Shown - See Separate Breakdown in ELECTRICAL Section)	
45	1001171482	1	Gauge, Display	
46	1001188874	2	Nut	
47	1001263352	1	Lid	
48	1001263356	1	Decal - Ground Control Box	
49	1001266628	1	Ground Control Box Harness (Not Shown - See Separate Breakdown in ELECTRICAL Section)	
51	0760612	2	Bolt M6 x 25	
52	3290605	2	Nut M6	
53	4811700	4	Washer M6	
54	1001219601	1	Sensor, Tilt Dual Axis CAN	
55	1001271794	1	Bracket, Tilt Sensor	
56	1001276143	1	Harness, Tilt Sensor	

FIGURE 2-26. GROUND CONTROL BOX ASSEMBLY - WITH DEUTZ D2011 AND TOWER STOW - WITH MECHANICAL HOUR METER (ANSI EXPORT LRC AND AUSTRALIAN SPECS)

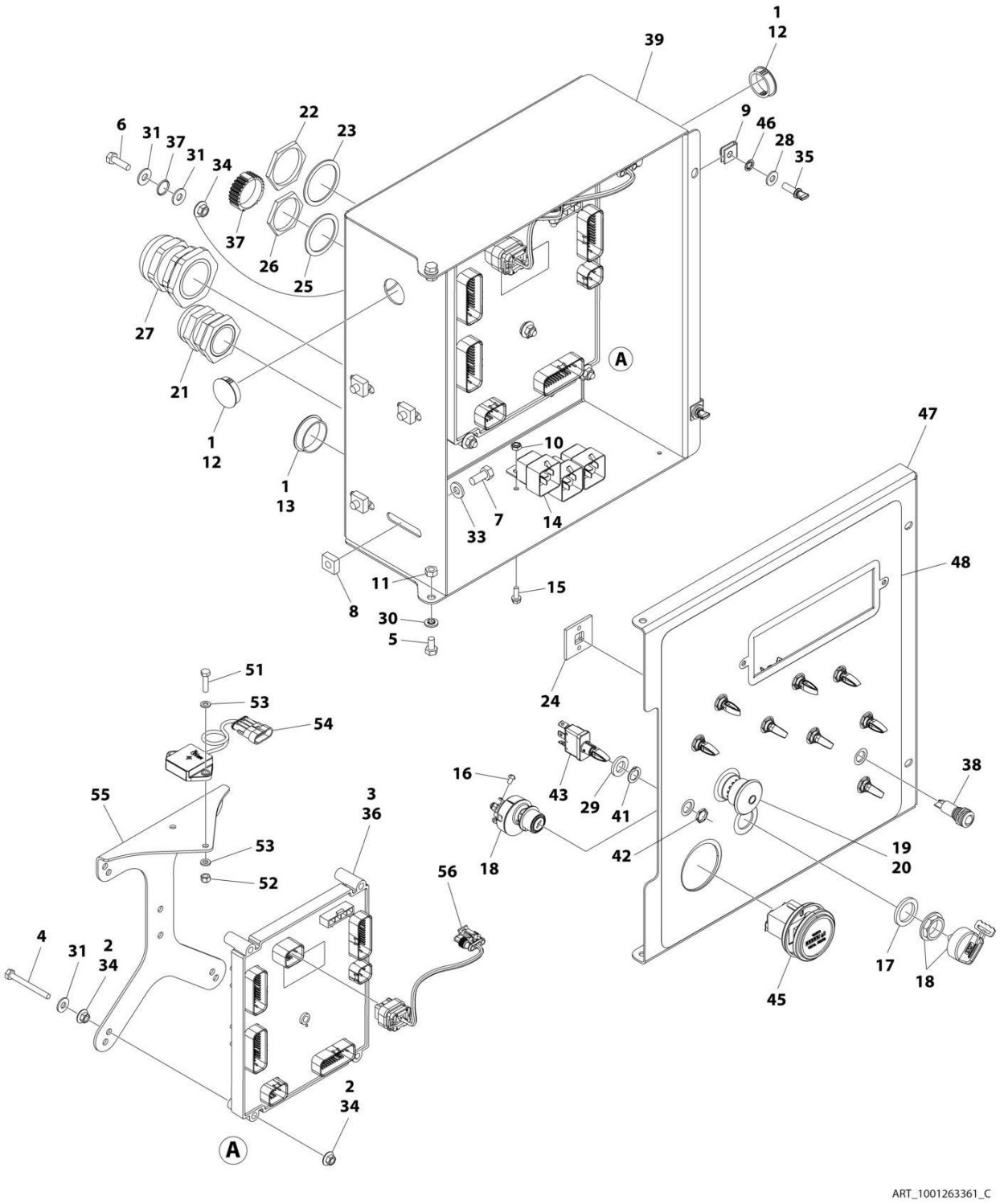

FIGURE 2-26. GROUND CONTROL BOX ASSEMBLY - WITH DEUTZ D2011 AND TOWER STOW - WITH MECHANICAL HOUR METER (ANSI EXPORT LRC AND AUSTRALIAN SPECS)

ITEM	PART NUMBER	QTY	DESCRIPTION	REV
	1001263361	Ref	GROUND CONTROL BOX ASSEMBLY	C
1	0100009	AR	Sealant	
2	0100011	AR	Compound, Locking	
3	0100048	AR	Grease, Dielectric	
4	0630548	5	Bolt 2-1/2	
5	0641404	2	Bolt 1/4 x 1/2	
6	0641407	1	Bolt 1/4 x 7/8	
7	0641506	4	Bolt 5/16 x 3/4	
8	3300205	4	Nut, Retainer	
9	3300353	2	Nut, Tinnerman	
10	3300408	3	Nut, Nylon Insert	
11	3311405	2	Nut 1/4	
12	3520031	2	Plug	
13	3520035	1	Plug	
14	3740049	3	Relay	
15	3900268	3	Screw #10x1/2	
16	3910804	6	Screw #8 x 1/4	
17	4070991	1	Shim	
18	4360469	1	Switch, Key	
18	2860030	1 Set	Key Replacement	
19	4360475	1	Switch, Emergency Stop	
19	7020175	1	Cap, Mushroom	
19	7020176	1	Block, Contact	
20	4360476	1	Switch, Contact Block	
21	4460426	1	Connector, Strain Relief	
22	4460470	1	Nut, Terminal	
23	4460471	1	Lockwasher, Terminal	
24	4460488	6	Mounting Base, Terminal	
25	4460496	1	Washer, Terminal	
26	4460497	1	Nut, Terminal	
27	4460526	1	Connector, Strain Relief	
28	4711400	2	Washer 1/4	
29	4740397	9	Spacer	
30	4740518	2	Washer	
31	4751400	7	Washer 1/4	
33	4891500	4	Washer 5/16	
34	77143013	11	Nut 1/4	
35	1001103308	2	Thumbscrew 1/4 x 3/4	
36	1001280600	1	Module, Ground Control (Note: Recalibration Required When Replaced)	
37	1001106736	1	Cap, Dust	
38	1001137364	1	Light, Indicator	
39	1001152175	1	Box	
40	1001153713	1	Engine Harness (Not Shown - See Separate Breakdown in ELECTRICAL Section)	
41	1001155043	9	Washer	
42	1001155044	9	Nut 15/32	
43	1001155045	9	Switch, Toggle	
44	1001170808	1	Control Valve Harness (Not Shown - See Separate Breakdown in	

ITEM	PART NUMBER	QTY	DESCRIPTION	REV
			ELECTRICAL Section)	
45	10836804	1	Hour Meter	
46	1001188874	2	Nut	
47	1001280403	1	Lid	
48	1001263356	1	Decal - Ground Control Box	
49	1001266628	1	Ground Control Box Harness (Not Shown - See Separate Breakdown in ELECTRICAL Section)	
51	0760612	2	Bolt M6 x 25	
52	3290605	2	Nut M6	
53	4811700	4	Washer M6	
54	1001219601	1	Sensor, Tilt Dual Axis CAN	
55	1001271794	1	Bracket, Tilt Sensor	
56	1001276143	1	Harness, Tilt Sensor	

FIGURE 2-27. GROUND CONTROL BOX ASSEMBLY - WITH DEUTZ D2011 ENGINES (CE & UK CA SPECS)

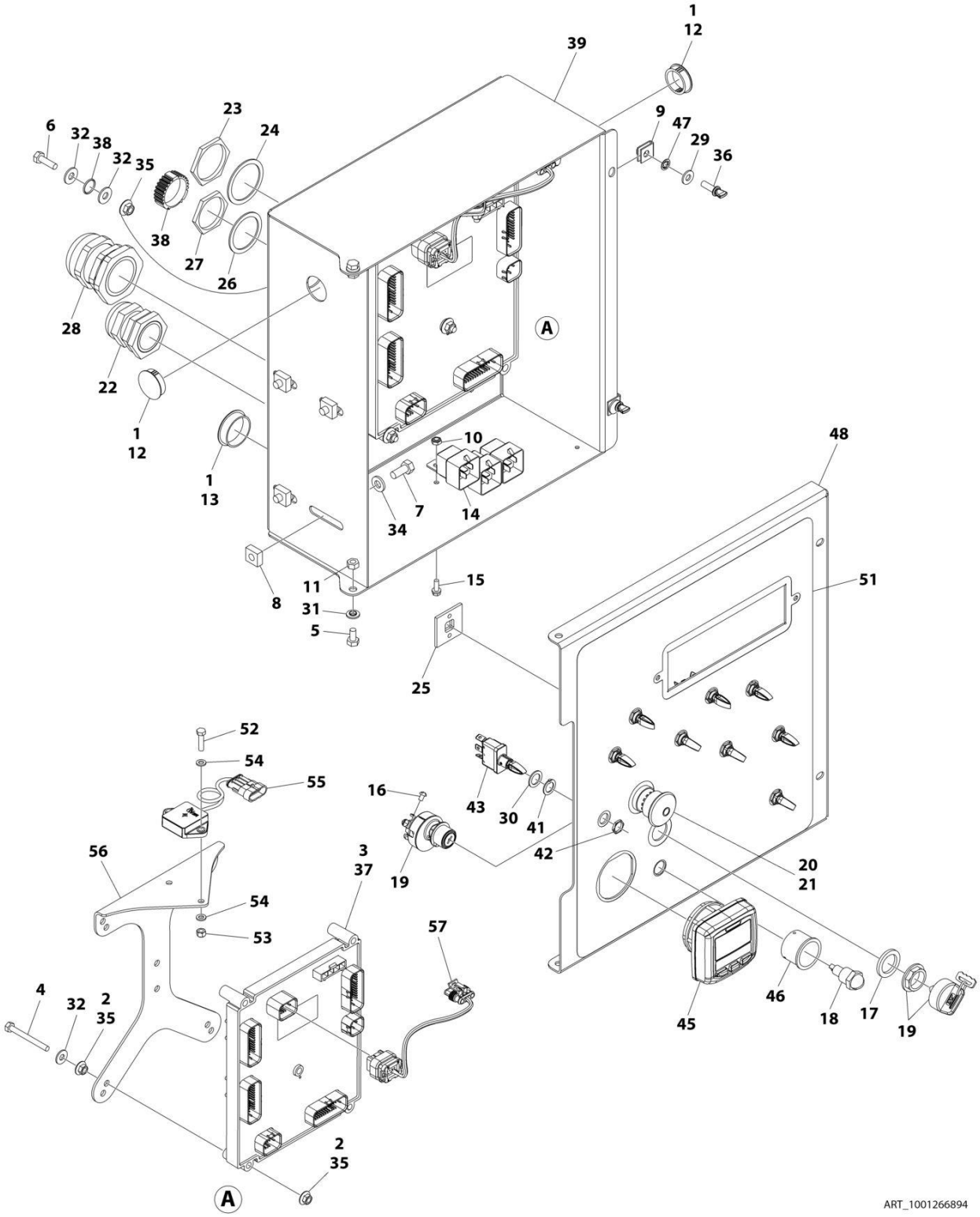

FIGURE 2-27. GROUND CONTROL BOX ASSEMBLY - WITH DEUTZ D2011 ENGINES (CE & UK CA SPECS)

ITEM	PART NUMBER	QTY	DESCRIPTION	REV
	1001266894	Ref	GROUND CONTROL BOX ASSEMBLY	B
1	0100009	AR	Sealant	
2	0100011	AR	Compound, Locking	
3	0100048	AR	Grease, Dielectric	
4	0630548	5	Bolt 2-1/2	
5	0641404	2	Bolt 1/4 x 1/2	
6	0641407	1	Bolt 1/4 x 7/8	
7	0641506	4	Bolt 5/16 x 3/4	
8	3300205	4	Nut, Retainer	
9	3300353	2	Nut, Tinnerman	
10	3300408	3	Nut, Nylon Insert	
11	3311405	2	Nut 1/4	
12	3520031	2	Plug	
13	3520035	1	Plug	
14	3740049	3	Relay	
15	3900268	3	Screw #10x1/2	
16	3910804	6	Screw #8 x 1/4	
17	4070991	1	Shim	
18	4360387	1	Switch, Push Button	
19	4360469	1	Switch, Key	
19	2860030	1 Set	Key Replacement	
20	4360475	1	Switch, Emergency Stop	
20	7020175	1	Cap, Mushroom	
20	7020176	1	Block, Contact	
21	4360476	1	Switch, Contact Block	
22	4460426	1	Connector, Strain Relief	
23	4460470	1	Nut, Terminal	
24	4460471	1	Lockwasher, Terminal	
25	4460488	6	Mounting Base, Terminal	
26	4460496	1	Washer, Terminal	
27	4460497	1	Nut, Terminal	
28	4460526	1	Connector, Strain Relief	
29	4711400	2	Washer 1/4	
30	4740397	9	Spacer	
31	4740518	2	Washer	
32	4751400	7	Washer 1/4	
34	4891500	4	Washer 5/16	
35	77143013	11	Nut 1/4	
36	1001103308	2	Thumbscrew 1/4 x 3/4	
37	1001103667	1	Module, Ground Control (Note: Recalibration Required When Replaced)	
38	1001106736	1	Cap, Dust	
39	1001152175	1	Box	
40	1001153713	1	Engine Harness (Not Shown - See Separate Breakdown in ELECTRICAL Section)	
41	1001155043	9	Washer	
42	1001155044	9	Nut 15/32	
43	1001155045	9	Switch, Toggle	
44	1001170808	1	Control Valve Harness (Not Shown - See Separate Breakdown in	

ITEM	PART NUMBER	QTY	DESCRIPTION	REV
			ELECTRICAL Section)	
45	1001171482	1	Gauge, Display	
46	1001176469	1	Shroud	
47	1001188874	2	Nut	
48	1001263353	1	Lid	
49	1001266628	1	Ground Control Box Harness (Not Shown - See Separate Breakdown in ELECTRICAL Section)	
51	1001266874	1	Decal - Ground Control Box	
52	0760612	2	Bolt M6 x 25	
53	3290605	2	Nut M6	
54	4811700	4	Washer M6	
55	1001219601	1	Sensor, Tilt Dual Axis CAN	
56	1001271794	1	Bracket, Tilt Sensor	
57	1001276143	1	Harness, Tilt Sensor	

FIGURE 2-28. GROUND CONTROL BOX ASSEMBLY - WITH DEUTZ D2011 ENGINES AND WITH TOWER STOW (CE & UK CA LRC SPECS)

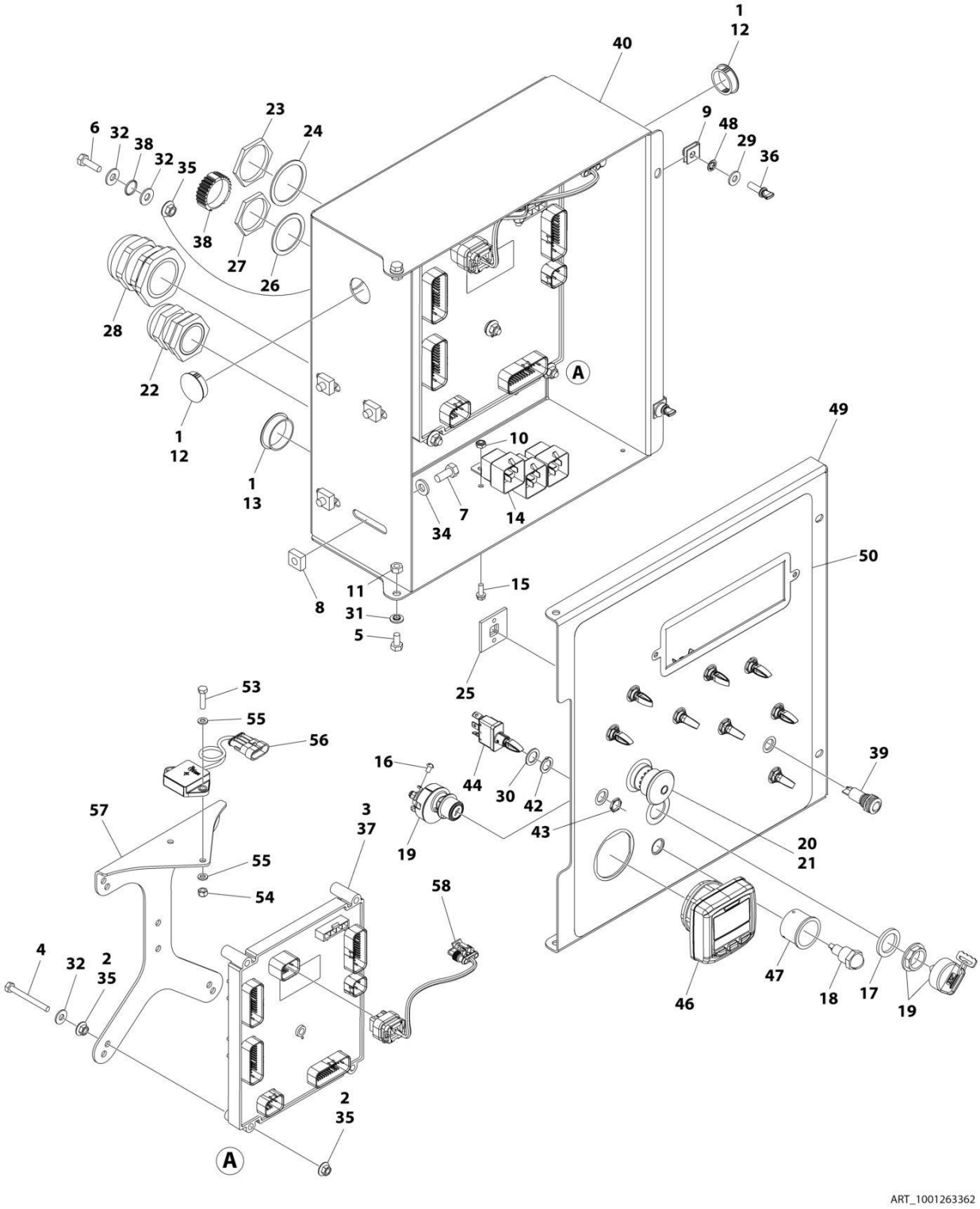

FIGURE 2-28. GROUND CONTROL BOX ASSEMBLY - WITH DEUTZ D2011 ENGINES AND WITH TOWER STOW (CE & UK CA LRC SPECS)

ITEM	PART NUMBER	QTY	DESCRIPTION	REV
	1001263362	Ref	GROUND CONTROL BOX ASSEMBLY	B
1	0100009	AR	Sealant	
2	0100011	AR	Compound, Locking	
3	0100048	AR	Grease, Dielectric	
4	0630548	5	Bolt 2-1/2	
5	0641404	2	Bolt 1/4 x 1/2	
6	0641407	1	Bolt 1/4 x 7/8	
7	0641506	4	Bolt 5/16 x 3/4	
8	3300205	4	Nut, Retainer	
9	3300353	2	Nut, Tinnerman	
10	3300408	3	Nut, Nylon Insert	
11	3311405	2	Nut 1/4	
12	3520031	2	Plug	
13	3520035	1	Plug	
14	3740049	3	Relay	
15	3900268	3	Screw #10x1/2	
16	3910804	6	Screw #8 x 1/4	
17	4070991	1	Shim	
18	4360387	1	Switch, Push Button	
19	4360469	1	Switch, Key	
19	2860030	1 Set	Key Replacement	
20	4360475	1	Switch, Emergency Stop	
20	7020175	1	Cap, Mushroom	
20	7020176	1	Block, Contact	
21	4360476	1	Switch, Contact Block	
22	4460426	1	Connector, Strain Relief	
23	4460470	1	Nut, Terminal	
24	4460471	1	Lockwasher, Terminal	
25	4460488	6	Mounting Base, Terminal	
26	4460496	1	Washer, Terminal	
27	4460497	1	Nut, Terminal	
28	4460526	1	Connector, Strain Relief	
29	4711400	2	Washer 1/4	
30	4740397	9	Spacer	
31	4740518	2	Washer	
32	4751400	7	Washer 1/4	
34	4891500	4	Washer 5/16	
35	77143013	11	Nut 1/4	
36	1001103308	2	Thumbscrew 1/4 x 3/4	
37	1001103667	1	Module, Ground Control (Note: Recalibration Required When Replaced)	
38	1001106736	1	Cap, Dust	
39	1001137364	1	Light, Indicator	
40	1001152175	1	Box	
41	1001153713	1	Engine Harness (Not Shown - See Separate Breakdown in ELECTRICAL Section)	
42	1001155043	9	Washer	
43	1001155044	9	Nut 15/32	
44	1001155045	9	Switch, Toggle	

ITEM	PART NUMBER	QTY	DESCRIPTION	REV
45	1001170808	1	Control Valve Harness (Not Shown - See Separate Breakdown in ELECTRICAL Section)	
46	1001171482	1	Gauge, Display	
47	1001176469	1	Shroud	
48	1001188874	2	Nut	
49	1001263353	1	Lid	
50	1001263355	1	Decal - Ground Control Box	
51	1001266628	1	Ground Control Box Harness (Not Shown - See Separate Breakdown in ELECTRICAL Section)	
53	0760612	2	Bolt M6 x 25	
54	3290605	2	Nut M6	
55	4811700	4	Washer M6	
56	1001219601	1	Sensor, Tilt Dual Axis CAN	
57	1001271794	1	Bracket, Tilt Sensor	
58	1001276143	1	Harness, Tilt Sensor	

FIGURE 2-29. GROUND CONTROL BOX ASSEMBLY - WITH DEUTZ TD2.9L4 ENGINES - WITH DIGITAL DISPLAY (ANSI, ANSI EXPORT, CSA, CHINA & JAPANESE SPECS)

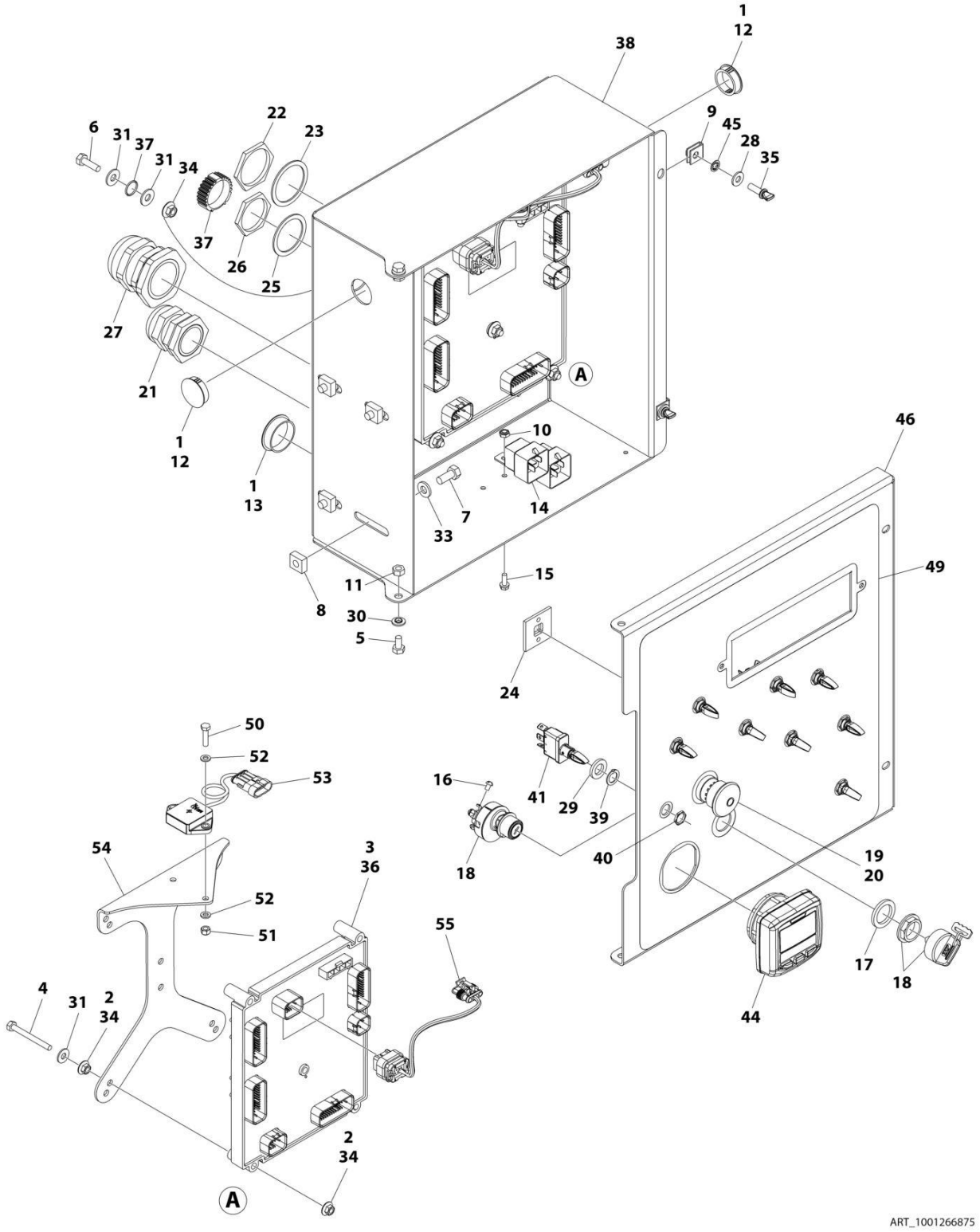

FIGURE 2-29. GROUND CONTROL BOX ASSEMBLY - WITH DEUTZ TD2.9L4 ENGINES - WITH DIGITAL DISPLAY (ANSI, ANSI EXPORT, CSA, CHINA & JAPANESE SPECS)

ITEM	PART NUMBER	QTY	DESCRIPTION	REV
	1001266875	Ref	GROUND CONTROL BOX ASSEMBLY	B
1	0100009	AR	Sealant	
2	0100011	AR	Compound, Locking	
3	0100048	AR	Grease, Dielectric	
4	0630548	5	Bolt 2-1/2	
5	0641404	2	Bolt 1/4 x 1/2	
6	0641407	1	Bolt 1/4 x 7/8	
7	0641506	4	Bolt 5/16 x 3/4	
8	3300205	4	Nut, Retainer	
9	3300353	2	Nut, Tinnerman	
10	3300408	2	Nut, Nylon Insert	
11	3311405	2	Nut 1/4	
12	3520031	2	Plug	
13	3520035	1	Plug	
14	3740049	2	Relay	
15	3900268	2	Screw #10x1/2	
16	3910804	6	Screw #8 x 1/4	
17	4070991	1	Shim	
18	4360469	1	Switch, Key	
18	2860030	1 Set	Key Replacement	
19	4360475	1	Switch, Emergency Stop	
19	7020175	1	Cap, Mushroom	
19	7020176	1	Block, Contact	
20	4360476	1	Switch, Contact Block	
21	4460426	1	Connector, Strain Relief	
22	4460470	1	Nut, Terminal	
23	4460471	1	Lockwasher, Terminal	
24	4460488	6	Mounting Base, Terminal	
25	4460496	1	Washer, Terminal	
26	4460497	1	Nut, Terminal	
27	4460526	1	Connector, Strain Relief	
28	4711400	2	Washer 1/4	
29	4740397	9	Spacer	
30	4740518	2	Washer	
31	4751400	7	Washer 1/4	
33	4891500	4	Washer 5/16	
34	77143013	11	Nut 1/4	
35	1001103308	2	Thumbscrew 1/4 x 3/4	
36	1001103667	1	Module, Ground Control (Please Verify Part Number on Module Decal Before Purchasing) (Note: Recalibration Required When Replaced)	
36	1001280600	1	Module, Ground Control (Please Verify Part Number on Module Decal Before Purchasing) (Note: Recalibration Required When Replaced)	
37	1001106736	1	Cap, Dust	
38	1001152175	1	Box	
39	1001155043	9	Washer	
40	1001155044	9	Nut 15/32	
41	1001155045	9	Switch, Toggle	
42	1001165776	1	Engine Harness (Not Shown - See Separate Breakdown in	

ITEM	PART NUMBER	QTY	DESCRIPTION	REV
			ELECTRICAL Section)	
43	1001170808	1	Control Valve Harness (Not Shown - See Separate Breakdown in ELECTRICAL Section)	
44	1001171482	1	Gauge, Display	
45	1001188874	2	Nut	
46	1001263352	1	Lid	
47	1001266628	1	Ground Control Box Harness (Not Shown - See Separate Breakdown in ELECTRICAL Section)	
49	1001266876	1	Decal - Ground Control Box	
50	0760612	2	Bolt M6 x 25	
51	3290605	2	Nut M6	
52	4811700	4	Washer M6	
53	1001219601	1	Sensor, Tilt Dual Axis CAN	
54	1001271794	1	Bracket, Tilt Sensor	
55	1001276143	1	Harness, Tilt Sensor	

FIGURE 2-30. GROUND CONTROL BOX ASSEMBLY - WITH DEUTZ TD2.9L4 ENGINES - WITH MECHANICAL HOUR METER (ANSI, ANSI EXPORT, CSA, CHINA & JAPANESE SPECS)

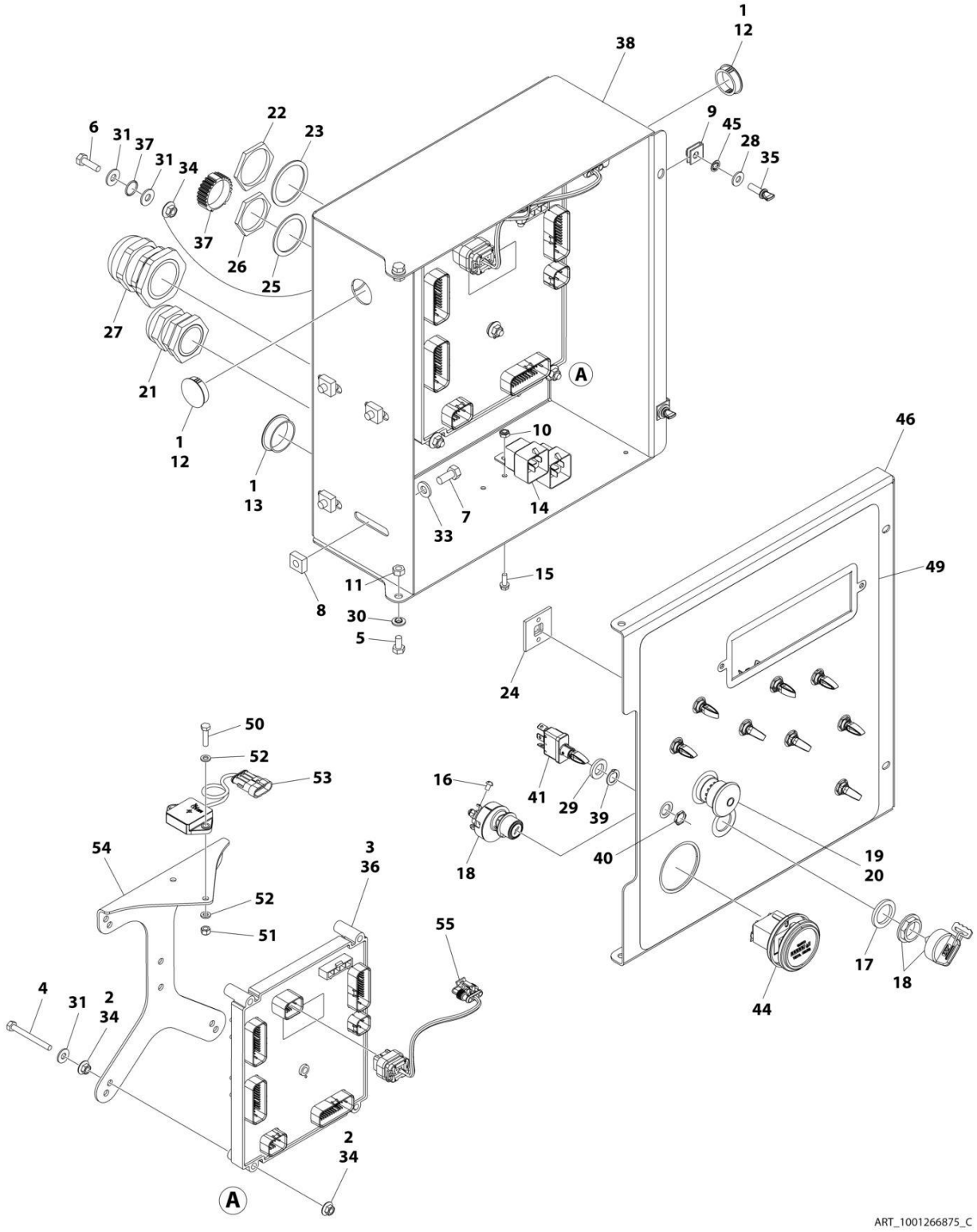

FIGURE 2-30. GROUND CONTROL BOX ASSEMBLY - WITH DEUTZ TD2.9L4 ENGINES - WITH MECHANICAL HOUR METER (ANSI, ANSI EXPORT, CSA, CHINA & JAPANESE SPECS)

ITEM	PART NUMBER	QTY	DESCRIPTION	REV
	1001266875	Ref	GROUND CONTROL BOX ASSEMBLY	C
1	0100009	AR	Sealant	
2	0100011	AR	Compound, Locking	
3	0100048	AR	Grease, Dielectric	
4	0630548	5	Bolt 2-1/2	
5	0641404	2	Bolt 1/4 x 1/2	
6	0641407	1	Bolt 1/4 x 7/8	
7	0641506	4	Bolt 5/16 x 3/4	
8	3300205	4	Nut, Retainer	
9	3300353	2	Nut, Tinnerman	
10	3300408	2	Nut, Nylon Insert	
11	3311405	2	Nut 1/4	
12	3520031	2	Plug	
13	3520035	1	Plug	
14	3740049	2	Relay	
15	3900268	2	Screw #10x1/2	
16	3910804	6	Screw #8 x 1/4	
17	4070991	1	Shim	
18	4360469	1	Switch, Key	
18	2860030	1 Set	Key Replacement	
19	4360475	1	Switch, Emergency Stop	
19	7020175	1	Cap, Mushroom	
19	7020176	1	Block, Contact	
20	4360476	1	Switch, Contact Block	
21	4460426	1	Connector, Strain Relief	
22	4460470	1	Nut, Terminal	
23	4460471	1	Lockwasher, Terminal	
24	4460488	6	Mounting Base, Terminal	
25	4460496	1	Washer, Terminal	
26	4460497	1	Nut, Terminal	
27	4460526	1	Connector, Strain Relief	
28	4711400	2	Washer 1/4	
29	4740397	9	Spacer	
30	4740518	2	Washer	
31	4751400	7	Washer 1/4	
33	4891500	4	Washer 5/16	
34	77143013	11	Nut 1/4	
35	1001103308	2	Thumbscrew 1/4 x 3/4	
36	1001280600	1	Module, Ground Control (Note: Recalibration Required When Replaced)	
37	1001106736	1	Cap, Dust	
38	1001152175	1	Box	
39	1001155043	9	Washer	
40	1001155044	9	Nut 15/32	
41	1001155045	9	Switch, Toggle	
42	1001165776	1	Engine Harness (Not Shown - See Separate Breakdown in ELECTRICAL Section)	
43	1001170808	1	Control Valve Harness (Not Shown - See Separate Breakdown in ELECTRICAL Section)	

ITEM	PART NUMBER	QTY	DESCRIPTION	REV
44	10836804	1	Hour Meter	
45	1001188874	2	Nut	
46	1001280403	1	Lid	
47	1001266628	1	Ground Control Box Harness (Not Shown - See Separate Breakdown in ELECTRICAL Section)	
49	1001266876	1	Decal - Ground Control Box	
50	0760612	2	Bolt M6 x 25	
51	3290605	2	Nut M6	
52	4811700	4	Washer M6	
53	1001219601	1	Sensor, Tilt Dual Axis CAN	
54	1001271794	1	Bracket, Tilt Sensor	
55	1001276143	1	Harness, Tilt Sensor	

FIGURE 2-31. GROUND CONTROL BOX ASSEMBLY - WITH DEUTZ TD2.9L4 AND TOWER STOW - WITH DIGITAL DISPLAY (ANSI, ANSI EXPORT, CSA, CHINA & JAPANESE SPECS)

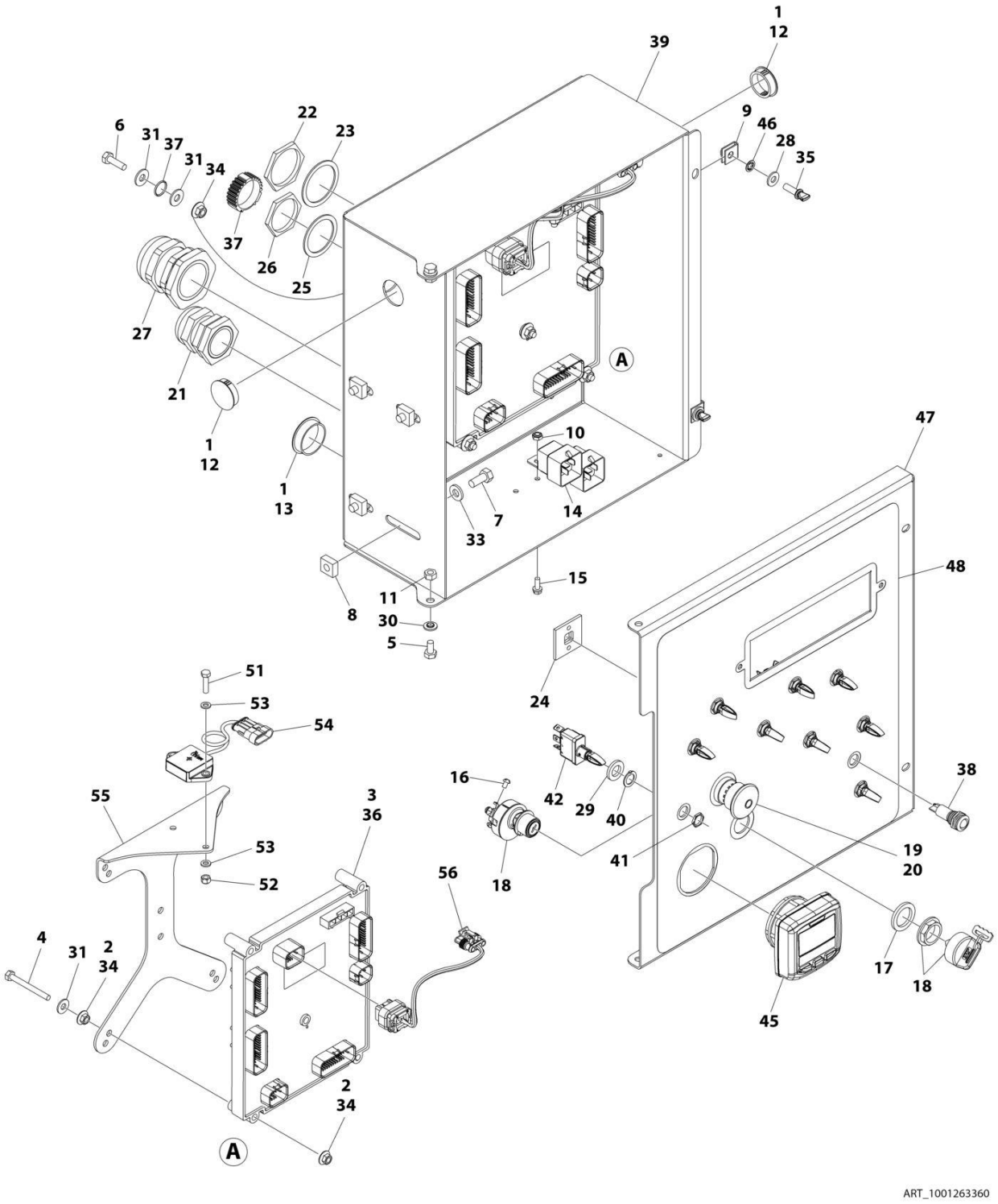

FIGURE 2-31. GROUND CONTROL BOX ASSEMBLY - WITH DEUTZ TD2.9L4 AND TOWER STOW - WITH DIGITAL DISPLAY (ANSI, ANSI EXPORT, CSA, CHINA & JAPANESE SPECS)

ITEM	PART NUMBER	QTY	DESCRIPTION	REV
	1001263360	Ref	GROUND CONTROL BOX ASSEMBLY	B
1	0100009	AR	Sealant	
2	0100011	AR	Compound, Locking	
3	0100048	AR	Grease, Dielectric	
4	0630548	5	Bolt 2-1/2	
5	0641404	2	Bolt 1/4 x 1/2	
6	0641407	1	Bolt 1/4 x 7/8	
7	0641506	4	Bolt 5/16 x 3/4	
8	3300205	4	Nut, Retainer	
9	3300353	2	Nut, Tinnerman	
10	3300408	2	Nut, Nylon Insert	
11	3311405	2	Nut 1/4	
12	3520031	2	Plug	
13	3520035	1	Plug	
14	3740049	2	Relay	
15	3900268	2	Screw #10x1/2	
16	3910804	6	Screw #8 x 1/4	
17	4070991	1	Shim	
18	4360469	1	Switch, Key	
18	2860030	1 Set	Key Replacement	
19	4360475	1	Switch, Emergency Stop	
19	7020175	1	Cap, Mushroom	
19	7020176	1	Block, Contact	
20	4360476	1	Switch, Contact Block	
21	4460426	1	Connector, Strain Relief	
22	4460470	1	Nut, Terminal	
23	4460471	1	Lockwasher, Terminal	
24	4460488	6	Mounting Base, Terminal	
25	4460496	1	Washer, Terminal	
26	4460497	1	Nut, Terminal	
27	4460526	1	Connector, Strain Relief	
28	4711400	2	Washer 1/4	
29	4740397	9	Spacer	
30	4740518	2	Washer	
31	4751400	7	Washer 1/4	
33	4891500	4	Washer 5/16	
34	77143013	11	Nut 1/4	
35	1001103308	2	Thumbscrew 1/4 x 3/4	
36	1001103667	1	Module, Ground Control (Please Verify Part Number on Module Decal Before Purchasing) (Note: Recalibration Required When Replaced)	
36	1001280600	1	Module, Ground Control (Please Verify Part Number on Module Decal Before Purchasing) (Note: Recalibration Required When Replaced)	
37	1001106736	1	Cap, Dust	
38	1001137364	1	Light, Indicator	
39	1001152175	1	Box	
40	1001155043	9	Washer	
41	1001155044	9	Nut 15/32	
42	1001155045	9	Switch, Toggle	

ITEM	PART NUMBER	QTY	DESCRIPTION	REV
43	1001165776	1	Engine Harness (Not Shown - See Separate Breakdown in ELECTRICAL Section)	
44	1001170808	1	Control Valve Harness (Not Shown - See Separate Breakdown in ELECTRICAL Section)	
45	1001171482	1	Gauge, Display	
46	1001188874	2	Nut	
47	1001263352	1	Lid	
48	1001263356	1	Decal - Ground Control Box	
49	1001266628	1	Ground Control Box Harness (Not Shown - See Separate Breakdown in ELECTRICAL Section)	
51	0760612	2	Bolt M6 x 25	
52	3290605	2	Nut M6	
53	4811700	4	Washer M6	
54	1001219601	1	Sensor, Tilt Dual Axis CAN	
55	1001271794	1	Bracket, Tilt Sensor	
56	1001276143	1	Harness, Tilt Sensor	

FIGURE 2-32. GROUND CONTROL BOX ASSEMBLY - WITH DEUTZ TD2.9L4 AND TOWER STOW - WITH MECHANICAL HOUR METER (ANSI, ANSI EXPORT, CSA, CHINA & JAPANESE SPECS)

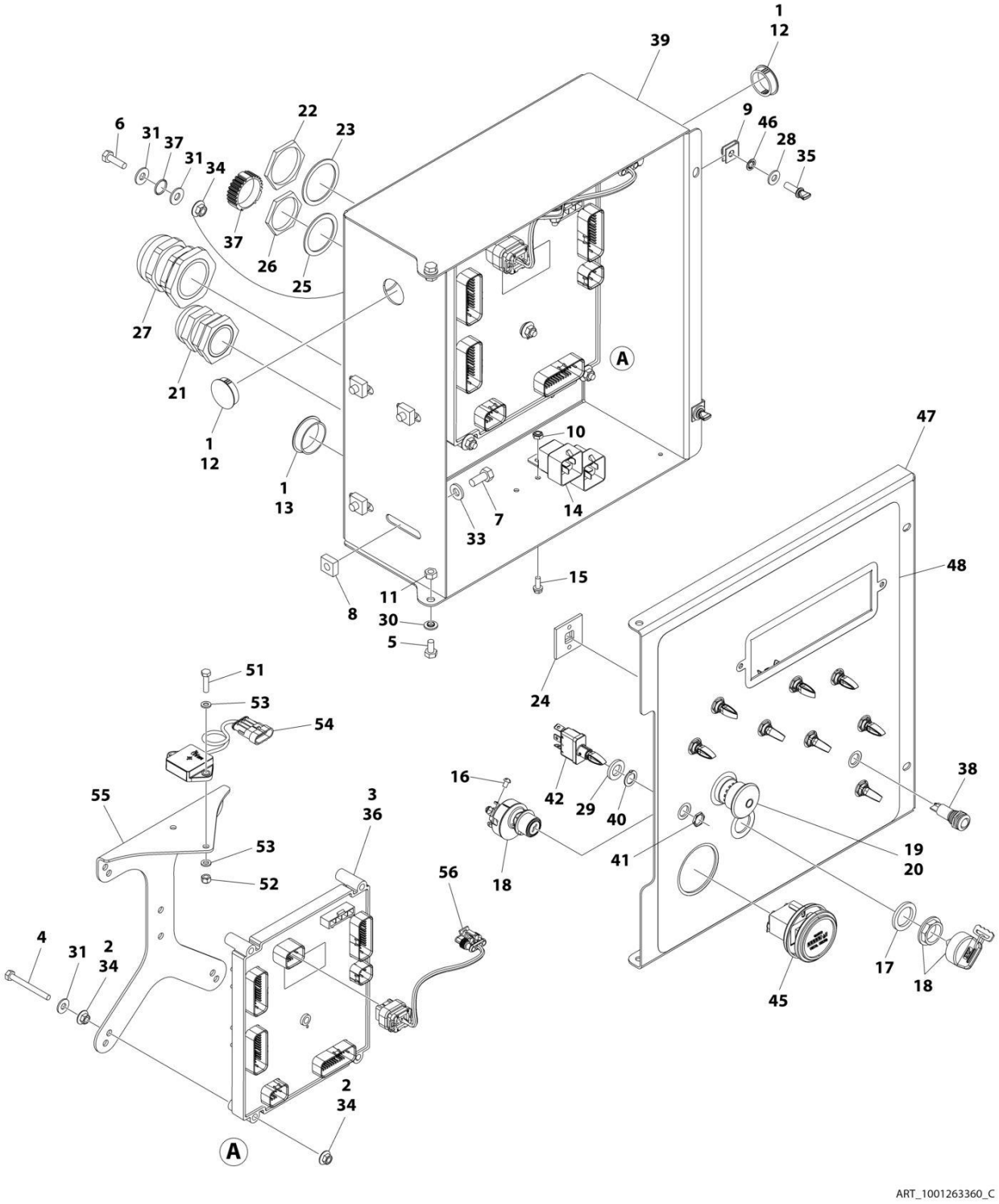

FIGURE 2-32. GROUND CONTROL BOX ASSEMBLY - WITH DEUTZ TD2.9L4 AND TOWER STOW - WITH MECHANICAL HOUR METER (ANSI, ANSI EXPORT, CSA, CHINA & JAPANESE SPECS)

ITEM	PART NUMBER	QTY	DESCRIPTION	REV
	1001263360	Ref	GROUND CONTROL BOX ASSEMBLY	C
1	0100009	AR	Sealant	
2	0100011	AR	Compound, Locking	
3	0100048	AR	Grease, Dielectric	
4	0630548	5	Bolt 2-1/2	
5	0641404	2	Bolt 1/4 x 1/2	
6	0641407	1	Bolt 1/4 x 7/8	
7	0641506	4	Bolt 5/16 x 3/4	
8	3300205	4	Nut, Retainer	
9	3300353	2	Nut, Tinnerman	
10	3300408	2	Nut, Nylon Insert	
11	3311405	2	Nut 1/4	
12	3520031	2	Plug	
13	3520035	1	Plug	
14	3740049	2	Relay	
15	3900268	2	Screw #10x1/2	
16	3910804	6	Screw #8 x 1/4	
17	4070991	1	Shim	
18	4360469	1	Switch, Key	
18	2860030	1 Set	Key Replacement	
19	4360475	1	Switch, Emergency Stop	
19	7020175	1	Cap, Mushroom	
19	7020176	1	Block, Contact	
20	4360476	1	Switch, Contact Block	
21	4460426	1	Connector, Strain Relief	
22	4460470	1	Nut, Terminal	
23	4460471	1	Lockwasher, Terminal	
24	4460488	6	Mounting Base, Terminal	
25	4460496	1	Washer, Terminal	
26	4460497	1	Nut, Terminal	
27	4460526	1	Connector, Strain Relief	
28	4711400	2	Washer 1/4	
29	4740397	9	Spacer	
30	4740518	2	Washer	
31	4751400	7	Washer 1/4	
33	4891500	4	Washer 5/16	
34	77143013	11	Nut 1/4	
35	1001103308	2	Thumbscrew 1/4 x 3/4	
36	1001280600	1	Module, Ground Control (Note: Recalibration Required When Replaced)	
37	1001106736	1	Cap, Dust	
38	1001137364	1	Light, Indicator	
39	1001152175	1	Box	
40	1001155043	9	Washer	
41	1001155044	9	Nut 15/32	
42	1001155045	9	Switch, Toggle	
43	1001165776	1	Engine Harness (Not Shown - See Separate Breakdown in ELECTRICAL Section)	
44	1001170808	1	Control Valve Harness (Not Shown - See Separate Breakdown in	

ITEM	PART NUMBER	QTY	DESCRIPTION	REV
			ELECTRICAL Section)	
45	10836804	1	Hour Meter	
46	1001188874	2	Nut	
47	1001280403	1	Lid	
48	1001263356	1	Decal - Ground Control Box	
49	1001266628	1	Ground Control Box Harness (Not Shown - See Separate Breakdown in ELECTRICAL Section)	
51	0760612	2	Bolt M6 x 25	
52	3290605	2	Nut M6	
53	4811700	4	Washer M6	
54	1001219601	1	Sensor, Tilt Dual Axis CAN	
55	1001271794	1	Bracket, Tilt Sensor	
56	1001276143	1	Harness, Tilt Sensor	

FIGURE 2-33. GROUND CONTROL BOX ASSEMBLY - WITH DEUTZ TD2.9L4 (STAGE V) ENGINES (CE & UK CA SPECS)

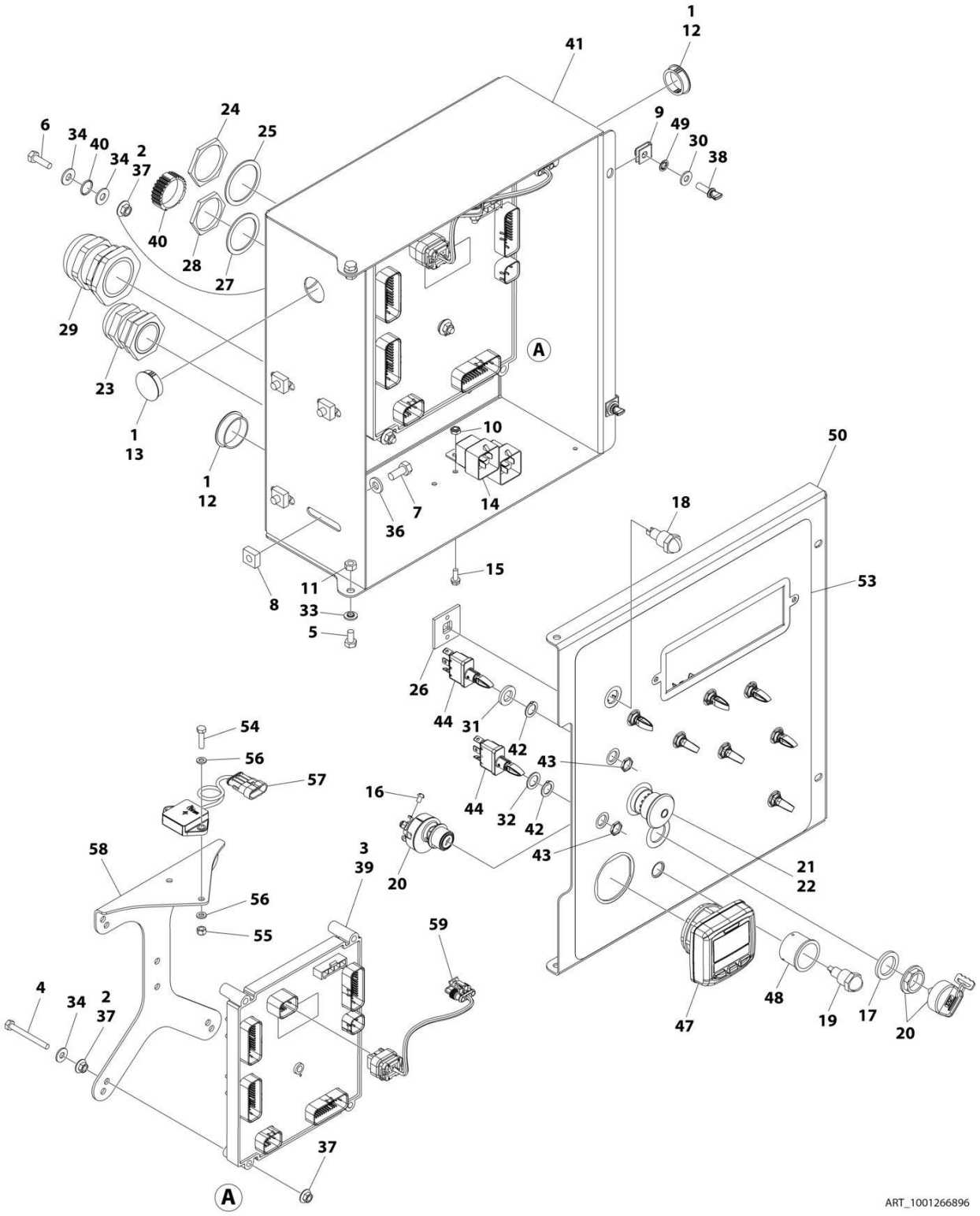

FIGURE 2-33. GROUND CONTROL BOX ASSEMBLY - WITH DEUTZ TD2.9L4 (STAGE V) ENGINES (CE & UK CA SPECS)

ITEM	PART NUMBER	QTY	DESCRIPTION	REV
	1001266896	Ref	GROUND CONTROL BOX ASSEMBLY	B
1	0100009	AR	Sealant	
2	0100011	AR	Compound, Locking	
3	0100048	AR	Grease, Dielectric	
4	0630548	5	Bolt 2-1/2	
5	0641404	2	Bolt 1/4 x 1/2	
6	0641407	1	Bolt 1/4 x 7/8	
7	0641506	4	Bolt 5/16 x 3/4	
8	3300205	4	Nut, Retainer	
9	3300353	2	Nut, Tinnerman	
10	3300408	2	Nut, Nylon Insert	
11	3311405	2	Nut 1/4	
12	3520031	2	Plug	
13	3520035	1	Plug	
14	3740049	2	Relay	
15	3900268	2	Screw #10x1/2	
16	3910804	6	Screw #8 x 1/4	
17	4070991	1	Shim	
18	4360274	1	Switch, Push Button	
19	4360387	1	Switch, Push Button	
20	4360469	1	Switch, Key	
20	2860030	1 Set	Key Replacement	
21	4360475	1	Switch, Emergency Stop	
21	7020175	1	Cap, Mushroom	
21	7020176	1	Block, Contact	
22	4360476	1	Switch, Contact Block	
23	4460426	1	Connector, Strain Relief	
24	4460470	1	Nut, Terminal	
25	4460471	1	Lockwasher, Terminal	
26	4460488	6	Mounting Base, Terminal	
27	4460496	1	Washer, Terminal	
28	4460497	1	Nut, Terminal	
29	4460526	1	Connector, Strain Relief	
30	4711400	2	Washer 1/4	
31	4740397	8	Spacer	
32	4740444	1	Washer	
33	4740518	2	Washer	
34	4751400	7	Washer 1/4	
36	4891500	4	Washer 5/16	
37	77143013	11	Nut 1/4	
38	1001103308	2	Thumbscrew 1/4 x 3/4	
39	1001103667	1	Module, Ground Control (Note: Recalibration Required When Replaced)	
40	1001106736	1	Cap, Dust	
41	1001152175	1	Box	
42	1001155043	9	Washer	
43	1001155044	9	Nut 15/32	
44	1001155045	9	Switch, Toggle	
45	1001165776	1	Engine Harness (Not Shown - See Separate Breakdown in	

ITEM	PART NUMBER	QTY	DESCRIPTION	REV
			ELECTRICAL Section)	
46	1001170808	1	Control Valve Harness (Not Shown - See Separate Breakdown in ELECTRICAL Section)	
47	1001171482	1	Gauge, Display	
48	1001176469	1	Shroud	
49	1001188874	2	Nut	
50	1001263353	1	Lid	
51	1001266628	1	Ground Control Box Harness (Not Shown - See Separate Breakdown in ELECTRICAL Section)	
53	1001266878	1	Decal - Ground Control Box	
54	0760612	2	Bolt M6 x 25	
55	3290605	2	Nut M6	
56	4811700	4	Washer M6	
57	1001219601	1	Sensor, Tilt Dual Axis CAN	
58	1001271794	1	Bracket, Tilt Sensor	
59	1001276143	1	Harness, Tilt Sensor	

FIGURE 2-34. GROUND CONTROL BOX ASSEMBLY - WITH DEUTZ TD2.9L4 (STAGE V) ENGINES AND WITH TOWER STOW (CE & UK CA SPECS)

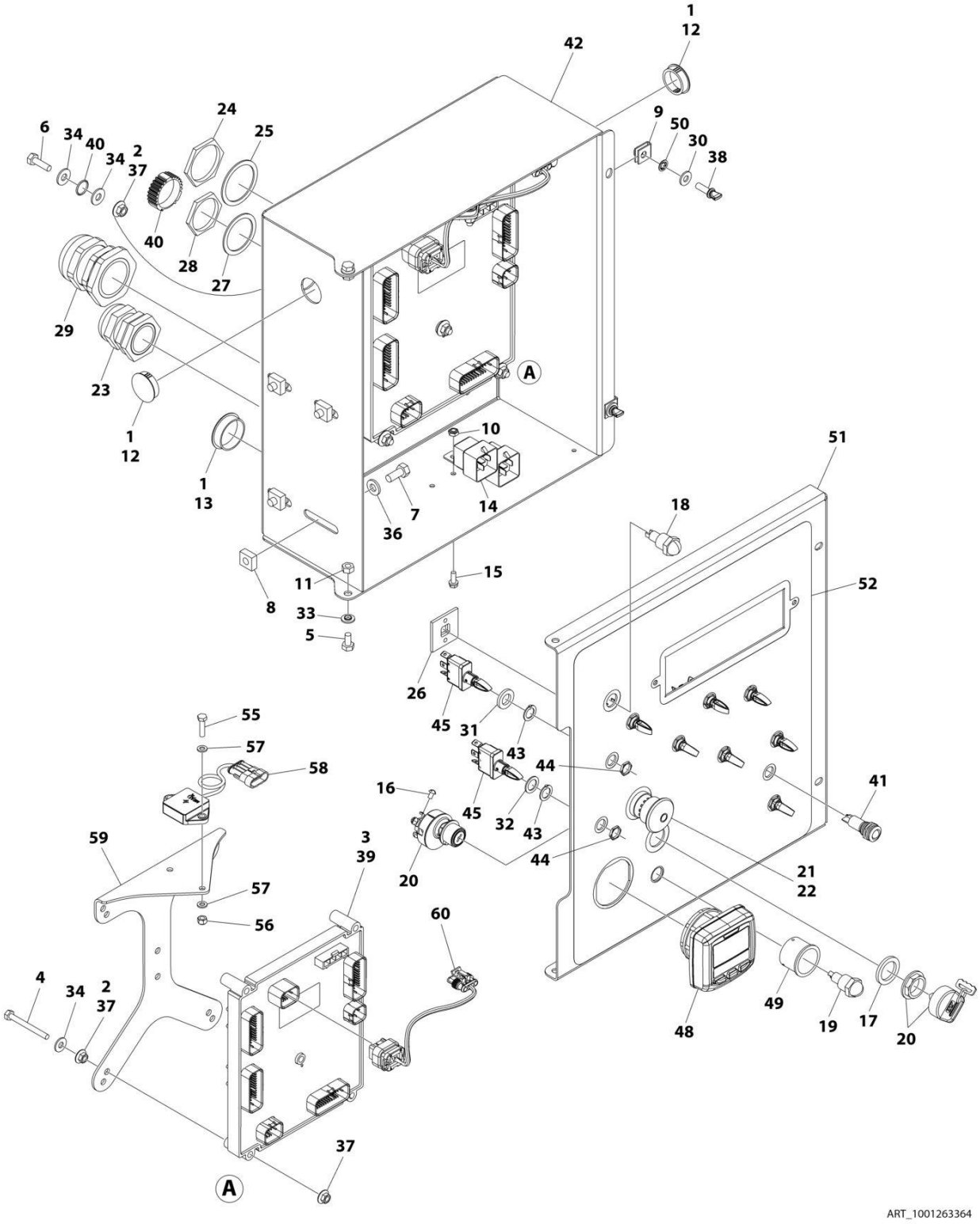

FIGURE 2-34. GROUND CONTROL BOX ASSEMBLY - WITH DEUTZ TD2.9L4 (STAGE V) ENGINES AND WITH TOWER STOW (CE & UK CA SPECS)

ITEM	PART NUMBER	QTY	DESCRIPTION	REV
	1001263364	Ref	GROUND CONTROL BOX ASSEMBLY	B
1	0100009	AR	Sealant	
2	0100011	AR	Compound, Locking	
3	0100048	AR	Grease, Dielectric	
4	0630548	5	Bolt 2-1/2	
5	0641404	2	Bolt 1/4 x 1/2	
6	0641407	1	Bolt 1/4 x 7/8	
7	0641506	4	Bolt 5/16 x 3/4	
8	3300205	4	Nut, Retainer	
9	3300353	2	Nut, Tinnerman	
10	3300408	2	Nut, Nylon Insert	
11	3311405	2	Nut 1/4	
12	3520031	2	Plug	
13	3520035	1	Plug	
14	3740049	2	Relay	
15	3900268	2	Screw #10x1/2	
16	3910804	6	Screw #8 x 1/4	
17	4070991	1	Shim	
18	4360274	1	Switch, Push Button	
19	4360387	1	Switch, Push Button	
20	4360469	1	Switch, Key	
20	2860030	1 Set	Key Replacement	
21	4360475	1	Switch, Emergency Stop	
21	7020175	1	Cap, Mushroom	
21	7020176	1	Block, Contact	
22	4360476	1	Switch, Contact Block	
23	4460426	1	Connector, Strain Relief	
24	4460470	1	Nut, Terminal	
25	4460471	1	Lockwasher, Terminal	
26	4460488	6	Mounting Base, Terminal	
27	4460496	1	Washer, Terminal	
28	4460497	1	Nut, Terminal	
29	4460526	1	Connector, Strain Relief	
30	4711400	2	Washer 1/4	
31	4740397	8	Spacer	
32	4740444	1	Washer	
33	4740518	2	Washer	
34	4751400	7	Washer 1/4	
36	4891500	4	Washer 5/16	
37	77143013	11	Nut 1/4	
38	1001103308	2	Thumbscrew 1/4 x 3/4	
39	1001103667	1	Module, Ground Control (Note: Recalibration Required When Replaced)	
40	1001106736	1	Cap, Dust	
41	1001137364	1	Light, Indicator	
42	1001152175	1	Box	
43	1001155043	9	Washer	
44	1001155044	9	Nut 15/32	
45	1001155045	9	Switch, Toggle	

ITEM	PART NUMBER	QTY	DESCRIPTION	REV
46	1001165776	1	Engine Harness (Not Shown - See Separate Breakdown in ELECTRICAL Section)	
47	1001170808	1	Control Valve Harness (Not Shown - See Separate Breakdown in ELECTRICAL Section)	
48	1001171482	1	Gauge, Display	
49	1001176469	1	Shroud	
50	1001188874	2	Nut	
51	1001263353	1	Lid	
52	1001263357	1	Decal - Ground Control Box	
53	1001266628	1	Ground Control Box Harness (Not Shown - See Separate Breakdown in ELECTRICAL Section)	
55	0760612	2	Bolt M6 x 25	
56	3290605	2	Nut M6	
57	4811700	4	Washer M6	
58	1001219601	1	Sensor, Tilt Dual Axis CAN	
59	1001271794	1	Bracket, Tilt Sensor	
60	1001276143	1	Harness, Tilt Sensor	

FIGURE 2-35. GROUND CONTROL BOX ASSEMBLY - WITH FORD ENGINES - WITH DIGITAL DISPLAY

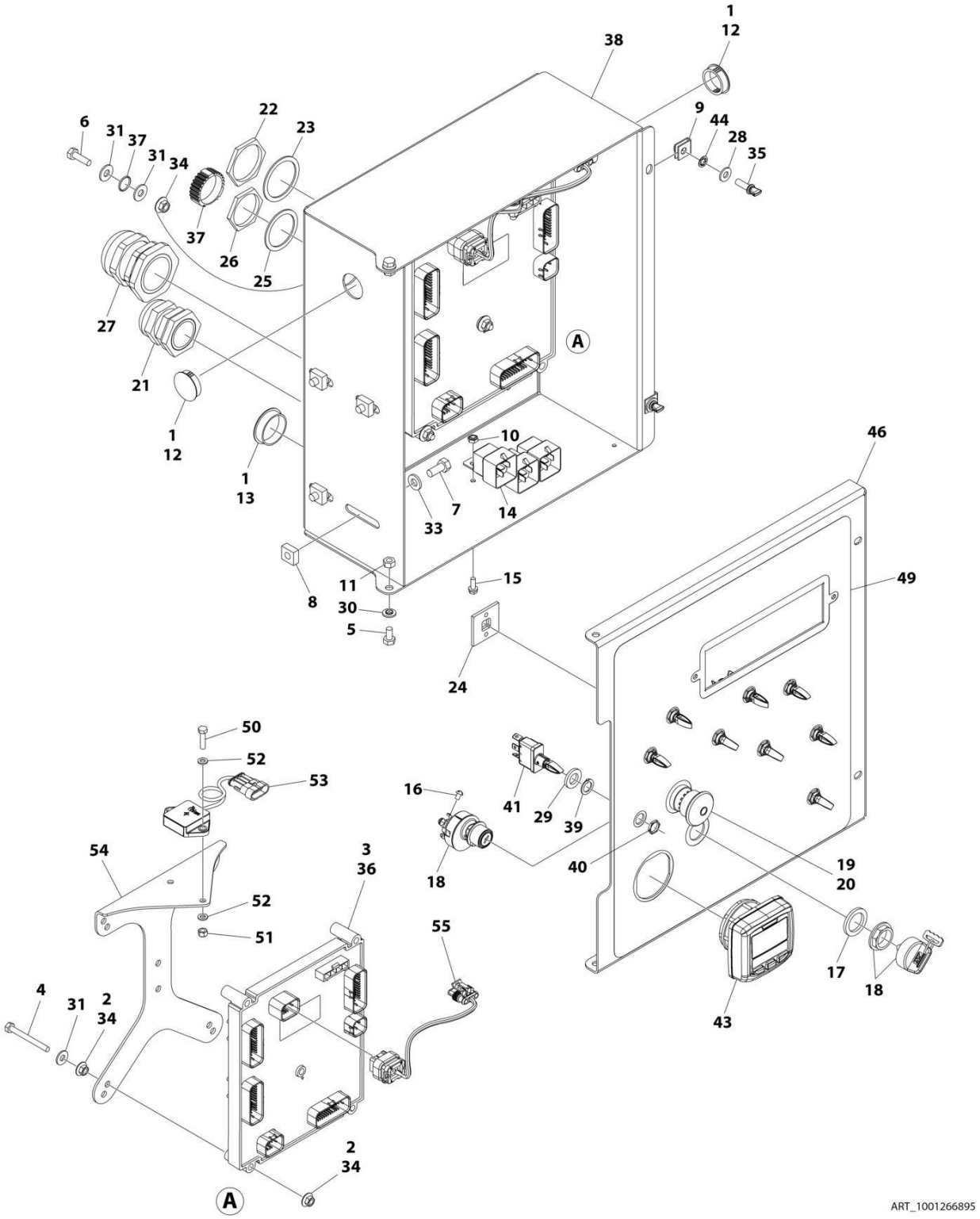

FIGURE 2-35. GROUND CONTROL BOX ASSEMBLY - WITH FORD ENGINES - WITH DIGITAL DISPLAY

ITEM	PART NUMBER	QTY	DESCRIPTION	REV
	1001266895	Ref	GROUND CONTROL BOX ASSEMBLY	B
1	0100009	AR	Sealant	
2	0100011	AR	Compound, Locking	
3	0100048	AR	Grease, Dielectric	
4	0630548	5	Bolt 2-1/2	
5	0641404	2	Bolt 1/4 x 1/2	
6	0641407	1	Bolt 1/4 x 7/8	
7	0641506	4	Bolt 5/16 x 3/4	
8	3300205	4	Nut, Retainer	
9	3300353	2	Nut, Tinnerman	
10	3300408	3	Nut, Nylon Insert	
11	3311405	2	Nut 1/4	
12	3520031	2	Plug	
13	3520035	1	Plug	
14	3740049	3	Relay	
15	3900268	3	Screw #10x1/2	
16	3910804	6	Screw #8 x 1/4	
17	4070991	1	Shim	
18	4360469	1	Switch, Key	
18	2860030	1 Set	Key Replacement	
19	4360475	1	Switch, Emergency Stop	
19	7020175	1	Cap, Mushroom	
19	7020176	1	Block, Contact	
20	4360476	1	Switch, Contact Block	
21	4460426	1	Connector, Strain Relief	
22	4460470	1	Nut, Terminal	
23	4460471	1	Lockwasher, Terminal	
24	4460488	6	Mounting Base, Terminal	
25	4460496	1	Washer, Terminal	
26	4460497	1	Nut, Terminal	
27	4460526	1	Connector, Strain Relief	
28	4711400	2	Washer 1/4	
29	4740397	9	Spacer	
30	4740518	2	Washer	
31	4751400	7	Washer 1/4	
33	4891500	4	Washer 5/16	
34	77143013	11	Nut 1/4	
35	1001103308	2	Thumbscrew 1/4 x 3/4	
36	1001103667	1	Module, Ground Control (Please Verify Part Number on Module Decal Before Purchasing) (Note: Recalibration Required When Replaced)	
36	1001280600	1	Module, Ground Control (Please Verify Part Number on Module Decal Before Purchasing) (Note: Recalibration Required When Replaced)	
37	1001106736	1	Cap, Dust	
38	1001152175	1	Box	
39	1001155043	9	Washer	
40	1001155044	9	Nut 15/32	
41	1001155045	9	Switch, Toggle	
42	1001170808	1	Control Valve Harness (Not Shown - See Separate Breakdown in	

ITEM	PART NUMBER	QTY	DESCRIPTION	REV
			ELECTRICAL Section)	
43	1001171482	1	Gauge, Display	
44	1001188874	2	Nut	
45	1001216230	1	Engine Harness (Not Shown - See Separate Breakdown in ELECTRICAL Section)	
46	1001263352	1	Lid	
47	1001266628	1	Ground Control Box Harness (Not Shown - See Separate Breakdown in ELECTRICAL Section)	
49	1001266876	1	Decal - Ground Control Box	
50	0760612	2	Bolt M6 x 25	
51	3290605	2	Nut M6	
52	4811700	4	Washer M6	
53	1001219601	1	Sensor, Tilt Dual Axis CAN	
54	1001271794	1	Bracket, Tilt Sensor	
55	1001276143	1	Harness, Tilt Sensor	

FIGURE 2-36. GROUND CONTROL BOX ASSEMBLY - WITH FORD ENGINES - WITH MECHANICAL HOUR METER

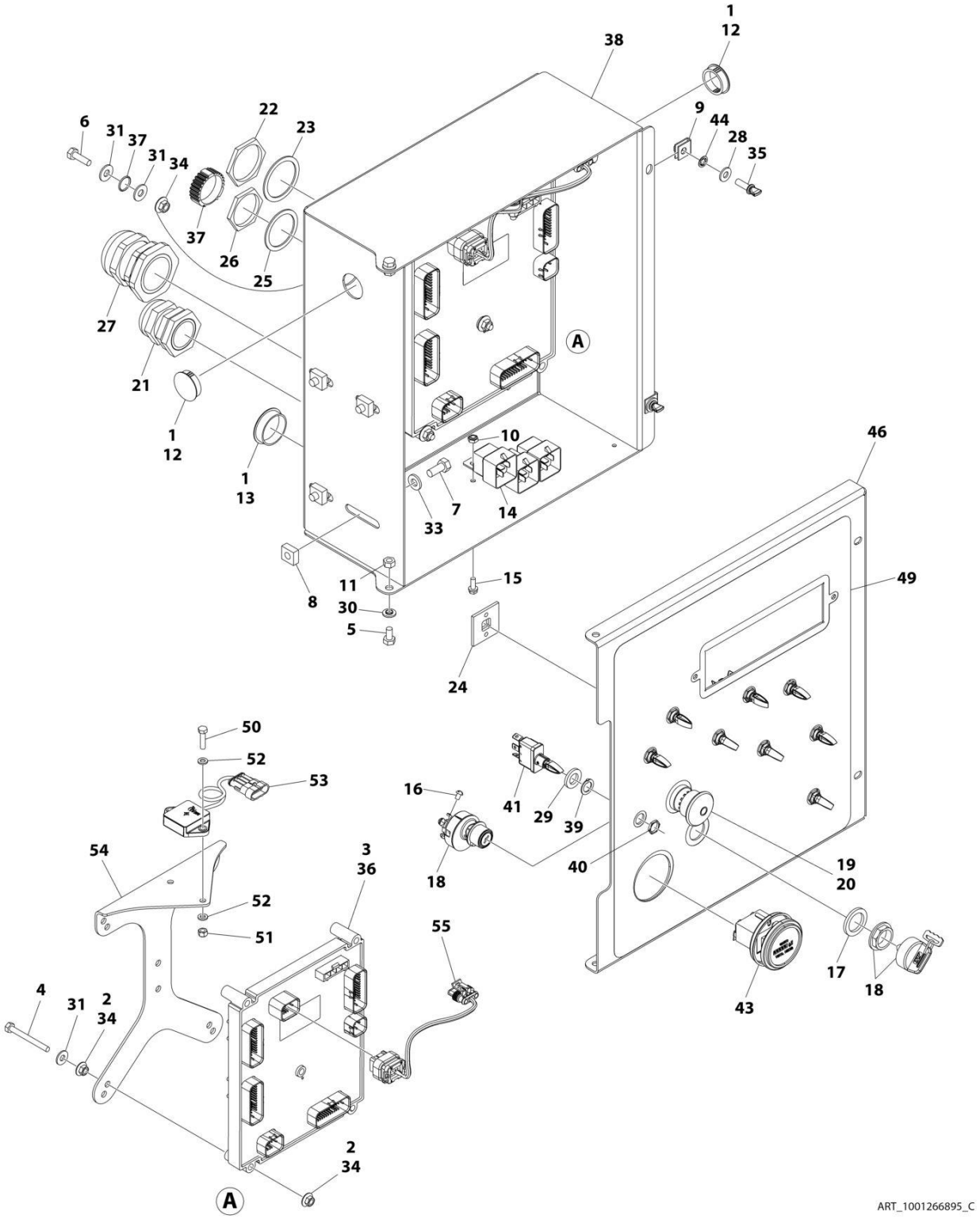

FIGURE 2-36. GROUND CONTROL BOX ASSEMBLY - WITH FORD ENGINES - WITH MECHANICAL HOUR METER

ITEM	PART NUMBER	QTY	DESCRIPTION	REV
	1001266895	Ref	GROUND CONTROL BOX ASSEMBLY	C
1	0100009	AR	Sealant	
2	0100011	AR	Compound, Locking	
3	0100048	AR	Grease, Dielectric	
4	0630548	5	Bolt 2-1/2	
5	0641404	2	Bolt 1/4 x 1/2	
6	0641407	1	Bolt 1/4 x 7/8	
7	0641506	4	Bolt 5/16 x 3/4	
8	3300205	4	Nut, Retainer	
9	3300353	2	Nut, Tinnerman	
10	3300408	3	Nut, Nylon Insert	
11	3311405	2	Nut 1/4	
12	3520031	2	Plug	
13	3520035	1	Plug	
14	3740049	3	Relay	
15	3900268	3	Screw #10 x 1/2	
16	3910804	6	Screw #8 x 1/4	
17	4070991	1	Shim	
18	4360469	1	Switch, Key	
18	2860030	1 Set	Key Replacement	
19	4360475	1	Switch, Emergency Stop	
19	7020175	1	Cap, Mushroom	
19	7020176	1	Block, Contact	
20	4360476	1	Switch, Contact Block	
21	4460426	1	Connector, Strain Relief	
22	4460470	1	Nut, Terminal	
23	4460471	1	Lockwasher, Terminal	
24	4460488	6	Mounting Base, Terminal	
25	4460496	1	Washer, Terminal	
26	4460497	1	Nut, Terminal	
27	4460526	1	Connector, Strain Relief	
28	4711400	2	Washer 1/4	
29	4740397	9	Spacer	
30	4740518	2	Washer	
31	4751400	7	Washer 1/4	
33	4891500	4	Washer 5/16	
34	77143013	11	Nut 1/4	
35	1001103308	2	Thumbscrew 1/4 x 3/4	
36	1001280600	1	Module, Ground Control (Note: Recalibration Required When Replaced)	
37	1001106736	1	Cap, Dust	
38	1001152175	1	Box	
39	1001155043	9	Washer	
40	1001155044	9	Nut 15/32	
41	1001155045	9	Switch, Toggle	
42	1001170808	1	Control Valve Harness (Not Shown - See Separate Breakdown in ELECTRICAL Section)	
43	10836804	1	Hour Meter	
44	1001188874	2	Nut	

ITEM	PART NUMBER	QTY	DESCRIPTION	REV
45	1001216230	1	Engine Harness (Not Shown - See Separate Breakdown in ELECTRICAL Section)	
46	1001280403	1	Lid	
47	1001266628	1	Ground Control Box Harness (Not Shown - See Separate Breakdown in ELECTRICAL Section)	
49	1001266876	1	Decal - Ground Control Box	
50	0760612	2	Bolt M6 x 25	
51	3290605	2	Nut M6	
52	4811700	4	Washer M6	
53	1001219601	1	Sensor, Tilt Dual Axis CAN	
54	1001271794	1	Bracket, Tilt Sensor	
55	1001276143	1	Harness, Tilt Sensor	

FIGURE 2-37. GROUND CONTROL BOX ASSEMBLY - WITH FORD ENGINES AND TOWER STOW - WITH DIGITAL DISPLAY

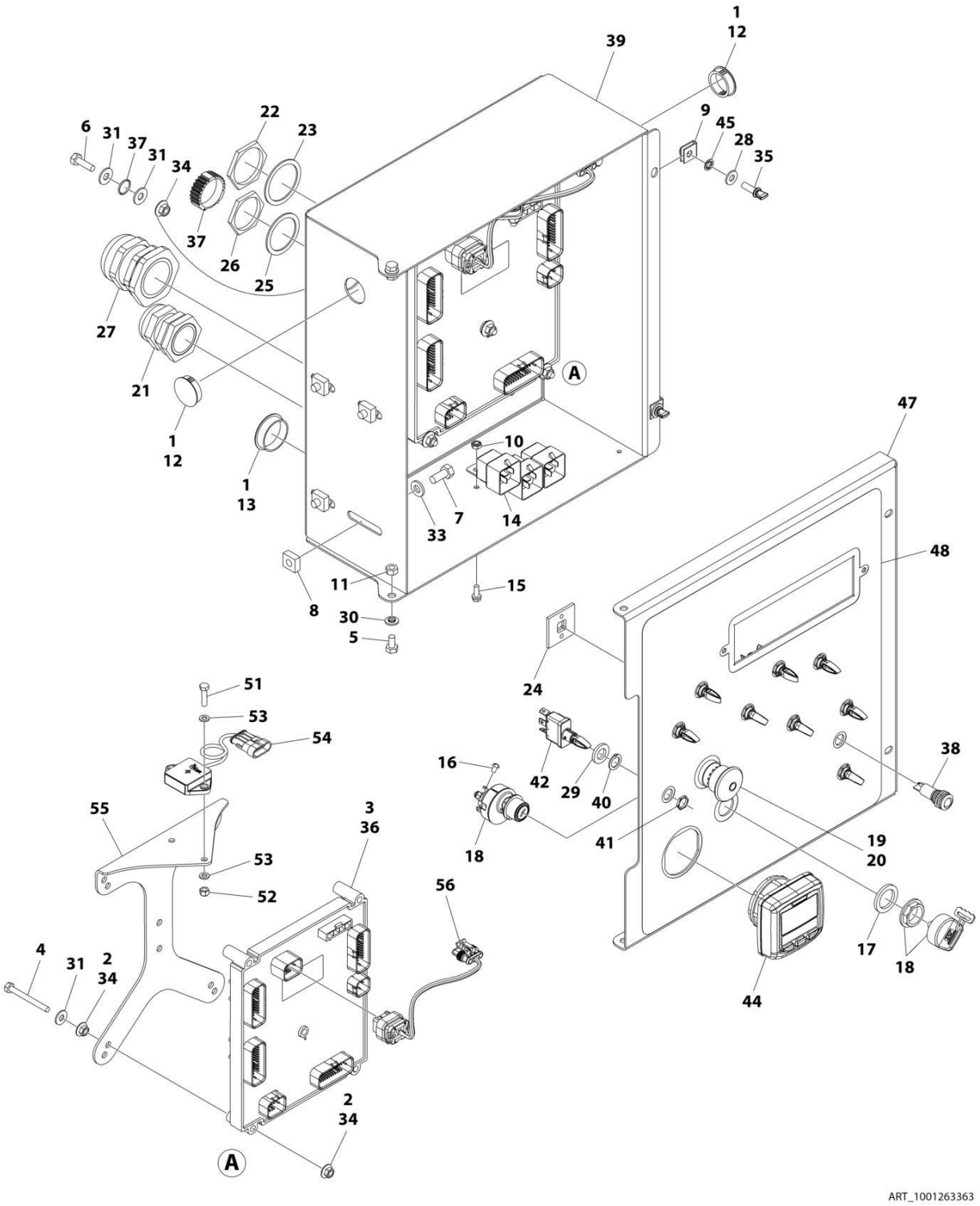

FIGURE 2-37. GROUND CONTROL BOX ASSEMBLY - WITH FORD ENGINES AND TOWER STOW - WITH DIGITAL DISPLAY

ITEM	PART NUMBER	QTY	DESCRIPTION	REV
	1001263363	Ref	GROUND CONTROL BOX ASSEMBLY	B
1	0100009	AR	Sealant	
2	0100011	AR	Compound, Locking	
3	0100048	AR	Grease, Dielectric	
4	0630548	5	Bolt 2-1/2	
5	0641404	2	Bolt 1/4 x 1/2	
6	0641407	1	Bolt 1/4 x 7/8	
7	0641506	4	Bolt 5/16 x 3/4	
8	3300205	4	Nut, Retainer	
9	3300353	2	Nut, Tinnerman	
10	3300408	3	Nut, Nylon Insert	
11	3311405	2	Nut 1/4	
12	3520031	2	Plug	
13	3520035	1	Plug	
14	3740049	3	Relay	
15	3900268	3	Screw #10x1/2	
16	3910804	6	Screw #8 x 1/4	
17	4070991	1	Shim	
18	4360469	1	Switch, Key	
18	2860030	1 Set	Key Replacement	
19	4360475	1	Switch, Emergency Stop	
19	7020175	1	Cap, Mushroom	
19	7020176	1	Block, Contact	
20	4360476	1	Switch, Contact Block	
21	4460426	1	Connector, Strain Relief	
22	4460470	1	Nut, Terminal	
23	4460471	1	Lockwasher, Terminal	
24	4460488	6	Mounting Base, Terminal	
25	4460496	1	Washer, Terminal	
26	4460497	1	Nut, Terminal	
27	4460526	1	Connector, Strain Relief	
28	4711400	2	Washer 1/4	
29	4740397	9	Spacer	
30	4740518	2	Washer	
31	4751400	7	Washer 1/4	
33	4891500	4	Washer 5/16	
34	77143013	11	Nut 1/4	
35	1001103308	2	Thumbscrew 1/4 x 3/4	
36	1001103667	1	Module, Ground Control (Please Verify Part Number on Module Decal Before Purchasing) (Note: Recalibration Required When Replaced)	
36	1001280600	1	Module, Ground Control (Please Verify Part Number on Module Decal Before Purchasing) (Note: Recalibration Required When Replaced)	
37	1001106736	1	Cap, Dust	
38	1001137364	1	Light, Indicator	
39	1001152175	1	Box	
40	1001155043	9	Washer	
41	1001155044	9	Nut 15/32	
42	1001155045	9	Switch, Toggle	

ITEM	PART NUMBER	QTY	DESCRIPTION	REV
43	1001170808	1	Control Valve Harness (Not Shown - See Separate Breakdown in ELECTRICAL Section)	
44	1001171482	1	Gauge, Display	
45	1001188874	2	Nut	
46	1001216230	1	Engine Harness (Not Shown - See Separate Breakdown in ELECTRICAL Section)	
47	1001263352	1	Lid	
48	1001263356	1	Decal - Ground Control Box	
49	1001266628	1	Ground Control Box Harness (Not Shown - See Separate Breakdown in ELECTRICAL Section)	
51	0760612	2	Bolt M6 x 25	
52	3290605	2	Nut M6	
53	4811700	4	Washer M6	
54	1001219601	1	Sensor, Tilt Dual Axis CAN	
55	1001271794	1	Bracket, Tilt Sensor	
56	1001276143	1	Harness, Tilt Sensor	

FIGURE 2-38. GROUND CONTROL BOX ASSEMBLY - WITH FORD ENGINES AND TOWER STOW - WITH MECHANICAL HOUR METER

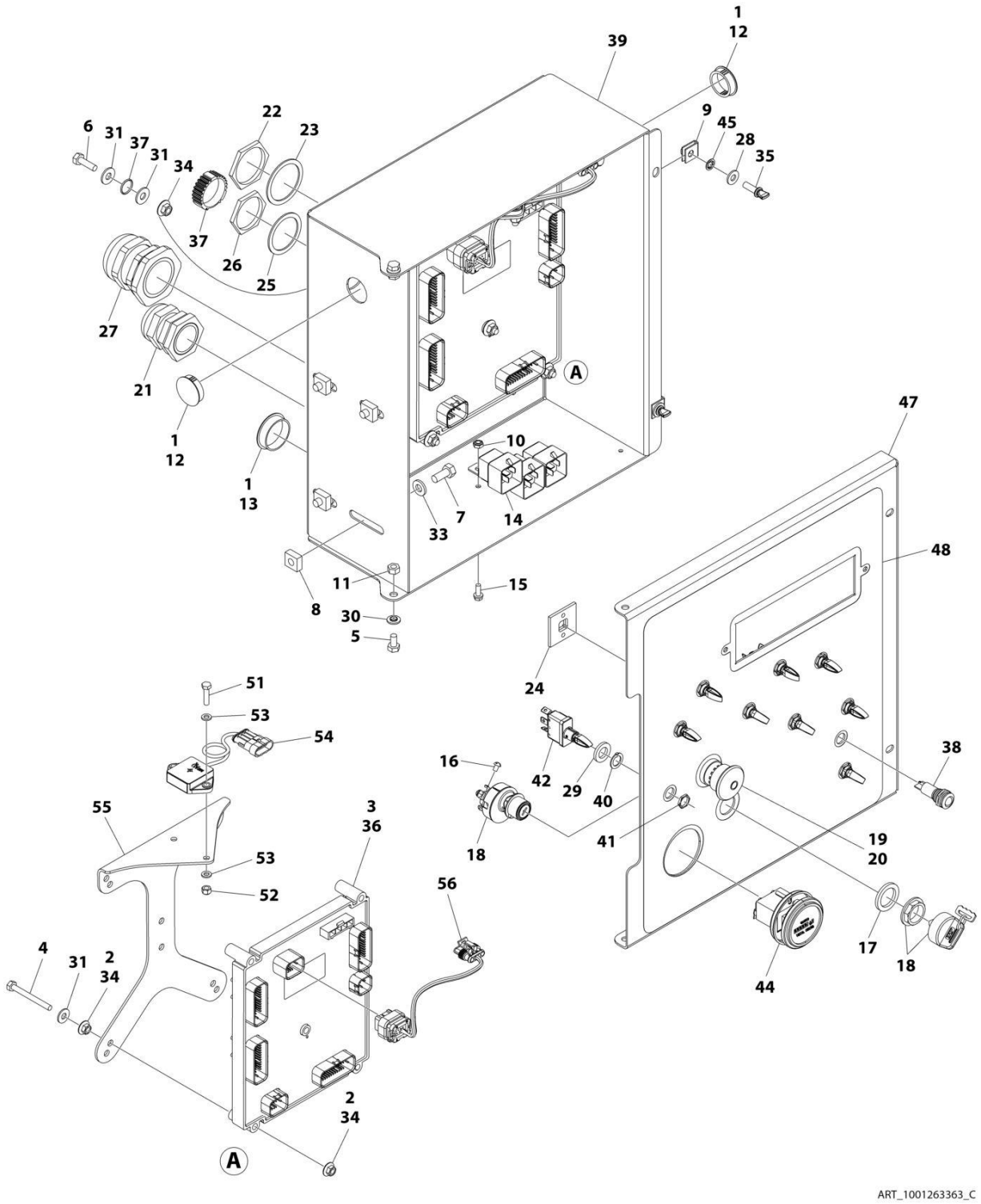

FIGURE 2-38. GROUND CONTROL BOX ASSEMBLY - WITH FORD ENGINES AND TOWER STOW - WITH MECHANICAL HOUR METER

ITEM	PART NUMBER	QTY	DESCRIPTION	REV
	1001263363	Ref	GROUND CONTROL BOX ASSEMBLY	C
1	0100009	AR	Sealant	
2	0100011	AR	Compound, Locking	
3	0100048	AR	Grease, Dielectric	
4	0630548	5	Bolt 2-1/2	
5	0641404	2	Bolt 1/4 x 1/2	
6	0641407	1	Bolt 1/4 x 7/8	
7	0641506	4	Bolt 5/16 x 3/4	
8	3300205	4	Nut, Retainer	
9	3300353	2	Nut, Tinnerman	
10	3300408	3	Nut, Nylon Insert	
11	3311405	2	Nut 1/4	
12	3520031	2	Plug	
13	3520035	1	Plug	
14	3740049	3	Relay	
15	3900268	3	Screw #10x1/2	
16	3910804	6	Screw #8 x 1/4	
17	4070991	1	Shim	
18	4360469	1	Switch, Key	
18	2860030	1 Set	Key Replacement	
19	4360475	1	Switch, Emergency Stop	
19	7020175	1	Cap, Mushroom	
19	7020176	1	Block, Contact	
20	4360476	1	Switch, Contact Block	
21	4460426	1	Connector, Strain Relief	
22	4460470	1	Nut, Terminal	
23	4460471	1	Lockwasher, Terminal	
24	4460488	6	Mounting Base, Terminal	
25	4460496	1	Washer, Terminal	
26	4460497	1	Nut, Terminal	
27	4460526	1	Connector, Strain Relief	
28	4711400	2	Washer 1/4	
29	4740397	9	Spacer	
30	4740518	2	Washer	
31	4751400	7	Washer 1/4	
33	4891500	4	Washer 5/16	
34	77143013	11	Nut 1/4	
35	1001103308	2	Thumbscrew 1/4 x 3/4	
36	1001280600	1	Module, Ground Control (Note: Recalibration Required When Replaced)	
37	1001106736	1	Cap, Dust	
38	1001137364	1	Light, Indicator	
39	1001152175	1	Box	
40	1001155043	9	Washer	
41	1001155044	9	Nut 15/32	
42	1001155045	9	Switch, Toggle	
43	1001170808	1	Control Valve Harness (Not Shown - See Separate Breakdown in ELECTRICAL Section)	
44	10836804	1	Hour Meter	

ITEM	PART NUMBER	QTY	DESCRIPTION	REV
45	1001188874	2	Nut	
46	1001216230	1	Engine Harness (Not Shown - See Separate Breakdown in ELECTRICAL Section)	
47	1001280403	1	Lid	
48	1001263356	1	Decal - Ground Control Box	
49	1001266628	1	Ground Control Box Harness (Not Shown - See Separate Breakdown in ELECTRICAL Section)	
51	0760612	2	Bolt M6 x 25	
52	3290605	2	Nut M6	
53	4811700	4	Washer M6	
54	1001219601	1	Sensor, Tilt Dual Axis CAN	
55	1001271794	1	Bracket, Tilt Sensor	
56	1001276143	1	Harness, Tilt Sensor	

FIGURE 2-39. LIGHT PANEL INSTALLATION

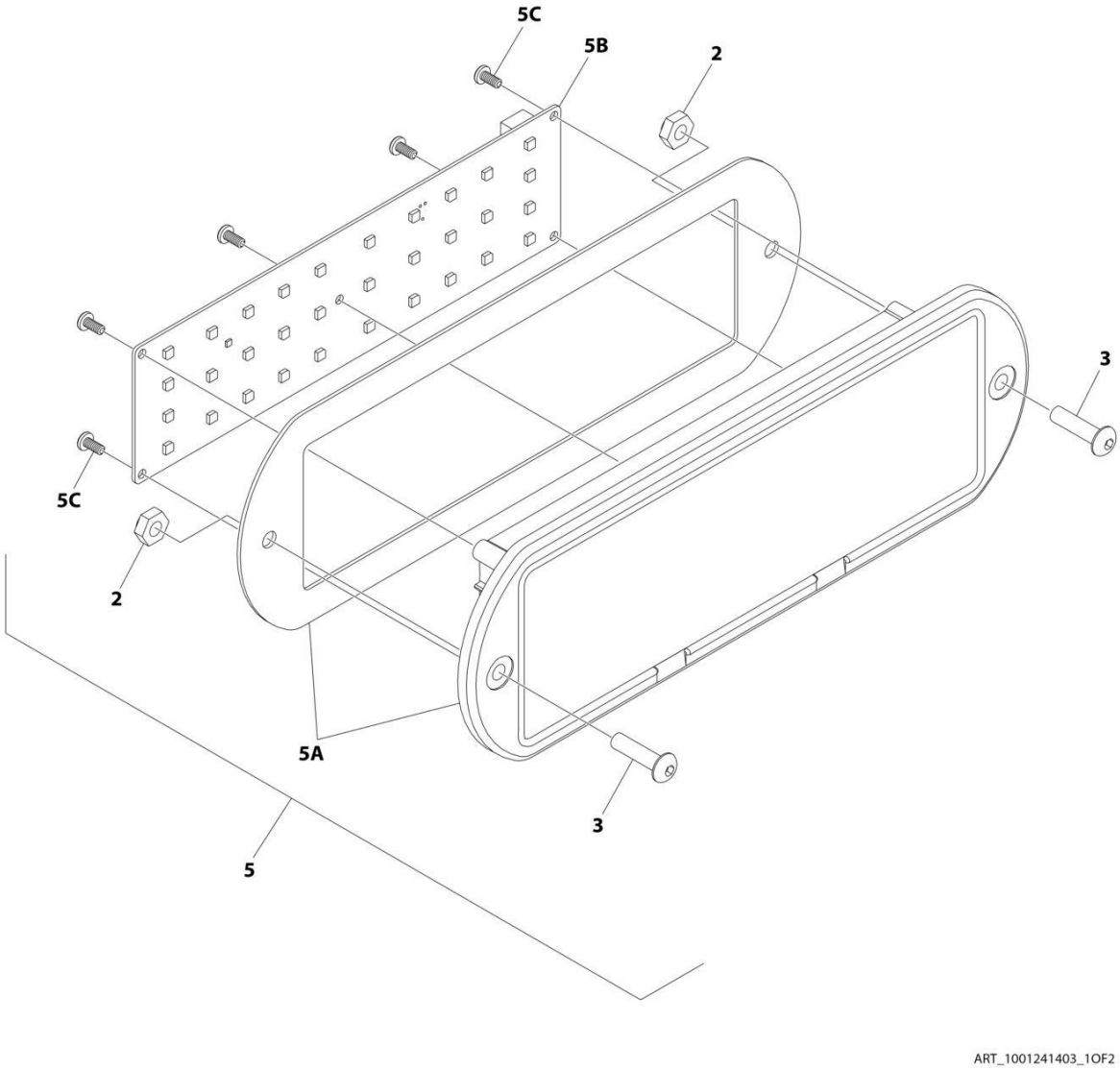

FIGURE 2-39. LIGHT PANEL INSTALLATION

ITEM	PART NUMBER	QTY	DESCRIPTION	REV
	1001241403	Ref	LIGHT PANEL INSTALLATION - GROUND CONTROL	C
2	3300408	2	Nut, Nylon Insert	
3	0630518	2	Screw #10 x 3/4	
5	1001238674	1	Light Panel Assembly	H
5A	1001236092	1	Lens Assembly (Includes Housing Shell, Decal/Lens with Icons & Gasket)	
5B	1001238732	1	Panel, LED Light	
5C		Ref	Screw	

FIGURE 2-40. ALARM INSTALLATION

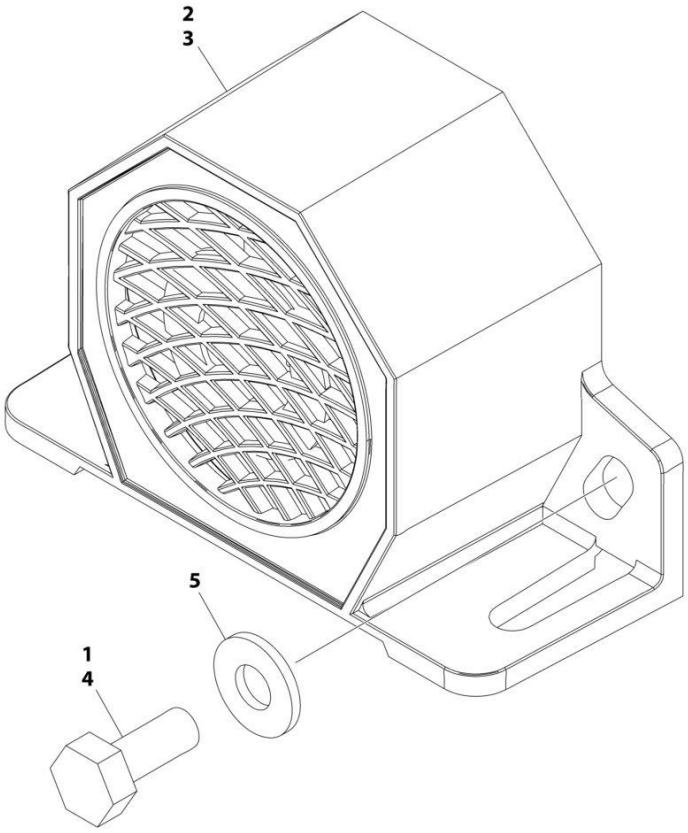

ART_1001158364

FIGURE 2-40. ALARM INSTALLATION

ITEM	PART NUMBER	QTY	DESCRIPTION	REV
	1001158364	Ref	ALARM INSTALLATION	A
1	0100011	AR	Compound, Locking	
2	0100048	AR	Grease, Dielectric	
3	0140044	1	Alarm	
4	0641405	2	Bolt 1/4 x 5/8	
5	4711400	2	Washer 1/4	

FIGURE 2-41. WHITE NOISE ALARM INSTALLATION - ADJUSTABLE AMBIENT

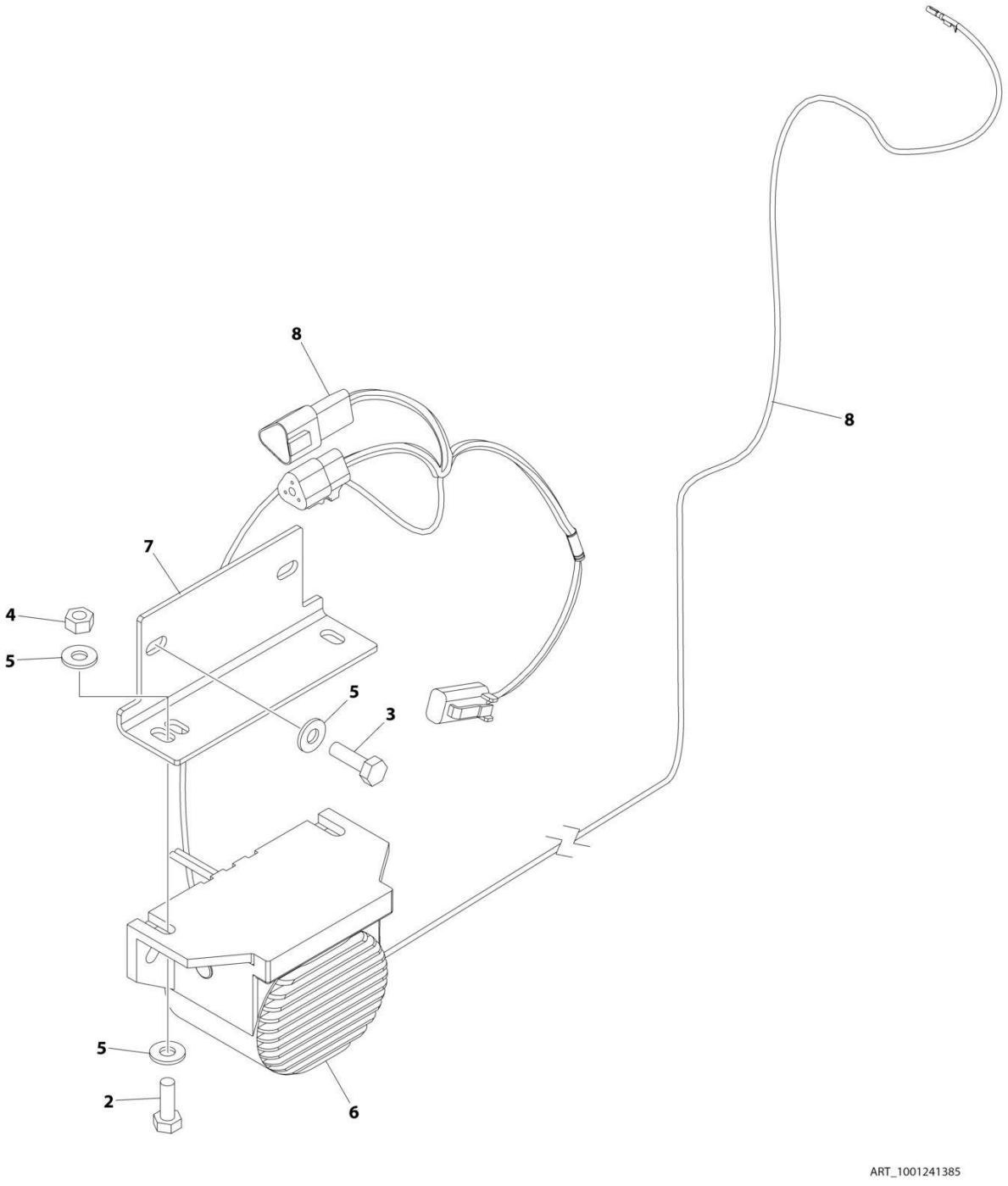

FIGURE 2-41. WHITE NOISE ALARM INSTALLATION - ADJUSTABLE AMBIENT

ITEM	PART NUMBER	QTY	DESCRIPTION	REV
	1001241385	Ref	WHITE NOISE ALARM INSTALLATION	A
1	0100048	AR	Compound, Silicone (Not Shown)	
2	0641406	2	Bolt 1/4 x 3/4	
3	0641407	2	Bolt 1/4 x 7/8	
4	3311405	2	Nut 1/4	
5	4711400	6	Washer 1/4	
6	1001182806	1	Alarm	
7	1001231886	1	Plate	
8	1001243682	1	White Noise Motion Alarm Harness (See Separate Breakdown in this Section)	

FIGURE 2-42. WHITE NOISE MOTION ALARM INSTALLATION - AMBIENT

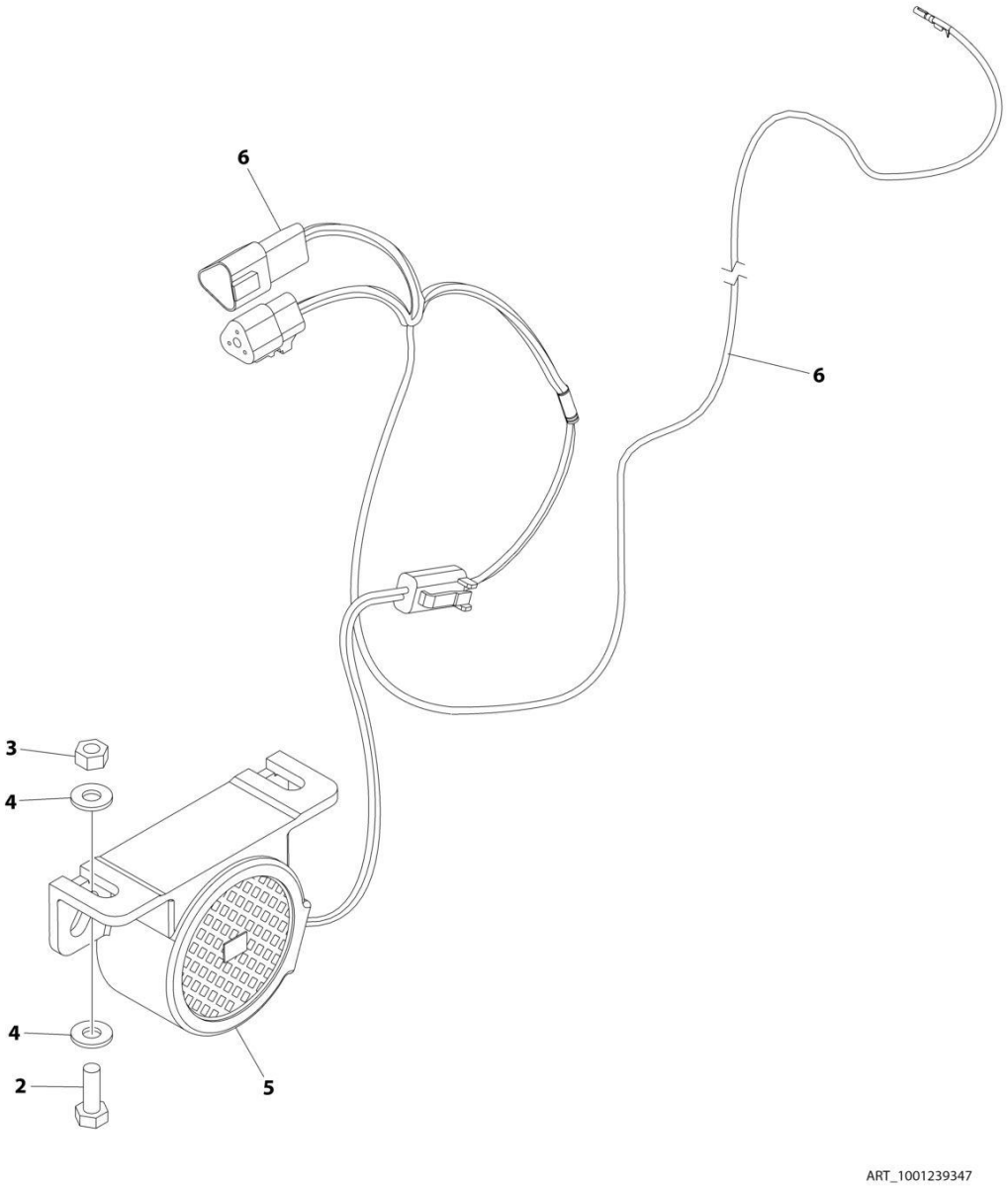

FIGURE 2-42. WHITE NOISE MOTION ALARM INSTALLATION - AMBIENT

ITEM	PART NUMBER	QTY	DESCRIPTION	REV
	1001239347	Ref	WHITE NOISE MOTION ALARM INSTALLATION	A
1	0100048	AR	Compound, Silicone (Not Shown)	
2	0641406	2	Bolt 1/4 x 3/4	
3	3311405	2	Nut 1/4	
4	4711400	4	Washer 1/4	
5	1001184682	1	Alarm	
6	1001243682	1	White Noise Motion Alarm Harness (See Separate Breakdown in this Section)	

FIGURE 2-43. STROBE LIGHT INSTALLATION (AMBER)

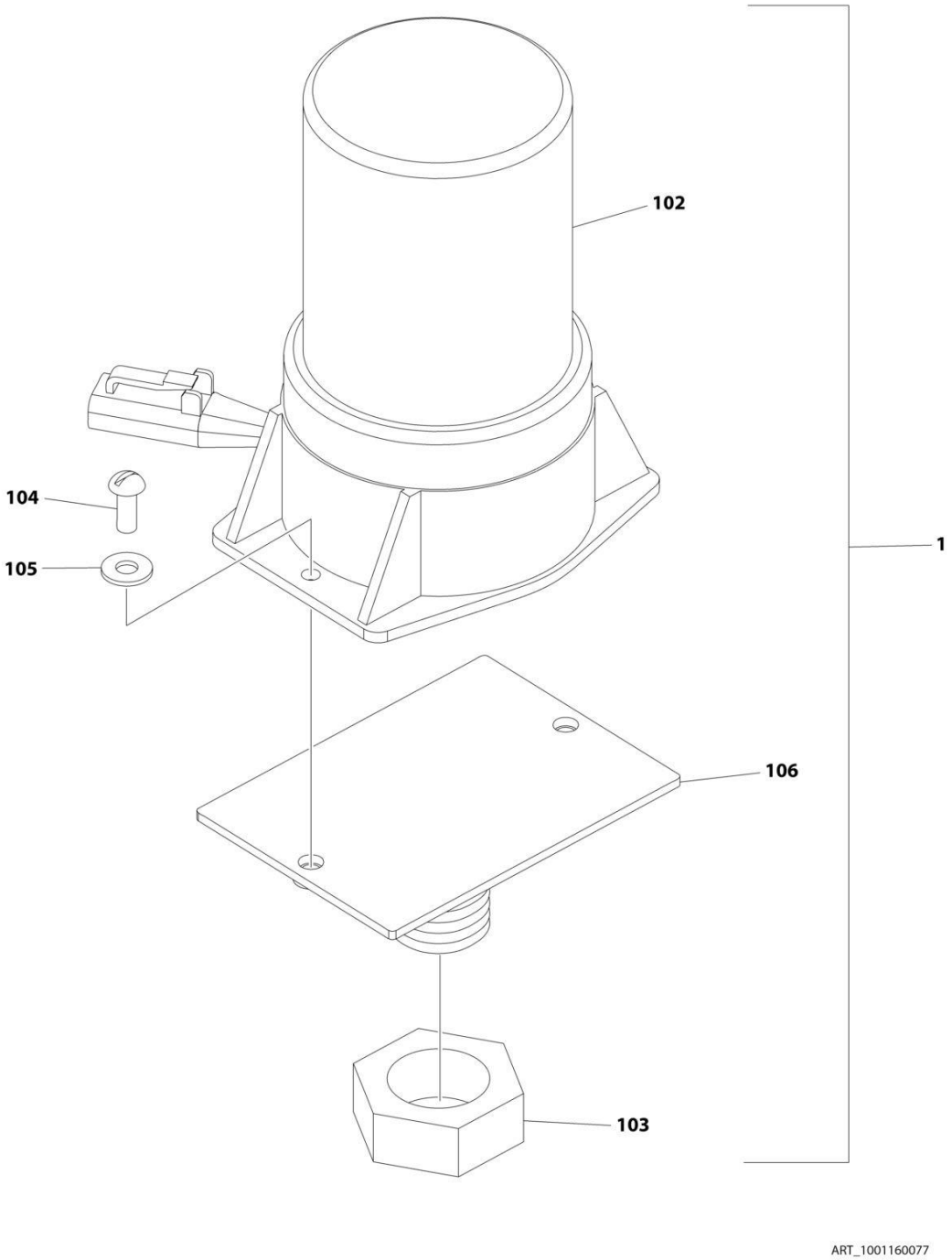

FIGURE 2-43. STROBE LIGHT INSTALLATION (AMBER)

ITEM	PART NUMBER	QTY	DESCRIPTION	REV
	1001160077	Ref	STROBE LIGHT INSTALLATION (AMBER)	B
1	1001150406	1	Strobe Light Assembly (Includes Items 102-106)	D
102	2920161	1	Strobe Light/Harness Assembly	
102	7016319	1	Bulb	
102	7016372	1	Lens	
103	3312602	1	Nut 1	
104	3900085	2	Screw #10 x 1/2	
105	4751000	2	Washer 1/4	
106	1001149994	1	Mount, Strobe	

FIGURE 2-44. STROBE LIGHT INSTALLATION (BLUE)

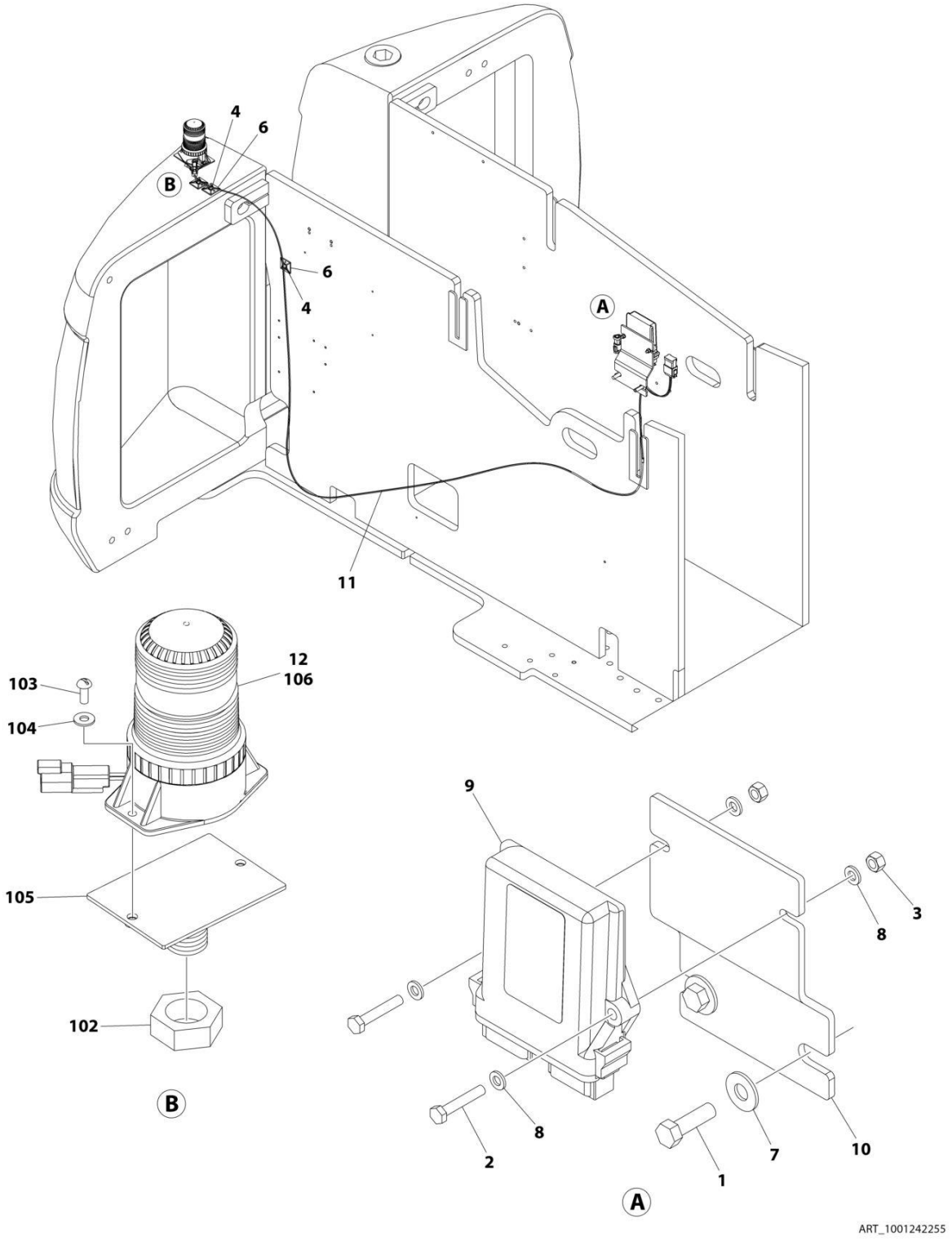

FIGURE 2-44. STROBE LIGHT INSTALLATION (BLUE)

ITEM	PART NUMBER	QTY	DESCRIPTION	REV
	1001242255	Ref	STROBE LIGHT INSTALLATION (BLUE)	A
1	0641610	2	Bolt 3/8 x 1-1/4	
2	0700615	2	Bolt 6 x 35	
3	3290607	2	Nut M6	
4	4240032	AR	Tie-Strap	
5	4240033	AR	Tie-Cable (Not Shown)	
6	4460488	AR	Base, Terminal, Mounting	
7	4751600	2	Washer 3/8	
8	4811700	4	Washer M6	
9	1001142683	1	Module, Control - Beacon	
10	1001142722	1	Bracket	
11	1001142736	1	Beacon Control Harness (See Separate Breakdown in ELECTRICAL SECTION)	
12	1001217005	1	Beacon Kit - Blue (Includes Items 102 - 106)	
102	3312602	1	Nut	
103	3900085	2	Screw	
104	4751000	2	Washer #10	
105	1001149994	1	Mount, Strobe	
106	1001200910	1	Light, Beacon	

FIGURE 2-45. STROBE LIGHT INSTALLATION (RED)

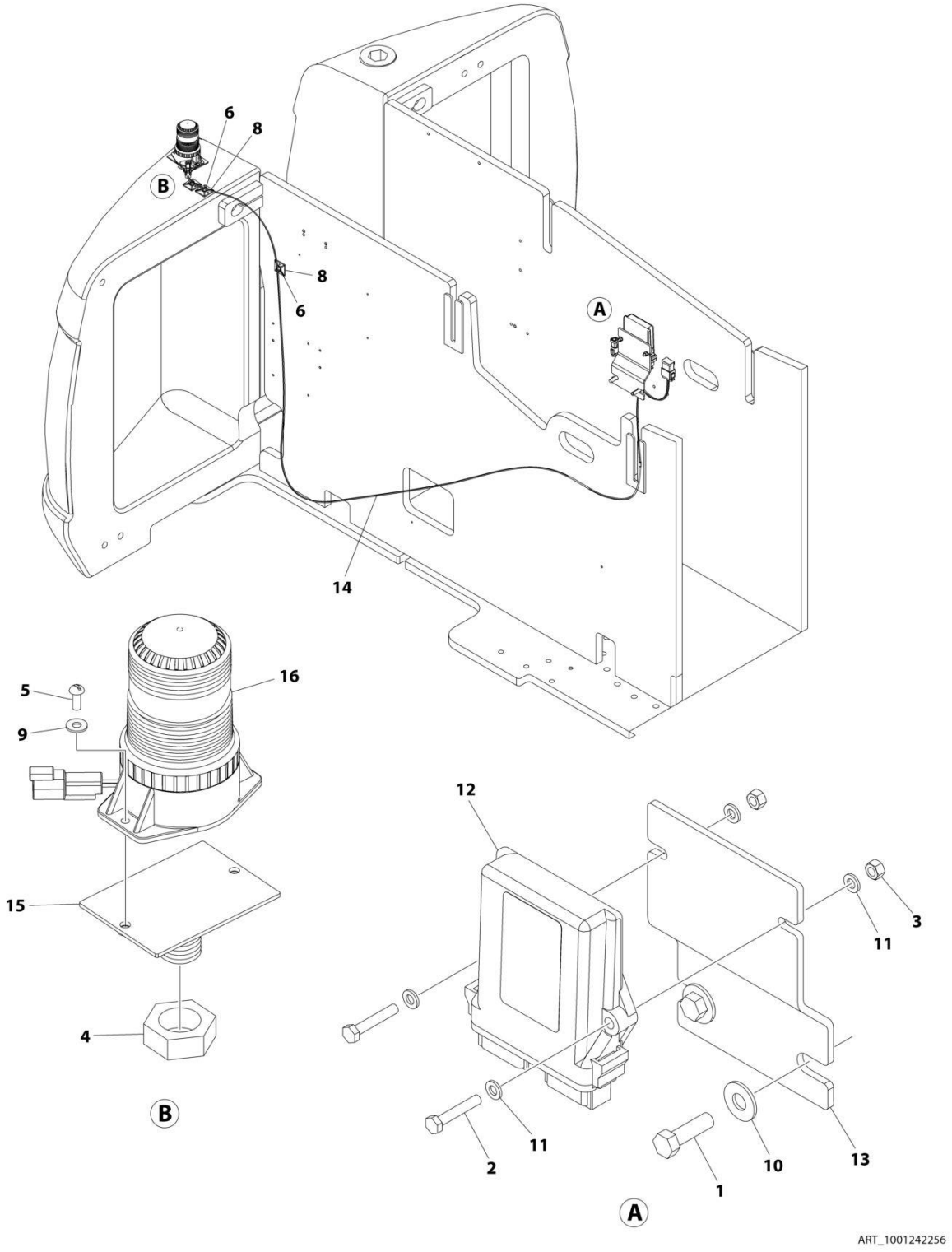

FIGURE 2-45. STROBE LIGHT INSTALLATION (RED)

ITEM	PART NUMBER	QTY	DESCRIPTION	REV
	1001242256	Ref	STROBE LIGHT INSTALLATAION (RED)	A
1	0641610	2	Bolt 3/8 x 1-1/4	
2	0700615	2	Bolt 6 x 35	
3	3290607	2	Nut M6	
4	3312602	1	Nut	
5	3900085	2	Screw	
6	4240032	AR	Tie Strap	
7	4240033	AR	Tie Cable (Not Shown)	
8	4460488	AR	Base, Terminal, Mounting	
9	4751000	2	Washer	
10	4751600	2	Washer 3/8	
11	4811700	4	Washer	
12	1001142683	1	Module, Control	
13	1001142722	1	Bracket	
14	1001142736	1	Beacon Control Harness (See Separate Breakdown in ELECTRICAL SECTION)	
15	1001149994	1	Mount, Strobe	
16	1001207004	1	Light, Beacon	

FIGURE 2-46. HOODS INSTALLATION - ABS (DEUTZ D2011 ENGINES)

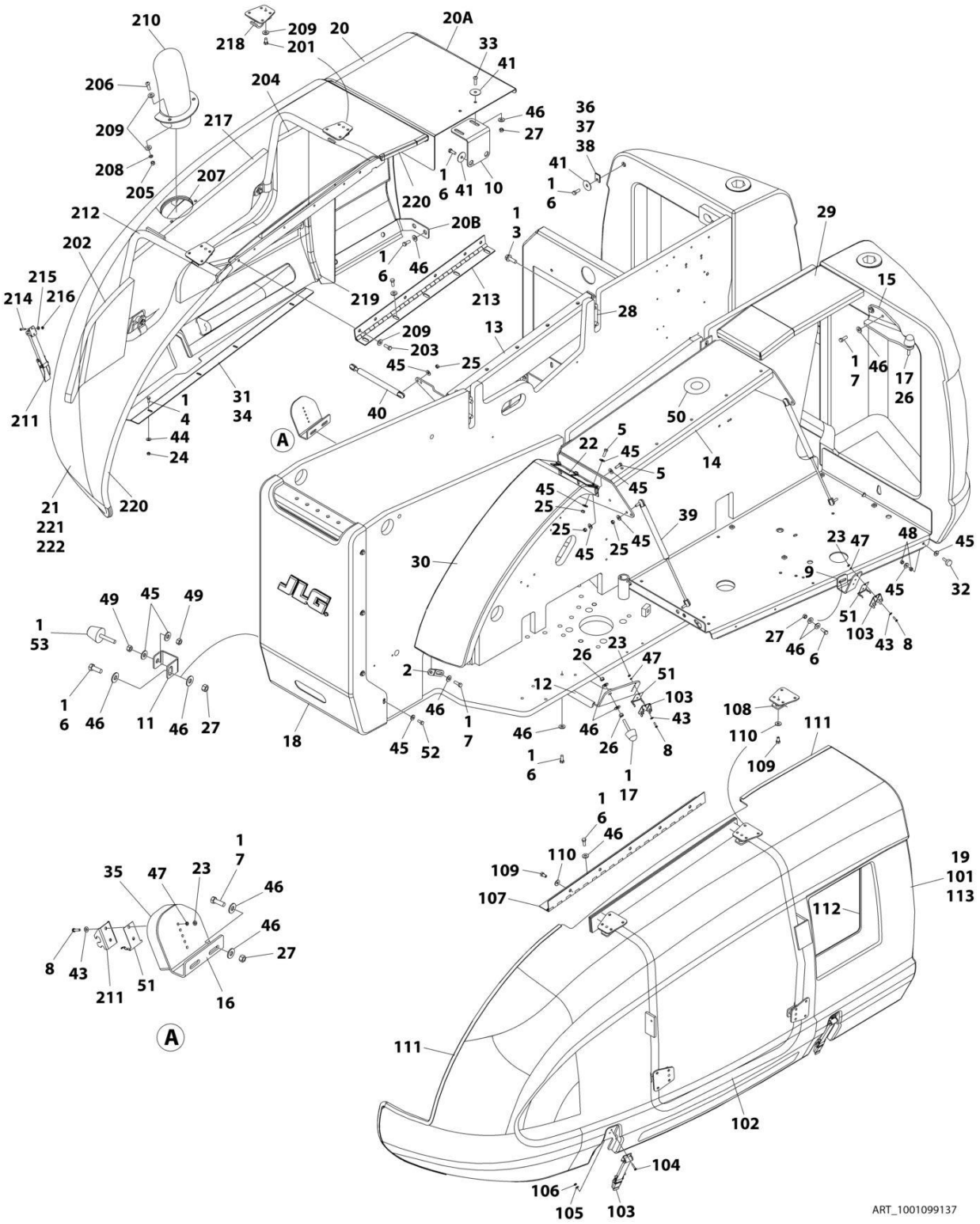

FIGURE 2-46. HOODS INSTALLATION - ABS (DEUTZ D2011 ENGINES)

ITEM	PART NUMBER	QTY	DESCRIPTION	REV
	1001099137	Ref	HOODS INSTALLATION	F
1	0100011	AR	Compound, Locking	
2	0362770	1	Bar, Panel Mounting	
3	0811812	8	Bolt	
4	0641406	4	Bolt 1/4 x 3/4	
5	0641508	6	Bolt 5/16 x 1	
6	0641608	22	Bolt 3/8 x 1	
7	0641609	5	Bolt 3/8 x 1-1/8	
8	0721006	6	Screw #10 x 3/4	
9	0902143	1	Bracket, Latch (Tank Side)	
10	0902161	1	Bracket, Hood Spacer Mounting (Engine Side)	
11	0902219	2	Bracket, Bumper	
12	0902223	1	Bracket, Latch (Tank Side)	
13	1001207558	1	Bracket, Hood Mounting (Engine Side)	
14	0902412	1	Bracket, Hood Mounting (Tank Side)	
15	0902426	1	Bracket, Bumper - Counterweight Mounted	
16	0902491	1	Bracket, Latch (Engine Side)	
17	0940071	2	Bumper	
18	1670842	1	Cover, Turntable End	
19	1671228	1	Hood Assembly - Tank Side (See Items 101-113 for Breakdown)	
19		Ref	Note: Replacement Decals Must be Ordered Separately - See DECALS SECTION.	
20	1671233	1	Spacer Assembly	
20A	3960453	68 in /1.73m	Seal	
20B	0903308	1	Bracket	
21	1001099138	1	Hood Assembly - Engine Side (See Items 201-221 for Breakdown):	
21		Ref	Note: Replacement Decals Must be Ordered Separately - See DECAL SECTION.	
22	2600244	1	Adapter, Panel Hinge	
23	3311001	6	Nut #10	
24	3311405	4	Nut 1/4	
25	3311505	9	Nut 5/16	
26	3311601	4	Nut 3/8	
27	3311605	7	Nut 3/8	
28	1001150260	4	Plate, Hinge Block	
29	1001290021	1	Cover, Top (Tank Side)	
30	3380444	1	Panel, Adapter	
31	3571712	1	Plate, Seal	
32	0940049	1	Stopper, Hood	
33	3900232	2	Screw 3/8 x 1-1/4	
34	3960389	3.5 ft/1m	Seal	
35	3960470	1	Seal, Latch	
36	4070410	AR	Shim 1/16	
37	4070411	AR	Shim 1/8	
38	4070412	AR	Shim 3/16	
39	4160139	2	Spring, Gas (Tank Side)	
40	4160143	1	Spring, Gas (Engine Side)	
41	4740076	5	Washer, Fender	

ITEM	PART NUMBER	QTY	DESCRIPTION	REV
43	4751000	6	Washer #10	
44	4751400	4	Washer 1/4	
45	4751500	29	Washer 5/16	
46	4751600	35	Washer 3/8	
47	4761000	6	Washer #10	
48	3311501	2	Nut 5/16	
49	3321501	4	Nut 5/16	
50	1120601	1	Plug	
51	2940188	3	Latch	
52	0641506	8	Bolt, 5/16 x 3/4	
53	0940088	2	Bumper	
	1671228	Ref	HOOD ASSEMBLY (TANK SIDE)	A
101	1671231	1	Hood	
102	1671232	1	Frame, Tubular	
103	2940088	2	Latch	
104	0721008	4	Screw, #10 x 1	
105	4751000	4	Washer #10	
106	3311001	4	Nut #10	
107	2600233	1	Hinge	
108	1321384	4	Hold Down	
109	0641606	9	Bolt 3/8 x 3/4	
110	4711600	9	Washer 3/8	
111	3960464	83 in /2.11m	Seal	
112	3960438	55 in/1.4m	Seal	
113	3960462	53 in /1.35m	Seal	
	1001099138	Ref	HOOD ASSEMBLY (ENGINE SIDE)	B
201	0641606	4	Bolt 3/8 x 3/4	
202	2820233	1	Insulation, Rear Sound	
203	0641608	6	Insulation, Center Sound	
204	2820235	1	Insulation, Rear Sound	
205	3311605	2	Nut 3/8	
206	3900232	2	Screw 3/8 x 1-1/4	
207	1001101623	1	Shield, Heat Gasket	
208	4740500	2	Washer	
209	4751600	14	Washer 3/8	
210	1001099121	1	Exhaust Tube Weldment	
211	2940088	1	Latch	
212	1671230	1	Frame, Tubular	
213	2600209	1	Hinge	
214	0721008	2	Screw, #10 x 1	
215	4751000	2	Washer #10	
216	3311001	2	Nut #10	
217	2820234	AR	Insulation	
218	1321384	4	Hold Down	
219	3960462	61 in /1.55m	Seal	
220	3960464	65 in /1.67m	Seal	
221	1001101673	AR	Insulation	

FIGURE 2-47. HOODS INSTALLATION - ABS (DEUTZ TD2.9L4 ENGINES)

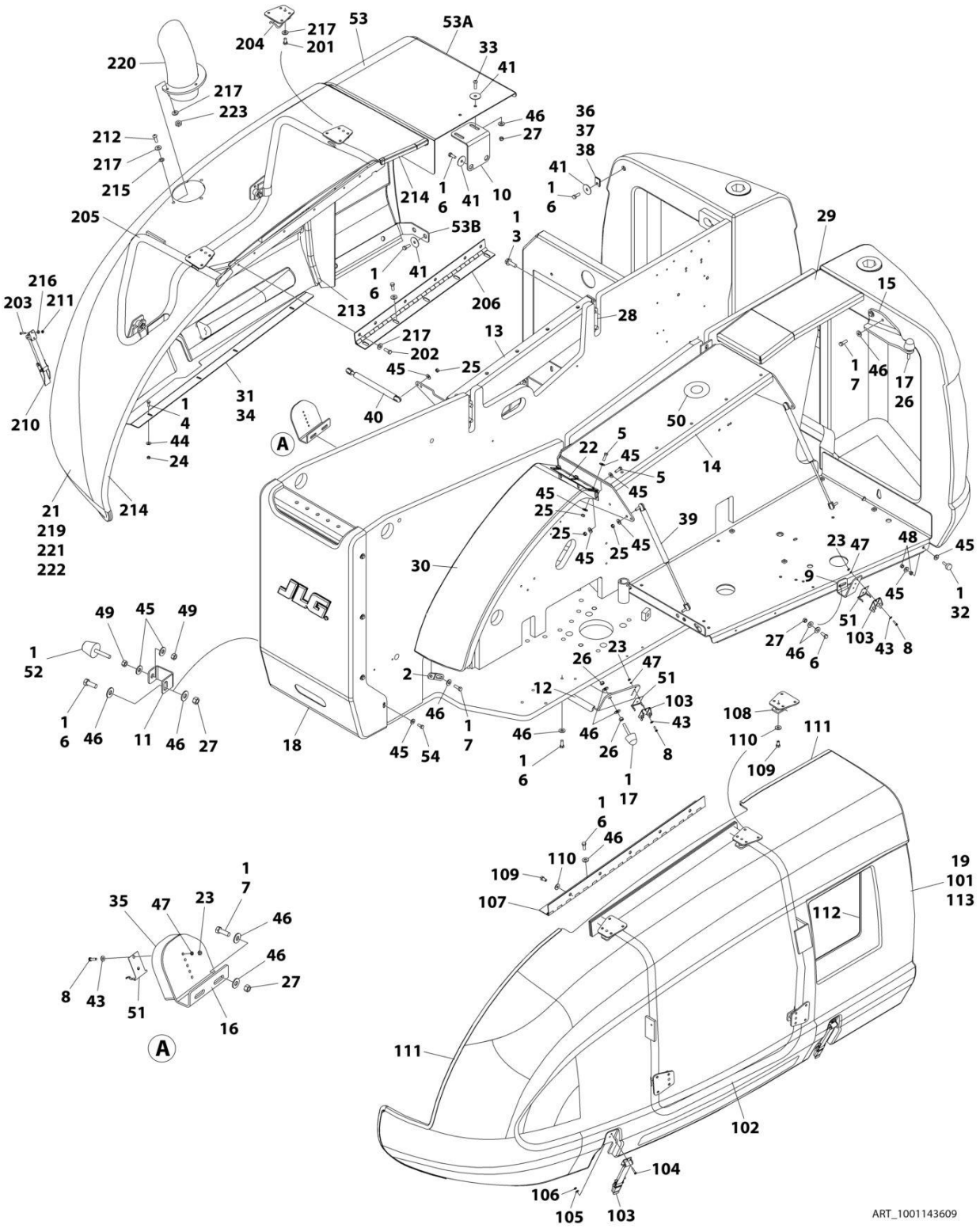

FIGURE 2-47. HOODS INSTALLATION - ABS (DEUTZ TD2.9L4 ENGINES)

ITEM	PART NUMBER	QTY	DESCRIPTION	REV
	1001143609	Ref	HOODS INSTALLATION	F
1	0100011	AR	Compound, Locking	
2	0362770	1	Bar, Panel Mounting	
3	0811812	8	Bolt	
4	0641406	4	Bolt 1/4 x 3/4	
5	0641508	AR	Bolt 5/16 x 1	
6	0641608	22	Bolt 3/8 x 1	
7	0641609	5	Bolt 3/8 x 1-1/8	
8	0721006	6	Screw #10 x 3/4	
9	0902143	1	Bracket, Latch (Tank Side)	
10	0902161	1	Bracket, Hood Spacer Mounting (Engine Side)	
11	0902219	2	Bracket, Bumper	
12	0902223	1	Bracket, Latch (Tank Side)	
13	1001207558	1	Bracket, Hood Mounting (Engine Side)	
14	0902412	1	Bracket, Hood Mounting (Tank Side)	
15	0902426	1	Bracket, Bumper - Counterweight Mounted	
16	0902491	1	Bracket, Latch (Engine Side)	
17	0940071	2	Bumper	
18	1670842	1	Cover, Turntable End	
19	1671228	1	Hood Assembly - Tank Side (See Items 101-113 for Breakdown)	
19		Ref	Note: Replacement Decals Must be Ordered Separately - See DECALS Section.	
21	1001143607	1	Hood Assembly - Engine Side (See Items 201-223 for Breakdown)	
21		Ref	Note: Replacement Decals Must be Ordered Separately - See DECAL Section.	
22	2600244	1	Adapter, Panel Hinge	
23	3311001	6	Nut #10	
24	3311405	4	Nut 1/4	
25	3311505	9	Nut 5/16	
26	3311601	AR	Nut 3/8	
27	3311605	7	Nut 3/8	
28	1001150260	4	Plate, Hinge Block	
29	1001290021	1	Cover, Top (Tank Side)	
30	3380444	1	Panel, Adapter	
31	1001143858	1	Plate, Seal (Deutz TD2.9L4 and Deutz TD2.9L4 (Stage V Pre-Buy) Engines)	
32	0940049	1	Stopper, Hood	
33	3900232	2	Screw 3/8 x 1-1/4	
34	3960389	3.5 ft/1m	Seal	
35	3960470	1	Seal, Latch	
36	4070410	AR	Shim 1/16	
37	4070411	AR	Shim 1/8	
38	4070412	AR	Shim 3/16	
39	4160139	2	Spring, Gas (Tank Side)	
40	4160143	1	Spring, Gas (Engine Side)	
41	4740076	5	Washer, Fender	
43	4751000	6	Washer #10	
44	4751400	4	Washer 1/4	
45	4751500	AR	Washer 5/16	
46	4751600	AR	Washer 3/8	

ITEM	PART NUMBER	QTY	DESCRIPTION	REV
47	4761000	6	Washer #10	
48	3311501	2	Nut 5/16	
49	3321501	AR	Nut 5/16	
50	1120601	1	Plug	
51	2940188	3	Latch	
52	0940088	2	Stopper	
53	1001149673	1	Spacer	
54	0641506	8	Screw 5/16 x 3/4	
	1671228	Ref	HOOD ASSEMBLY (TANK SIDE)	A
101	1671231	1	Hood	
102	1671232	1	Frame, Tubular	
103	2940088	2	Latch	
104	0721008	4	Screw, Machine #10 x 1	
105	4751000	4	Washer #10	
106	3311001	4	Nut #10	
107	2600233	1	Hinge	
108	1321384	4	Hold Down	
109	0641606	9	Bolt 3/8 x 3/4	
110	4711600	9	Washer 3/8	
111	3960464	83 in /2.11m	Seal	
112	3960438	55 in/1.4m	Seal	
113	3960462	53 in /1.35m	Seal	
	1001143607	Ref	HOOD ASSEMBLY (ENGINE SIDE)	G
201	0641606	4	Bolt 3/8 x 3/4	
202	0641608	6	Bolt 3/8 x 1	
203	0721008	2	Screw #10 x 1	
204	1321384	4	Hold Down	
205	1001153435	1	Frame, Tubular	
206	2600209	1	Hinge	
210	2940088	1	Latch	
211	3311001	2	Nut #10	
212	3900316	3	Bolt 3/8 x 1	
212	88261039	3	Bolt 3/8 x 2	
213	3960462	61 in /1.55m	Seal	
214	3960464	65 in /1.67m	Seal	
215	4740500	3	Washer	
216	4751000	2	Washer #10	
217	4751600	16	Washer 3/8	
220	1001143611	1	Pipe, Exhaust	
221	1001152566	AR	Insulate, Heat	
222	1001117140	AR	Tape	
223	3311605	3	Nut 3/8	

FIGURE 2-48. HOODS INSTALLATION - ABS (DEUTZ TD2.9L4 (STAGE V) ENGINES)

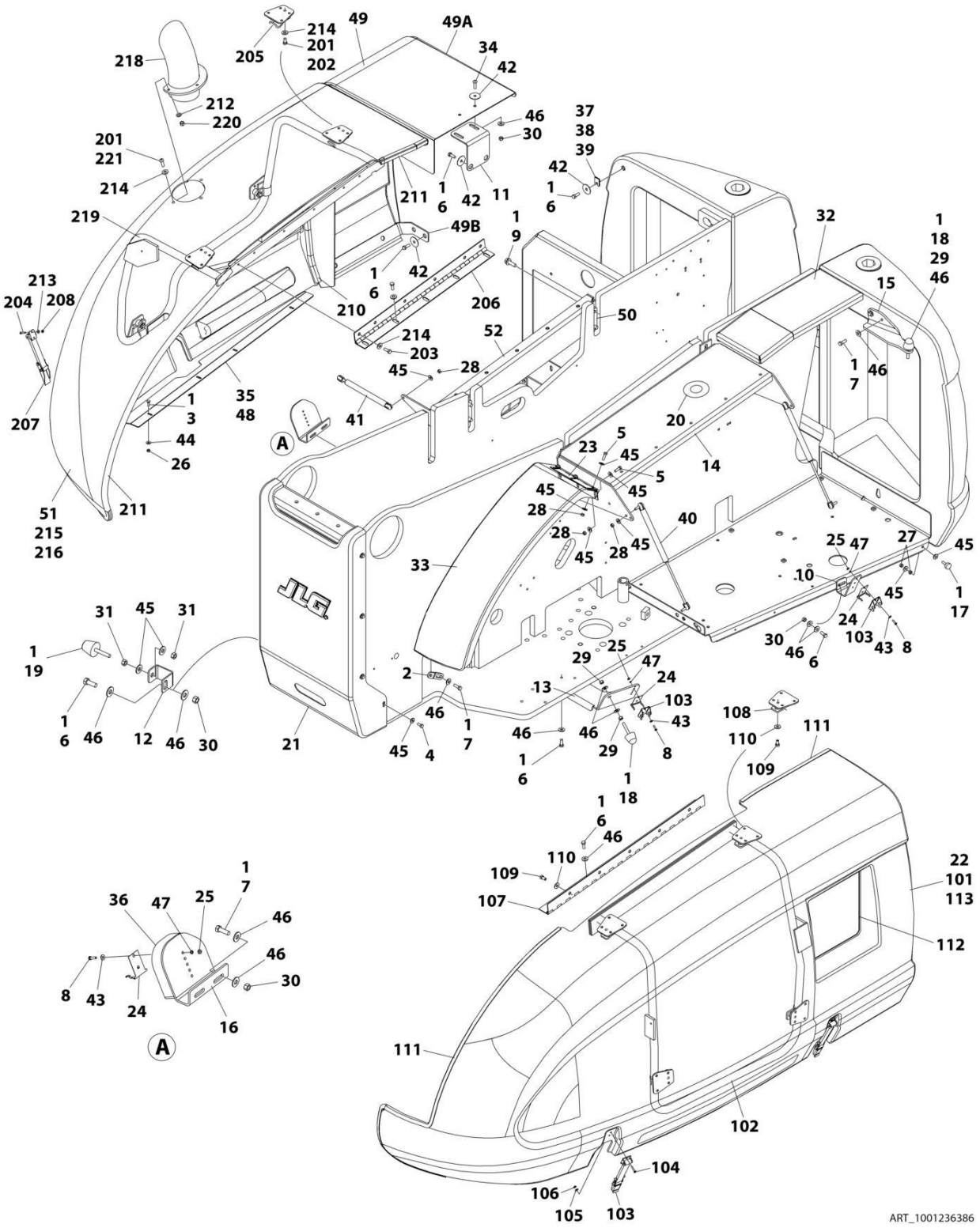

FIGURE 2-48. HOODS INSTALLATION - ABS (DEUTZ TD2.9L4 (STAGE V) ENGINES)

ITEM	PART NUMBER	QTY	DESCRIPTION	REV
	1001236386	Ref	HOODS INSTALLATION	C
1	0100011	AR	Compound, Locking	
2	0362770	1	Bar, Panel Mounting	
3	0641406	4	Bolt 1/4 x 3/4	
4	0641506	8	Bolt 5/16 x 3/4	
5	0641508	6	Bolt 5/16 x 1	
6	0641608	21	Bolt 3/8 x 1	
7	0641609	5	Bolt 3/8 x 1-1/8	
8	0721006	6	Screw #10 x 3/4	
9	0811812	8	Bolt	
10	0902143	1	Bracket, Latch (Tank Side)	
11	0902161	1	Bracket, Hood Spacer Mounting (Engine Side)	
12	0902219	1	Bracket, Bumper	
13	0902223	1	Bracket, Latch (Tank Side)	
14	0902412	1	Bracket, Hood Mounting (Tank Side)	
15	0902426	1	Bracket, Bumper - Counterweight Mounted	
16	0902491	1	Bracket, Latch (Engine Side)	
17	0940049	1	Stopper, Hood	
18	0940071	2	Bumper	
19	0940088	2	Stopper	
20	1120601	1	Plug	
21	1670842	1	Cover, Turntable End	
22	1671228	1	Hood Assembly - Tank Side (See Items 101-113 for Breakdown)	
22		Ref	Note: Replacement Decals Must be Ordered Separately - See DECALS SECTION.	
23	2600244	1	Adapter, Panel Hinge	
24	2940188	3	Latch	
25	3311001	6	Nut #10	
26	3311405	4	Nut 1/4	
27	3311501	2	Nut 5/16	
28	3311505	9	Nut 5/16	
29	3311601	4	Nut 3/8	
30	3311605	6	Nut 3/8	
31	3321501	4	Nut 5/16	
32	1001290021	1	Cover, Top (Tank Side)	
33	3380444	1	Panel, Adapter	
34	3900232	2	Screw 3/8 x 1-1/4	
35	3960389	3.5 ft/1m	Seal	
36	3960470	1	Seal, Latch	
37	4070410	AR	Shim 1/16	
38	4070411	AR	Shim 1/8	
39	4070412	AR	Shim 3/16	
40	4160139	2	Spring, Gas (Tank Side)	
41	4160143	1	Spring, Gas (Engine Side)	
42	4740076	7	Washer, Fender	
43	4751000	6	Washer #10	
44	4751400	4	Washer 1/4	
45	4751500	29	Washer 5/16	
46	4751600	31	Washer 3/8	
47	4761000	6	Washer #10	

ITEM	PART NUMBER	QTY	DESCRIPTION	REV
48	1001143858	1	Plate, Seal (Deutz TD2.9L4 and Deutz TD2.9L4 (Stage V Pre-Buy) Engines)	
49	1001149673	1	Spacer	
50	1001150260	4	Plate, Hinge Block	
51	1001236387	1	Hood Assembly - Engine Side (See Items 201-221 for Breakdown)	
51		Ref	Note: Replacement Decals Must be Ordered Separately - See DECAL SECTION.	
52	1001207558	1	Bracket, Hood Mounting (Engine Side)	
	1671228	Ref	HOOD ASSEMBLY (TANK SIDE)	A
101	1671231	1	Hood	
102	1671232	1	Frame, Tubular	
103	2940088	2	Latch	
104	0721008	4	Screw, Machine #10 x 1	
105	4751000	4	Washer #10	
106	3311001	4	Nut #10	
107	2600233	1	Hinge	
108	1321384	4	Hold Down	
109	0641606	9	Bolt 3/8 x 3/4	
110	4711600	9	Washer 3/8	
111	3960464	83 in /2.11m	Seal	
112	3960438	55 in/1.4m	Seal	
113	3960462	53 in /1.35m	Seal	
	1001236387	Ref	HOOD ASSEMBLY (ENGINE SIDE)	C
201	0100011	AR	Compound, Locking	
202	0641606	4	Bolt 3/8 x 3/4	
203	0641608	6	Bolt 3/8 x 1	
204	0721008	2	Screw #10 x 1	
205	1321384	4	Hold Down	
206	2600209	1	Hinge	
207	2940088	1	Latch	
208	3311001	2	Nut #10	
210	3960462	61 in /1.55m	Seal	
211	3960464	65 in/1.67m	Seal	
212	4740500	3	Washer	
213	4751000	2	Washer #10	
214	4751600	16	Washer 3/8	
215	1001117140	AR	Tape	
216	1001270099	AR	Insulate, Heat	
218	1001236389	1	Pipe, Exhaust	
219	1001236871	1	Frame, Tubular	
220	3271601	1	Nut 3/8	
221	3900232	3	Screw 3/8 x 1-1/4	

FIGURE 2-49. HOODS INSTALLATION - STEEL (DEUTZ D2011 ENGINES)

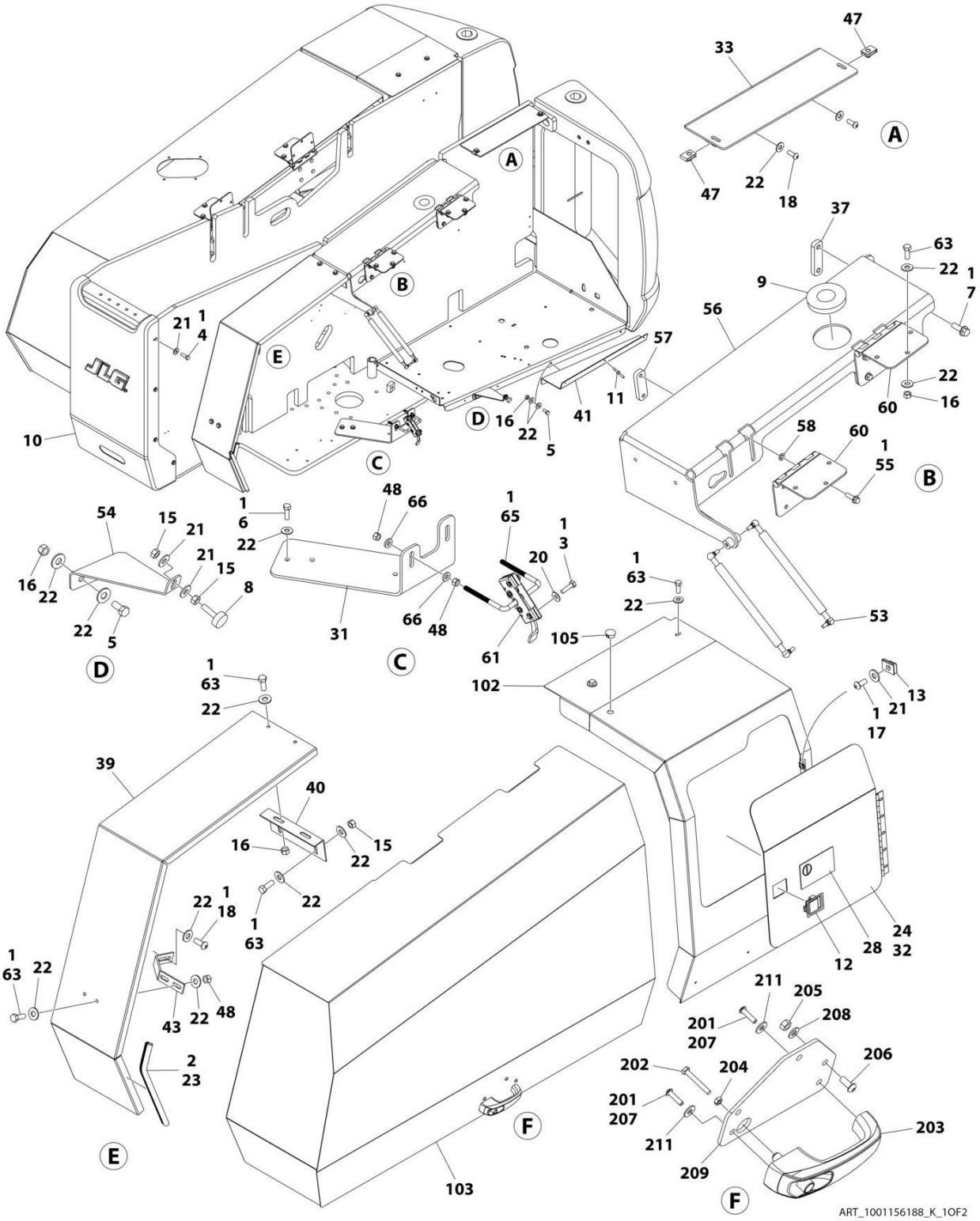

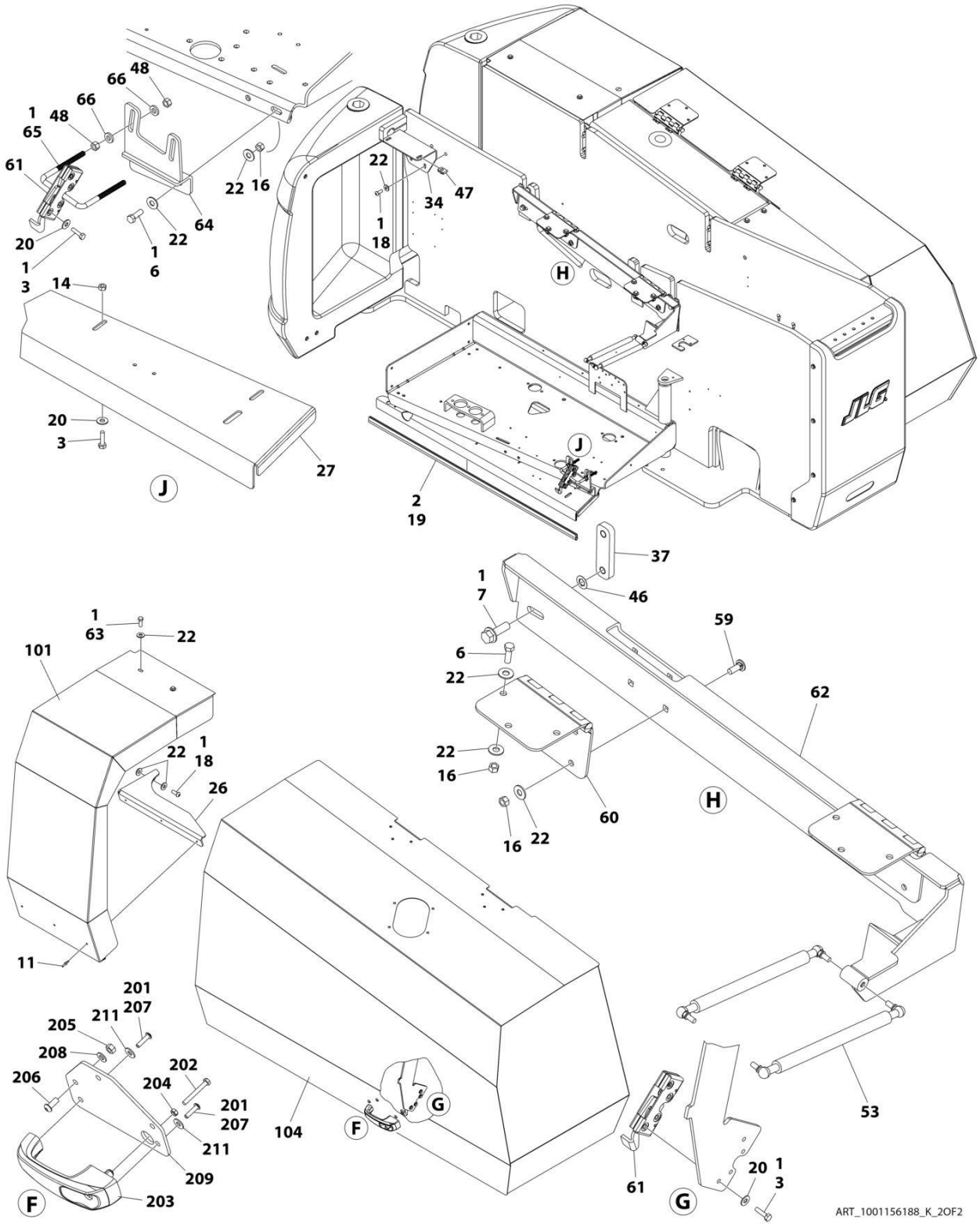
66
48
66
1
48
65
61
22
16
22
34
47
64
22
1
6
20
1
3
14
1
18
H
20
3
27
J
J
2
19
37
1
7
46
59
6
22
62
1
63
22
101
22
1
18
26
22
16
60
H
16
22
11
201
207
211
205
208
206
202
204
201
207
211
209
203
F
104
F
G
61
G
20
1
3
53
ART_1001156188_K_2OF2

FIGURE 2-49. HOODS INSTALLATION - STEEL (DEUTZ D2011 ENGINES)

ITEM	PART NUMBER	QTY	DESCRIPTION	REV
		Ref	NOTE: REPLACEMENT DECALS MUST BE PURCHASED SEPARATELY - SEE DECALS SECTION.	
	1001156188	Ref	HOODS INSTALLATION	K
1	0100011	AR	Compound, Locking	
2	0100081	AR	Adhesive	
3	0641408	12	Bolt 1/4 x 1	
4	0641508	8	Bolt 5/16 x 1	
5	0641607	4	Bolt 3/8 x 7/8	
6	0641609	10	Bolt 3/8 x 1-1/8	
7	0811812	8	Bolt 1/2 x 2-1/4	
8	0940049	1	Stopper, Hood	
9	1120601	1	Plug	
10	1670842	1	Cover, Turntable End	
11	2080040	6	Fastener	
12	2940045	1	Latch, Paddle	
13	3300364	3	Nut, Tinnerman 5/16	
14	3311405	4	Nut 1/4	
15	3311501	2	Nut 5/16	
16	3311605	30	Nut 3/8	
17	3900210	3	Screw 5/16 x 3/4	
18	3900316	7	Screw 3/8 x 1	
19	3960389	4.2 ft /1.3m	Seal	
20	4751400	12	Washer 1/4	
21	4751500	13	Washer 5/16	
22	4751600	69	Washer 3/8	
23	1001110166	59 in/1.5m	Seal	
24	1001113047	6.5 ft/2m	Seal	
26	1001117234	1	Bracket	
27	1001117249	1	Plate	
28	1001117307	1	Decal - Emergency Stop	
31	1001250293	1	Bracket, Striker	
32	1001117598	1	Door	
33	1001158175	1	Bracket, Hood Mounting	
34	1001157867	1	Bracket, Hood Mounting	
37	1001150260	4	Plate, Hinge	
39	1001155899	1	Plate, Spacer	
40	1001157612	1	Bracket, Hood Support	
41	1001157726	1	Bracket, Hood Support	
43	1001158077	1	Bracket, Spacer Panel	
46	2080072	4	Retainer, Bolt	
47	88662523	4	Nut, Tinnerman	
48	3311601	10	Nut 3/8	
53	4160194	4	Spring, Gas	
54	1001161089	1	Bracket, Bumper	
55	0811610	8	Screw 3/8 x 1-1/4	
56	1001155895	1	Mount, Hood	
57	1001186251	4	Plate, Hinge	
58	8310070	8	Nut 3/8	
59	0630485	8	Bolt 3/8 x 1	

ITEM	PART NUMBER	QTY	DESCRIPTION	REV
60	1001186254	4	Hinge	
61	2940173	2	Latch, Rotary	
62	1001196768	1	Mount, Hood	
63	0641608	16	Screw 3/8 x 1	
64	1001250292	1	Bracket	
65	1001243414	2	Bolt 3/8	
66	4891600	8	Washer 3/8	
100	1001174408	1	Kit, Hood (Includes Items 101-104)	
101	1001117219	1	Hood, Fixed Engine Side	
102	1001120962	1	Hood, Fixed Tank Side	
103	1001157209	1	Hood Assembly - Tank Side (Includes Items 201-211)	
104	1001157208	1	Hood Assembly - Engine Side (Includes Items 201-211) (Note: Heat Shield must be transferred from original hood or replaced before putting machine back in service)	
105	3250030	1	Plug	
	1001157208	Ref	HOOD ASSEMBLY - ENGINE SIDE	D
201	0100011	AR	Compound, Locking	
202	0700618	1	Bolt M6 x 50	
203	2560187	1	Handle, Push Button	
204	3290601	1	Nut M6	
205	3311505	3	Nut 5/16	
206	3900210	3	Screw 5/16 x 3/4	
207	3900363	2	Screw M6 x 25	
208	4711500	3	Washer 5/16	
209	1001116290	1	Plate, Latch Mounting	
211	4751400	2	Washer 1/4	

FIGURE 2-50. HOODS INSTALLATION - STEEL (DEUTZ TD2.9L4 ENGINES)

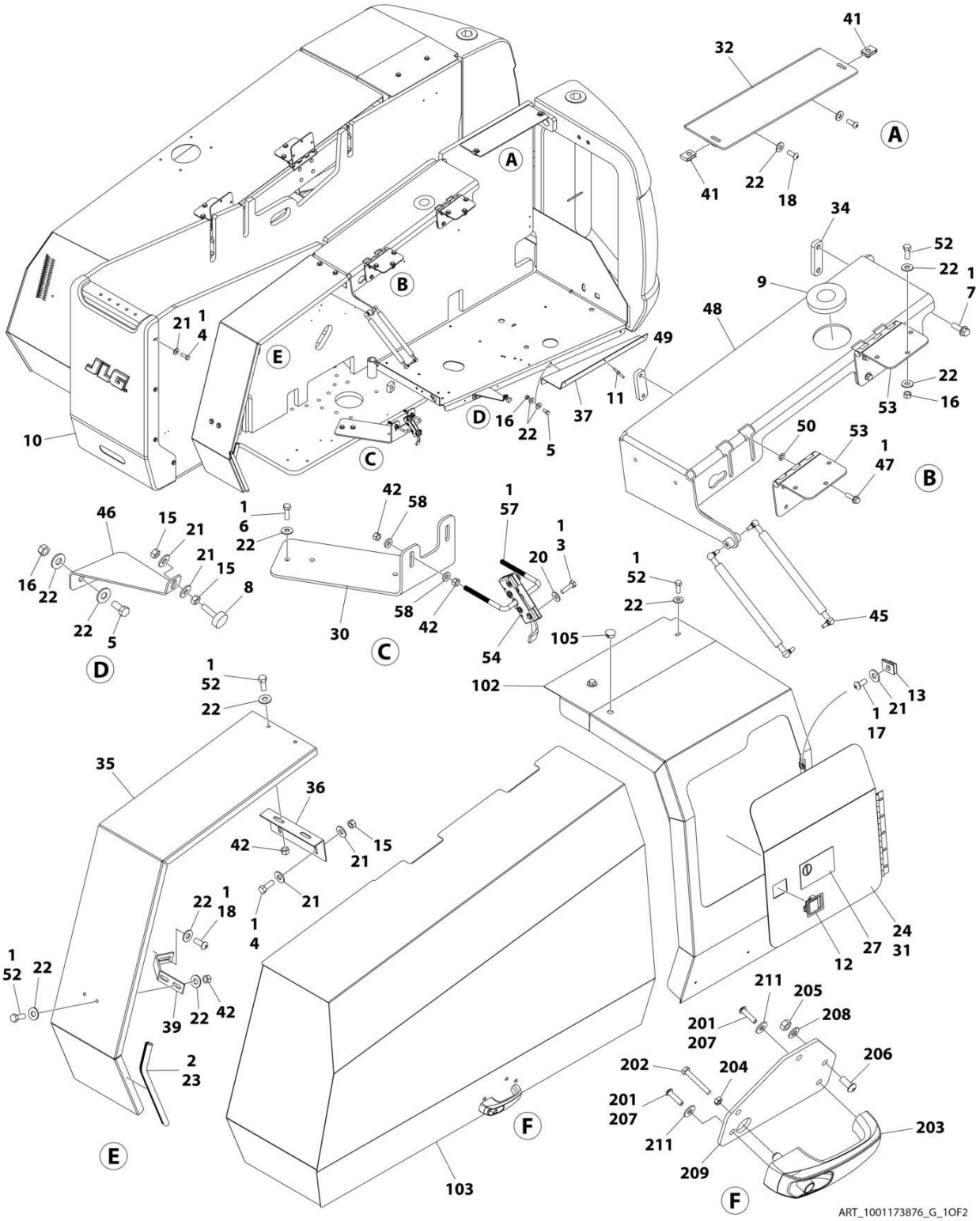

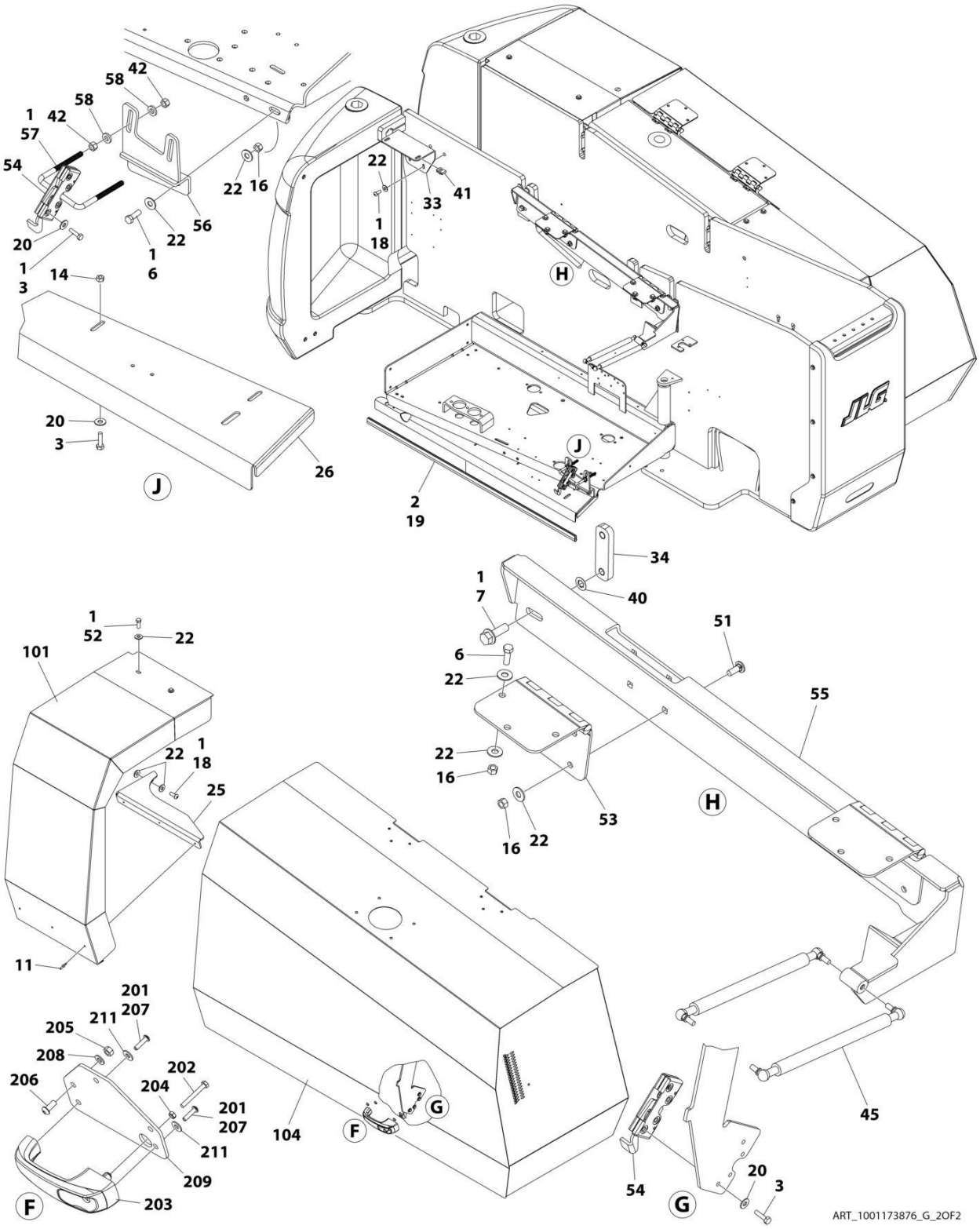
42
58
58
1
42
57
54
22
16
22
33
41
1
18
56
22
1
6
20
1
3
14
H
20
3
J
26
J
2
19
34
1
7
40
51
1
52
22
101
6
22
55
22
1
18
25
22
16
53
H
16
22
11
201
207
211
205
208
206
202
204
201
207
211
104
F
G
209
203
F
54
G
20
3
45
ART_1001173876_G_2OF2

FIGURE 2-50. HOODS INSTALLATION - STEEL (DEUTZ TD2.9L4 ENGINES)

ITEM	PART NUMBER	QTY	DESCRIPTION	REV
		Ref	NOTE: REPLACEMENT DECALS MUST BE PURCHASED SEPARATELY - SEE DECALS SECTION.	
	1001173876	Ref	HOODS INSTALLATION (DEUTZ TD2.9L4 ENGINES MACHINES)	G
1	0100011	AR	Compound, Locking	
2	0100081	AR	Adhesive	
3	0641408	12	Bolt 1/4 x 1	
4	0641508	10	Bolt 5/16 x 1	
5	0641607	2	Bolt 3/8 x 7/8	
6	0641609	10	Bolt 3/8 x 1-1/8	
7	0811812	8	Bolt 1/2 x 2-1/4	
8	0940049	1	Stopper, Hood	
9	1120601	1	Plug	
10	1670842	1	Cover, Turntable End	
11	2080040	6	Fastener	
12	2940045	1	Latch, Paddle	
13	3300364	3	Nut, Tinnerman 5/16	
14	3311405	4	Nut 1/4	
15	3311501	4	Nut 5/16	
16	3311605	24	Nut 3/8	
17	3900210	3	Screw 5/16 x 3/4	
18	3900316	7	Screw 3/8 x 1	
19	3960389	4.2 ft /1.3m	Seal	
20	4751400	12	Washer 1/4	
21	4751500	15	Washer 5/16	
22	4751600	57	Washer 3/8	
23	1001110166	59 in/1.5m	Seal	
24	1001113047	6.5 ft/2m	Seal	
25	1001117234	1	Bracket	
26	1001117249	1	Plate	
27	1001117307	1	Decal - Emergency Stop	
30	1001250293	1	Bracket, Striker	
31	1001117598	1	Door	
32	1001158175	1	Bracket, Hood Mounting	
33	1001157867	1	Bracket, Hood Mounting	
34	1001150260	4	Plate, Hinge	
35	1001155899	1	Plate, Spacer	
36	1001157612	1	Bracket, Hood Support	
37	1001157726	1	Bracket, Hood Support	
39	1001158077	1	Bracket, Spacer Panel	
40	2080072	4	Retainer, Bolt	
41	88662523	4	Nut, Tinnerman	
42	3311601	12	Nut 3/8	
45	4160194	4	Spring, Gas	
46	1001161089	1	Bracket, Bumper	
47	0811610	8	Screw 3/8 x 1-1/4	
48	1001155895	1	Mount, Hood	
49	1001186251	4	Plate, Hinge	
50	8310070	8	Nut 3/8	
51	0630485	8	Bolt 3/8 x 1	

ITEM	PART NUMBER	QTY	DESCRIPTION	REV
52	0641608	14	Bolt 3/8 x 1	
53	1001186254	4	Hinge	
54	2940173	2	Latch, Rotary	
55	1001196768	1	Mount, Hood	
56	1001250292	1	Bracket	
57	1001243414	2	Bolt 3/8	
58	4891600	8	Washer 3/8	
100	1001174277	1	Kit, Hood (Includes Items 101-104)	
101	1001117219	1	Hood, Fixed Engine Side	
102	1001120962	1	Hood, Fixed Tank Side	
103	1001157209	1	Hood Assembly - Tank Side (Includes Items 201-211)	
104	1001162915	1	Hood Assembly - Engine Side (Includes Items 201-211) (Note: Heat Shield must be transferred from original hood or replaced before putting machine back in service)	
105	3250030	1	Plug	
	1001162915	Ref	HOOD ASSEMBLY - ENGINE SIDE	C
201	0100011	AR	Compound, Locking	
202	0700618	1	Bolt M6 x 50	
203	2560187	1	Handle, Push Button	
204	3290601	1	Nut M6	
205	3311505	3	Nut 5/16	
206	3900210	3	Screw 5/16 x 3/4	
207	3900363	2	Screw M6 x 25	
208	4711500	3	Washer 5/16	
209	1001116290	1	Plate, Latch Mounting	
211	4751400	2	Washer 1/4	

FIGURE 2-51. HOODS INSTALLATION - STEEL (FORD ENGINES)

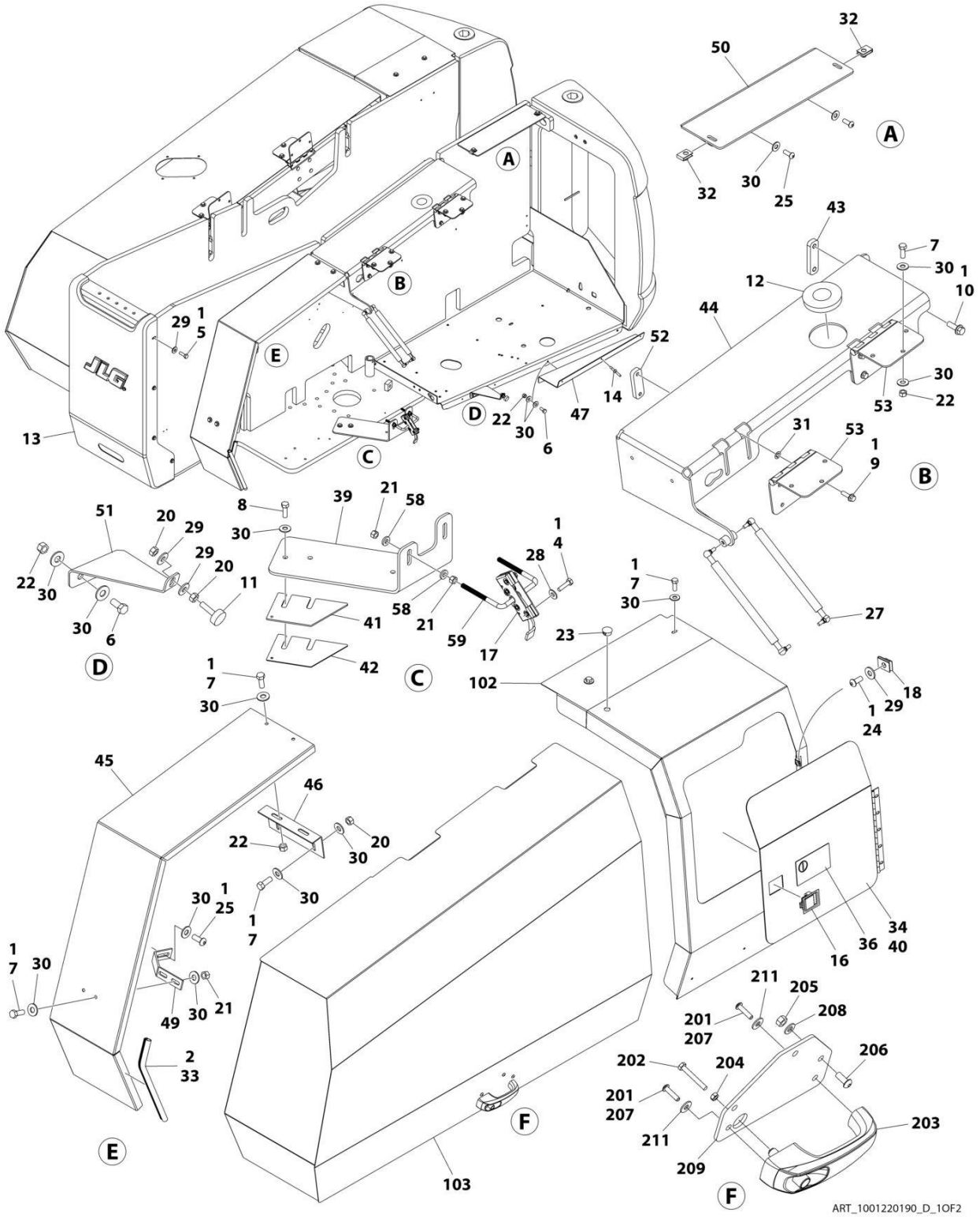

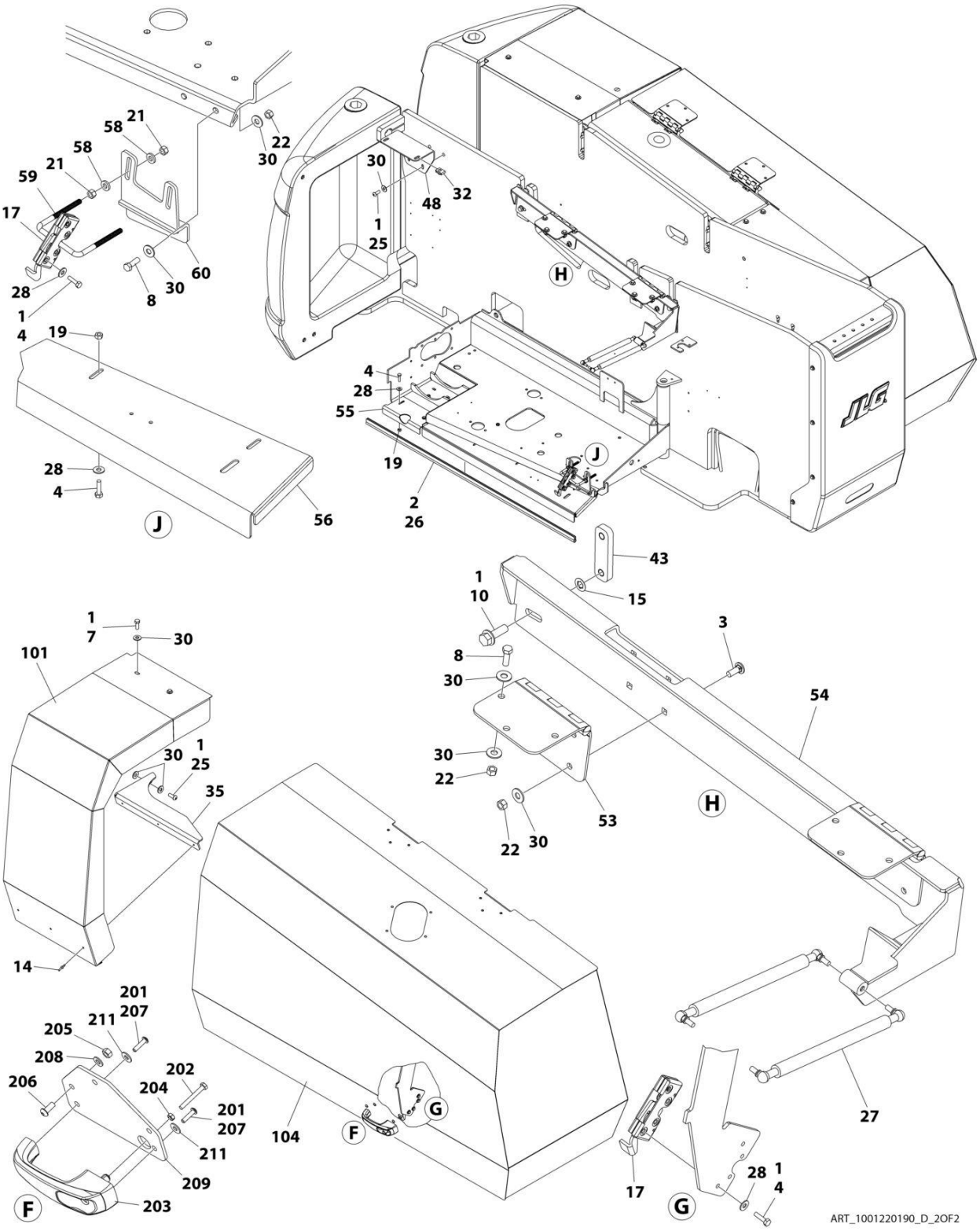
21
58
58
21
59
17
28
1
4
19
30
22
30
32
48
1
25
60
30
8
H
4
28
55
19
J
2
26
56
28
4
J
43
1
10
15
3
54
8
30
30
22
53
22
30
H
1
7
30
101
30
1
25
35
14
201
207
211
205
208
206
202
204
201
207
211
209
203
F
104
F
G
17
G
28
1
4
27
ART_1001220190_D_2OF2

FIGURE 2-51. HOODS INSTALLATION - STEEL (FORD ENGINES)

ITEM	PART NUMBER	QTY	DESCRIPTION	REV
		Ref	NOTE: REPLACEMENT DECALS MUST BE PURCHASED SEPARATELY - SEE DECALS SECTION.	
	1001220190	Ref	HOODS INSTALLATION (FORD ENGINES MACHINES)	D
1	0100011	AR	Compound, Locking	
2	0100081	AR	Adhesive	
3	0630485	8	Bolt 3/8 x 1	
4	0641408	13	Bolt 1/4 x 1	
5	0641508	8	Bolt 5/16 x 1	
6	0641607	4	Bolt 3/8 x 7/8	
7	0641608	16	Bolt 3/8 x 1	
8	0641609	12	Bolt 3/8 x 1-1/8	
9	0811610	8	Screw 3/8 x 1-1/4	
10	0811812	8	Bolt 1/2 x 2-1/4	
11	0940049	1	Stopper, Hood	
12	1120601	1	Plug	
13	1670842	1	Cover, Turntable End	
14	2080040	6	Fastener	
15	2080072	4	Retainer, Bolt	
16	2940045	1	Latch, Paddle	
17	2940173	2	Latch, Rotary	
18	3300364	3	Nut, Tinnerman 5/16	
19	3311405	5	Nut 1/4	
20	3311501	2	Nut 5/16	
21	3311601	10	Nut 3/8	
22	3311605	30	Nut 3/8	
23	3520030	1	Plug	
24	3900210	3	Screw 5/16 x 3/4i	
25	3900316	7	Screw 3/8 x 1	
26	3960389	4.2 ft /1.3m	Seal	
27	4160194	4	Spring, Gas	
28	4751400	13	Washer 1/4	
29	4751500	13	Washer 5/16	
30	4751600	69	Washer 3/8	
31	8310070	8	Nut 3/8	
32	88662523	4	Nut, Tinnerman	
33	1001110166	59 in/1.5m	Seal	
34	1001113047	6.5 ft/2m	Seal	
35	1001117234	1	Bracket	
36	1001117307	1	Decal - Emergency Stop	
39	1001250293	1	Bracket, Striker	
40	1001117598	1	Door	
41	1001121122	AR	Shim 3	
42	1001121123	AR	Shim 1.5	
43	1001150260	4	Plate, Hinge	
44	1001155895	1	Mount, Hood	
45	1001155899	1	Plate, Spacer	
46	1001157612	1	Bracket, Hood Support	
47	1001157726	1	Bracket, Hood Support	
48	1001157867	1	Bracket, Hood Mounting	

ITEM	PART NUMBER	QTY	DESCRIPTION	REV
49	1001158077	1	Bracket, Spacer Panel	
50	1001158175	1	Bracket, Hood Mounting	
51	1001161089	1	Bracket, Bumper	
52	1001186251	4	Plate, Hinge	
53	1001186254	4	Hinge	
54	1001196768	1	Mount, Hood	
55	1001220002	1	Plate	
56	1001220067	1	Plate	
58	4891600	4	Washer 3/8	
59	1001243414	2	Bolt 3/8	
60	1001250292	1	Bracket	
100	1001174408	1	Kit, Hood (Includes Items 101-104)	
101	1001117219	1	Hood, Fixed Engine Side	
102	1001120962	1	Hood, Fixed Tank Side	
103	1001157209	1	Hood Assembly - Tank Side (Includes Items 201-211)	
104	1001157208	1	Hood Assembly - Engine Side (Includes Items 201-211) (Note: Heat Shield item 309 must be transferred from original hood or replaced before putting machine back in service)	
	1001157208	Ref	HOOD ASSEMBLY- ENGINE SIDE	D
201	0100011	AR	Compound, Locking	
202	0700618	1	Bolt M6 x 50	
203	2560187	1	Handle, Push Button	
204	3290601	1	Nut M6	
205	3311505	3	Nut 5/16	
206	3900210	3	Screw 5/16 x 3/4	
207	3900363	2	Screw M6 x 25	
208	4711500	3	Washer 5/16	
209	1001116290	1	Plate, Latch Mounting	
211	4751400	2	Washer 1/4	

FIGURE 2-52. EXHAUST COVER AND HEAT SHIELDS INSTALLATION - STEEL HOODS (DEUTZ D2011 ENGINES)

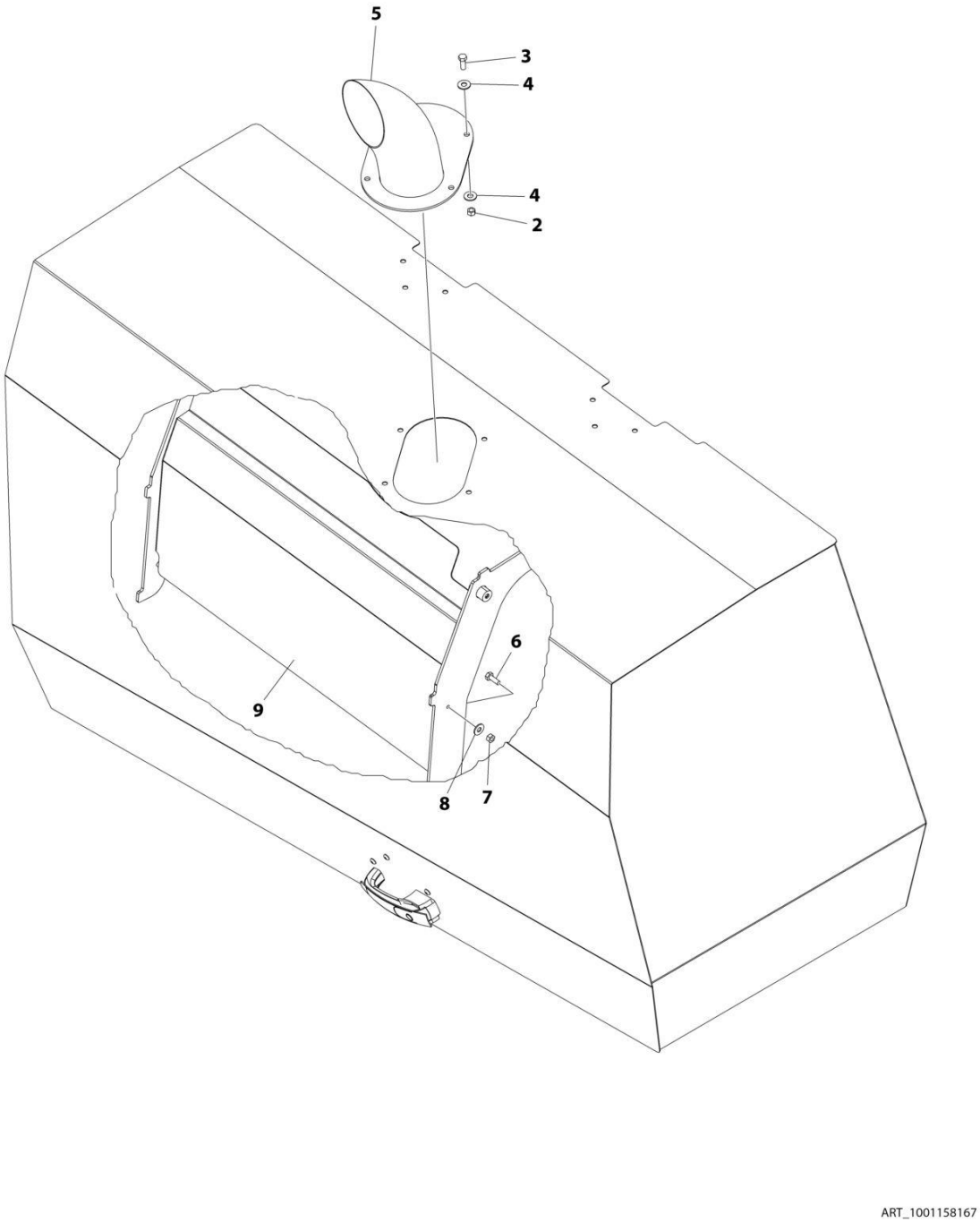

FIGURE 2-52. EXHAUST COVER AND HEAT SHIELDS INSTALLATION - STEEL HOODS (DEUTZ D2011 ENGINES)

ITEM	PART NUMBER	QTY	DESCRIPTION	REV
	1001158167	Ref	HOODS INSTALLATION	E
2	3311605	4	Nut 3/8	
3	0641608	4	Bolt 3/8 x 1	
4	4751600	8	Washer 3/8	
5	1001116456	1	Pipe, Exhaust	
6	0641406	3	Bolt 1/4 x 3/4	
7	3311405	3	Nut 1/4	
8	4751400	3	Washer 1/4	
9	1001150561	1	Shield, Heat	

FIGURE 2-53. EXHAUST COVER AND HEAT SHIELDS INSTALLATION - STEEL HOODS (DEUTZ TD2.9L4 ENGINES)

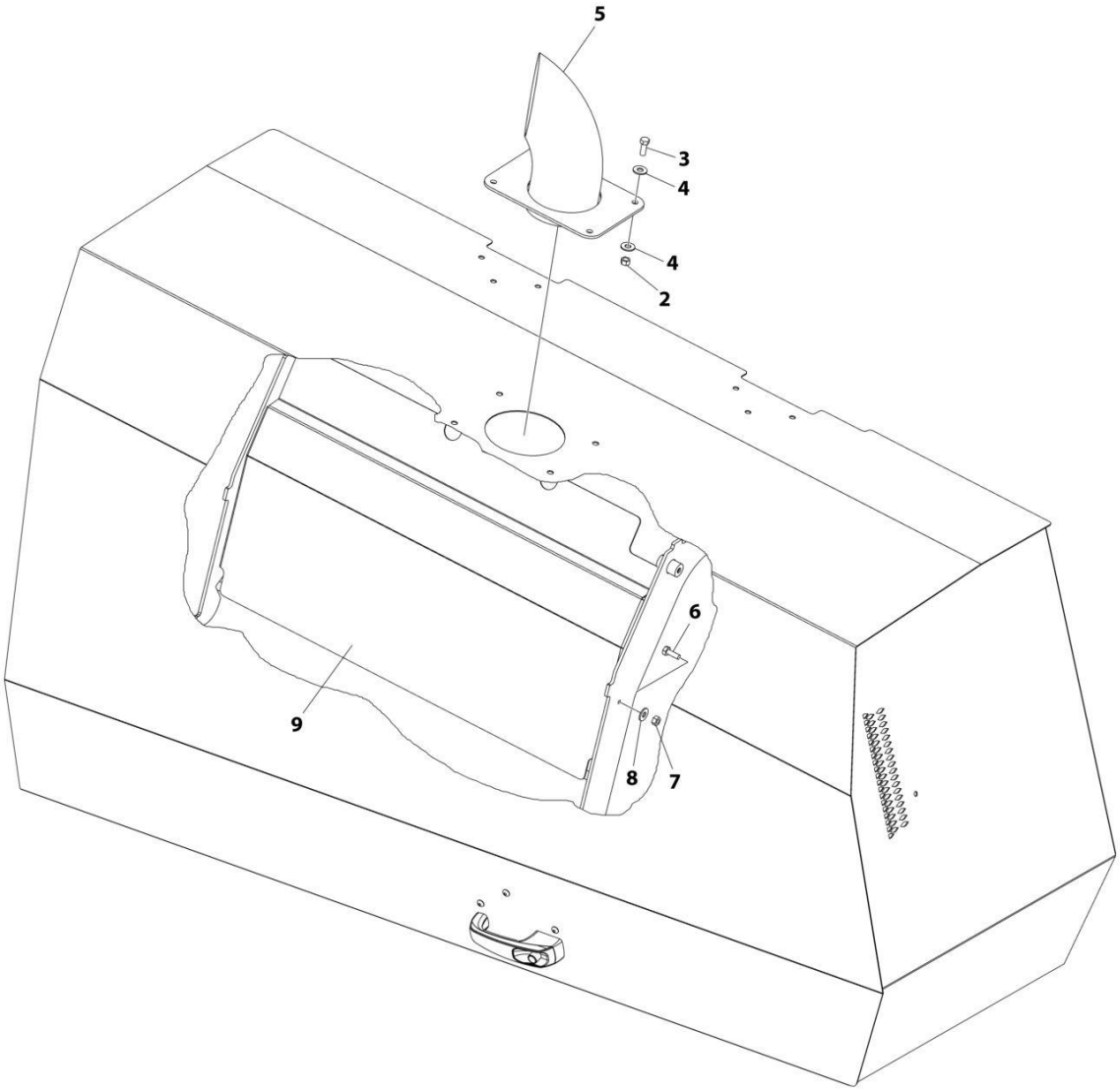

FIGURE 2-53. EXHAUST COVER AND HEAT SHIELDS INSTALLATION - STEEL HOODS (DEUTZ TD2.9L4 ENGINES)

ITEM	PART NUMBER	QTY	DESCRIPTION	REV
	1001173878	Ref	HOODS INSTALLATION	C
2	3311605	4	Nut 3/8	
3	0641608	4	Bolt 3/8 x 1	
4	4751600	8	Washer 3/8	
5	1001144527	1	Pipe, Exhaust	
6	0641406	3	Bolt 1/4 x 3/4	
7	3311405	3	Nut 1/4	
8	4751400	3	Washer 1/4	
9	1001163101	1	Shield, Heat	

FIGURE 2-54. EXHAUST COVER INSTALLATION - STEEL HOODS (FORD ENGINES)

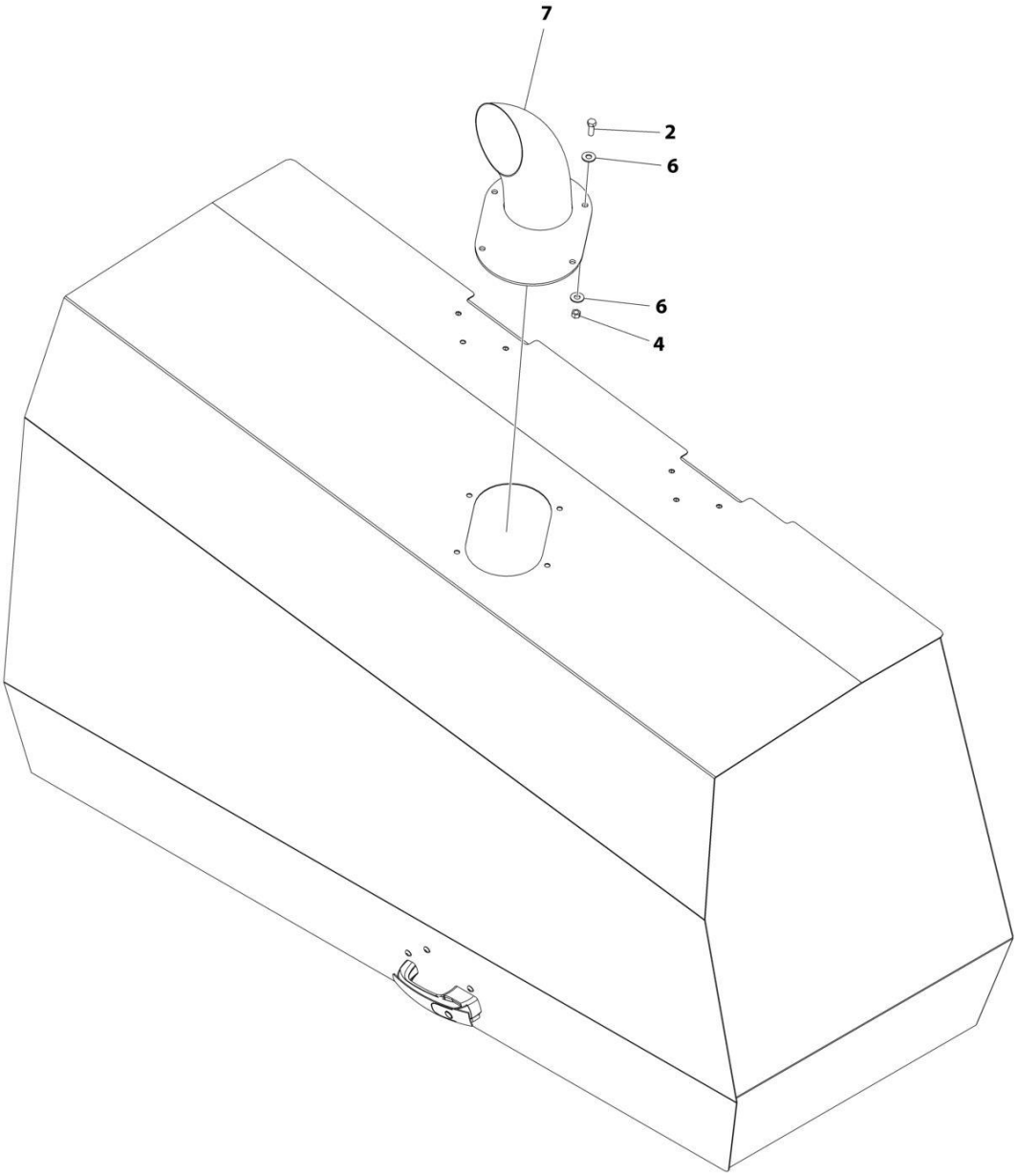

ART_1001220189

FIGURE 2-54. EXHAUST COVER INSTALLATION - STEEL HOODS (FORD ENGINES)

ITEM	PART NUMBER	QTY	DESCRIPTION	REV
	1001220189	Ref	HOODS INSTALLATION	C
2	0641608	4	Bolt 3/8 x 1	
4	3311605	4	Nut 3/8	
6	4751600	8	Washer 3/8	
7	1001116457	1	Pipe, Exhaust	

FIGURE 2-55. SKYAIR AIR COMPRESSOR INSTALLATION

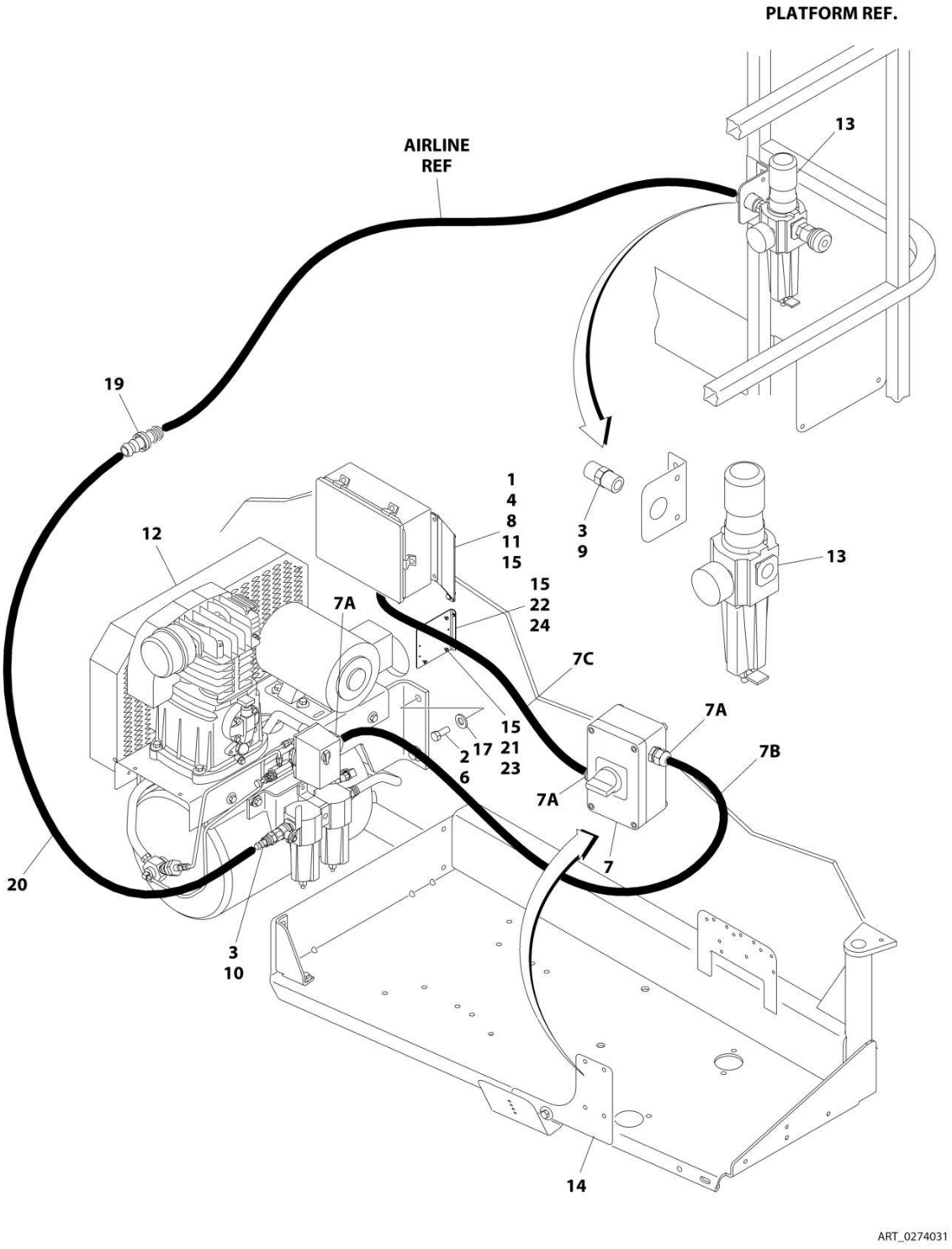

FIGURE 2-55. SKYAIR AIR COMPRESSOR INSTALLATION

ITEM	PART NUMBER	QTY	DESCRIPTION	REV
	0274031	Ref	SKYAIR AIR COMPRESSOR INSTALLATION	D
1	0100011	AR	Compound, Locking	
2	0100019	AR	Compound, Locking	
3	0100020	3	Sealant	
4	0641405	4	Bolt 1/4 x 5/8	
6	0641810	4	Bolt 1/2 x 1-1/4	
7	0861642	1	Control Box Assembly	
7A	4460633	3	Connector, Strain Relief	
7B	70002948	AR	Cable, Electrical - 12/4 (13ft/4m)	
7C	70002948	AR	Cable, Electrical - 12/4 (30in/76cm)	
8	0903088	2	Bracket, Generator Box	
9	2220252	1	Fitting, Adapter NPT	
10	2220750	1	Fitting	
11	3300454	4	Nut, Tinnerman 1/4	
12	3600386	1	Air Compressor Assembly (See Separate Breakdown in this section)	
13	3720021	1	Filter/Regulator Assembly	
13	7027781	1	Service Kit (Includes Gaskets and Seals)	
13	7027782	1	Filter	
13	7027784	1	Gauge	
13	7027783	1	Valve, Drain	
14	4340747	1	Bracket, Control Box	
15	4711400	14	Washer 1/4	
17	4751800	4	Washer 1/2	
19	2221037	1	Fitting, Barbed	
20	2720545	1	Hose, Air	
21	0641409	4	Bolt 1/4 x 1-1/8	
22	0641410	2	Bolt 1/4 x 1-1/4	
23	3311405	4	Nut 1/4	
24	3575874	1	Bracket, Module	
25	4460428	1	Connector	

FIGURE 2-56. SKYAIR AIR COMPRESSOR INSTALLATION

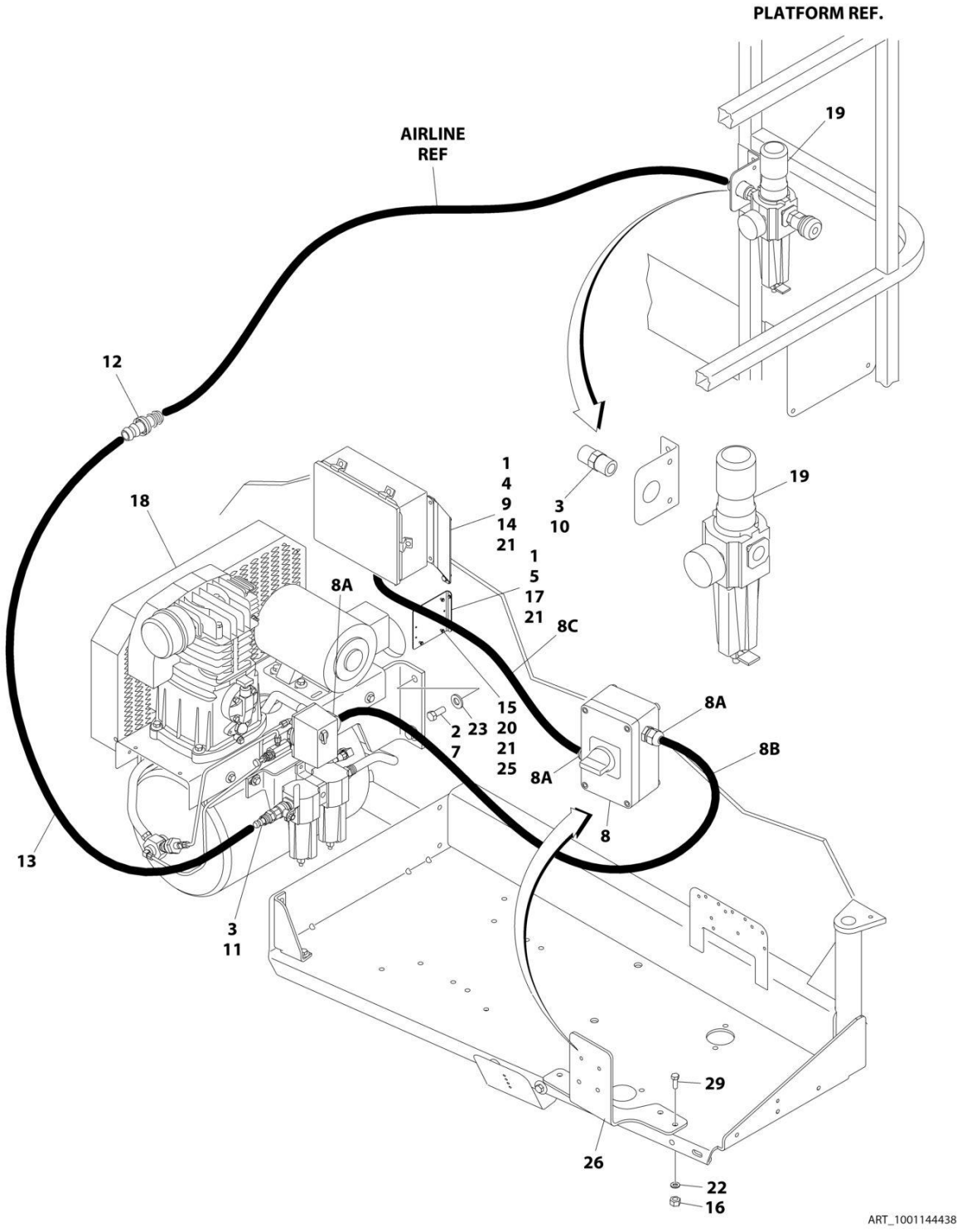

FIGURE 2-56. SKYAIR AIR COMPRESSOR INSTALLATION

ITEM	PART NUMBER	QTY	DESCRIPTION	REV
	1001144438	Ref	SKYAIR AIR COMPRESSOR INSTALLATION	B
1	0100011	AR	Compound, Locking	
2	0100019	AR	Compound, Locking	
3	0100020	AR	Sealant	
4	0641405	4	Bolt 1/4 x 5/8	
5	0641410	2	Bolt 1/4 x 1-1/4	
7	0641810	4	Bolt 1/2 x 1-1/4	
8	0861642	1	Control Box Assembly	
8A	4460633	3	Connector, Strain Relief	
8B	70002948	AR	Cable, Electrical - 12/4 (13ft/4m)	
8C	70002948	AR	Cable, Electrical - 12/4 (30in/76cm)	
9	0903088	2	Bracket, Generator Box	
10	2220252	1	Fitting, Adapter NPT	
11	2220750	1	Fitting	
12	2221037	1	Fitting, Barbed	
13	2720545	1	Hose, Air	
14	3300454	4	Nut, Tinnerman 1/4	
15	3311405	4	Nut 1/4	
16	3311605	3	Nut 3/8	
17	3575874	1	Bracket, Module	
18	3600386	1	Air Compressor Assembly (See Separate Breakdown in tihs Section)	
19	3720021	1	Filter/Regulator Assembly	
19	7027781	1	Service Kit (Includes Gaskets and Seals)	
19	7027782	1	Filter	
19	7027784	1	Gauge	
19	7027783	1	Valve, Drain	
20	3931424	4	Capscrew 1/4 x 1-1/2	
21	4711400	14	Washer 1/4	
22	4711600	4	Washer 3/8	
23	4751800	4	Washer 1/2	
25	1001110425	4	Spacer	
26	1001144447	1	Bracket, Control Box	
27	0641606	1	Bolt 3/8 x 3/4 (Not Shown)	
28	8406201	1	Clip (Not Shown)	
29	0641609	3	Bolt 3/8 X 1-1/8	

FIGURE 2-57. AIR COMPRESSOR ASSEMBLY

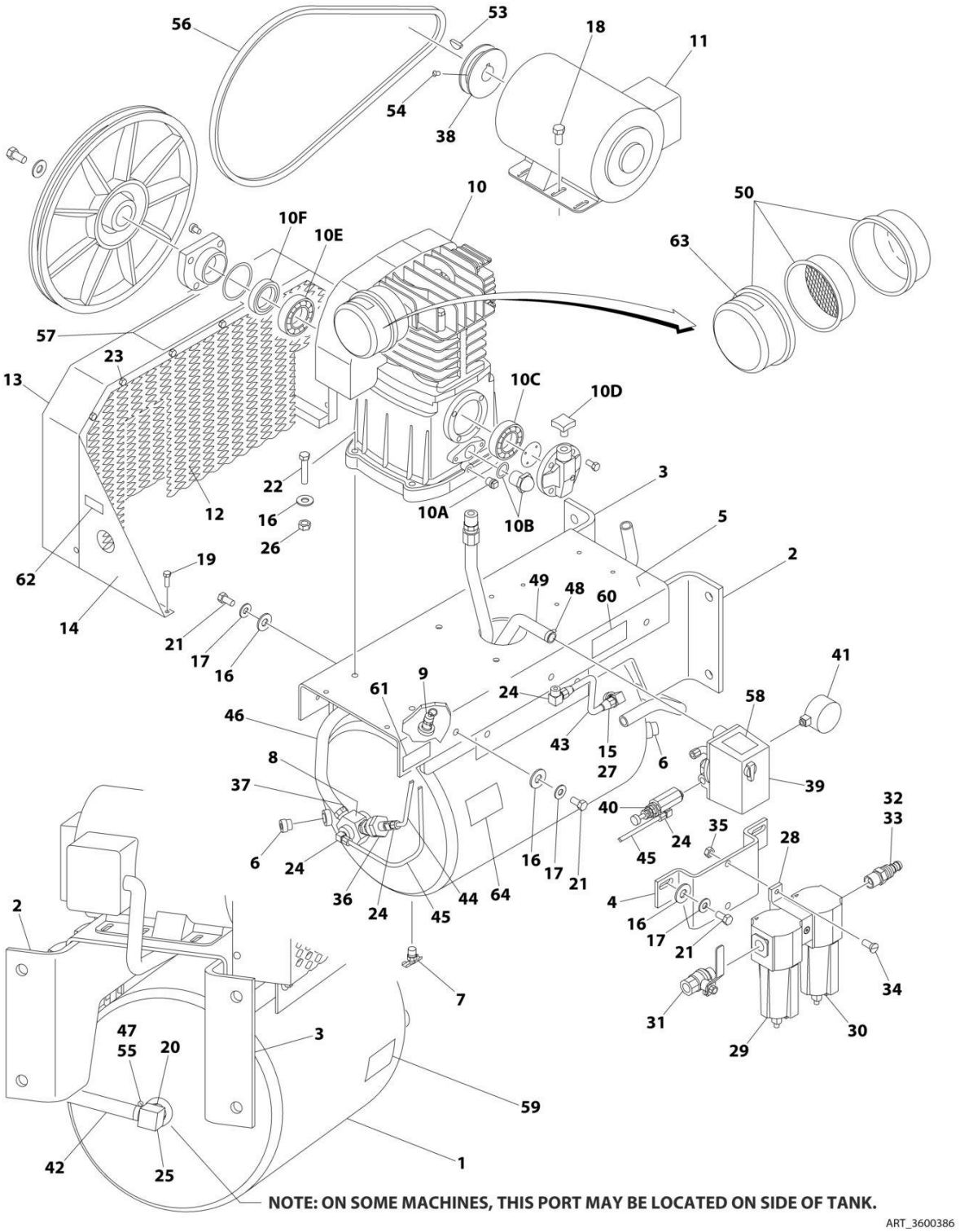

FIGURE 2-57. AIR COMPRESSOR ASSEMBLY

ITEM	PART NUMBER	QTY	DESCRIPTION	REV
	3600386	Ref	AIR COMPRESSOR ASSEMBLY	B
1	7026632	1	Tank	
2	See Note	1	Bracket, Mounting (Note: Not Available for Purchase)	
3	See Note	1	Bracket, Mounting (Note: Not Available for Purchase)	
4	See Note	1	Bracket, Regulator Mounting (Note: Not Available for Purchase)	
5	See Note	1	Deck (Note: Not Available for Purchase)	
6	See Note	2	Plug (Note: Not Available for Purchase)	
7	7026633	1	Valve, Drain	
8	7026634	1	Valve, Check	
9	7026635	1	Valve, Safety	
10	7026636	1	Pump Assembly	
10	7026659	1	Gasket and Seal Kit	
10A	7026651	1	Plug, Oil Drain	
10B	7026652	1	Gauge, Oil Sight	
10C	7026653	1	Bearing	
10D	7026654	1	Cap, Oil Fill	
10E	7026655	1	Bearing	
10F	7026656	1	Seal	
11	7026637	1	Motor Assembly	
11	See Note	1	Brush Kit (Note: Not Available for Purchase)	
12	See Note	1	Screen, Inner (Note: Not Available for Purchase)	
13	See Note	1	Guard, Belt (Note: Not Available for Purchase)	
14	See Note	2	Support (Note: Not Available for Purchase)	
15	See Note	1	Bushing (Note: Not Available for Purchase)	
16	4751600	18	Washer 3/8	
17	4761600	10	Washer 3/8	
18	0641506	4	Bolt 5/16 x 3/4	
19	0641406	8	Bolt 1/4 x 3/4	
20	See Note	1	Bushing (Note: Not Available for Purchase)	
21	0641610	10	Bolt 3/8 x 1-1/4	
22	0641616	4	Bolt 3/8 x 2	
23	See Note	10	Bolt 1/4 x 1/2 (Note: Not Available for Purchase)	
24	See Note	4	Fitting (Note: Not Available for Purchase)	
25	See Note	1	Fitting, Barbed (Note: Not Available for Purchase)	
26	3311605	4	Nut 3/8	
27	See Note	1	Fitting, Compression (Note: Not Available for Purchase)	
28	See Note	1	Bracket, Mounting (Note: Not Available for Purchase)	
29	7026660	1	Filter, Oil Removal	
30	7026661	1	Filter, Water Removal	
31	70001663	1	Valve, Ball Shut-Off	
32	See Note	1	Bushing (Note: Not Available for Purchase)	
33	See Note	1	Fitting, Barbed (Note: Not Available for Purchase)	
34	See Note	2	Screw 1/4 x 1 (Note: Not Available for Purchase)	
35	3311405	2	Nut 1/4	
36	See Note	1	Unloader (Note: Not Available for Purchase)	
37	See Note	1	Fitting (Note: Not Available for Purchase)	
38	See Note	1	Pulley (Note: Not Available for Purchase)	
39	7026638	1	Switch, Pressure	
40	7026639	1	Vale, Pilot	
41	7026640	1	Gauge	

ITEM	PART NUMBER	QTY	DESCRIPTION	REV
42	See Note	1	Hose (Note: Not Available for Purchase)	
43	See Note	1	Tube, Feed (Note: Not Available for Purchase)	
44	See Note	1	Tube (Note: Not Available for Purchase)	
45	See Note	1	Tube (Note: Not Available for Purchase)	
46	See Note	1	Aftercooler (Note: Not Available for Purchase)	
47	See Note	2	Clamp (Note: Not Available for Purchase)	
48	See Note	2	Clamp (Note: Not Available for Purchase)	
49	See Note	1	Harness, Wiring (Note: Not Available for Purchase)	
50	7026658	1	Filter Assembly	
50	7026641	1	Element, Filter	
51	See Note	23 oz	Oil, Compressor (Note: Not Available for Purchase)	
52	0100020	AR	Sealant	
53	See Note	1	Key (Note: Not Available for Purchase)	
54	See Note	2	Setscrew (Note: Not Available for Purchase)	
55	See Note	2	Cover, Clamp End (Note: Not Available for Purchase)	
56	7026642	1	Belt	
57	7026643	1	Decal - Unit Warning	
58	7026644	1	Decal - Pressure Switch Warning	
59	7026645	1	Decal - Drain Tank Warning	
60	7026646	1	Decal - Compressor Maintenance	
61	7026647	1	Decal - Initial Oil Fill	
62	7026648	1	Decal - Hot Surfaces Warning	
63	7026649	1	Decal - Paper Element Cleaning	
64	7026650	1	Decal - Dual Control	

SECTION 3 - ENGINE

FIGURE 3-1. DEUTZ D2011 ENGINE INSTALLATION (WITHOUT ARCTIC PACKAGE)

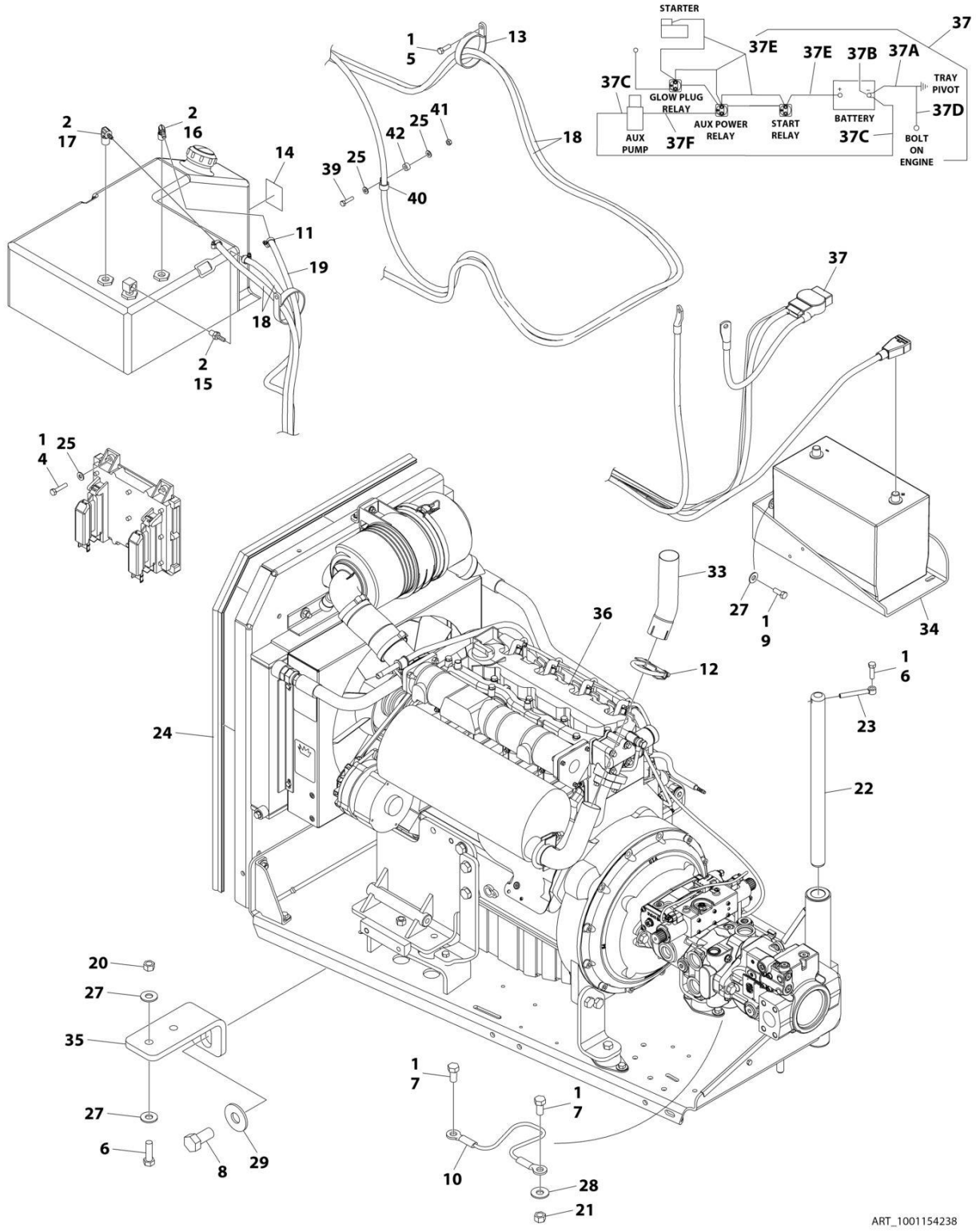

FIGURE 3-1. DEUTZ D2011 ENGINE INSTALLATION (WITHOUT ARCTIC PACKAGE)

ITEM	PART NUMBER	QTY	DESCRIPTION	REV
	1001154238	Ref	DEUTZ D2011 ENGINE INSTALLATION (WITHOUT ARCTIC PACKAGE)	F
1	0100011	AR	Compound, Locking	
2	0100020	AR	Sealant, Pipe	
4	0641410	4	Bolt 1/4 x 1-1/4	
5	0641508	1	Bolt 5/16 x 1	
6	0641610	3	Bolt 3/8 x 1-1/4	
7	0641808	2	Bolt 1/2 x 1	
8	0642010	1	Bolt 5/8 x 1-1/4	
9	0681608	3	Bolt 3/8 x 1 Grade 8	
10	1060637	1	Cable, Lanyard	
11	1320022	5	Clamp, Hose	
12	1320176	1	Clamp	
13	1321339	1	Clamp	
14	1701505	1	Decal - Diesel (Not Shown - Located on Hood)	
15	2180348	1	Fitting, Straight NPT/Barbed	
16	2220313	1	Fitting, 90 NPT/Barbed	
17	2221176	1	Fitting, 90 NPT/Barbed	
18	2720058	30 ft/ 9m	Hose	
19	2750532	6 ft/ 1.8m	Hose	
20	3311605	2	Nut 3/8	
21	3311801	1	Nut 1/2	
22	3422446	1	Pin, Pivot	
23	3841143	1	Pin, Keeper	
24	3960389	5 ft/ 1.5m	Seal	
25	4711400	6	Washer 1/4	
27	4751600	7	Washer 3/8	
28	4751800	1	Washer 1/2	
29	4752000	1	Washer 5/8	
33	1001101600	1	Tube, Exhaust	
34	1001162497	1	Bracket	
35	1001151070	1	Plate	
36	1001154236	1	Engine and Pump Assembly without Arctic Package (See Separate Breakdown in this Section)	
37	1001155143	1	Kit, Battery Cable	
37A	7027092	1	Cable, Battery (Black) (Battery - to Tray Pivot and Relay Grd)	
37B	8270147	1	Terminal, Battery (With Boot) Cable, Battery (Black)	
37C	7027093	1	Cable, Battery (Black) (Battery - to Aux Pump Ground)	
37D	7027053	1	Cable, Battery (Black) (Engine to Tray Pivot Grd)	
37E	7027094	1	Cable (Red) (Battery + to Relays/Starter)	
37F	7027095	1	Cable (Red) (Aux Relay to Aux Pump)	
39	0641409	1	Bolt 1/4 x 1-1/8	
40	1320224	1	Clamp	
41	3311405	1	Nut 1/4	
42	1001110425	1	Spacer	

FIGURE 3-2. DEUTZ D2011 ENGINE INSTALLATION (WITH ARCTIC PACKAGE)

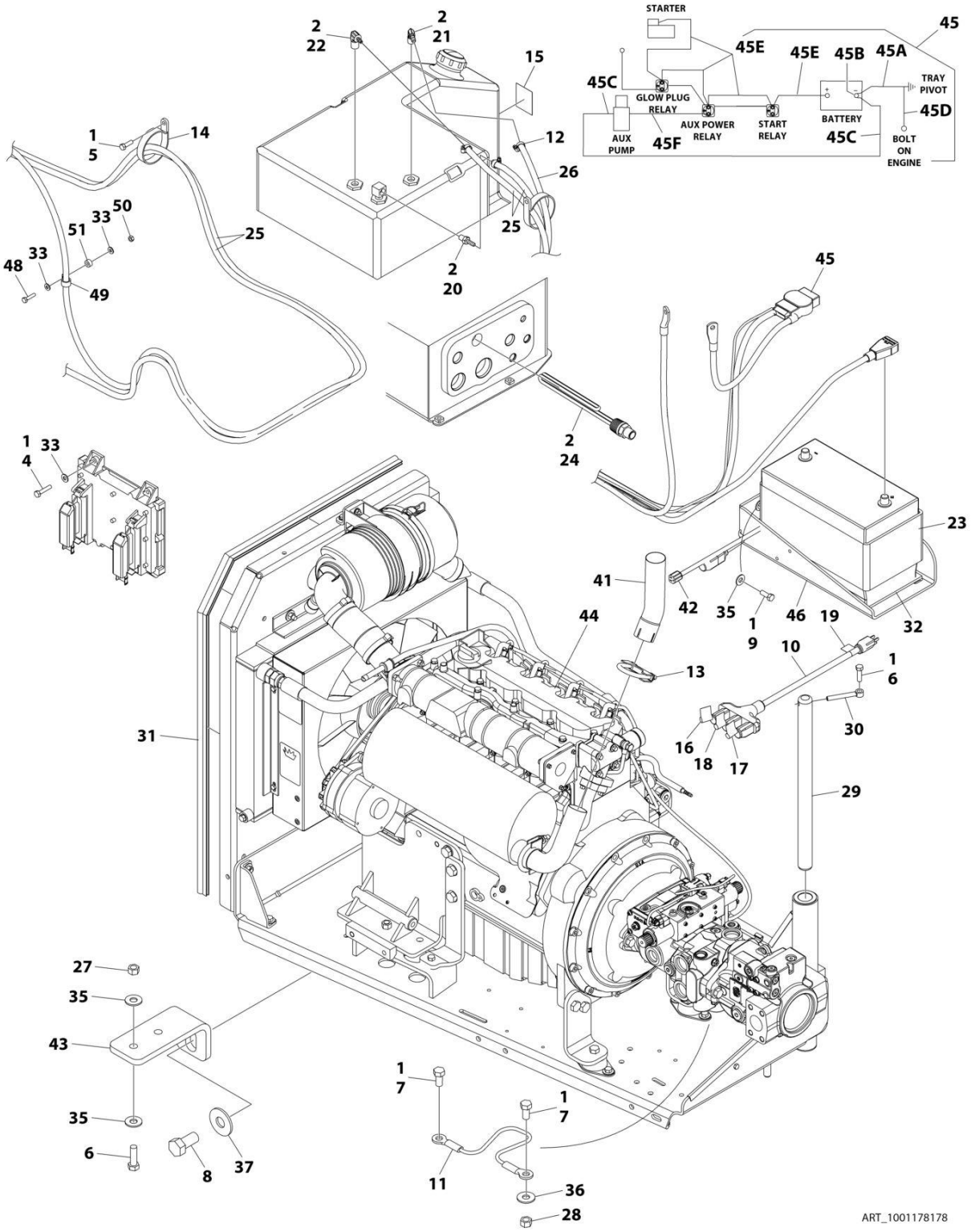

FIGURE 3-2. DEUTZ D2011 ENGINE INSTALLATION (WITH ARCTIC PACKAGE)

ITEM	PART NUMBER	QTY	DESCRIPTION	REV
	1001178178	Ref	DEUTZ D2011 ENGINE INSTALLATION (WITH ARCTIC PACKAGE)	E
1	0100011	AR	Compound, Locking	
2	0100020	AR	Sealant, Pipe	
4	0641410	4	Bolt 1/4 x 1-1/4	
5	0641508	1	Bolt 5/16 x 1	
6	0641610	3	Bolt 3/8 x 1-1/4	
7	0641808	2	Bolt 1/2 x 1	
8	0642010	1	Bolt 5/8 x 1-1/4	
9	0681608	3	Bolt 3/8 x 1 Grade 8	
10	1060626	1	Cord, 3 Way Extension (Located on Left Front of Engine)	
11	1060637	1	Lanyard	
12	1320022	5	Clamp	
13	1320176	1	Clamp	
14	1321339	1	Clamp	
15	1701505	1	Decal - Fuel (Diesel)	
16	1702941	1	Decal - Battery Heater (Located on Battery Heater)	
17	1702942	1	Decal - Engine Block Heater (Located on Right Side of Engine)	
18	1702943	1	Decal - Hydraulic Tank Heater (Located on bottom of Hydraulic Oil Tank)	
19	1702944	1	Decal - Heater Cord (Located on Left Front of Engine)	
20	2180348	1	Fitting, Straight Barbed	
21	2220313	1	Fitting, 90 NPT/Barbed	
22	2221176	1	Fitting, 90 NPT/Barbed	
23	2580024	1	Heater, Battery (Located on Battery)	
24	1001188972	1	Heater, Hydraulic Tank (Located on bottom of Hydraulic Oil Tank)	
25	2720058	30 ft/ 9m	Hose	
26	2750532	6 ft/ 1.8m	Hose	
27	3311605	2	Nut 3/8	
28	3311801	1	Nut 1/2	
29	3422446	1	Pin, Pivot	
30	3841143	1	Pin, Keeper	
31	3960389	5 ft/ 1.5m	Seal	
32	3980007	1	Seat, Battery	
33	4711400	6	Washer 1/4	
35	4751600	7	Washer 3/8	
36	4751800	1	Washer 1/2	
37	4752000	1	Washer 5/8	
41	1001101600	1	Tube, Exhaust	
42	1001150918	1	Cord, 8ft Extension (Located near Battery)	
43	1001151070	1	Plate	
44	1001154237	1	Engine and Pump Assembly with Arctic Package (See Separate Breakdown in this Section)	
45	1001155143	1	Kit, Battery Cable	
45	7027092	1	Cable, Battery (Black) (Battery - to Tray Pivot and Relay Grd)	
45	8270147	1	Terminal, Battery (With Boot) Cable, Battery (Black)	
45	7027093	1	Cable, Battery (Black) (Battery - to Aux Pump Ground)	
45	7027053	1	Cable, Battery (Black) (Engine to Tray Pivot Grd)	
45	7027094	1	Cable (Red) (Battery + to Relays/Starter)	
45	7027095	1	Cable (Red) (Aux Relay to Aux Pump)	

ITEM	PART NUMBER	QTY	DESCRIPTION	REV
46	1001162497	1	Bracket, Battery	
48	0641409	1	Bolt 1/4 x 1-1/8	
49	1320224	1	Clamp	
50	3311405	1	Nut 1/4	
51	1001110425	1	Spacer	

FIGURE 3-3. DEUTZ D2011 ENGINE AND PUMP SUB-ASSEMBLY (WITHOUT ARCTIC PACKAGE)

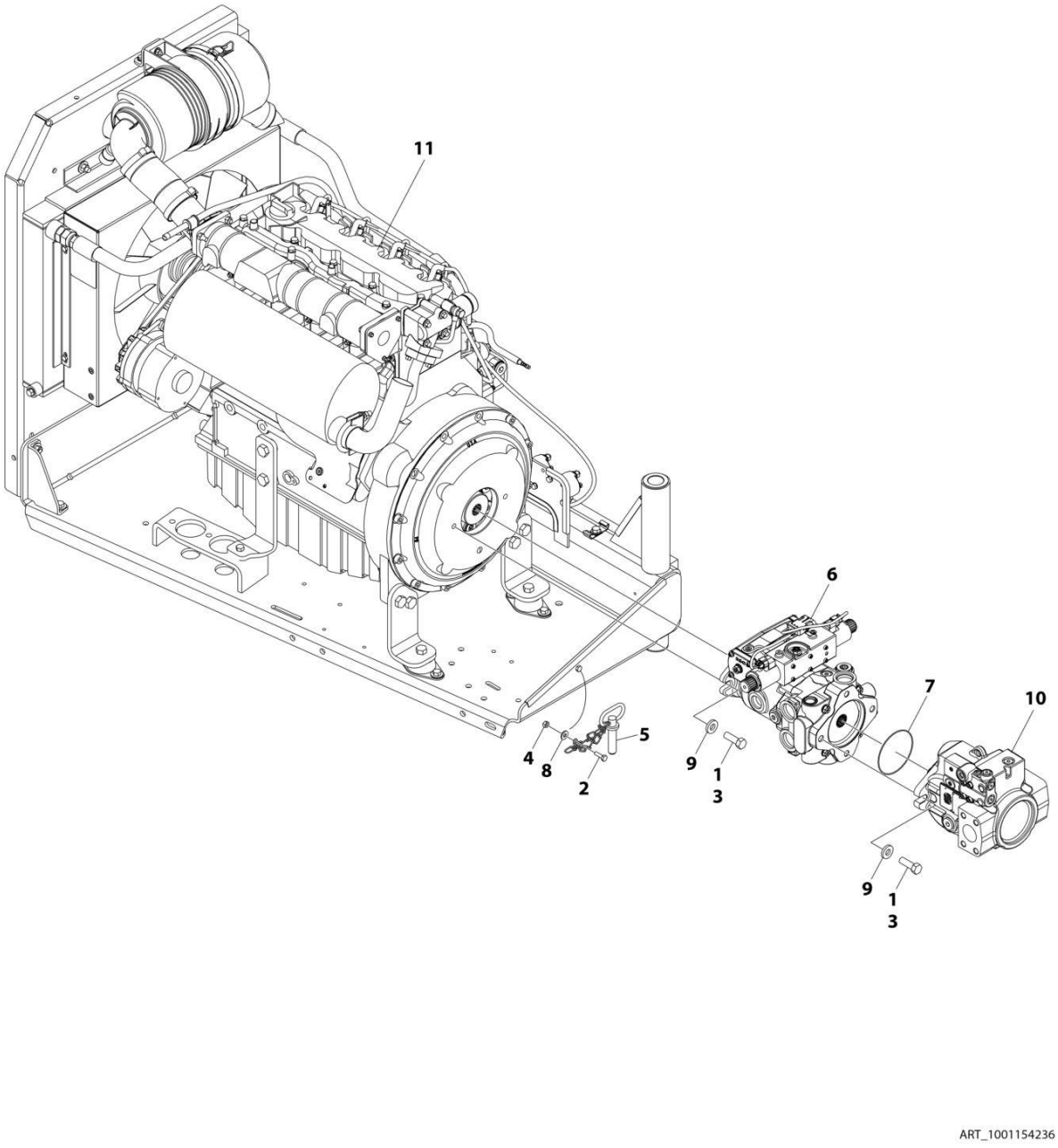

FIGURE 3-3. DEUTZ D2011 ENGINE AND PUMP SUB-ASSEMBLY (WITHOUT ARCTIC PACKAGE)

ITEM	PART NUMBER	QTY	DESCRIPTION	REV
	1001154236	Ref	DEUTZ D2011 ENGINE AND PUMP SUB-ASSEMBLY (WITHOUT ARCTIC PACKAGE)	D
1	0100011	AR	Compound, Locking	
2	0641407	1	Bolt 1/4 x 7/8	
3	0641812	4	Bolt 1/2 x 1-1/2	
4	3311405	1	Nut 1/4	
5	3422532	1	Pin, Hitch	
6	1001225745	1	Hydrostatic Pump Assembly with Fittings (See Separate Breakdown in this Section)	
7	3790044	1	O-Ring	
8	4751400	1	Washer 1/4	
9	4891800	4	Washer 1/2	
10	1001094595	1	Variable Pump Assembly with Fittings (See Separate Breakdown in this Section)	
11	1001153396	1	Engine Assembly Without Arctic Package (See Separate Breakdown in this Section)	

FIGURE 3-4. DEUTZ D2011 ENGINE AND PUMP SUB-ASSEMBLY (WITH ARCTIC PACKAGE)

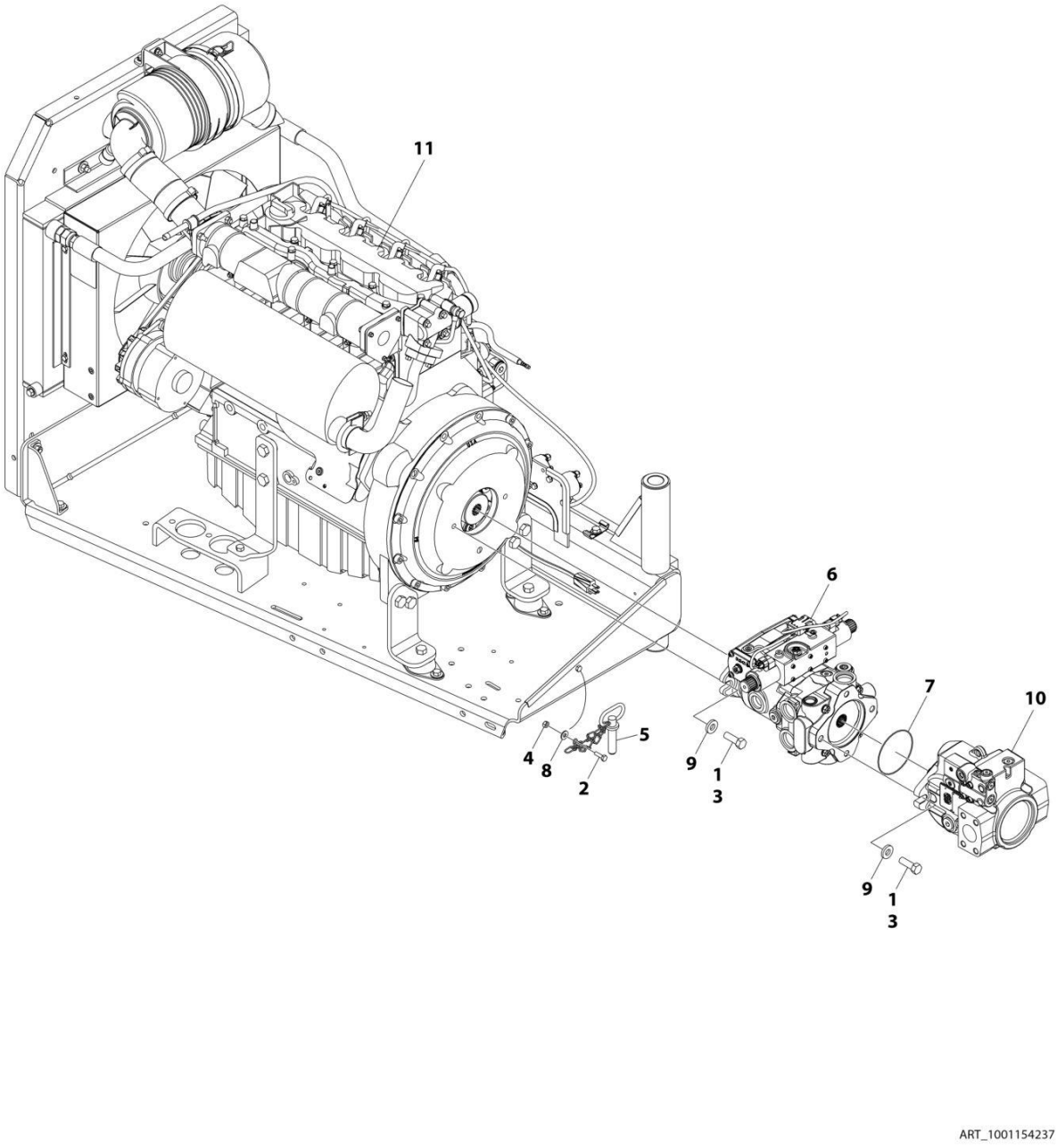

FIGURE 3-4. DEUTZ D2011 ENGINE AND PUMP SUB-ASSEMBLY (WITH ARCTIC PACKAGE)

ITEM	PART NUMBER	QTY	DESCRIPTION	REV
	1001154237	Ref	DEUTZ D2011 ENGINE AND PUMP SUB-ASSEMBLY (WITH ARCTIC PACKAGE)	D
1	0100011	AR	Compound, Locking	
2	0641407	1	Bolt 1/4 x 7/8	
3	0641812	4	Bolt 1/2 x 1-1/2	
4	3311405	1	Nut 1/4	
5	3422532	1	Pin, Hitch	
6	1001225745	1	Hydrostatic Pump Assembly with Fittings (See Separate Breakdown in this Section)	
7	3790044	1	O-Ring	
8	4751400	1	Washer 1/4	
9	4891800	4	Washer 1/2	
10	1001094595	1	Variable Pump Assembly with Fittings (See Separate Breakdown in this Section)	
11	1001153779	1	Engine Assembly With Arctic Package (See Separate Breakdown in this Section)	

FIGURE 3-5. DEUTZ D2011 ENGINE ASSEMBLY (WITHOUT ARCTIC PACKAGE)

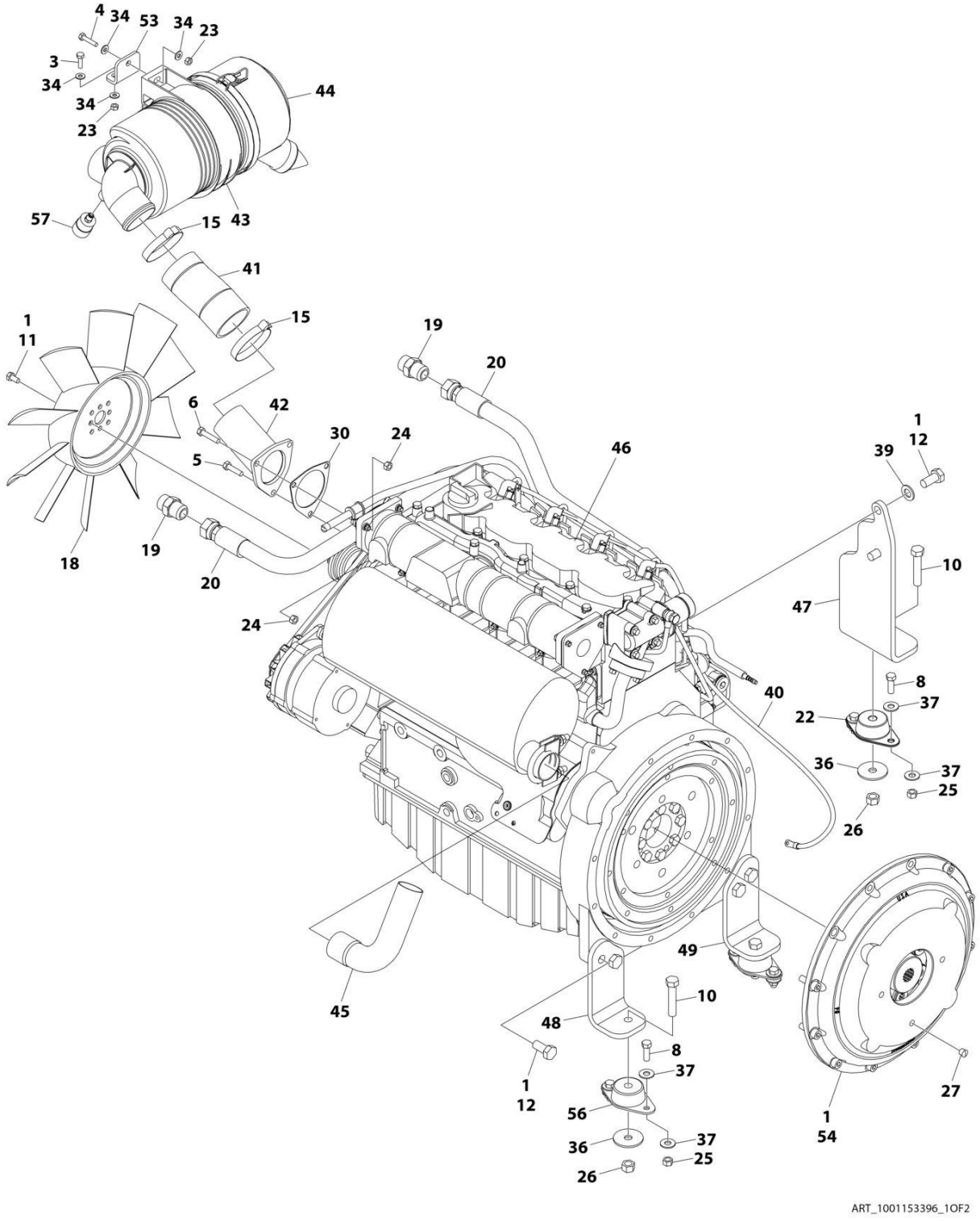

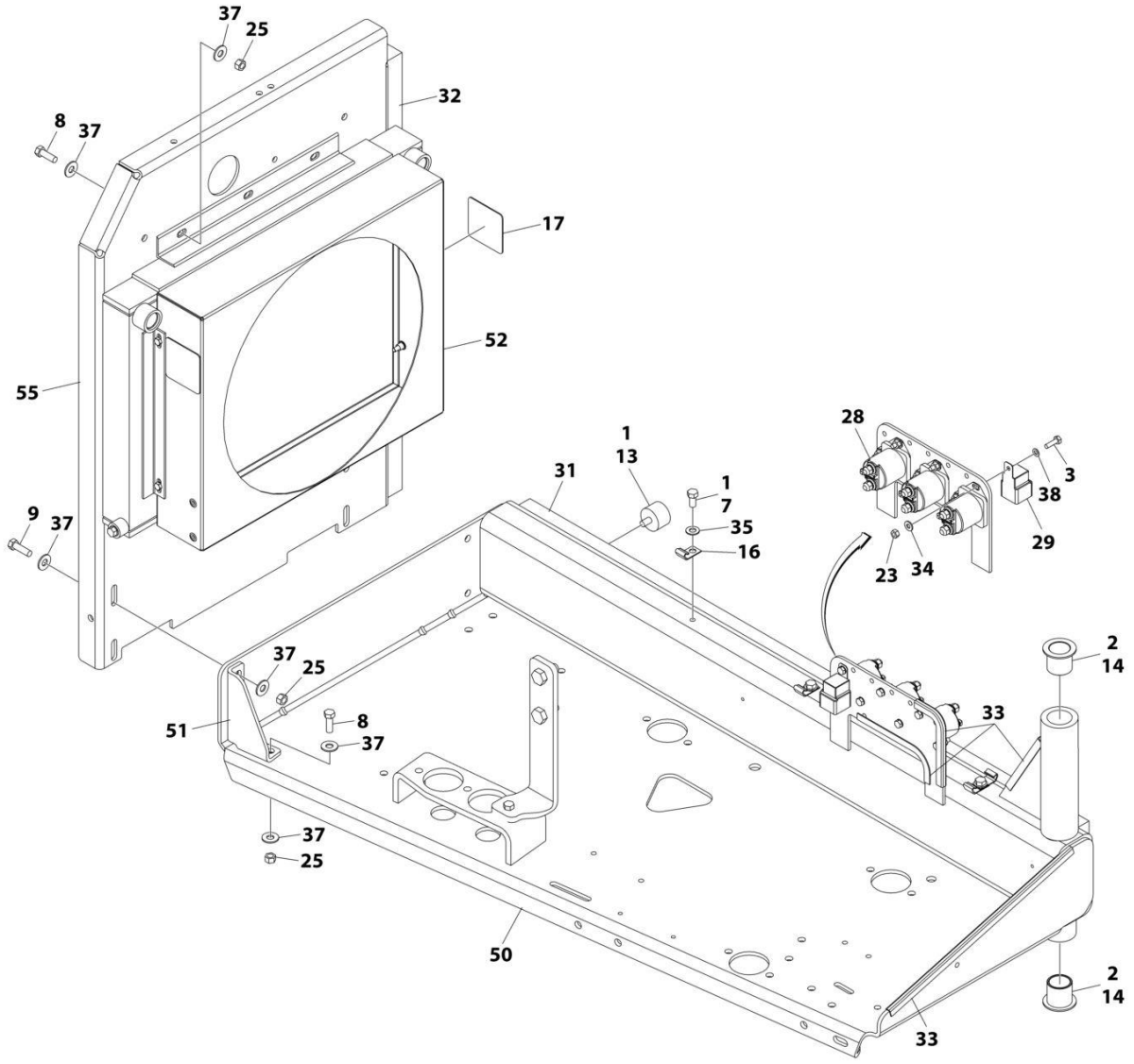

ART_1001153396_2OF2

FIGURE 3-5. DEUTZ D2011 ENGINE ASSEMBLY (WITHOUT ARCTIC PACKAGE)

ITEM	PART NUMBER	QTY	DESCRIPTION	REV
	1001153396	Ref	ENGINE ASSEMBLY WITHOUT ARCTIC PACKAGE	H
1	0100011	AR	Compound, Locking	
2	0100062	AR	Compound, Locking	
3	0641407	8	Bolt 1/4 x 7/8	
4	0641410	2	Bolt 1/4 x 1-1/4	
5	0641510	2	Bolt 5/16 x 1-1/4	
6	0641512	1	Bolt 5/16 x 1-1/2	
7	0641606	3	Bolt 3/8 x 3/4	
8	0641609	14	Bolt 3/8 x 1-1/8	
9	0641610	4	Bolt 3/8 x 1-1/4	
10	0641820	3	Bolt 1/2 x 2-1/2	
11	0700808	4	Bolt M8 x 16	
12	0771414	6	Bolt M14 x 30	
13	0940070	1	Bumper	
14	0961986	2	Bushing, Flanged	
15	1320016	2	Clamp	
16	1320223	4	J-Clip	
17	1703162	2	Decal - Caution Fan Blade	
18	2060025	1	Fan	
19	2220451	2	Fitting, Straight	
20	2720398	2	Hose, Oil Cooler	
22	3200406	1	Mount, Motor	
23	3311405	10	Nut 1/4	
24	3311505	3	Nut 5/16	
25	3311605	18	Nut 3/8	
26	3311805	3	Nut 1/2	
27	3520054	2	Plug	
28	3740067	3	Relay	
29	3740080	1	Relay	
30	3960407	1	Gasket, Air Intake	
31	3960468	1	Seal	
32	3960469	1	Seal	
33	4060805	37 in/1m	Flex-Trim	
34	4711400	14	Washer 1/4	
35	4711600	3	Washer 3/8	
36	4740274	3	Washer, Snubbing	
37	4751600	36	Washer 3/8	
38	4791400	6	Washer, Star 1/4	
39	4812200	2	Washer M14	
40	4923379	1	Harness, Glow Plug	
41	1001001939	1	Hose, Flex	
42	1001146273	1	Adapter, Air Intake	
43	1001147812	1	Clamp	
44	1001147813	1	Air Cleaner Assembly Filter Element	
44	70004020	1	Element, Filter (Not Shown)	
45	1001147820	1	Pipe, Exhaust	
46	1001147823	1	Engine, Deutz D2011 (See Separate Breakdown in this section)	
47	1001149704	1	Support, Engine	
48	1001149705	1	Support, Engine	
49	1001149706	1	Support, Engine	

ITEM	PART NUMBER	QTY	DESCRIPTION	REV
50	1001149793	1	Tray, Engine	
51	1001150915	1	Gusset	
52	1001150998	1	Radiator	
53	1001152459	1	Plate, Air Cleaner Mounting	
54	1001153282	1	Pump Coupling Kit (See Separate Breakdown in this section)	
55	1001153414	1	Plate, Radiator Mounting	
56	3200401	2	Mount, Motor	
57	1001143390	1	Indicator	

FIGURE 3-6. DEUTZ D2011 ENGINE ASSEMBLY (WITH ARCTIC PACKAGE)

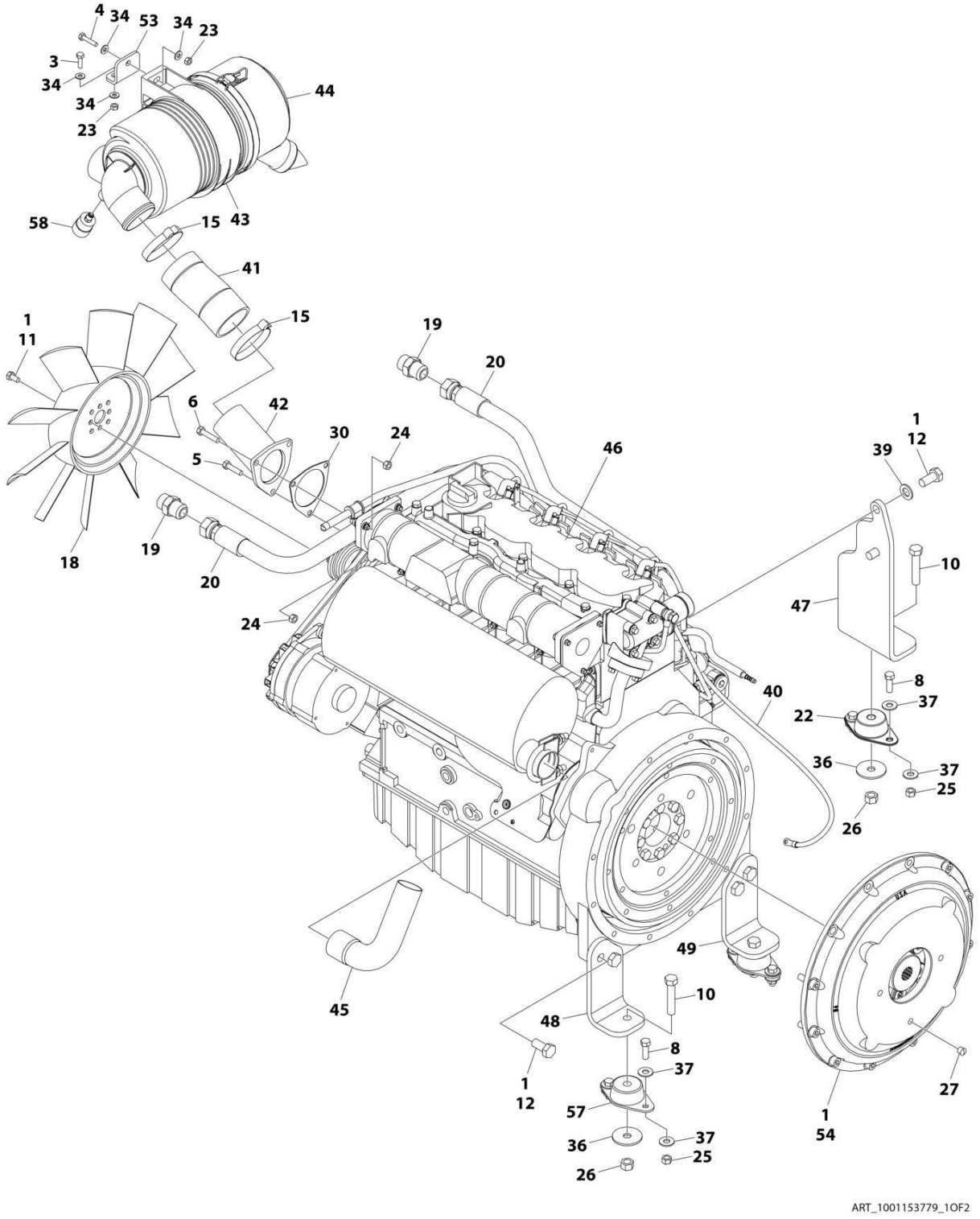

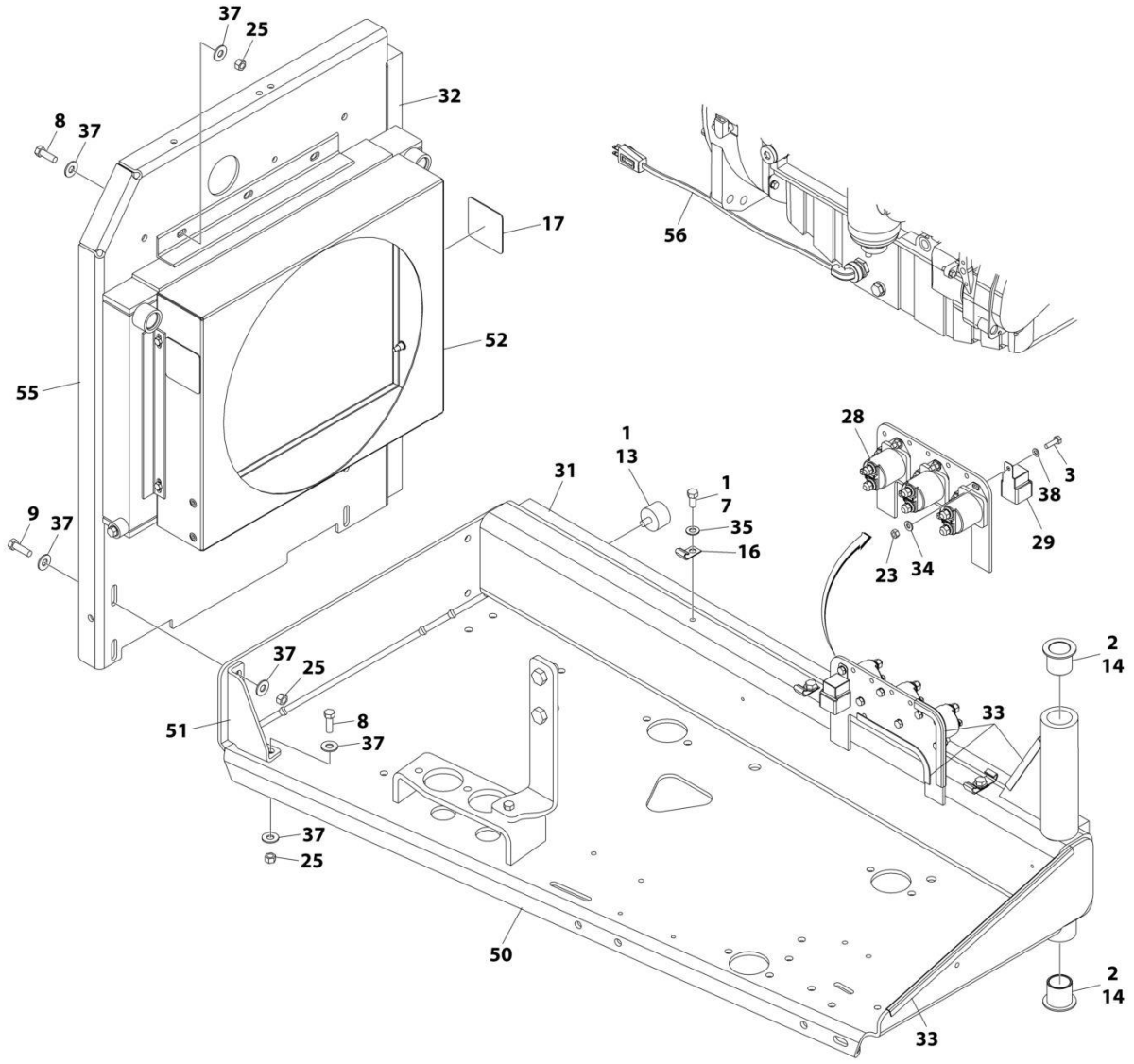

ART_1001153779_2OF2

FIGURE 3-6. DEUTZ D2011 ENGINE ASSEMBLY (WITH ARCTIC PACKAGE)

ITEM	PART NUMBER	QTY	DESCRIPTION	REV
	1001153779	Ref	ENGINE ASSEMBLY WITH ARCTIC PACKAGE	H
1	0100011	AR	Compound, Locking	
2	0100062	AR	Compound, Locking	
3	0641407	8	Bolt 1/4 x 7/8	
4	0641410	2	Bolt 1/4 x 1-1/4	
5	0641510	2	Bolt 5/16 x 1-1/4	
6	0641512	1	Bolt 5/16 x 1-1/2	
7	0641606	3	Bolt 3/8 x 3/4	
8	0641609	14	Bolt 3/8 x 1-1/8	
9	0641610	4	Bolt 3/8 x 1-1/4	
10	0641820	3	Bolt 1/2 x 2-1/2	
11	0700808	4	Bolt M8 x 16	
12	0771414	6	Bolt M14 x 30	
13	0940070	1	Bumper	
14	0961986	2	Bushing, Flanged	
15	1320016	2	Clamp	
16	1320223	4	J-Clip	
17	1703162	2	Decal - Caution Fan Blade	
18	2060025	1	Fan	
19	2220451	2	Fitting, Straight	
20	2720398	2	Hose, Oil Cooler	
22	3200406	1	Mount, Motor	
23	3311405	10	Nut 1/4	
24	3311505	3	Nut 5/16	
25	3311605	18	Nut 3/8	
26	3311805	3	Nut 1/2	
27	3520054	2	Plug	
28	3740067	3	Relay	
29	3740080	1	Relay	
30	3960407	1	Gasket, Air Intake	
31	3960468	1	Seal	
32	3960469	1	Seal	
33	4060805	37 in/1m	Flex-Trim	
34	4711400	14	Washer 1/4	
35	4711600	3	Washer 3/8	
36	4740274	3	Washer, Snubbing	
37	4751600	36	Washer 3/8	
38	4791400	6	Washer, Star 1/4	
39	4812200	2	Washer M14	
40	4923379	1	Harness, Glow Plug	
41	1001001939	1	Hose, Flex	
42	1001146273	1	Adapter, Air Intake	
43	1001147812	1	Clamp	
44	1001147813	1	Air Cleaner Assembly Filter Element	
44	70004020	1	Element, Filter (Not Shown)	
45	1001147820	1	Pipe, Exhaust	
46	1001147823	1	Engine, Deutz D2011 (See Separate Breakdown in this Section)	
47	1001149704	1	Support, Engine	
48	1001149705	1	Support, Engine	
49	1001149706	1	Support, Engine	

ITEM	PART NUMBER	QTY	DESCRIPTION	REV
50	1001149793	1	Tray, Engine	
51	1001150915	1	Gusset	
52	1001150998	1	Radiator	
53	1001152459	1	Plate, Air Cleaner Mounting	
54	1001153282	1	Pump Coupling Kit (See Separate Breakdown in this Section)	
55	1001153414	1	Plate, Radiator Mounting	
56	2580062	1	Heater, Block	
57	3200401	2	Mount, Motor	
58	1001143390	1	Indicator	

FIGURE 3-7. DEUTZ D2011 ENGINE COMPONENTS

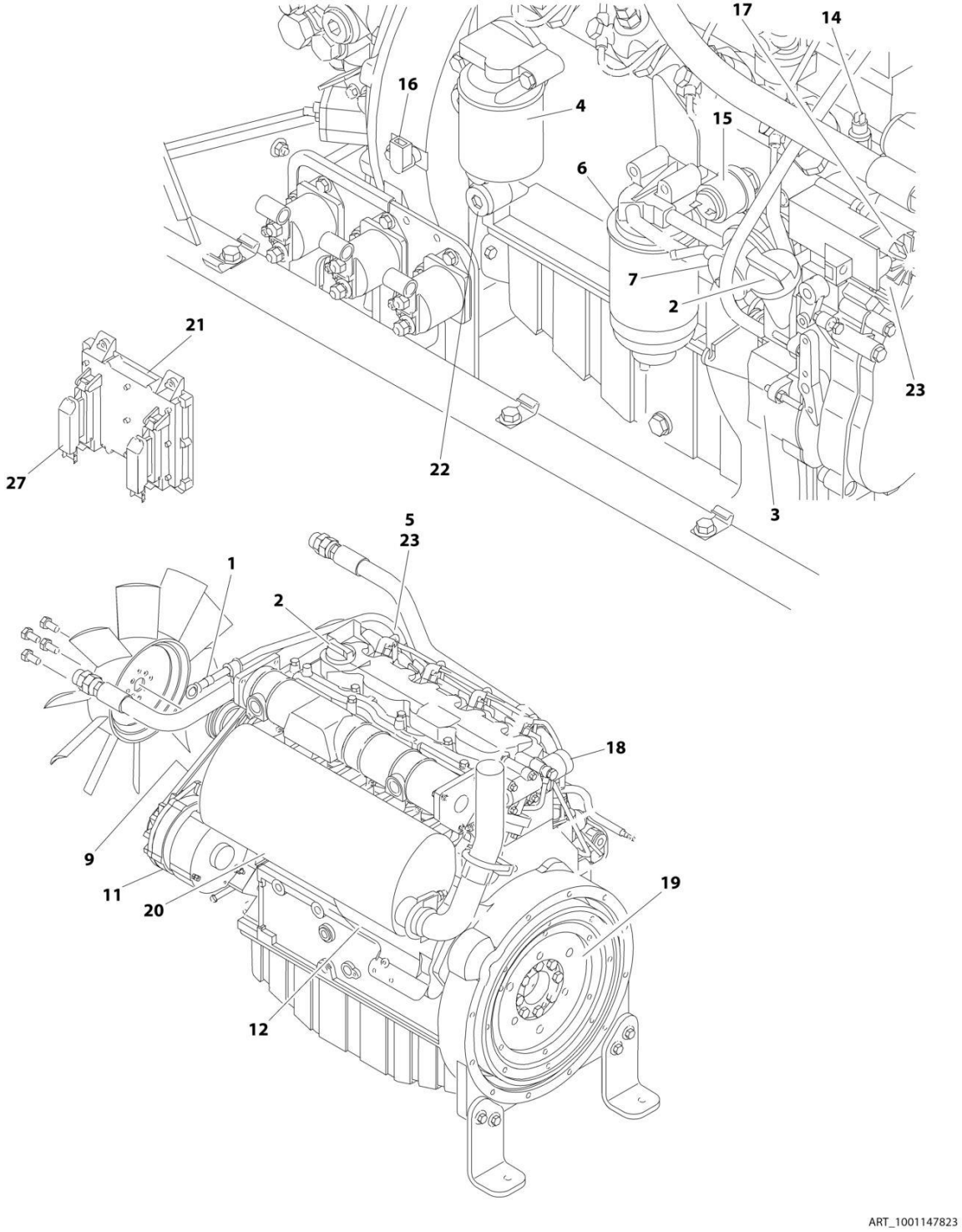

FIGURE 3-7. DEUTZ D2011 ENGINE COMPONENTS

ITEM	PART NUMBER	QTY	DESCRIPTION	REV
	1001147823	Ref	ENGINE COMPONENTS	C
1	70004287	1	Dipstick	
1	70000044	1	Seal, Dipstick	
1	70001002	1	Tube, Dipstick	
1	7020403	1	Seal, Dipstick Tube	
2	7020465	2	Cap, Filler	
3	70001850	1	Pump, Oil Lube	
3	7020468	1	Seal Between Oil Pump and Engine Block (Not Shown)	
4	7016331	1	Filter, Oil	
4	70003472	1	Bracket, Oil Filter	
4	7027236	1	Sender, Temperature	
4	70025082	1	Ring, Sealing	
5	70000912	4	Series A Injector	
5	70000913	4	Series B Injector	
5	70000914	4	Series C Injector	
5	70000915	4	Series D Injector	
5	70003464	4	Seal/Gasket, Pump (1 Per Injector)	
5	70003478	4	Injector, Fuel	
5	70003136	4	Seal/Gasket, Pump (1 Per Injector)	
6	7016328	1	Filter, Fuel	
6	70003465	1	Sensor	
6	70003466	1	Seal, Sensor	
7	70000916	1	Pump, Fuel Supply	
7	70001435	1	Repair Kit for Fuel Supply Pump	
7	70000919	1	Hand Pump for Fuel Supply Pump	
7	70000917	1	O - Seal Between Fuel Pump and Engine Block	
7	70000918	1	O - Seal Between Fuel Pump and Hand Pump	
8	70001871	4	Gasket, Intake Manifold	
9	7020408	1	V-Belt	
10		Ref	Exhaust Manifold Components (Not Shown)	
10	70001835	1	Gasket, Exhaust Adapter to Exhaust Rail	
10	70001841	1	Valve, Exhaust (Fits into Exhaust Adapter)	
10	70001836	1	Gasket, Exhaust Rail to Cylinder Head	
10	70001837	1	Gasket, Exhaust Manifold to Muffler	
10	70002200	4	Stud, Mounting	
10	See Note	AR	Nut, Exhaust Manifold	
11	70004056	1	Alternator	
11	70001868	1	Regulator, Voltage (Not Shown)	
11	70001866	1	Seal, Gasket for Voltage Regulator (Not Shown)	
11	70002234	1	Bar, Alternator Adjustment	
12	7020479	1	Starter	
12	70004058	1	Relay	
13	70004060	2	Plug-In Connector	
14	7027791	1	Transmitter, Temperature	
15	7027790	1	Sensor, Oil Pressure	
16	70004272	1	Sensor, Speed	
17	7027792	1	Throttle Actuator	
17	7027276	2	Spring	
18	70003475	1	Thermostat (Located at rear of engine block - Not Shown)	
19	70001870	1	Flywheel with Ring Gear	

ITEM	PART NUMBER	QTY	DESCRIPTION	REV
19	7024579	1	Gear, Ring 110 Tooth	
20	7000695	1	Muffler	
20	70001844	1	U-Ciamp	
20	7020471	4	Gasket	
21	7027795	1	Module, Control	
22	70001181	1	Valve, Pressure Control	
22	70124410	1	Spring	
22	70025082	1	Seal	
22	70124440	1	Screw, Locking	
23	70000345	4	Plug, Glow	
24	70000800	1	Camshaft Pulley Repair Kit (Not Shown	
26	70002415	1	Gasket, Head with 1 Notch (Not Shown)	
62	70002416	1	Gasket, Head with 2 Notch (Not Shown)	
26	70002417	1	Gasket, Head with 3 Notch (Not Shown)	
27	7027796	1	Harness, Engine (Connects to Item 421)	
27	70001872	1	Harness, Engine (Connects to p/n 7027796)	
28		Ref	Gaskets and Seals - Miscellaneous (Not Shown)	
28	70004289	1	Gasket Set	
28	70002718	1	Seal, Rear Main	
28	70004280	1	Seal, Front Main	
29	70025752	1	Valve, Pressure Relief (Not Shown - Located at Engine Front Left)	
29	70025753	1	Spring	
29	70005916	1	Seal	
29	70005917	1	Plug, Locking	

FIGURE 3-8. DEUTZ TD2.9L4 ENGINE INSTALLATION (WITHOUT ARCTIC PACKAGE)

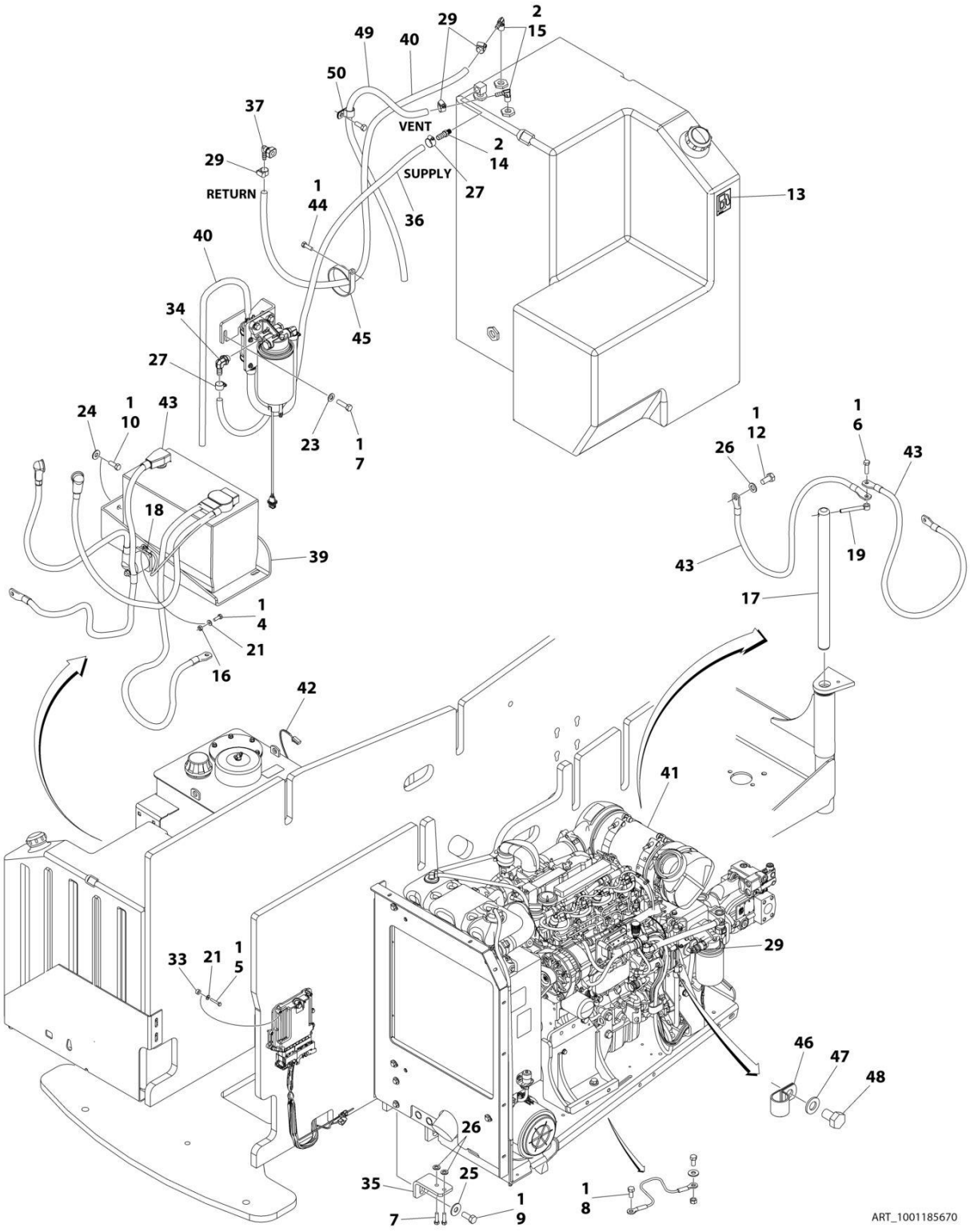

FIGURE 3-8. DEUTZ TD2.9L4 ENGINE INSTALLATION (WITHOUT ARCTIC PACKAGE)

ITEM	PART NUMBER	QTY	DESCRIPTION	REV
	1001185670	Ref	DEUTZ ENGINE INSTALLATION WITHOUT ARCTIC PACKAGE	F
1	0100011	AR	Compound, Locking	
2	0100020	AR	Sealant, Pipe	
4	0641406	2	Bolt 1/4 x 3/4	
5	0641412	4	Bolt 1/4 x 1-1/2	
6	0641610	1	Bolt 3/8 x 1-1/4	
7	0641611	4	Bolt 3/8 x 1-3/8	
8	0641808	1	Bolt 1/2 x 1	
9	0642012	1	Bolt 5/8 x 1-1/2	
10	0681608	3	Bolt 3/8 x 1	
12	0771212	1	Bolt M12 x 25	
13	1701505	1	Decal - Diesel Fuel (Not Shown Located on Fuel Tank)	
14	2180832	1	Fitting, 90 NPT/ Barbed	
15	2220313	2	Fitting, 90 NPT/Barbed	
16	3311405	2	Nut 1/4-20	
17	3422446	1	Pin, Pivot	
18	3740067	1	Relay	
19	3841143	1	Pin, Keeper	
20	4240033	1	Tie-Strap (Not Shown)	
21	4711400	6	Washer 1/4	
23	4711600	2	Washer 3/8	
24	4751600	3	Washer 3/8	
25	4752000	1	Washer 5/8	
26	4812100	3	Washer M12	
27	8405006	2	Clamp	
29	8410013	4	Clamp	
33	1001110425	4	Spacer	
34	1001142501	1	Fitting, Straight Metric/Barbed	
35	1001153359	1	Mount, Engine	
36	1001154405	54 in/ 1.4m	Hose	
37	1001155823	1	Fitting, Quick Disconnect 90	
39	1001162497	1	Bracket, Battery	
40	1001165035	28 ft/ 8.5m	Hose	
41	1001185667	1	Engine and Pump Assembly without Arctic Package (See Separate Breakdown in this Section)	
42	1001138491	1	Harness, Fuel (Not Shown - See Separate Breakdown in ELECTRICAL SECTION)	
43	1001143736	1	Battery Cable Kit (Not Shown)	F
43	7027084	1	Cable, Battery (Black) (Battery - to Tray Pivot and Relay Grounds)	
43	8270147	1	Terminal, Battery (With Boot) Cable, Battery (Black)	
43	7027085	1	Cable, Battery (Black) (Battery - to Aux Pump Ground)	
43	7027086	1	Cable, Battery (Black) (Engine to Tray Pivot Ground)	
43	7027087	1	Cable (Red) (Battery + to Relays/Starter)	
43	7027088	1	Cable (Red) (Aux Relay to Aux Pump)	
43	See Note	1	Cable (Auxiliary Relay to Starter) (Note: Use p/n 7027087)	
44	0641508	1	Bolt 5/16 x 1	
45	1321339	1	Clamp	
46	1320061	1	Clamp	

ITEM	PART NUMBER	QTY	DESCRIPTION	REV
47	4812000	1	Washer M10	
48	0761008	1	Bolt M10 x 16	
49	2750532	4 ft/ 1.2m	Hose (Vent Line)	
50	8406102	1	Clip	

FIGURE 3-9. DEUTZ TD2.9L4 ENGINE INSTALLATION (WITH ARCTIC PACKAGE)

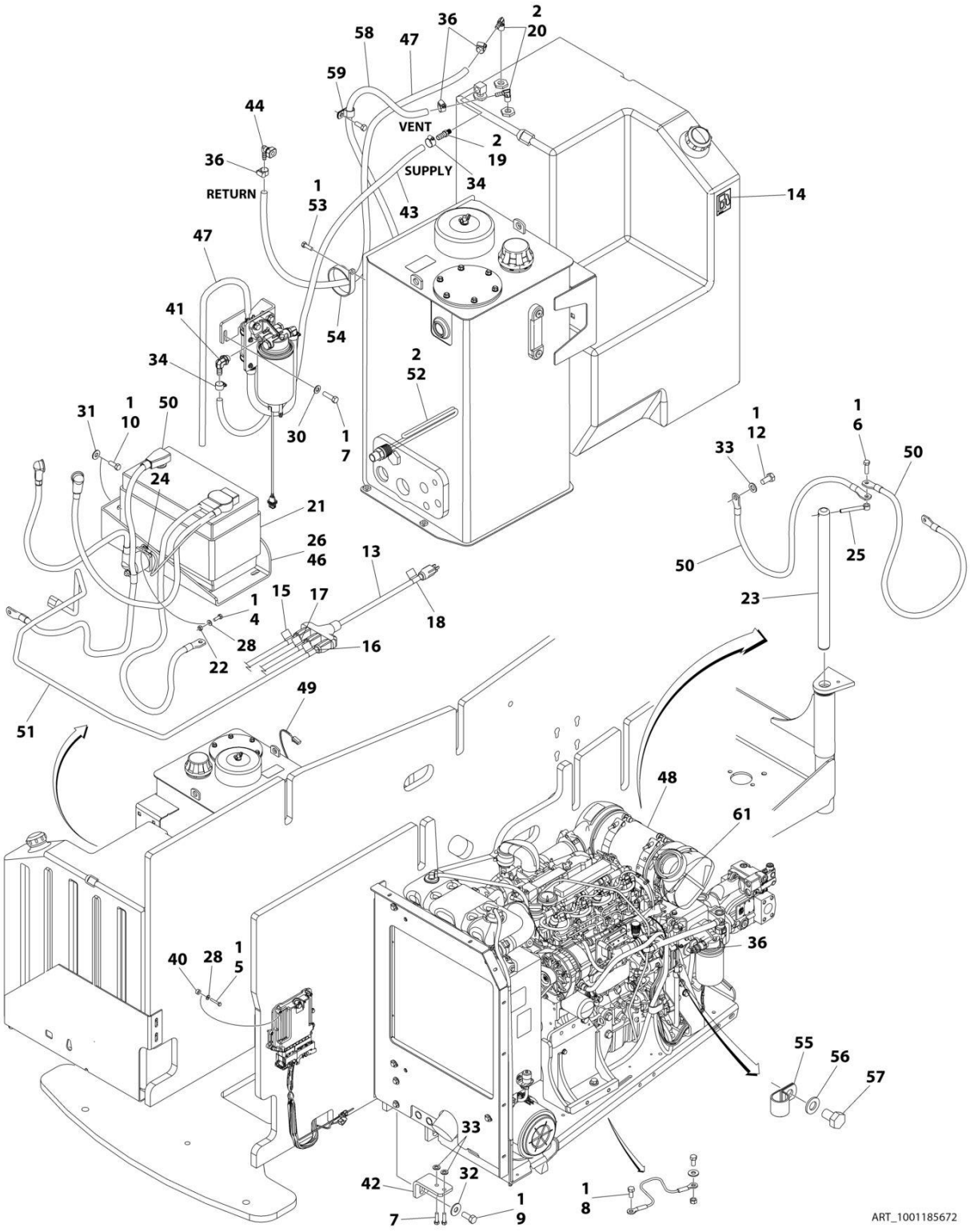

FIGURE 3-9. DEUTZ TD2.9L4 ENGINE INSTALLATION (WITH ARCTIC PACKAGE)

ITEM	PART NUMBER	QTY	DESCRIPTION	REV
	1001185672	Ref	DEUTZ ENGINE INSTALLATION WITH ARCTIC PACKAGE	G
1	0100011	AR	Compound, Locking	
2	0100020	AR	Sealant, Pipe	
4	0641406	2	Bolt 1/4 x 3/4	
5	0641412	4	Bolt 1/4 x 1-1/2	
6	0641610	1	Bolt 3/8 x 1-1/4	
7	0641611	4	Bolt 3/8 x 1-3/8	
8	0641808	1	Bolt 1/2 x 1	
9	0642012	1	Bolt 5/8 x 1-1/2	
10	0681608	3	Bolt 3/8 x 1 Grade 8	
12	0771212	1	Bolt M12 x 25 Grade 10.9	
13	1060626	1	Cord, 3 Way Extension	
14	1701505	1	Decal - Diesel Fuel (Not Shown Located on Fuel Tank)	
15	1702941	1	Decal - Battery Heater	
16	1702942	1	Decal - Engine Block Heater	
17	1702943	1	Decal - Hydraulic Tank Heater	
18	1702944	1	Decal - Heater Cord	
19	2180832	1	Fitting, 90 NPT/ Barbed	
20	2220313	2	Fitting, 90 NPT/Barbed	
21	2580024	1	Heater, Battery	
22	3311405	2	Nut 1/4	
23	3422446	1	Pin, Pivot	
24	3740067	1	Relay	
25	3841143	1	Pin, Keeper	
26	3980007	1	Seat, Battery	
27	4240033	1	Tie-Strap (Not Shown)	
28	4711400	6	Washer 1/4	
30	4711600	2	Washer 3/8	
31	4751600	3	Washer 3/8	
32	4752000	1	Washer 5/8	
33	4812100	3	Washer M12	
34	8405006	2	Clamp	
36	8410013	4	Clamp	
40	1001110425	4	Spacer	
41	1001142501	1	Fitting, Straight Metric/Barbed	
42	1001153359	1	Mount, Engine	
43	1001154405	54 in/ 1.4m	Hose	
44	1001155823	1	Fitting, Quick Disconnect 90	
46	1001162497	1	Bracket, Battery	
47	1001165035	28 ft/ 8.5m	Hose	
48	1001185671	1	Deutz TD2.9L4 Engine and Pump Sub-Assembly (See Separate Breakdown in this Section)	
49	1001138491	1	Harness, Fuel (Not Shown - See Separate Breakdown in ELECTRICAL SECTION)	
50	1001143736	1	Battery Cable Kit (Not Shown)	E
50	7027084	1	Cable, Battery (Black) (Battery - to Tray Pivot Grd)	
50	8270147	1	Terminal, Battery (With Boot)	
50	7027085	1	Cable, Battery (Black) (Battery - to Aux Pump and Relay Grds)	

ITEM	PART NUMBER	QTY	DESCRIPTION	REV
50	7027086	1	Cable, Battery (Black) (Engine to Tray Pivot Grd)	
50	7027087	1	Cable (Red) (Battery + to Aux Relay/Power Module/Starter)	
50	7027088	1	Cable (Red) (Aux Relay to Aux Pump)	
51	1001150918	1	Cord, 8ft Extension	
52	1001188972	1	Heater, Hydraulic Tank	
53	0641508	1	Bolt 5/16 x 1	
54	1321339	1	Clamp	
55	1320061	1	Clamp	
56	4812000	1	Washer M10	
57	0761008	1	Bolt M10 x 16	
58	2750532	4 ft/ 1.2m	Hose (Vent Line)	
59	8406102	1	Clip	
61	1001233763	Ref	Breather Heater Installation (Not Shown - See Separate Breakdown in this Section)	

FIGURE 3-10. DEUTZ TD2.9L4 ENGINE INSTALLATION (STAGE V)

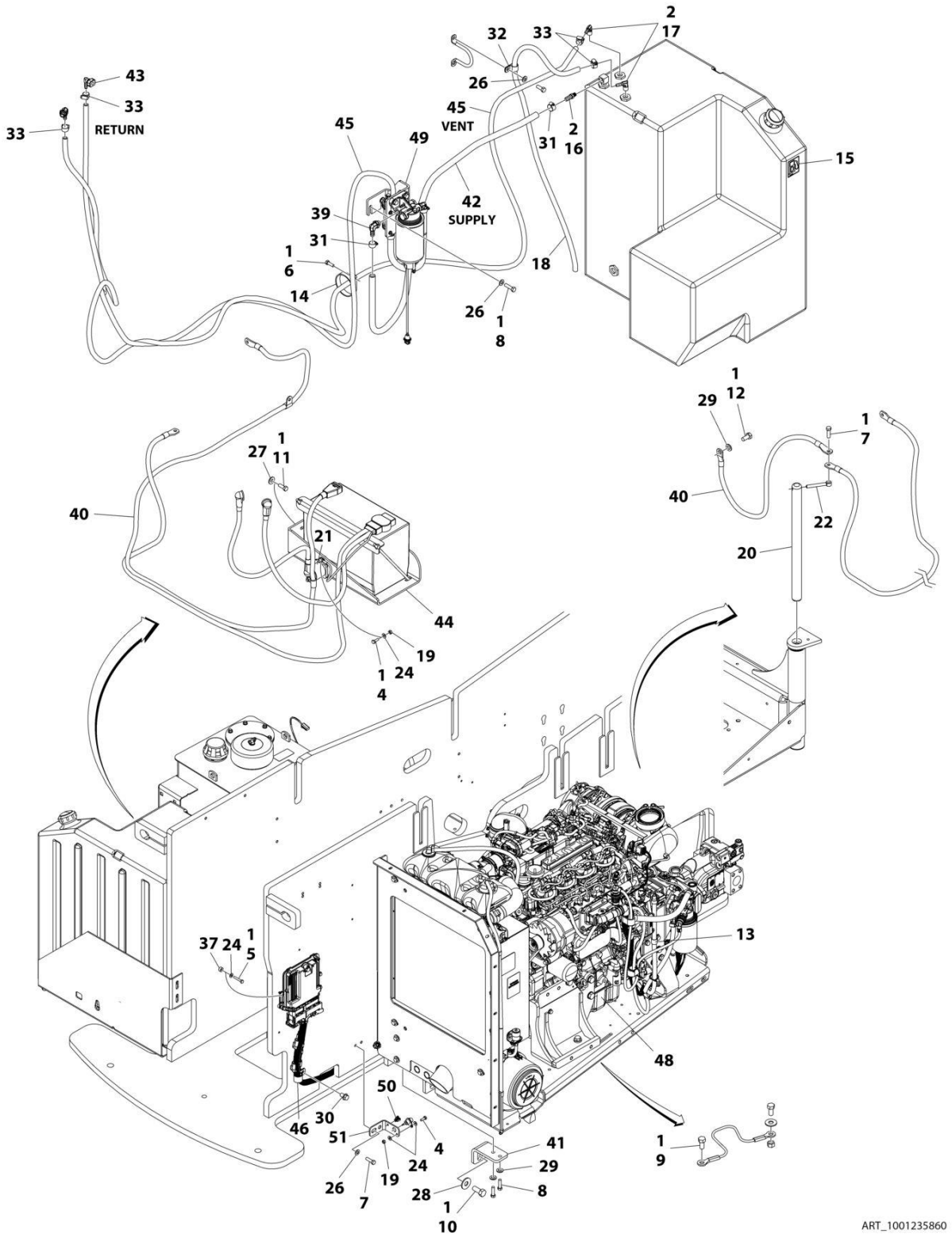

FIGURE 3-10. DEUTZ TD2.9L4 ENGINE INSTALLATION (STAGE V)

ITEM	PART NUMBER	QTY	DESCRIPTION	REV
	1001235860	Ref	DEUTZ 2.9L4 (STAGE V) ENGINE INSTALLATION	F
1	0100011	AR	Compound, Locking	
2	0100020	AR	Sealant, Pipe	
4	0641406	2	Bolt 1/4 x 3/4	
5	0641412	4	Bolt 1/4 x 1-1/2	
6	0641508	1	Bolt 5/16 x 1	
7	0641610	1	Bolt 3/8 x 1-1/4	
8	0641611	4	Bolt 3/8 x 1-3/8	
9	0641808	1	Bolt 1/2 x 1	
10	0642012	1	Bolt 5/8 x 1-1/2	
11	0681608	3	Bolt 3/8 x 1	
12	0771212	1	Bolt M12 x 25	
13	1320061	1	Clamp	
14	1321339	1	Clamp	
15	1701505	1	Decal - Diesel Fuel (Not Shown Located on Fuel Tank)	
16	2180832	1	Fitting, 90 NPT/ Barbed	
17	2220313	2	Fitting, 90 NPT/Barbed	
18	2750532	4 ft/ 1.2m	Hose (Vent Line)	
19	3311405	2	Nut 1/4	
20	3422446	1	Pin, Pivot	
21	3740067	1	Relay	
22	3841143	1	Pin, Keeper	
23	4240099	AR	Tie-Strap (Not Shown)	
24	4711400	8	Washer 1/4	
26	4711600	4	Washer 3/8	
27	4751600	3	Washer 3/8	
28	4752000	1	Washer 5/8	
29	4812100	3	Washer M12	
30	5251210	1	Bolt M12 x 20	
31	8405006	2	Clamp	
32	8406102	1	Clip	
33	8410013	4	Clamp	
37	1001110425	4	Spacer	
38	1001138491	1	Harness, Fuel (Not Shown - See Separate Breakdown in ELECTRICAL Section)	
39	1001142501	1	Fitting, Straight Metric/Barbed	
40	1001143736	1	Battery Cable Kit	E
40	7027084	1	Cable, Battery (Black) (Battery - to Tray Pivot Grd)	
40	8270147	1	Terminal, Battery (With Boot)	
40	7027085	1	Cable, Battery (Black) (Battery - to Aux Pump and Relay Grds)	
40	7027086	1	Cable, Battery (Black) (Engine to Tray Pivot Grd)	
40	7027087	1	Cable (Red) (Battery + to Aux Relay/Power Module/Starter)	
40	7027088	1	Cable (Red) (Aux Relay to Aux Pump)	
41	1001153359	1	Mount, Engine	
42	1001154405	54 in/ 1.4m	Hose	
43	1001155823	1	Fitting, Quick Disconnect 90	
44	1001162497	1	Bracket, Battery	
45	1001165035	28 ft/ 8.5m	Hose	

ITEM	PART NUMBER	QTY	DESCRIPTION	REV
46	1001191620	1	Clamp	
48	1001235861	1	Deutz TD2.9L4 Engine and Pump Sub-Assembly (STAGE V) (See Separate Breakdown in this Section)	
49	1001235949	1	Bracket Assembly Less Filter/Pump (See Separate Breakdown in this Section)	
50	1001146588	1	Strap	
51	1001256879	1	Bracket	
52	1062255	1	Tie-Strap (Not Shown)	

FIGURE 3-11. DEUTZ TD2.9L4 ENGINE INSTALLATION (CHINA III SPECS)

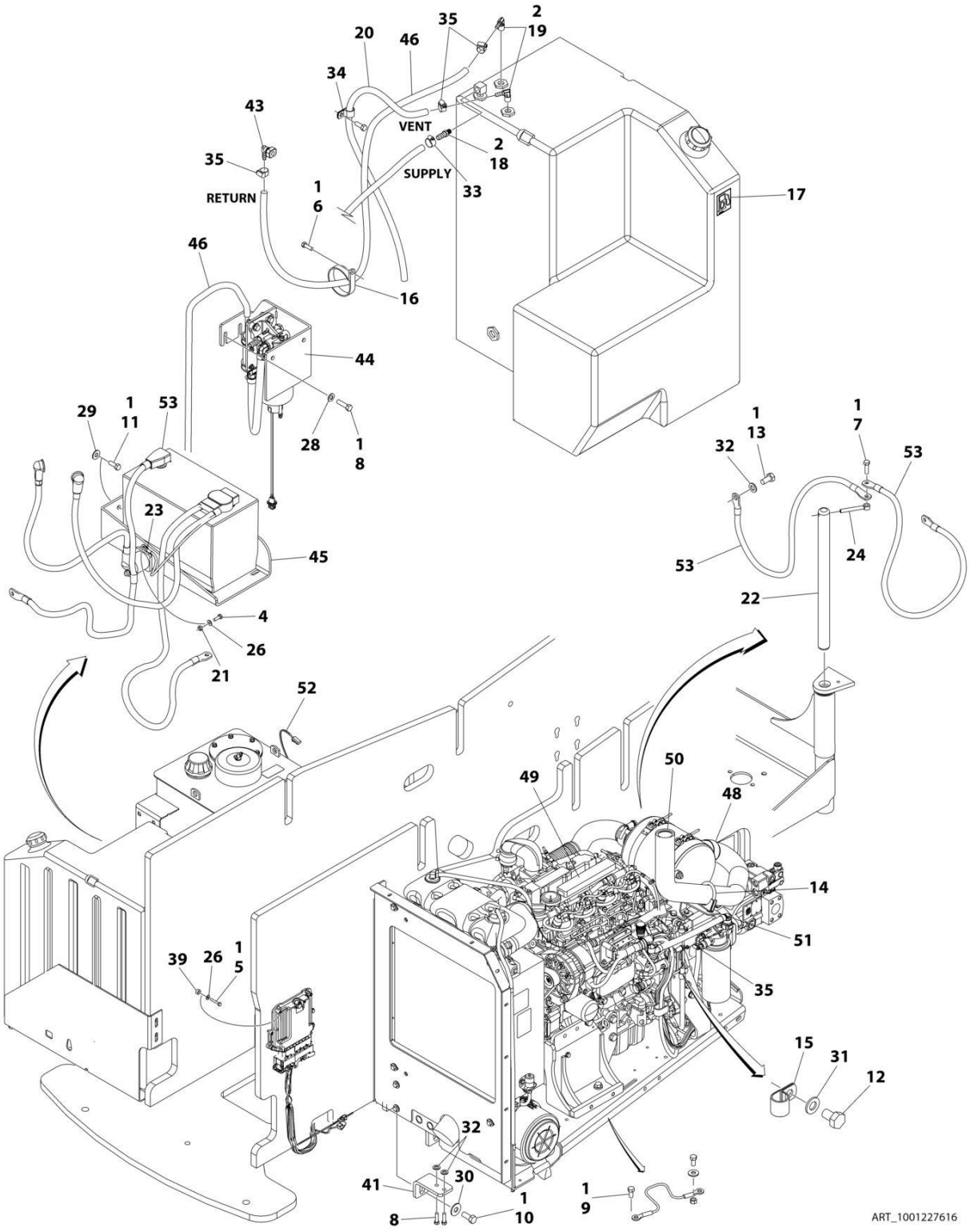

FIGURE 3-11. DEUTZ TD2.9L4 ENGINE INSTALLATION (CHINA III SPECS)

ITEM	PART NUMBER	QTY	DESCRIPTION	REV
	1001227616	Ref	DEUTZ ENGINE INSTALLATION	D
1	0100011	AR	Compound, Locking	
2	0100020	AR	Sealant, Pipe	
4	0641406	2	Bolt 1/4 x 3/4	
5	0641412	4	Bolt 1/4 x 1-1/2	
6	0641508	1	Bolt 5/16 x 1	
7	0641610	1	Bolt 3/8 x 1-1/4	
8	0641611	4	Bolt 3/8 x 1-3/8	
9	0641808	1	Bolt 1/2 x 1	
10	0642012	1	Bolt 5/8 x 1-1/2	
11	0681608	3	Bolt 3/8 x 1	
12	0761008	1	Bolt M10 x 16	
13	0771212	1	Bolt M12 x 25	
14	1320011	1	Clamp, Muffler (Located on Exhaust)	
15	1320061	1	Clamp	
16	1321339	1	Clamp	
17	1701505	1	Decal - Diesel Fuel (Not Shown Located on Fuel Tank)	
18	2180832	1	Fitting, 90 NPT/ Barbed	
19	2220313	2	Fitting, 90 NPT/Barbed	
20	2750532	4 ft/ 1.2m	Hose (Vent Line)	
21	3311405	2	Nut 1/4-20	
22	3422446	1	Pin, Pivot	
23	3740067	1	Relay	
24	3841143	1	Pin, Keeper	
25	4240033	AR	Tie-Strap (Not Shown)	
26	4711400	7	Washer 1/4	
28	4711600	2	Washer 3/8	
29	4751600	3	Washer 3/8	
30	4752000	1	Washer 5/8	
31	4812000	1	Washer M10	
32	4812100	3	Washer M12	
33	8405006	1	Clamp	
34	8406102	1	Clip	
35	8410013	4	Clamp	
39	1001110425	4	Spacer	
41	1001153359	1	Mount, Engine	
43	1001155823	1	Fitting, Quick Disconnect 90	
44	1001227224	1	Bracket Assembly Less Filter/Pump (See Separate Breakdown in this Section)	
45	1001162497	1	Bracket, Battery	
46	1001165035	28 ft/ 8.5m	Hose	
48	1001221212	1	Clamp (Located on Exhaust)	
49	1001227615	1	Deutz TD2.9L4 Engine and Pump Sub-Assembly (See Separate Breakdown in this Section)	
50	1001247013	1	Pipe	
51	1001227620	1	Plate (Located on Exhaust)	
52	1001138491	1	Harness, Fuel (Not Shown - See Separate Breakdown in ELECTRICAL SECTION)	
53	1001143736	1	Battery Cable Kit (Not Shown)	E

ITEM	PART NUMBER	QTY	DESCRIPTION	REV
53	7027084	1	Cable, Battery (Black) (Battery - to Tray Pivot Grd)	
53	8270147	1	Terminal, Battery (With Boot)	
53	7027085	1	Cable, Battery (Black) (Battery - to Aux Pump and Relay Grds)	
53	7027086	1	Cable, Battery (Black) (Engine to Tray Pivot Grd)	
53	7027087	1	Cable (Red) (Battery + to Aux Relay/Power Module/Starter)	
53	7027088	1	Cable (Red) (Aux Relay to Aux Pump)	

FIGURE 3-12. DEUTZ TD2.9L4 ENGINE AND PUMP SUB-ASSEMBLY (WITHOUT ARCTIC PACKAGE)

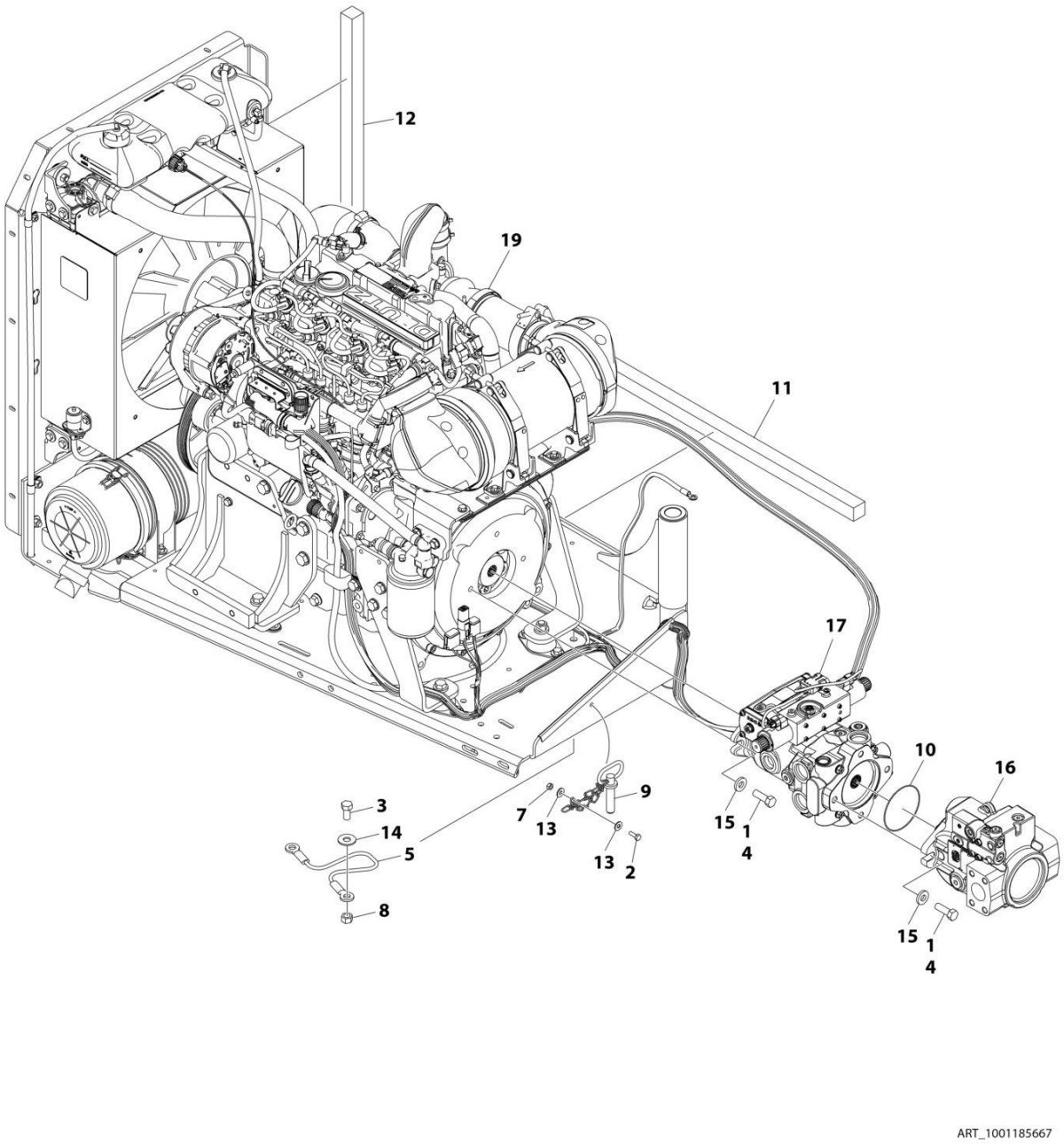

FIGURE 3-12. DEUTZ TD2.9L4 ENGINE AND PUMP SUB-ASSEMBLY (WITHOUT ARCTIC PACKAGE)

ITEM	PART NUMBER	QTY	DESCRIPTION	REV
	1001185667	Ref	DEUTZ TD2.9L4 ENGINE AND PUMP SUB-ASSEMBLY (WITHOUT ARCTIC PACKAGE)	H
1	0100011	AR	Compound, Locking	
2	0641406	1	Bolt 1/4 x 3/4	
3	0641808	1	Bolt 1/2 x 1	
4	0641812	4	Bolt 1/2 x 1-1/2	
5	1060637	1	Lanyard	
7	3311405	1	Nut 1/4	
8	3311801	1	Nut 1/2	
9	3422532	1	Pin	
10	3790044	1	O-Ring	
11	3960468	1	Seal	
12	3960469	1	Seal	
13	4751400	2	Washer 1/4	
14	4751800	1	Washer 1/2	
15	4891800	4	Washer 1/2	
16	1001094595	1	Variable Pump Assembly (See Separate Breakdown in this Section)	
17	1001225745	1	Hydrostatic Pump Assembly (See Separate Breakdown in this Section)	
19	1001176027	1	Engine Assembly Without Arctic Package (See Separate Breakdown in this Section)	

FIGURE 3-13. DEUTZ TD2.9L4 ENGINE AND PUMP SUB-ASSEMBLY (WITH ARCTIC PACKAGE)

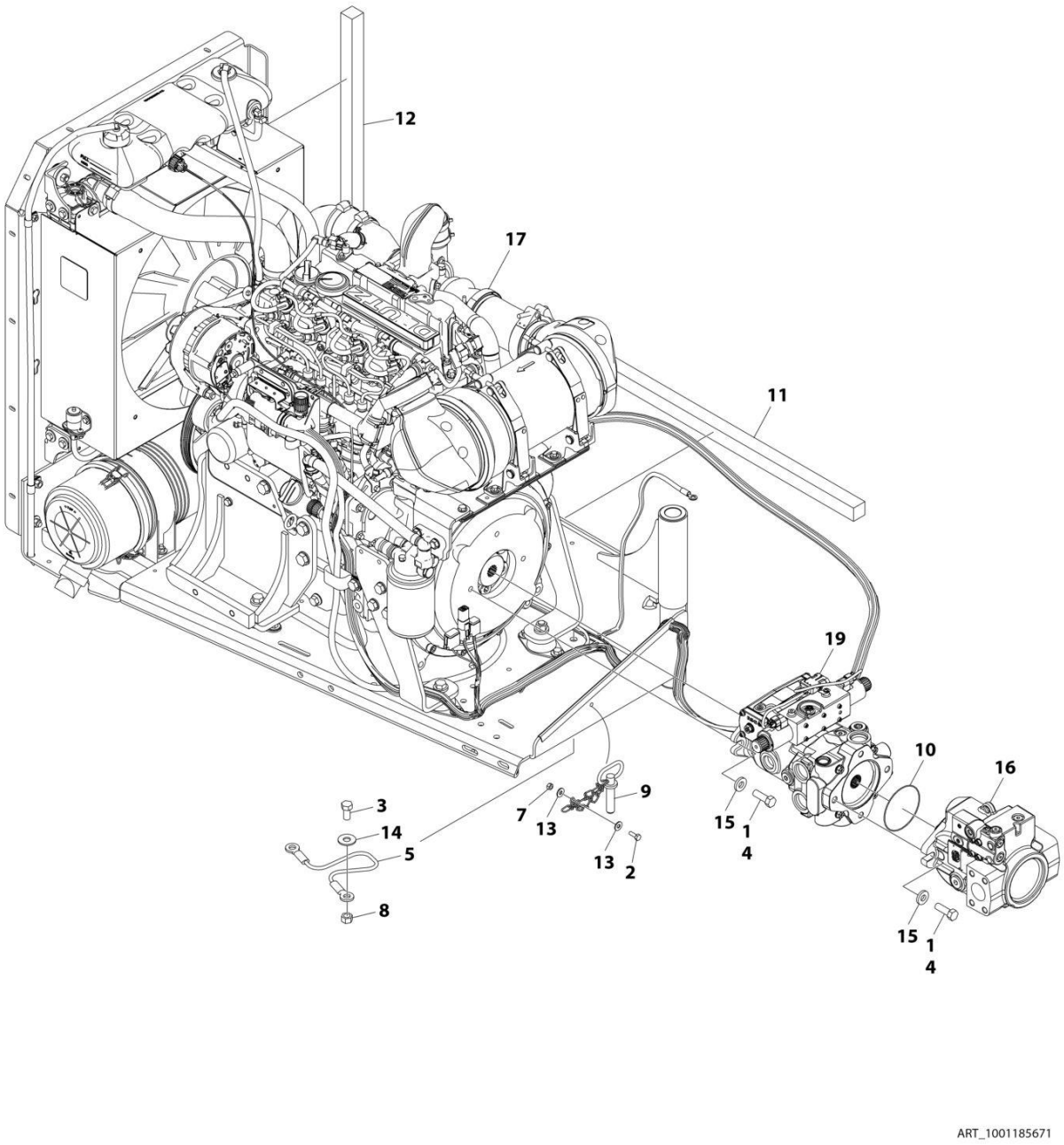

FIGURE 3-13. DEUTZ TD2.9L4 ENGINE AND PUMP SUB-ASSEMBLY (WITH ARCTIC PACKAGE)

ITEM	PART NUMBER	QTY	DESCRIPTION	REV
	1001185671	Ref	DEUTZ TD2.9L4 ENGINE AND PUMP SUB-ASSEMBLY (WITH ARCTIC PACKAGE)	H
1	0100011	AR	Compound, Locking	
2	0641406	1	Bolt 1/4 x 3/4	
3	0641808	1	Bolt 1/2 x 1	
4	0641812	4	Bolt 1/2 x 1-1/2	
5	1060637	1	Cable, Lanyard	
7	3311405	1	Nut 1/4	
8	3311801	1	Nut 1/2	
9	3422532	1	Pin, Hitch	
10	3790044	1	O-Ring	
11	3960468	1	Seal	
12	3960469	1	Seal	
13	4751400	2	Washer 1/4	
14	4751800	1	Washer 1/2	
15	4891800	4	Washer 1/2	
16	1001094595	1	Variable Pump Assembly with Fittings (See Separate Breakdown in this Section)	
17	1001176035	1	Engine Assembly With Arctic Package (See Separate Breakdown in this Section)	
19	1001225745	1	Hydrostatic Pump Assembly (See Separate Breakdown in this Section)	

FIGURE 3-14. DEUTZ TD2.9L4 ENGINE AND PUMP SUB-ASSEMBLY (STAGE V)

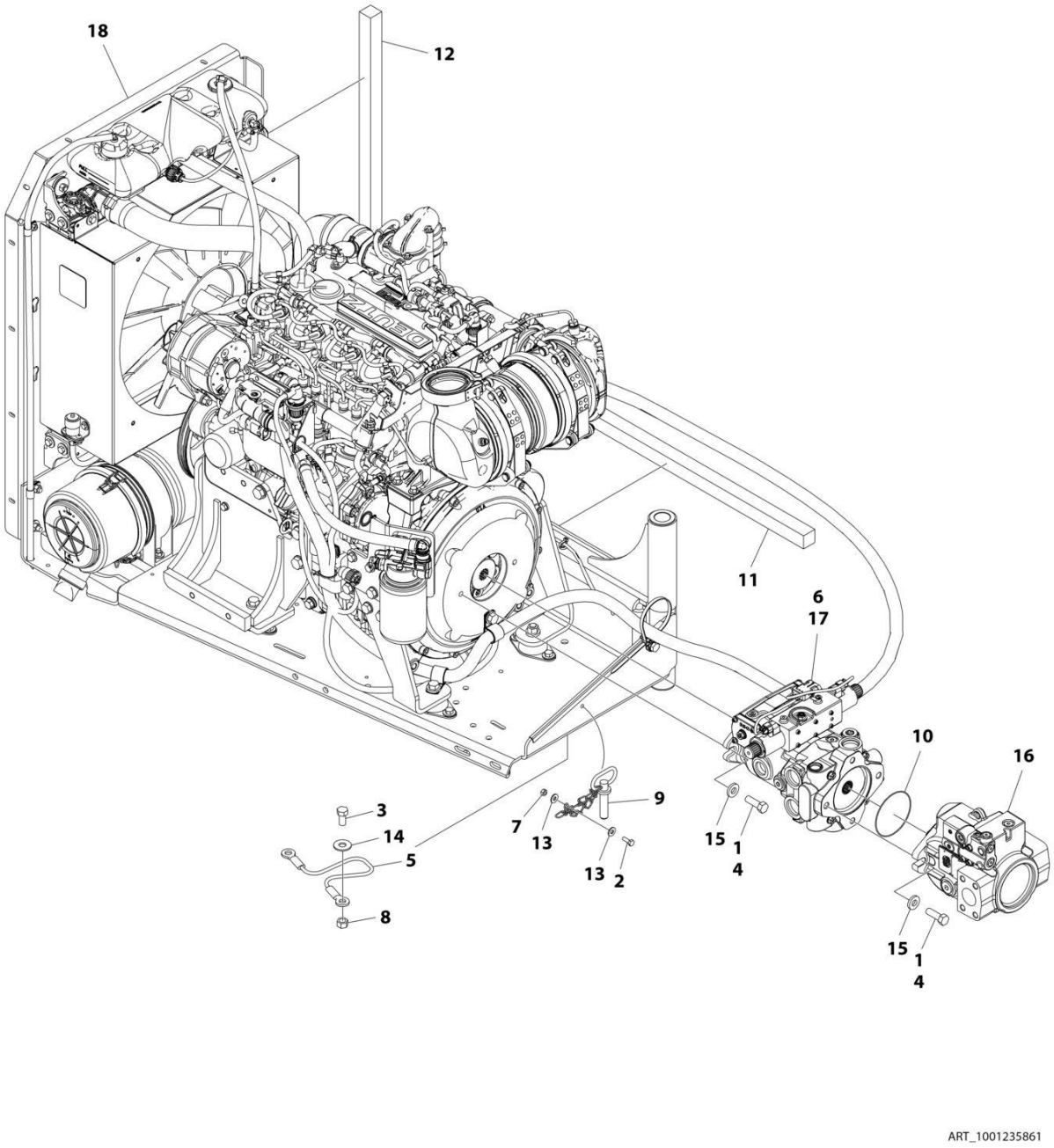

FIGURE 3-14. DEUTZ TD2.9L4 ENGINE AND PUMP SUB-ASSEMBLY (STAGE V)

ITEM	PART NUMBER	QTY	DESCRIPTION	REV
	1001235861	Ref	DEUTZ TD2.9L4 ENGINE AND PUMP SUB-ASSEMBLY (STAGE V)	B
1	0100011	AR	Compound, Locking	
2	0641406	1	Bolt 1/4 x 3/4	
3	0641808	1	Bolt 1/2 x 1	
4	0641812	4	Bolt 1/2 x 1-1/2	
5	1060637	1	Lanyard	
6	3020037	AR	Lubricant	
7	3311405	1	Nut 1/4	
8	3311801	1	Nut 1/2	
9	3422532	1	Pin, Hitch	
10	3790044	1	O-Ring	
11	3960468	1	Seal	
12	3960469	1	Seal	
13	4751400	2	Washer 1/4	
14	4751800	1	Washer 1/2	
15	4891800	4	Washer 1/2	
16	1001094595	1	Variable Pump Assembly with Fittings (See Separate Breakdown in this Section)	
17	1001225745	1	Hydrostatic Pump Assembly (See Separate Breakdown in this Section)	
18	1001235862	1	Engine Assembly - DEUTZ 2.9L4 (Stage V) Engines (See Separate Breakdown in this Section)	

FIGURE 3-15. DEUTZ TD2.9L4 ENGINE AND PUMP SUB-ASSEMBLY (CHINA III SPECS)

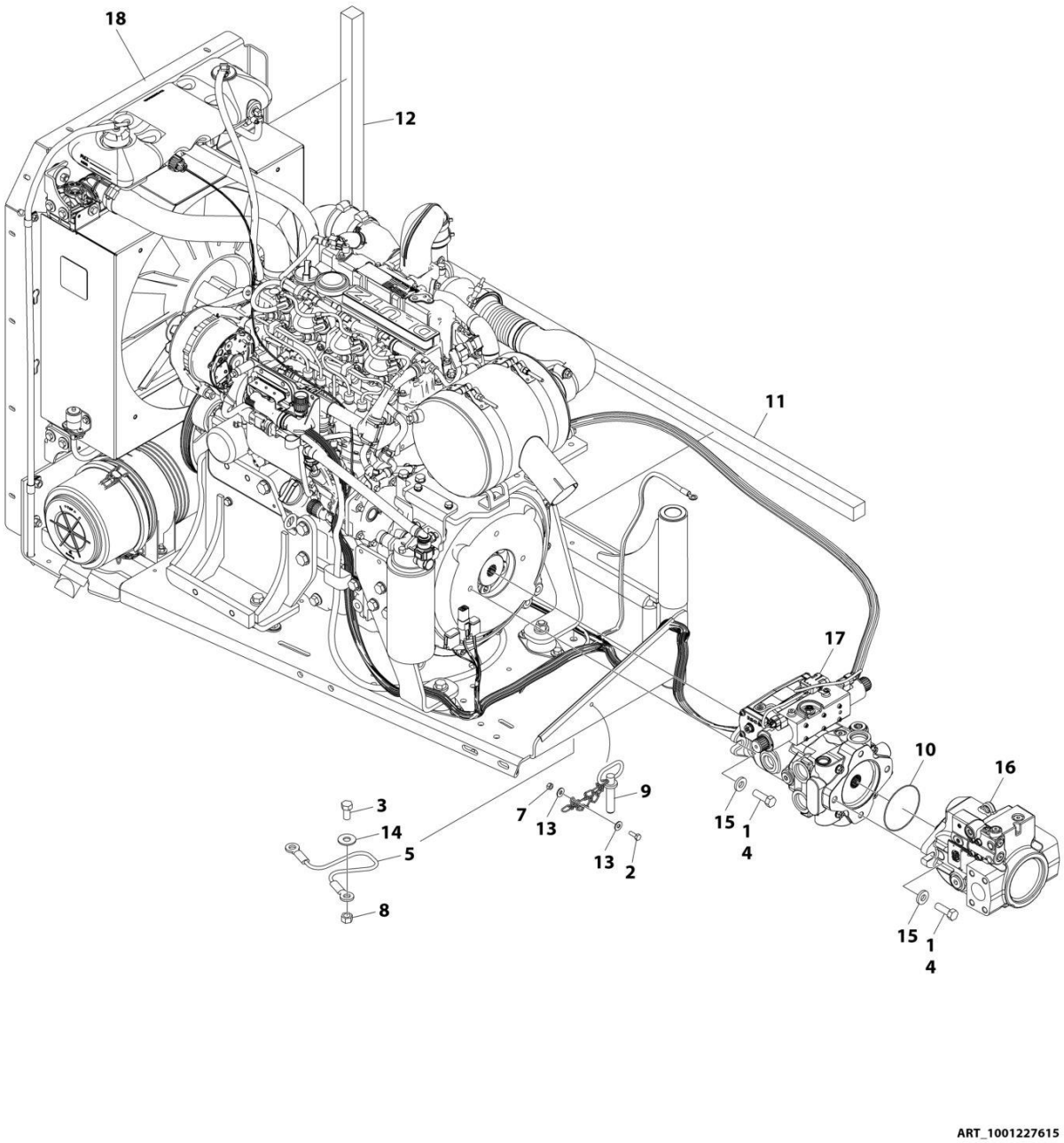

FIGURE 3-15. DEUTZ TD2.9L4 ENGINE AND PUMP SUB-ASSEMBLY (CHINA III SPECS)

ITEM	PART NUMBER	QTY	DESCRIPTION	REV
	1001227615	Ref	DEUTZ TD2.9L4 ENGINE AND PUMP SUB-ASSEMBLY	F
1	0100011	AR	Compound, Locking	
2	0641406	1	Bolt 1/4 x 3/4	
3	0641808	1	Bolt 1/2 x 1	
4	0641812	4	Bolt 1/2 x 1-1/2	
5	1060637	1	Lanyard	
7	3311405	1	Nut 1/4	
8	3311801	1	Nut 1/2	
9	3422532	1	Pin, Hitch	
10	3790044	1	O-Ring	
11	3960468	1	Seal	
12	3960469	1	Seal	
13	4751400	2	Washer 1/4	
14	4751800	1	Washer 1/2	
15	4891800	4	Washer 1/2	
16	1001094595	1	Variable Pump Assembly with Fittings (See Separate Breakdown in this Section)	
17	1001225745	1	Hydrostatic Pump Assembly (See Separate Breakdown in this Section)	
18	1001227614	1	Engine Assembly (See Separate Breakdown in this Section)	

FIGURE 3-16. DEUTZ TD2.9L4 ENGINE ASSEMBLY (WITHOUT ARCTIC PACKAGE)

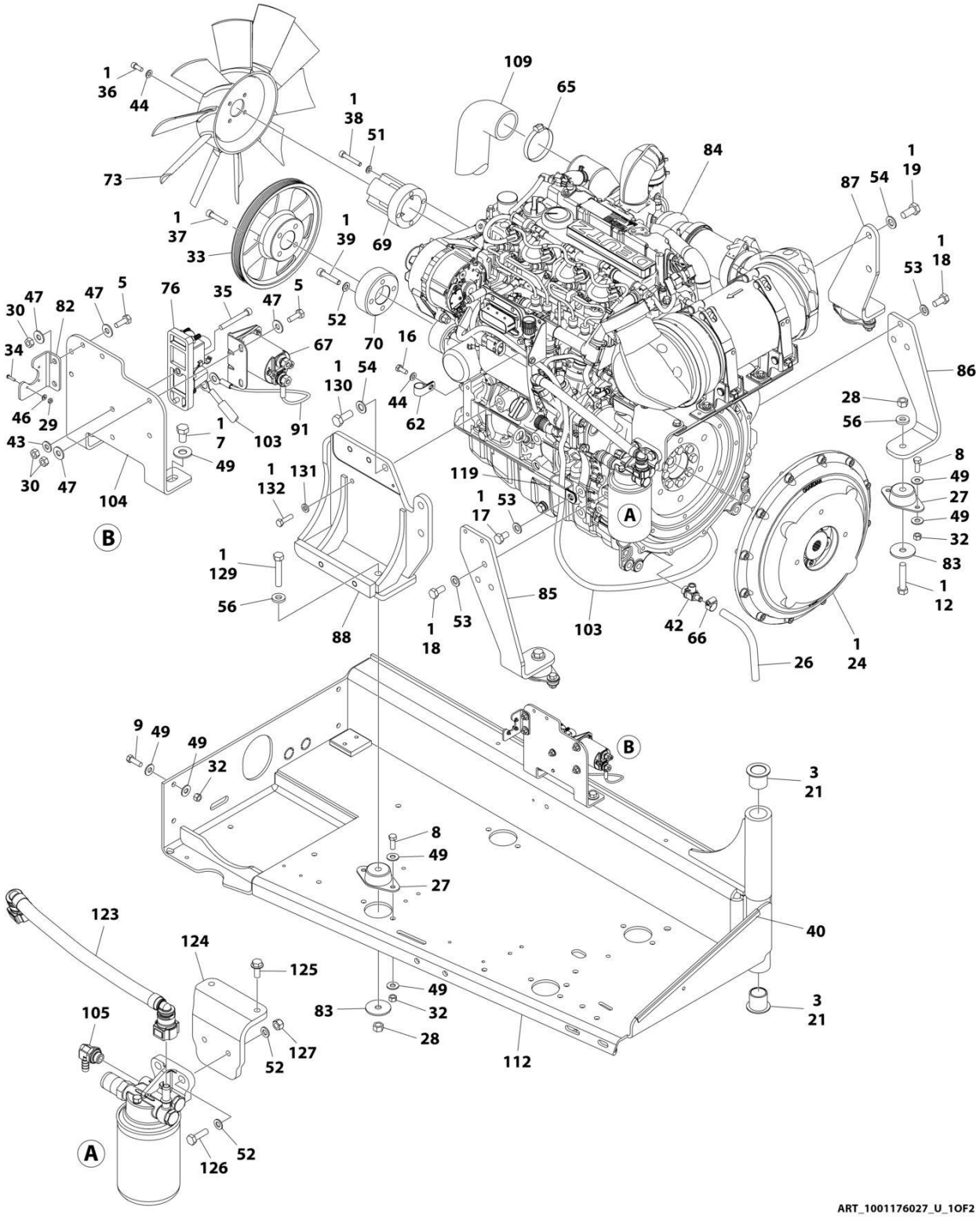

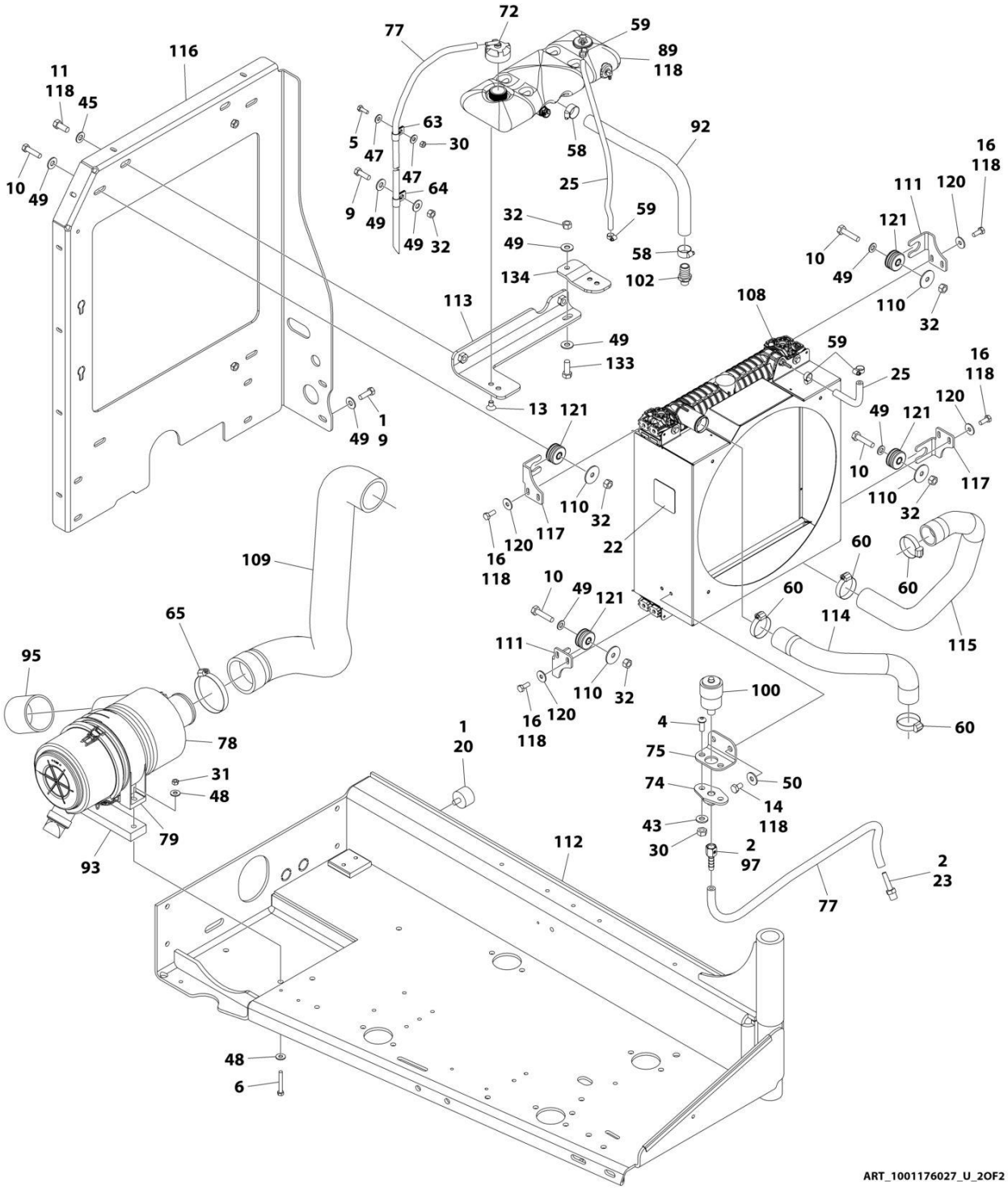

ART_1001176027_U_2OF2

FIGURE 3-16. DEUTZ TD2.9L4 ENGINE ASSEMBLY (WITHOUT ARCTIC PACKAGE)

ITEM	PART NUMBER	QTY	DESCRIPTION	REV
	1001176027	Ref	ENGINE ASSEMBLY WITHOUT ARCTIC PACKAGE	U
1	0100011	AR	Locking, Compound	
2	0100020	AR	Sealant	
3	0100062	2	Compound, Locking	
4	0630407	5	Screw 1/4 x 5/8	
5	0641406	2	Bolt 1/4 x 3/4	
6	0641518	2	Bolt 5/16 x 2-1/4	
7	0641605	8	Bolt 3/8 x 5/8	
8	0641608	6	Bolt 3/8 x 1	
9	0641609	4	Bolt 3/8 x 1-1/8	
10	0641612	2	Bolt 3/8 x 1-1/2	
11	0641708	3	Bolt 7/16 x 1	
12	0681820	2	Bolt 1/2 x 2-1/2	
13	0741605	2	Screw 3/8 x 5/8	
14	0760605	AR	Bolt M6 x 10	
16	0760810	9	Bolt M8 x 20	
17	0761210	1	Bolt M12 x 20	
18	0771212	6	Bolt M12 x 25	
19	0771414	2	Bolt M14 x 30	
20	0940070	1	Bumper	
21	0961986	2	Bushing, Flanged	
22	1703162	1	Decal - Caution Fan Blade	
23	2220315	1	Fitting, Straight Barbed	
24	1001153282	1	Pump Coupling Kit (See Separate Breakdown in this section)	
25	2720015	40 in/1m	Hose	
26	2720340	12 in /30.5cm	Hose	
27	3200401	4	Mount, Motor	
28	3271801	4	Nut 1/2-13	
29	3310401	3	Nut #4	
30	3311405	8	Nut 1/4	
31	3311505	2	Locknut 5/16	
32	3311605	17	Nut 3/8	
33	3580320	1	Pulley	
34	3910408	3	Screw #4 x 1/2	
35	3931432	1	Capscrew 1/4 x 2	
36	3931512	4	Capscrew 5/16 x 3/4	
37	3931628	4	Capscrew 3/8 x 1-3/4	
38	4031914	4	Capscrew M8 x 50	
39	4032014	4	Capscrew M10 x 50	
40	4060805	15 in /38cm	Flex-Trim	
41	4240099	AR	Tie-Strap (Not Shown)	
42	4640751	1	Valve, Oil Drain	
43	4711400	3	Washer 1/4	
44	4711500	5	Washer 5/16	
45	4711700	2	Washer 7/16	
46	4750400	3	Washer #4	
47	4751400	10	Washer 1/4	
48	4751500	4	Washer 5/16	

ITEM	PART NUMBER	QTY	DESCRIPTION	REV
49	4751600	34	Washer 3/8	
50	4811702	2	Washer M6	
51	4811900	4	Washer M8	
52	4812000	8	Washer M10	
53	4812100	7	Washer M12	
54	4812200	5	Washer M14	
56	4891800	4	Washer 1/2	
58	8405007	2	Clamp	
59	8405009	4	Clamp	
60	8405104	4	Clamp	
62	8406102	1	Clip	
63	8406109	1	Clip	
64	8406110	1	Clip	
65	8410011	2	Clamp	
66	8410013	1	Clamp	
67	1001117308	1	Relay	
69	1001135138	1	Adapter	
70	1001135679	1	Adapter	
72	1001136834	1	Cap, Tank	
73	1001137276	1	Fan	
74	1001138173	1	Support	
75	1001138175	1	Bracket	
76	1001138228	1	Relay, Power Module	
76	70023593	1	Fuse 30Amp (Battery Output)	
76	70023592	1	Fuse 20Amp (Switch Output)	
77	1001138248	62 in/1.6m	Tube	
78	1001138489	1	Air Cleaner Assembly	
78	91403102	1	Element, Filter	
79	1001138557	1	Clamp	
82	1001139240	1	Bracket	
83	1001139409	4	Washer, Special	
84	1001249942	1	Engine, Deutz TD2.9L4 T4F (See Separate Breakdown in this Section)	
85	1001140448	1	Mount, Rear Engine	
86	1001140450	1	Mount, Rear Engine	
87	1001140454	1	Mount, Front Engine	
88	1001202368	1	Mount, Generator/Engine	
89	1001230635	1	Tank	
89	0100020	AR	Sealant, Pipe	
89	1001134488	1	Fitting, 90 NPT/ Barbed	
89	1001138827	1	Sensor, Coolant Level	
89	1001140564	1	Fitting, 90 NPT/ Barbed	
89	1001229542	1	Tank, Surge	
91	1001141304	1	Harness, Glow Plug	
92	1001141370	1	Hose	
93	1001267256	1	Shim	
95	1001141585	1	Hose, Inlet	
97	1001141995	1	Fitting, Straight NPT/Barbed	
100	1001143390	1	Indicator, Service	
101	1001143726	1	Harness, Deutz Engine (Not Shown - See Separate Breakdown in ELECTRICAL Section)	
102	1001143797	1	Fitting, Straight Metric/Barbed	

ITEM	PART NUMBER	QTY	DESCRIPTION	REV
103	1001143907	1	Cable, Alternator Power	
104	1001145154	1	Plate, Relay Mounting	
105	1001152489	1	Fitting, 90 Metric/ Barbed	
108	1001167042	1	Radiator	
109	1001266525	1	Hose	
110	1001169138	4	Washer	
111	1001204325	2	Bracket, Radiator	
112	1001190610	1	Tray	
113	1001260413	1	Bracket, Tank	
114	1001177844	1	Hose, Radiator - Upper	
115	1001177845	1	Hose, Radiator - Lower	
116	1001186985	1	Plate, Mounting (Modine Radiator)	
117	1001178223	2	Bracket, Radiator	
118	1001180620	1	Adhesive	
119	1001181899	1	P-Clamp	
120	4811902	8	Washer M8	
121	1001169054	4	Pad, Isolator	
123	1001177359	1	Hose	
124	1001178876	1	Mount, Fuel Filter	
125	5250810	2	Bolt M8 x 20	
126	0761015	2	Bolt M10 x 35	
127	3291005	2	Nut M10	
129	0681822	1	Bolt 1/2 x 2-3/4 Grade 8	
130	0771415	3	Bolt M14 x 35 Grade 10.9	
131	5240800	1	Washer M8	
132	0700814	1	Bolt M8 x 30	
133	0681608	1	Bolt 3/8 x 1 Grade 8	
134	1001260412	1	Bracket	
135	1001162335	1	Bracket, Fuel Pump/Filter Assy (Not Shown - See Separate Breakdown in this Section)	

FIGURE 3-17. DEUTZ TD2.9L4 ENGINE ASSEMBLY (WITH ARCTIC PACKAGE)

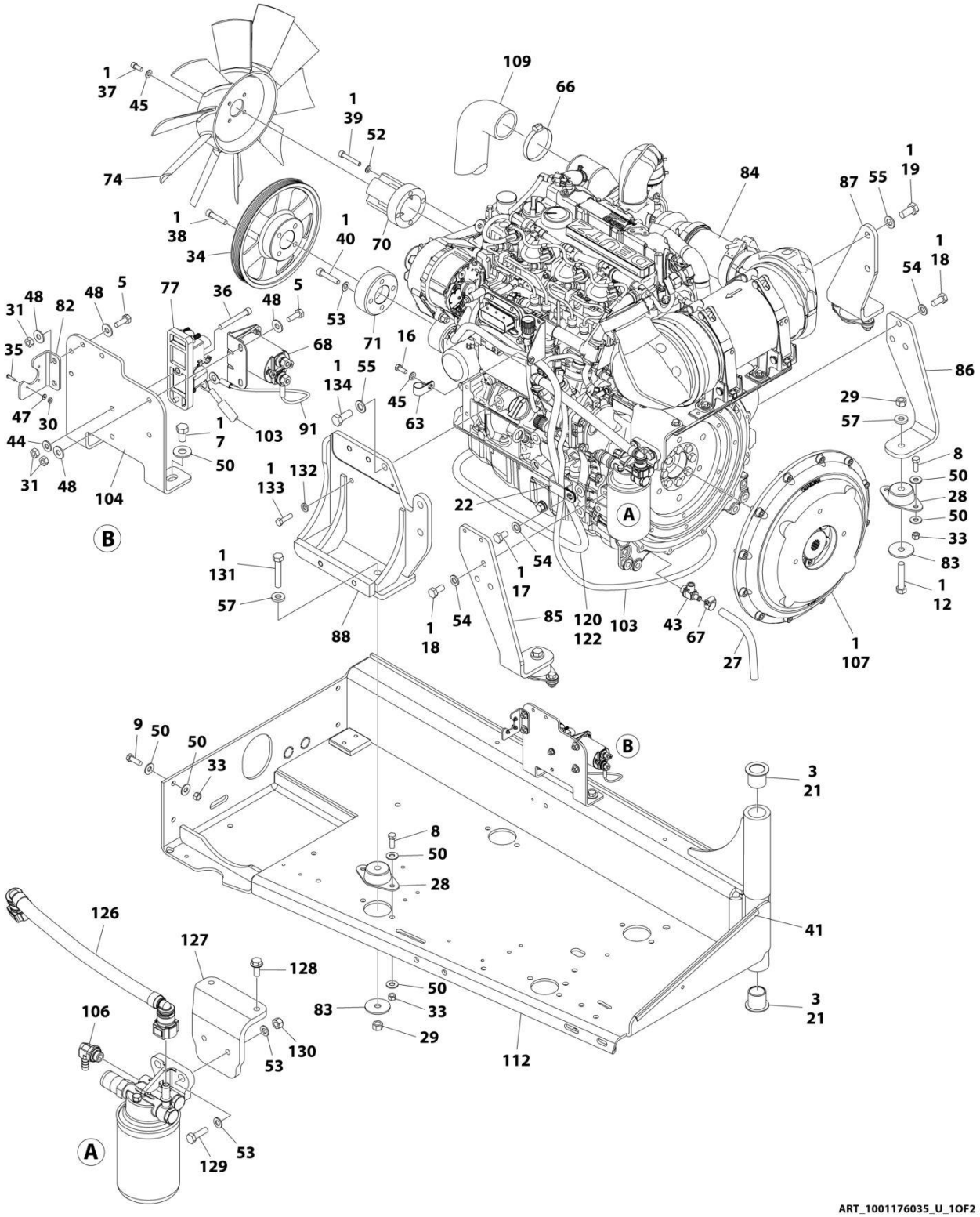

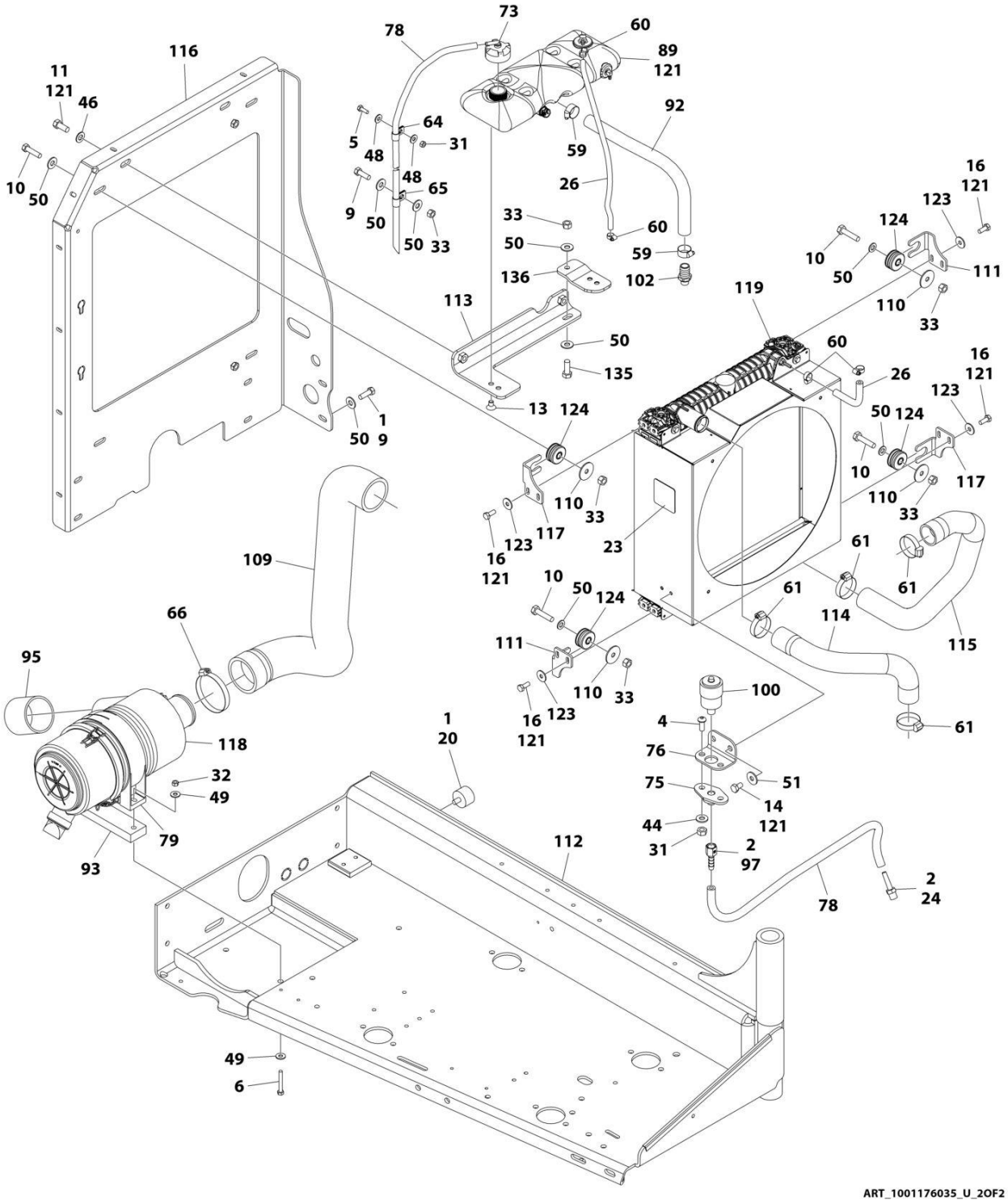
73
78
60
89
121
116
11
121
46
92
64
5
48
31
59
10
50
48
65
26
9
50
50
33
33
60
59
50
136
102
16
121
123
124
10
50
111
110
33
119
113
50
60
135
26
16
121
123
13
124
50
124
1
50
9
10
117
110
110
33
33
117
123
16
121
23
109
10
50
124
61
61
61
114
115
66
111
95
110
33
100
16
123
121
1
20
4
61
118
76
32
51
75
49
14
121
44
79
112
31
2
97
93
2
24
78
49
6
ART_1001176035_U_2OF2

FIGURE 3-17. DEUTZ TD2.9L4 ENGINE ASSEMBLY (WITH ARCTIC PACKAGE)

ITEM	PART NUMBER	QTY	DESCRIPTION	REV
	1001176035	Ref	DEUTZ TD2.9L4 ENGINE ASSEMBLY (WITH ARCTIC PACKAGE)	U
1	0100011	AR	Locking, Compound	
2	0100020	AR	Sealant	
3	0100062	2	Compound, Locking	
4	0630407	5	Screw 1/4 x 5/8	
5	0641406	2	Bolt 1/4 x 3/4	
6	0641518	2	Bolt 5/16 x 2-1/4	
7	0641605	8	Bolt 3/8 x 5/8	
8	0641608	6	Bolt 3/8 x 1	
9	0641609	4	Bolt 3/8 x 1-1/8	
10	0641612	2	Bolt 3/8 x 1-1/2	
11	0641708	3	Bolt 7/16 x 1	
12	0681820	2	Bolt 1/2 x 2-1/2 Grade 8	
13	0741605	2	Screw 3/8 x 5/8	
14	0760605	2	Bolt M6 x 10	
16	0760810	9	Bolt M8 x 20	
17	0761210	1	Bolt M12 x 20	
18	0771212	6	Bolt M12 x 25 Grade 10.9	
19	0771414	2	Bolt M14 x 30 Grade 10.9	
20	0940070	1	Bumper	
21	0961986	2	Bushing, Flanged	
22	1001181899	1	P-Clamp	
23	1703162	1	Decal - Caution Fan Blade	
24	2220315	1	Fitting, Straight Barbed	
26	2720015	40 in/1m	Hose	
27	2720340	12 in /30.5cm	Hose	
28	3200401	4	Mount, Motor	
29	3271801	4	Nut 1/2	
30	3310401	3	Nut #4	
31	3311405	8	Nut 1/4	
32	3311505	2	Nut 5/16	
33	3311605	17	Nut 3/8	
34	3580320	1	Pulley	
35	3910408	3	Screw #4 x 1/2	
36	3931432	1	Capscrew 1/4 x 2	
37	3931512	4	Capscrew 5/16 x 3/4	
38	3931628	4	Capscrew 3/8 x 1-3/4	
39	4031914	4	Capscrew M8 x 50	
40	4032014	4	Capscrew M10 x 50	
41	4060805	15 in /38cm	Flex-Trim	
42	4240099	AR	Tie-Strap (Not Shown)	
43	4640751	1	Valve, Oil Drain	
44	4711400	3	Washer 1/4	
45	4711500	5	Washer 5/16	
46	4711700	2	Washer 7/16	
47	4750400	3	Washer #4	
48	4751400	10	Washer 1/4	
49	4751500	4	Washer 5/16	

ITEM	PART NUMBER	QTY	DESCRIPTION	REV
50	4751600	34	Washer 3/8	
51	4811702	2	Washer M6	
52	4811900	4	Washer M8	
53	4812000	8	Washer M10	
54	4812100	7	Washer M12	
55	4812200	5	Washer M14	
57	4891800	4	Washer 1/2	
59	8405007	2	Clamp	
60	8405009	4	Clamp	
61	8405104	4	Clamp	
63	8406102	1	Clip	
64	8406109	1	Clip	
65	8406110	1	Clip	
66	8410011	2	Clamp	
67	8410013	1	Clamp	
68	1001117308	1	Relay	
70	1001135138	1	Adapter	
71	1001135679	1	Adapter	
73	1001136834	1	Cap, Tank	
74	1001137276	1	Fan	
75	1001138173	1	Support	
76	1001138175	1	Bracket	
77	1001138228	1	Relay, Power Module	
77	70023592	1	Fuse 20Amp (Switch Output)	
77	70023593	1	Fuse 30Amp (Battery Output)	
78	1001138248	62 in/1.6m	Tube	
79	1001138557	1	Clamp	
82	1001139240	1	Bracket	
83	1001139409	4	Washer, Special	
84	1001249942	1	Engine, Deutz TD2.9L4 T4F (See Separate Breakdown in this Section)	
85	1001140448	1	Mount, Rear Engine	
86	1001140450	1	Mount, Rear Engine	
87	1001140454	1	Mount, Front Engine	
88	1001202368	1	Mount, Generator/Engine	
89	1001230635	1	Tank	
89	0100020	1	Sealant	
89	1001134488	1	Fitting, 90 NPT/ Barbed	
89	1001138827	1	Sensor, Coolant Level	
89	1001140564	1	Fitting, 90 NPT/ Barbed	
89	1001229542	1	Tank, Surge	
91	1001141304	1	Harness, Glow Plug	
92	1001141370	1	Hose	
93	1001267256	1	Shim	
95	1001141585	1	Hose, Inlet	
97	1001141995	1	Fitting, Straight NPT/Barbed	
100	1001143390	1	Indicator, Service	
101	1001143726	1	Harness, Deutz Engine (Not Shown - See Separate Breakdown in ELECTRICAL Section)	
102	1001143797	1	Fitting, Straight Metric/Barbed	
103	1001143907	1	Cable, Alternator Power	
104	1001145154	1	Plate, Relay Mounting	

ITEM	PART NUMBER	QTY	DESCRIPTION	REV
106	1001152489	1	Fitting, 90 Metric/ Barbed	
107	1001153282	1	Pump Coupling Kit (See Separate Breakdown in this Section)	
109	1001266525	1	Pipe	
110	1001169138	4	Washer	
111	1001204325	2	Bracket, Radiator	
112	1001190610	1	Tray	
113	1001260413	1	Bracket, Tank	
114	1001177844	1	Hose, Radiator - Upper	
115	1001177845	1	Hose, Radiator - Lower	
116	1001186985	1	Plate, Mounting	
117	1001178223	2	Bracket, Radiator	
118	1001138489	1	Air Cleaner Assembly	
118	91403102	1	Element, Filter	
119	1001167042	1	Radiator	
120	1001140312	1	Heater, Engine Block	
121	1001180620	1	Adhesive	
122	1001181895	1	Adhesive	
123	4811902	8	Washer M8	
124	1001169054	4	Pad, Isolator	
126	1001177359	1	Hose	
127	1001178876	1	Mount, Fuel Filter	
128	5250810	2	Bolt M8 x 20	
129	0761015	2	Bolt M10 x 35	
130	3291005	2	Nut M10	
131	0681822	1	Bolt 1/2 x 2-3/4 Grade 8	
132	5240800	1	Washer M8	
133	0700814	1	Bolt M8 x 30	
134	0771415	3	Bolt M14 x 35 Grade 10.9	
135	0681608	1	Bolt 3/8 x 1 Grade 8	
136	1001260412	1	Bracket	
137	1001162335	1	Bracket, Fuel Pump/Filter Assy (Not Shown - See Separate Breakdown in this Section)	

FIGURE 3-18. DEUTZ TD2.9L4 ENGINE ASSEMBLY (STAGE V)

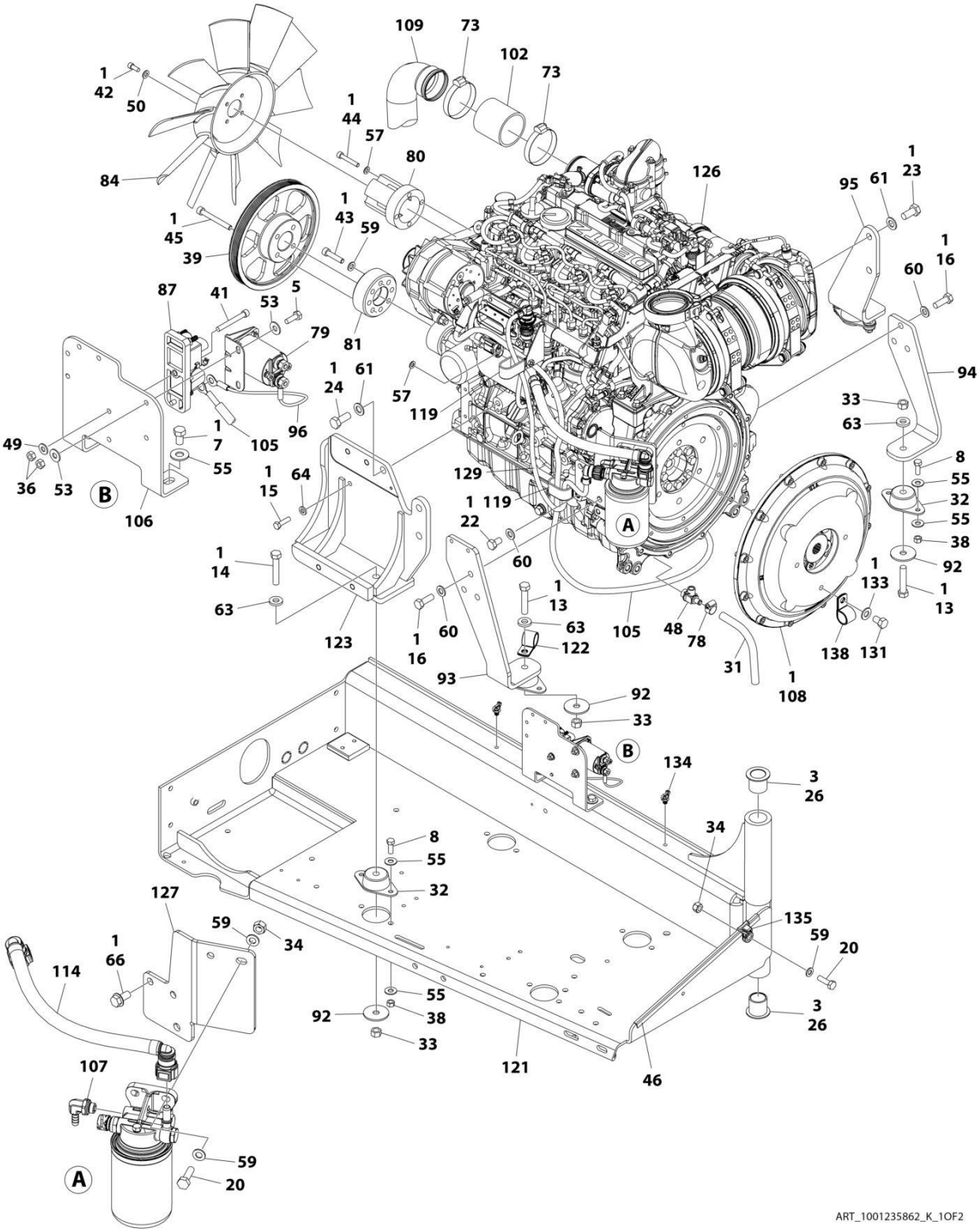

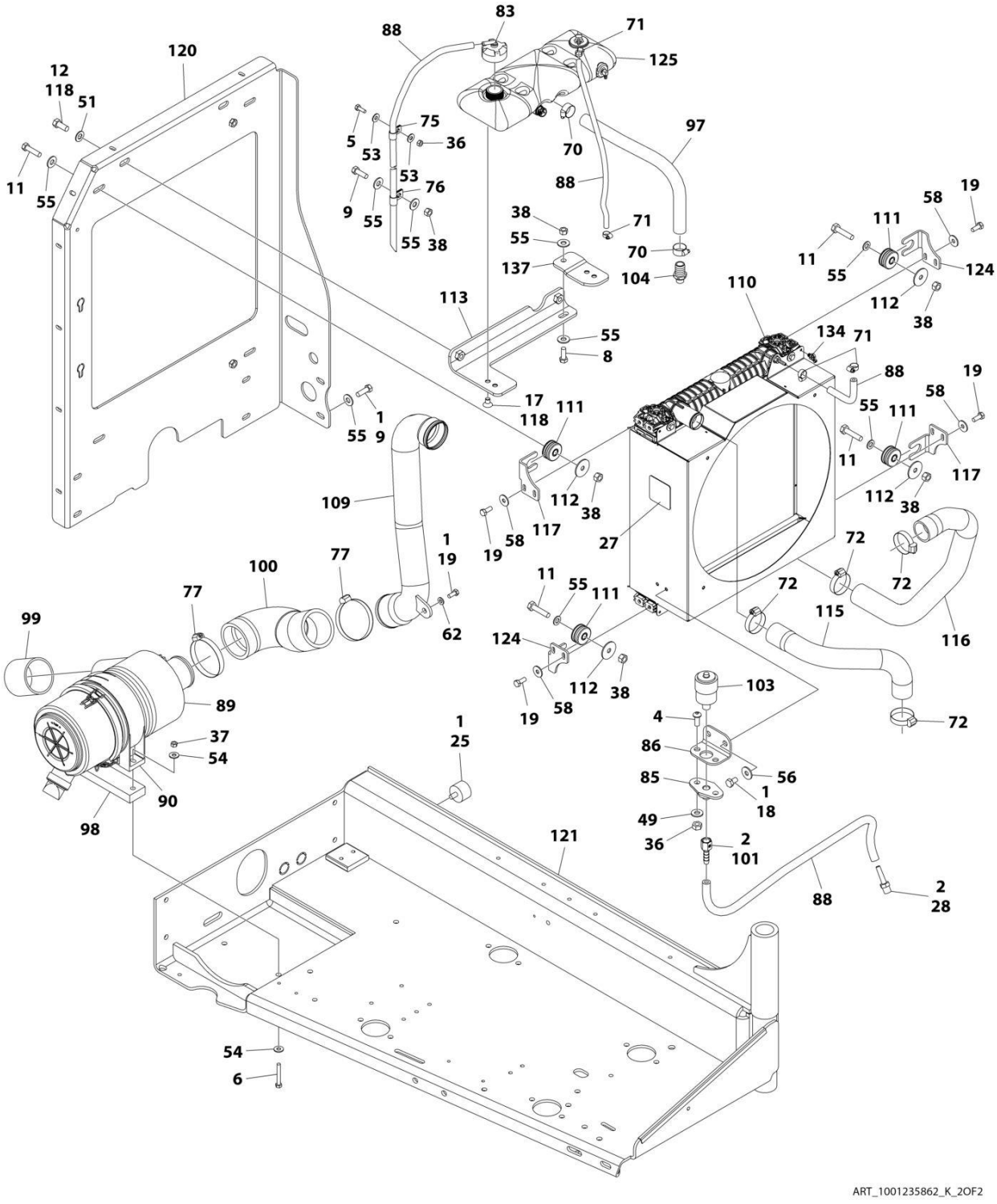

ART_1001235862_K_2OF2

FIGURE 3-18. DEUTZ TD2.9L4 ENGINE ASSEMBLY (STAGE V)

ITEM	PART NUMBER	QTY	DESCRIPTION	REV
	1001235862	Ref	DEUTZ TD2.9L4 ENGINE ASSEMBLY (STAGE V)	K
1	0100011	AR	Locking, Compound	
2	0100020	AR	Sealant	
3	0100062	AR	Compound, Locking	
4	0630407	2	Screw 1/4 x 5/8	
5	0641406	3	Bolt 1/4 x 3/4	
6	0641518	2	Bolt 5/16 x 2-1/4	
7	0641605	2	Bolt 3/8 x 5/8	
8	0641608	9	Bolt 3/8 x 1	
9	0641609	6	Bolt 3/8 x 1-1/8	
11	0641612	4	Bolt 3/8 x 1-1/2	
12	0641708	2	Bolt 7/16 x 1	
13	0681820	3	Bolt 1/2 x 2-1/2 Grade 8	
14	0681822	1	Bolt 1/2 x 2-3/4 Grade 8	
15	0700814	1	Bolt M8 x 30	
16	0711215	6	Bolt M12 x 35	
17	0741605	2	Screw 3/8 x 5/8	
18	0760605	2	Bolt M6 x 10	
19	0760810	9	Bolt M8 x 20	
20	0761015	3	Bolt M10 x 35	
22	0761210	1	Bolt M12 x 20	
23	0771414	2	Bolt M14 x 30 Grade 10.9	
24	0771415	3	Bolt M14 x 35 Grade 10.9	
25	0940070	1	Bumper	
26	0961986	2	Bushing, Flanged	
27	1703162	1	Decal - Caution Fan Blade	
28	2220315	1	Fitting, Straight Barbed	
31	2720340	12 in /30.5cm	Hose	
32	3200401	4	Mount, Motor	
33	3271801	4	Nut 1/2 Grade 8	
34	3291005	3	Nut M10	
36	3311405	6	Nut 1/4	
37	3311505	2	Nut 5/16	
38	3311605	17	Nut 3/8	
39	1001260432	1	Pulley	
41	3931432	1	Capscrew 1/4 x 2	
42	3931512	4	Capscrew 5/16 x 3/4	
43	1001261045	4	Capscrew M10 x 45	
44	4031914	4	Capscrew M8 x 50	
45	1001261085	4	Capscrew M10 x 85	
46	4060805	15 in /38cm	Flex-Trim	
47	4240099	AR	Tie-Strap (Not Shown)	
48	4640751	1	Valve, Oil Drain	
49	4711400	3	Washer 1/4	
50	4711500	4	Washer 5/16	
51	4711700	2	Washer 7/16	
53	4751400	6	Washer 1/4	
54	4751500	4	Washer 5/16	

ITEM	PART NUMBER	QTY	DESCRIPTION	REV
55	4751600	34	Washer 3/8	
56	4811702	2	Washer M6	
57	4811900	5	Washer M8	
58	4811902	8	Washer M8	
59	4812000	10	Washer M10	
60	4812100	7	Washer M12	
61	4812200	5	Washer M14	
62	4891500	1	Washer 5/16	
63	4891800	4	Washer 1/2	
64	5240800	1	Washer M8	
66	5251010	2	Bolt M10 x 20	
70	8405007	2	Clamp	
71	8405009	4	Clamp	
72	8405104	4	Clamp	
73	8405204	2	Clamp	
75	8406109	1	Clip	
76	8406110	1	Clip	
77	8410011	2	Clamp	
78	8410013	1	Clamp	
79	1001117308	1	Relay	
80	1001135138	1	Adapter	
81	1001258800	1	Adapter	
83	1001136834	1	Cap, Tank	
84	1001137276	1	Fan	
85	1001138173	1	Support	
86	1001138175	1	Bracket	
87	1001138228	1	Relay, Power Module	
87	70023593	1	Fuse 30Amp (Battery Output)	
87	70023592	1	Fuse 20Amp (Switch Output)	
88	1001138248	90 in/2.3m	Tube	
89	1001138489	1	Air Cleaner Assembly	
89	91403102	1	Element, Filter	
90	1001138557	1	Clamp	
92	1001139409	4	Washer, Special	
93	1001140448	1	Mount, Rear Engine	
94	1001140450	1	Mount, Rear Engine	
95	1001140454	1	Mount, Front Engine	
96	1001141304	1	Harness, Glow Plug	
97	1001141370	1	Hose	
98	1001141419	1	Shim	
99	1001141585	1	Hose, Inlet	
100	1001141586	1	Pipe, Intake	
101	1001141995	1	Fitting, Straight NPT/Barbed	
102	1001142623	1	Hose, Inlet	
103	1001143390	1	Indicator, Service	
104	1001143797	1	Fitting, Straight Metric/Barbed	
105	1001143907	1	Cable, Alternator Power	
106	1001145154	1	Plate, Relay Mounting	
107	1001152489	1	Fitting, 90 Metric/ Barbed	
109	1001165842	1	Pipe	
110	1001167042	1	Radiator (Modine Radiator)	

ITEM	PART NUMBER	QTY	DESCRIPTION	REV
111	1001169054	4	Pad, Isolator	
112	1001169138	4	Washer	
113	1001260413	1	Bracket, Tank	
114	1001177359	1	Hose	
115	1001177844	1	Hose, Radiator - Upper	
116	1001177845	1	Hose, Radiator - Lower	
117	1001178223	2	Bracket, Radiator	
118	1001180620	AR	Adhesive	
119	1001181899	2	P-Clamp	
120	1001186985	1	Plate, Mounting	
121	1001190610	1	Tray	
122	1001191620	1	Clamp	
123	1001202368	1	Mount, Generator/Engine	
124	1001204325	2	Bracket, Radiator	
125	1001230635	1	Tank	
125	0100020	1	Sealant, Pipe	
125	1001134488	1	Fitting, 90 NPT/ Barbed	
125	1001138827	1	Sensor, Coolant Level	
125	1001140564	1	Fitting, 90 NPT/ Barbed	
125	1001229542	1	Tank, Surge	
126	1001232844	1	Engine, Deutz TD2.9L4 (Stage V) (See Separate Breakdown in this Section)	
127	1001238268	1	Mount, Fuel Filter	
128	1001238878	1	Harness, Deutz TD2.9L4 (Stage V) Engine (Not Shown - See Separate Breakdown in ELECTRICAL Section)	
129	1001245913	1	Harness, Deutz TD2.9L4 (Stage V) Engine Fuel Filter (See Separate Breakdown in ELECTRICAL Section)	
131	0641806	1	Bolt 1/2 x 3/4	
133	4711800	1	Washer 1/2	
134	1001146588	3	Strap	
135	1001156107	1	Holder, Cable	
136	1001235949	1	Bracket, Fuel Pump/Filter Assy (Not Shown - See Separate Breakdown in this Section)	
137	1001260412	1	Bracket, Surge Tank	
138	85031405	1	Clamp	

FIGURE 3-19. DEUTZ TD2.9L4 ENGINE ASSEMBLY (CHINA III SPECS)

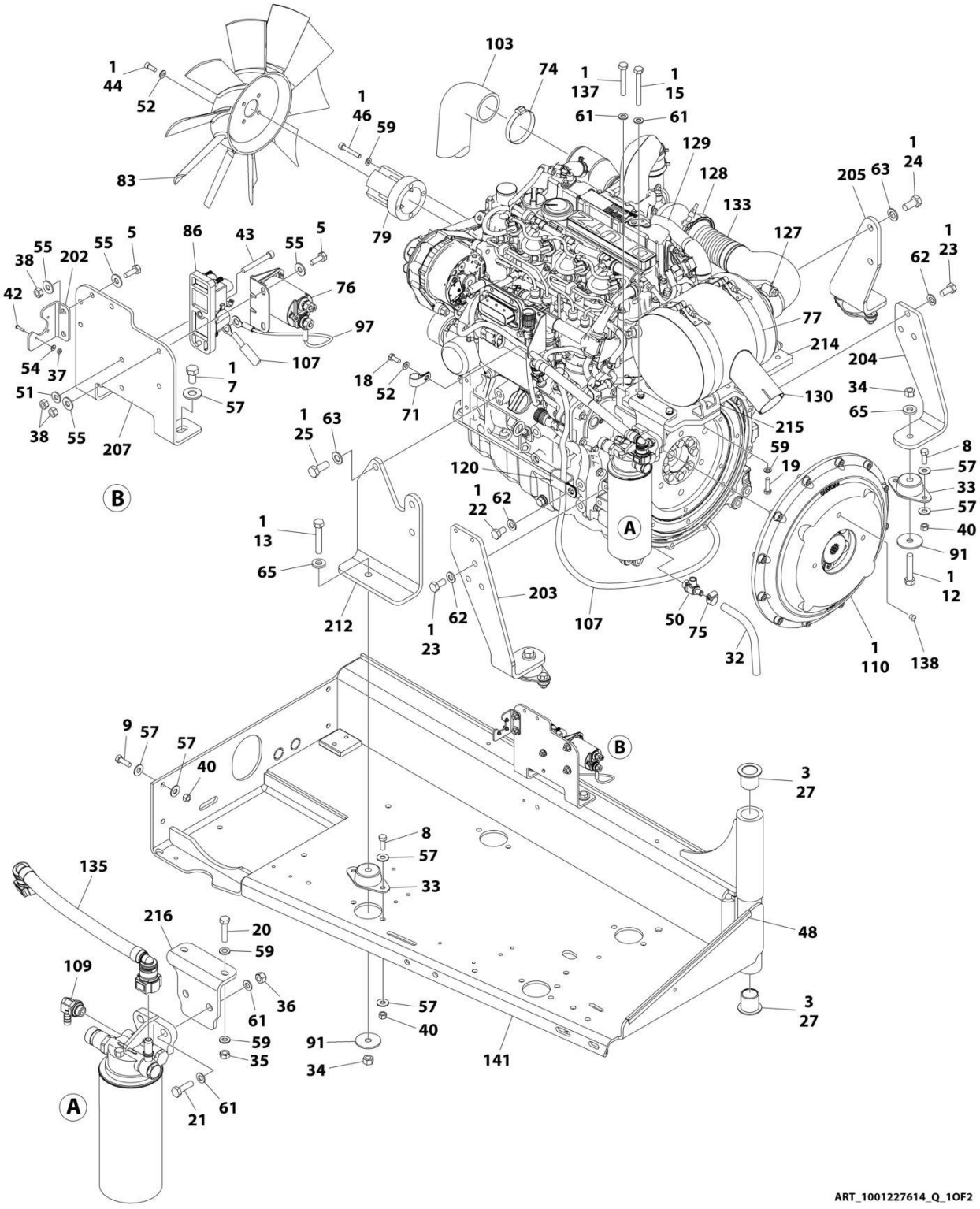

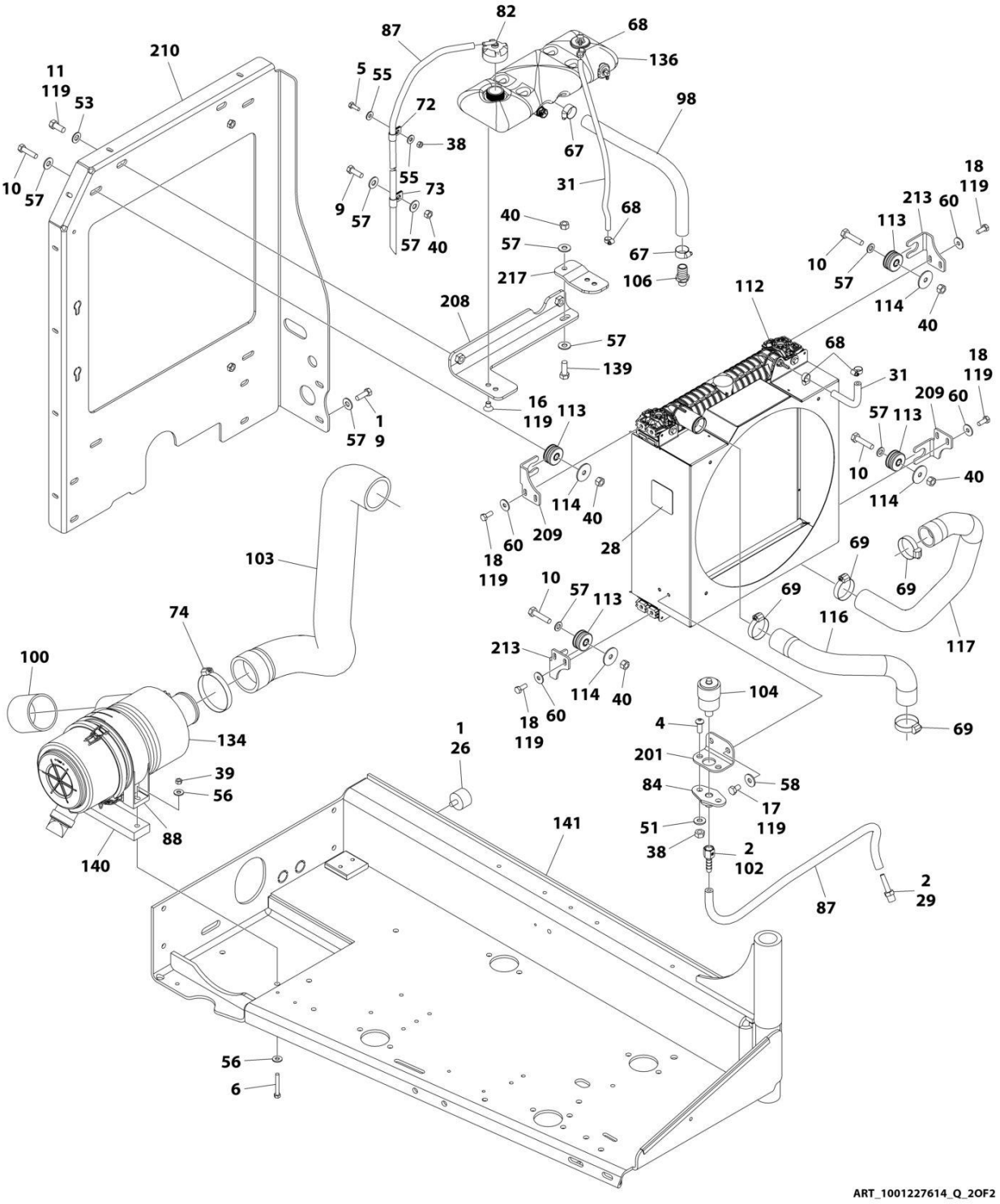
82
87
68
136
210
11
119
53
5
55
72
98
38
67
10
57
55
73
31
18
119
213
60
9
57
40
68
113
57
67
10
217
106
57
112
208
114
40
57
68
139
18
119
31
16
119
113
209
60
1
57
9
57
113
10
40
114
114
40
209
28
18
60
119
69
103
10
57
113
69
69
74
116
117
213
100
114
40
104
18
60
119
4
69
134
1
26
201
39
84
58
56
17
119
141
51
88
38
2
102
140
2
29
87
56
6
ART_1001227614_Q_2OF2

FIGURE 3-19. DEUTZ TD2.9L4 ENGINE ASSEMBLY (CHINA III SPECS)

ITEM	PART NUMBER	QTY	DESCRIPTION	REV
	1001227614	Ref	DEUTZ TD2.9L4 ENGINE ASSEMBLY	Q
1	0100011	AR	Compound, Locking	
2	0100020	AR	Sealant	
3	0100062	AR	Compound, Locking	
4	0630407	2	Screw 1/4 x 5/8	
5	0641406	5	Bolt 1/4 x 3/4	
6	0641518	2	Bolt 5/16 x 2-1/4	
7	0641605	2	Bolt 3/8 x 5/8	
8	0641608	8	Bolt 3/8 x 1	
9	0641609	6	Bolt 3/8 x 1-1/8	
10	0641612	4	Bolt 3/8 x 1-1/2	
11	0641708	2	Bolt 7/16 x 1	
12	0681820	3	Bolt 1/2 x 2-1/2 Grade 8	
13	0681822	1	Bolt 1/2 x 2-3/4 Grade 8	
15	0701025	2	Bolt M10 x 85	
16	0741605	2	Screw 3/8 x 5/8	
17	0760605	2	Bolt M6 x 10	
18	0760810	10	Bolt M8 x 20	
19	0760814	4	Bolt M8 x 30	
20	0760815	2	Bolt M8 x 35	
21	0761015	2	Bolt M10 x 35	
22	0761210	1	Bolt M12 x 20	
23	0771212	6	Bolt M12 x 25 Grade 10.9	
24	0771414	2	Bolt M14 x 30 Grade 10.9	
25	0771415	3	Bolt M14 x 35	
26	0940070	1	Bumper	
27	0961986	2	Bushing, Flanged	
28	1703162	1	Decal - Caution Fan Blade	
29	2220315	1	Fitting, Straight Barbed	
31	2720015	2.32 ft /0.71m	Hose	
32	2720340	1 ft /0.31m	Hose	
33	3200401	4	Mount, Motor	
34	3271801	4	Nut 1/2	
35	3290801	2	Nut M8	
36	3291005	2	Nut M10	
37	3310401	3	Nut #4	
38	3311405	8	Nut 1/4	
39	3311505	2	Locknut 5/16	
40	3311605	17	Nut 3/8	
42	3910408	3	Screw #4 x 1/2	
43	3931432	1	Capscrew 1/4 x 2	
44	3931512	4	Capscrew 5/16 x 3/4	
46	4031914	4	Capscrew M8 x 50	
48	4060805	1.2 m /0.39m	Flex-Trim	
49	4240099	AR	Tie-Strap (Not Shown)	
50	4640751	1	Valve, Oil Drain	
51	4711400	3	Washer 1/4	

ITEM	PART NUMBER	QTY	DESCRIPTION	REV
52	4711500	5	Washer 5/16	
53	4711700	2	Washer 7/16	
54	4750400	3	Washer #4	
55	4751400	10	Washer 1/4	
56	4751500	4	Washer 5/16	
57	4751600	34	Washer 3/8	
58	4811702	2	Washer M6	
59	4811900	12	Washer M8	
60	4811902	8	Washer M8	
61	4812000	8	Washer M10	
62	4812100	7	Washer M12	
63	4812200	5	Washer M14	
65	4891800	4	Washer 1/2	
67	8405007	2	Clamp	
68	8405009	4	Clamp	
69	8405104	4	Clamp	
71	8406102	1	Clip	
72	8406109	1	Clip	
73	8406110	1	Clip	
74	8410011	2	Clamp	
75	8410013	1	Clamp	
76	1001117308	1	Relay	
77	1001233089	2	Strap	
79	1001135138	1	Adapter	
82	1001136834	1	Cap, Tank	
83	1001137276	1	Fan	
84	1001138173	1	Support	
86	1001138228	1	Relay, Power Module	
87	1001138248	62 in/1.6m	Tube	
88	1001138557	1	Clamp	
91	1001139409	4	Washer, Special	
97	1001141304	1	Harness, Glow Plug	
98	1001141370	1	Hose	
100	1001141585	1	Hose, Inlet	
102	1001141995	1	Fitting, Straight NPT/Barbed	
103	1001266525	1	Hose, Inlet	
104	1001143390	1	Indicator, Service	
105	1001143726	1	Harness, Deutz Engine (Not Shown - See Separate Breakdown in ELECTRICAL SECTION)	
106	1001143797	1	Fitting, Straight Metric/Barbed	
107	1001143907	1	Cable, Alternator Power	
109	1001152489	1	Fitting, 90 Metric/ Barbed	
110	1001153282	1	Pump Coupling Kit (See Separate Breakdown in this Section)	
112	1001167042	1	Radiator	
113	1001169054	4	Isolator	
114	1001169138	4	Washer	
116	1001177844	1	Hose, Radiator - Upper	
117	1001177845	1	Hose, Radiator - Lower	
119	1001180620	AR	Adhesive	
120	1001181899	1	P-Clamp	
127	1001221212	1	Clamp	
128	1001221219	1	Clamp	

ITEM	PART NUMBER	QTY	DESCRIPTION	REV
129	1001223591	1	Engine, Deutz TD2.9L4 Components (See Separate Breakdown in this Section)	
130	1001257278	1	Muffler	
133	1001224940	1	Pipe, Exhaust	
134	1001138489	1	Air Cleaner Assembly	
134	91403102	1	Element, Filter	
135	1001177359	1	Hose	
136	1001230635	1	Tank	
137	0701022	2	Bolt M10 x 70	
138	3520054	1	Plug	
139	0681608	1	Bolt 3/8 x 1 Grade 8	
140	1001267256	1	Shim, Air Cleaner	
141	1001190610	1	Support, Engine Try	
200	1001257412	1	Bracket Engine Kit (Includes Items 201-217)	E
201	1001138175	1	Bracket	
202	1001139240	1	Bracket	
203	1001140448	1	Mount, Rear Engine	
204	1001140450	1	Mount, Rear Engine	
205	1001140454	1	Mount, Front Engine	
207	1001145154	1	Plate, Relay Mounting	
208	1001260413	1	Bracket, Tank	
209	1001178223	2	Bracket, Radiator	
210	1001186985	1	Plate, Mounting	
212	1001266499	1	Mount, Generator/Engine	
213	1001204325	2	Bracket, Radiator	
214	1001221203	1	Bracket	
215	1001224936	1	Mount, Doc Weldment	
216	1001224937	2	Mount, Fuel Filter	
217	1001260412	1	Bracket	

FIGURE 3-20. DEUTZ TD2.9L4 ENGINE COMPONENTS

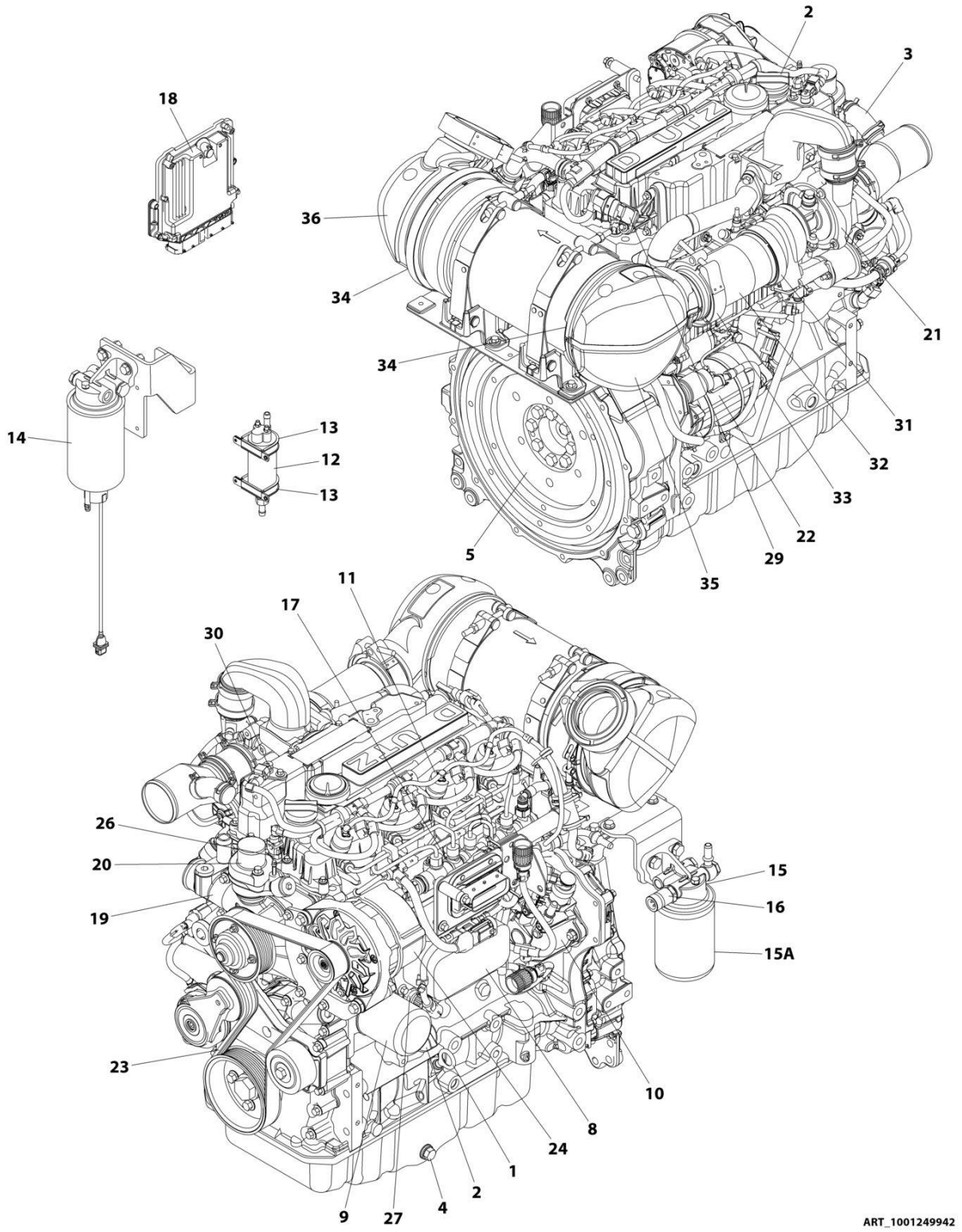

FIGURE 3-20. DEUTZ TD2.9L4 ENGINE COMPONENTS

ITEM	PART NUMBER	QTY	DESCRIPTION	REV
	1001249942	Ref	ENGINE COMPONENTS - DEUTZ TD2.9L4	A
1	70024904	1	Dipstick	
1	70024905	1	Seal	
2	7020465	2	Cap, Oil Fill	
3	70025111	2	Clamp	
3	70005920	1	Hose, Breather	
4	70005941	2	Plug	
4	70005942	2	Seal	
5	70001870	1	Flywheel with Ring Gear	
5	7024579	1	Gear, Ring	
6		Ref	Gasket and Seal Options (Not Shown)	
6	70004279	1	Gasket Kit	
6	70024906	1	Gasket, Head	
6	70025205	1	Gasket, Small Valve Cover	
6	70005171	1	Gasket, Large Valve Cover	
6	70005176	1	O-Seal, Valve Cover to Air Charge Elbow	
6	70005177	1	Gasket, Air Charge Pipe to Head	
6	70029557	2	Gasket, Air Charge Pipe	
6	70025164	1	Gasket, Exhaust Manifold to Head	
6	70025179	1	Gasket, Exhaust Manifold to EGR Pipe	
6	70007354	1	Gasket, EGR Pipe to EGR Valve	
6	70007326	1	Gasket, EGR Valve to Housing	
7	70005172	1	Pump, Oil Lube (Not Shown - Located Front Left Side)	
7	70025135	1	O-Ring	
7	70005173	1	Gasket	
8	70024494	1	Cooler, Oil	
8	70024925	1	Gasket	
9	7016331	1	Filter, Oil	
10	70024924	1	Pump, High Pressure (Not Shown - Located Front Left Side)	
10	70025152	1	O-Ring (Between Pump and Spacer)	
10	70024517	1	O-Ring (Between Spacer and Engine Block)	
10	70004505	1	Valve, Overflow	
10	70004506	1	O-Ring	
10	70004507	1	O-Ring	
10	70004508	1	Valve, Volume Control	
10	70004509	1	O-Ring	
10	70004510	1	O-Ring	
11	70025181	4	Injector Fuel	
11	70025140	4	Washer, Sealing	
11	70025146	4	Clamp (Top of Injector)	
11	70025145	4	O-Seal	
11	70025154	4	Shoe, Clamping	
11	70000345	4	Plug, Glow	
11	70025231	1	Harness, Glow Plug (Not Shown)	
12	70006144	1	Pump, Fuel	
13	70025144	2	Clamp	
14	70024961	1	Filter, Fuel	
14	70025153	1	Element, Filter	
14	70024513	1	Cable, Sensor	
14	70025239	1	Seal	

ITEM	PART NUMBER	QTY	DESCRIPTION	REV
15	70029451	1	Filter With Head	
15A	70025161	1	Filter, Fuel	
16	70028538	1	Sensor, Pressure	
16	70024920	1	Seal	
17	70025151	1	Rail, Fuel	
17	70025235	1	Repair Kit	
17	70025182	1	Line, Fuel (Cylinders 1 & 2)	
17	70025183	1	Line, Fuel (Cylinders 3 & 4)	
17	70025184	1	Line, Fuel (To Rail)	
18	70025210	1	ECU (Engine Control Unit)	
19	70029797	1	Pump, Water	
19	70025200	1	Seal	
19	70007325	1	Gasket	
20	70005929	1	Thermostat	
20	70005184	1	O-Seal	
20	70025142	1	Cover, Thermostat	
20	70005931	1	Gasket	
21	70004276	1	Turbocharger	
21	70024912	1	Gasket, Square	
21	70024509	1	Gasket, Return Line	
21	70006294	1	O-Seal	
22	70024915	1	Starter	
22	70005648	1	Relay	
22	70005647	1	Solenoid	
23	70004277	1	Belt Drive	
24	70006652	1	Alternator	
24	70006653	1	Regulator, Voltage	
25	70007489	1	Harness, Engine (Not Shown)	
26	70028540	1	Sender, Temperature	
27	70028538	1	Sensor, Pressure	
27	70024920	1	Seal	
28	70026210	2	Sensor, Speed (Not Shown -Located Left Side Front and Flywheel Housing)	
28	70024917	1	Seal (Cam Shaft Speed Sensor)	
28	70005191	1	Seal (Flywheel Shaft Speed Sensor)	
29	70024507	1	Sensor, Pressure	
29	70025120	1	Seal	
30	70024922	1	Sender, Temperature	
30	70025212	1	O-Seal	
31	70005527	1	Clamp	
31	70025788	1	Nut	
32	70004504	1	Compensator	
33	70025242	1	Gasket	
33	70029433	1	Clamp	
34	70029517	2	Clamp	
34	70029520	2	Gasket	
35	70007355	1	Inlet	
35	70007331	1	Outlet	

FIGURE 3-21. DEUTZ TD2.9L4 ENGINE COMPONENTS (STAGE V)

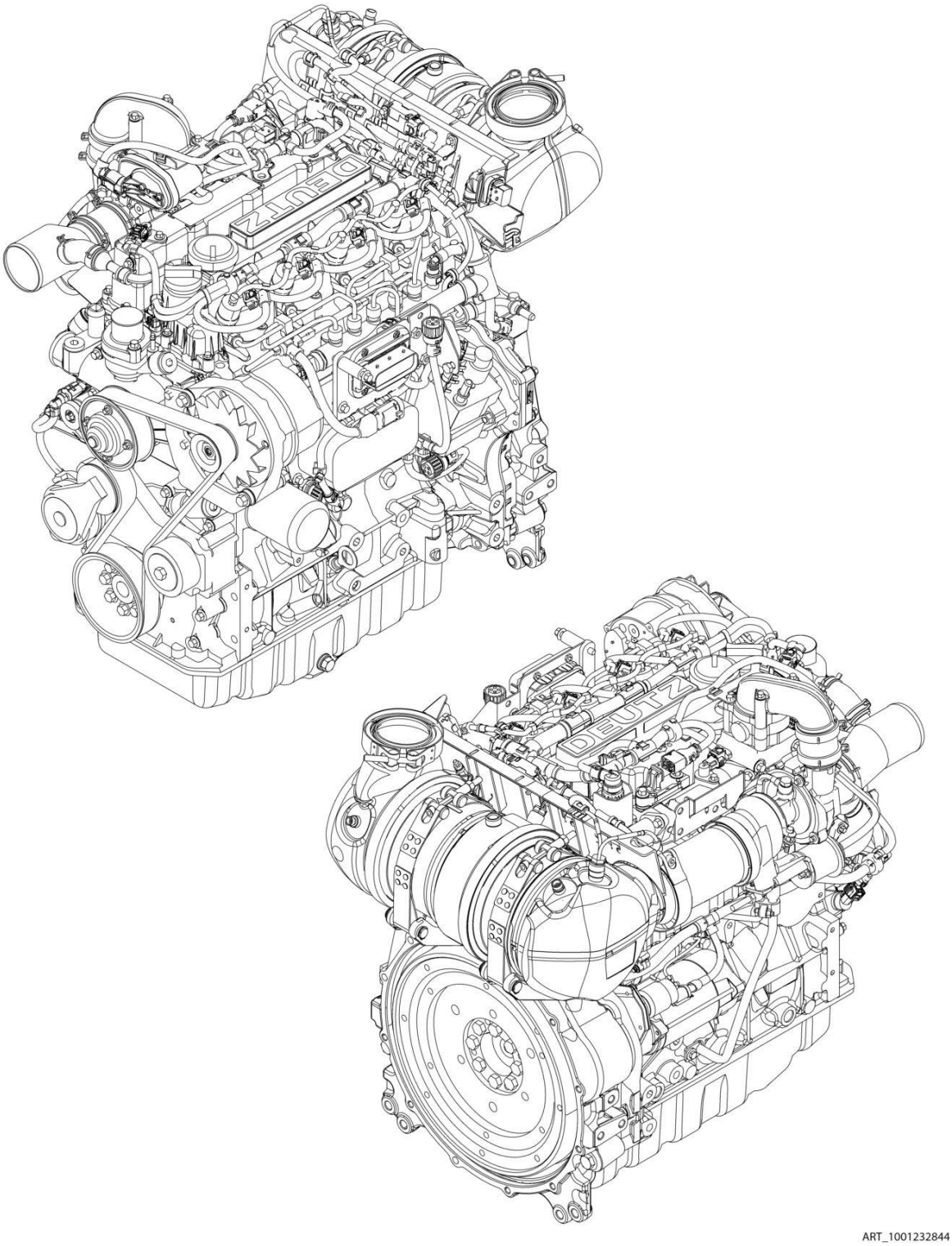

FIGURE 3-21. DEUTZ TD2.9L4 ENGINE COMPONENTS (STAGE V)

ITEM	PART NUMBER	QTY	DESCRIPTION	REV
	1001232844	Ref	DEUTZ ENGINE COMPONENTS	F
		Ref	Note: For complete list of parts, contact JLG Parts Department	
		Ref	Air Intake System Components	
	70004276	1	Turbocharger	
		Ref	Cooling System Components	
	70029797	1	Pump, Coolant (Includes Gasket & Seals)	
	70007603	1	Thermostat	
	70005184	1	O-Ring	
	70005931	1	Gasket	
	70025142	1	Cover	
		Ref	Electrical System Components	
	70029512	1	Module, ECU/ECM	
		Ref	Generator (Includes Controller, Fan & Hardware)	
		Ref	Starter (Includes Solenoid & Relay)	
		Ref	Sender, Tacho-Generator (Speed) (On Rear of Block) (Includes Seal)	
	70024916	1	Sender, Tacho-Generator (Speed) (On Cover) (Includes Seal)	
	70024922	1	Sender, Temperature (Includes Seal) (On Air Intake Manifold)	
	70024507	1	Sensor, Pressure (Includes Seal) (On Air Intake Manifold)	
	70024504	1	Sensor, Pressure (Includes Seal) (On Fuel Filter & Side of Block)	
		Ref	Sensor, Pressure (Includes Seal) (On Exhaust Manifold)	
		Ref	Sensor, Temperature (Includes Seal) (On Exhaust Manifold)	
	70000345	4	Plug, Glow	
		Ref	Exhaust System Components	
		Ref	Valve, EGR	
	70025130	8	Bolt, Exhaust Manifold	
	70025164	1	Gasket, Exhaust Manifold	
		Ref	Outlet, Muffler	
		Ref	Muffler	
		Ref	Bracket, Muffler Mounting	
	70004504	1	Compensator, Exhaust	
		Ref	Fuel System Components	
		Ref	Pump, High Pressure	
	70025181	4	Injector (Includes Sealing washer, Clamp & O-Ring)	
	70006144	1	Pump, Fuel Supply (Includes Clamps)	
	70024961	1	Filter, Fuel (Pre-Filter Assembly) (Includes Head, Spin on filter, Sensor Cable & Seal)	
	70025153	1	Filter, Fuel Spin On	
	70024513	1	Sensor Cable (Includes Seal)	
	70025160	1	Filter, Fuel (Assembly) (Includes Head & Spin on Filter)	
	70025161	1	Filter, Fuel Spin On	
	70004508	1	Vol. Control Valve (Includes O-Ring & Gasket)	
		Ref	Lubricating System Components	
	7020465	2	Cap, Oil Fill	
	70005941	2	Plug, Oil Drain	
	70005942	2	Seal, Oil Drain Plug	
	70005172	1	Pump, Oil (Includes Seal & Gasket)	
	7016331	1	Filter, Oil	
	70024494	1	Cooler, Oil	
	70024925	1	Gasket, Oil Cooler	

ITEM	PART NUMBER	QTY	DESCRIPTION	REV
	70024904	1	Dipstick (Includes Seal)	
		Ref	Mechanical Components	
	70001870	1	Flywheel (includes Gear)	
	70004277	1	V-Belt	
	70030359	1	Belt Tensioner	
	70005938	1	Gasket Set - Complete	

FIGURE 3-22. DEUTZ TD2.9L4 ENGINE COMPONENTS (CHINA III SPECS)

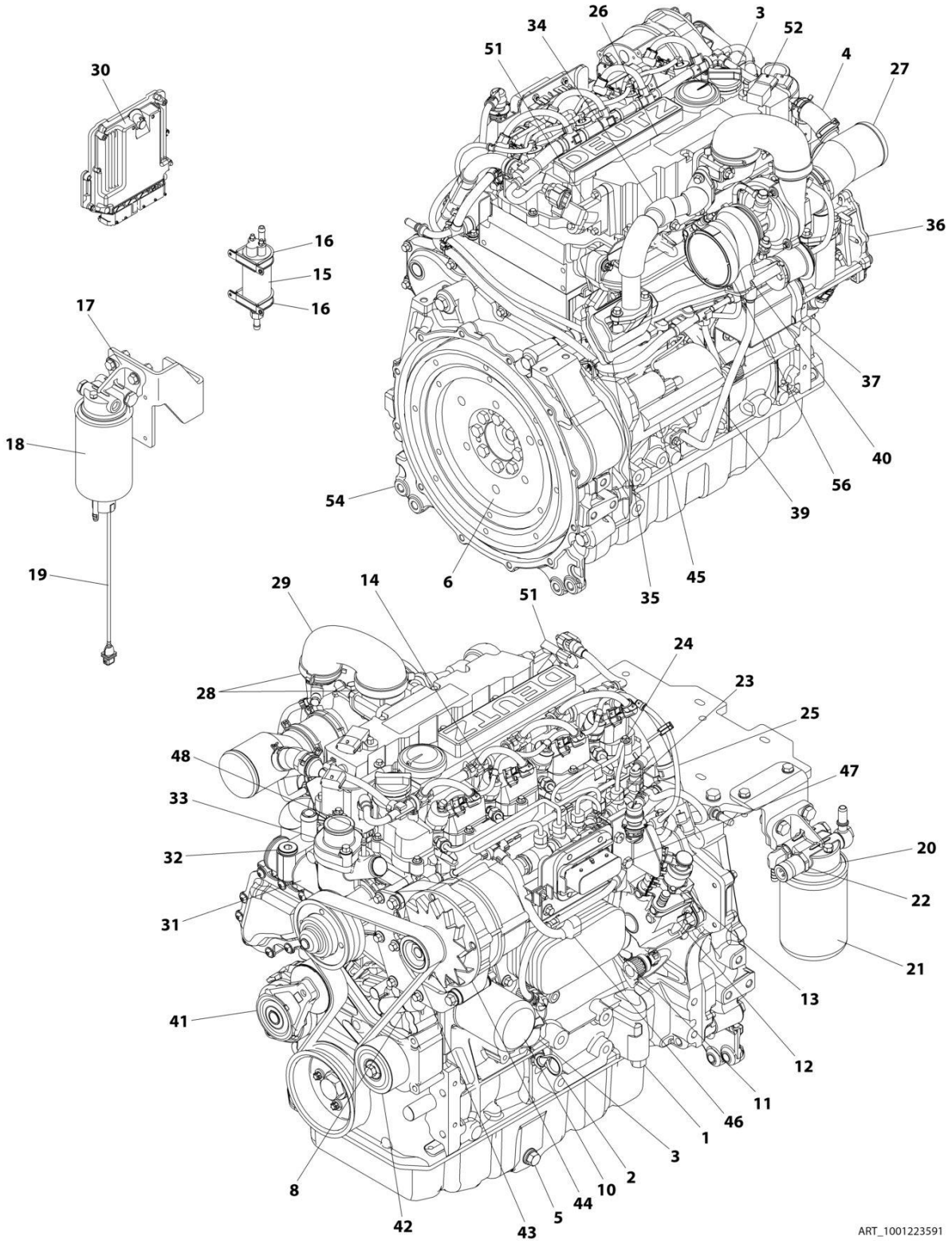

FIGURE 3-22. DEUTZ TD2.9L4 ENGINE COMPONENTS (CHINA III SPECS)

ITEM	PART NUMBER	QTY	DESCRIPTION	REV
	1001223591	Ref	DEUTZ TD2.9L4 ENGINE COMPONENTS	C
1	70025660	1	Plug	
1	70006264	1	Valve, Plunger	
1	70006265	1	Spring	
1	70006266	1	Seal	
2	70024904	1	Dipstick	
2	70024905	2	Seal	
3	7020465	2	Cap, Fill	
4	70005920	1	Line, Breather	
4	70025111	2	Clamp	
5	70006941	2	Plug	
5	70005942	2	Seal	
6	70001870	1	Flywheel	
6	7024579	1	Ring Gear	
6	70025139	8	Bolt	
7		Ref	Gasket & Seal Options (Not Shown):	
7	70005938	1	Gasket Kit	
7	70024906	1	Gasket, Head	
7	70005922	1	Gasket, Valve Cover	
7	70028185	1	Gasket, Front Cover	
7	70004280	1	Seal, Front Main	
7	70002718	1	Seal, Rear Main	
8	See Note	NSS	Valve, Slide (Note: Not Available for Purchase)	
8	70025082	1	Seal	
9	70005172	1	Pump, Lube (Not Shown - Located RH Rear)	
9	70025135	1	O-Seal	
9	70005173	1	Gasket	
10	7016331	1	Filter, Oil	
11	70024494	1	Cooler, Oil	
11	70024925	1	Gasket, Oil Filter	
12	70024924	1	Pump, High Pressure	
12	70025152	1	Gasket (Spacer to Pump)	
12	70024488	1	Spacer	
12	70024517	1	Gasket (Spacer to Block)	
12	70004505	1	Valve, Overflow	
12	70004506	1	Gasket, Overflow	
12	70004507	1	Gasket, Overflow	
13	70004508	1	Valve, Volume Control	
13	70004509	1	O-Ring	
13	70004510	1	Gasket	
14	70025181	4	Injector	
14	70025140	4	Washer, Sealing	
14	70025146	4	Clamp	
14	70025145	4	O-Seal	
14	70025154	4	Shoe/Pad, Clamping	
15	70006144	NLA	Pump, Fuel Supply (Use p/n 1001226098)	
16	70025144	2	Clip, Clamp	
17	70024961	1	Fuel Filter Assembly	
18	1001225430	1	Element, Filter	
19	70024513	1	Cable, Sensor	

ITEM	PART NUMBER	QTY	DESCRIPTION	REV
19	70025239	1	Seal, Ring	
20	70004511	1	Fuel Filter Assembly	
20	70004513	2	Seal (at Hollow Bolt)	
21	1001225432	1	Element, Filter	
22	70028538	1	Sensor, Pressure	
22	70024920	1	O-Seal	
23	70025151	1	Rail, Fuel	
23	70025235	1	Repair Kit - Fuel Rail	
23	70025240	1	O-Ring	
24	70025182	1	Tube, Fuel - Cylinders 1 & 2	
24	70025183	1	Tube, Fuel - Cylinders 3 & 4	
24	70025184	1	Tube, Fuel	
25	70024502	1	Pipe, Fuel Leakage	
25	70025185	1	Hose, Fuel	
25	70025158	1	Manifold	
25	70025109	2	Clamp, Spring	
25	70025115	1	Clamp	
25	70025133	1	Hose	
25	70025101	2	Clamp	
25	70025148	1	Connector, Plug-in	
26	70005923	1	Manifold, Charger Air	
26	70005177	1	Gasket, Charger Air Manifold	
26	70005924	1	Seal (Manifold to Elbow)	
26	7000180	1	Line, Breather (Not Shown)	
26	70005181	1	O-Seal (Breather to Manifold)	
27	70005926	1	Elbow	
27	70025112	2	Clamp	
27	70004501	1	Sleeve, Rubber	
28	See Note	NSS	Sleeve (Note: Not Available for Purchase)	
28	70025107	2	Clamp	
29	70005928	1	Elbow, Air Charge	
30	70025210	1	Module, ECU	
31	70028802	1	Pump, Coolant	
31	70025200	1	Ring, Sealing (Pump to Block)	
32	70025084	2	Plug	
32	7020492	2	Ring, Sealing	
33	70005929	1	Thermostat	
33	70005184	1	O-Seal (Thermostat to Housing)	
33	70025142	1	Housing, Thermostat	
33	70005931	1	O-Seal (Thermostat to Pump)	
33	70025124	2	Bolt	
34	See Note	NSS	Tube (Note: Not Available for Purchase)	
34	70025179	2	Gasket (at Either End of Tube)	
35	See Note	NSS	Valve, Shuttle (Note: Not Available for Purchase)	
35	70025180	1	Gasket	
35	See Note	NSS	Housing, Shuttle Valve (Note: Not Available for Purchase)	
35	70025175	1	Cap, Shuttle Valve	
36	70025203	1	Module, EGR	
36	70025155	1	Plug (Not Shown)	
37	70005188	1	Valve, EGR Control	
37	70005189	1	Seal (Valve to Module)	

ITEM	PART NUMBER	QTY	DESCRIPTION	REV
38	70004282	1	Manifold, Exhaust (Not Shown)	
38	70025164	1	Gasket, Manifold to Head (Not Shown)	
38	70025130	8	Bolt, Manifold (Not Shown)	
38	70026995	1	Elbow, Exhaust (Not Shown)	
38	70025179	2	Gasket, Manifold to Elbow (Not Shown)	
39	70005932	1	Tube, Oil Return	
39	70025132	1	O-Seal	
40	70004276	1	Turbocharger	
40	70024509	1	Gasket (Turbocharger to Oil Return Tube Housing)	
40	1001191599	1	Gasket (Turbocharger to Exhaust)	
41	70025477	1	Tensioner, Belt	
42	70024484	1	Roller, Idler	
43	70004277	1	Belt	
44	70025733	1	Pulley, Alternator	
44	70006652	1	Alternator	
44	70006653	1	Controller	
44	See Note	NSS	Fan (Note: Not Available for Purchase)	
45	70024915	1	Starter	
45	70005647	1	Switch, Solenoid	
45	70005648	1	Relay	
46	70000345	4	Glow Plug	
46	70025231	1	Harness, Glow Plug	
46	70025233	1	Connector, Plug-in	
47	70025077	1	Harness, Engine	
48	70024918	1	Sender, Temperature	
49	70028538	1	Sensor, Pressure (Not Shown - RH Front)	
49	70024920	1	O-Seal	
50	70026210	1	Sensor, Speed (Not Shown - Front)	
50	70005191	1	Ring, Seal	
51	70024507	1	Sensor, Pressure	
51	70025120	1	O-Seal	
51	70005933	1	Adapter	
51	70005934	1	O-Seal	
52	70024922	1	Sender, Temperature	
52	70025212	1	O-Seal	
53	70026210	1	Sensor, Speed (Not Shown - Front)	
53	70024917	1	O-Seal	
54	70025192	1	Housing	
56	70005527	1	Clip	

FIGURE 3-23. FUEL PUMP/FILTER BRACKET ASSEMBLY (DEUTZ TD2.9L4 ENGINES)

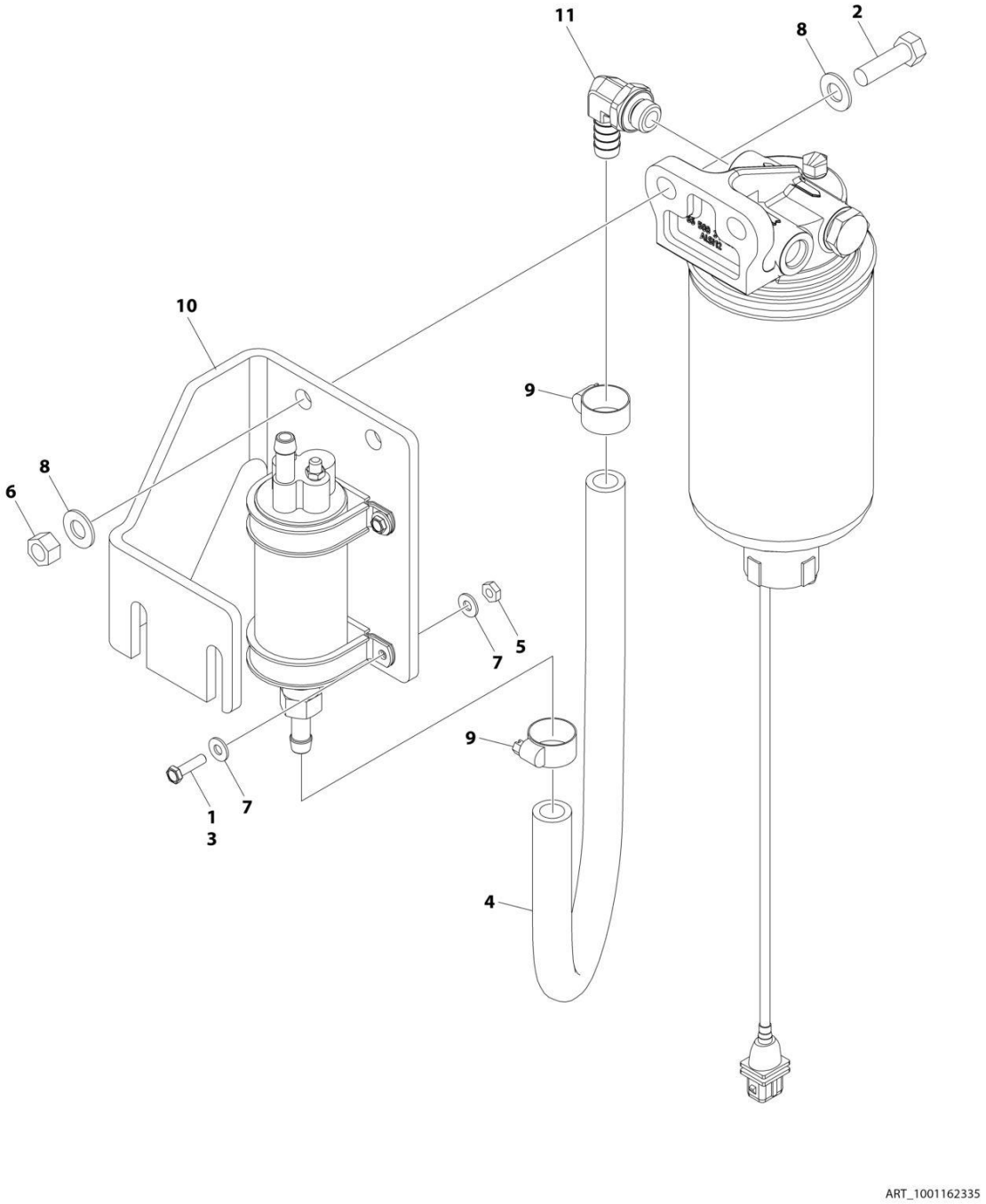

FIGURE 3-23. FUEL PUMP/FILTER BRACKET ASSEMBLY (DEUTZ TD2.9L4 ENGINES)

ITEM	PART NUMBER	QTY	DESCRIPTION	REV
	1001162335	Ref	BRACKET ASSEMBLY - FUEL PUMP AND FILTER (DEUTZ D2.9L4 ENGINE)	E
1	0100011	AR	Compound, Locking	
2	0641610	2	Bolt 3/8 x 1-1/4	
3	0721006	4	Bolt #10 x 3/4	
4	1001154405	AR	Hose	
5	3311001	4	Nut #10	
6	3311605	2	Nut 3/8	
7	4711000	8	Washer #10	
8	4711600	4	Washer 3/8	
9	8405006	2	Clamp	
10	1001141870	1	Plate, Fuel Pump Mount	
11	1001142501	1	Fitting, Elbow Barbed	

FIGURE 3-24. FUEL PUMP/FILTER BRACKET ASSEMBLY (DEUTZ TD2.9L4 (STAGE V) ENGINES)

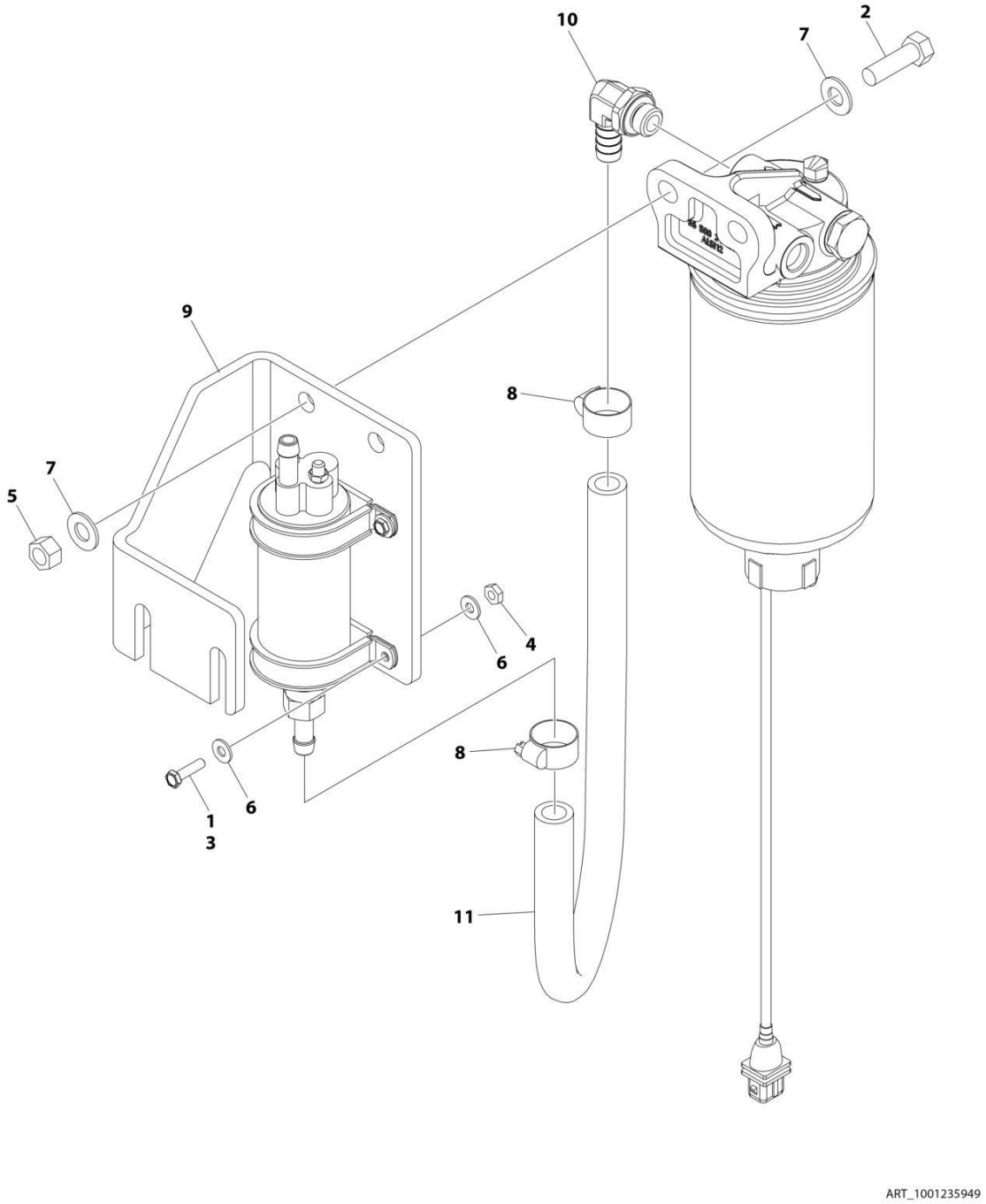

FIGURE 3-24. FUEL PUMP/FILTER BRACKET ASSEMBLY (DEUTZ TD2.9L4 (STAGE V) ENGINES)

ITEM	PART NUMBER	QTY	DESCRIPTION	REV
	1001235949	Ref	BRACKET ASSEMBLY - FUEL PUMP AND FILTER (DEUTZ D2.9L4 (STAGE V) ENGINE)	A
1	0100035	AR	Compound, Locking	
2	0641610	2	Bolt 3/8 x 1-1/4	
3	0721006	4	Bolt #10 x 3/4	
4	3311001	4	Nut #10	
5	3311605	2	Nut 3/8	
6	4711000	8	Washer #10	
7	4711600	4	Washer 3/8	
8	8405006	2	Clamp	
9	1001141870	1	Plate, Fuel Pump Mount	
10	1001142501	1	Fitting, Elbow Barbed	
11	1001154405	1.5 ft /0.4m	Hose	

FIGURE 3-25. FUEL PUMP/FILTER BRACKET ASSEMBLY (DEUTZ TD2.9L4 ENGINES) (CHINA III SPECS)

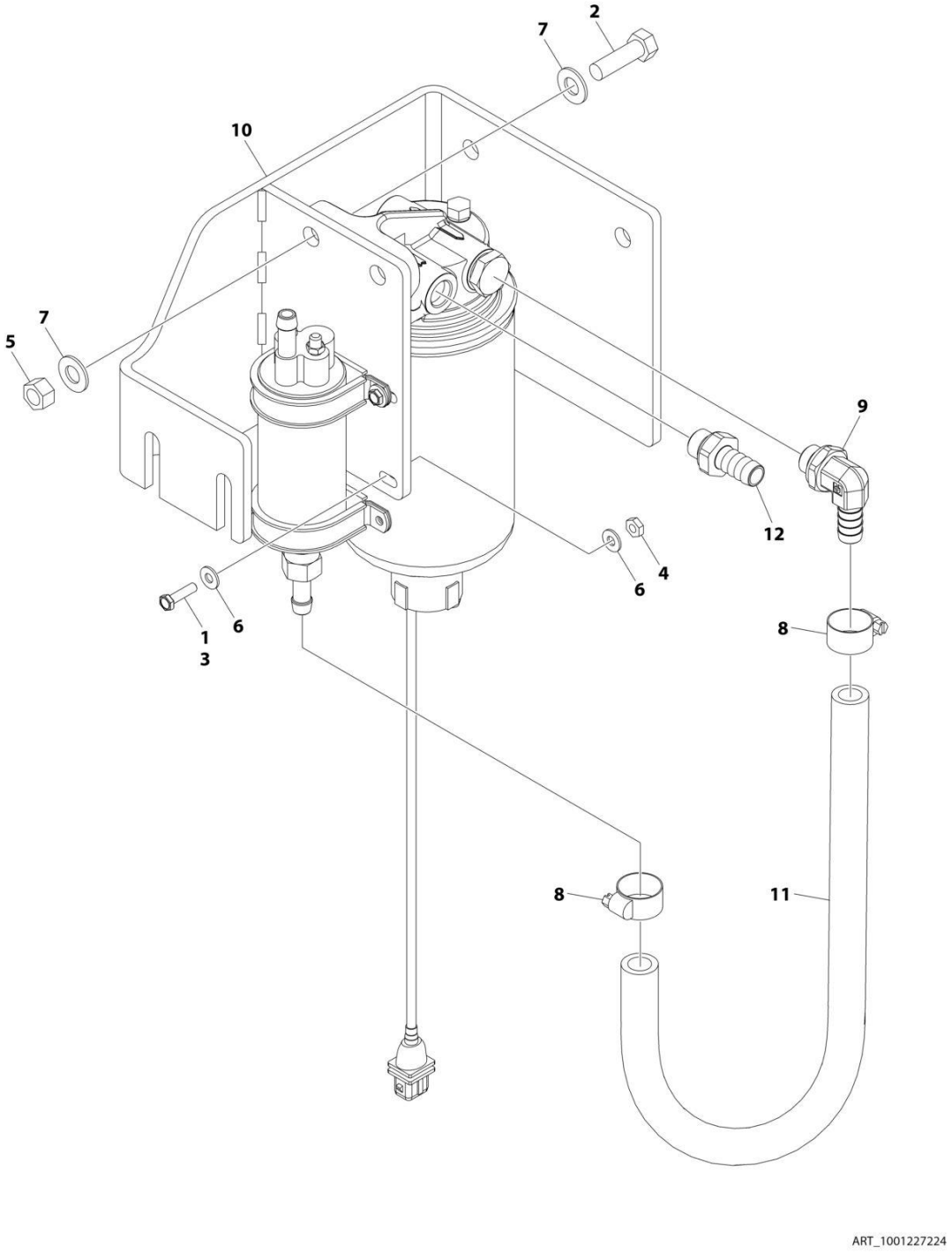

FIGURE 3-25. FUEL PUMP/FILTER BRACKET ASSEMBLY (DEUTZ TD2.9L4 ENGINES) (CHINA III SPECS)

ITEM	PART NUMBER	QTY	DESCRIPTION	REV
	1001227224	Ref	BRACKET ASSEMBLY (LESS FUEL PUMP AND FILTER)	D
1	0100011	AR	Locking, Compound	
2	0641610	2	Bolt 3/8 x 1-1/4	
3	0721006	4	Bolt #10 x 3/4	
4	3311001	4	Nut #10	
5	3311605	2	Nut 3/8	
6	4711000	8	Washer #10	
7	4711600	4	Washer 3/8	
8	8405006	2	Clamp	
9	1001142501	1	Fitting, 90 Metric/Barbed	
10	1001226285	1	Plate, Fuel Pump Mount	
11	1001154405	AR	Hose	
12	1001141718	1	Fitting, Straight (Not Shown)	

FIGURE 3-26. BREATHER HEATER INST (DEUTZ TD2.9L4 ENGINES)

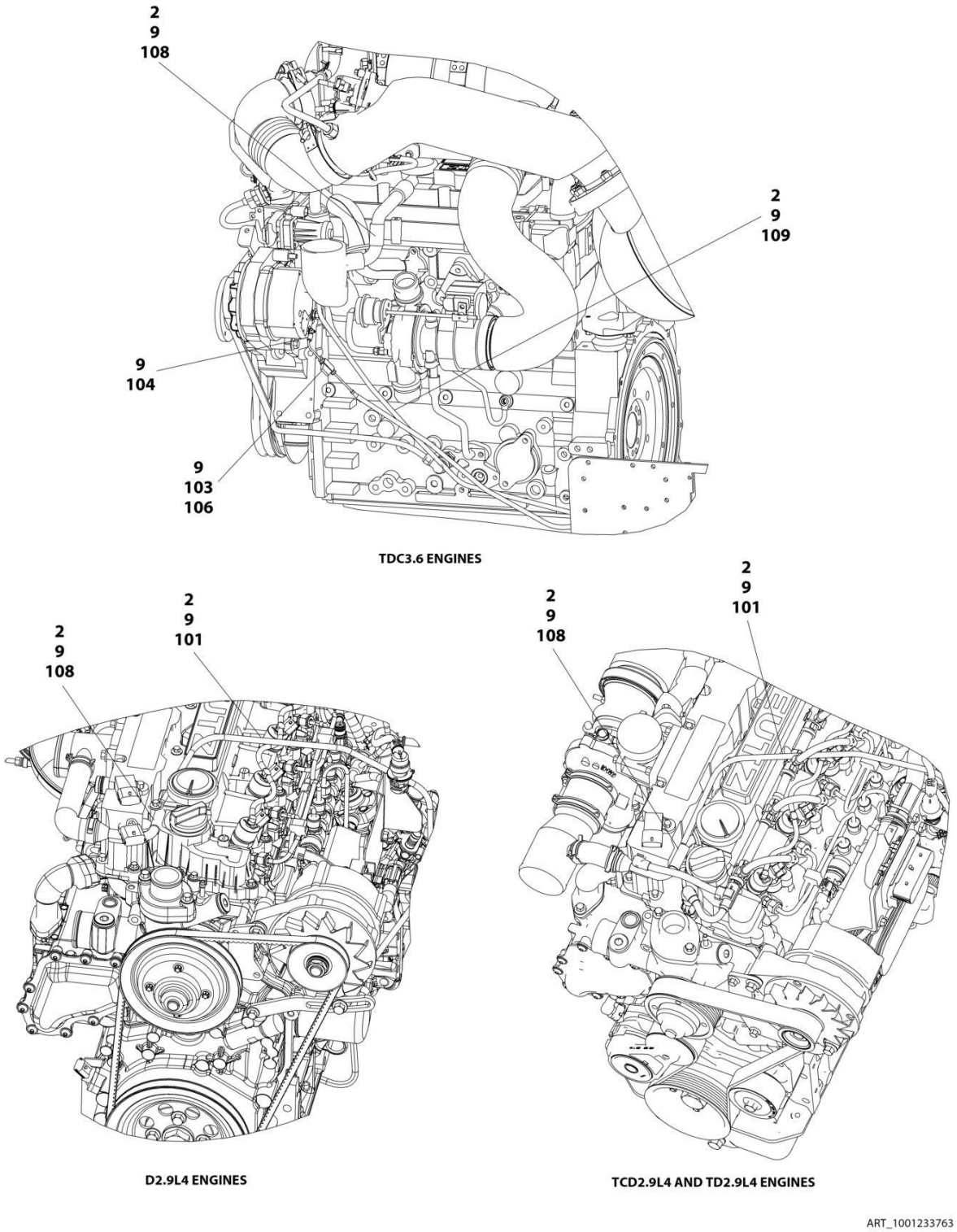

FIGURE 3-26. BREATHER HEATER INST (DEUTZ TD2.9L4 ENGINES)

ITEM	PART NUMBER	QTY	DESCRIPTION	REV
	1001233763	Ref	BREATHER HEATER INSTALLATION - DEUTZ ENGINES	D
2	4240099	AR	Tie-Strap	
9	1001243895	1	Breather Heater Harness	C
101	2820035	AR	Insulation	
103	2400060	1	Fuseholder with Cover	
104	4460043	1	Terminal, Ring	
105	4460722	1	Terminal, Ring (Not Shown)	
106	1001196634	1	Fuse - 2 Amp	
108	1001232842	1	Breather Heater Kit	

FIGURE 3-27. FORD ENGINE INSTALLATION (WITHOUT ARCTIC PACKAGE)

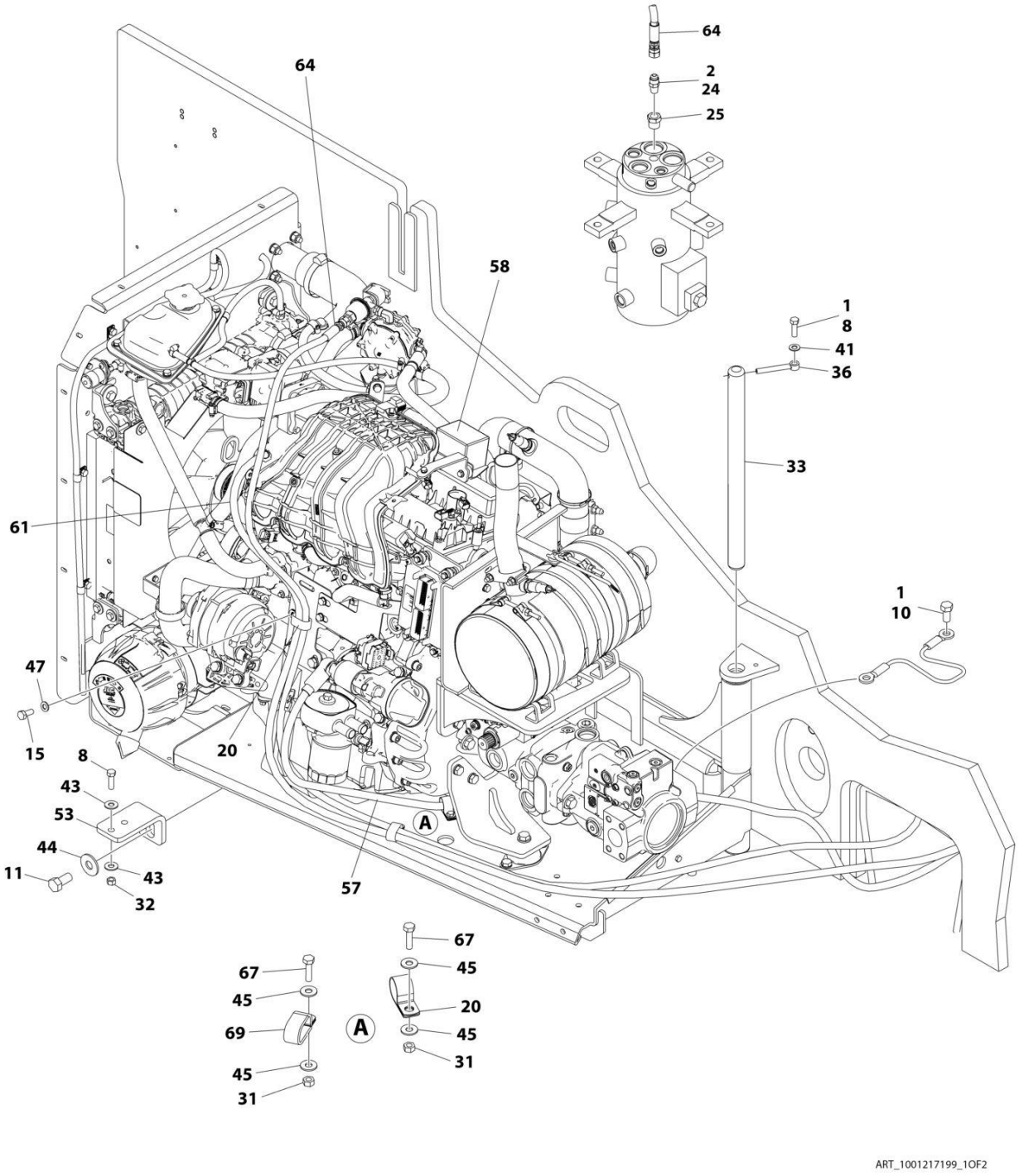

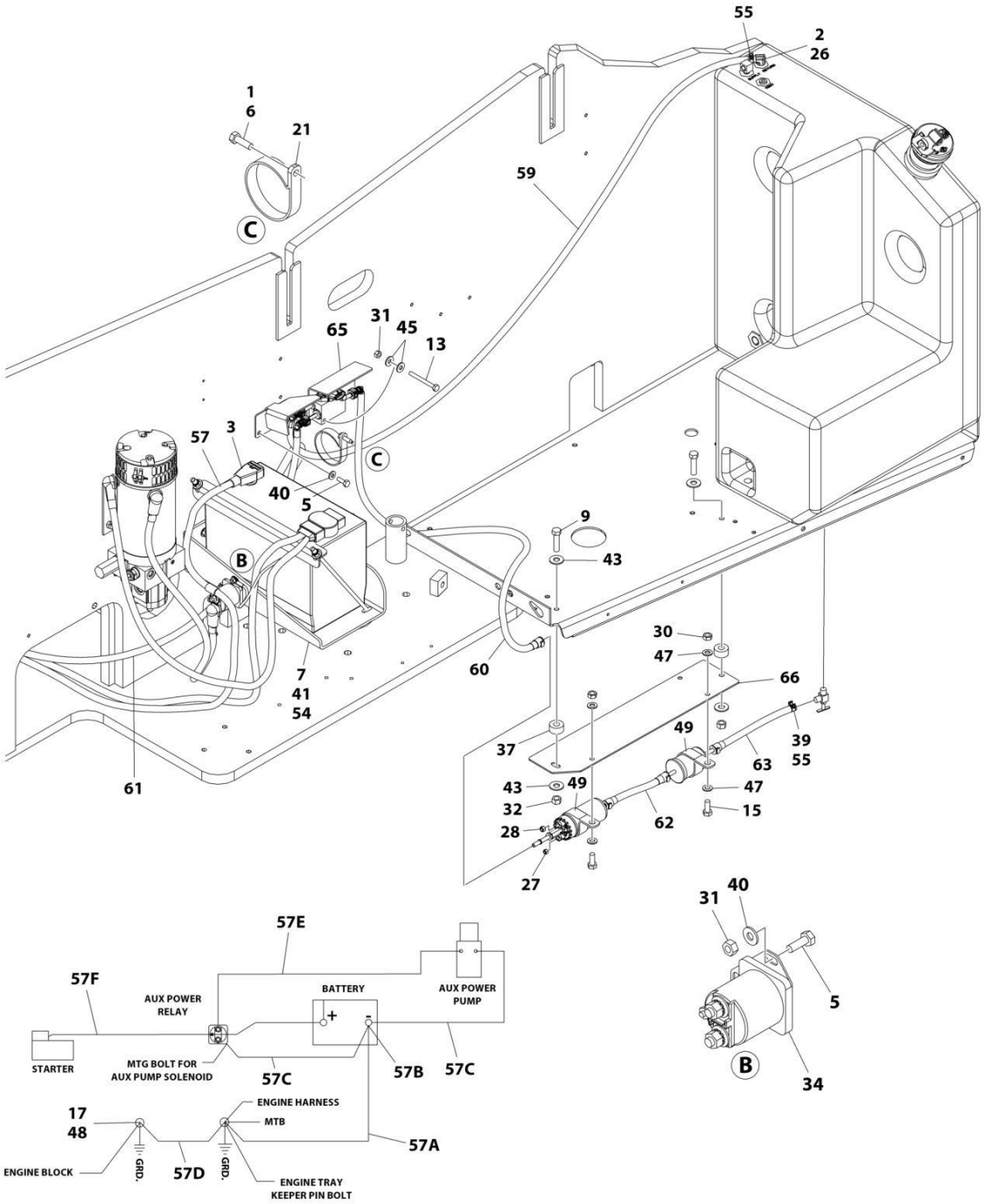

BATTERY CABLE KIT - ITEM 57

ART_1001217199_2OF2

FIGURE 3-27. FORD ENGINE INSTALLATION (WITHOUT ARCTIC PACKAGE)

ITEM	PART NUMBER	QTY	DESCRIPTION	REV
	1001217199	Ref	Ford Engine Installation without Arctic Package	H
1	0100011	AR	Compound, Locking	
2	0100020	AR	Sealant	
3	0100048	AR	Grease, Terminal	
5	0641406	4	Bolt 1/4 x 3/4	
6	0641508	1	Bolt 5/16 x 1	
7	0641607	3	Bolt 3/8 x 7/8	
8	0641610	3	Bolt 3/8 x 1-1/4	
9	0641612	2	Bolt 3/8 x 1-1/2	
10	0641808	1	Bolt 1/2 x 1	
11	0642010	1	Bolt 5/8 x 1-1/4	
13	0641420	2	Bolt 1/4 x 2-1/2	
15	0760810	3	Bolt M8 x 20	
17	0761008	1	Bolt M10 x 16	
20	1321283	2	Clamp	
21	1321339	1	Clamp	
22	1701542	1	Decal - Gas (Not Shown)	
23	1701543	2	Decal - LPG (Not Shown)	
24	2180418	1	Fitting, Straight	
25	2221197	1	Fitting, Reducer NPT/NPT	
26	2221176	1	Fitting, 90	
27	3290405	1	Nut M4	
28	3290505	1	Nut M5	
30	3290801	2	Nut M8	
31	3311405	6	Nut 1/4	
32	3311605	4	Nut 3/8	
33	3422446	1	Pin	
34	3740067	1	Relay	
35	3790012	1	O-Ring (Not Shown - Located on Platform Console Box)	
36	3841143	1	Keeper, Pin	
37	4071122	2	Shim	
38	4360336	1	Switch, Toggle (Not Shown - Located on Platform Console Box)	
39	1001221488	1	Tube, Fuel Line	
40	4711400	6	Washer 1/4	
41	4711600	4	Washer 3/8	
43	4751600	8	Washer 3/8	
44	4752000	1	Washer 5/8	
45	4751400	8	Washer 1/4	
47	4811900	5	Washer M8	
48	4812000	1	Washer M10	
49	85941018	2	Clamp	
53	1001153359	1	Mount	
54	1001162497	1	Bracket, Battery	
55	1001174486	2	Clamp	
57	1001216568	1	Battery Cable Kit	B
57A	7027084	1	Cable, Battery - Ground to Battery -	
57B	8270147	1	Terminal, Battery with Boot	
57C	7027085	1	Cable, Battery - Auxiliary Pump/Relay to Battery -	
57D	7027086	1	Cable, Battery - Engine to Ground	
57E	7027088	1	Cable, Battery - Auxiliary Relay to Auxililary Pump	

ITEM	PART NUMBER	QTY	DESCRIPTION	REV
57F	70009020	1	Cable, Battery - Starter/Auxiliary Relay to Battery +	
58	1001217192	1	Ford Engine and Pump Sub-Assembly (Without Arctic Package) (See Separate Breakdown in this Section)	
59	1001219364	1	Hose	
60	1001219365	1	Hose	
61	1001219366	1	Hose	
62	1001219367	1	Hose	
63	1001219368	1	Hose	
64	1001219369	1	Hose	
65	1001219370	1	Bracket	
66	1001219809	1	Bracket	
67	0641408	2	Bolt 1/4 x 1	
69	8406201	1	Clip	
70	4240099	AR	Tie-Strap (Not Shown)	

FIGURE 3-28. FORD ENGINE INSTALLATION (WITH ARCTIC PACKAGE)

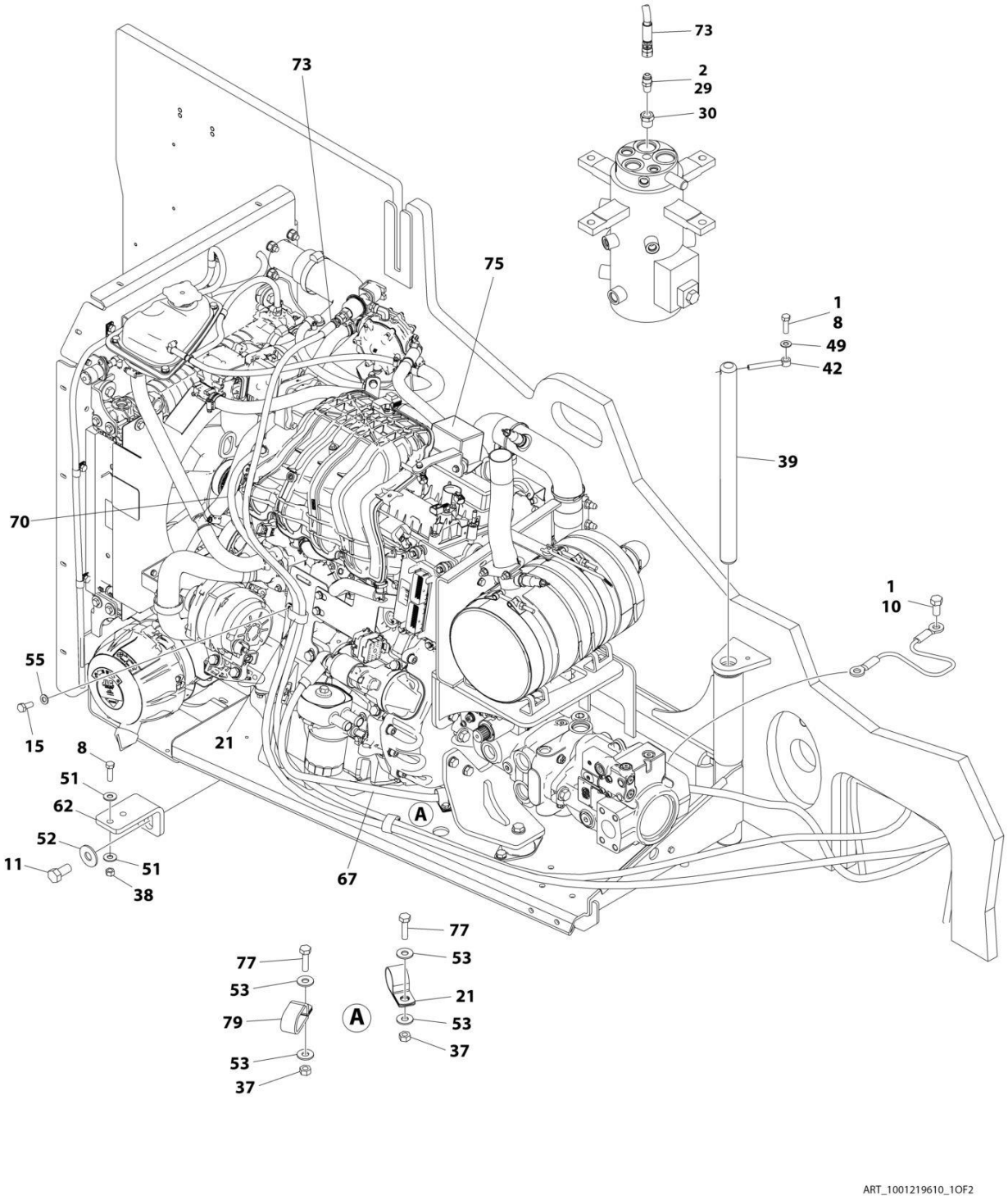

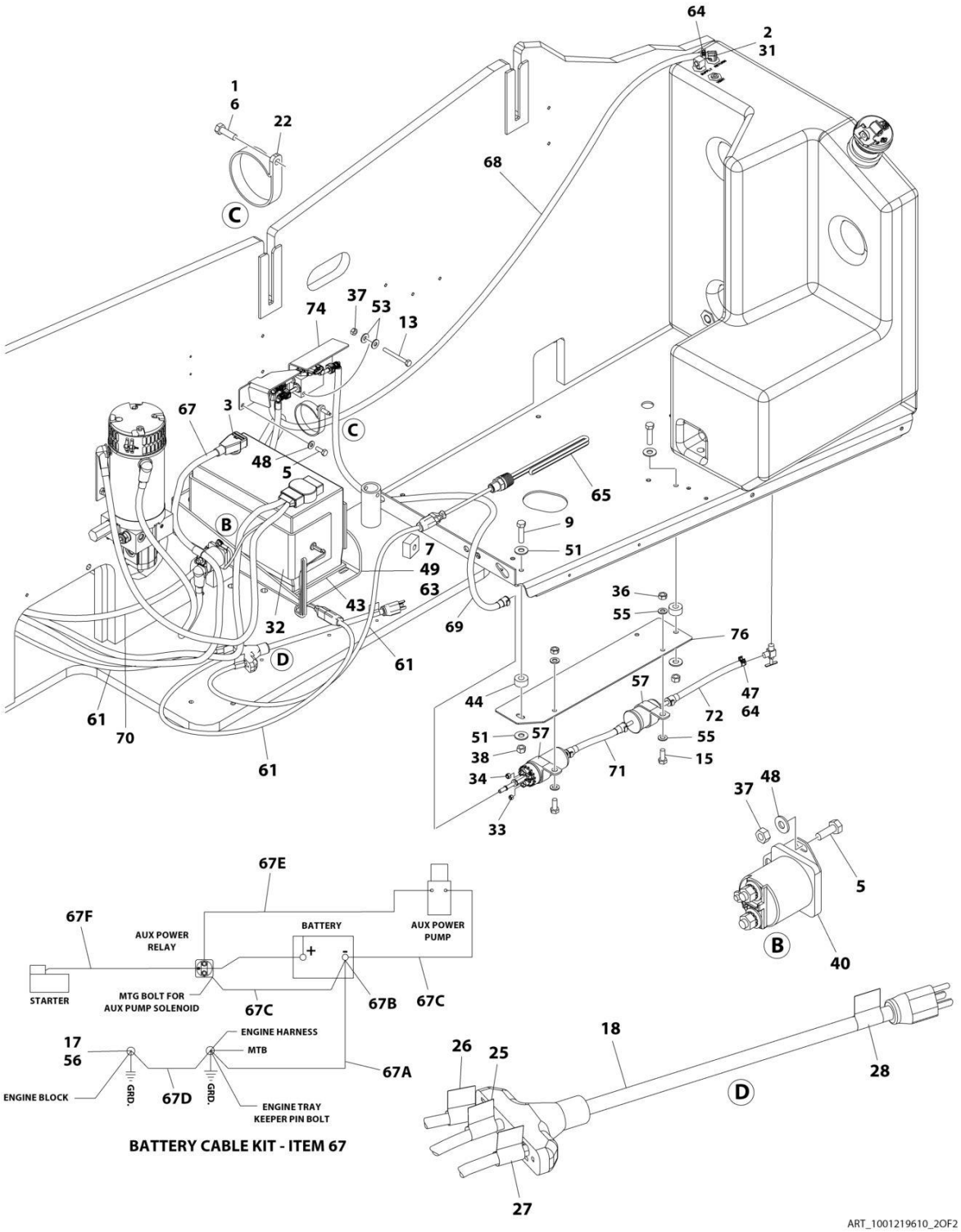
64
2
31
1
6
22
68
C
37
53
74
13
67
3
48
5
C
65
B
9
7
51
49
63
36
55
43
69
76
32
D
61
57
47
44
72
64
61
70
51
57
55
38
15
34
71
61
33
37
48
5
67E
67F
AUX POWER RELAY
BATTERY
AUX POWER PUMP
B
40
STARTER
MTG BOLT FOR AUX PUMP SOLENOID
67C
67B
67C
ENGINE HARNESS
17
56
MTB
67A
ENGINE BLOCK
GRID.
67D
GRID.
ENGINE TRAY KEEPER PIN BOLT
BATTERY CABLE KIT - ITEM 67
26
25
18
28
D
27
ART_1001219610_2OF2

FIGURE 3-28. FORD ENGINE INSTALLATION (WITH ARCTIC PACKAGE)

ITEM	PART NUMBER	QTY	DESCRIPTION	REV
	1001219610	Ref	FORD ENGINE INSTALLATION (WITH ARCTIC PACKAGE)	H
1	0100011	AR	Compound, Locking	
2	0100020	AR	Sealant	
3	0100048	AR	Grease, Terminal	
5	0641406	4	Bolt 1/4 x 3/4	
6	0641508	1	Bolt 5/16 x 1	
7	0641607	3	Bolt 3/8 x 7/8	
8	0641610	3	Bolt 3/8 x 1-1/4	
9	0641612	2	Bolt 3/8 x 1-1/2	
10	0641808	1	Bolt 1/2 x 1	
11	0642010	1	Bolt 5/8 x 1-1/4	
13	0641420	2	Bolt 1/4 x 2-1/2	
15	0760810	3	Bolt M8 x 20	
17	0761008	1	Bolt M10 x 16	
18	1060626	1	Plug, 3 Way	
21	1321283	2	Clamp	
22	1321339	1	Clamp	
23	1701542	1	Decal - Gas (Not Shown)	
24	1701543	2	Decal - LPG (Not Shown)	
25	1702941	1	Decal - Battery Heater	
26	1702942	1	Decal - Engine Block Heater	
27	1702943	1	Decal - Hydraulic Tank Heater	
28	1702944	1	Decal - Heater Cord	
29	2180418	1	Fitting, Straight	
30	2221197	1	Fitting, Reducer NPT/NPT	
31	2221176	1	Fitting, 90	
32	2580024	1	Heater, Battery	
33	3290405	1	Nut M4	
34	3290505	1	Nut M5	
36	3290801	2	Nut M8	
37	3311405	6	Nut 1/4	
38	3311605	4	Nut 3/8	
39	3422446	1	Pin	
40	3740067	1	Relay	
41	3790012	1	O-Ring (Not Shown - Located on Platform Console Box)	
42	3841143	1	Keeper, Pin	
43	3980007	1	Seat, Battery	
44	4071122	2	Shim	
45	4240099	AR	Tie-Strap (Not Shown)	
46	4360336	1	Switch, Toggle (Not Shown - Located on Platform Console Box)	
47	1001221488	1	Tube, Fuel Line	
48	4711400	6	Washer 1/4	
49	4711600	4	Washer 3/8	
51	4751600	8	Washer 3/8	
52	4752000	1	Washer 5/8	
53	4751400	8	Washer 1/4	
55	4811900	5	Washer M8	
56	4812000	1	Washer M10	
57	85941018	2	Clamp	
61	1001150918	1	Cable, Immersion Heater	

ITEM	PART NUMBER	QTY	DESCRIPTION	REV
62	1001153359	1	Mount	
63	1001162497	1	Bracket, Battery	
64	1001174486	2	Clamp	
65	1001188972	1	Heater, Hydraulic Tank	
67	1001216568	1	Battery Cable Kit	B
67A	7027084	1	Cable, Battery - Ground to Battery -	
67B	8270147	1	Terminal, Battery with Boot	
67C	7027085	1	Cable, Battery - Auxiliary Pump/Relay to Battery -	
67D	7027086	1	Cable, Battery - Engine to Ground	
67E	7027088	1	Cable, Battery - Auxiliary Relay to Auxililary Pump	
67F	70009020	1	Cable, Battery - Starter/Auxiliary Relay to Battery +	
68	1001219364	1	Hose	
69	1001219365	1	Hose	
70	1001219366	1	Hose	
71	1001219367	1	Hose	
72	1001219368	1	Hose	
73	1001219369	1	Hose	
74	1001219370	1	Bracket	
75	1001219609	1	Ford Engine and Pump Sub-Assembly (with Arctic Package) (See Separate Breakdown in this Section)	
76	1001219809	1	Bracket	
77	0641408	1	Bolt 1/4 x 1	
79	8406201	1	Clip, Tube	

FIGURE 3-29. FORD ENGINE AND PUMP SUB-ASSEMBLY (WITHOUT ARCTIC PACKAGE)

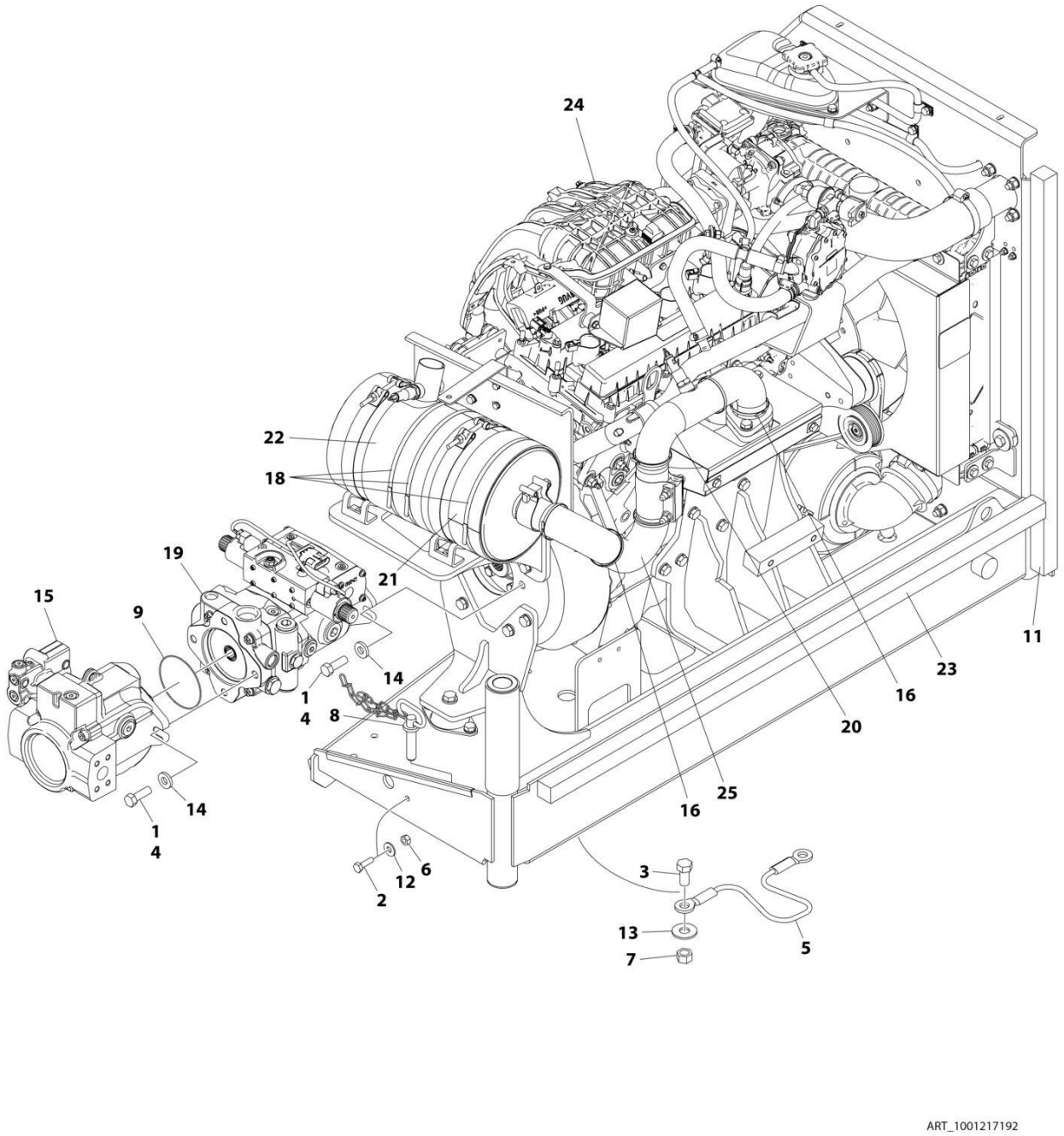

FIGURE 3-29. FORD ENGINE AND PUMP SUB-ASSEMBLY (WITHOUT ARCTIC PACKAGE)

ITEM	PART NUMBER	QTY	DESCRIPTION	REV
	1001217192	Ref	FORD ENGINE AND PUMP SUB-ASSEMBLY (WITHOUT ARCTIC PACKAGE)	G
1	0100011	AR	Compound, Locking	
2	0641407	1	Bolt 1/4 x 7/8	
3	0641808	1	Bolt 1/2 x 1	
4	0641812	4	Bolt 1/2 x 1-1/2	
5	1060637	1	Cable, Lanyard	
6	3311405	1	Nut 1/4	
7	3311805	1	Nut 1/2	
8	3422532	1	Pin	
9	3790044	1	O-Ring	
11	3960469	1	Seal	
12	4751400	1	Washer 1/4	
13	4751800	1	Washer 1/2	
14	4891800	4	Washer 1/2	
15	1001094595	1	Variable Pump Assembly (See Separate Breakdown in this Section)	
16	1001100825	6	Strap	
18	1001221464	3	Strap	
19	1001225745	1	Hydrostatic Pump Assembly (See Separate Breakdown in this Section)	
20	1001216532	1	Insulate, Exhaust Pipe	
21	1001216534	1	Insulate, Muffler	
22	1001216535	1	Insulate, Muffler	
23	1001217170	1	Seal	
24	1001217191	1	Ford Engine Assembly without Arctic Package (See Separate Breakdown in this Section)	
25	1001218085	1	Insulate, Exhaust Pipe	

FIGURE 3-30. FORD ENGINE AND PUMP SUB-ASSEMBLY (WITH ARCTIC PACKAGE)

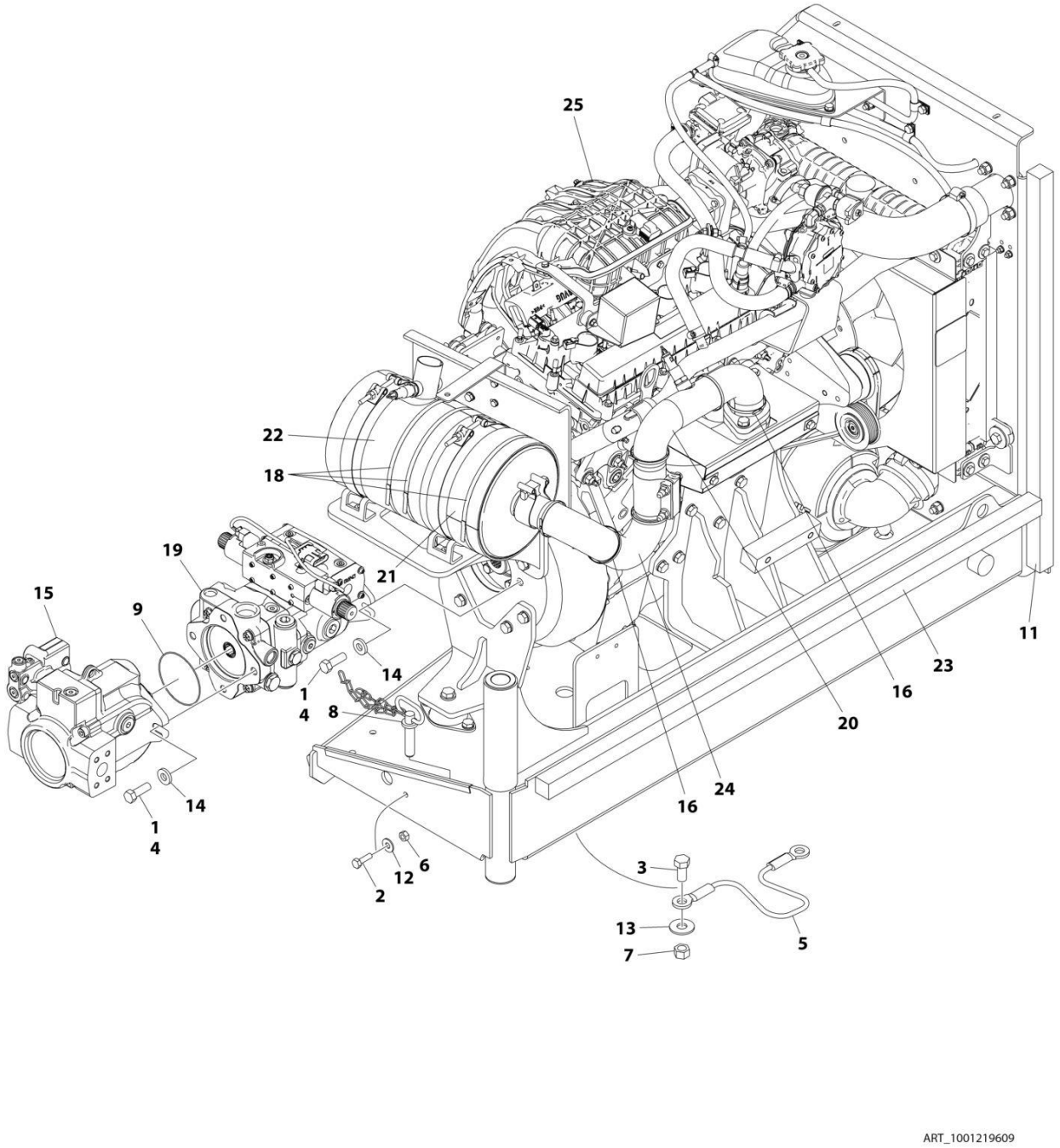

FIGURE 3-30. FORD ENGINE AND PUMP SUB-ASSEMBLY (WITH ARCTIC PACKAGE)

ITEM	PART NUMBER	QTY	DESCRIPTION	REV
	1001219609	Ref	FORD ENGINE AND PUMP SUB-ASSEMBLY (WITH ARCTIC PACKAGE)	E
1	0100011	AR	Compound, Locking	
2	0641407	1	Bolt 1/4 x 7/8	
3	0641808	1	Bolt 1/2 x 1	
4	0641812	4	Bolt 1/2 x 1-1/2	
5	1060637	1	Cable, Lanyard	
6	3311405	1	Nut 1/4	
7	3311805	1	Nut 1/2	
8	3422532	1	Pin	
9	3790044	1	O-Ring	
11	3960469	1	Seal	
12	4751400	1	Washer 1/4	
13	4751800	1	Washer 1/2	
14	4891800	4	Washer 1/2	
15	1001094595	1	Variable Pump Assembly (See Separate Breakdown in this Section)	
16	1001100825	6	Strap	
18	1001137336	3	Strap	
19	1001225745	1	Hydrostatic Pump Assembly (See Separate Breakdown in this Section)	
20	1001216532	1	Insulate, Exhaust Pipe	
21	1001216534	1	Insulate, Muffler	
22	1001216535	1	Insulate, Muffler	
23	1001217170	1	Seal	
24	1001218085	1	Insulate, Exhaust Pipe	
25	1001219608	1	Ford Engine Assembly with Arctic Package (See Separate Breakdown in this Section)	

FIGURE 3-31. FORD ENGINE ASSEMBLY (WITHOUT ARCTIC PACKAGE)

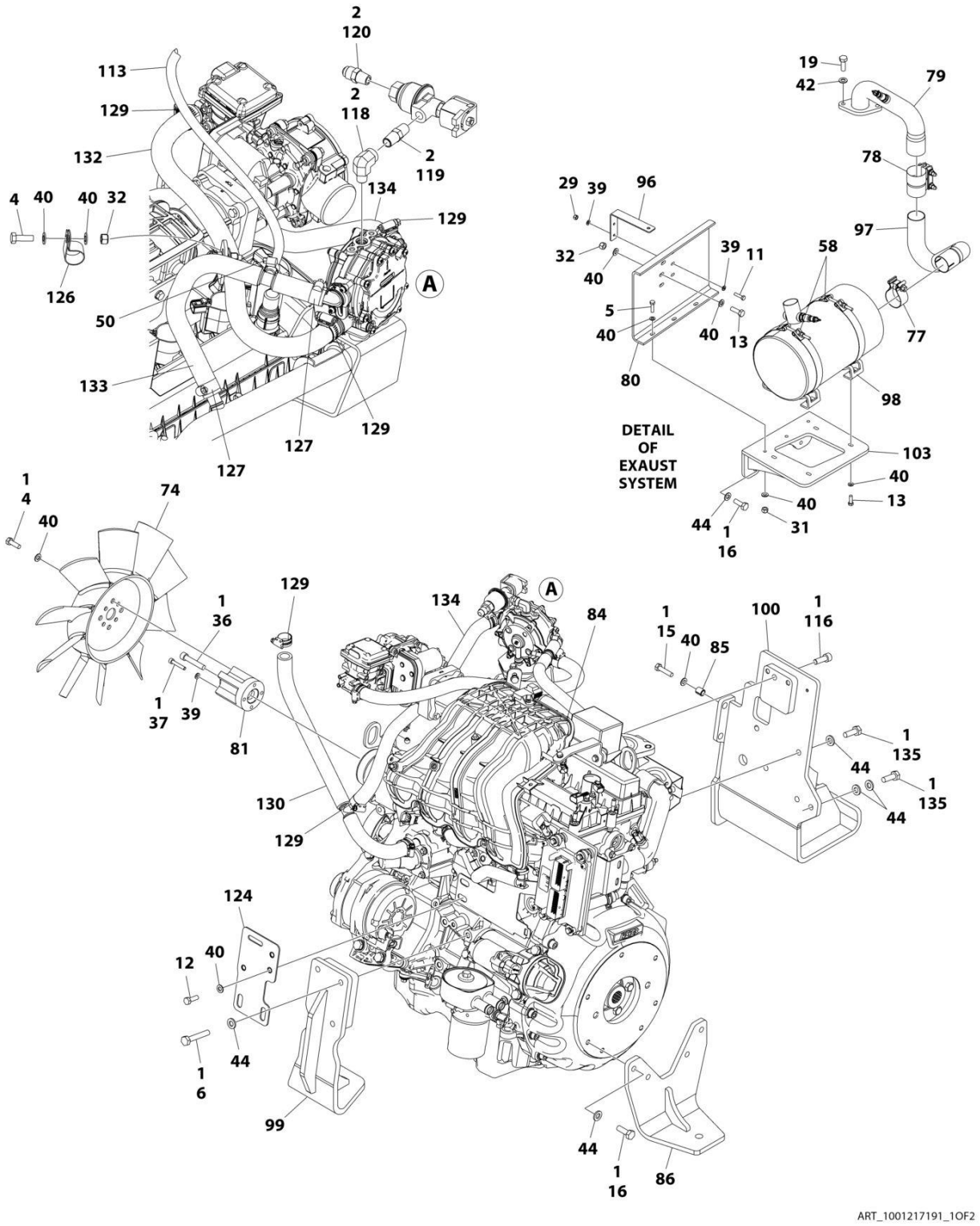

ART_1001217191_1OF2

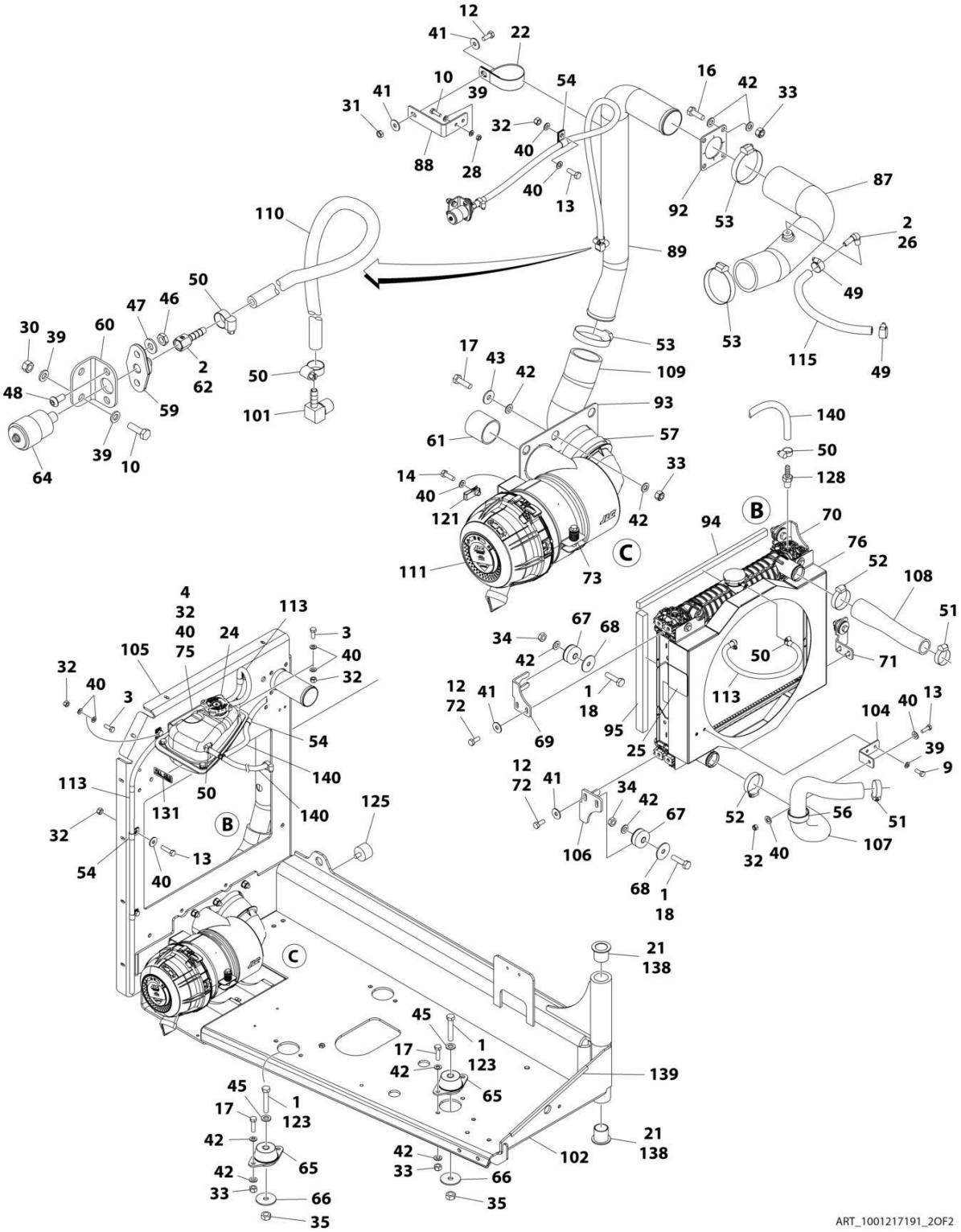
12
41
22
10
39
54
16
42
33
31
41
32
40
88
28
40
13
92
53
87
110
89
2
26
49
50
47
46
30
39
60
2
62
48
59
64
39
10
50
101
17
43
42
53
109
93
53
115
49
140
61
57
50
128
14
40
121
33
42
94
B
70
76
52
108
111
73
C
4
32
40
75
24
113
3
40
32
105
32
40
3
34
42
67
68
50
71
51
12
72
41
69
1
18
113
95
25
104
40
13
39
9
54
140
113
50
131
B
140
125
12
72
41
34
42
67
106
68
1
18
52
56
51
107
32
40
32
54
13
40
C
21
138
45
17
1
42
123
65
139
45
17
1
123
42
65
42
33
66
35
42
33
66
35
102
21
138
ART_1001217191_2OF2

FIGURE 3-31. FORD ENGINE ASSEMBLY (WITHOUT ARCTIC PACKAGE)

ITEM	PART NUMBER	QTY	DESCRIPTION	REV
	1001217191	Ref	FORD ENGINE ASSEMBLY	Q
1	0100011	AR	Compound, Locking	
2	0100020	AR	Sealant	
3	0700810	3	Bolt 8 x 20	
4	0700812	7	Bolt 8 x 25	
5	0700814	3	Bolt 8 x 30	
6	0711020	3	Bolt M10 x 60	
9	0760608	2	Bolt 6 x 16	
10	0760610	4	Bolt M6 x 20	
11	0760612	2	Bolt 6 x 25	
12	0760810	11	Bolt M8 x 20	
13	0760812	12	Bolt M8 x 25	
14	0760814	2	Bolt M8 x 30	
15	0760815	2	Bolt M8 x 35	
16	0761014	11	Bolt M10 x 30	
17	0761015	12	Bolt M10 x 35	
18	0761016	4	Bolt M10 x 40	
19	0771014	2	Bolt 10 x 30	
21	0961986	2	Bearing, Flange	
22	1320110	1	Clamp	
23	1001187781	1	Tie-Strap (Not Shown)	
24	1001223584	1	Tank, Surge	
25	1703162	2	Decal - Fan Blade	
26	2180467	1	Fitting, Straight NPT/Barb	
28	3290601	2	Nut M6	
29	3290605	2	Nut M6	
30	3290607	2	Nut M6	
31	3290801	4	Nut M8	
32	3290805	14	Nut M8	
33	3291005	16	Nut M10	
34	3291001	4	Nut M10	
35	3291201	3	Nut M12	
36	3931640	1	Screw 3/8 x 2-1/2	
37	4031711	4	Capscrew M6 x 35	
38	4240099	AR	Tie-Strap (Not Shown)	
39	4811700	18	Washer M6	
40	4811900	48	Washer M8	
41	4811902	10	Washer M8	
42	4812000	38	Washer M10	
43	4812002	6	Washer M10	
44	5241000	16	Washer M10	
45	5241200	3	Washer M12	
46	8305401	2	Nut Jam	
47	8307109	2	Washer	
48	8310548	2	Screw 1/4 x 1/2	
49	8405006	2	Clamp	
50	8405009	5	Gear	
51	8405102	2	Clamp	
52	8405104	2	Clamp	
53	8405203	3	Clamp	

ITEM	PART NUMBER	QTY	DESCRIPTION	REV
54	8406109	6	Clip	
56	8410001	1	Clamp	
57	8410011	1	Clamp	
58	1001128901	2	Strap	
59	1001138173	1	Support	
60	1001138175	1	Bracket	
61	1001141585	1	Hose	
62	1001141995	2	Fitting, Straight NPT/Barbed	
64	1001149639	1	Indicator, Restriction	
65	1001191610	3	Mount, Motor	
66	1001168018	3	Washer	
67	1001169054	4	Isolator	
68	1001169138	4	Pad, Snubbing	
69	1001169967	1	Bracket	
70	1001170035	1	Bracket	
71	1001176329	1	Bracket	
72	1001180620	AR	Adhesive	
73	1001186426	1	Clamp	
74	1001223042	1	Fan	
75	1001225442	1	Bracket	
76	1001223923	1	Radiator	
77	1001215681	1	Clamp	
78	1001215974	1	Clamp	
79	1001216075	1	Pipe, Exhaust	
80	1001216092	1	Shield, Heat	
81	1001216201	1	Adapter	
84	1001216910	1	Ford Engine Prep Assembly (See Separate Breakdown in this Section)	
85	1001216919	2	Sleeve	
86	1001290252	1	Mount, Engine Rear	
87	1001217032	1	Tube	
88	1001217046	1	Bracket	
89	1001217090	1	Tube	
92	1001217174	1	Seal	
93	1001217175	1	Seal	
94	1001217183	2	Seal	
95	1001217185	2	Seal	
96	1001217186	1	Support	
97	1001217317	1	Pipe	
98	1001217543	2	Mount	
99	1001218362	1	Mount	
100	1001218449	1	Bracket	
101	1001134488	1	Fitting	
102	1001219259	1	Support	
103	1001219345	1	Muffler	
104	1001219361	1	Support	
105	1001219363	1	Plate	
106	1001219480	1	Bracket	
107	1001219611	1	Hose	
108	1001219612	1	Hose	
109	1001219613	1	Tube	
110	1001138248	31 in/	Tube	

ITEM	PART NUMBER	QTY	DESCRIPTION	REV
		77cm		
111	1001189979	1	Air Filter Assembly	
111	70005008	1	Element, Filter - Primary	
111	70006460	1	Element, Filter -Secondary	
111	8273291	1	Valve, Dust Evacuator	
111	70006461	1	Cover	
113	2720058	55 in/ 1.5m	Hose	
115	1001165035	10 26cm	Hose	
116	5272010	1	Bolt M10 x 30	
118	1001247359	1	Fitting, 90 FSNPSM/NPTF	
119	2220261	1	Fitting	
120	2180418	1	Fitting	
121	1001221615	2	Nut M8	
123	0711223	3	Bolt 12 x 75	
124	1001222033	1	Plate	
125	0940070	1	Bumper	
126	8406201	1	Clip	
127	8410009	2	Gear Clamp	
128	2180348	1	Fitting	
129	1001173535	6	Clamp	
130	1001224489	1	Hose	
131	1001225510	1	Decal	
132	1001216531	1	Hose	
133	1001227666	1	Hose	
134	1001224486	1	Hose	
135	0711014	5	Bolt 10 x 30	
138	0100062	AR	Compound Locking	
139	4060805	16 in/ 41cm	Shield	
140	1001227667	1	Hose	

FIGURE 3-32. FORD ENGINE ASSEMBLY (WITH ARCTIC PACKAGE)

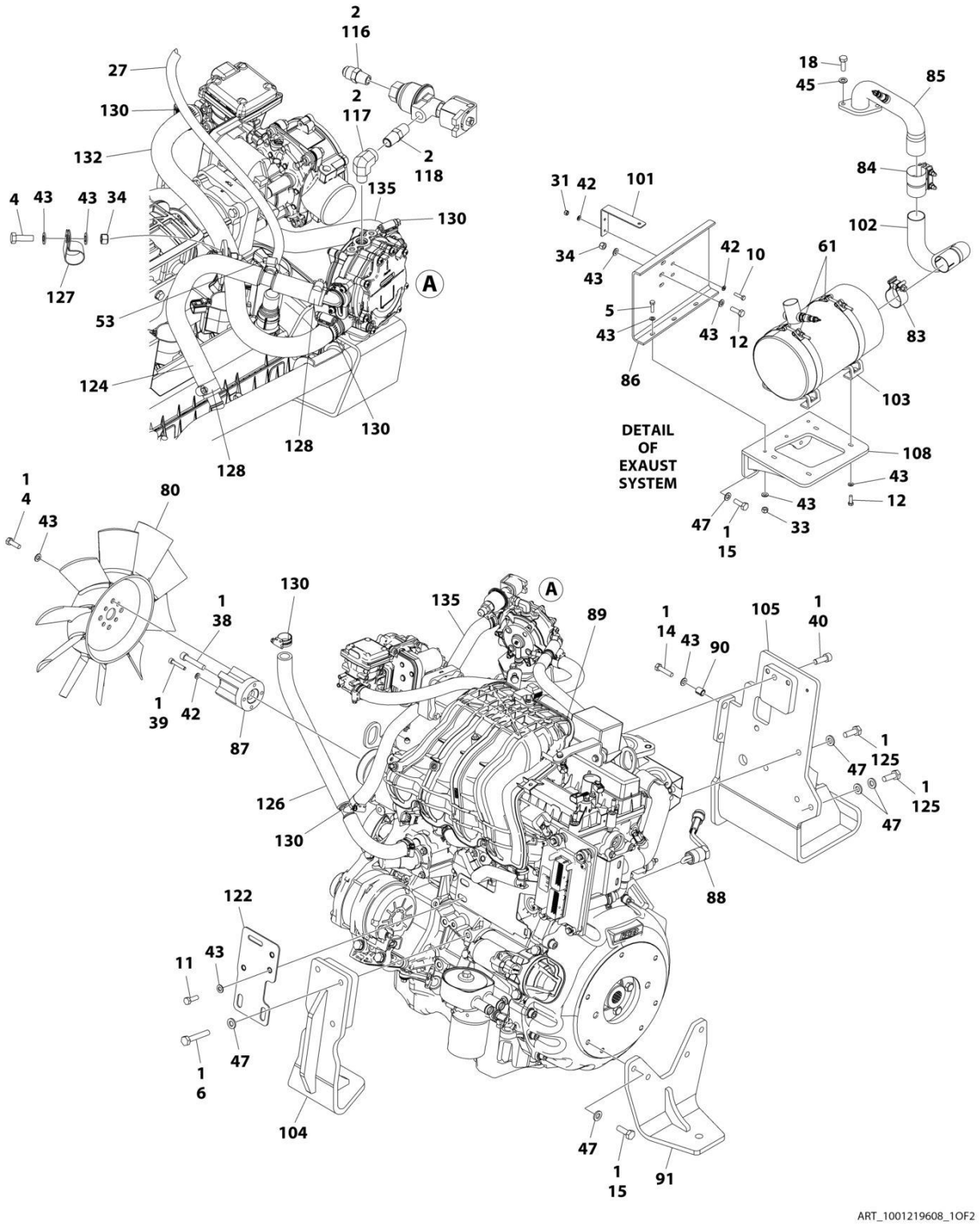

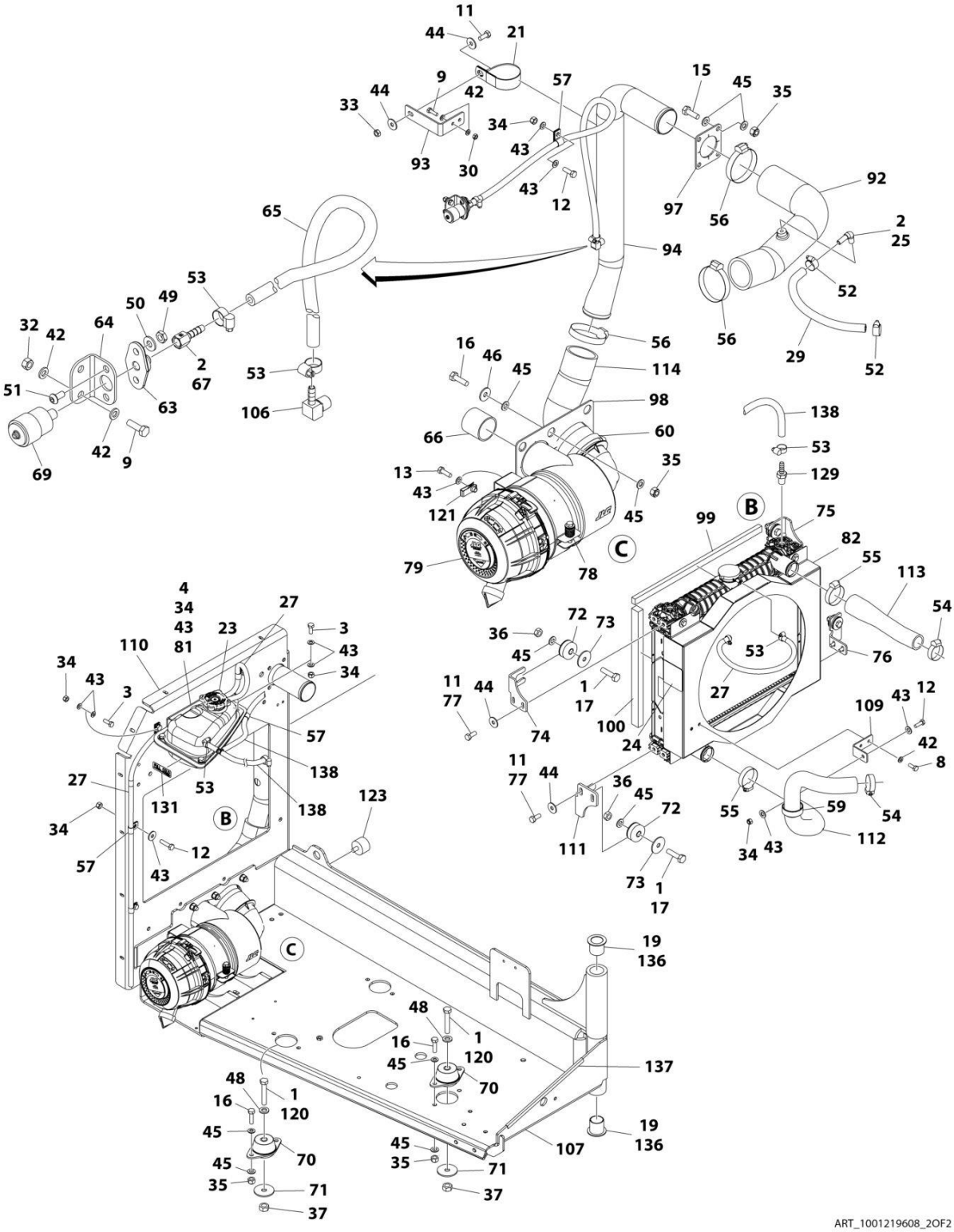
11
44
21
9
42
57
15
45
35
33
44
34
43
93
30
43
12
97
56
92
65
94
2
25
53
52
50
49
32
42
64
56
56
29
52
16
46
45
114
2
67
51
63
53
106
98
138
66
60
53
42
9
69
13
43
121
35
45
129
99
B
75
82
55
113
79
78
C
54
4
34
43
81
23
27
3
43
34
110
36
45
72
73
53
76
34
43
3
11
77
44
1
17
27
12
109
43
57
74
100
24
42
8
27
53
138
11
77
44
36
45
72
123
131
138
B
55
59
54
34
12
111
34
43
112
57
43
73
1
17
C
19
136
48
16
1
45
120
137
70
48
16
1
120
45
19
136
45
70
45
35
71
107
45
35
71
37
37
ART_1001219608_2OF2

FIGURE 3-32. FORD ENGINE ASSEMBLY (WITH ARCTIC PACKAGE)

ITEM	PART NUMBER	QTY	DESCRIPTION	REV
	1001219608	Ref	FORD ENGINE ASSEMBLY	M
1	0100011	AR	Compound, Locking	
2	0100020	AR	Sealant	
3	0700810	3	Bolt M8 x 20	
4	0700812	7	Bolt M8 x 25	
5	0700814	3	Bolt M8 x 30	
6	0711020	3	Bolt M10 x 60	
8	0760608	2	Bolt M6 x 16	
9	0760610	4	Bolt M6 x 20	
10	0760612	2	Bolt M6 x 25	
11	0760810	11	Bolt M8 x 20	
12	0760812	12	Bolt M8 x 25	
13	0760814	2	Bolt M8 x 30	
14	0760815	2	Bolt M8 x 35	
15	0761014	11	Bolt M10 x 30	
16	0761015	12	Bolt M10 x 35	
17	0761016	4	Bolt M10 x 40	
18	0771014	2	Bolt M10 x 30	
19	0961986	2	Bearing, Flange	
21	1320110	1	Clamp	
22	1001187781	1	Tie-Strap (Not Shown)	
23	1001223584	1	Tank, Surge	
24	1703162	2	Decal - Fan Blade	
25	2180467	1	Fitting, Straight NPT/Barb	
27	2720058	55 in/ 1.5m	Hose	
29	1001165035	10 26cm	Hose	
30	3290601	2	Nut M6	
31	3290605	2	Nut M6	
32	3290607	2	Nut M6	
33	3290801	4	Nut M8	
34	3290805	14	Nut M8	
35	3291005	16	Nut M10	
36	3291001	4	Nut M10	
37	3291201	3	Nut M12	
38	3931640	1	Screw 3/8 x 2-1/2	
39	4031711	4	Capscrew M6 x 35	
40	5272010	1	Bolt M10 x 30	
41	4240099	AR	Tie-Strap (Not Shown)	
42	4811700	18	Washer M6	
43	4811900	48	Washer M8	
44	4811902	10	Washer M8	
45	4812000	38	Washer M10	
46	4812002	6	Washer M10	
47	5241000	16	Washer M10	
48	5241200	3	Washer M12	
49	8305401	2	Nut Jam	
50	8307109	2	Washer	
51	8310548	2	Bolt 1/4 x 1/2	
52	8405006	2	Clamp	

ITEM	PART NUMBER	QTY	DESCRIPTION	REV
53	8405009	5	Gear	
54	8405102	2	Clamp	
55	8405104	2	Clamp	
56	8405203	3	Clamp	
57	8406109	6	Clip	
59	8410001	1	Clamp	
60	8410011	1	Clamp	
61	1001128901	2	Strap	
63	1001138173	1	Support	
64	1001138175	1	Bracket	
65	1001138248	31 in/ 77cm	Tube	
66	1001141585	1	Hose	
67	1001141995	1	Fitting, Straight NPT/Barbed	
69	1001149639	1	Indicator, Restriction	
70	1001191610	3	Mount, Motor	
71	1001168018	3	Washer	
72	1001169054	4	Isolator	
73	1001169138	4	Pad, Snubbing	
74	1001169967	1	Bracket	
75	1001170035	1	Bracket	
76	1001176329	1	Bracket	
77	1001180620	AR	Adhesive	
78	1001186426	1	Clamp	
79	1001189979	1	Air Filter Assembly	
79	70005008	4	Element, Filter - Primary	
79	70006460	4	Element, Filter - Secondary	
79	8273291	1	Valve, Dust Evacuator	
79	70006461	1	Cover	
80	1001223042	1	Fan	
81	1001225442	1	Bracket	
82	1001223923	1	Radiator	
83	1001215681	1	Clamp	
84	1001215974	1	Clamp	
85	1001216075	1	Pipe, Exhaust	
86	1001216092	1	Shield, Heat	
87	1001216201	1	Adapter	
88	1001216393	1	Heater, Block	
89	1001216910	1	Ford Engine Prep Assembly (See Separate Breakdown in this Section)	
90	1001216919	2	Sleeve	
91	1001216995	1	Mount, Engine Rear	
92	1001217032	1	Tube	
93	1001217046	1	Bracket	
94	1001217090	1	Tube	
97	1001217174	1	Seal	
98	1001217175	1	Seal	
99	1001217183	2	Seal	
100	1001217185	2	Seal	
101	1001217186	1	Support	
102	1001217317	1	Pipe	
103	1001217543	2	Mount	

ITEM	PART NUMBER	QTY	DESCRIPTION	REV
104	1001218362	1	Mount	
105	1001218449	1	Bracket	
106	1001134488	1	Fitting	
107	1001219259	1	Support	
108	1001219345	1	Muffler	
109	1001219361	1	Support	
110	1001219363	1	Plate	
111	1001219480	1	Bracket	
112	1001219611	1	Hose	
113	1001219612	1	Hose	
114	1001219613	1	Tube	
116	2180418	1	Fitting	
117	1001247359	1	Fitting, 90 FSNPSM/NPTF	
118	2220261	1	Fitting	
120	0711223	3	Bolt M12 x 75	
121	1001221615	2	Nut M8	
122	1001222033	1	Plate	
123	0940070	1	Bumper	
124	1001227666	1	Hose	
125	0711014	5	Bolt M10 x 30	
126	1001224489	1	Hose	
127	8406201	1	Clip	
128	8410009	2	Gear Clamp	
129	2180348	1	Fitting	
130	1001173535	6	Clamp	
131	1001225510	1	Decal	
132	1001216531	1	Hose	
135	1001224486	1	Hose	
136	0100062	AR	Compound Locking	
137	4060805	16 in/ 41cm	Shield	
138	1001227667	1	Hose	

FIGURE 3-33. FORD ENGINE PREP ASSEMBLY

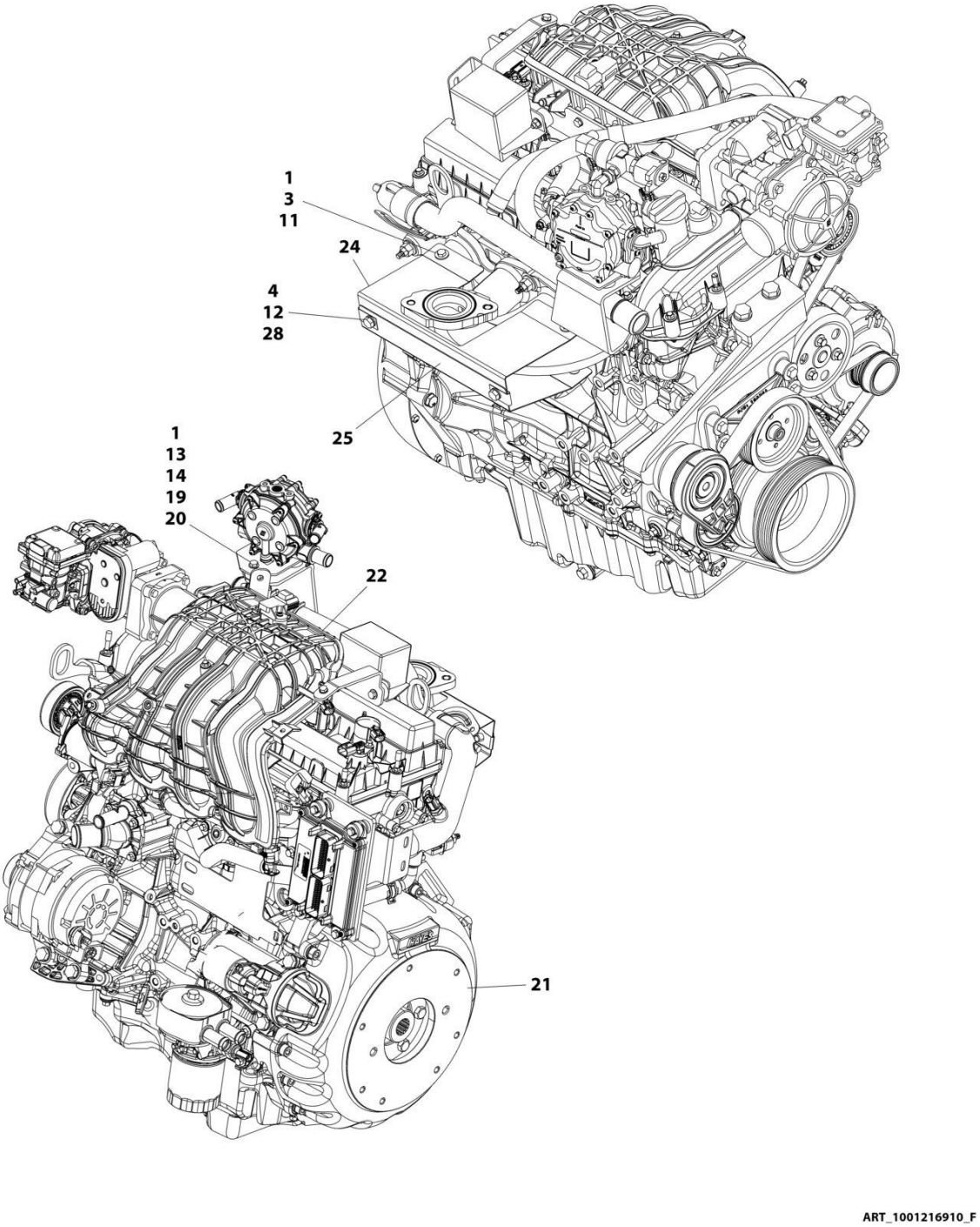

FIGURE 3-33. FORD ENGINE PREP ASSEMBLY

ITEM	PART NUMBER	QTY	DESCRIPTION	REV
	1001216910	Ref	FORD ENGINE PREP ASSEMBLY	F
1	0100011	AR	Compound, Locking	
3	0760605	4	Bolt M6 x 10	
4	0760807	2	Bolt M8 x 14	
11	4811702	4	Washer M6	
12	4811900	2	Washer M8	
13	5250605	3	Bolt M6 x 10	
14	5260600	1	Nut M6 Class 10	
19	1001211794	3	Mount, Isolator	
20	1001227769	1	Plate	
21	1001213810	1	Pump Coupling Kit	
21	70006134	1	Coupling	
21	70006135	1	Housing	
21	70006136	1	Hardware Kit	
22	1001216065	1	Ford Engine Assembly (See Separate Breakdown in this Section)	
24	1001216768	1	Bracket	
25	1001216769	1	Bracket	
28	1001149160	2	Nut, Tinnerman M8	

FIGURE 3-34. FORD ENGINE BRACKETS AND EXHAUST MANIFOLD INSTALLATION

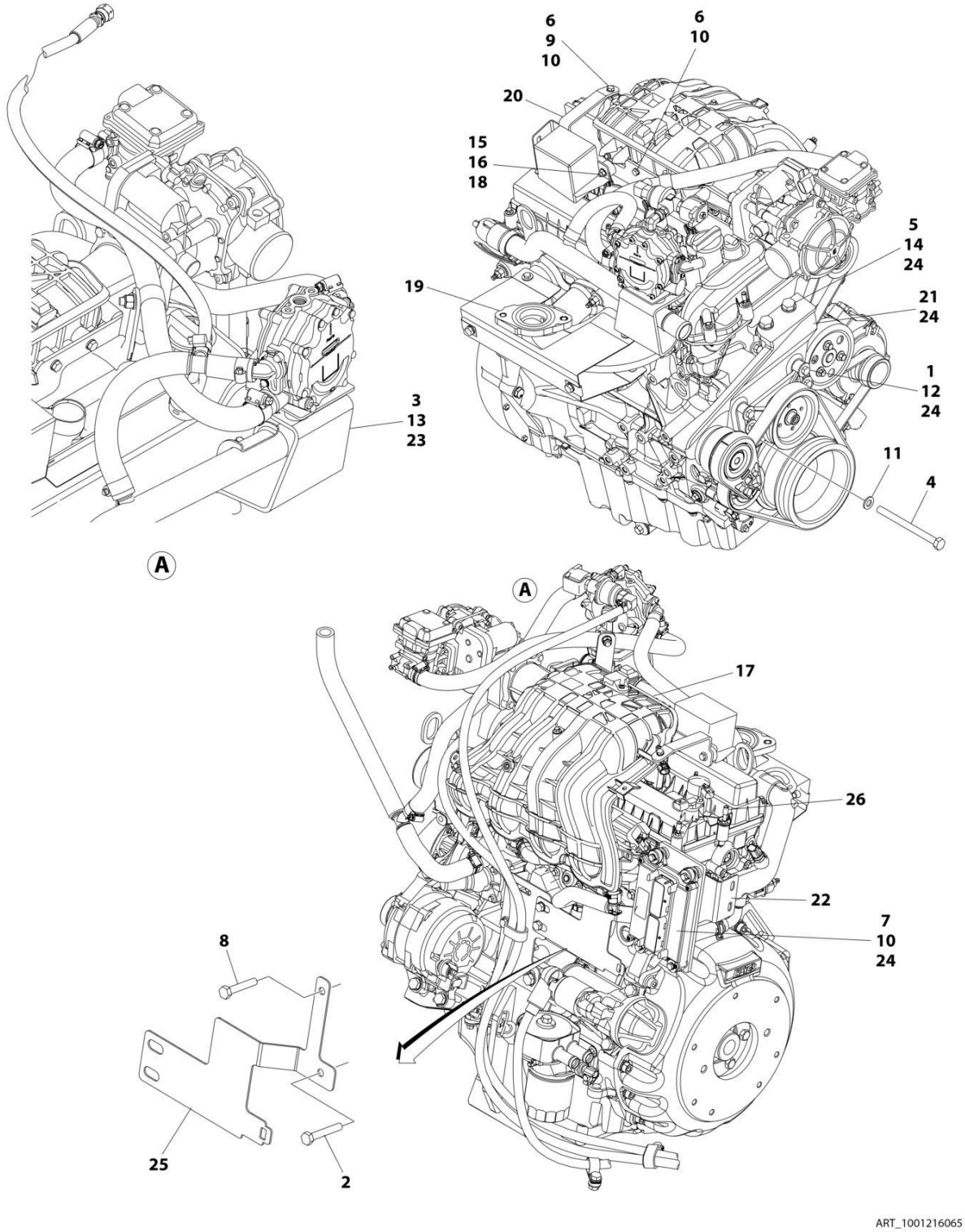

FIGURE 3-34. FORD ENGINE BRACKETS AND EXHAUST MANIFOLD INSTALLATION

ITEM	PART NUMBER	QTY	DESCRIPTION	REV
	1001216065	Ref	FORD ENGINE ASSEMBLY - BRACKETS/EXHAUST MANIFOLD	N
1	0700816	4	Bolt M8 x 40	
2	0700818	1	Bolt M8 x 50	
3	0701014	2	Bolt M10 x 30	
4	0710827	1	Bolt M8 x 100 Grade 10.9	
5	0711216	2	Bolt M12 x 40	
6	0760610	3	Bolt M6 x 20	
7	0760615	4	Bolt M6 x 35	
8	0760817	1	Bolt M8 x 45	
9	3290601	1	Nut M6	
10	4811700	8	Washer M6	
11	4811900	1	Washer M8	
12	4811902	4	Washer M8	
13	4812000	1	Washer M10	
14	4812100	2	Washer M12	
15	5250605	2	Bolt M6 x 10	
16	5260600	2	Nut M6 Class 10	
17	1001210448	1	Engine, Ford 2.5L (See Separate Breakdown in this Section)	
18	1001211794	2	Mount	
19	1001214827	1	Manifold, Exhaust	
20	1001215384	1	Bracket	
21	1001216071	1	Bracket	
22	1001216144	1	Support, Muffler	
23	1001227772	1	Mount, Vaporizer	
24	0100011	AR	Compound, Locking	
25	1001221545	1	Plate	
26	1001222641	6	Cap	

FIGURE 3-35. FORD ENGINE DRIVE BELT INSTALLATION (MACHINES WITHOUT GENERATOR)

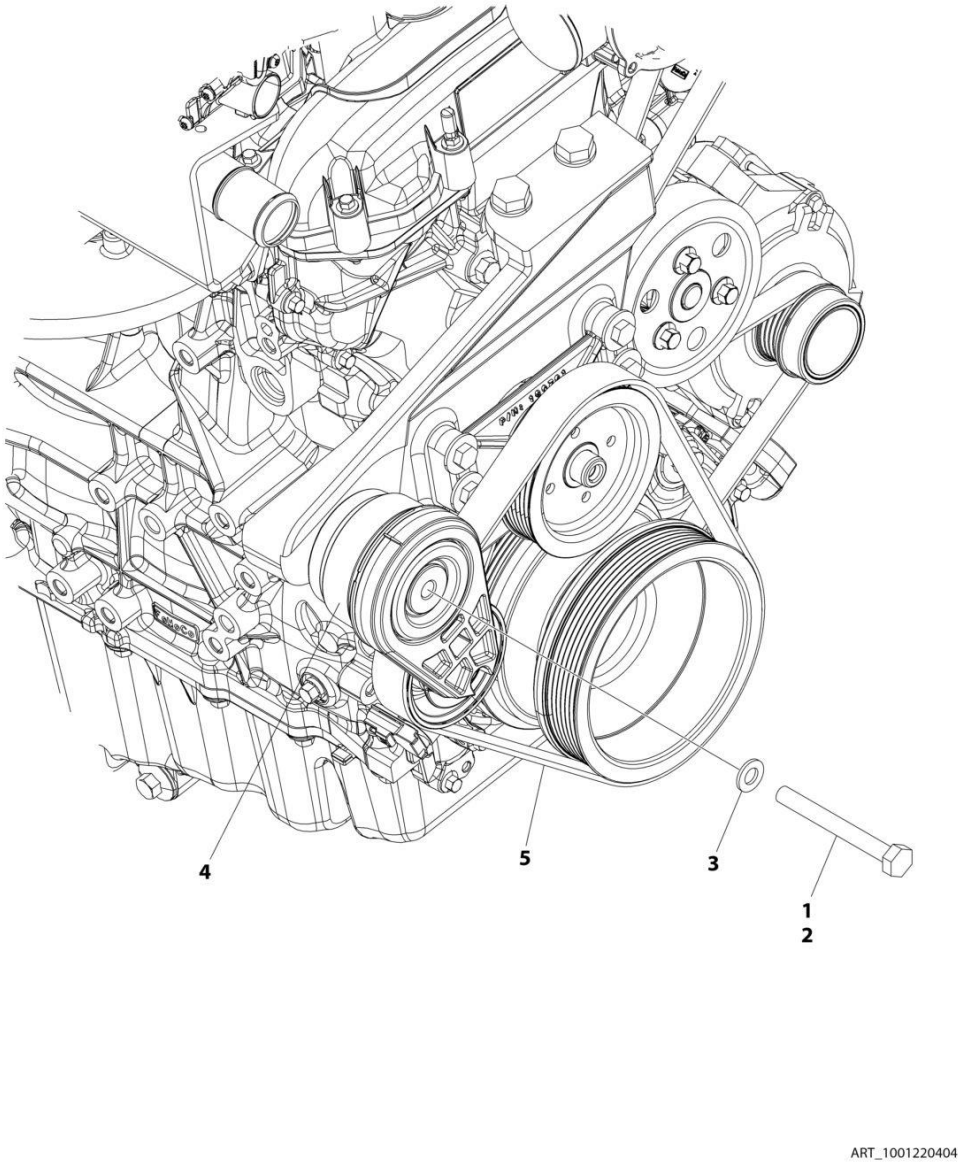

FIGURE 3-35. FORD ENGINE DRIVE BELT INSTALLATION (MACHINES WITHOUT GENERATOR)

ITEM	PART NUMBER	QTY	DESCRIPTION	REV
	1001220404	Ref	DRIVE BELT INSTALLATION	C
1	0100011	AR	Compound, Locking	
2	0701026	1	Bolt M10 x 90	
3	4812002	1	Washer M10	
4	1001216300	1	Pulley	
5	1001216619	1	V-Belt	

FIGURE 3-36. FORD ENGINE COMPONENTS

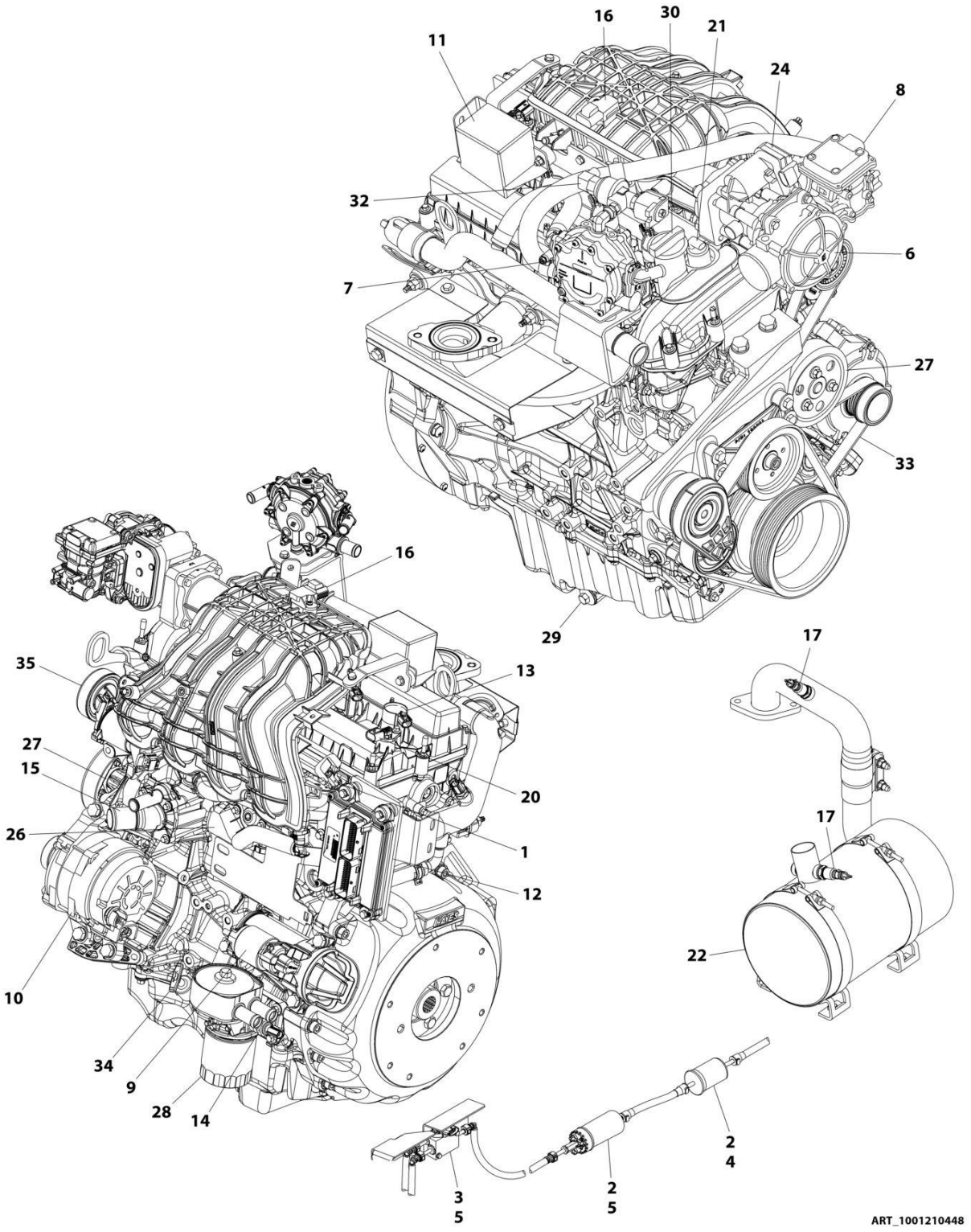

FIGURE 3-36. FORD ENGINE COMPONENTS

ITEM	PART NUMBER	QTY	DESCRIPTION	REV
	1001210448	Ref	FORD ENGINE COMPONENTS	H
1	70006145	4	Injector, Fuel	
1	70006147	1	Rail, Fuel	
2	70006150	1	Pump, Fuel	
2	70006154	1	Fitting M10	
3	70006151	1	Block, Fuel	
3	70006152	2	Fitting SAE6	
3	70006153	1	Fitting SAE3	
3	70006189	1	Harness, Fuel Block	
4	70006155	1	Filter, Fuel	
5	7022162	8	Clamp	
5	70006157	8	Clip, Fuel Quick Disconnect	
6	70006158	1	Mixer, LP	
6	70006168	1	Mixer Diaphragm Replacement Kit	
6	70006159	1	Adapter, Mixer to Governor	
6	70006160	1	O-Ring, Mixer to Adapter	
6	70006161	1	Seal, Mixer to Adapter	
7	70006162	1	Regulator, LP Vapor	
7	70006166	2	Fitting	
7	70006167	1	Fitting, Straight	
7	70006165	2	Isolator, Rubber	
8	70006163	1	Regulator, Direct Electronic Pressure	
8	70006164	1	Adapter, Fitting 90	
9	70006169	1	Starter	
9	70006233	1	Harness, Alternator/Starter	
10	70006170	1	Alternator	
11	70006173	1	Cover, Relay Box	
11	70006171	2	Relay (Fuel Pump & Power)	
11	70006172	1	Relay (Starter)	
11	70006175	1	Fuse - 20Amp (Starter)	
11	70006174	1	Decal - Relay Box Cover	
11	70006188	1	Harness, Engine	
11	70006165	2	Isolator, Rubber	
12	70006176	1	Module - Engine Control Unit (ECU/GCP)	
12	70006191	1	Software & Diagnostic Cable	
13	70006177	4	Coil and Boot Assembly	
13	70006178	4	Plug, Spark	
14	70006179	1	Switch, Oil Pressure	
15	70006180	1	Sensor, Knock	
16	70006181	1	Sensor, TMAP	
17	70006182	2	Sensor, O2	
18	70006183	1	Sensor, Coolant Temperature (Not Shown - Located Rear of Engine Block)	
19	70006184	1	Sensor, Crank Position (Not Shown - Located at Front RH Side of Block)	
20	70006185	1	Sensor, Cam Position	
21	70006186	1	Solenoid, Timing	
21	70006187	1	Grommet, Rubber	
22	70006194	1	Muffler	
22	70006195	1	Plug (Located at Muffler Outlet)	

ITEM	PART NUMBER	QTY	DESCRIPTION	REV
23		Ref	Gasket Options (Not Shown)	
23	70006196	1	Gasket, Exhaust Manifold to Head	
23	70006197	1	Gasket, Exhaust Manifold Outlet	
23	70006200	1	Gasket, Intake Manifold to Head	
23	70006219	1	Gasket Set - Camshaft Cover	
23	70006225	1	Gasket, Cylinder Head	
24	70006198	1	Governor	
24	7027404	1	Gasket, Governor Actuator	
24	70006199	1	Gasket, Governor to Intake Manifold Adapter	
25	70006203	1	Flywheel (Not Shown)	
26	70006205	1	Thermostat (Includes Housing)	
26	70006206	1	Gasket, Water Inlet	
27	70006207	1	Pump, Water	
27	70006208	1	O-Ring, Water Pump	
27	See Note	NSS	Pulley, Water Pump (Note: Not Available for Purchase at This Time)	
28	70006213	1	Filter, Oil	
29	70006215	1	Plug, Oil Drain	
29	70006217	1	Gasket, Oil Drain Plug	
30	70006221	1	Cap, Oil Fill	
31	70006232	1	Sensor, Crank (Not Shown)	
32	70006235	1	Valve, Lock-Off (Includes Filter)	
33	70006202	1	Belt	
34	70006236	1	Dipstick	
35	70007108	1	Belt Tensioner	

FIGURE 3-37. PUMP COUPING KIT (DEUTZ ENGINES)

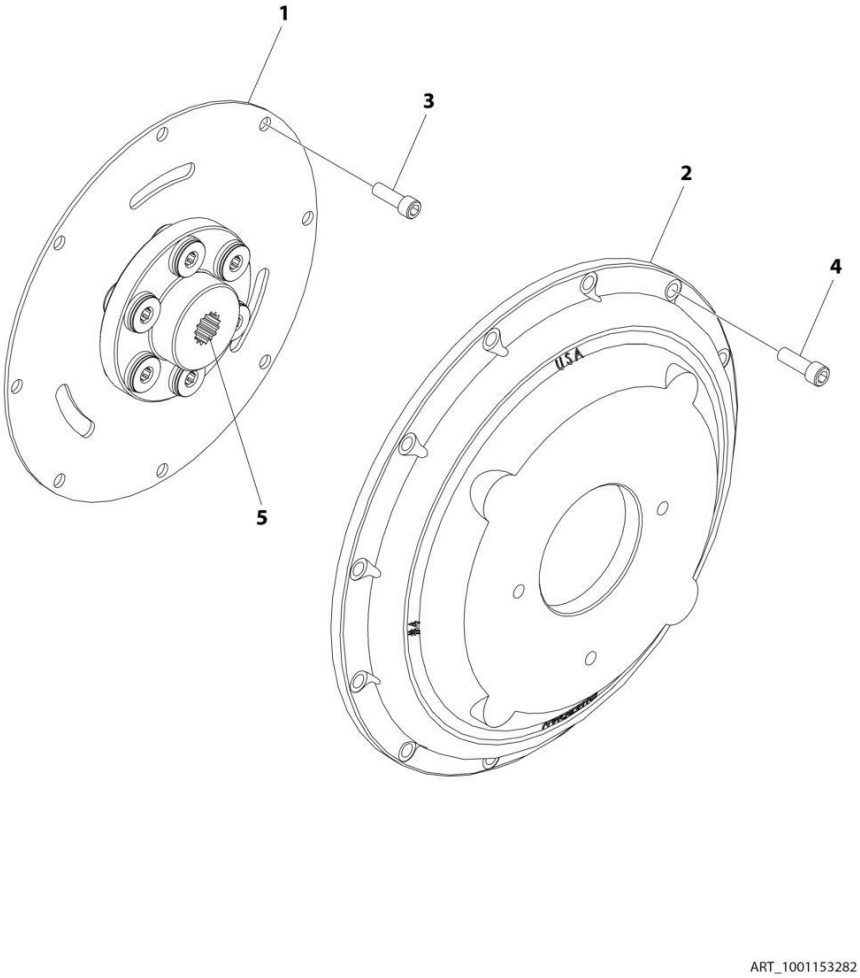

FIGURE 3-37. PUMP COUPING KIT (DEUTZ ENGINES)

ITEM	PART NUMBER	QTY	DESCRIPTION	REV
	1001153282	Ref	PUMP COUPLING KIT	E
1	70004183	1	Coupling Guardian	
2	See Note	NSS	Plate, Pump Adapter (Note: Use p/n 1001153282)	
3	See Note	8	Capscrew M10 x 20 Grade 10.9 (Note: Not Available - Purchase Locally or Purchase Kit)	
4	See Note	12	Capscrew M10 x 25 Grade 10.9 (Note: Not Available - Purchase Locally or Purchase Kit)	
5	3020021	AR	Grease, Coupling	

FIGURE 3-38. HYDROSTATIC PUMP ASSEMBLY

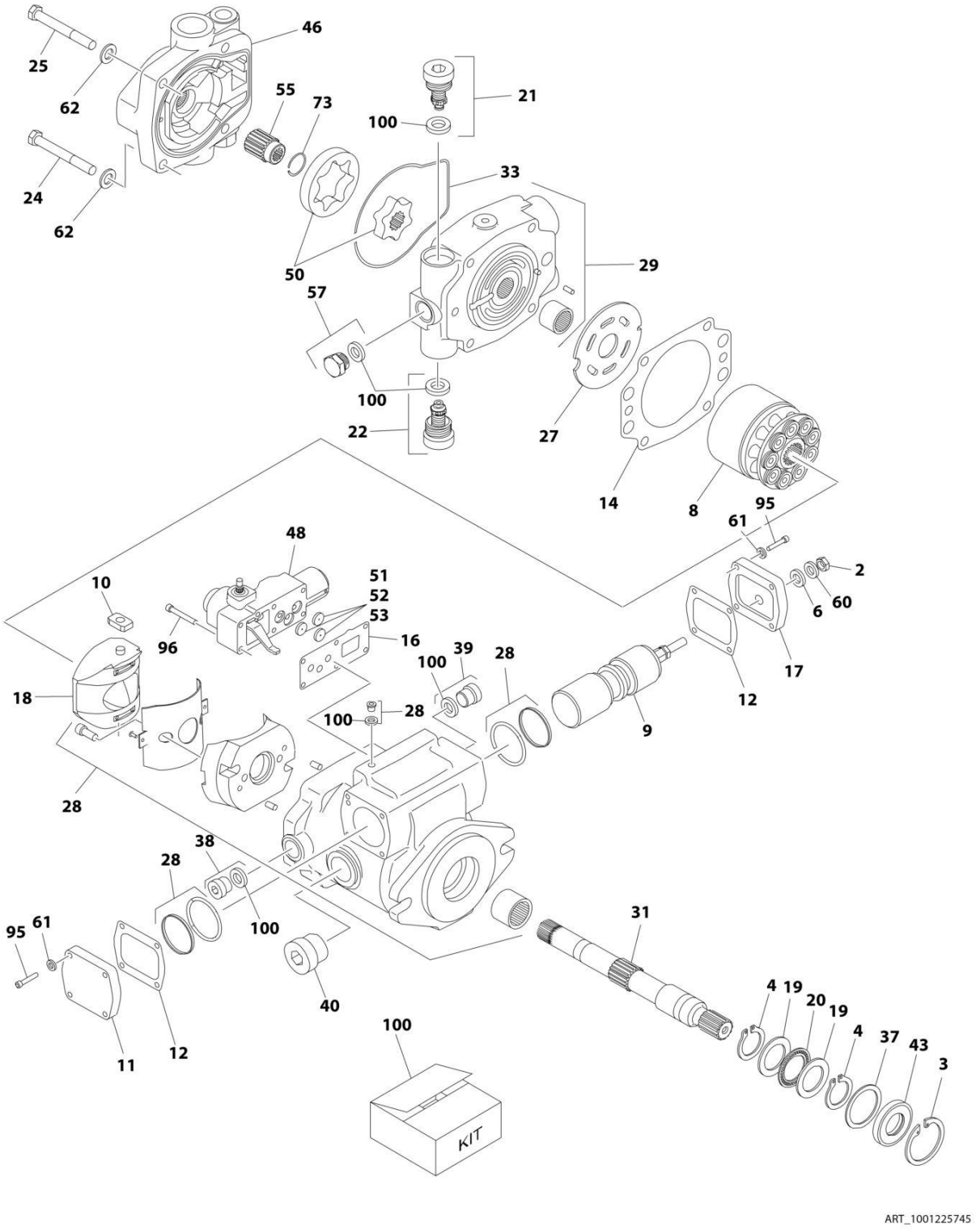

FIGURE 3-38. HYDROSTATIC PUMP ASSEMBLY

ITEM	PART NUMBER	QTY	DESCRIPTION	REV
	1001225745	Ref	HYDROSTATIC PUMP ASSEMBLY	A
2	70004329	1	Nut	
3	See Note	NSS	Ring, Retaining (Note: Use Item 100)	
4	See Note	NSS	Ring, Retaining (Note: Use Item 100)	
6	See Note	NSS	Washer, Seal (Note: Use Item 100)	
8	70004331	1	Cylinder Block Assembly	
9	70004332	1	Servo Piston Assembly	
10	70004333	1	Follower, Servo Piston	
11	70005458	1	Cover	
12	See Note	NSS	Gasket, Cover (Note: Use Item 100)	
14	See Note	NSS	Gasket, Housing (Note: Use Item 100)	
16	See Note	NSS	Gasket, Control Housing (Note: Use Item 100)	
17	70005459	1	Cover	
18	70004336	1	Camplate Assembly	
19	7004907	2	Race, Thrust	
20	7004908	1	Bearing, Thrust	
21	70004337	1	Relief Valve Assembly	
22	70004337	1	Relief Valve Assembly	
24	70004338	2	Capscrew	
25	70004338	2	Capscrew	
27	70004340	1	Plate, Valve	
28	See Note	NSS	Housing (Note: Not Available - Purchase Assembly)	
29	70005460	1	End Cover Assembly	
31	70004342	1	Shaft, Drive	
33	See Note	NSS	O-Ring (Note: Use Item 100)	
37	7004906	1	Washer	
38	70005461	1	Plug	
39	70005461	1	Plug	
40	70005462	1	Plug	
43	See Note	NSS	Seal, Shaft (Note: Use Item 100)	
46	70004343	1	Adapter, Charge Pump	
48	70004344	1	Servo Control Assembly	
50	70004345	1	Gerotor	
51	70004346	1	Orifice	
52	70004346	1	Orifice	
53	70004346	1	Orifice	
55	70004347	1	Coupler	
57	70005463	1	Plug	
60	70004348	1	Washer	
61	70004349	8	Washer	
62	70004350	4	Washer	
73	70004351	1	Ring, Retaining	
95	70005464	8	Capscrew	
96	70005465	6	Capscrew	
100	70004352	1	Seal Kit - Pump (Includes Items 3, 4, 6, 12, 14, 16, 33 & 43 and Valve and Plug O-Rings and Seals)	

FIGURE 3-39. VARIABLE PUMP ASSEMBLY

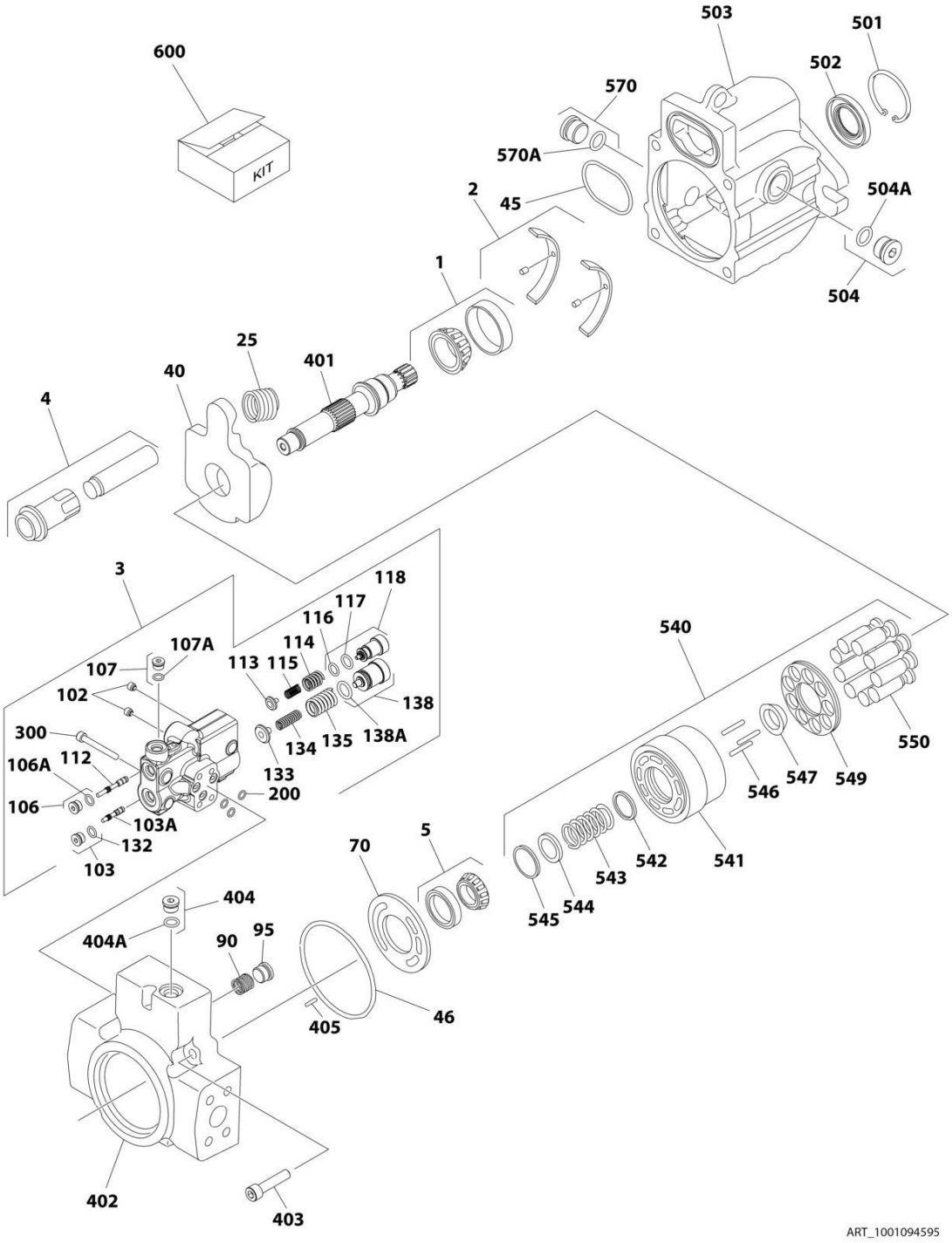

FIGURE 3-39. VARIABLE PUMP ASSEMBLY

ITEM	PART NUMBER	QTY	DESCRIPTION	REV
	1001094595	Ref	VARIABLE PUMP ASSEMBLY	A
1	7023947	1	Bearing, Front (Includes Cup and Cone)	
2	7023948	1	Bearings, Swash Plate (Includes Both Sides and Pins)	
3	7023956	1	Control Valve Assembly (Includes Items 102-300)	
4	7023949	1	Servo Piston Assembly	
5	7023950	1	Bearing, Rear (Includes Cup and Cone)	
25	7023951	1	Spring	
40	7023952	1	Swash Plate	
45	See Note	NSS	O-Ring (Note: Use Item 600)	
46	See Note	NSS	O-Ring (Note: Use Item 600)	
70	70001954	1	Plate, Valve	
90	70001955	1	Spring, Check Valve	
95	70001956	1	Poppet, Check Valve	
102	See Note	NSS	Setscrew (Note: Use Item 3)	
103	See Note	NSS	Plug (Note: Use Item 3)	
103A	See Note	NSS	O-Ring (Note: Use Item 600)	
106	See Note	NSS	Plug (Note: Use Item 3)	
106A	See Note	NSS	O-Ring (Note: Use Item 600)	
107	See Note	NSS	Plug (Note: Use Item 3)	
107A	See Note	NSS	O-Ring (Note: Use Item 600)	
112	See Note	NSS	Spool, Control (Note: Use Item 3)	
113	See Note	NSS	Guide, Spring (Note: Use Item 3)	
114	See Note	NSS	Spring (Note: Use Item 3)	
115	See Note	NSS	Spring (Note: Use Item 3)	
116	See Note	NSS	O-Ring (Note: Use Item 600)	
117	See Note	NSS	Ring, Back-up (Note: Use Item 600)	
118	See Note	NSS	Plug, Adjusting (Note: Use Item 3)	
132	See Note	NSS	Spool, Control (Note: Use Item 3)	
133	See Note	NSS	Guide, Spring (Note: Use Item 3)	
134	See Note	NSS	Spring (Note: Use Item 3)	
135	See Note	NSS	Spring (Note: Use Item 3)	
138	See Note	NSS	Plug, PC Adjusting (Note: Use Item 3)	
138A	See Note	NSS	O-Ring (Note: Use Item 600)	
200	See Note	NSS	Ring, Seal (Note: Use Item 600)	
300	7023957	4	Screw	
401	7023958	1	Shaft	
402	70001957	1	Cap, End	
403	7023960	4	Screw	
404	7022318	1	Plug	
404A	See Note	NSS	O-Ring (Note: Use Item 600)	
405	7023961	1	Pin	
501	7023962	1	Ring, Retaining	
502	See Note	NSS	Seal, Lip (Note: Use Item 600)	
503	See Note	NSS	Housing (Note: Not Available - Purchase Assembly)	
504	7023964	1	Plug	
504A	7007415	1	O-Ring	
540	7023965	1	Cylinder Block Assembly	
541	See Note	NSS	Block, Cylinder (Note: Use Item 540)	
542	7024868	1	Washer	
543	7024867	1	Spring	

ITEM	PART NUMBER	QTY	DESCRIPTION	REV
544	7022314	1	Retainer, Spring	
545	7022311	1	Ring, Retaining	
546	7021275	3	Pin, Slipper	
547	7024864	1	Guide, Slipper	
549	7024866	1	Retainer, Slipper	
550	7023966	9	Piston Assembly	
570	7023964	1	Plug	
570A	7007415	1	O-Ring	
600	7023967	1	Seal Kit - Complete (Includes Items 45, 46, 103A, 106A, 107A, 118, 138A, 200, 444A & 502)	

FIGURE 3-40. EXHAUST PIPE INSTALLATION - DEUTZ TD2.9L4 ENGINES

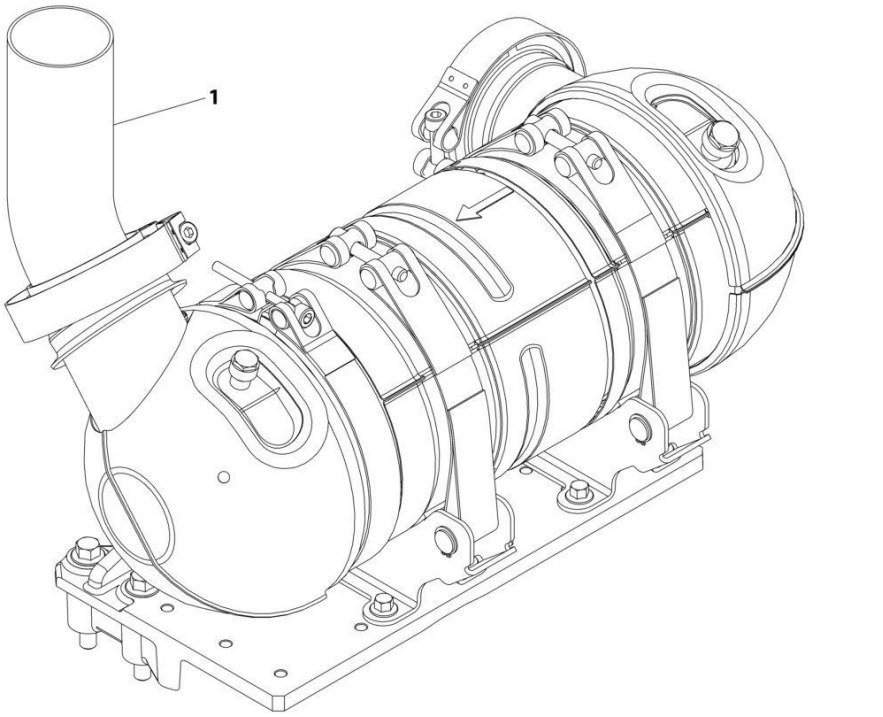

FIGURE 3-40. EXHAUST PIPE INSTALLATION - DEUTZ TD2.9L4 ENGINES

ITEM	PART NUMBER	QTY	DESCRIPTION	REV
	1001216220	Ref	EXHAUST PIPE INSTALLATION	A
1	1001149908	1	Pipe, Exhaust	

FIGURE 3-41. EXHAUST PIPE INSTALLATION - DEUTZ TD2.9L4 (STAGE V) ENGINES

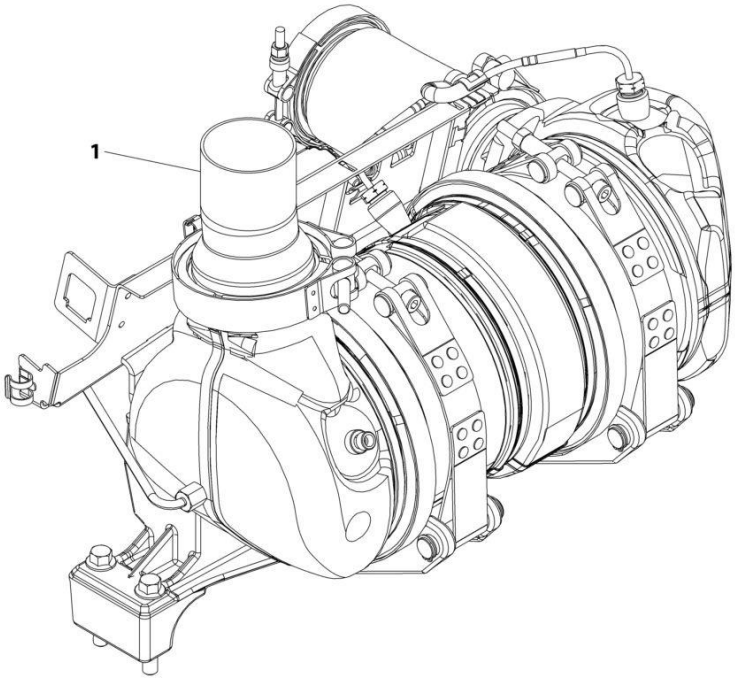

ART_1001236334

FIGURE 3-41. EXHAUST PIPE INSTALLATION - DEUTZ TD2.9L4 (STAGE V) ENGINES

ITEM	PART NUMBER	QTY	DESCRIPTION	REV
	1001236334	Ref	EXHAUST PIPE INSTALLATION	B
1	1001236335	1	Pipe, Exhaust	

FIGURE 3-42. EXHAUST PIPE INSTALLATION - FORD ENGINES

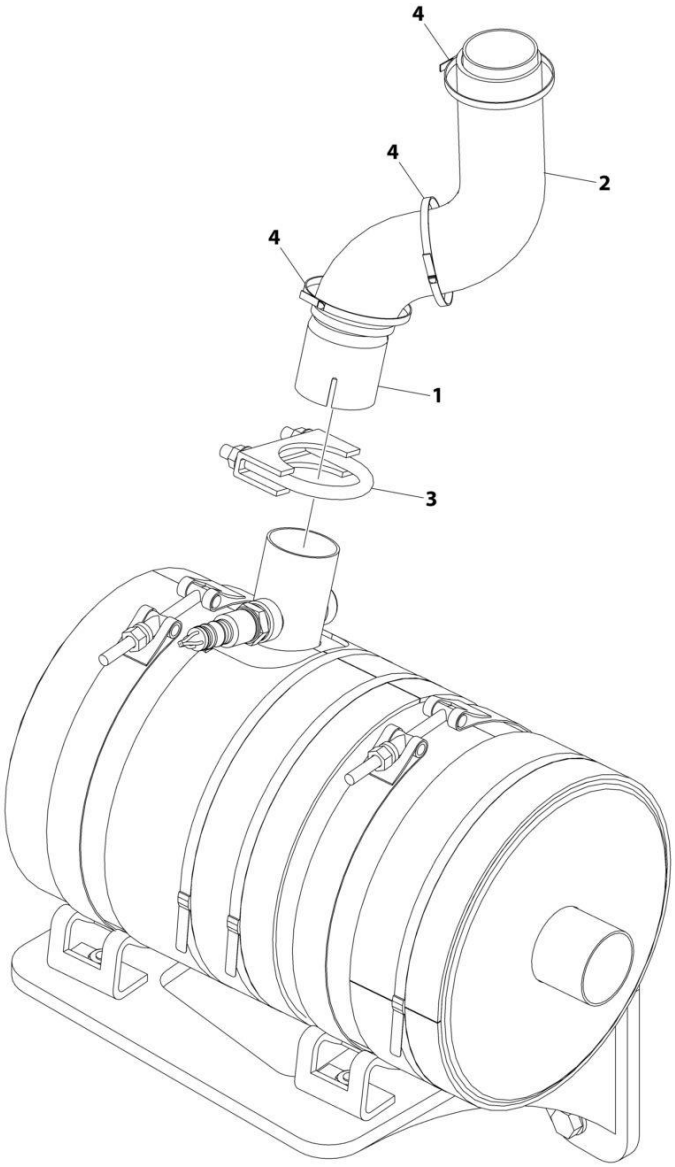

ART_1001220141

FIGURE 3-42. EXHAUST PIPE INSTALLATION - FORD ENGINES

ITEM	PART NUMBER	QTY	DESCRIPTION	REV
	1001220141	Ref	EXHAUST PIPE INSTALIATION	B
1	1001217478	1	Tail Pipe	
1	1001217477	1	Tail Pipe with Spark Arrestor	
2	1001218089	1	Insulate	
3	1001221397	1	Clamp	
4	1001100825	3	Strap	

FIGURE 3-43. SPARK ARRESTOR MUFFLER INSTALLATION - DEUTZ D2011 ENGINES

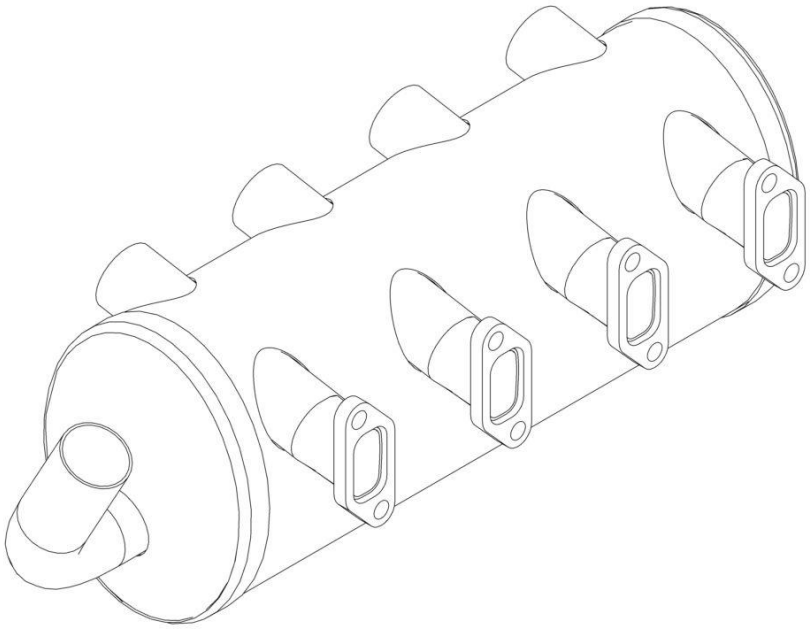

ART_1001257283

FIGURE 3-43. SPARK ARRESTOR MUFFLER INSTALLATION - DEUTZ D2011 ENGINES

ITEM	PART NUMBER	QTY	DESCRIPTION	REV
	1001257283	Ref	MUFFLER INSTALLATION SPARK ARRESTOR	A
	See Note	1	Muffler, (Note: Use P/N 1001257283)	

FIGURE 3-44. FUEL-WATER SEPARATOR INSTALLATION - DEUTZ D2011 ENGINES

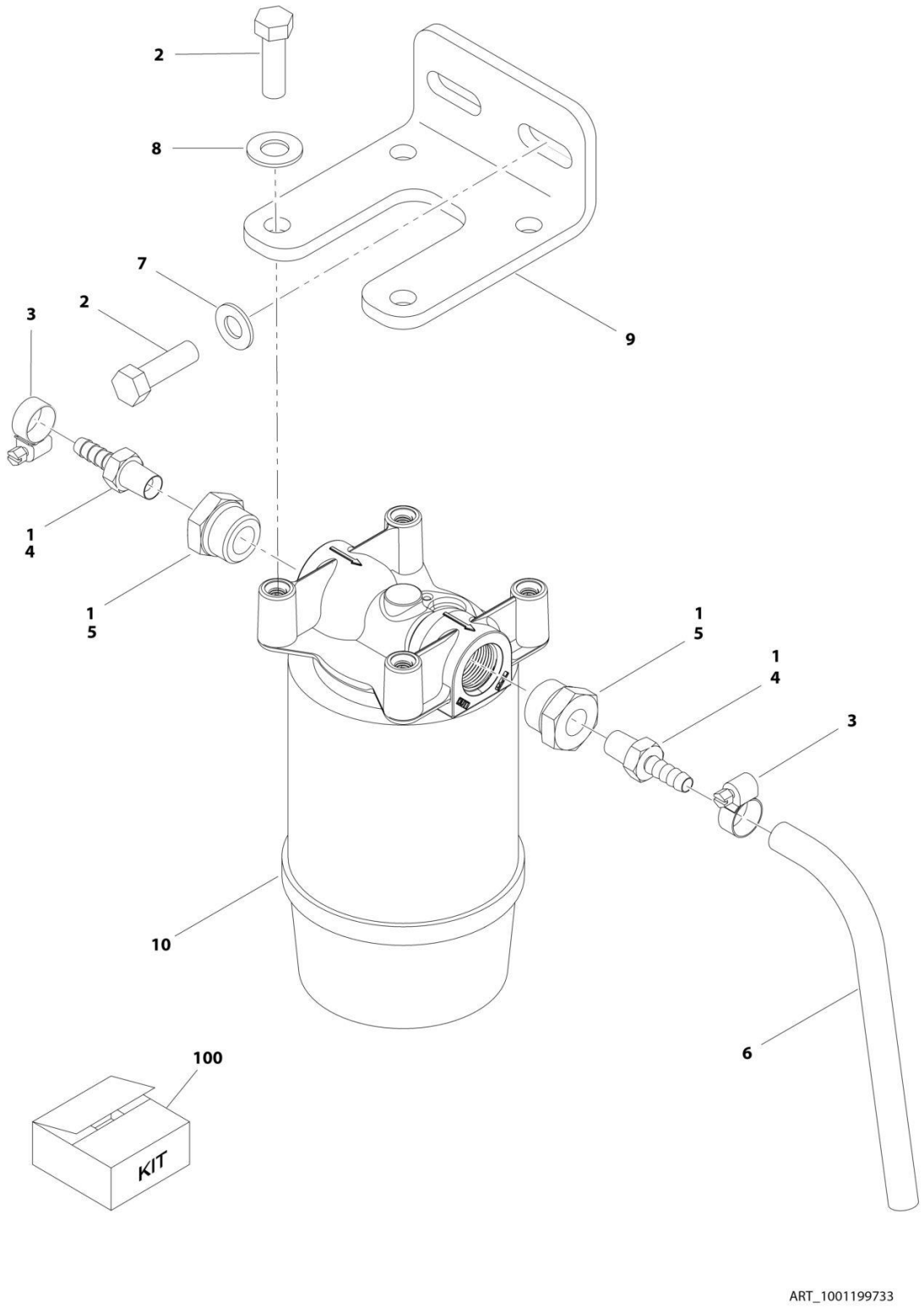

FIGURE 3-44. FUEL-WATER SEPARATOR INSTALLATION - DEUTZ D2011 ENGINES

ITEM	PART NUMBER	QTY	DESCRIPTION	REV
	1001199733	Ref	FUEL-WATER SEPARATOR INSTALLATION - DEUTZ TD2011 (OPTIONAL)	A
1	0100079	1	Sealant	
2	0641610	6	Bolt 3/8 X 1-1/4	
3	1320022	2	Clamp	
4	2180348	2	Fitting, Straight	
5	2220816	2	Fitting, Straight	
6	2720058	35 in/ 89cm	Hose	
7	4711600	2	Washer 3/8	
8	4711700	4	Washer 7/16	
9	1001188884	1	Bracket	
10	1001188887	1	Fuel/Water Separator Assembly	
10	1001202280	1	Head	
10	1001202281	1	Element	
100	1001204667	1	Water/Separator Add-On Kit	

FIGURE 3-45. FUEL-WATER SEPARATOR INSTALLATION - DEUTZ TD2.9L4 ENGINES

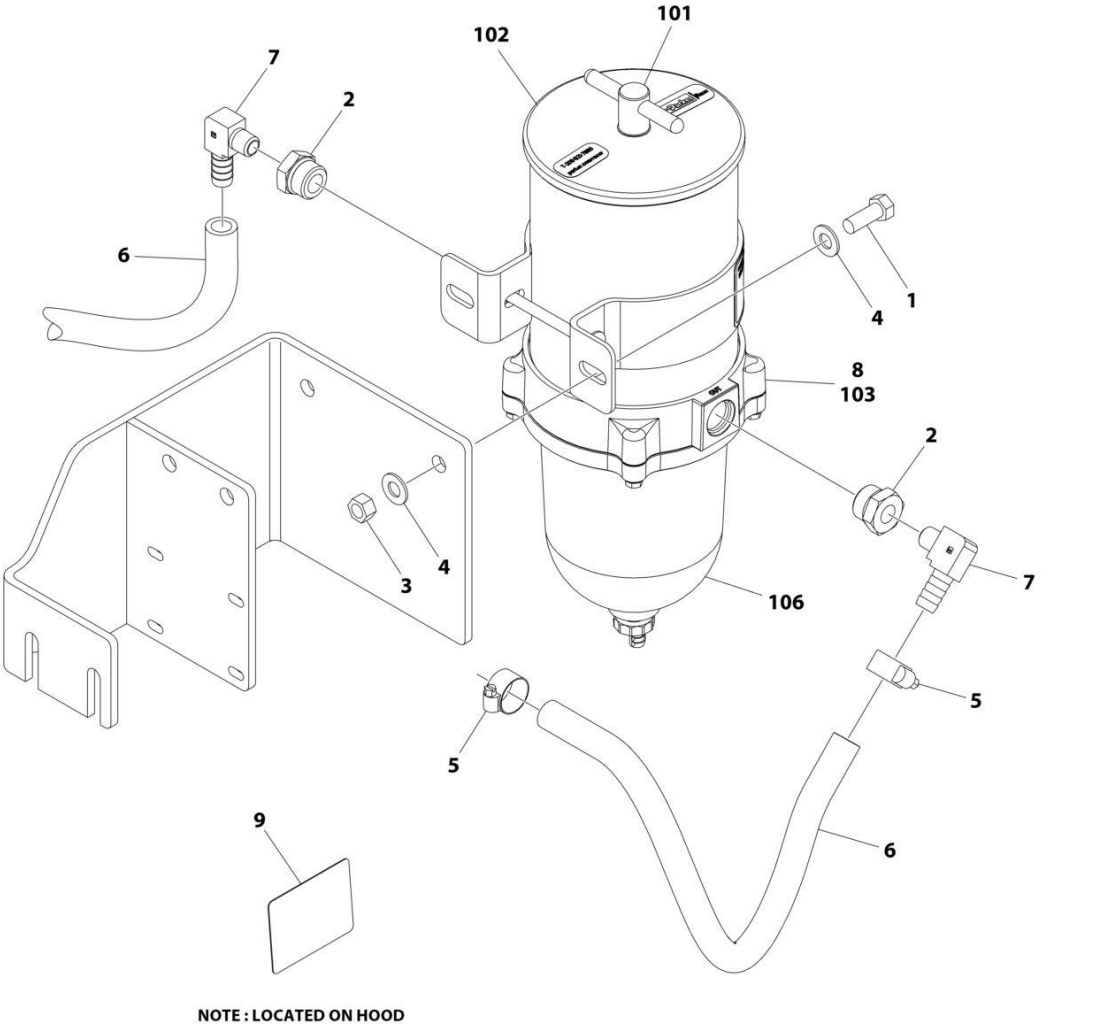

ART_1001230032

FIGURE 3-45. FUEL-WATER SEPARATOR INSTALLATION - DEUTZ TD2.9L4 ENGINES

ITEM	PART NUMBER	QTY	DESCRIPTION	REV
	1001230032	Ref	FUEL FILTER INSTALLATION	A
1	0641608	2	Bolt 3/8 x 1	
2	2220816	2	Fitting, Straight NPT	
3	3311605	2	Nut 3/8	
4	4711600	4	Washer 3/8	
5	8405006	2	Clamp	
6	1001154405	54 in/ 1.65m	Hose	
7	1001178797	2	Fitting, 90	
8	1001222817	1	Fuel Filter Assembly (See Items 101-107 for Breakdown)	
9	1001226923	1	Decal - Fuel Water Separator	
	1001222817	Ref	FUEL FILTER ASSEMBLY	
101	70006403	1	T-Handle Kit (Includes O-Ring)	
102	70006404	1	Lid Kit (Includes Gasket)	
103	70006405	1	Element	
104	70006406	1	Checkball & Gasket Kit (Not Shown)	
105	70006407	1	Centrifuge and Baffle Kit (Not Shown)	
106	70006409	1	Bowl Kit (Includes Gasket, O-Ring and Drain)	
106	70006408	1	Gasket, Bowl	
107	70006410	1	Bowl Ring Kit (Includes Gasket & Hardware) (Not Shown)	

FIGURE 3-46. RIGHT ENGINE SUPPORT INSTALLATION (DEUTZ D2011 ENGINES MACHINES WITHOUT GENERATORS)

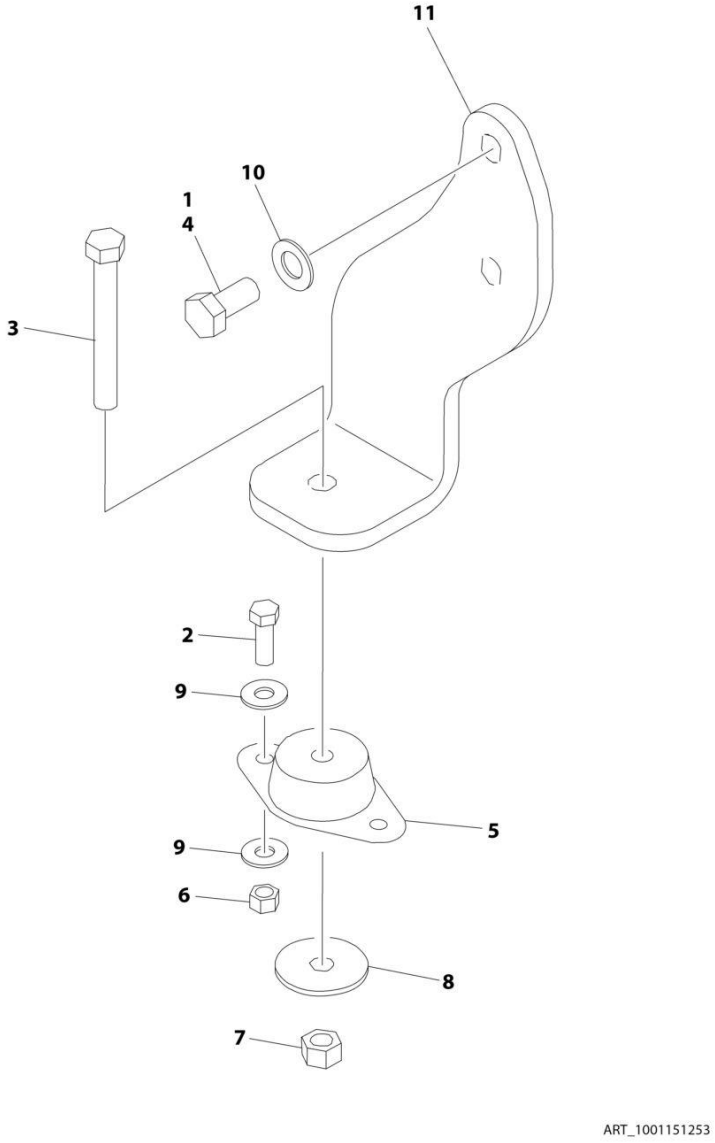

FIGURE 3-46. RIGHT ENGINE SUPPORT INSTALLATION (DEUTZ D2011 ENGINES MACHINES WITHOUT GENERATORS)

ITEM	PART NUMBER	QTY	DESCRIPTION	REV
	1001151253	Ref	RIGHT ENGINE SUPPORT INSTALLATION	A
1	0100011	AR	Compound, Locking	
2	0641609	2	Bolt 3/8 x 1-1/8	
3	0641820	1	Bolt 1/2 x 2-1/2	
4	0711414	2	Bolt M14 x 30 Grade 10.9	
5	3200401	1	Mount, Motor	
6	3311605	2	Nut 3/8	
7	3311805	1	Nut 1/2	
8	4740274	1	Washer	
9	4751600	4	Washer 3/8	
10	4812200	2	Washer M14	
11	1001149703	1	Support, Engine (Right Front)	

FIGURE 3-47. RIGHT ENGINE SUPPORT INSTALLATION (DEUTZ D2011 ENGINES MACHINES WITH GENERATORS)

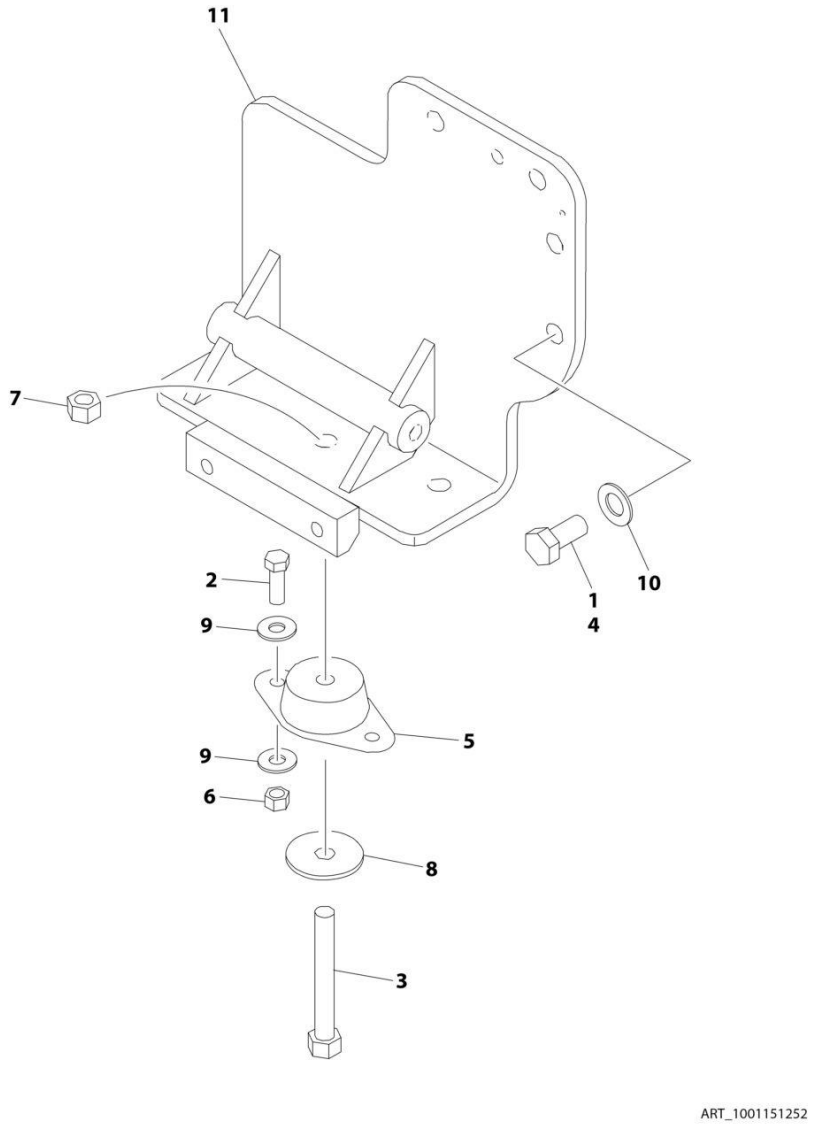

FIGURE 3-47. RIGHT ENGINE SUPPORT INSTALLATION (DEUTZ D2011 ENGINES MACHINES WITH GENERATORS)

ITEM	PART NUMBER	QTY	DESCRIPTION	REV
	1001151252	Ref	RIGHT ENGINE SUPPORT INSTALLATION	B
1	0100011	AR	Compound, Locking	
2	0641609	2	Bolt 3/8 x 1-1/8	
3	0641818	1	Bolt 1/2 x 2-1/2	
4	0711414	3	Bolt M14 x 30 Grade 10.9	
5	3200401	1	Mount, Motor	
6	3311605	2	Nut 3/8	
7	3311805	1	Nut 1/2	
8	4740274	1	Washer	
9	4751600	4	Washer 3/8	
10	4812200	3	Washer M14	
11	1001150890	1	Support, Engine (Right Front)	

FIGURE 3-48. ENGINE HOOD BAFFLE INSTALLATION - DEUTZ TD2.9L4 ENGINES AND DEUTZ TD2.9L4 (STAGE V) ENGINES WITH ABS HOODS

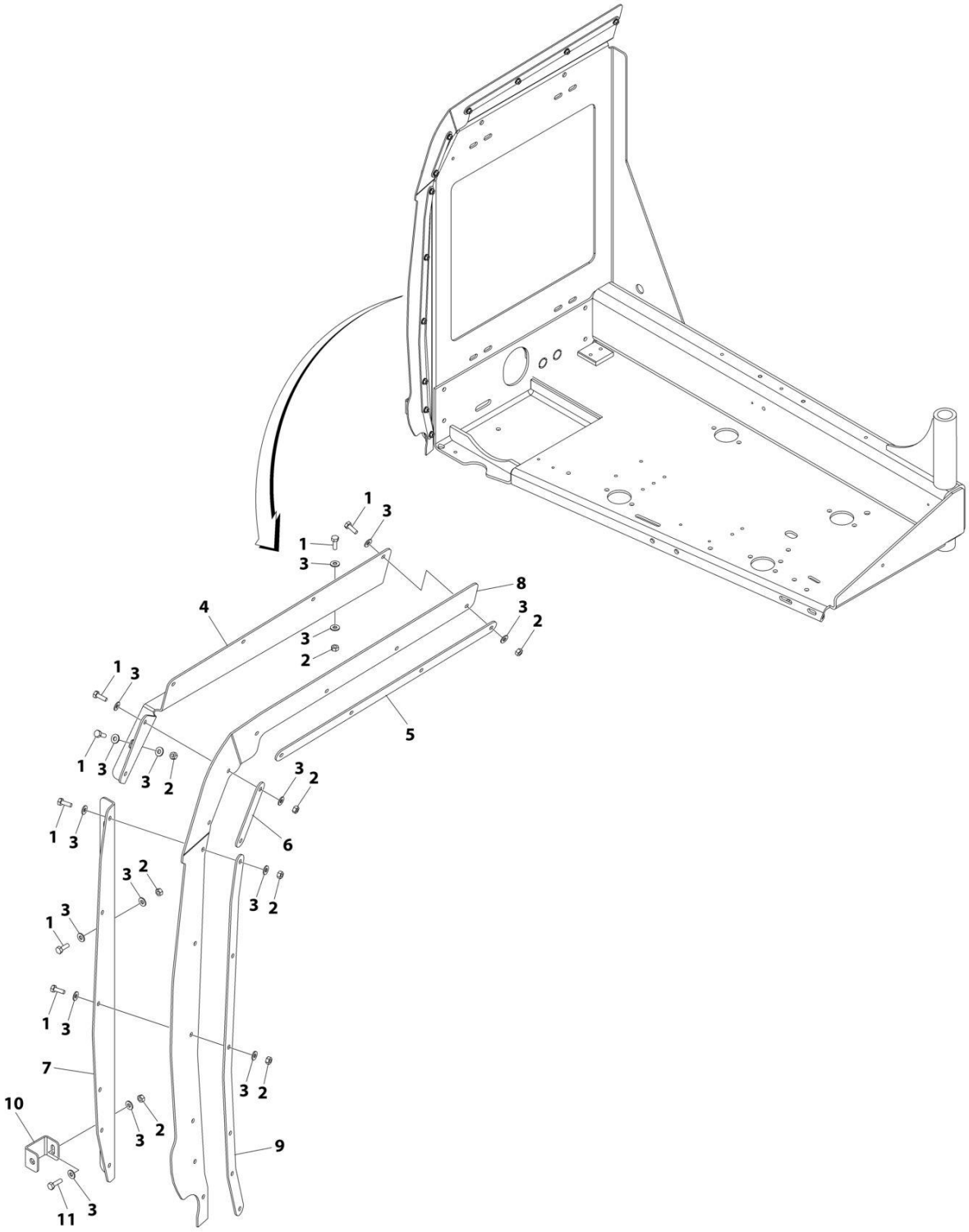

FIGURE 3-48. ENGINE HOOD BAFFLE INSTALLATION - DEUTZ TD2.9L4 ENGINES AND DEUTZ TD2.9L4 (STAGE V) ENGINES WITH ABS HOODS

ITEM	PART NUMBER	QTY	DESCRIPTION	REV
	1001143484	Ref	BAFFLES INSTALLATION (ABS HOODS)	C
1	0641406	18	Bolt 1/4 x 3/4	
2	3311405	19	Nut 1/4	
3	4711400	38	Washer 1/4	
4	1001174745	1	Bracket	
5	1001142031	1	Bracket	
6	1001142032	1	Bracket	
7	1001143449	1	Bracket	
8	1001195967	1	Baffle	
9	1001143525	1	Bracket	
10	1001143860	1	Bracket, Bumper	
11	0641407	1	Bolt 1/4 x 78	

FIGURE 3-49. ENGINE HOOD BAFFLE INSTALLATION - DEUTZ TD2.9L4 ENGINES WITH STEEL HOODS

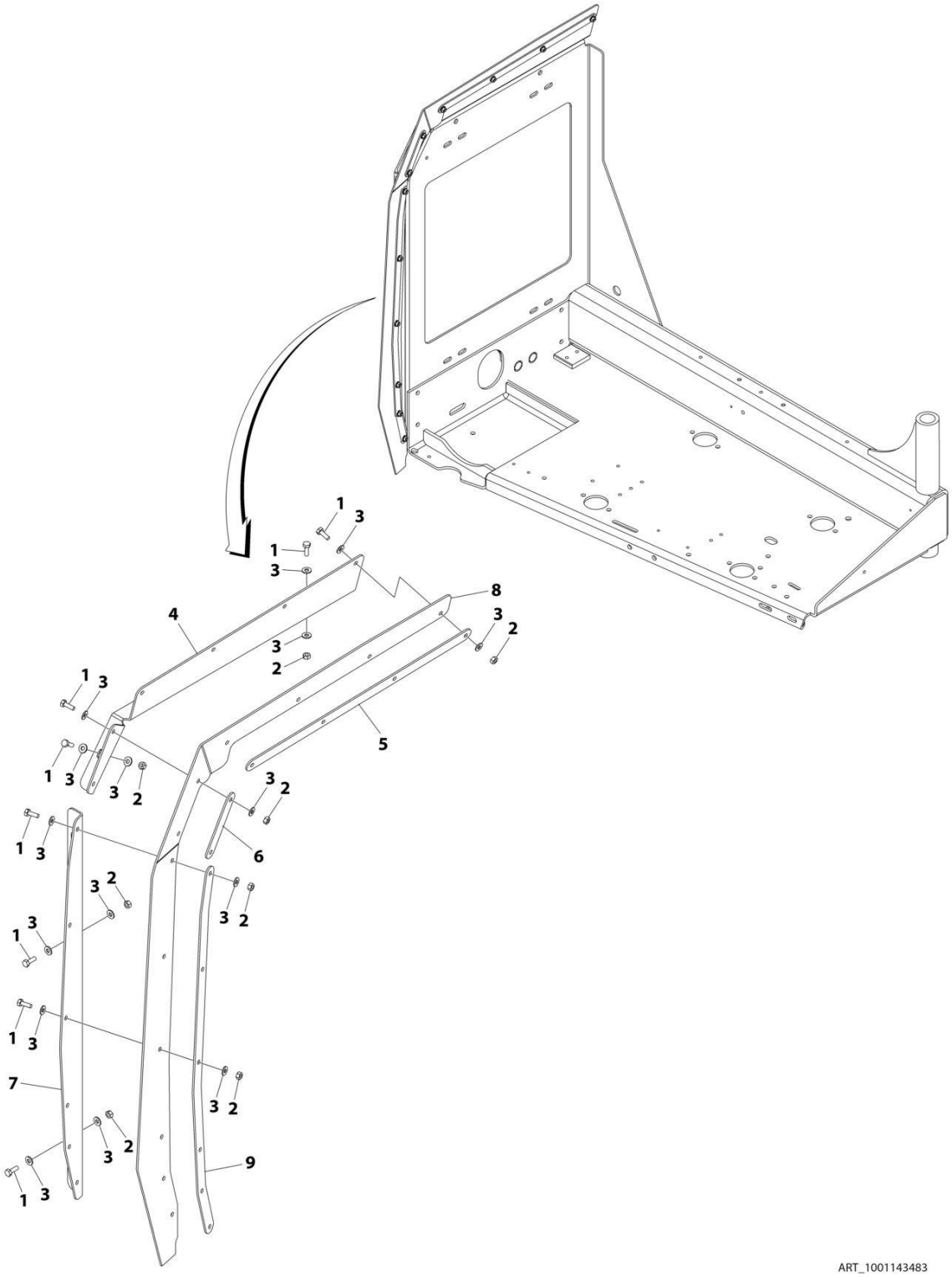

FIGURE 3-49. ENGINE HOOD BAFFLE INSTALLATION - DEUTZ TD2.9L4 ENGINES WITH STEEL HOODS

ITEM	PART NUMBER	QTY	DESCRIPTION	REV
	1001143483	Ref	BAFFLES INSTALLATION (STEEL HOODS)	B
1	0641406	19	Bolt 1/4 x 3/4	
2	3311405	19	Nut 1/4	
3	4711400	38	Washer 1/4	
4	1001174745	1	Bracket	
5	1001142031	1	Bracket	
6	1001142032	1	Bracket	
7	1001143449	1	Bracket	
8	1001174746	1	Baffle	
9	1001143525	1	Bracket	

FIGURE 3-50. ENGINE TRAY JACK INSTALLATION - DEUTZ ENGINES

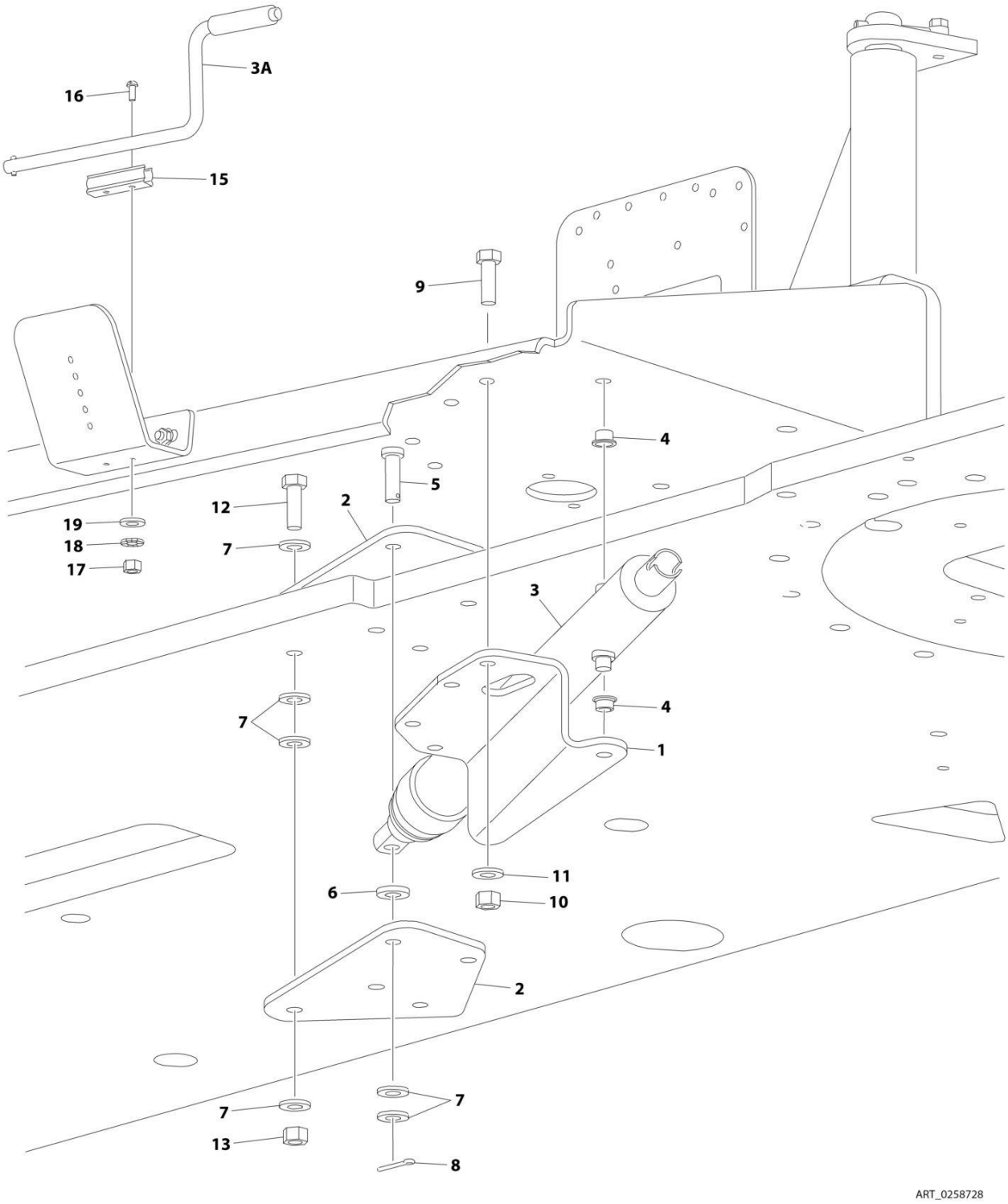

FIGURE 3-50. ENGINE TRAY JACK INSTALLATION - DEUTZ ENGINES

ITEM	PART NUMBER	QTY	DESCRIPTION	REV
	0258728	Ref	ENGINE TRAY JACK INSTALLATION	2-C
1	3537445	1	Bracket	
2	3537446	2	Bracket	
3	2840016	1	Jack and Handle Assembly	F
3A	7024598	1	Handle	
4	0962051	2	Bearing, Flange	
5	3430816	1	Pin, Clevis	
6	4891800	1	Washer 1/2	
7	4711800	6	Washer 1/2	
8	3450404	1	Pin, Cotter 1/8 x 1	
9	0641609	4	Bolt 3/8 x 1-1/8	
10	3311605	4	Nut 3/8	
11	4891600	4	Washer 3/8	
12	0641818	4	Bolt 1/2 x 2-1/4	
13	3311805	4	Nut 1/2	
15	1380147	1	Clip, Spring	
16	3910608	2	Screw #6 x 1	
17	3310601	2	Nut #6	
18	4770600	2	Washer #6	
19	4740119	2	Washer	

FIGURE 3-51. ENGINE TRAY JACK INSTALLATION - FORD ENGINES

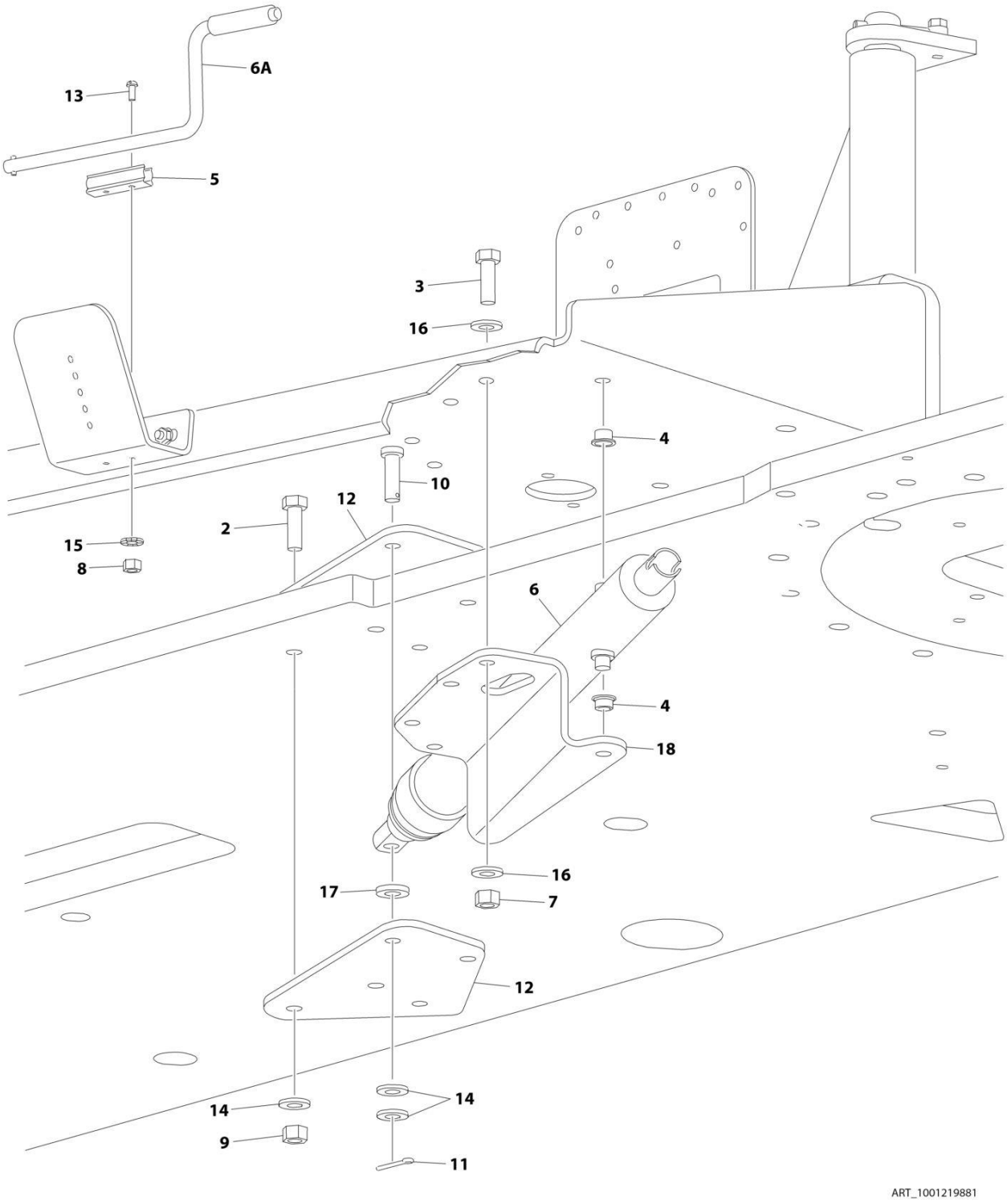

FIGURE 3-51. ENGINE TRAY JACK INSTALLATION - FORD ENGINES

ITEM	PART NUMBER	QTY	DESCRIPTION	REV
	1001219881	Ref	ENGINE TRAY JACK INSTALLATION	B
2	0641818	4	Bolt 1/2 x 2-1/4	
3	0761014	3	Bolt M10 x 30	
4	0962051	2	Bearing, Flange	
5	1380147	1	Clip, Spring	
6	2840016	1	Jack and Handle Assembly	F
6A	7024598	1	Handle	
7	3291007	3	Nut M10	
8	3310601	2	Nut #6-32	
9	3311805	4	Nut 1/2-13	
10	3430816	1	Pin, Clevis	
11	3450404	1	Pin, Cotter 1/8 x 1	
12	3537446	2	Bracket	
13	3910608	2	Screw #6-32 x 1	
14	4711800	6	Washer 1/2	
15	4770600	2	Washer #6	
16	4812000	6	Washer M10	
17	4891800	1	Washer 1/2	
18	1001218547	1	Bracket	

FIGURE 3-52. 2500W/110V/60HZ GENERATOR INSTALLATION - DEUTZ D2011 ENGINES

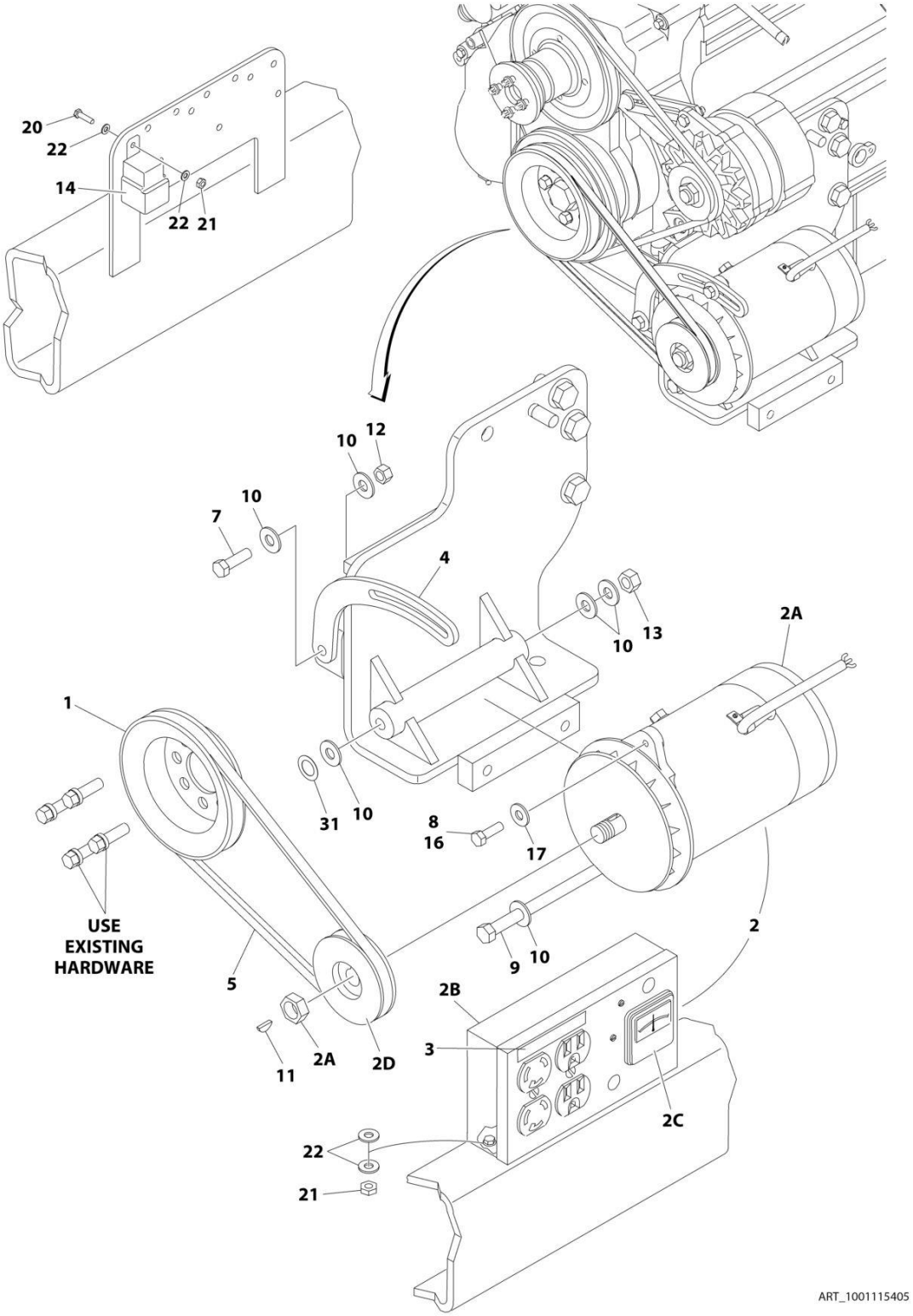

FIGURE 3-52. 2500W/110V/60HZ GENERATOR INSTALLATION - DEUTZ D2011 ENGINES

ITEM	PART NUMBER	QTY	DESCRIPTION	REV
	1001115405	Ref	2500W GENERATOR INSTALLATION - 110V/60Hz	B
1	3580158	1	Pulley	
2	2460055	1	Generator and Control Box Assembly:	
2A	7012558	1	Generator Only - 110V/60Hz	
2A		Ref	Note: Replacement Generators come standard with p/n 3580134 pulley. This pulley may not be correct for all applications. Refer to pulley options below.	
2A	7026199	1	Armature with Slip Rings	
2A	7012513	4	Cap, Brush Holder	
2A	7020108	4	Brush	
2A	7020109	4	Holder, Brush	
2A	7012514	1	Fan	
2A	7020110	1	Bell, Front	
2A	7020111	1	Bell, Rear	
2A	7020190	1	Bearing	
2B	7019680	1	Box, Control	
2B		Ref	Receptacle Options:	
2B	4460190	1	Receptacle, Standard	
2B	4460027	1	Receptacle, Twistlock	
2B	4360542	1	Breaker, Circuit	
2B	3520028	1	Plug, Hole	
2C	2420203	1	Voltmeter	
2D	3580276	1	Pulley	
2D	7027887	1	Key, Woodruff	
3	3251243	1	Decal - 110V/60Hz	
4	0200742	1	Arm, Adjusting	
5	0480121	1	V-Belt	
7	0641610	1	Bolt 3/8 x 1-1/4	
8	0100011	AR	Compound, Locking	
9	0641772	1	Bolt 7/16 x 9	
10	4751600	6	Washer 3/8	
11	2860012	1	Key, Woodruff	
12	3311605	1	Nut 3/8	
13	3311705	1	Nut 7/16	
14	3740080	1	Relay	
16	0641508	1	Bolt 5/16 x 1	
17	4751500	AR	Washer 5/16	
18	1001112588	1	Wiring Diagram Components (Not Shown)	
18	1001112589	1	Generator Harness (Not Shown)	
18	4922641	1	Generator ON/OFF Switch Harness (Not Shown - Located at Platform)	
20	0721006	AR	Bolt #10 x 3/4	
21	3311005	3	Nut #10	
22	4751000	AR	Washer #10	
25	4360336	1	Switch, Toggle (Not Shown - Located at Platform)	
26	4740397	1	Bushing (Not Shown - Located at Platform)	
27	4060802	1	Guard, Switch (Not Shown - Located at Platform)	
29	2820031	4 in/ 10cm	Heat Shrink (Not Shown - Located at Platform)	
30	3251102	1	Decal (Not Shown - Located at Platform)	
31	4070585	AR	Shim	

FIGURE 3-53. 2500W/110V/60HZ GENERATOR INSTALLATION - DEUTZ TD2.9L4 ENGINES

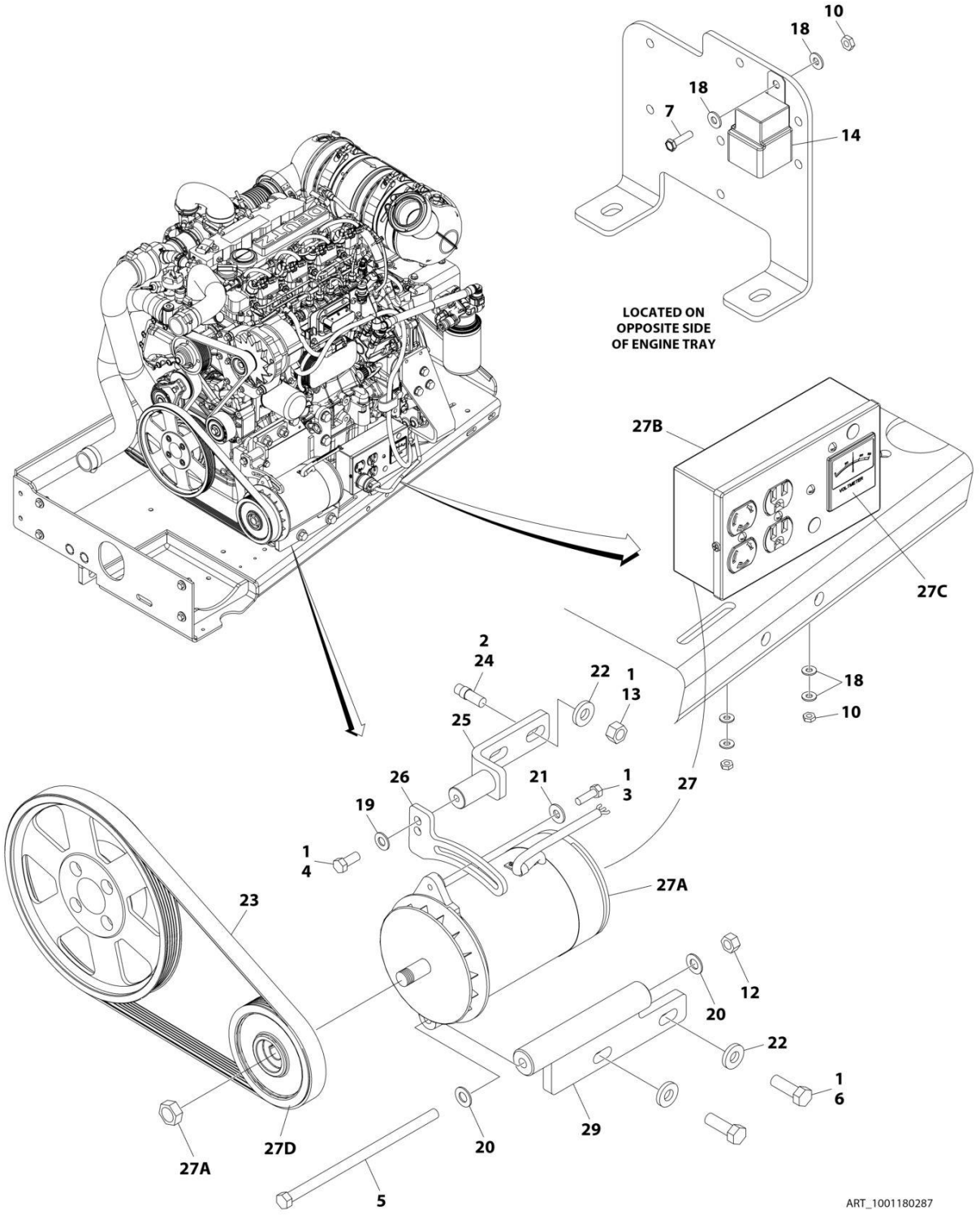

FIGURE 3-53. 2500W/110V/60HZ GENERATOR INSTALLATION - DEUTZ TD2.9L4 ENGINES

ITEM	PART NUMBER	QTY	DESCRIPTION	REV
	1001180287	Ref	2500W GENERATOR INSTALLATION - DEUTZ TD2.9L4 (OPTIONAL)	C
1	0100011	AR	Compound, Locking	
2	0100019	AR	Compound, Locking	
3	0641508	1	Bolt 5/16 x 1	
4	0641607	1	Bolt 3/8 x 7/8	
5	0641772	1	Bolt 7/16 x 9	
6	0641812	2	Bolt 1/2 x 1-1/2	
7	0721006	1	Screw #10 x 3/4	
8	2820031	AR	Heat Shrink (Not Shown - Located at Platform)	
9	3251102	1	Name Plate - Generator On (Not Shown - Located at Platform)	
10	3311005	3	Nut #10	
12	3311705	1	Nut 7/16	
13	3311801	2	Nut 1/2	
14	3740080	1	Relay	
15	4060802	1	Guard, Switch (Not Shown - Located at Platform)	
16	4240018	AR	Strap, Cable Tie (Not Shown)	
17	4360336	1	Switch, Toggle (Not Shown - Located at Platform)	
18	4711000	6	Washer #10	
19	4711600	1	Washer 3/8	
20	4711700	2	Washer 7/16	
21	4751500	1	Washer 5/16	
22	4891800	4	Washer 1/2	
23	1001148138	1	V-Belt	
24	1001163599	2	Stud	
25	1001216015	1	Bracket	
26	1001179837	1	Arm, Adjustment	
27	1001180001	1	Generator and Control Box Assembly	
27A	7012558	1	Generator Only - 110V/60Hz	
27A		Ref	Note: Replacement Generators come standard with p/n 3580134 pulley. This pulley may not be correct for all applications. Refer to pulley options below.	
27A	7026199	1	Armature with Slip Rings	
27A	7012513	4	Cap, Brush Holder	
27A	7020108	4	Brush	
27A	7020109	4	Holder, Brush	
27A	7012514	1	Fan	
27A	7020110	1	Bell, Front	
27A	7020111	1	Bell, Rear	
27A	7020190	2	Bearing	
27B	7019680	1	Box, Control - 110V/60Hz	
27B		Ref	Receptacle Options:	
27B	4460190	1	Receptacle, Standard (110V Only)	
27B	4460027	1	Receptacle, Twistlock (110V Only)	
27B	4360542	1	Breaker, Circuit	
27B	3520028	1	Plug, Hole	
27C	2420203	1	Voltmeter	
27D	3580276	1	Pulley	
27D	7027887	1	Key, Woodruff	
28		Ref	Wiring Diagram Components (Not Shown)	

ITEM	PART NUMBER	QTY	DESCRIPTION	REV
28	4922641	1	Generator On/Off Switch Harness (Not Shown - Located at Platform)	
28	1001180052	1	Generator Harness (Not Shown)	
29	1001181243	1	Mount, Generator	

FIGURE 3-54. 2500W/110V/60HZ GENERATOR INSTALLATION - FORD ENGINES

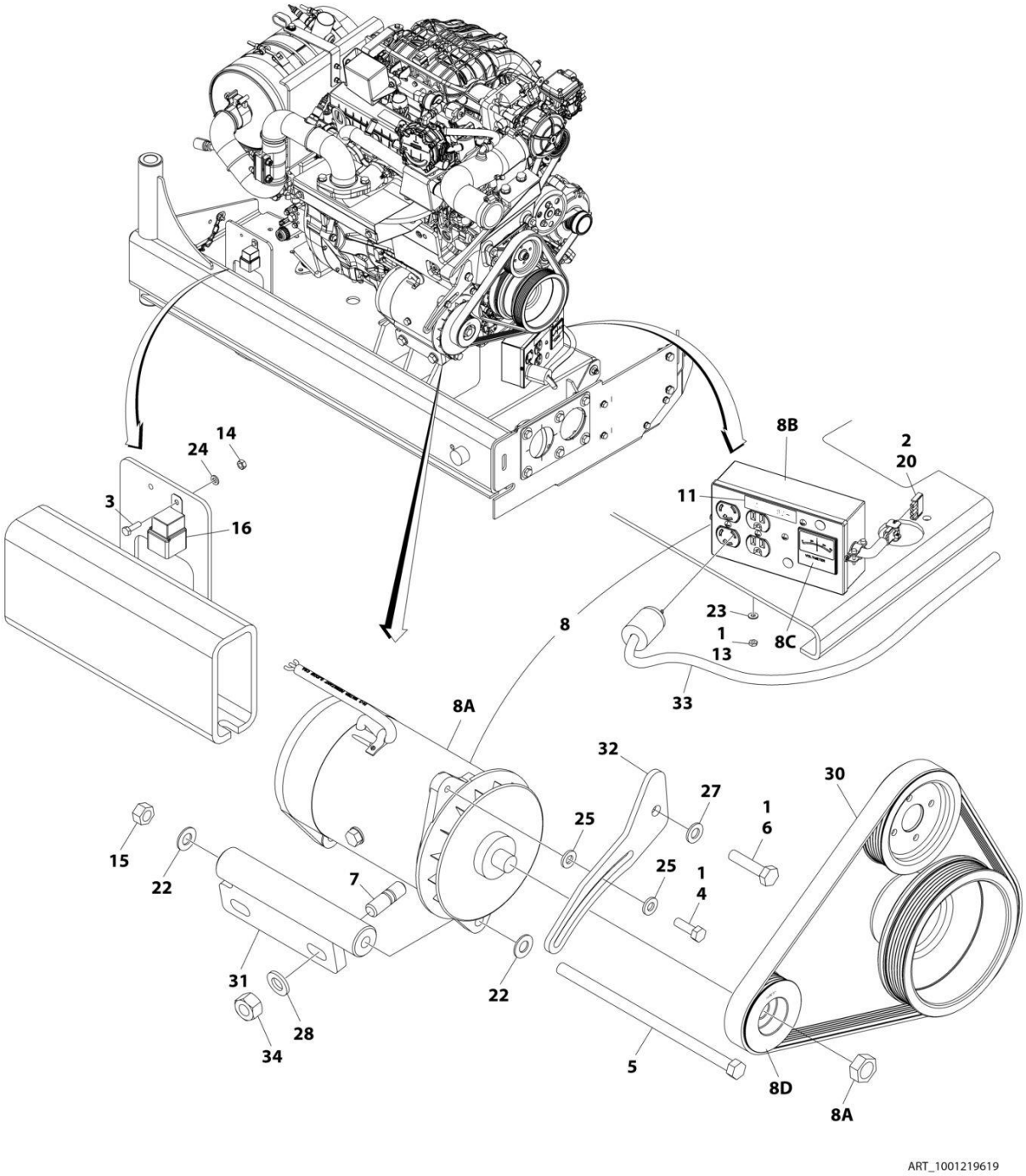

FIGURE 3-54. 2500W/110V/60HZ GENERATOR INSTALLATION - FORD ENGINES

ITEM	PART NUMBER	QTY	DESCRIPTION	REV
	1001219619	Ref	2500W GENERATOR INSTALLATION - FORD MACHINES (OPTIONAL)	E
1	0100011	AR	Compound, Locking	
2	0100048	AR	Grease, Dielectric	
3	0760610	1	Bolt M6 x 20	
4	0641508	1	Bolt 5/16 x 1	
5	0641772	1	Bolt 7/16 x 9	
6	0761016	1	Bolt M10 x 40	
7	1001155041	1	Stud	
8	2460051	1	Generator and Control Box Assembly	
8A	7012558	1	Generator Only - 110V/60Hz	
		Ref	Note: Replacement Generators come standard with pin 3580134 pulley. This pulley may not be correct for all applications. Refer to pulley options below.	
8A	7026199	1	Armature with Slip Rings	
8A	7012513	4	Cap, Brush Holder	
8A	7020108	4	Brush	
8A	7020109	4	Holder, Brush	
8A	7012514	1	Fan	
8A	7020110	1	Bell, Front	
8A	7020111	1	Bell, Rear	
8A	7020190	2	Bearing	
8B	7019680	1	Box, Control - 110V/60Hz	
8B		Ref	Receptacle Options:	
8B	4460190	1	Receptacle, Standard (110V Only)	
8B	4460027	1	Receptacle, Twistlock (110V Only)	
8B	4360542	1	Breaker, Circuit	
8B	3520028	1	Plug, Hole	
8C	2420203	1	Voltmeter	
8D	3580324	1	Pulley	
8D	7027887	1	Key, Woodruff	
9	2820031	1	Heat Shrink (Not Shown - Located at Platform)	
10	3251102	1	Nameplate Generator (Not Shown - Located at Platform)	
11	3251243	1	Decal - 120V-60Hz	
13	3311005	2	Nut #10	
14	3290601	1	Nut M6	
15	3311705	1	Nut 7/16	
16	3740080	1	Relay	
17	4060802	1	Guard Switch (Not Shown - Located at Platform)	
18	4240099	AR	Tie-Strap (Not Shown)	
19	4360336	1	Switch, Toggle (Not Shown - Located at Platform)	
20	4460321	1	Plug, Male - 4 Position	
22	4711700	2	Washer 7/16	
23	4751000	2	Washer #10	
24	4811700	1	Washer M6	
25	4891500	2	Washer 5/16	
27	4812000	1	Washer M10	
28	4812200	2	Washer M14	
29		Ref	Wiring Diagram Components (Not Shown)	
29	4922641	1	Generator On/Off Switch Harness (Not Shown - Located at	

ITEM	PART NUMBER	QTY	DESCRIPTION	REV
			Platform)	
29	4923445	1	Generator Harness (Not Shown - See Separate Breakdown in ELECTRICAL SECTION)	
30	1001216391	1	V-Belt	
31	1001219630	1	Mount, Generator	
32	1001219632	1	Arm, Adjustment	
33	4921829	1	Harness, Inverter	
34	3291201	2	Nut M12	

FIGURE 3-55. 2500W/220V/50HZ GENERATOR INSTALLATION - DEUTZ D2011 ENGINES

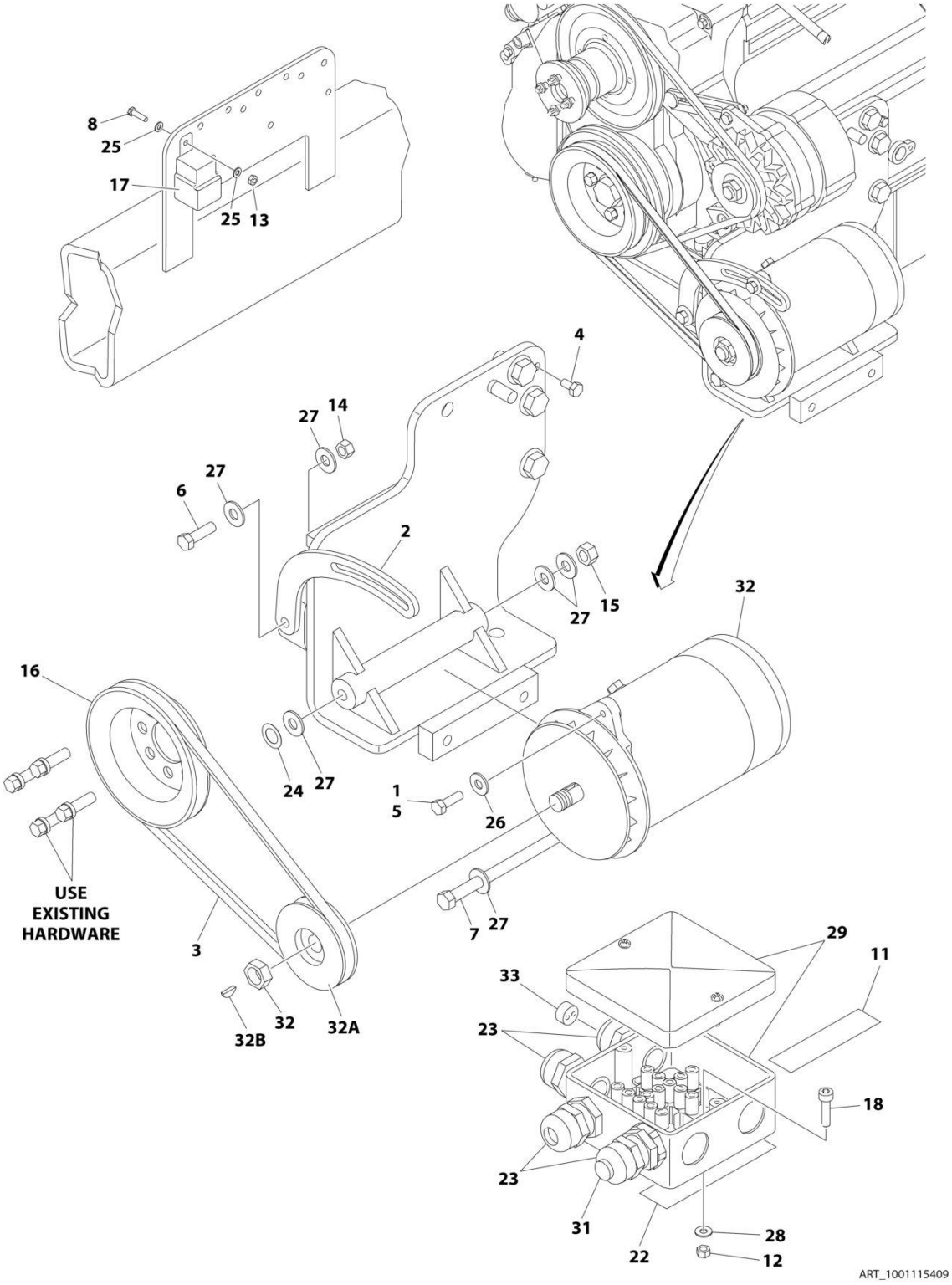

FIGURE 3-55. 2500W/220V/50HZ GENERATOR INSTALLATION - DEUTZ D2011 ENGINES

ITEM	PART NUMBER	QTY	DESCRIPTION	REV
	1001115409	Ref	2500W GENERATOR INSTALLATION - 220V/50Hz	B
1	0100011	AR	Compound, Locking	
2	0200742	1	Arm, Adjusting	
3	0480121	1	V-Belt	
4	0641404	1	Bolt 1/4 x 1/2	
5	0641508	1	Bolt 5/16 x 1	
6	0641610	1	Bolt 3/8 x 1-1/4	
7	0641772	1	Bolt 7/16 x 9	
8	0721006	AR	Bolt #10 x 3/4	
9	2820031	4 in/10cm	Heat Shrink (Not Shown - Located at Platform)	
10	3251102	1	Decal (Not Shown - Located at Platform)	
11	3252507	2	Decal - 220V - 50Hz	
		Ref	Note: One Decal Not Shown - Located on the Inside of Platform Rail.	
12	3290505	1	Nut M5	
13	3311005	1	Nut #10	
14	3311605	1	Nut 3/8	
15	3311705	1	Nut 7/16	
16	3580158	1	Pulley	
17	3740080	1	Relay	
18	4031608	1	Bolt M5 x 20	
19	4060802	1	Guard, Switch (Not Shown - Located at Platform)	
20	4240018	1	Tie Strap (Not Shown)	
21	4360336	1	Switch, Toggle (Not Shown - Located at Platform)	
22	4420060	AR	Tape, Double Coated Acrylic Foam	
23	4460968	3	Connector, Strain Relief	
24	4740397	1	Shim	
25	4751000	2	Washer #10	
26	4751500	1	Washer 5/16	
27	4751600	6	Washer 3/8	
28	4811600	1	Washer M5	
29	1001099869	1	Box, Junction	
30		Ref	Wiring Diagram Components (Not Shown)	
30	4922641	1	Generator On/Off Switch Harness (Not Shown - Located at Platform)	
30	1001112589	1	Generator Harness (Not Shown)	
31	1001100234	1	Light, Red	
32	1001100321	1	Generator	
32	70000123	1	Armature with Slip Rings	
32	7012513	4	Cap, Brush Holder	
32	7020108	4	Brush	
32	7020109	4	Holder, Brush	
32	7012514	1	Fan	
32	7020110	1	Bell, Front	
32	7020111	1	Bell, Rear	
32	7020190	1	Bearing	
32A	3580134	1	Pulley - 50Hz	
32B	7027887	1	Key, Woodruff	
33	0962449	1	Bushing	

FIGURE 3-56. 4000W/50HZ GENERATOR INSTALLATION - DEUTZ D2011 ENGINES

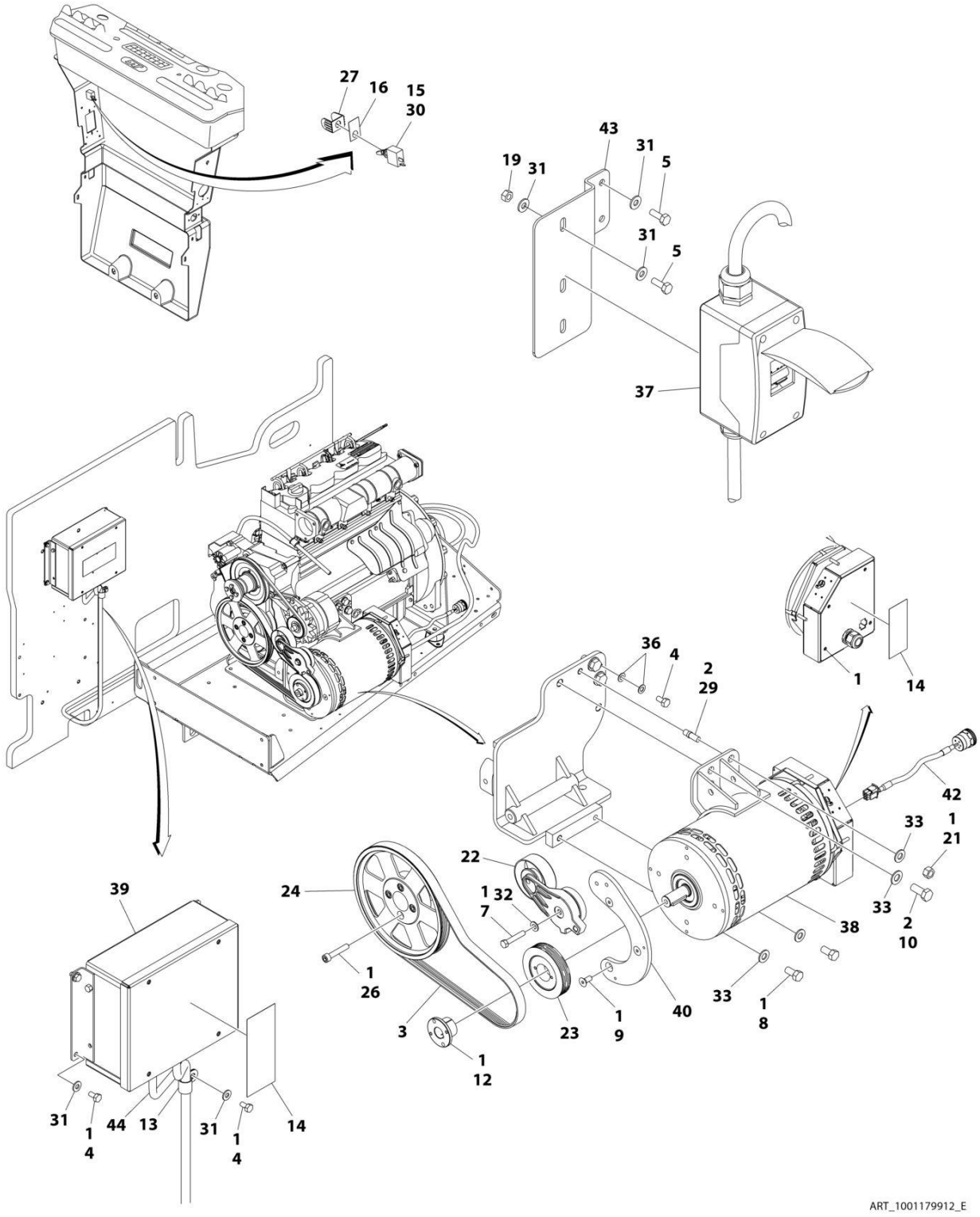

FIGURE 3-56. 4000W/50HZ GENERATOR INSTALLATION - DEUTZ D2011 ENGINES

ITEM	PART NUMBER	QTY	DESCRIPTION	REV
	1001179912	Ref	4000W/50Hz GENERATOR INSTALLATION - DEUTZ D2011 ENGINES	E
1	0100011	AR	Compound, Locking	
2	0100019	AR	Compound, Locking	
3	0480126	1	Belt, Generator (50Hz)	
4	0641404	6	Bolt 1/4 x 1/2	
5	0641406	1	Bolt 1/4 x 3/4	
7	0641616	1	Bolt 3/8 x 2	
8	0641808	2	Bolt 1/2 x 1	
9	0741607	3	Screw 3/8 x 7/8	
10	0771415	1	Bolt M14 x 35	
12	0962520	1	Bushing, Split	
13	1320318	1	Clamp	
14	1705489	1	Decal - Hazardous Voltage	
15	2820031	0.33 ft /0.1m	Heat Shrink	
16	3251102	1	Nameplate - Generator	
19	3311405	1	Nut 1/4	
21	3311801	1	Nut 1/2	
22	3580317	1	Tensioner, Belt with Pulley	
23	3580319	1	Pulley, Generator	
24	3580320	1	Pulley, Engine	
26	4032015	4	Capscrew M10 x 55	
27	4060802	1	Guard, Switch	
28	4240018	AR	Tie-Strap (Not Shown)	
29	4300157	1	Stud	
30	4360336	1	Switch, Toggle	
31	4711400	11	Washer 1/4	
32	4711600	1	Washer 3/8	
33	4711800	3	Washer 1/2	
36	4791400	2	Washer 1/4	
37	1001165368	1	Breaker Box Kit (Not Shown - See Separate Breakdown in ELECTRICAL SECTION)	
38	1001138565	1	Generator Assembly (50Hz)	
38	70003709	1	Ring, Retaining (External)	
38	70003708	1	Ring, Retaining (Internal)	
38	70001966	1	Bearing	
38	70004092	1	Endbell (Shaft End)	
38	70004171	1	Key	
38	70004676	1	Rotor	
38	70004677	1	Stator (50Hz)	
38	70004678	1	Endbell (Rear)	
38	70004679	1	Cover, Endbell (Rear)	
38	70004680	1	Enclosure, Wiring	
38	70004681	1	Cover, Enclosure (50Hz)	
38	70004682	1	Switch, Reset (Located on Enclosure Cover)	
38	70004683	1	Connector, Strain Relief (50Hz) (Located on Enclosure Cover)	
39	1001138566	1	Control Box Assembly	
39	70006552	1	Capacitor	
39	70006553	1	Relay	

ITEM	PART NUMBER	QTY	DESCRIPTION	REV
40	1001139357	1	Mount, Tensioner	
42	1001152532	1	Generator to Control Box, Harness (See Separate Breakdown in ELECTRICAL SECTION)	
43	1001177035	1	Bracket	
44	1001153197	1	Generator Control Box to Engine Harness (See Separate Breakdown in ELECTRICAL SECTION)	

FIGURE 3-57. 4000W/50HZ GENERATOR INSTALLATION - DEUTZ TD2.9L4 ENGINES AND DEUTZ TD2.9L4 (STAGE V) ENGINES

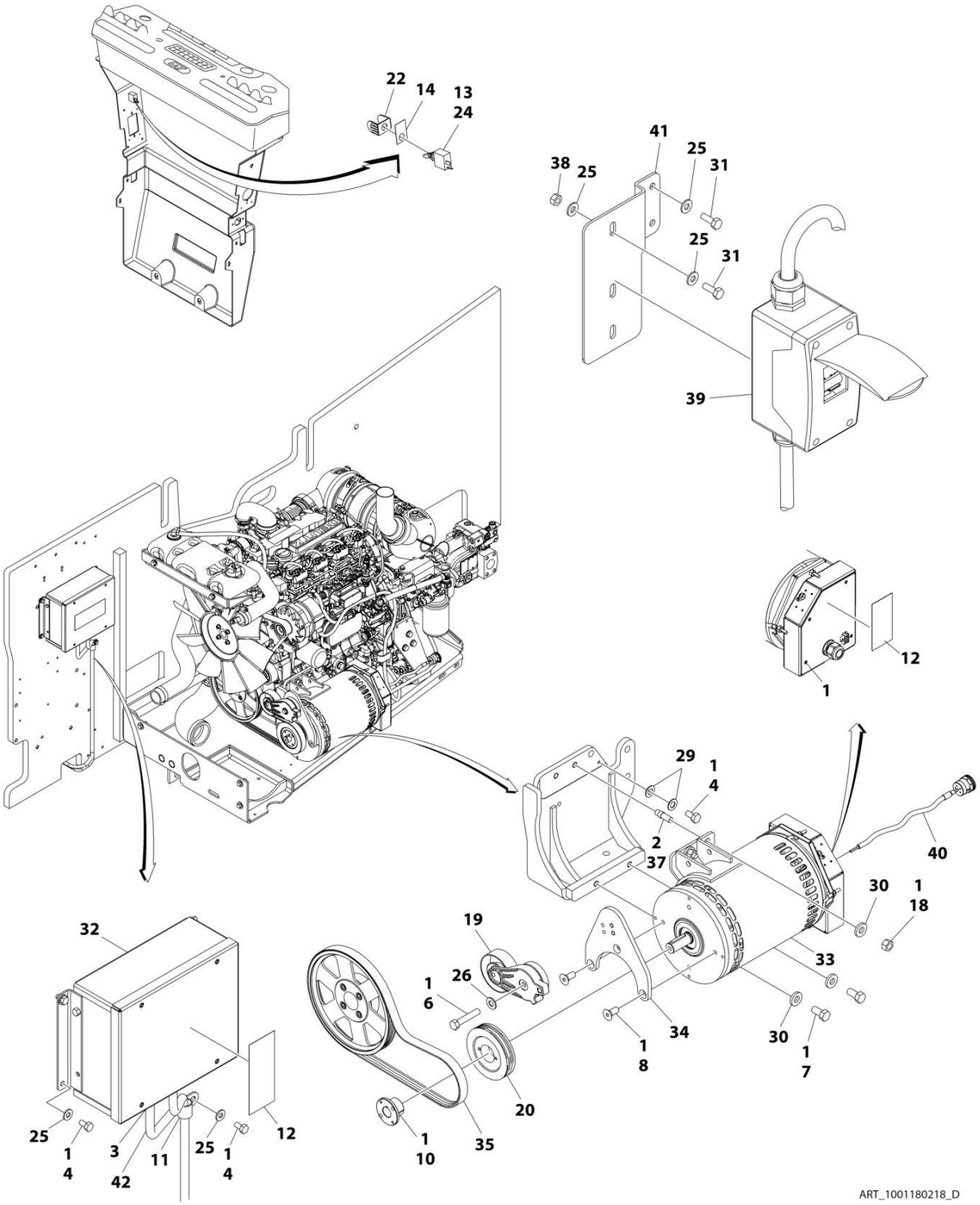

FIGURE 3-57. 4000W/50HZ GENERATOR INSTALLATION - DEUTZ TD2.9L4 ENGINES AND DEUTZ TD2.9L4 (STAGE V) ENGINES

ITEM	PART NUMBER	QTY	DESCRIPTION	REV
	1001180218	1	4000W/Hz GENERATOR INSTALLATION - DEUTZ TD2.9L4 ENGINES	D
1	0100011	AR	Compound, Locking	
2	0100019	AR	Compound, Locking	
3	0100048	AR	Grease Dielectric	
4	0641404	6	Bolt 1/4 x 1/2	
6	0641616	1	Bolt 3/8 x 2	
7	0641808	2	Bolt 1/2 x 1	
8	0741607	3	Screw 3/8 x 7/8	
10	0962520	1	Bushing, Split	
11	1320318	1	Clamp	
12	1705489	2	Decal - Hazardous Voltage	
13	2820031	0.33 ft /0.1m	Heat Shrink	
14	3251102	1	Nameplate, Generator	
18	3311801	2	Nut 1/2	
19	3580317	1	Tensioner, Belt with Pulley	
20	3580319	1	Pulley, Generator	
22	4060802	1	Guard, Switch	
23	4240018	AR	Tie-Strap (Not Shown)	
24	4360336	1	Switch, Toggle	
25	4711400	11	Washer 1/4	
26	4711600	1	Washer 3/8	
29	4791400	2	Washer 1/4	
30	4891800	4	Washer 1/2	
31	0641406	4	Bolt 1/4 x 3/4	
32	1001138566	1	Control Box Assembly	
32	70006552	1	Capacitor	
32	70006553	1	Relay	
33	1001140347	1	Generator Assembly	
33	70003709	1	Ring, Retaining (External)	
33	70003708	1	Ring, Retaining (Internal)	
33	70001966	1	Bearing	
33	70004092	1	Endbell (Shaft End)	
33	70004099	1	Key	
33	70004676	1	Rotor	
33	70004686	1	Stator	
33	70004678	1	Endbell (Rear)	
33	70004679	1	Cover, Endbell (Rear)	
33	70004680	1	Enclosure, Wiring	
33	70004681	1	Cover, Enclosure	
33	70004682	1	Switch, Reset (Located on Enclosure Cover)	
33	70004683	1	Connector, Strain Relief (Located on Enclosure Cover)	
33	4460224	1	Connector - 6 Position (Located on Enclosure Cover)	
33	4460294	2	Pin, Male (Located on Enclosure Cover)	
34	1001142643	1	Support, Tensioner	
35	1001142645	1	Belt, Generator	
37	1001163599	2	Stud	
38	3311405	4	Nut 1/4	

ITEM	PART NUMBER	QTY	DESCRIPTION	REV
39	1001165368	1	Breaker Box Kit (Not Shown - See Separate Breakdown in ELECTRICAL SECTION)	
40	1001152532	1	Genarator to Control Box Harness (See Separate Breakdown in ELECTRICAL SECTION)	
41	1001177035	1	Bracket	
42	1001153259	1	Generator Control Box to Engine Harness (See Separate Breakdown in ELECTRICAL SECTION)	

FIGURE 3-58. 4000W/60HZ GENERATOR INSTALLATION - DEUTZ D2011 ENGINES

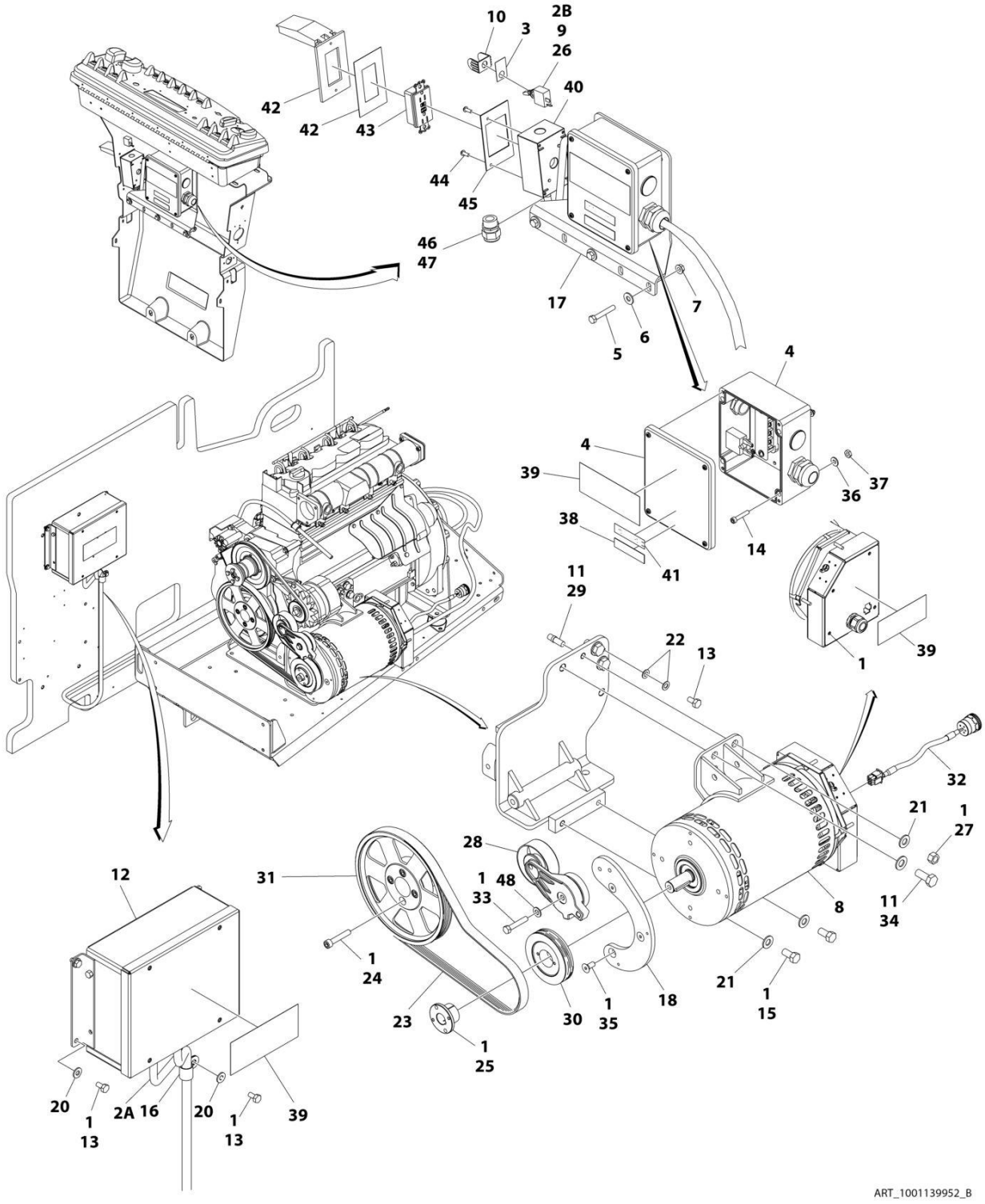

FIGURE 3-58. 4000W/60HZ GENERATOR INSTALLATION - DEUTZ D2011 ENGINES

ITEM	PART NUMBER	QTY	DESCRIPTION	REV
	1001139952	Ref	4000W/60Hz GENERATOR INSTALLATION - DEUTZ D2011 ENGINES	B
1	0100011	AR	Compound, Locking	
2		Ref	Wiring Diagram Components (Not Shown)	
2A	1001153197	1	Generator Control Box to Engine Harness (See Separate Breakdown in ELECTRICAL SECTION)	
2B	4462641	1	Generator On/Off Switch Harness	
3	3251102	1	Nameplate - Generator	
4	1001152457	1	Junction Box Assembly	
4	3300396	1	Cover, Breaker	
4	4360070	1	Breaker, Circuit - 15Amp	
4	4460425	1	Connector, Strain Relief (LH Side)	
4	4460426	1	Connector, Strain Relief (RH Side)	
5	0641516	3	Bolt 5/16 x 2	
6	4751500	3	Washer 5/16	
7	3311508	3	Nut 5/16	
8	1001129858	1	Generator Assembly	
8	70003709	1	Ring, Retaining (External)	
8	70003708	1	Ring, Retaining (Internal)	
8	70001966	1	Bearing	
8	70004092	1	Endbell (Shaft End)	
8	70004171	1	Key	
8	70004676	1	Rotor	
8	70004684	1	Stator	
8	70004678	1	Endbell (Rear)	
8	70004679	1	Cover, Endbell (Rear)	
8	70004680	1	Enclosure, Wiring	
8	70004685	1	Cover, Enclosure	
8	70004682	1	Switch, Reset (Located on Enclosure Cover)	
8	70004098	1	Connector, Strain Relief (Located on Enclosure Cover)	
9	4360336	1	Switch, Toggle	
10	4060802	1	Guard, Switch	
11	0100019	AR	Compound, Locking	
12	1001138566	1	Control Box Assembly	
12	70006552	1	Capacitor	
12	70006553	1	Relay	
13	0641404	6	Bolt 1/4 x 1/2	
14	3931016	4	Capscrew #10 x 1	
15	0641808	2	Bolt 1/2 x 1	
16	1320318	1	Clamp	
17	0902888	1	Bracket	
18	1001139357	1	Mount, Tensioner	
19	4240018	AR	Tie-Strap (Not Shown)	
20	4711400	5	Washer 1/4	
21	4711800	3	Washer 1/2	
22	4791400	2	Washer 1/4	
23	0480129	1	Belt, Generator	
24	4032015	4	Capscrew M10 x 55	
25	0962520	1	Bushing, Split	
26	2820031	0.33 ft	Heat Shrink	

ITEM	PART NUMBER	QTY	DESCRIPTION	REV
		/0.1m		
27	3311801	1	Nut 1/2	
28	3580317	1	Tensioner, Belt with Pulley	
29	4300157	1	Stud	
30	3580318	1	Pulley, Generator	
31	3580320	1	Pulley, Engine	
32	1001152532	1	Generator to Control Box Harness (See Separate Breakdown in ELECTRICAL SECTION)	
33	0641616	1	Bolt 3/8 x 2	
34	0771415	1	Bolt M14 x 35	
35	0741607	3	Screw 3/8 x 7/8	
36	4751000	4	Washer #10	
37	3311005	4	Nut #10	
38	1705374	1	Decal - 240V	
39	1705387	3	Decal - Hazardous Voltage	
40	0860038	1	Box, Switch - Weatherhead	
41	3251243	1	Decal - 120V	
42	1001110873	1	Cover, Receptacle	
43	4460346	1	Receptacle	
44	3910606	4	Screw #6 x 3/8	
45	3960422	1	Gasket	
46	0100020	AR	Sealant #567	
47	4460071	1	Connector	
48	4711600	1	Washer 3/8	

FIGURE 3-59. 4000W/60HZ GENERATOR INSTALLATION - DEUTZ TD2.9L4 ENGINES

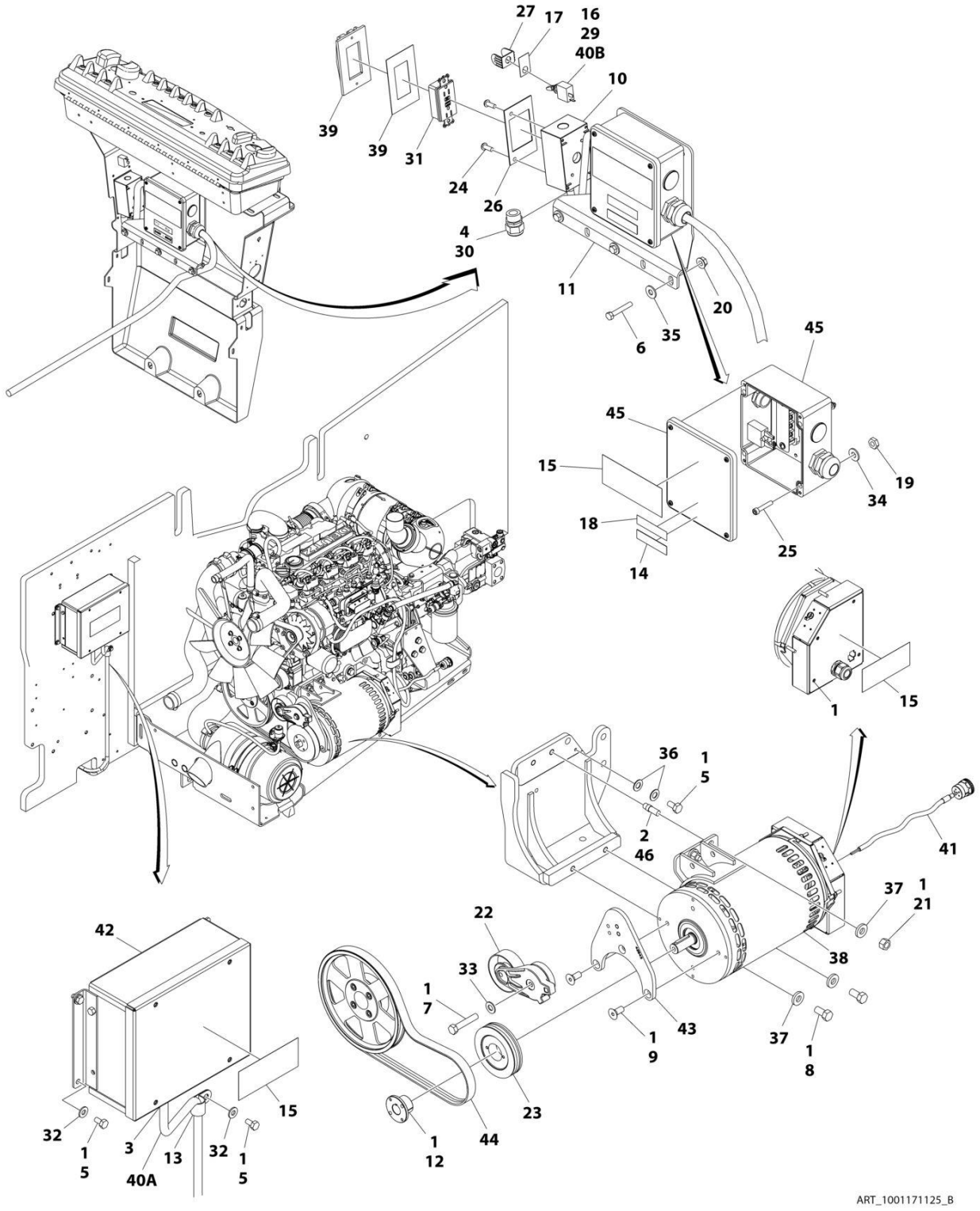

FIGURE 3-59. 4000W/60HZ GENERATOR INSTALLATION - DEUTZ TD2.9L4 ENGINES

ITEM	PART NUMBER	QTY	DESCRIPTION	REV
	1001171125	1	4000W/60hHz GENERATOR INSTALLATION	B
1	0100011	AR	Compound, Locking	
2	0100019	AR	Compound, Locking	
3	0100048	AR	Grease Dielectric	
4	0100079	AR	Sealant	
5	0641404	6	Bolt 1/4 x 1/2	
6	0641516	3	Bolt 5/16 x 2	
7	0641616	1	Bolt 3/8 x 2	
8	0641808	2	Bolt 1/2 x 1	
9	0741607	3	Screw 3/8 x 7/8	
10	0860038	1	Box, Switch	
11	0902888	1	Bracket, Junction Box	
12	0962520	1	Bushing, Split	
13	1320318	1	Clamp	
14	1705374	1	Decal - 240V	
15	1705387	3	Decal - Hazardous Voltage	
16	2820031	0.33 ft /0.1m	Heat Shrink	
17	3251102	1	Nameplate, Generator	
18	3251243	1	Decal - 120V	
19	3311005	4	Nut #10	
20	3311508	3	Nut 5/16	
21	3311801	2	Nut 1/2	
22	3580317	1	Tensioner, Belt with Pulley	
23	3580318	1	Pulley, Generator	
24	3910606	4	Screw 6 x 3/8	
25	3931016	4	Capscrew #10 x 1	
26	3960422	1	Gasket, AC Receptacle	
27	4060802	1	Guard, Switch	
28	4240018	AR	Tie-Strap (Not Shown)	
29	4360336	1	Switch, Toggle	
30	4460071	1	Connector, Strain Relief	
31	4460346	1	Receptacle	
32	4711400	5	Washer 1/4	
33	4711600	1	Washer 3/8	
34	4751000	4	Washer #10	
35	4751500	3	Washer 5/16	
36	4791400	2	Washer 1/4	
37	4891800	4	Washer 1/2	
38	1001140346	1	Generator Assembly	
38	70003709	1	Ring, Retaining (External)	
38	70003708	1	Ring, Retaining (Internal)	
38	70001966	1	Bearing	
38	70004092	1	Endbell (Shaft End)	
38	70004099	1	Key	
38	70004676	1	Rotor	
38	70004687	1	Stator	
38	70004678	1	Endbell (Rear)	
38	70004679	1	Cover, Endbell (Rear)	
38	70004680	1	Enclosure, Wiring	

ITEM	PART NUMBER	QTY	DESCRIPTION	REV
38	70004685	1	Cover, Enclosure	
38	70004682	1	Switch, Reset (Located on Enclosure Cover)	
38	70004098	1	Connector, Strain Relief (Located on Enclosure Cover)	
39	1001110873	1	Cover, Receptacle	
40		Ref	Wiring Diagram Components (Not Shown)	
40A	1001153259	1	Generator Control Box to Engine Harness (See Separate Breakdwon in ELECTRICAL SECTION)	
40B	4922641	1	Generator On/Off Switch Harness	
41	1001152532	1	Generator to Control Box (See Separate Breakdown in ELECTRICAL SECTION)	
42	1001138566	1	Control Box Assembly	
42	70006552	1	Capacitor	
42	70006553	1	Relay	
43	1001142643	1	Support, Tensioner	
44	1001142646	1	Belt, Generator	
45	1001152457	1	Junction Box Assembly	
45	3300396	1	Cover, Breaker	
45	4360070	1	Breaker, Circuit - 15Amp	
45	4460425	1	Connector, Strain Relief (LH Side)	
45	4460426	1	Connector, Strain Relief (RH Side)	
46	1001163599	2	Stud	

FIGURE 3-60. 7500W/50HZ SKYPOWER GENERATOR INSTALLATION - DEUTZ D2011 ENGINES

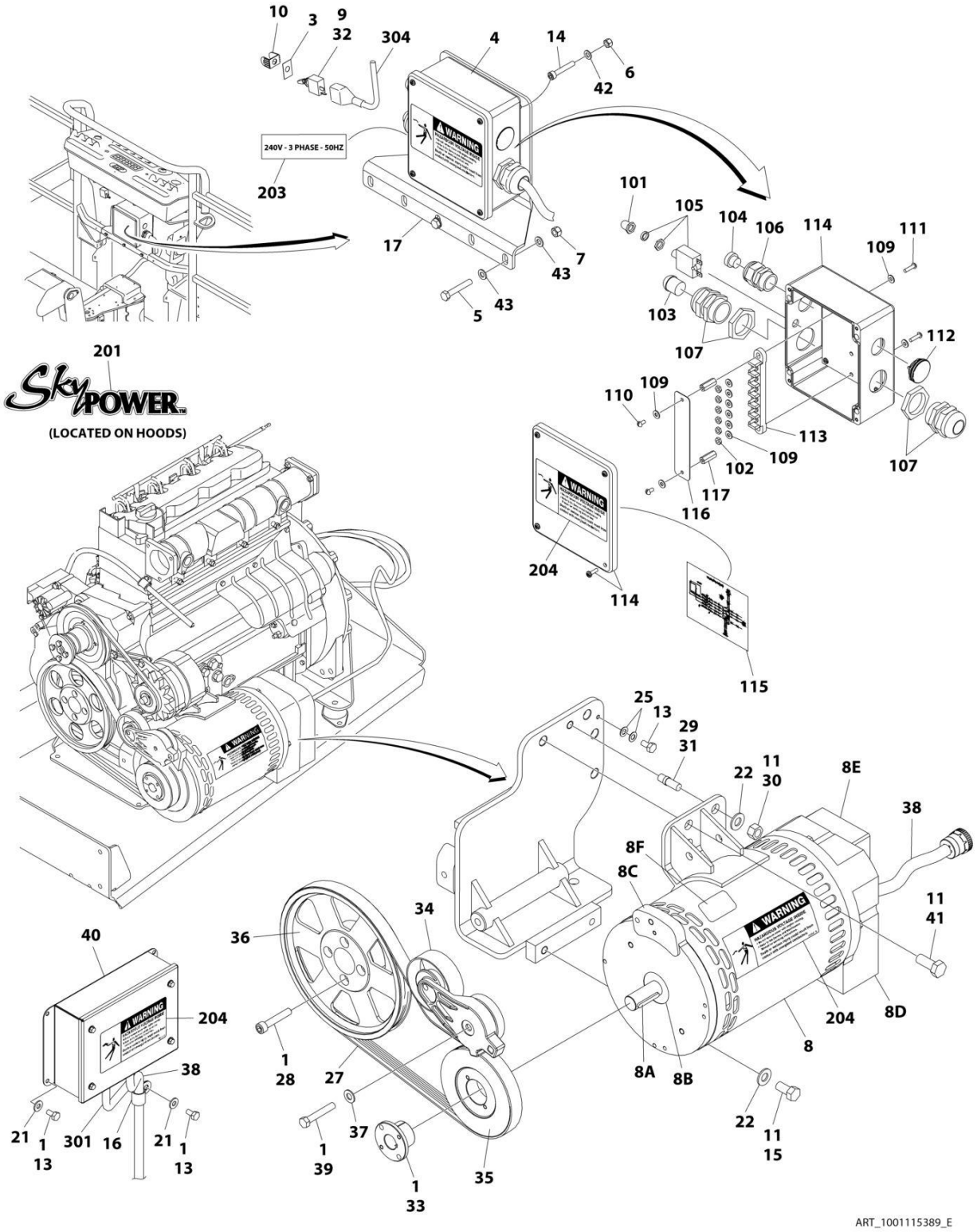

FIGURE 3-60. 7500W/50HZ SKYPOWER GENERATOR INSTALLATION - DEUTZ D2011 ENGINES

ITEM	PART NUMBER	QTY	DESCRIPTION	REV
	1001115389	Ref	7500W/50HZ SKYPOWER GENERATOR INSTALLATION - DEUTZ D2011 ENGINE MACHINES	E
1	0100011	AR	Compound, Locking	
3	3252764	1	Nameplate	
4	1001157525	1	Junction Box Assembly (See Items 101-117 for Breakdown)	
5	0641516	3	Bolt 5/16 x 2	
6	3311005	4	Nut #10	
7	3311508	3	Nut 5/16	
8	2460048	1	Generator Assembly (Deutz D2011 Engines)	
8	70001100	1	Rotor (Includes p/n 70001384 & 70000863) (Not Shown)	
8	70001384	1	Bearing, Ball Radial (Not Shown):	
8	70000863	1	Fan (Not Shown)	
8	70002088	1	Stator	
8	70002297	1	Stud	
8	7024484	NLA	Brushholder Assembly (Not Shown) (Use p/n 70003631)	
8A	7024561	NLA	Key	
8B	70001966	1	Bearing, Ball Radial (Located in Belt Tensioner Endbell)	
8B	70003708	1	Ring, Internal Retaining (Located in Belt Tensioner Endbell)	
8B	70003709	1	Ring, External Retaining (Located in Belt Tensioner Endbell)	
8C	70001953	1	Endbell, Belt Tensioner	
8D	70001385	NLA	Endbell, Brush Block (use p/n 70004169)	
8E	70002290	NLA	Shroud (Use p/n 70004169)	
8E	See Note	NSS	Insulator, Endbell (Note: Not Available for Purchase)	
8E	7027799	1	Block, Connector 6 Position (Not Shown)	
8E	70002460	1	Nut, Brass (Attaches p/n 7027799 to Cover) (Not Shown)	
8E	7024485	1	Breaker, Circuit 30Amp (Not Shown):	
8E	70001696	1	Boot, Breaker (Not Shown):	
8E	7026626	1	Connector, 6 Position (Includes Seal) (Not Shown - Plugs into Item 36)	
8E	7026597	1	Connector, W/Leads (Not Shown)	
8E	7026188	1	Clamp, Cable (Not Shown)	
8E	70004169	1	Plate, End Panel	
8E	70001974	1	Decal - Terminal Connections	
8F	70001973	1	Decal - Warning Moving Parts	
9	4360336	1	Switch, Toggle	
10	4060802	1	Guard, Switch	
11	0100019	AR	Compound, Locking	
13	0641404	6	Bolt 1/4 x 1/2	
14	3931016	4	Capscrew 3/8 x 1	
15	0641808	2	Bolt 1/2 x 1	
16	1320318	1	Clamp	
17	0902888	1	Bracket, Box Mounting	
20	4240018	AR	Tie-Strap (Not Shown)	
21	4711400	5	Washer 1/4	
22	4711800	3	Washer 1/2	
25	4791400	2	Washer 1/4	
27	0480126	1	Belt, Drive	
28	4032015	4	Capscrew M10 x 55	
29	4300157	1	Stud	
30	3311801	1	Nut 1/2	

ITEM	PART NUMBER	QTY	DESCRIPTION	REV
31	0100062	AR	Adhesive (Not Shown)	
32	2820031	1	Insulator	
33	0962520	1	Bushing, Split Taper	
34	3580317	1	Tensioner, Belt	
35	3580319	1	Pulley	
36	3580320	1	Pulley	
37	4711600	1	Washer 3/8	
38	4922925	1	Generator to Control Box Harness (See Separate Breakdown in ELECTRICAL SECTION)	
39	0641618	1	Bolt 3/8 x 2-1/4	
40	0861572	1	Control Box Assembly	
40	7024488	1	Card, Circuit - Generator Power	
40	See Note	1	Fuse (Note: Not Available - Purchase Locally)	
40	70000619	1	Harness, Control Box (Internal)	
40	7024489	1	Card, Circuit - Control	
		Ref	Note: Same Circuit Card (P/N 7024489) is used for both 60Hz & 50Hz Specs. When replacing card, rocker switch on card must be set for required application.	
41	0771415	1	Bolt M14 x 35 Grade 10.9	
42	4751000	4	Washer #10	
43	4751500	3	Washer 5/16	
	1001157525	Ref	JUNCTION BOX ASSEMBLY	B
101	3300396	1	Cover, Fuse	
102	3311001	6	Nut #10-24	
103	3520189	1	Plug	
104	3520192	1	Plug	
105	4360070	1	Circuit Breaker - 15 Amp	
106	4460425	1	Connector, Strain Relief	
107	4460426	2	Connector, Strain Relief	
109	4711000	10	Washer #10	
110	10702077	2	Screw #10 x 3/8	
111	10702082	2	Screw #10 x 3/4	
112	1001152525	1	Plug	
113	1001157520	1	Block, Terminal	
114	1001157521	1	Box, Junction	
115	1001157528	1	Decal - Wiring Schematic	
116	1001158007	1	Cover, PVC	
117	1001158008	2	Stand-Off	
	0272589	Ref	DECAL INSTALLATION	A
201	1705460	2	Decal - SkyPower	
203	1705461	1	Decal - 240V - 3 Phase	
204	1705489	3	Decal, Hazardous Voltage	
	1001157769	Ref	ELECTRICAL DIAGRAM COMPONENTS	B
301	1001152429	1	Generator Harness (See Separate Breakdown in ELECTRICAL SECTION)	
304	4922641	1	Switch Harness	

FIGURE 3-61. 7500W/50HZ SKYPOWER GENERATOR INSTALLATION - DEUTZ TD2.9L4 ENGINES AND DEUTZ TD2.9L4 (STAGE V) ENGINES

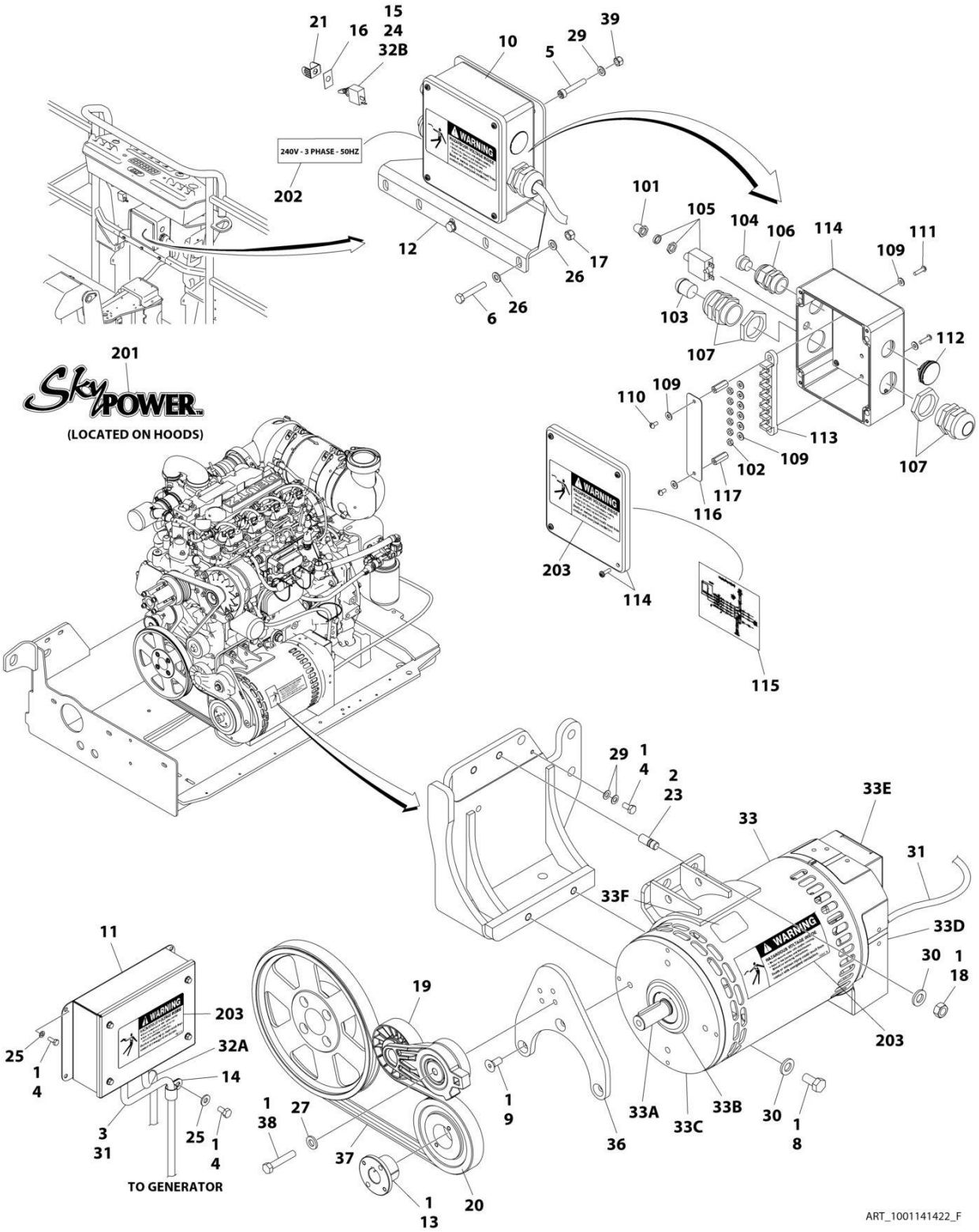

FIGURE 3-61. 7500W/50HZ SKYPOWER GENERATOR INSTALLATION - DEUTZ TD2.9L4 ENGINES AND DEUTZ TD2.9L4 (STAGE V) ENGINES

ITEM	PART NUMBER	QTY	DESCRIPTION	REV
	1001141422	Ref	7500W SKYPOWER GENERATOR INSTALLATION	F
1	0100011	AR	Compound, Locking	
2	0100019	AR	Compound, Locking	
3	0100048	AR	Compound Terminal	
4	0641404	6	Bolt 1/4 x 1/2	
5	3931016	4	Capscrew #10 x 1	
6	0641516	3	Bolt 5/16 x 2	
8	0641808	2	Bolt 1/2 x 1	
9	0741607	3	Screw 3/8 x 7/8	
10	1001157525	1	Junction Box Assembly (See Items 101 - 117 for Breakdown)	
11	0861572	1	Control Box Assembly	
11	0860038	1	Box, Receptacle	
11	7024488	1	Card, Circuit - Generator Power	
11	See Note	NSS	Fuse (Note: Not Available - Purchase Locally)	
11	7024489	1	Card, Circuit - Control	
11	70000619	1	Harness, Control Box (Internal)	
11		Ref	Note: Same Circuit Card (P/N 7024489) is used for both 60Hz and 50Hz. When replacing card, rocker switch on card must be set for required application.	
12	0902888	1	Bracket	
13	0962520	1	Bushing, Split	
14	1320318	1	Clamp	
15	2820031	AR	Heat Shrink	
16	3252764	1	Nameplate - AC & Weld	
17	3311505	3	Nut 5/16	
18	3311801	2	Nut 1/2	
19	3580317	1	Tensioner, Belt	
20	3580319	1	Pulley	
21	4060802	1	Guard, Switch	
22	4240018	AR	Tie - Strap (Not Shown)	
23	1001163599	2	Stud	
24	4360336	1	Switch, Toggle	
25	4711400	5	Washer 1/4	
26	4711500	6	Washer 5/16	
27	4711600	1	Washer 3/8	
28	4751000	4	Washer #10	
29	4791400	2	Washer 1/4	
30	4891800	4	Washer 1/2	
31	4922925	1	Generator to Control Box Harness (See Separate Breakdown in ELECTRICAL SECTION)	
32		Ref	Wiring Diagram Components (Not Shown)	
32A	1001119968	1	Generator to Engine Harness (See Separate Breakdown in ELECTRICAL SECTION)	
32B	4922641	1	Generator On/Off Switch Harness	
33	1001212223	1	Generator Assembly	
33	70001100	1	Rotor (Includes p/n 70001384 & 70000863) (Not Shown)	
33	70001384	1	Bearing, Ball Radial (Not Shown)	
33	70000863	1	Fan (Not Shown)	
33	70006093	1	Stator (Not Shown)	
33	70002297	1	Stud	

ITEM	PART NUMBER	QTY	DESCRIPTION	REV
33	70003631	1	Brushholder Assembly (Not Shown) (was p/n 7024484)	
33A	70004099	1	Key	
33B	70001966	1	Bearing, Ball Radial (Located in Belt Tensioner Endbell)	
33B	70003708	1	Ring, Internal Retaining (Located in Belt Tensioner Endbell)	
33B	70003709	1	Ring, External Retaining (Located in Belt Tensioner Endbell)	
33C	70004092	1	Endbell, Belt Tensioner	
33D	70004094	1	Endbell, Brush Block	
33E	70006094	1	Shroud	
33E	70002291	1	Insulator, Endbell	
33E	7027799	1	Block, Connector - 6 Position (Not Shown)	
33E	70002460	1	Nut, Brass (Attaches p/n 7027799 to Cover) (Not Shown)	
33E	70006095	1	Breaker, Circuit 30Amp (Not Shown)	
33E	70006096	1	Boot, Breaker (Not Shown)	
33E	7026626	1	Connector, 6 Position (Includes Seal) (Not Shown - Plugs into Item 45)	
33E	7026597	1	Connector with Leads (Not Shown)	
33E	70004098	1	Clamp, Cable (Not Shown)	
33E	70006097	1	Plate, End Panel	
33E	70001974	1	Decal - Terminal Connections	
33F	70001973	1	Decal - Warning Moving Parts	
36	1001142643	1	Support	
37	1001142645	1	Belt	
38	0641616	1	Bolt 3/8 x 2	
39	3311005	4	Nut #10	
	1001157525	Ref	JUNCTION BOX ASSEMBLY	B
101	3300396	1	Cover, Fuse	
102	3311001	6	Nut #10	
103	3520189	1	Plug	
104	3520192	1	Plug	
105	4360070	1	Circuit Breaker - 15Amp	
106	4460425	1	Connector, Strain Relief	
107	4460426	2	Connector, Strain Relief	
109	4711000	10	Washer #10	
110	10702077	2	Screw #10 x 3/8	
111	10702082	2	Screw #10 x 3/4	
112	1001152525	1	Plug	
113	1001152520	1	Block, Terminal	
114	1001157521	1	Box, Junction	
115	1001157528	1	Decal - Wiring Schematic	
116	1001158007	1	Cover, PVC	
117	1001158008	2	Stand-Off	
	0272589	Ref	DECAL INSTALLATION	A
201	1705460	2	Decal - SkyPower	
202	1705461	1	Decal - 240V - 3 Phase - 50Hz	
203	1705489	3	Decal - Hazardous Voltage	

FIGURE 3-62. 7500W/60HZ SKYPOWER GENERATOR INSTALLATION - DEUTZ D2011 ENGINES

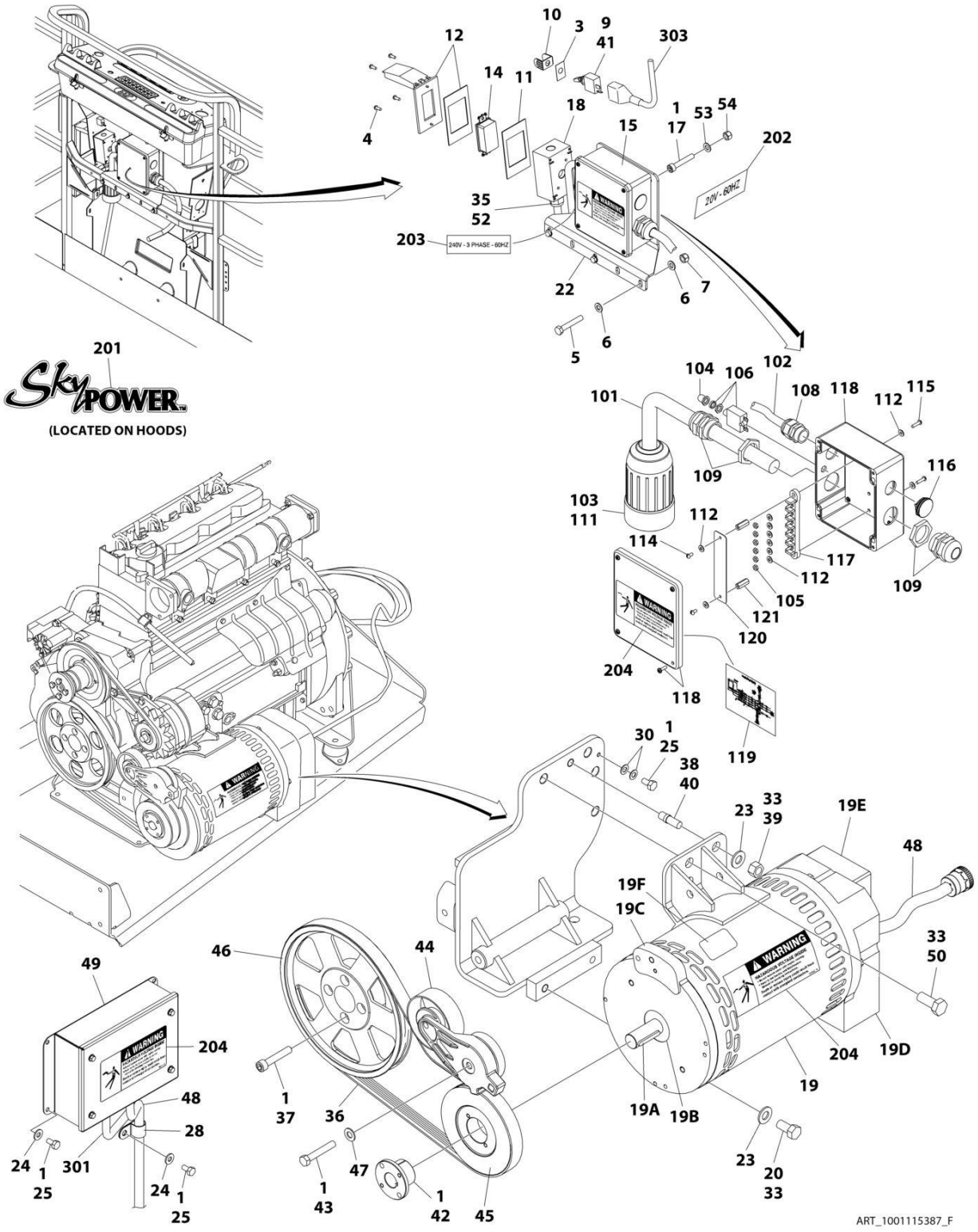

FIGURE 3-62. 7500W/60HZ SKYPOWER GENERATOR INSTALLATION - DEUTZ D2011 ENGINES

ITEM	PART NUMBER	QTY	DESCRIPTION	REV
	1001115387	Ref	7500W 60HZ SKYPOWER GENERATOR INSTALLATION - DEUTZ D2011 ENGINE MACHINES	F
1	0100011	AR	Compound, Locking	
3	3252764	1	Nameplate	
4	3910606	4	Screw #6 x 3/8	
5	0641516	3	Bolt 5/16 x 2	
6	4751500	3	Washer 5/16	
7	3311508	3	Nut 5/16	
9	4360336	1	Switch, Toggle	
10	4060802	1	Guard, Switch	
11	3960422	1	Gasket	
12	1001110873	1	Cover, Receptacle (60Hz Specs)	
14	4460346	1	Receptacle, Female	
15	1001157592	1	Junction Box Assembly (See Items 101-124 for Breakdown)	
17	3931016	4	Capscrew 3/8 x 1	
18	0860038	1	Box, Switch	
19	2460048	1	Generator Assembly (Deutz D2011 Engines)	
19	70001100	1	Rotor (Includes p/n 70001384 & 70000863) (Not Shown)	
19	70001384	1	Bearing, Ball Radial (Not Shown):	
19	70000863	1	Fan (Not Shown)	
19	70002088	1	Stator	
19	70002297	1	Stud	
19	7024484	NLA	Brushholder Assembly (Not Shown) (Use p/n 70003631)	
19A	7024561	NLA	Key - 2460048 Generator (Use p/n 70004171)	
19B	70001966	1	Bearing, Ball Radial (Located in Belt Tensioner Endbell)	
19B	70003708	1	Ring, Internal Retaining (Located in Belt Tensioner Endbell)	
19B	70003709	1	Ring, External Retaining (Located in Belt Tensioner Endbell)	
19C	70001953	1	Endbell, Belt Tensioner	
19D	70001385	NLA	Endbell, Brush Block - (Use p/n 70004169)	
19E	70002290	NLA	Shroud - (Use p/n 70004169)	
19E	See Note	NSS	Insulator, Endbell (Note: Not Available for Purchase)	
19E	7027799	1	Block, Connector 6 Position (Not Shown)	
19E	70002460	1	Nut, Brass (Attaches p/n 7027799 to Cover) (Not Shown)	
19E	7024485	1	Breaker, Circuit 30Amp (Not Shown)	
19E	70006095	1	Breaker - 1001212223 Generator	
19E	70001696	1	Boot, Breaker (Not Shown):	
19E	7026626	1	Connector, 6 Position (Includes Seal) (Not Shown - Plugs into Item 36)	
19E	7026597	1	Connector, W/Leads (Not Shown)	
19E	7026188	1	Clamp, Cable (Not Shown)	
19E	70004169	1	Plate, End Panel:	
19E	70001974	1	Decal - Terminal Connections	
19F	70001973	1	Decal - Warning Moving Parts	
20	0641808	2	Bolt 1/2 x 1	
22	0902888	1	Bracket, Box Mounting	
23	4711800	3	Washer 1/2	
24	4711400	5	Washer 1/4	
25	0641404	6	Bolt 1/4 x 1/2	
28	1320318	1	Clamp	
29	4240018	AR	Tie-Strap (Not Shown)	

ITEM	PART NUMBER	QTY	DESCRIPTION	REV
30	4791400	2	Washer 1/4	
33	0100019	AR	Compound, Locking	
35	4460071	1	Connector, Strain Relief	
36	0480129	1	Belt, Drive	
37	4032015	4	Capscrew M10 x 55	
38	4300157	1	Stud	
39	3311801	1	Nut 1/2-13	
40	0100062	AR	Compound, Locking	
41	2820031	1	Insulator	
42	0962520	1	Bushing, Split Taper	
43	0641618	1	Bolt 3/8 x 2-1/4	
44	3580317	1	Tensioner, Belt	
45	3580318	1	Pulley	
46	3580320	1	Pulley	
47	4711600	1	Washer 3/8	
48	4922925	1	Generator to Control Box Harness (See Separate Breakdown in ELECTRICAL SECTION)	
49	0861538	1	Control Box Assembly	
49	7024488	1	Card, Circuit - Generator Power	
49	See Note	1	Fuse (Note: Not Available - Purchase Locally)	
49	70000619	1	Harness, Control Box (Internal)	
49	7024489	1	Card, Circuit - Control	
49		Ref	Note: Same Circuit Card (P/N 7024489) is used for both 60Hz & 50Hz Specs. When replacing card, rocker switch on card must be set for required application.	
50	0771415	1	Bolt M14 x 35 Grade 10.9	
52	0100020	AR	Sealant	
53	4751000	4	Washer #10	
54	3311005	4	Nut #10	
	1001157592	Ref	JUNCTION BOX ASSEMBLY	C
101	1060343	1.5 ft /.46m	Cable, Electrical 10/4	
102	1001179154	2.5 ft /.76m	Cable, Electrical 12/3	
103	1671092	1	Cover	
104	3300396	1	Cover, Fuse	
105	3311001	6	Nut #10	
106	4360070	1	Circuit Breaker - 15 Amp	
108	4460425	1	Connector, Strain Relief	
109	4460426	2	Connector, Strain Relief	
111	4460963	1	Connector	
112	4711000	4	Washer #10	
114	10702077	2	Screw #10 x 3/8	
115	10702082	2	Screw #10 x 3/4	
116	1001152525	1	Plug	
117	1001157520	1	Block, Terminal	
118	1001157521	1	Box, Junction	
119	1001157528	1	Decal - Wiring Schematic	
120	1001158007	1	Cover, PVC	
121	1001158008	1	Stand-Off	
	0272435	Ref	DECAL INSTALLATION	D
201	1705460	2	Decal - SkyPower	

ITEM	PART NUMBER	QTY	DESCRIPTION	REV
202	3251243	1	Decal - 120V - 60Hz (Not Shown - Located on Platform Receptacle)	
203	1705375	1	Decal - 240V - 3 Phase	
204	1705387	3	Decal, Hazardous Voltage	
	1001157769	Ref	ELECTRICAL DIAGRAM COMPONENTS	B
301	1001152429	1	Generator Harness (See Separate Breakdown in ELECTRICAL SECTION)	C
303	4922641	1	Switch Harness	

FIGURE 3-63. 7500W/60HZ SKYPOWER GENERATOR INSTALLATION - DEUTZ TD2.9L4 ENGINES

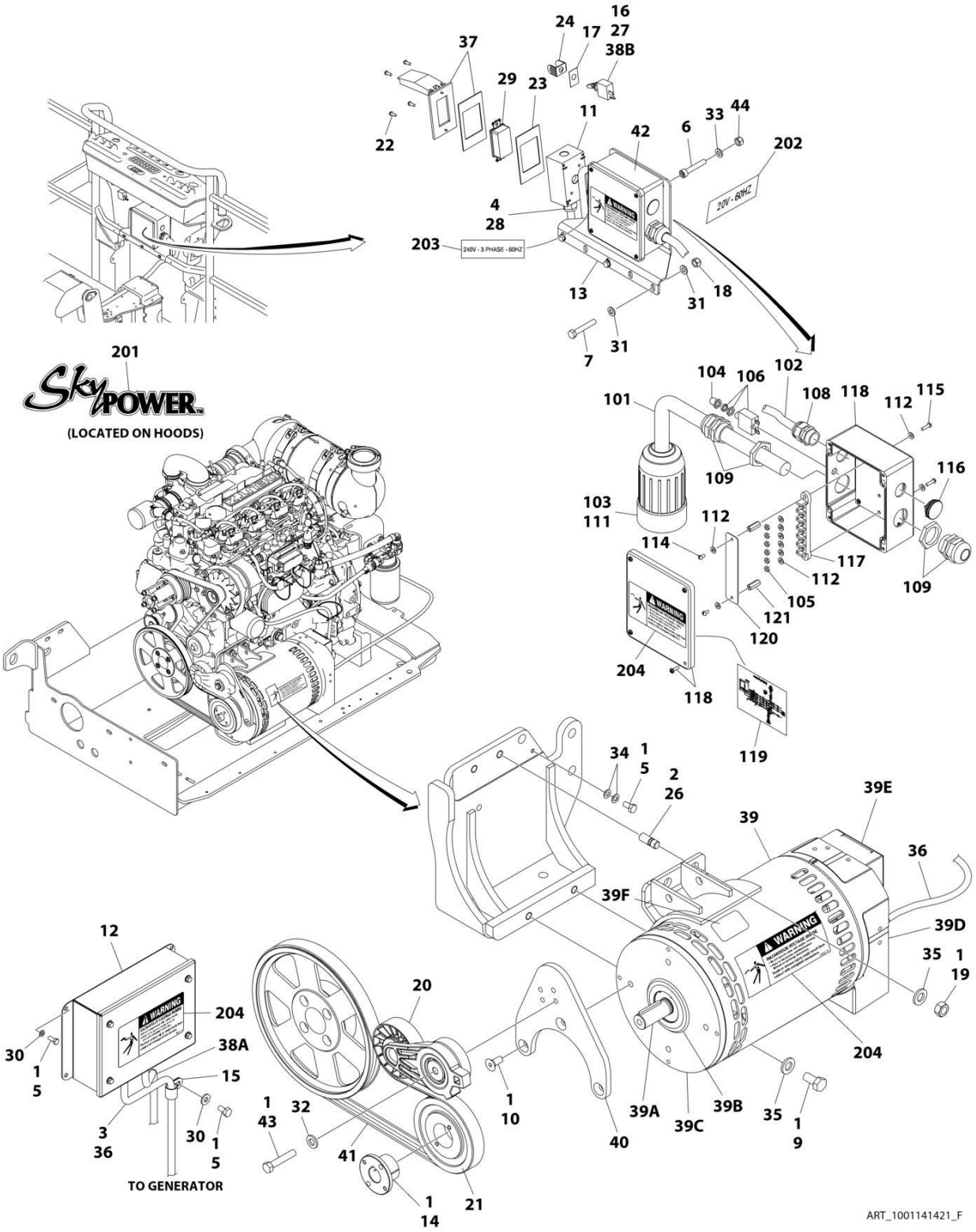

FIGURE 3-63. 7500W/60HZ SKYPOWER GENERATOR INSTALLATION - DEUTZ TD2.9L4 ENGINES

ITEM	PART NUMBER	QTY	DESCRIPTION	REV
	1001141421	Ref	7500W SKYPOWER GENERATOR INSTALLATION	F
1	0100011	AR	Compound, Locking	
2	0100019	AR	Compound, Locking	
3	0100048	AR	Compound Terminal	
4	0100079	AR	Sealant	
5	0641404	6	Bolt 1/4 x 1/2	
6	3931016	4	Capscrew #10 x 1	
7	0641516	3	Bolt 5/16 x 2	
9	0641808	2	Bolt 1/2 x 1	
10	0741607	3	Screw 3/8 x 7/8	
11	0860038	1	Box, Receptacle	
12	0861538	1	Control Box Assembly	
12	7024488	1	Card, Circuit - Generator Power	
12	See Note	NSS	Fuse (Note: Not Available - Purchase Locally)	
12	7024489	1	Card, Circuit - Control	
12	70000619	1	Harness, Control Box (Internal)	
		Ref	Note: Same Circuit Card (P/N 7024489) is used for both 60Hz and 50Hz. When replacing card, rocker switch on card must be set for required application.	
13	0902888	1	Bracket	
14	0962520	1	Bushing, Split	
15	1320318	1	Clamp	
16	2820031	AR	Heat Shrink	
17	3252764	1	Nameplate - AC & Weld	
18	3311505	3	Nut 5/16	
19	3311801	2	Nut 1/2	
20	3580317	1	Tensioner, Belt	
21	3580318	1	Pulley	
22	3910606	4	Screw #6 x 3/8	
23	3960422	1	Gasket	
24	4060802	1	Guard, Switch	
25	4240018	AR	Tie - Strap (Not Shown)	
26	1001163599	2	Stud	
27	4360336	1	Switch, Toggle	
28	4460071	1	Connector, Strain Relief	
29	4460346	1	Receptacle	
30	4711400	5	Washer 1/4	
31	4711500	6	Washer 5/16	
32	4711600	1	Washer 3/8	
33	4751000	4	Washer #10	
34	4791400	2	Washer1/4	
35	4891800	4	Washer 1/2	
36	4922925	1	Generator to Control Box Harness (See Separate Breakdown in ELECTRICAL SECTION)	
37	1001110873	1	Cover	
38		Ref	Wiring Diagram Components (Not Shown)	
38A	1001119968	1	Generator to Engine Harness (See Separate Breakdown in ELECTRICAL SECTION)	
38B	4922641	1	Generator ON/OFF Switch Harness	
39	1001212223	1	Generator Assembly	

ITEM	PART NUMBER	QTY	DESCRIPTION	REV
39	70001100	1	Rotor (Includes p/n 70001384 & 70000863) (Not Shown)	
39	70001384	1	Bearing, Ball Radial (Not Shown)	
39	70000863	1	Fan (Not Shown)	
39	70006093	1	Stator (Not Shown)	
39	70002297	1	Stud	
39	70003631	1	Brushholder Assembly (Not Shown) (was p/n 7024484)	
39A	70004099	1	Key	
39B	70001966	1	Bearing, Ball Radial (Located in Belt Tensioner Endbell)	
39B	70003708	1	Ring, Internal Retaining (Located in Belt Tensioner Endbell)	
39B	70003709	1	Ring, External Retaining (Located in Belt Tensioner Endbell)	
39C	70004092	1	Endbell, Belt Tensioner	
39D	70004094	1	Endbell, Brush Block	
39E	70006094	1	Shroud	
39E	70002291	1	Insulator, Endbell	
39E	7027799	1	Block, Connector - 6 Position (Not Shown)	
39E	70002460	1	Nut, Brass (Attaches p/n 7027799 to Cover) (Not Shown)	
39E	70006095	1	Breaker, Circuit 30Amp (Not Shown)	
39E	70006096	1	Boot, Breaker (Not Shown)	
39E	7026626	1	Connector, 6 Position (Includes Seal) (Not Shown - Plugs into Item 45)	
39E	7026597	1	Connector with Leads (Not Shown)	
39E	70004098	1	Clamp, Cable (Not Shown)	
39E	70006097	1	Plate, End Panel	
39E	70001974	1	Decal - Terminal Connections	
39F	70001973	1	Decal - Warning Moving Parts	
40	1001142643	1	Support	
41	1001142646	1	Belt	
42	1001157592	1	Junction Box Assembly (See Items 101-121 for Breakdown)	
43	0641616	1	Bolt 3/8 x 2	
44	3311005	4	Nut #10	
	1001157592	Ref	JUNCTION BOX ASSEMBLY	C
101	1060343	1.5 ft/ 0.5m	Cable, Electrical 10/4	
102	1001179154	2.5 ft/ 76cm	Cable, Electrical 12/3	
103	1671092	1	Cover, Connector	
104	3300396	1	Cover, Fuse	
105	3311001	6	Nut #10	
106	4360070	1	Circuit Breaker - 15Amp	
108	4460425	1	Connector, Strain Relief	
109	4460426	2	Connector, Strain Relief	
111	4460963	1	Connector	
112	4711000	4	Washer #10	
114	10702077	2	Screw #10 x 3/8	
115	10702082	2	Screw #10 x 3/4	
116	1001152525	1	Plug	
117	1001157520	1	Block, Terminal	
118	1001157521	1	Box, Junction	
119	1001157528	1	Decal - Wiring Schematic	
120	1001158007	1	Cover, PVC	
121	1001158008	1	Stand-Off	
	0272435	Ref	DECAL INSTALLATION	D

ITEM	PART NUMBER	QTY	DESCRIPTION	REV
201	1705460	2	Decal - SkyPower	
202	3251243	1	Decal - 120V-60Hz	
203	1705375	1	Decal - 240V - 3 Phase - 60Hz	
204	1705387	3	Decal - Hazardous Voltage	

FIGURE 3-64. 7500W/60HZ SKYPOWER GENERATOR INSTALLATION - FORD ENGINES

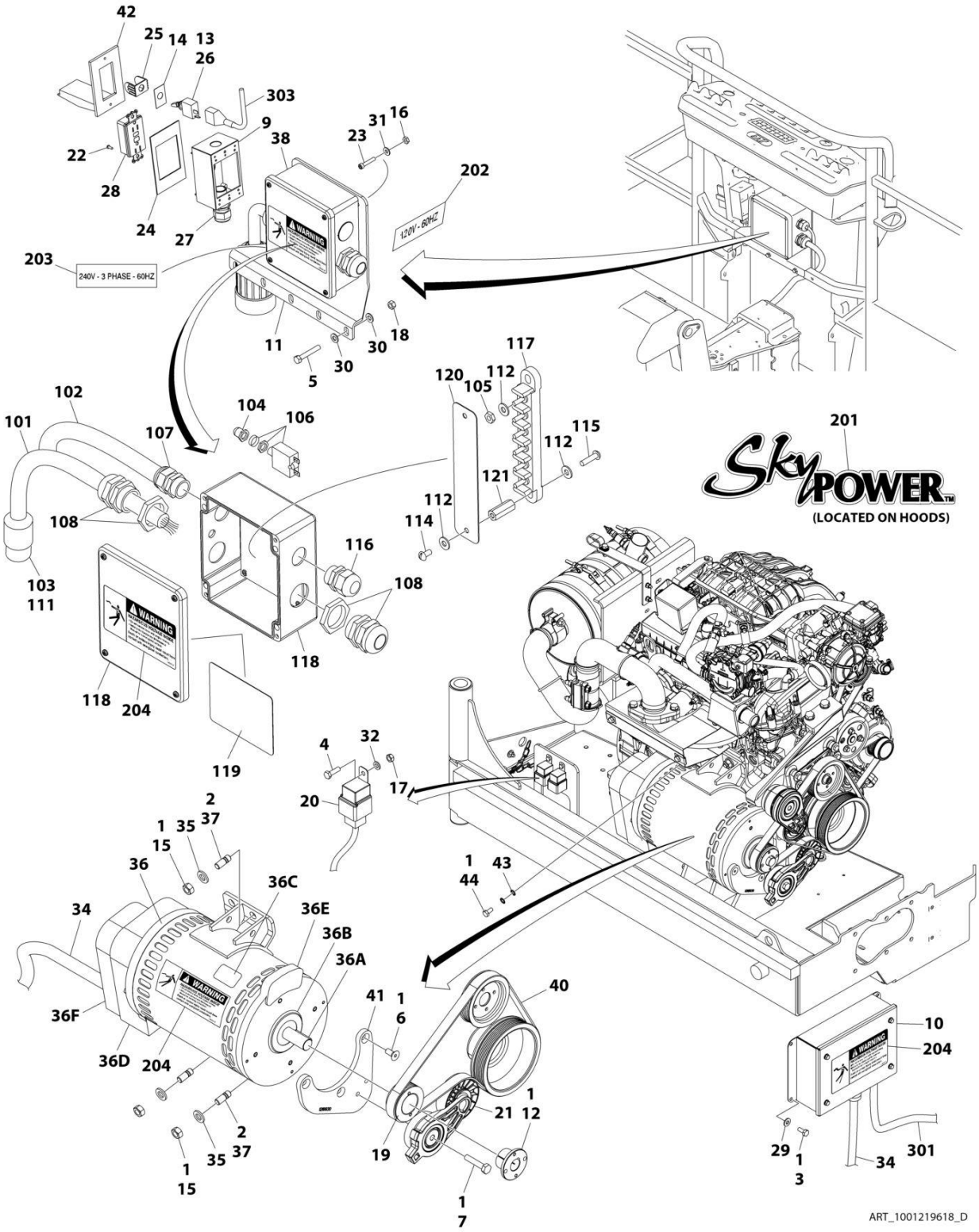

FIGURE 3-64. 7500W/60HZ SKYPOWER GENERATOR INSTALLATION - FORD ENGINES

ITEM	PART NUMBER	QTY	DESCRIPTION	REV
	1001219618	Ref	7500W SKYPOWER GENERATOR INSTALLATION - FORD ENGINES	D
		Ref	Note: See ELECTRICAL SECTION for Boom Cable Components.	
1	0100011	AR	Compound, Locking	
2	0100019	AR	Compound, Locking	
3	0641405	4	Bolt 1/4 x 5/8	
4	0760610	2	Bolt M6 x 20	
5	0641516	3	Bolt 5/16 x 2	
6	0741607	3	Screw 3/8 x 7/8	
7	0761018	1	Bolt M10 x 50	
9	0860038	1	Box, Switch	
10	0861538	1	Control Box Assembly	
10	7024488	1	Card, Circuit - Generator Power	
10	See Note	1	Fuse (Note: Not Available - Purchase Locally)	
10	7024489	1	Card, Circuit - Control	
10	70000619	1	Harness, Circuit Card	
11	0902888	1	Bracket, Box Mounting	
12	0962520	1	Bushing, Split Taper	
13	2820031	1	Heat Shrink	
14	3252764	1	Nameplate - AC & Weld	
15	3291201	4	Nut M12	
16	3311005	4	Nut #10	
17	3290601	2	Nut M6	
18	3311505	3	Nut 5/16	
19	3580314	1	Pulley	
20	3740080	2	Relay	
21	3580317	1	Tensioner, Belt	
22	3910606	2	Screw #6 x 3/8	
23	3931016	4	Capscrew #10 x 1	
24	3960422	1	Gasket	
25	4060802	1	Guard, Switch	
26	4360336	1	Switch, Toggle	
27	4460071	1	Connector, Strain Relief	
28	4460346	1	Receptacle	
29	4711400	4	Washer 1/4	
30	4711500	6	Washer 5/16	
31	4751000	4	Washer #10	
32	4811700	2	Washer M6	
34	4922925	1	Harness, Generator	
35	5241200	4	Washer M12	
36	1001136104	1	Generator Assembly	
36	70003631	1	Brushholder Assembly (Not Shown) (was p/n 7024484)	
36	7024485	1	Breaker, Circuit 30Amp (Not Shown)	
36	70001696	1	Boot, Breaker (was p/n 7024486 - Not Shown)	
36	70001966	1	Bearing, Ball Radial (Located In Belt Tensioner Endbell - Not Shown)	
36	7027799	1	Block, Connector 6 Position (Not Shown)	
36	70002460	6	Nut, Brass (Attaches p/n 7027799 to Cover) (Not Shown)	
36	7026188	1	Clamp, Cable (Not Shown)	
36	7026597	1	Connector, W/Leads (Not Shown)	

ITEM	PART NUMBER	QTY	DESCRIPTION	REV
36	7026626	1	Connector - 6 Position with Seal (Not Shown)	
36	70002088	1	Stator (Not Shown)	
36	70004169	1	Panel, End (Not Shown) (was p/n 70002255)	
36	70001974	1	Decal - Terminal Connections (Not Shown)	
36	70000863	1	Fan (Not Shown)	
36	70002297	4	Stud (Not Shown)	
36A	70004171	1	Key (was p/n 7024561)	
36A	70001100	1	Armature, Generator (Includes Radial Ball Bearing on End with Brushes and Fan)	
36A	70001384	1	Bearing, Ball Radial	
36B	70001966	1	Bearing, Radial Ball	
36B	70003708	1	Ring, Internal Retaining (Located in Belt Tensioner Endbell)	
36B	70003709	1	Ring, External Retaining (Located in Belt Tensioner Endbell)	
36C	70001973	1	Decal - Warning Moving Parts	
36D	70004169	1	Endbell, Brush Block (was p/n 70001385)	
36E	70001953	1	Endbell, Belt Tensioner	
36F	70004169	1	Endbell, Shroud Assembly (was p/n 70002290)	
37	1001196382	4	Stud	
38	1001157592	1	Junction Box Assembly (See Items 101-121 for Breakdown)	
40	1001216390	1	V-Belt	
41	1001218930	1	Mount, Tensioner	
42	1001110873	1	Cover, Receptacle	
43	4871700	2	Washer M6	
44	0760606	1	Bolt M6 x 12	
	1001157592	Ref	JUNCTION BOX ASSEMBLY	C
101	1060343	1.5 ft /0.46m	Cable, Electrical - 10/4 (60Hz Only)	
102	1001179154	2.5 ft /0.76m	Cable Electrical - 12/3	
103	1671092	1	Cover, Connector	
104	3300396	1	Cover, Fuse	
105	3311001	6	Nut #10	
106	4360070	1	Breaker, Circuit 15Amp	
107	4460425	1	Connector, Strain Relief	
108	4460426	2	Connector, Strain Relief	
111	4460963	1	Receptacle	
112	4711000	10	Washer #10	
114	10702077	2	Screw #10 x 3/8	
115	10702082	2	Screw #10 x 3/4	
116	1001152525	1	Plug, Hole	
117	1001157520	1	Block, Terminal Pole	
118	1001157521	1	Box, Junction	
119	1001157528	1	Decal - Box Junction	
120	1001158007	1	Cover	
121	1001158008	2	Standoff	
	0272435	Ref	DECAL INSTALLATION	D
201	1705460	2	Decal - SkyPower	
202	3251243	1	Decal - 120V - 60Hz (60Hz Spec Only) (Located on Opposite Side)	
203	1705375	1	Decal - 240V - 3 Phase	
204	1705387	3	Decal, Hazardous Voltage	
	1001221498	Ref	ELECTRICAL DIAGRAM COMPONENTS	B
301	1001257972	1	Generator to Engine Harness (See Separate Breakdown in	

ITEM	PART NUMBER	QTY	DESCRIPTION	REV
			ELECTRICAL SECTION)	
303	4922641	1	Generator On/Off Switch Harness	

SECTION 4 - BOOM

FIGURE 4-1. BOOM AND CYLINDER INSTALLATION

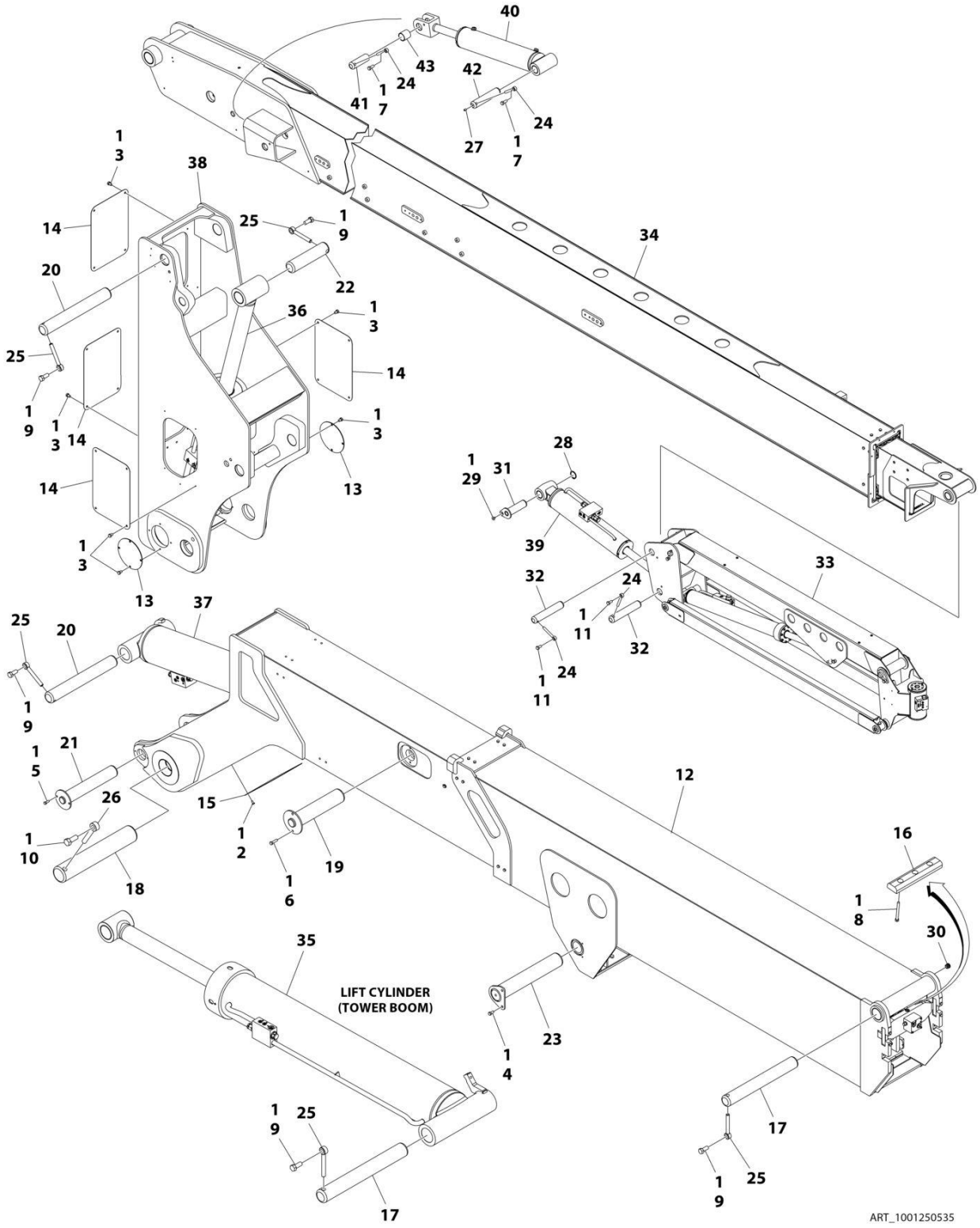

FIGURE 4-1. BOOM AND CYLINDER INSTALLATION

ITEM	PART NUMBER	QTY	DESCRIPTION	REV
	1001250535	Ref	BOOM AND CYLINDER INSTALLATION	C
1	0100011	AR	Compound, Locking	
2	0641404	4	Bolt 1/4 x 1/2	
3	0641604	24	Bolt 3/8 x 1/2	
4	0641606	2	Bolt 3/8 x 3/4	
5	0641608	2	Bolt 3/8 x 1	
6	0641611	2	Bolt 3/8 x 1-3/8	
7	0641810	2	Bolt 1/2 x 1-1/4	
8	0641840	3	Bolt 1/2 x 5	
9	0642214	5	Bolt 3/4 x 1-3/4	
10	0642620	1	Bolt 1 x 2-1/2	
11	0761212	2	Bolt M12	
12	0801132	1	Boom Assembly - Tower (See Separate Breakdown in this Section)	
13	1120510	2	Cover, Upright	
14	1670844	4	Cover, Upright	
15	1670850	1	Cover, Tower Fly	
16	3340835	1	Pad Rest	
17	3422681	2	Pin	
18	3422683	1	Pin	
19	3422684	1	Pin	
20	3422685	2	Pin	
21	3422686	1	Pin	
22	3422687	1	Pin	
23	3422729	1	Pin	
24	3841203	4	Keeper, Rod	
25	3841287	5	Keeper, Pin	
26	3841356	1	Keeper, Pin	
27	3900239	1	Set Screw	
28	1001138671	1	Ring, Snap	
29	1001192027	1	Bolt M10	
30	1001213705	1	Cap	
31	1001237142	1	Pin	
32	1001237949	2	Pin	
33	1001238331	1	Jib Assembly (See Separate Breakdown in this Section)	
34	1001247848	1	Boom Assembly - Main (See Separate Breakdown in this Section)	
35	1001251009	1	Lift Cylinder Assembly - Tower Boom (See Separate Breakdown in CYLINDER SECTION)	
36	1001251010	1	Lift Cylinder Assembly - Main Boom (See Separate Breakdown in CYLINDER SECTION)	
37	1001251041	1	Level Cylinder Assembly - Upright (See Separate Breakdown in CYLINDER SECTION)	
38	1001252315	1	Upright	
39	1001255320	1	Lift Cylinder Assembly - Jib Level (See Separate Breakdown in CYLINDER SECTION)	
40	1001255321	1	Lift Cylinder Assembly - Master (See Separate Breakdown in CYLINDER SECTION)	
41	1001256267	1	Pin	
42	1001257397	1	Pin	
43	1001118666	1	Bearing	

FIGURE 4-2. MAIN BOOM ASSEMBLY

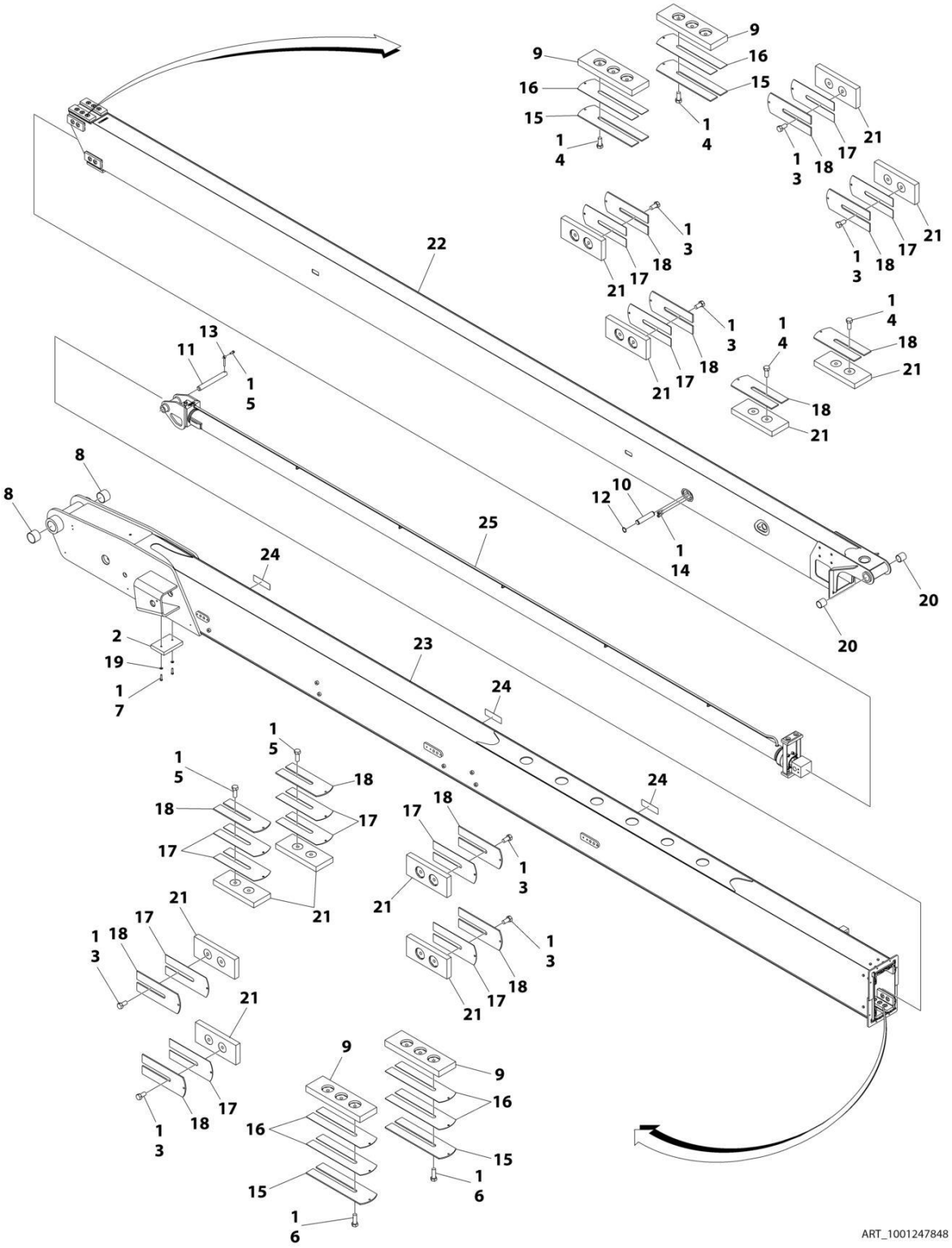

FIGURE 4-2. MAIN BOOM ASSEMBLY

ITEM	PART NUMBER	QTY	DESCRIPTION	REV
	1001247848	Ref	MAIN BOOM ASSEMBLY	A
1	0100011	AR	Compound, Locking	
2	0561295	1	Block, Boom Rest	
3	0641606	16	Bolt 3/8 x 3/4	
4	0641607	10	Bolt 3/8 x 7/8	
5	0641608	5	Bolt 3/8 x 1	
6	0641609	6	Bolt 3/8 x 1-1/8	
7	0641612	2	Bolt 3/8 x 1-1/2	
8	0962102	2	Bushing	
9	3340871	4	Pad, Wear	
10	3422457	1	Pin	
11	3422690	1	Pin	
12	3760133	2	Ring, Retaining	
13	3841143	1	Keeper, Pin	
14	3900259	4	Bolt, Shoulder	
15	4070863	4	Shim 1/8	
16	4070864	6	Shim .05	
17	4070897	12	Shim .05	
18	4070898	12	Shim 1/8	
19	4711600	2	Washer 3/8	
20	1001118666	2	Bearing	
21	1001148652	12	Pad, Wear	
22	1001247846	1	Boom, Fly	
23	1001247847	1	Boom, Base	
24	1001250737	3	Cover	
25	1001251087	1	Cylinder Assembly - Telescope (Main Boom) (See Separate Breakdown in CYLINDER SECTION)	

FIGURE 4-3. TOWER BOOM ASSEMBLY

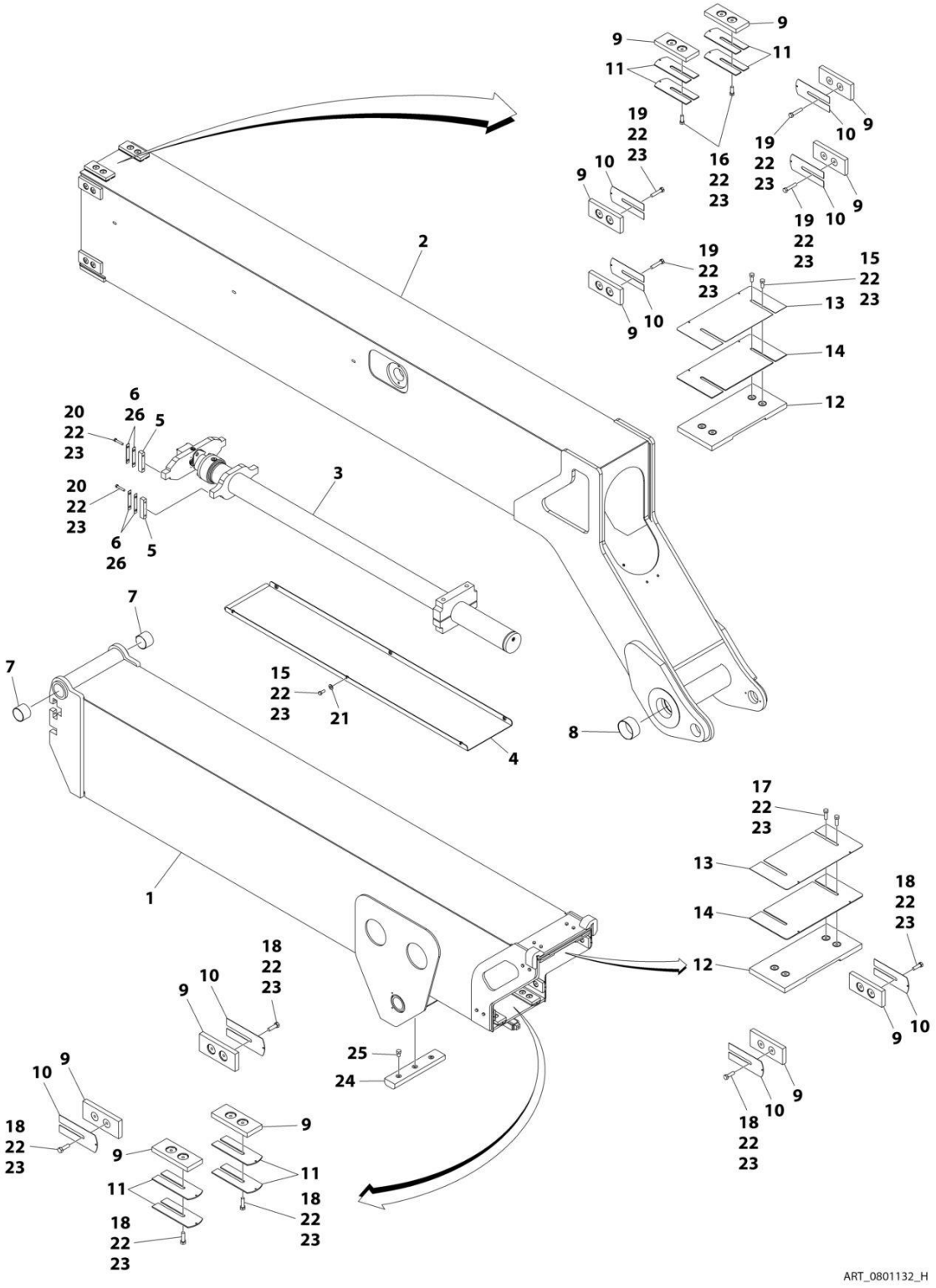

FIGURE 4-3. TOWER BOOM ASSEMBLY

ITEM	PART NUMBER	QTY	DESCRIPTION	REV
	0801132	Ref	TOWER BOOM ASSEMBLY	H
1	0801594	1	Base, Boom	
2	0801496	1	Fly, Boom	
3	1001228086	1	Tower Telecsope Cylinder Assembly (See Separate Breakdown in CYLINDER Section)	
4	4340706	1	Support	
5	0561185	4	Block, Attach	
6	4070929	4	Shim 1/16	
7	0962102	2	Bushing	
8	0962122	2	Bushing	
9	3340881	12	Pad, Wear	
10	4070897	8	Shim .05	
11	4070898	8	Shim .12	
12	3340828	2	Pad, Wear	
13	4070967	2	Shim .05	
14	4070968	2	Shim .12	
15	0641607	10	Bolt 3/8 x 7/8	
16	0641608	4	Bolt 3/8 x 1	
17	0641609	4	Bolt 3/8 x 1-1/8	
18	0641610	12	Bolt 3/8 x 1-1/4	
19	0641615	8	Bolt 3/8 x 1-7/8	
20	0641616	8	Bolt 3/8 x 2	
21	4711600	6	Washer 3/8	
22	0100011	AR	Compound, Locking	
23	0100038	AR	Primer, Locking	
24	3340835	1	Pad, Boom Rest	
25	0641806	3	Bolt 1/2 x 3/4	
26	4071007	4	Shim 20Ga	

FIGURE 4-4. JIB ASSEMBLY

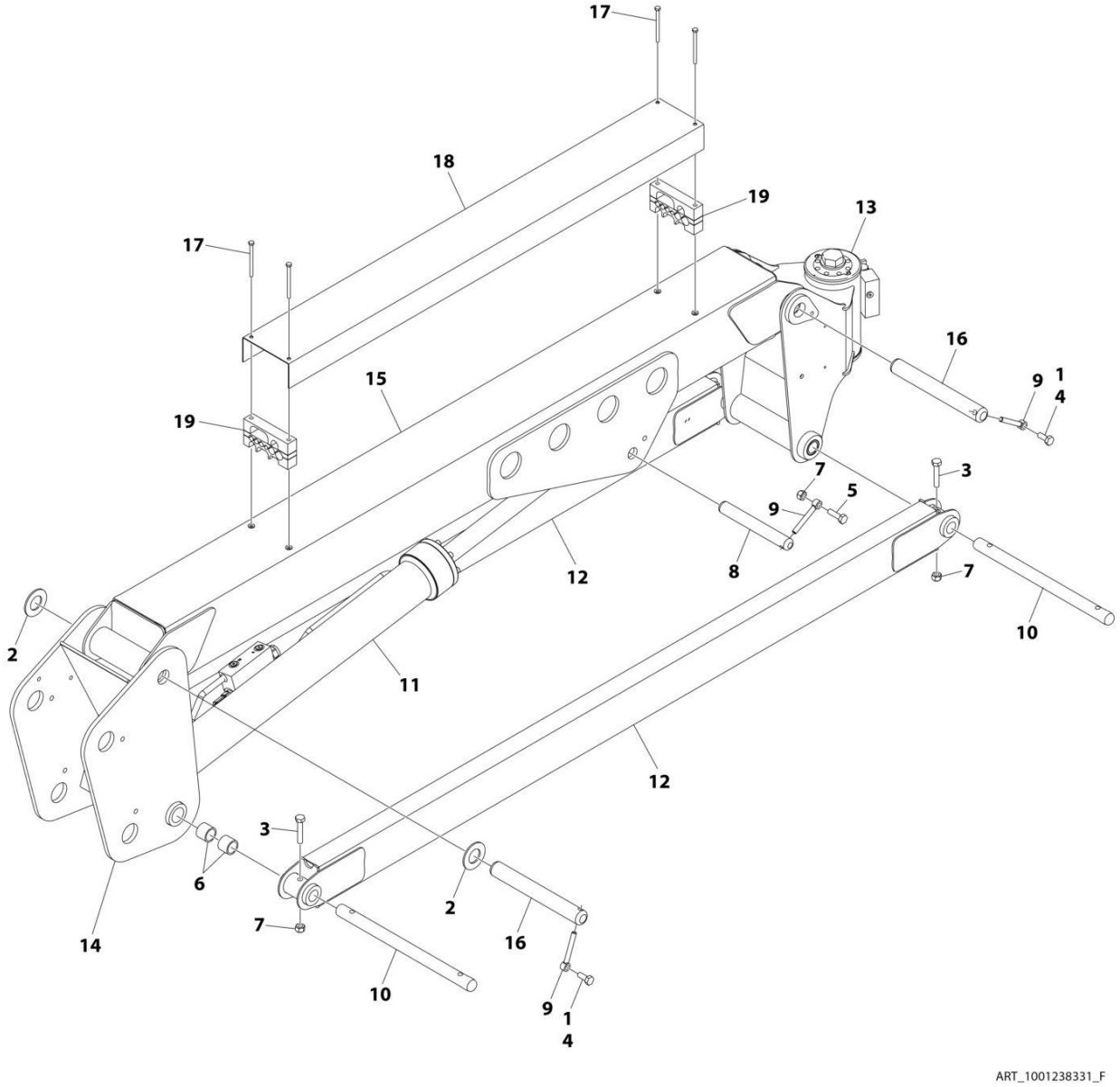

FIGURE 4-4. JIB ASSEMBLY

ITEM	PART NUMBER	QTY	DESCRIPTION	REV
	1001238331	Ref	JIB ASSEMBLY	F
1	0100011	AR	Compound, Locking	
2	0440237	2	Bearing	
3	0701020	4	Bolt M10 x 60	
4	0761012	2	Bolt M10 x 25	
5	0761015	1	Bolt M10 x 35	
6	1001134289	4	Bearing	
7	3291005	5	Nut M10	
8	3422867	1	Pin	
9	3841143	3	Keeper, Pin	
10	3422861	2	Pin	
11	1001264991	1	Cylinder Assembly - Jib (See Separate Breakdown in CYLINDER Section)	
12	4844817	2	Tube, Jib (Lower)	
13	1001234811	1	Rotator Assembly - Platform (See Separate Breakdown in this Section)	
14	1001238169	1	Pivot	
15	1001238333	1	Tube, Jib (Upper)	
16	1001238398	2	Pin	
17	0700624	4	Bolt M6 x 80	
18	1671034	1	Cover, JIB	
19	1001165350	2	Block, Clamp	

FIGURE 4-5. ROTATOR ASSEMBLY

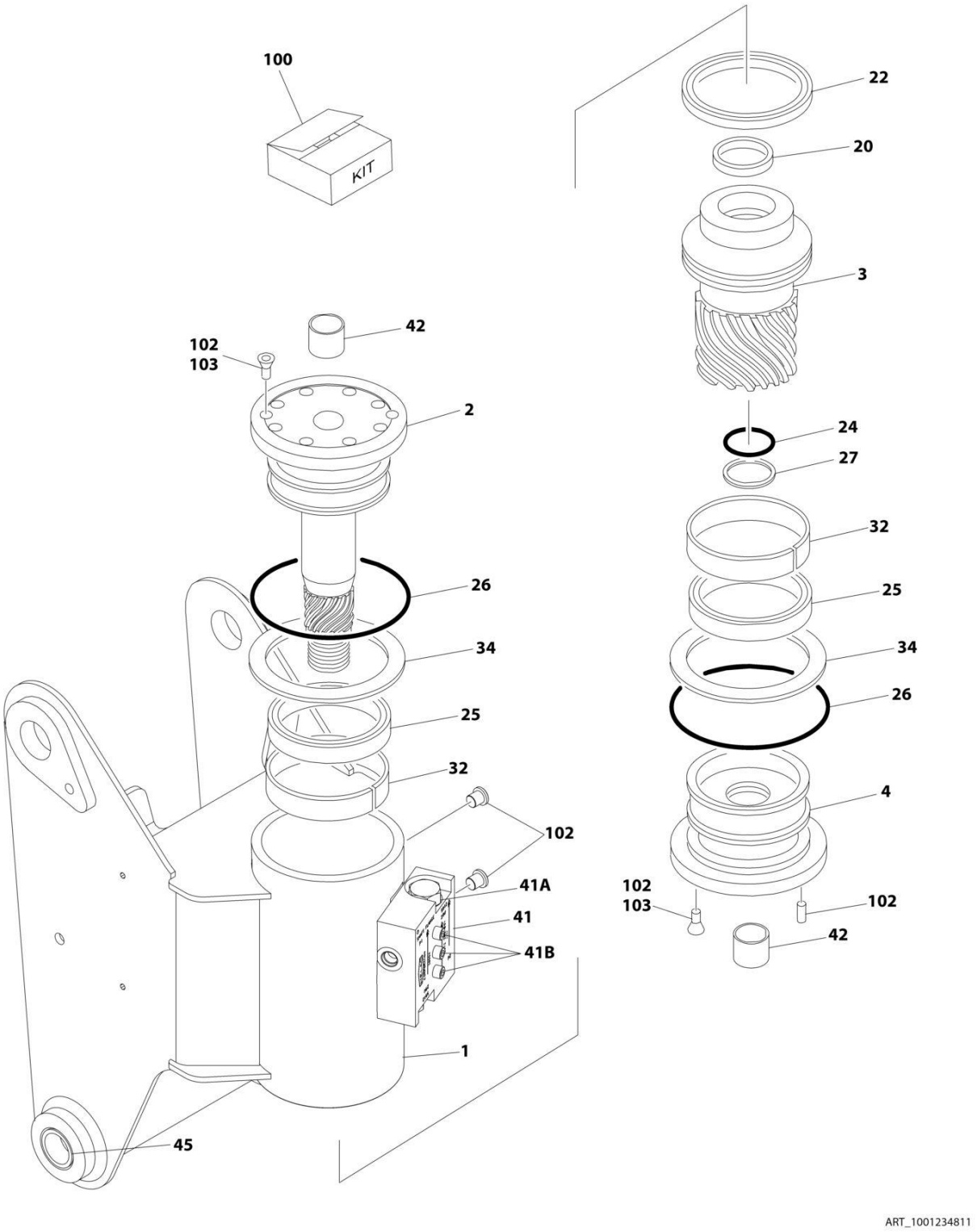

FIGURE 4-5. ROTATOR ASSEMBLY

ITEM	PART NUMBER	QTY	DESCRIPTION	REV
	1001234811	Ref	ROTATOR ASSEMBLY	B
1	See Note	NSS	Housing/Ring Gear Assembly (Note: Not Available - Purchase Complete Rotator Assembly)	
2	7017162	1	Shaft Weldment	
3	7017163	1	Piston/Sleeve Assembly	
4	7017164	1	Cap, End	
20	See Note	NSS	T-Seal (Note: Use Item 100)	
22	See Note	NSS	T-Seal (Note: Use Item 100)	
24	See Note	NSS	O-Ring (Note: Use Item 100)	
25	See Note	NSS	Seal (Note: Use Item 100)	
26	See Note	NSS	O-Ring (Note: Use Item 100)	
27	See Note	NSS	Ring, Back-up (Note: Use Item 100)	
32	See Note	NSS	Ring, Wear (Note: Use Item 101)	
34	See Note	NSS	Washer, Thrust (Note: Use Item 101)	
41	7017172	AR	Valve Assembly	
41A	7017192	2	Cartridge, Valve	
41A	See Note	NSS	Seal Kit - 7017192 Valve (Note: Not Available for Purchase)	
41B	See Note	3	Bolt 1/4-20NC x 1-1/2 Grade 8 (Note: Not Available - Purchase Locally)	
42	7017195	2	Bushing	
45	0961947	2	Bushing 1IN ID x 1.25IN OD x 5/8IN L	
45	1001134289	2	Bushing 1IN ID x 1.5IN OD x 1IN L	
100	70000342	1	Seal Kit (Includes Items 20, 22, 24, 25, 27 & 33)	
101	7017159	1	Bearing Kit (Includes Items 32 & 34)	
102	7017142	1	Hardware Kit	
103	70001697	4	Screw, Countersunk 1/4 x 3/8 Grade 8	

FIGURE 4-6. SUPPORT, PLATFORM INSTALLATION

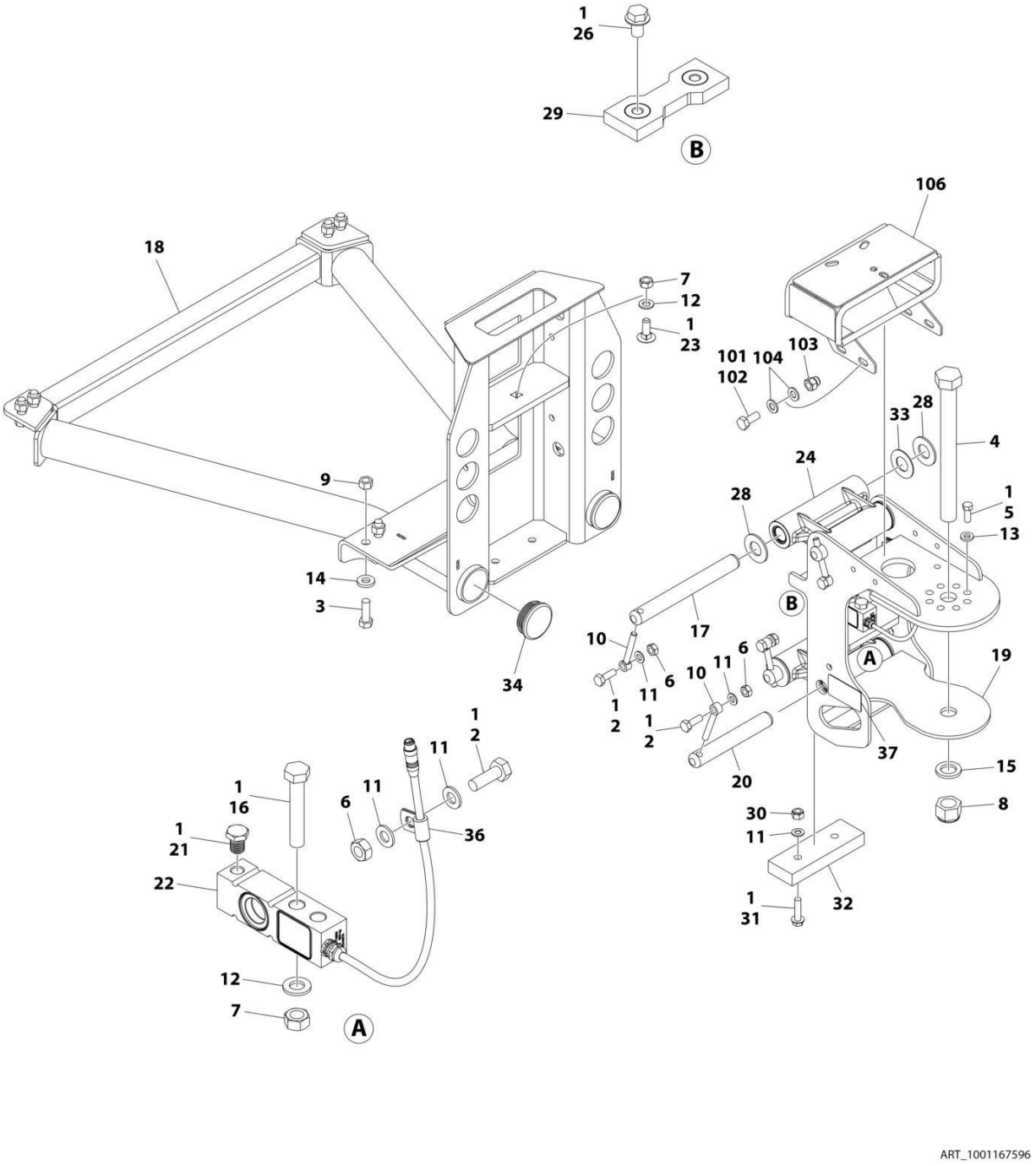

FIGURE 4-6. SUPPORT, PLATFORM INSTALLATION

ITEM	PART NUMBER	QTY	DESCRIPTION	REV
	1001167596	Ref	PLATFORM SUPPORT INSTALLATION	N
1	0100011	AR	Compound, Locking	
2	0761014	5	Bolt M10 x 30	
3	0761216	8	Bolt M12 x 40	
4	1001255133	1	Bolt 1 x 11	
5	0681608	8	Bolt 3/8 x 1	
6	3291001	5	Nut M10	
7	3291201	3	Nut M12	
8	1001174040	1	Nut 1	
9	3291205	8	Nut M12	
10	3841143	4	Keeper, Pin	
11	4812000	8	Washer M10	
12	4812100	3	Washer M12	
13	4891600	8	Washer 3/8	
14	5241200	8	Washer M12	
15	4892600001	1	Washer 1	
16	1001098828	2	Bolt M12 x 70 Grade 10.9	
17	1001167565	2	Pin	
18	1001200494	1	Support, Platform	
19	1001167567	1	Support, Rotator	
20	1001168402	2	Pin	
21	1001188622	1	Screw	
22	1001247468	1	Gauge, Load Sensing	
23	1001188844	1	Bolt M12 x 35	
24	1001201351	2	Link	
26	5251008	2	Bolt M10 x 16	
28	1001189002	8	Bearing	
29	1001190985	1	Pad, Wear	
30	3291005	2	Nut M10	
31	5251016	2	Bolt M10 x 40	
32	1001200491	1	Pad, Wear	
33	1001189001	4	Bearing	
34	1001204725	2	Plug	
36	91203039	1	Clamp	
37	1001216630	2	Decal - Tie Down/No Lift	
38	1001238421	Ref	Kit, Platform Leveling (Not Shown)	
	1001202687	Ref	VALVE MOUNT INSTALLATION	B
101	0100011	AR	Compound, Locking	
102	0760810	4	Bolt M8 x 20	
103	3290806	4	Nut M8	
104	4811900	8	Washer M8	
106	1001208994	1	Mount, Valve	

FIGURE 4-7. POWER TRACK INSTALLATION - MAIN BOOM

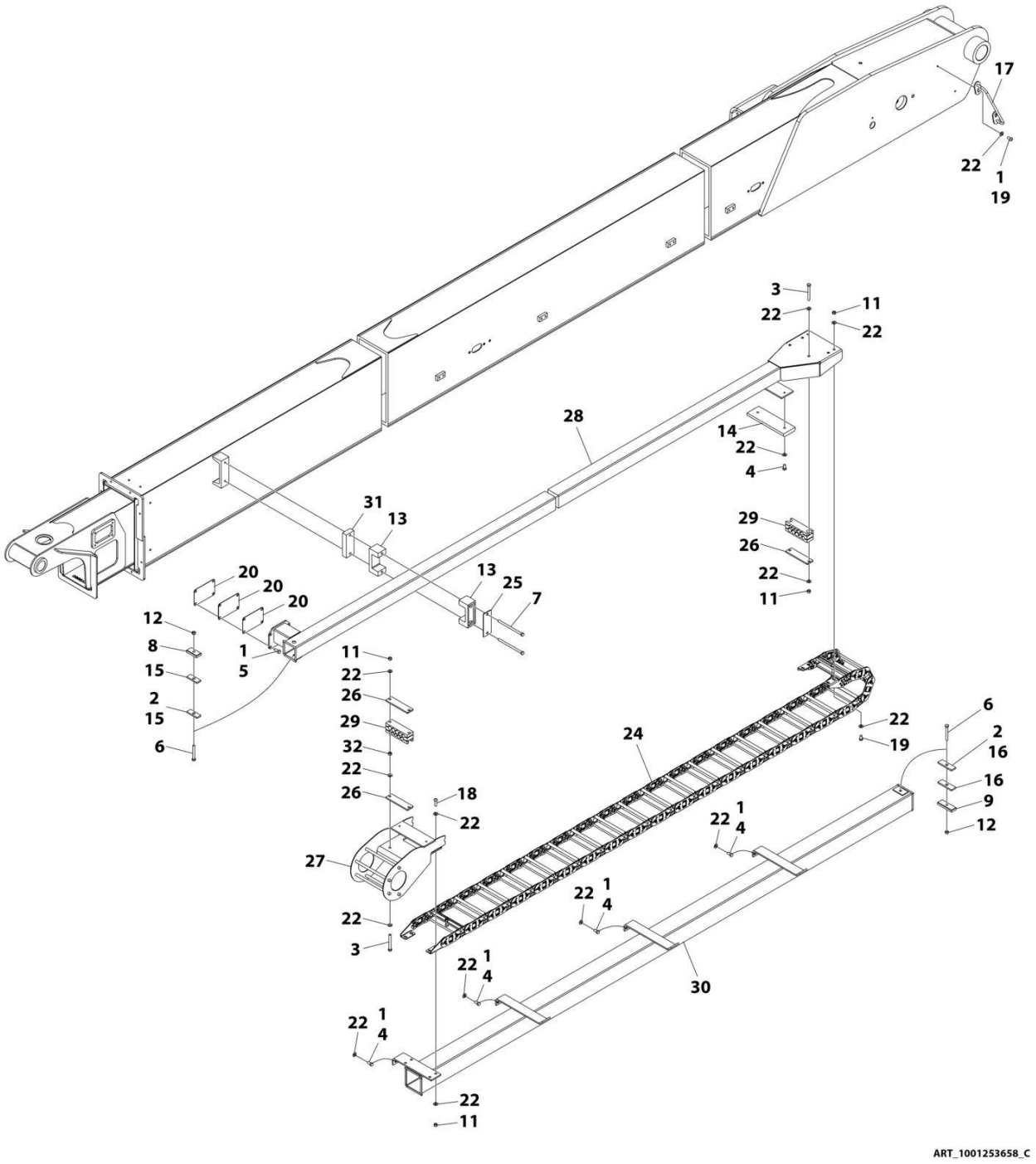

FIGURE 4-7. POWER TRACK INSTALLATION - MAIN BOOM

ITEM	PART NUMBER	QTY	DESCRIPTION	REV
	1001253658	Ref	POWER TRACK INSTALLATION	C
1	0100011	AR	Compound, Locking	
2	0100081	AR	Adhesive	
3	0630593	4	Bolt 3/8 x 3-1/4	
4	0641606	10	Bolt 3/8 x 3/4	
5	0641607	4	Bolt 3/8 x 7/8	
6	0641624	2	Bolt 3/8 x 3	
7	0641648	2	Bolt 3/8 x 6	
8	1320288	1	Clamp	
9	1320289	1	Clamp	
11	3271605	12	Nut	
12	3311605	2	Nut 3/8	
13	3340764	2	Pad	
14	3340840	1	Pad	
15	3340941	2	Pad	
16	3340943	2	Pad, Rubber	
17	3841406	1	Loop, Hose	
18	3900232	4	Screw 3/8 x 1-1/4	
19	3900283	6	Screw 3/8 x 3/4	
20	4070969	3	Shim 16 Gauge	
22	4711600	38	Washer 3/8	
24	1001099837	1	Power Track Assembly	
24	70002013	1	Repair Section	
24	70002014	1	Mounting Kit	
25	1001136400	1	Plate. Backing	
26	1001249824	3	Plate	
27	1001250384	1	Mount	
28	1001253724	1	Push Tube	
29	1001253880	2	Clamp, Hose	
30	1001254317	1	Tube	
31	1001254632	1	Spacer	
32	3271601	1	Nut 3/8	

FIGURE 4-8. POWER TRACK INSTALLATION - TOWER BOOM

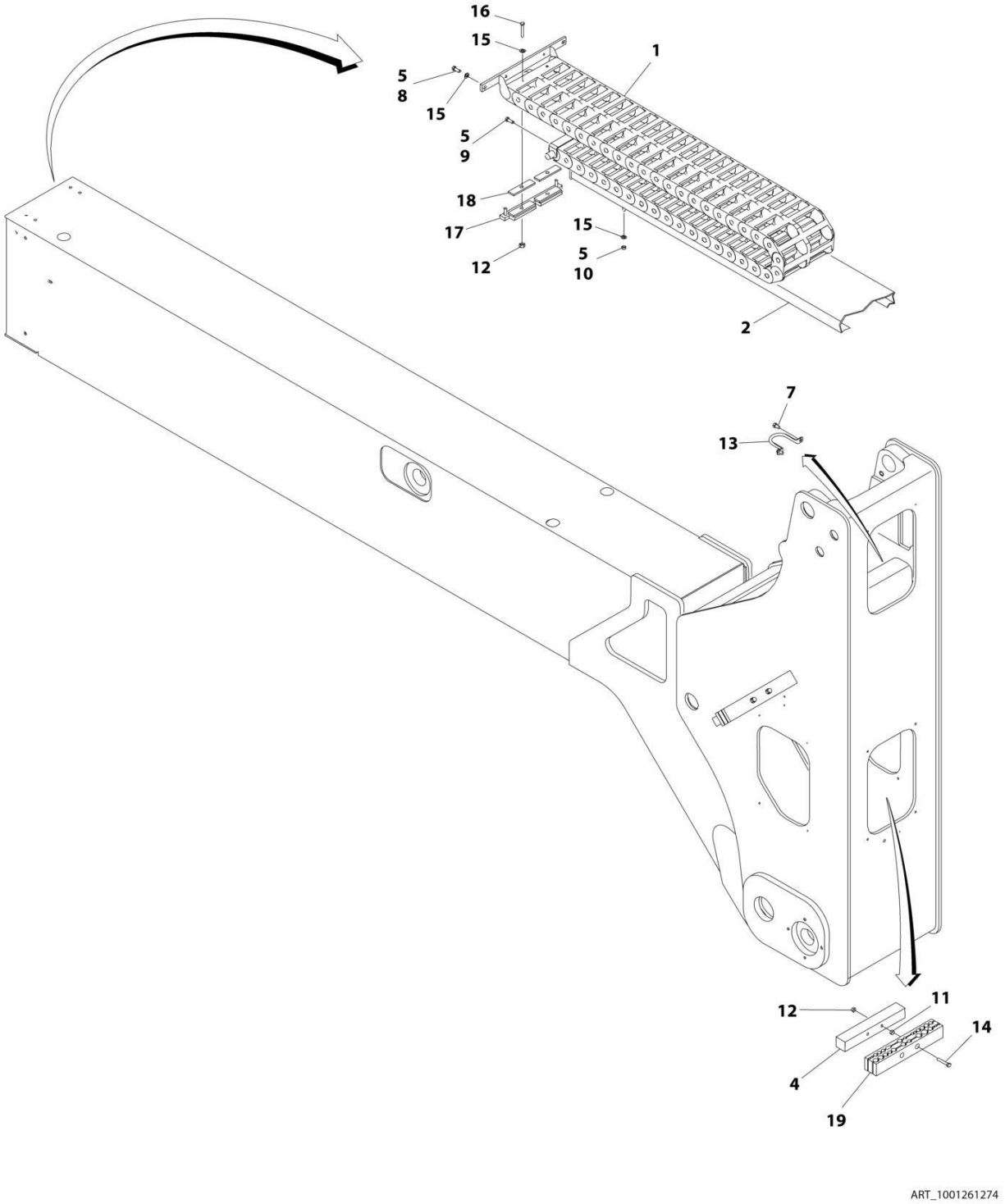

FIGURE 4-8. POWER TRACK INSTALLATION - TOWER BOOM

ITEM	PART NUMBER	QTY	DESCRIPTION	REV
	1001261274	Ref	POWER TRACK INSTALLATION	B
1	1180346	1	Track, Power	
1	7020064	1	Bracket, End (Moving)	
1	7020065	1	Bracket, End (Fixed)	
1	7020066	1	Section, Repair	
1	7020067	1	Link, Repair	
2	4845680	1	Tube, Hose	
4	1320250	2	Bar	
5	0100011	AR	Compound, Locking	
7	0641605	2	Bolt 3/8 x 5/8	
8	0641606	2	Bolt 3/8 x 3/4	
9	0641622	2	Bolt 3/8 x 2-3/4	
10	3311601	4	Nut 3/8	
11	3311602	4	Nut 3/8	
12	3311605	6	Nut 3/8	
13	3841340	1	Rod, Hose Loop	
14	3900262	4	Bolt 3/8 x 4-3/4	
15	4711600	8	Washer 3/8	
16	0641624	2	Bolt 3/8 x 3	
17	0259420	1	Clamp	
18	3340859	2	Pad	
19	1001261272	2	Clamp, Block	

FIGURE 4-9. CONTROL VALVES INSTALLATION - WITH 2WS

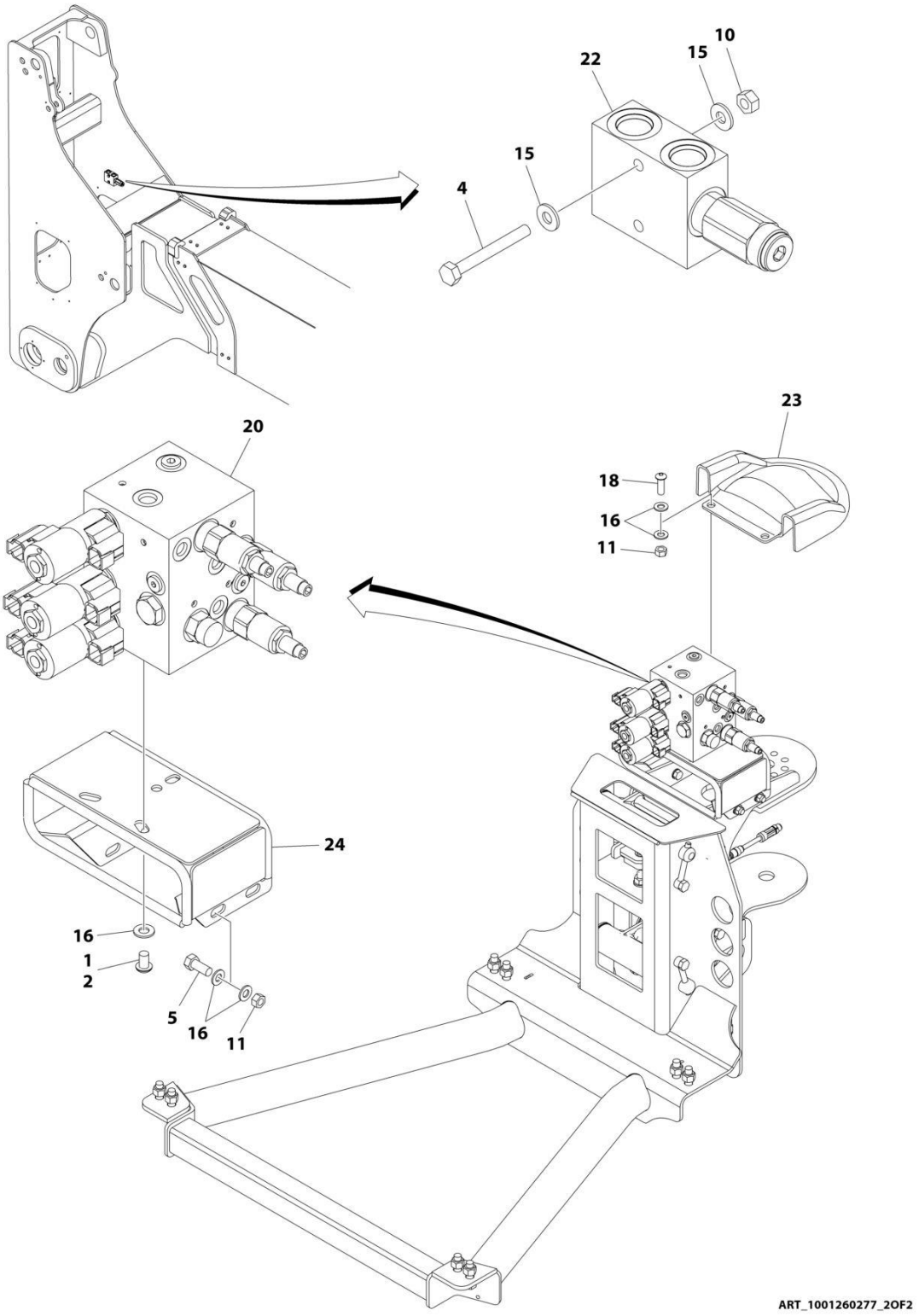

FIGURE 4-9. CONTROL VALVES INSTALLATION - WITH 2WS

ITEM	PART NUMBER	QTY	DESCRIPTION	REV
	1001260277	Ref	BOOM VALVES INSTALLATION	A
1	0100011	AR	Compound, Locking	
2	0630467	3	Screw 5/16 x 1/2	
4	0641418	4	Bolt 1/4 x 2-1/4	
5	0641507	4	Bolt 5/16 x 7/8	
10	3311405	2	Nut 1/4	
11	3311505	6	Nut 5/16	
15	4711400	11	Washer 1/4	
16	4711500	15	Washer 5/16	
18	88261024	2	Capscrew 5/16 x 1	
20	1001253677	1	Boom Valve Assembly (See Separate Breakdown in this Section)	
22	1001200054	1	Valve Assembly (Relief)	
22	7012970	1	Cartridge, Valve	
22	7012953	1	Seal Kit - 7012970 Valve	
23	1001207969	1	Cover	
24	1001208994	1	Mount	

FIGURE 4-10. CONTROL VALVE ASSEMBLY

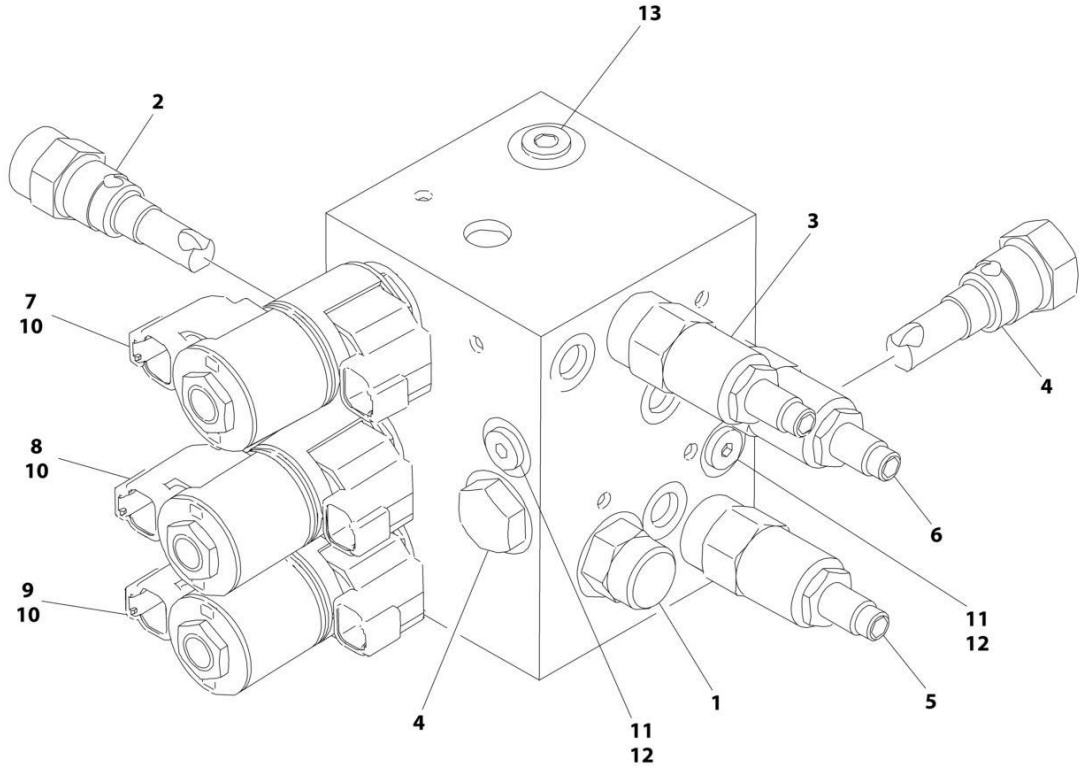

ART_1001253677

FIGURE 4-10. CONTROL VALVE ASSEMBLY

ITEM	PART NUMBER	QTY	DESCRIPTION	REV
	1001253677	Ref	BOOM VALVE ASSEMBLY	B
1	7012989	1	Valve, Flow	
1	7012953	1	Seal Kit - 7012989 Valve	
2	7012965	1	Valve, Flow	
2	7012953	1	Seal Kit - 7012965 Valve	
3	70004151	1	Valve, Relief	
3	7021653	1	Seal Kit - 70003962 Valve	
4	7012914	2	Valve, Cartridge	
4	7012918	2	Seal Kit - 7012914 Valve	
5	7023911	1	Valve, Relief	
5	7012967	1	Seal Kit - 7023911 Valve	
6	70007446	1	Valve, Relief	
6	7012998	1	Seal Kit - 70007446 Valve	
7	7017452	1	Valve, Solenoid (Jib)	
7	7017402	2	Seal Kit - 7017452 Valve	
8	7017452	1	Valve, Solenoid (Platform Level)	
8	7017402	1	Seal Kit - 7017452 Valve	
9	7017452	1	Valve, Solenoid (Rotator)	
9	7017402	2	Seal Kit - 7017452 Valve	
10	70002386	6	Coil	
11	70002064	2	Plug, Orifice	
12	2220883	2	Plug	
13	91164079	1	Plug	

FIGURE 4-11. BOOM VALVES AND PROXIMITY SWITCHES INSTALLATION

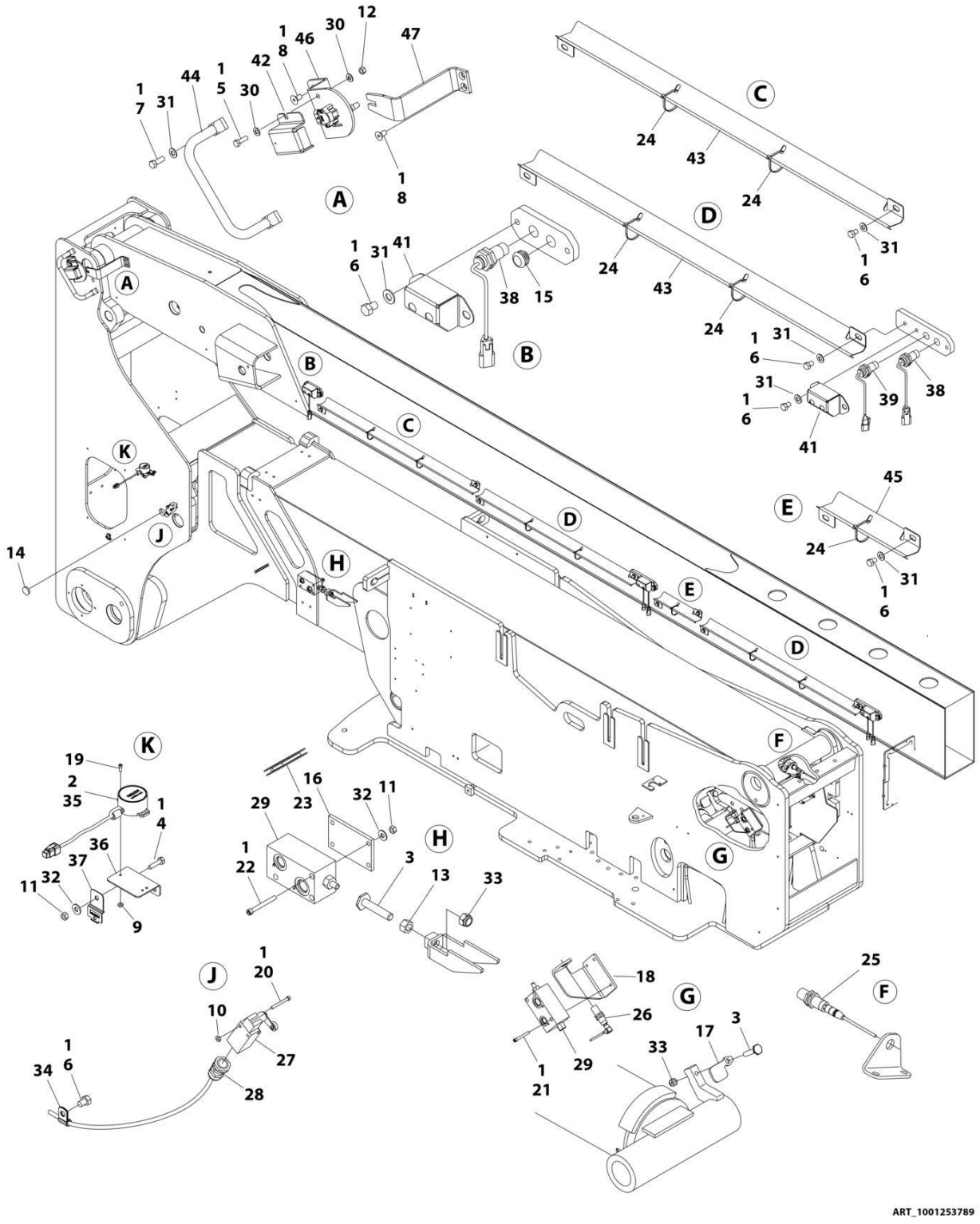

FIGURE 4-11. BOOM VALVES AND PROXIMITY SWITCHES INSTALLATION

ITEM	PART NUMBER	QTY	DESCRIPTION	REV
	1001253789	Ref	BOOM VALVE AND LIMIT SWITCHES INSTALLATION	D
1	0100011	AR	Compound, Locking	
2	0100048	AR	Grease	
3	0630427	2	Bolt	
4	0641408	2	Capscrew 1/4 x 1	
5	0641508	1	Capscrew 5/16 x 1	
6	0641604	15	Bolt 3/8 x 1/2	
7	0641608	2	Bolt 3/8 x 1	
8	0741606	4	Bolt 3/8 x 3/4	
9	3310605	3	Nut 6	
10	3310801	2	Nut #8	
11	3311405	AR	Nut 1/4	
12	3311501	1	Nut 5/16	
13	3311801	1	Nut 1/2	
14	3520035	1	Plug	
15	3520193	1	Plug	
16	3570928	1	Plate, Spacer	
17	3572606	1	Plate, Switch Target	
18	3572607	1	Plate, Switch Mount	
19	3930606	3	Capscrew #6 x 3/8	
20	3930824	2	Capscrew #8 x 1-1/2	
21	3931432	3	Capscrew 1/4 x 2	
22	3931436	3	Capscrew 1/4 x 2-1/4	
23	4060805	7 in/25cm	Trim	
24	4240033	7	Tie, Cable	
25	4360498	1	Switch, Proximity	
26	4360499	1	Switch, Proximity	
27	4360578	1	Switch, Limit	
28	4460968	1	Connector, Strain Relief	
29	4641435	2	Valve, Switch	
29	7011342	1	Valve, Check	
29	7011333	1	Seal Kit - 7011342 Valve	
30	4711500	2	Washer 5/16	
31	4711600	16	Washer 3/8	
32	4751400	AR	Washer 1/4	
33	88521008	2	Nut 1/2	
34	91203039	1	Clamp	
35	1001094400	1	Sensor, Dual Axis	
36	1001096736	1	Bracket, Tilt Sensor	
37	1001153749	1	Clip	
38	1001170847	3	Sensor, Proximity	
39	1001182570	2	Sensor, Proximity	
40	1001200497	1	Connector (Not Shown)	
41	1001204715	3	Bracket	
42	1001211588	1	Shield, Angle Sensor	
43	1001247453	3	Angle, Cable	
44	1001263612	1	Bar, Guard	
45	1001250531	1	Plate, Cable Cover	
46	1001255880	1	Sensor, Boom Angle	
46	1001204939	1	Sensor, Angle	

ITEM	PART NUMBER	QTY	DESCRIPTION	REV
46	3930820	2	Capscrew #8x1-1/4 (Sensor Screw)	
46	1001211582	1	Arm/Link	
46	4010303	1	Screw M3x6 (Arm Screw)	
47	1001255882	1	Plate, Sensor	

FIGURE 4-12. BOOM VALVES AND PROXIMITY SWITCHES INSTALLATION WITH TOWER STOW

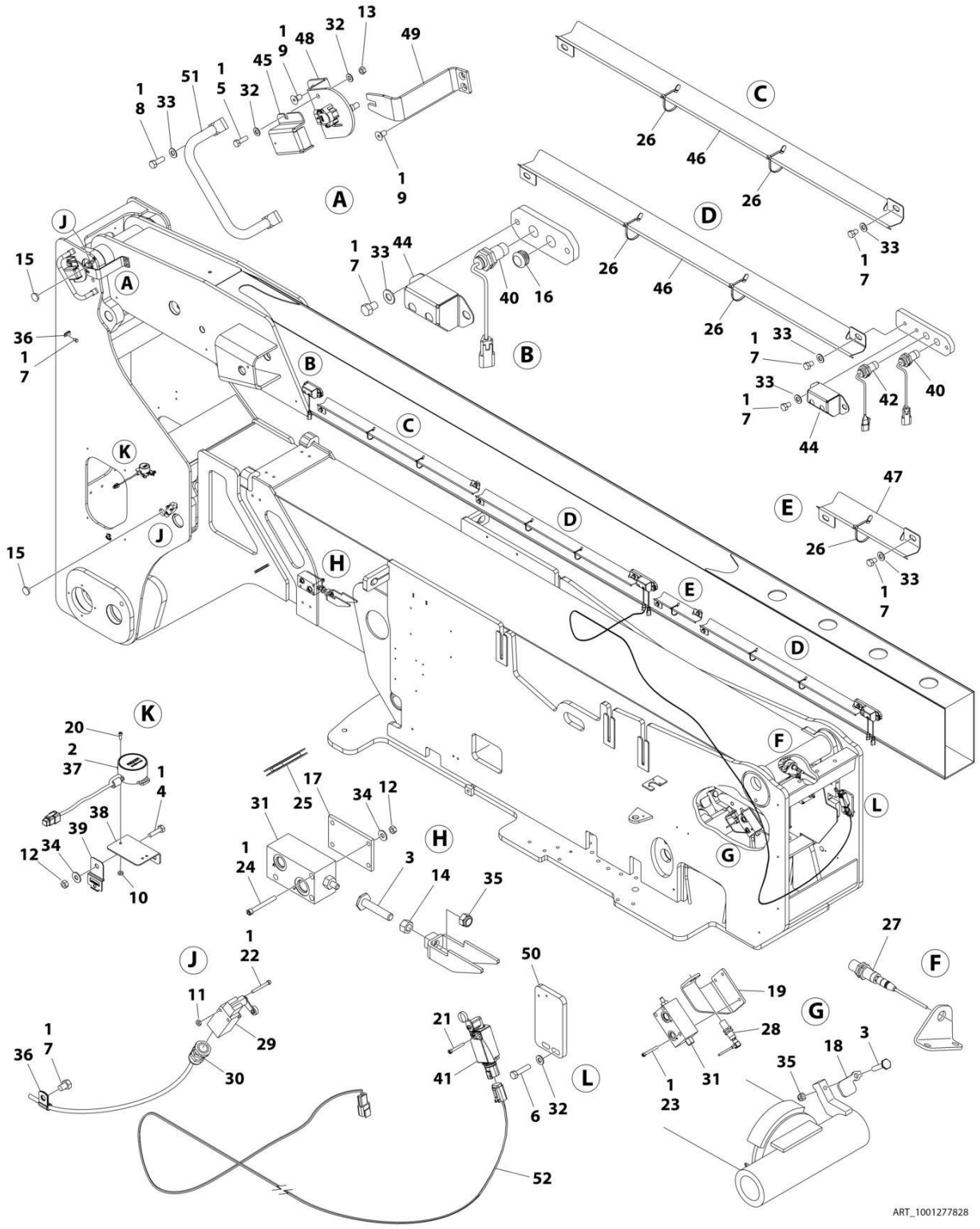

FIGURE 4-12. BOOM VALVES AND PROXIMITY SWITCHES INSTALLATION WITH TOWER STOW

ITEM	PART NUMBER	QTY	DESCRIPTION	REV
	1001277828	Ref	BOOM VALVE AND LIMIT SWITCHES INSTALLATION	A
1	0100011	AR	Compound, Locking	
2	0100048	AR	Grease	
3	0630427	2	Bolt	
4	0641408	2	Capscrew 1/4 x 1	
5	0641508	1	Capscrew 5/16 x 1	
6	0641511	2	Bolt 5/16 x 1-3/8	
7	0641604	16	Bolt 3/8 x 1/2	
8	0641608	2	Bolt 3/8 x 1	
9	0741606	4	Bolt 3/8 x 3/4	
10	3310605	3	Nut 6	
11	3310801	4	Nut #8	
12	3311405	5	Nut 1/4	
13	3311501	1	Nut 5/16	
14	3311801	1	Nut 1/2	
15	3520035	2	Plug	
16	3520193	1	Plug	
17	3570928	1	Plate, Spacer	
18	3572606	1	Plate, Switch Target	
19	3572607	1	Plate, Switch Mount	
20	3930606	3	Capscrew #6 x 3/8	
21	3930820	2	Capscrew #8 x 1-1/4 (Sensor Screw)	
22	3930824	4	Capscrew #8 x 1-1/2	
23	3931432	3	Capscrew 1/4 x 2	
24	3931436	3	Capscrew 1/4 x 2-1/4	
25	4060805	7 in/25cm	Trim	
26	4240033	7	Tie, Cable	
27	4360498	1	Switch, Proximity	
28	4360499	1	Switch, Proximity	
29	4360578	2	Switch, Limit	
30	4460968	2	Connector, Strain Relief	
31	4641435	2	Valve, Switch	
31	7011342	1	Valve, Check	
31	7011333	1	Seal Kit - 7011342 Valve	
32	4711500	4	Washer 5/16	
33	4711600	16	Washer 3/8	
34	4751400	5	Washer 1/4	
35	88521008	2	Nut 1/2	
36	91203039	2	Clamp	
37	1001094400	1	Sensor, Dual Axis	
38	1001096736	1	Bracket, Tilt Sensor	
39	1001153749	1	Clip	
40	1001170847	3	Sensor, Proximity	
41	1001172271	1	Switch, Limit	
42	1001182570	2	Sensor, Proximity	
43	1001200497	1	Connector (Not Shown)	
44	1001204715	3	Bracket	
45	1001211588	1	Shield, Angle Sensor	
46	1001247453	3	Angle, Cable	
47	1001250531	1	Plate, Cable Cover	

ITEM	PART NUMBER	QTY	DESCRIPTION	REV
48	1001255880	1	Sensor, Boom Angle	
48	1001204939	1	Sensor, Angle	
48	3930820	2	Capscrew #8x1-1/4 (Sensor Screw)	
48	1001211582	1	Arm/Link	
48	4010303	1	Screw M3x6 (Arm Screw)	
49	1001255882	1	Plate, Sensor	
50	1001260475	1	Bracket	
51	1001263612	1	Bar, Guard	
52	1001266829	1	Harness, Tower Stow (See Separate Breakdown in ELECTRICAL Section)	

SECTION 5 - PLATFORM

FIGURE 5-1. PLATFORM ASSEMBLY WITH DROP-BAR - 30IN X 3FT (76CM X 1M)

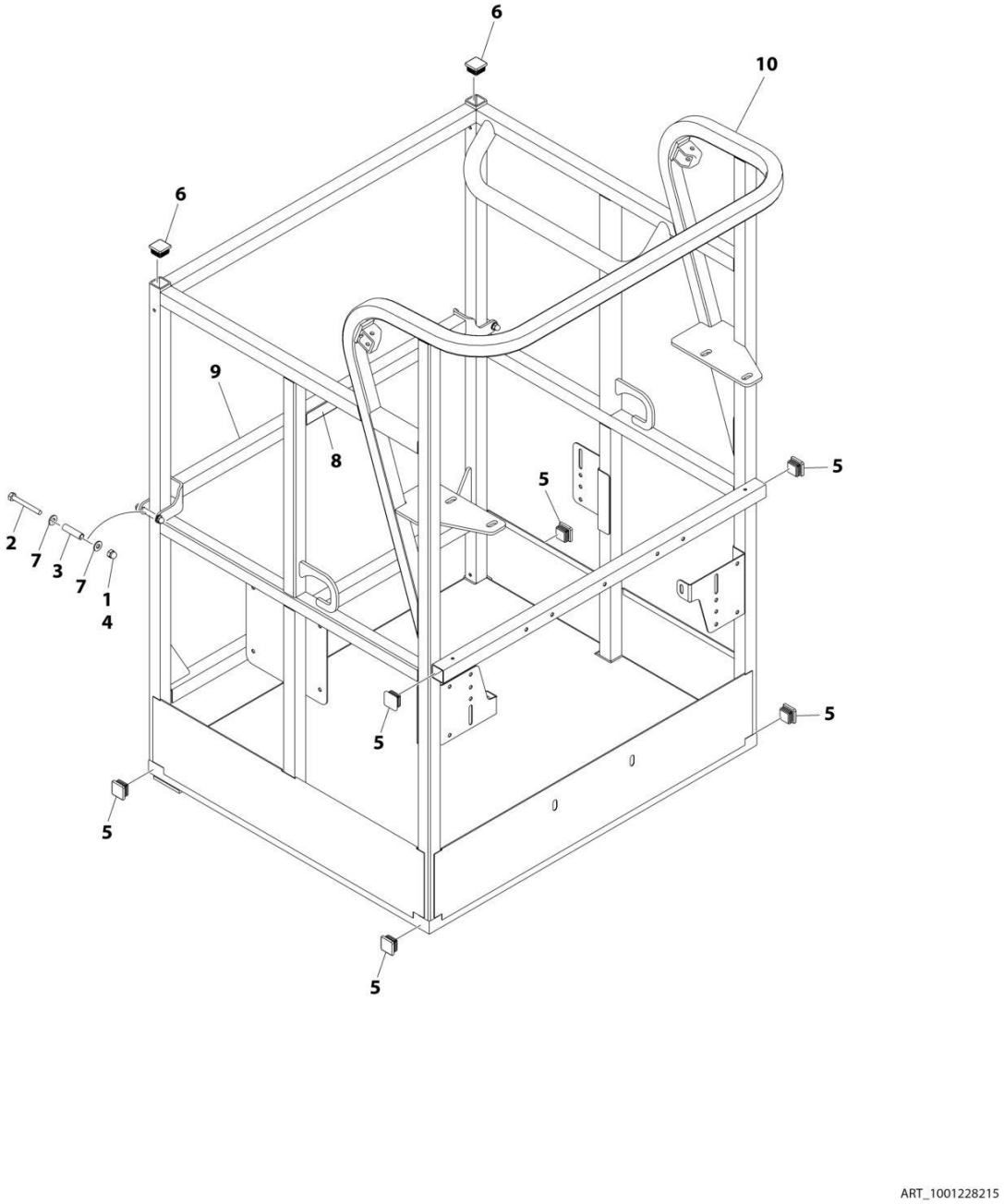

FIGURE 5-1. PLATFORM ASSEMBLY WITH DROP-BAR - 30IN X 3FT (76CM X 1M)

ITEM	PART NUMBER	QTY	DESCRIPTION	REV
	1001228215	Ref	PLATFORM ASSEMBLY	A
	See Note	Ref	Note: Platform and Mesh must be ordered separately for Platforms with Mesh. See SPECIAL OPTIONS SECTION for Mesh Installations.	
	See Note	Ref	Note: Replacement Decals Must be Ordered Separately - See DECAL SECTION.	
1	0100011	AR	Compound, Locking	
2	0641418	2	Bolt 1/4 x 2-1/4	
3	0961845	2	Bushing	
4	3300151	2	Nut 1/4	
5	3520072	6	Cap, Plug	
6	3520198	2	Cap, Plug	
7	4711400	4	Washer 1/4	
8	1001140429	1	Decal - Drop Bar	
9	1001226872	1	Bar, Drop	
10	See Note	NSS	Platform (Note: Not Available - Purchase Platform Assembly)	

FIGURE 5-2. PLATFORM ASSEMBLY WITH GATE - 30IN X 4FT (76CM X 1.22M)

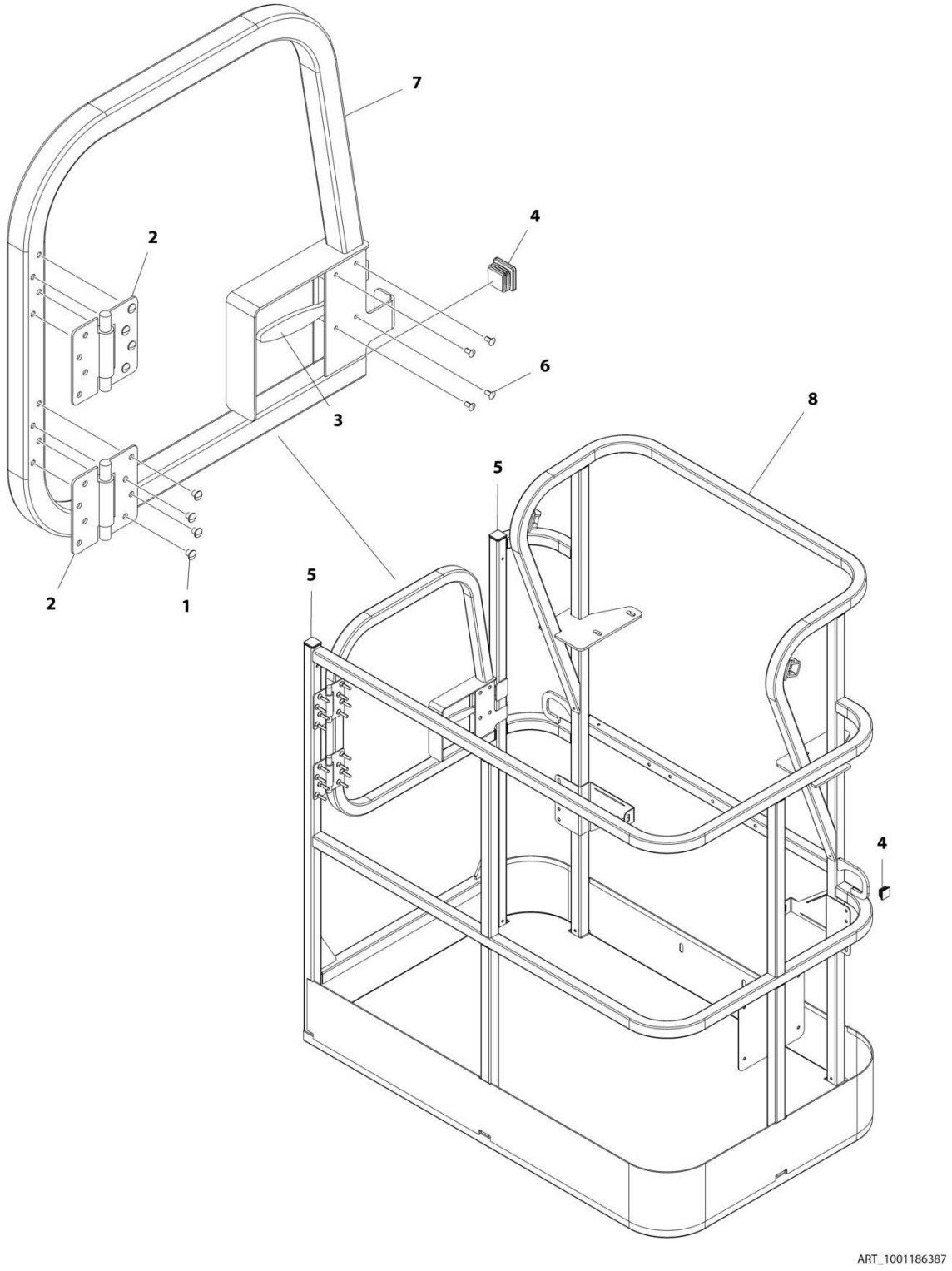

FIGURE 5-2. PLATFORM ASSEMBLY WITH GATE - 30IN X 4FT (76CM X 1.22M)

ITEM	PART NUMBER	QTY	DESCRIPTION	REV
	1001186387	Ref	PLATFORM ASSEMBLY	C
		Ref	Note: Platform and Mesh must be ordered separately for Platforms with Mesh. See SPECIAL OPTIONS SECTION for Mesh Installations.	
		Ref	Note: Replacement Decals Must be Ordered Separately - See DECALS SECTION.	
1	2080040	16	Fastener, Huck	
2	2600281	2	Hinge, Self-Closing	
3	2940074	1	Latch	
4	3520072	3	Plug	
5	3520198	2	Plug	
6	3820020	4	Rivet	
7	1001144629	1	Gate	
8	See Note	1	Platform (Note: Not Available - Purchase Platform Assembly)	

FIGURE 5-3. PLATFORM ASSEMBLY WITH DROP-BAR - 30IN X 4FT (76CM X 1.22M)

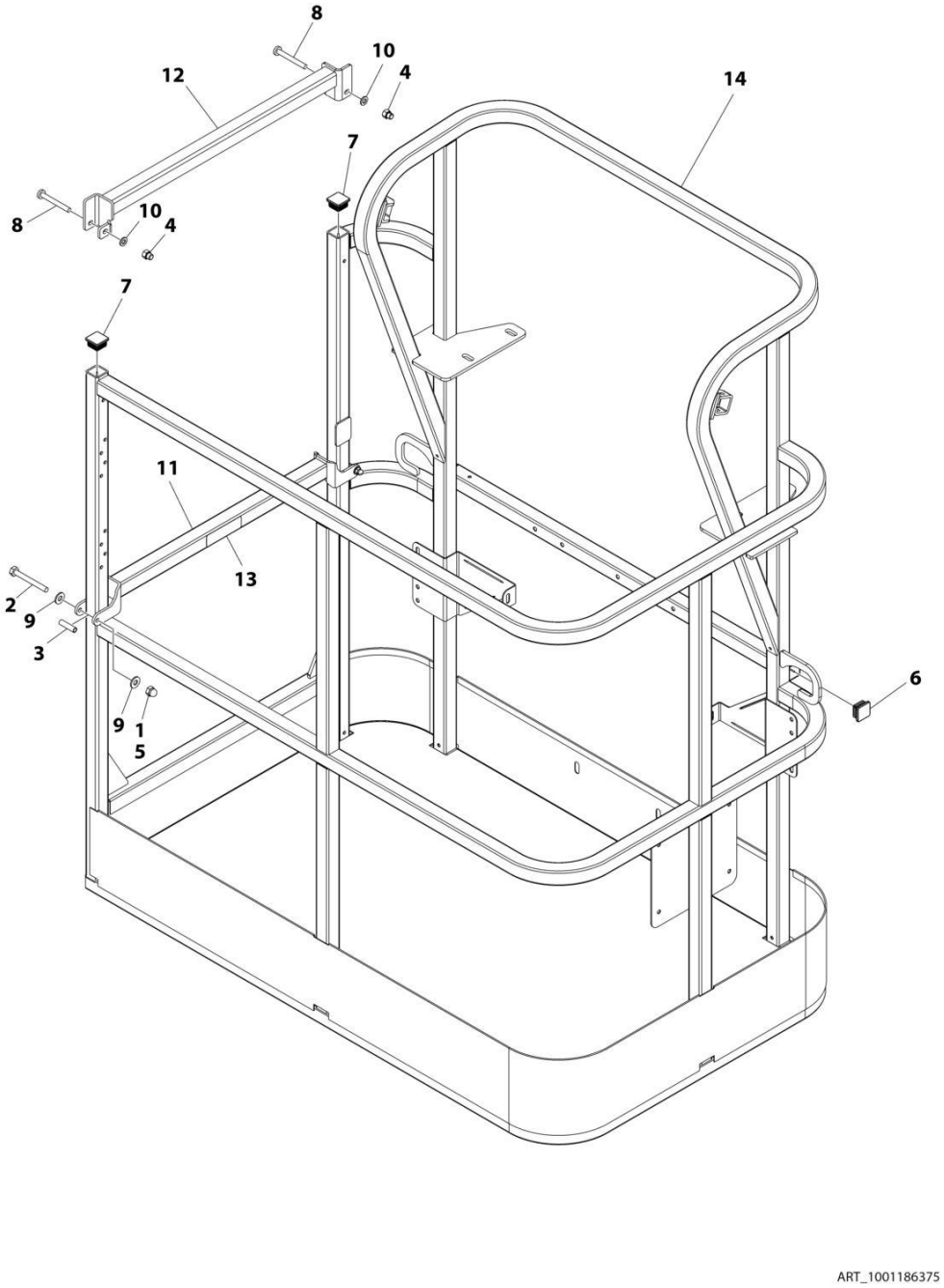

FIGURE 5-3. PLATFORM ASSEMBLY WITH DROP-BAR - 30IN X 4FT (76CM X 1.22M)

ITEM	PART NUMBER	QTY	DESCRIPTION	REV
	1001186375	Ref	PLATFORM ASSEMBLY	B
		Ref	Note: Platform and Mesh must be ordered separately for Platforms with Mesh. See SPECIAL OPTIONS SECTION for Mesh Installations.	
		Ref	Note: Replacement Decals Must be Ordered Separately - See DECALS SECTION.	
1	0100011	AR	Compound, Locking	
2	0641418	2	Bolt 1/4 x 2-1/4	
3	0961845	2	Bushing	
4	3290606	2	Nut M6	
5	3300151	2	Nut 1/4	
6	3520072	2	Plug	
7	3520198	2	Plug	
8	4010618	2	Screw M6 x 50	
9	4711400	4	Washer 1/4	
10	4811700	2	Washer M6	
11	1001138494	1	Bar, Drop	
12	1001138514	1	Rail - Top	
13	1001140429	1	Decal - Drop Bar	
14	See Note	1	Platform (Note: Not Available - Purchase Platform Assembly)	

FIGURE 5-4. PLATFORM ASSEMBLY WITH GATE - 30IN X 6FT (76CM X 1.83M)

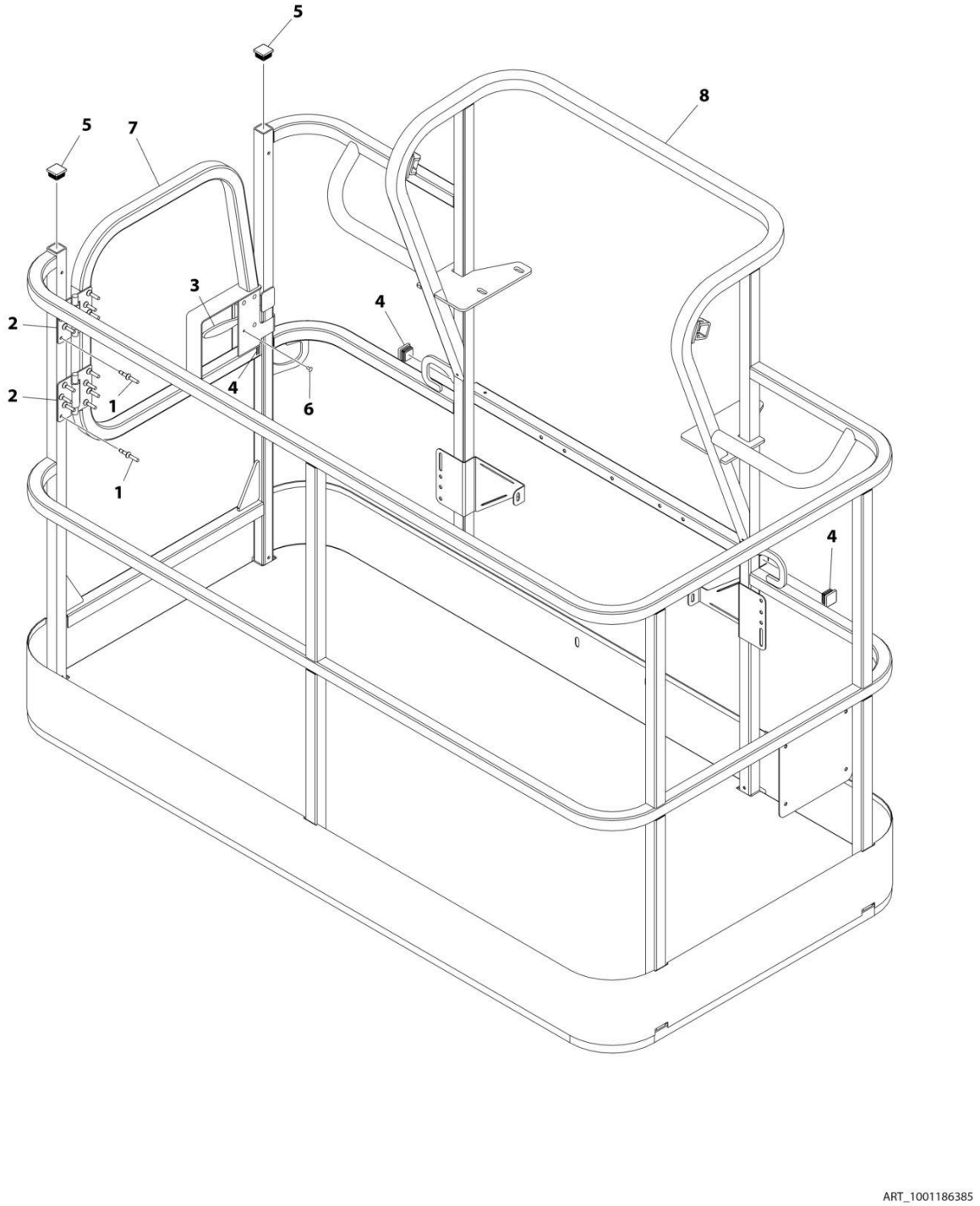

FIGURE 5-4. PLATFORM ASSEMBLY WITH GATE - 30IN X 6FT (76CM X 1.83M)

ITEM	PART NUMBER	QTY	DESCRIPTION	REV
	1001186385	Ref	PLATFORM ASSEMBLY	D
		Ref	Note: Platform and Mesh must be ordered separately for Platforms with Mesh. See SPECIAL OPTIONS SECTION for Mesh Installations.	
		Ref	Note: Replacement Decals Must be Ordered Separately - See DECALS SECTION.	
1	2080040	16	Fastener, Huck	
2	2600281	2	Hinge	
3	2940074	1	Latch	
4	3520072	3	Plug	
5	3520198	2	Plug	
6	3820020	4	Rivet	
7	1001144629	1	Gate	
8	See Note	NSS	Platform (Note: Not Available - Purchase Platform Assembly)	

FIGURE 5-5. PLATFORM ASSEMBLY WITH GATE- 36IN X 6FT (91.5CM X 1.83M)

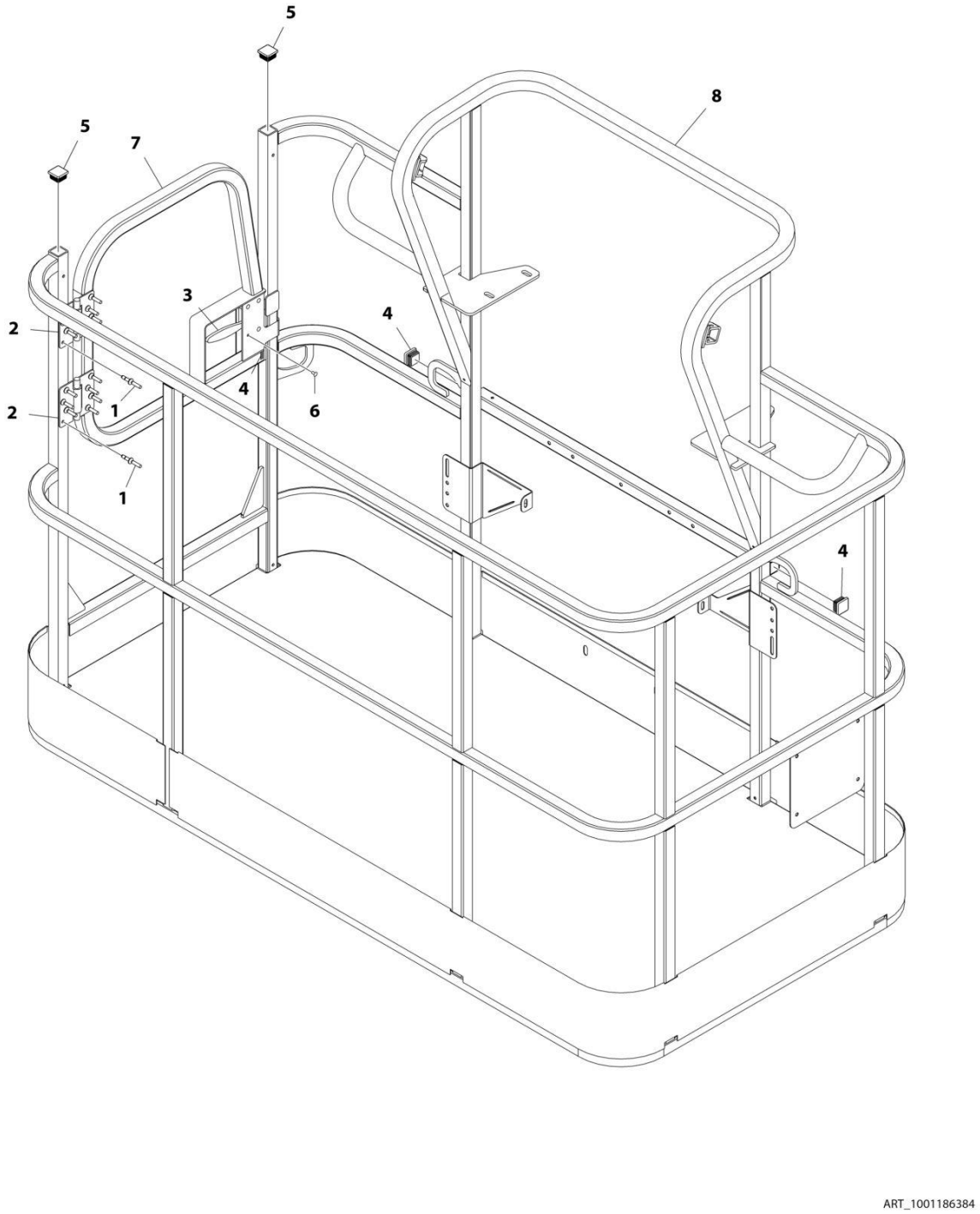

FIGURE 5-5. PLATFORM ASSEMBLY WITH GATE- 36IN X 6FT (91.5CM X 1.83M)

ITEM	PART NUMBER	QTY	DESCRIPTION	REV
	1001186384	Ref	PLATFORM ASSEMBLY - 36IN X 6FT (91.5CM X 1.83M) WITH SWING GATE	C
	See Note	Ref	Note: Platform and Mesh must be ordered separately for Platforms with Mesh. See SPECIAL OPTIONS SECTION for Mesh Installations.	
	See Note	Ref	Note: Replacement Decals Must be Ordered Separately - See DECALS SECTION.	
1	2080040	16	Fastener, Huck	
2	2600281	2	Hinge	
3	2940074	1	Latch	
4	3520072	3	Plug	
5	3520198	2	Plug	
6	3820020	4	Rivet	
7	1001144629	1	Gate	
8	See Note	NSS	Platform (Note: Not Available - Purchase Platform Assembly)	

FIGURE 5-6. PLATFORM ASSEMBLY WITH DROP-BAR - 30IN X 6FT (76CM X 1.83M)

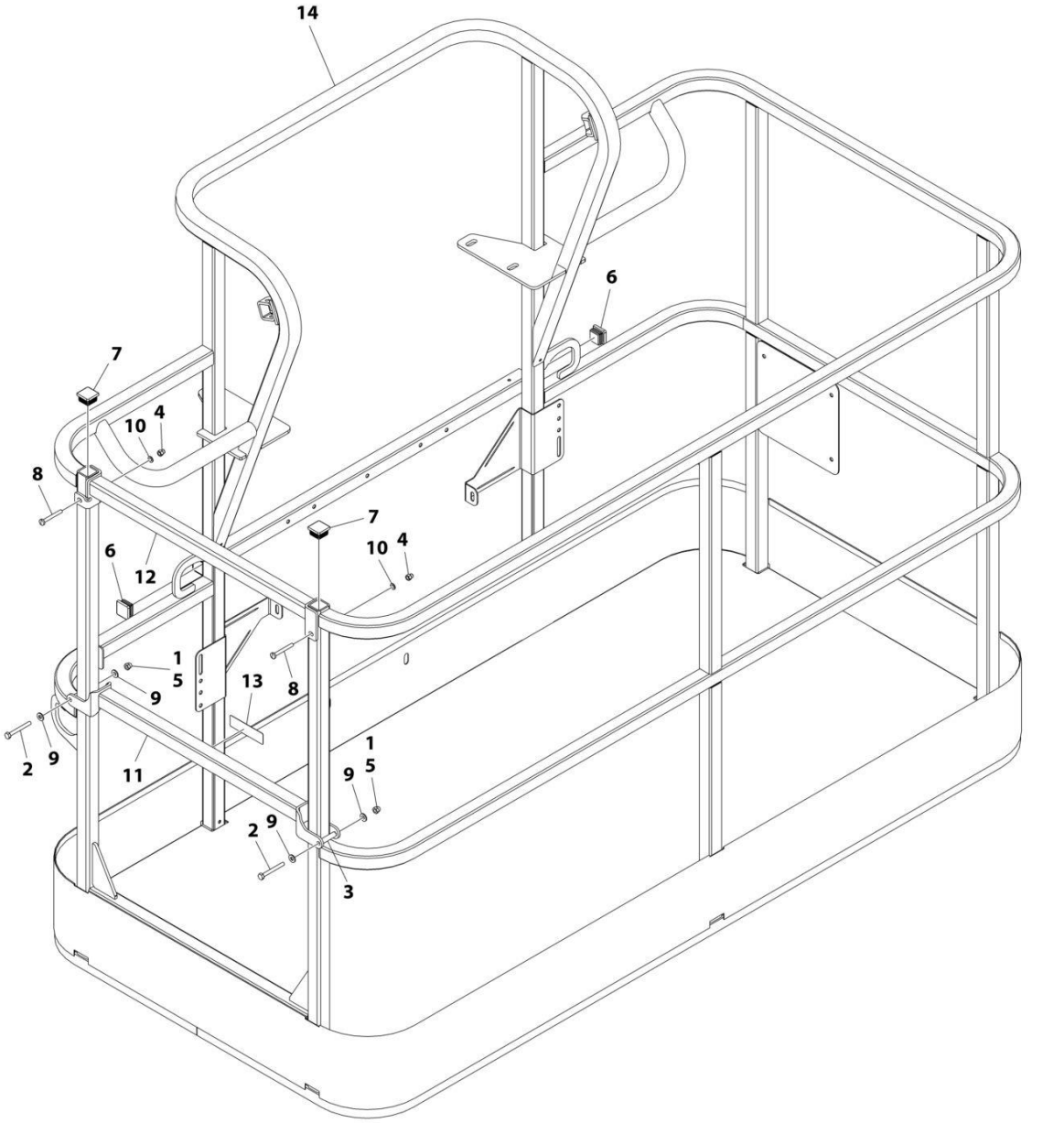

FIGURE 5-6. PLATFORM ASSEMBLY WITH DROP-BAR - 30IN X 6FT (76CM X 1.83M)

ITEM	PART NUMBER	QTY	DESCRIPTION	REV
	1001186378	Ref	PLATFORM ASSEMBLY	C
		Ref	Note: Platform and Mesh must be ordered separately for Platforms with Mesh. See SPECIAL OPTIONS SECTION for Mesh Installations.	
		Ref	Note: Replacement Decals Must be Ordered Separately - See DECALS SECTION.	
1	0100011	AR	Compound, Locking	
2	0641418	2	Bolt 1/4 x 2-1/4	
3	0961845	2	Bushing	
4	3290606	2	Nut M6	
5	3300151	2	Nut 1/4	
6	3520072	2	Plug	
7	3520198	2	Plug	
8	4010618	2	Screw M6 x 50	
9	4711400	4	Washer 1/4	
10	4811700	2	Washer M6	
11	1001138494	1	Bar, Drop	
12	1001138514	1	Rail (Top)	
13	1001140429	1	Decal - Drop Bar	
14	See Note	NSS	Platform (Note: Not Available - Purchase Platform Assembly)	

FIGURE 5-7. PLATFORM ASSEMBLY WITH DROP-BAR - 36IN X 6FT (91.5CM X 1.83M)

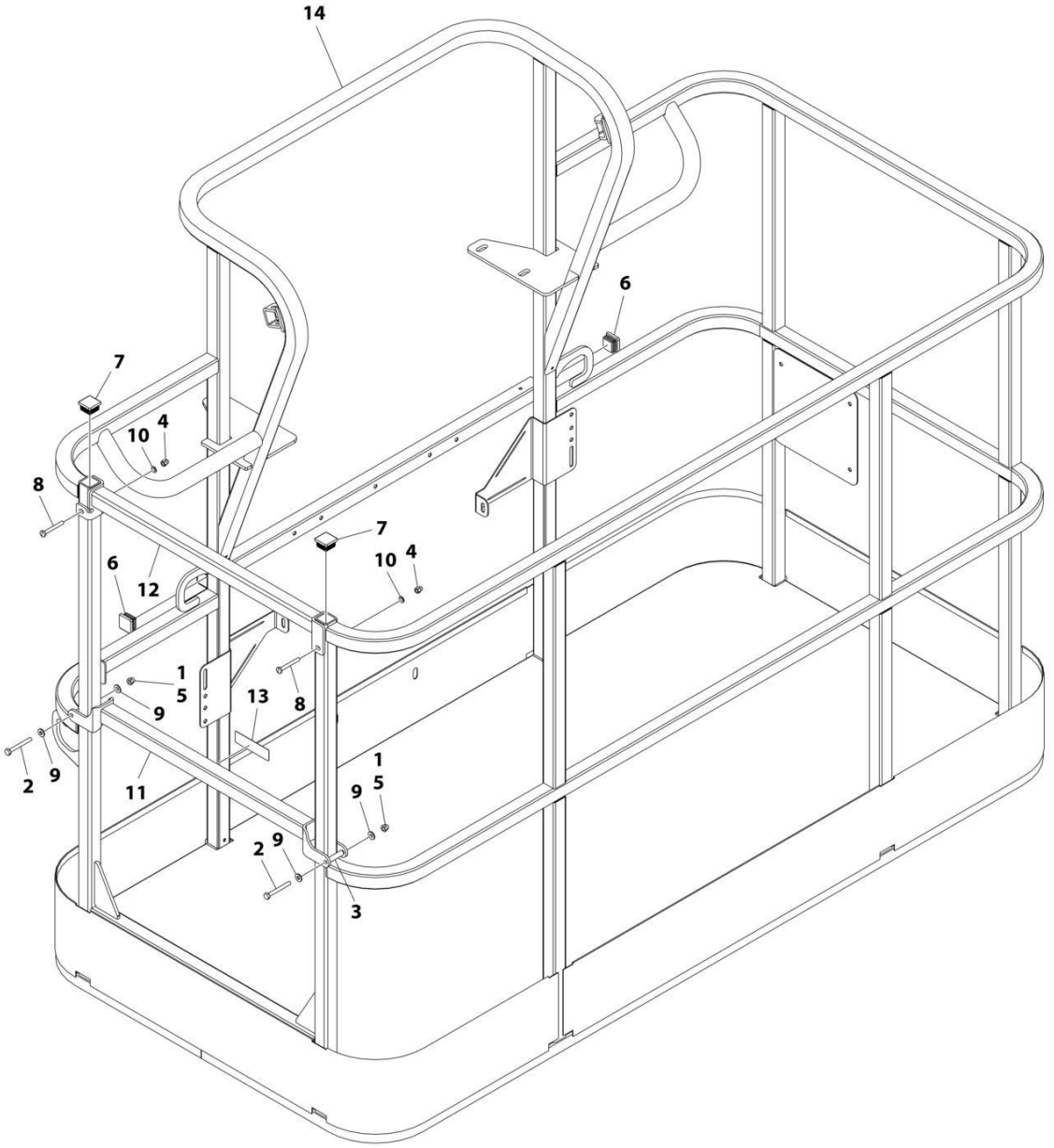

FIGURE 5-7. PLATFORM ASSEMBLY WITH DROP-BAR - 36IN X 6FT (91.5CM X 1.83M)

ITEM	PART NUMBER	QTY	DESCRIPTION	REV
	1001186379	Ref	PLATFORM ASSEMBLY - 36IN X 6FT (91.5CM X 1.83M) WITH DROP BAR	B
		Ref	Note: Platform and Mesh must be ordered separately for Platforms with Mesh. See SPECIAL OPTIONS SECTION for Mesh Installations.	
		Ref	Note: Replacement Decals Must be Ordered Separately - See DECALS SECTION.	
1	0100011	AR	Compound, Locking	
2	0641418	2	Bolt 1/4 x 2-1/4	
3	0961845	2	Bushing	
4	3290606	2	Nut M6	
5	3300151	2	Nut 1/4	
6	3520072	2	Plug	
7	3520198	2	Plug	
8	4010618	2	Screw M6 x 50	
9	4711400	4	Washer 1/4	
10	4811700	2	Washer M6	
11	1001138494	1	Bar, Drop	
12	1001138514	1	Rail (Top)	
13	1001140429	1	Decal - Drop Bar	
14	See Note	NSS	Platform (Note: Not Available - Purchase Platform Assembly)	

FIGURE 5-8. PLATFORM ASSEMBLY WITH 1 GATE / 2 DROP BARS (TRI-ENTRY) - 36IN X 6FT (91.5CM X 1.83M)

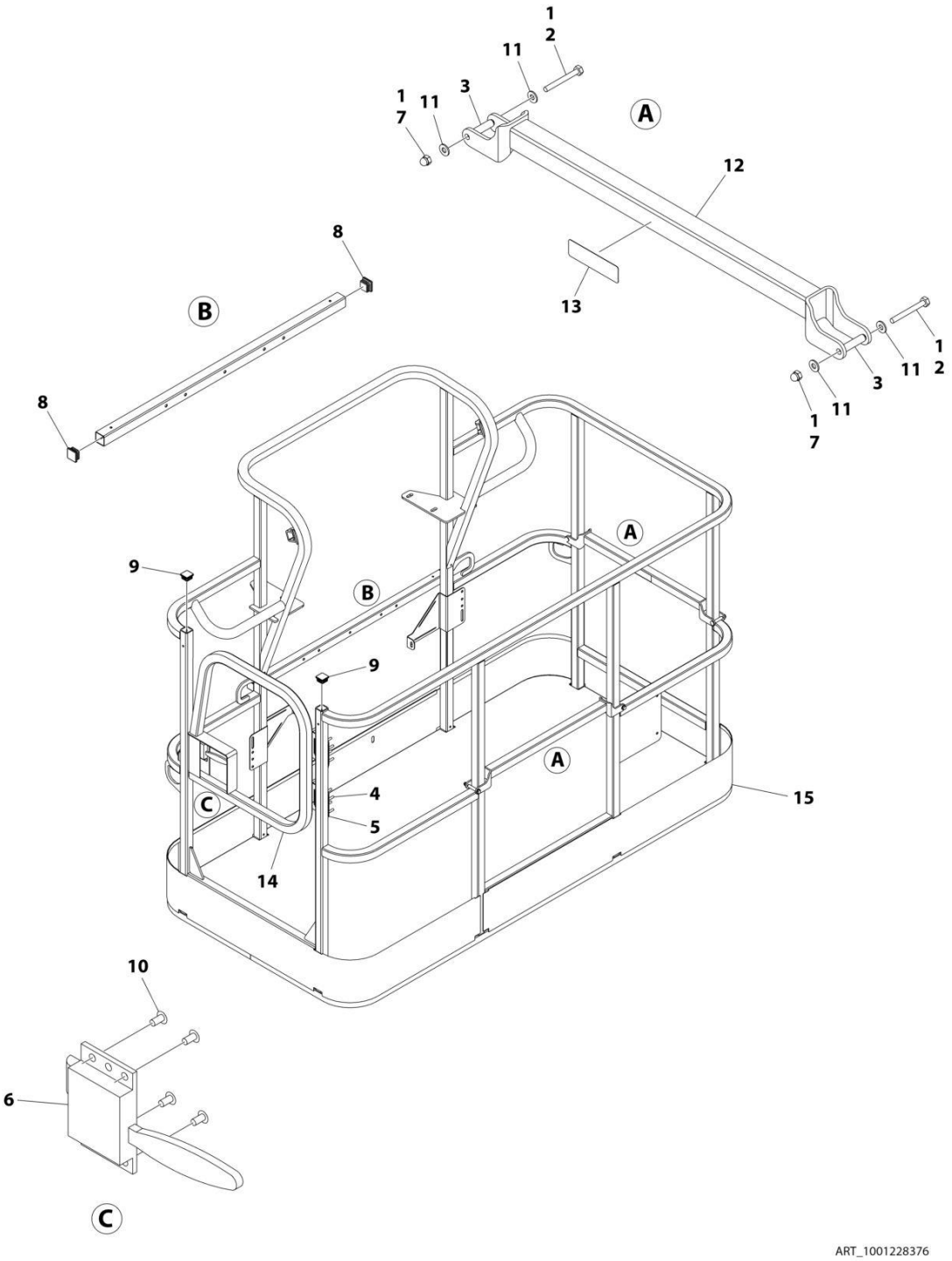

FIGURE 5-8. PLATFORM ASSEMBLY WITH 1 GATE / 2 DROP BARS (TRI-ENTRY) - 36IN X 6FT (91.5CM X 1.83M)

ITEM	PART NUMBER	QTY	DESCRIPTION	REV
	1001228376	Ref	PLATFORM ASSEMBLY - 36IN x 6FT (91.5CM x 1.83M)	B
		Ref	Note: Platform and Mesh must be ordered separately for Platforms with Mesh. See SPECIAL OPTIONS SECTION for Mesh Installations.	
		Ref	Note: Replacement Decals Must be Ordered Separately - See DECAL SECTION.	
1	0100011	AR	Compound, Locking	
2	0641418	4	Bolt 1/4 x 2-1/4	
3	0961845	4	Bushing	
4	2080040	16	Fastener	
5	2600281	2	Hinge	
6	2940074	1	Latch	
7	3300151	4	Nut 1/4	
8	3520072	3	Plug	
9	3520198	2	Plug	
10	3820020	4	Rivet	
11	4711400	8	Washer 1/4	
12	1001138494	2	Bar, Drop	
13	1001140429	2	Decal - Drop Bar	
14	1001144629	1	Gate	
15	See Note	NSS	Platform (Note: Not Available - Purchase Platform Assembly)	

FIGURE 5-9. PLATFORM ASSEMBLY WITH 3 DROP BARS (TRI-ENTRY) - 36IN X 6FT (91.5CM X 1.83M)

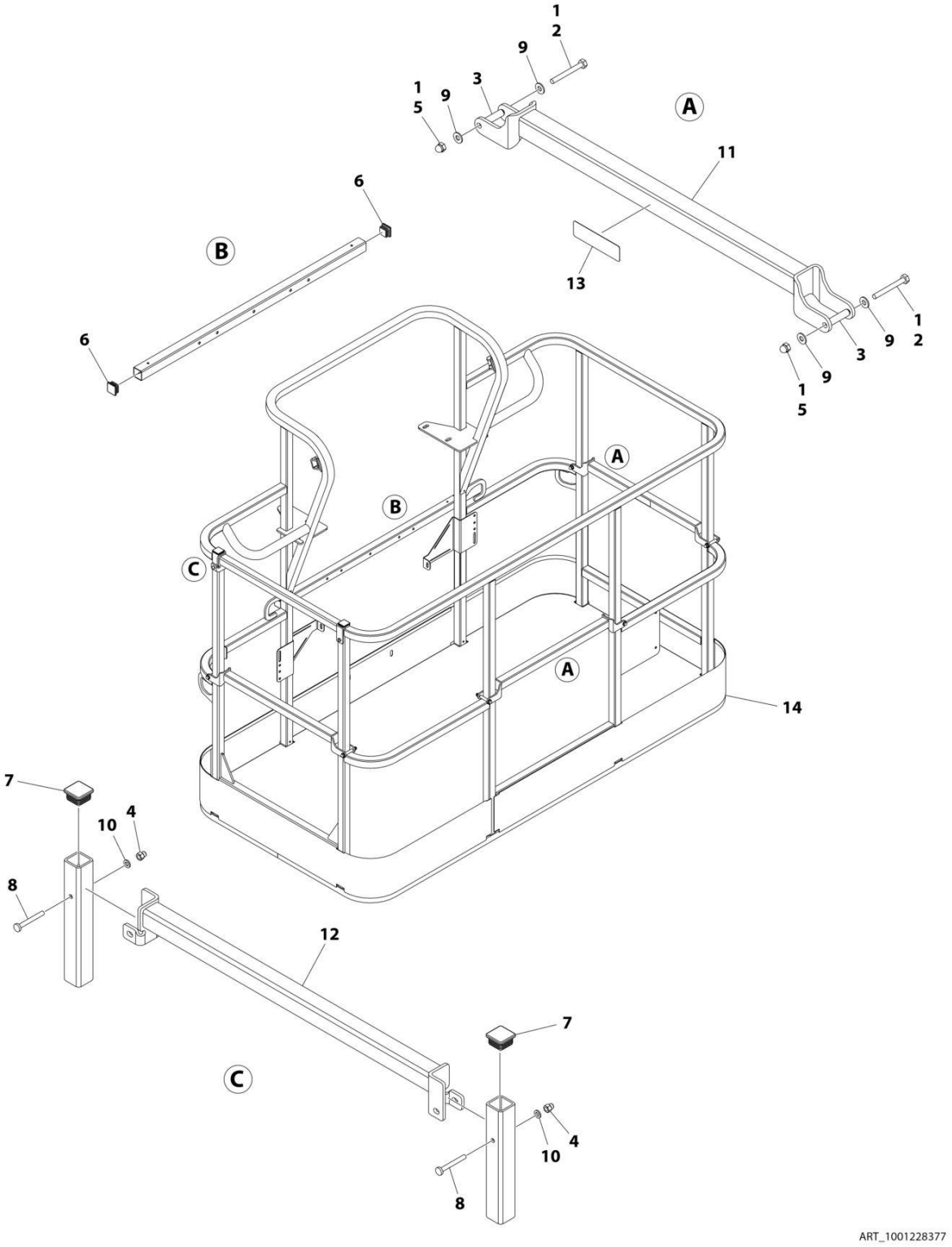

FIGURE 5-9. PLATFORM ASSEMBLY WITH 3 DROP BARS (TRI-ENTRY) - 36IN X 6FT (91.5CM X 1.83M)

ITEM	PART NUMBER	QTY	DESCRIPTION	REV
	1001228377	Ref	PLATFORM ASSEMBLY - 36IN x 6FT (91.5CM x 1.83M)	B
		Ref	Note: Platform and Mesh must be ordered separately for Platforms with Mesh. See SPECIAL OPTIONS SECTION for Mesh Installations.	
		Ref	Note: Replacement Decals Must be Ordered Separately - See DECAL SECTION.	
1	0100011	1	Compound, Locking	
2	0641418	6	Bolt 1/4 x 2-1/4	
3	0961845	6	Bushing	
4	3290606	2	Nut M6	
5	3300151	6	Nut 1/4	
6	3520072	2	Plug	
7	3520198	2	Plug	
8	4010618	2	Screw M6 x 50	
9	4711400	12	Washer 1/4	
10	4811700	2	Washer M6	
11	1001138494	3	Bar, Drop	
12	1001138514	1	Rail (Top)	
13	1001140429	3	Decal - Drop Bar	
14	See Note	NSS	Platform, Weldment (Note: Not Available - Purchase Platform Assembly)	

FIGURE 5-10. PLATFORM ASSEMBLY WITH FALL ARREST (6FT)

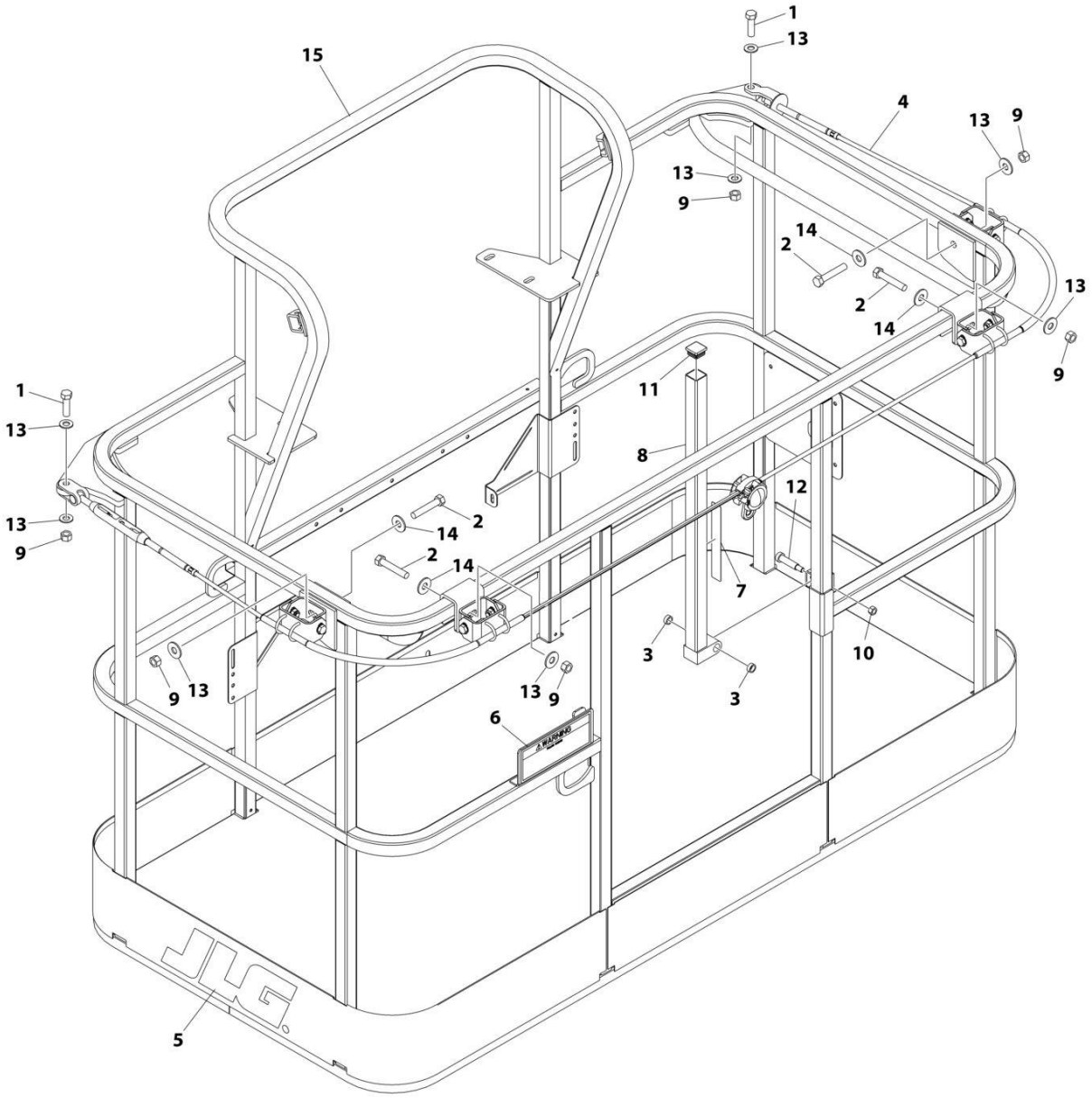

FIGURE 5-10. PLATFORM ASSEMBLY WITH FALL ARREST (6FT)

ITEM	PART NUMBER	QTY	DESCRIPTION	REV
	1001186333	Ref	PLATFORM ASSEMBLY	C
		Ref	Note: Replacement Decals Must be Ordered Separately - See DECALS SECTION.	
1	0681814	2	Bolt 1/2 x 1-3/4 Grade 8	
2	0681822	4	Bolt 1/2 x 2-3/4 Grade 8	
3	0962270	2	Bearing	
4	1001203655	1	Cable	
5	1702773	1	Decal - JLG	
6	1705014	1	Decal - Safety	
7	1706385	1	Decal - Drop Bar	
8	2410014	1	Bar, Drop	
9	3271805	6	Nut 1/2 Grade 8	
10	3311605	1	Nut 3/8	
11	3520072	1	Plug	
12	3900054	1	Bolt 1/2 x 1-3/4	
13	4711800	8	Washer 1/2	
14	4751800	4	Washer 1/2	
15	See Note	NSS	Platform (Note: Not Available - Purchase Platform Assembly)	

FIGURE 5-11. PLATFORM ASSEMBLY WITH GATE - 36IN X 8FT (91.5CM X 2.44M)

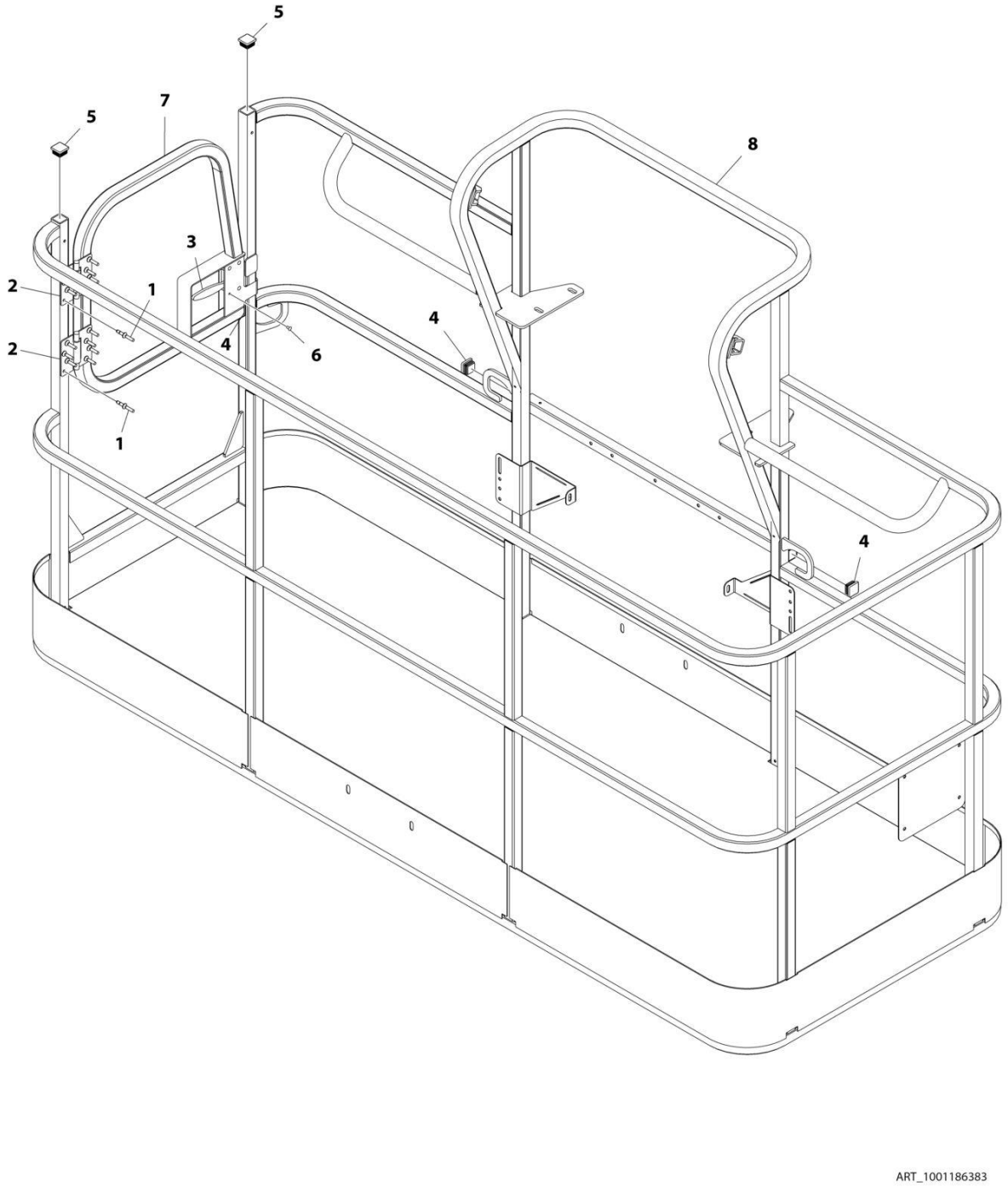

FIGURE 5-11. PLATFORM ASSEMBLY WITH GATE - 36IN X 8FT (91.5CM X 2.44M)

ITEM	PART NUMBER	QTY	DESCRIPTION	REV
	1001186383	Ref	PLATFORM ASSEMBLY - 36IN X 8FT (91.5CM X 2.44M) WITH SWING GATE	D
		Ref	Note: Platform and Mesh must be ordered separately for Platforms with Mesh. See SPECIAL OPTIONS SECTION for Mesh Installations.	
		Ref	Note: Replacement Decals Must be Ordered Separately - See DECALS SECTION.	
1	2080040	16	Fastener, Huck	
2	2600281	2	Hinge	
3	2940074	1	Latch	
4	3520072	3	Plug	
5	3520198	2	Plug	
6	3820020	4	Rivet	
7	1001144629	1	Gate	
8	See Note	NSS	Platform (Note: Not Available - Purchase Platform Assembly)	

FIGURE 5-12. PLATFORM ASSEMBLY WITH DROP-BAR - 36IN X 8FT (91.5CM X 2.44M)

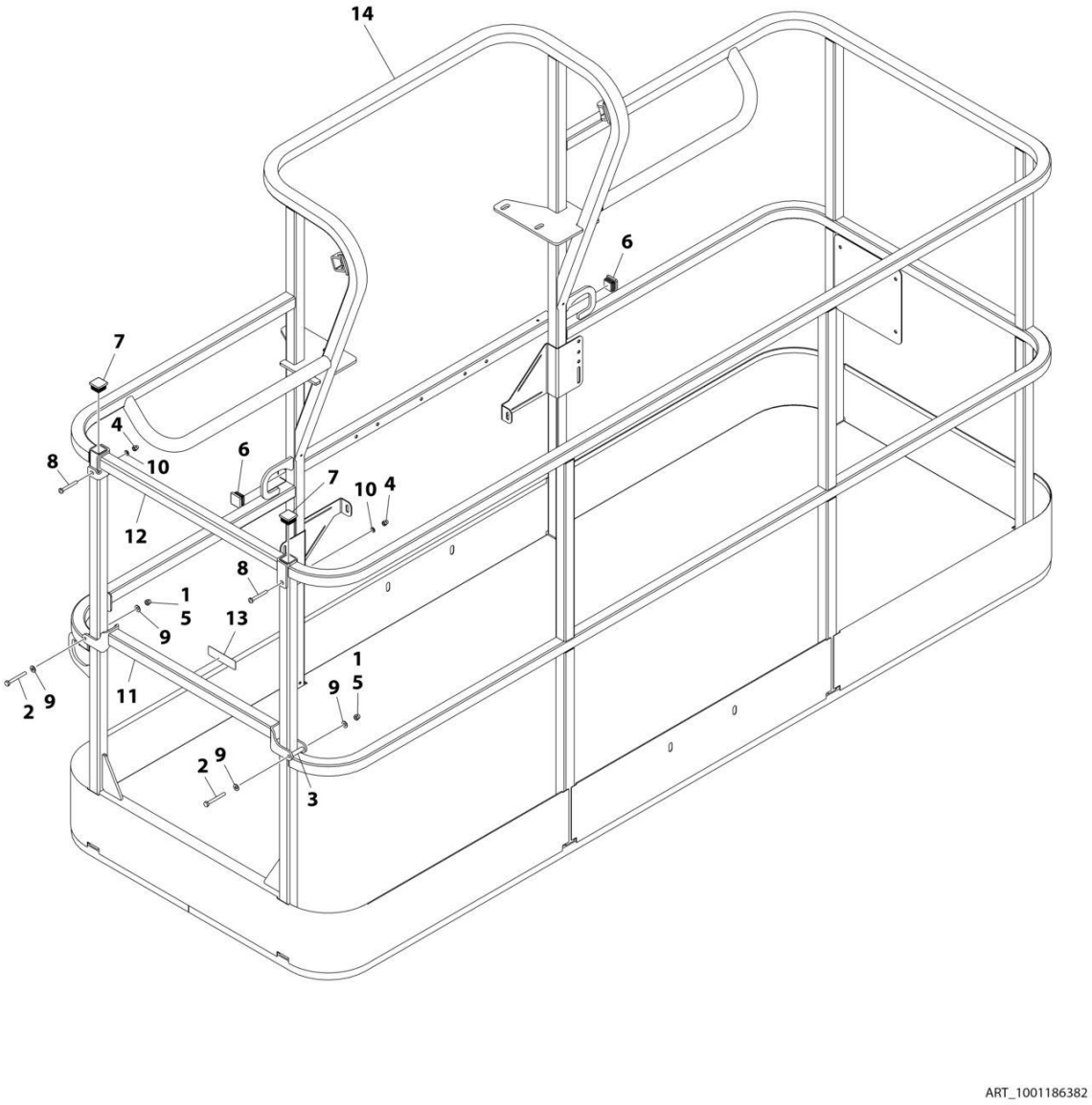

FIGURE 5-12. PLATFORM ASSEMBLY WITH DROP-BAR - 36IN X 8FT (91.5CM X 2.44M)

ITEM	PART NUMBER	QTY	DESCRIPTION	REV
	1001186382	Ref	PLATFORM ASSEMBLY - 36IN X 8FT (91.5CM X 2.44M) WITH DROP BAR	C
		Ref	Note: Platform and Mesh must be ordered separately for Platforms with Mesh. See SPECIAL OPTIONS SECTION for Mesh Installations.	
		Ref	Note: Replacement Decals Must be Ordered Separately - See DECALS SECTION.	
1	0100011	AR	Compound, Locking	
2	0641418	2	Bolt 1/4 x 2-1/4	
3	0961845	2	Bushing	
4	3290606	2	Nut M6	
5	3300151	2	Nut 1/4	
6	3520072	2	Plug	
7	3520198	2	Plug	
8	4010618	2	Screw M6 x 50	
9	4711400	4	Washer 1/4	
10	4811700	2	Washer M6	
11	1001138494	1	Bar, Drop	
12	1001138514	1	Rail (Top)	
13	1001140429	1	Decal - Drop Bar	
14	See Note	NSS	Platform (Note: Not Available - Purchase Platform Assembly)	

FIGURE 5-13. PLATFORM ASSEMBLY WITH 1 GATE / 2 DROP BARS (TRI-ENTRY) - 36IN X 8FT (91.5CM X 2.44M)

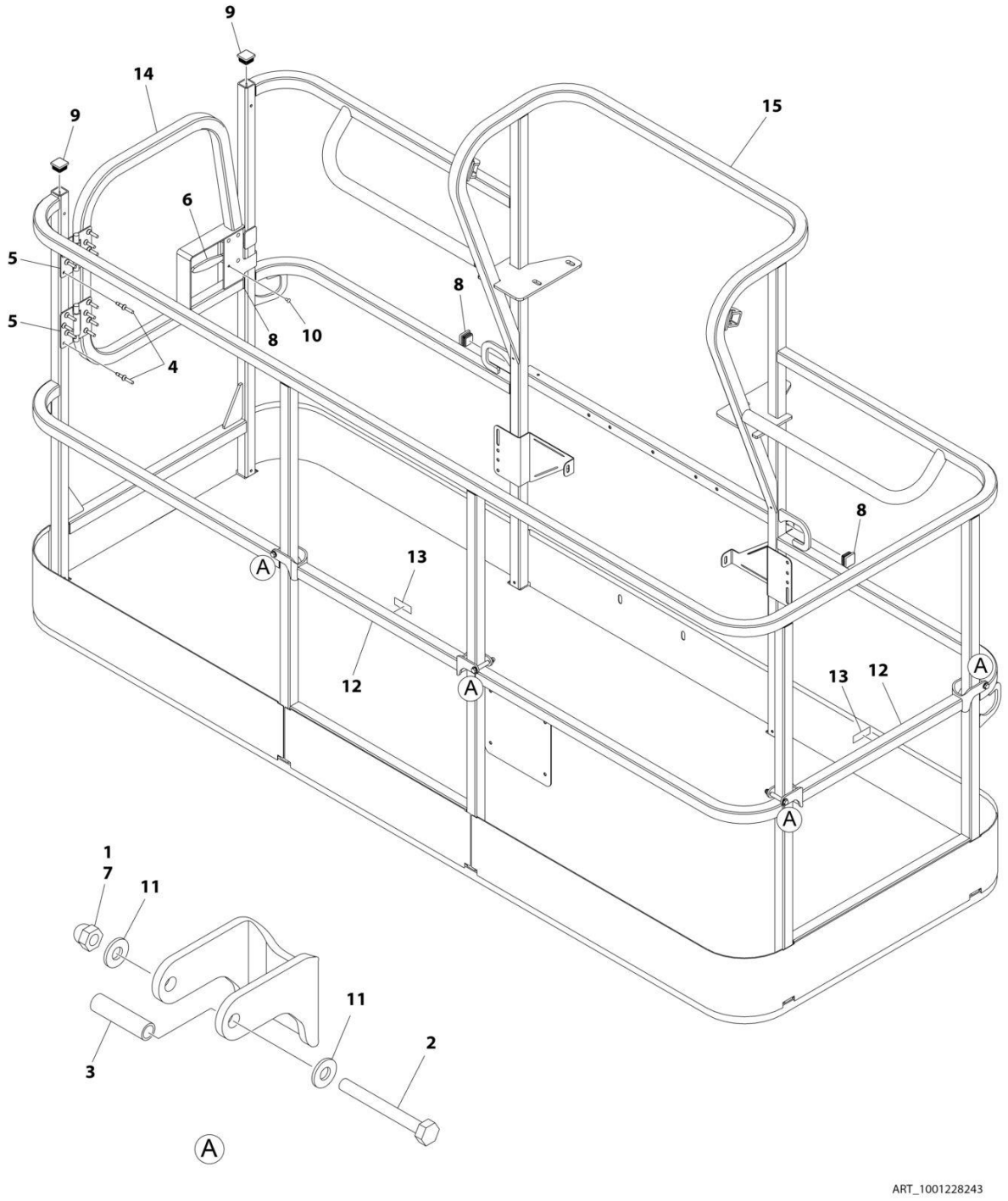

FIGURE 5-13. PLATFORM ASSEMBLY WITH 1 GATE / 2 DROP BARS (TRI-ENTRY) - 36IN X 8FT (91.5CM X 2.44M)

ITEM	PART NUMBER	QTY	DESCRIPTION	REV
	1001228243	Ref	PLATFORM ASSEMBLY - 36IN X 8FT (91.5CM X 2.44M) WITH TRI-ENTRY	A
		Ref	Note: Platform and Mesh must be ordered separately for Platforms with Mesh. See SPECIAL OPTIONS SECTION for Mesh Installations.	
1	0100011	AR	Compound, Locking	
2	0641418	4	Bolt 1/4 x 2-1/4	
3	0961845	4	Bushing	
4	2080040	16	Fastener, Huck	
5	2600281	2	Hinge, Self-Closing	
6	2940074	1	Latch	
7	3300151	4	Nut 1/4	
8	3520072	3	Cap, Plug	
9	3520198	2	Cap, Plug	
10	3820020	4	Rivet	
11	4711400	8	Washer 1/4	
12	1001138494	2	Bar, Drop	
13	1001140429	2	Decal - Drop Bar	
14	1001144629	1	Gate, Weldment	
15	See Note	1	Platform (Note: Not Available - Purchase Platform Assembly)	

FIGURE 5-14. PLATFORM ASSEMBLY WITH 3 DROP BARS (TRI-ENTRY) - 36IN X 8FT (91.5CM X 2.44M)

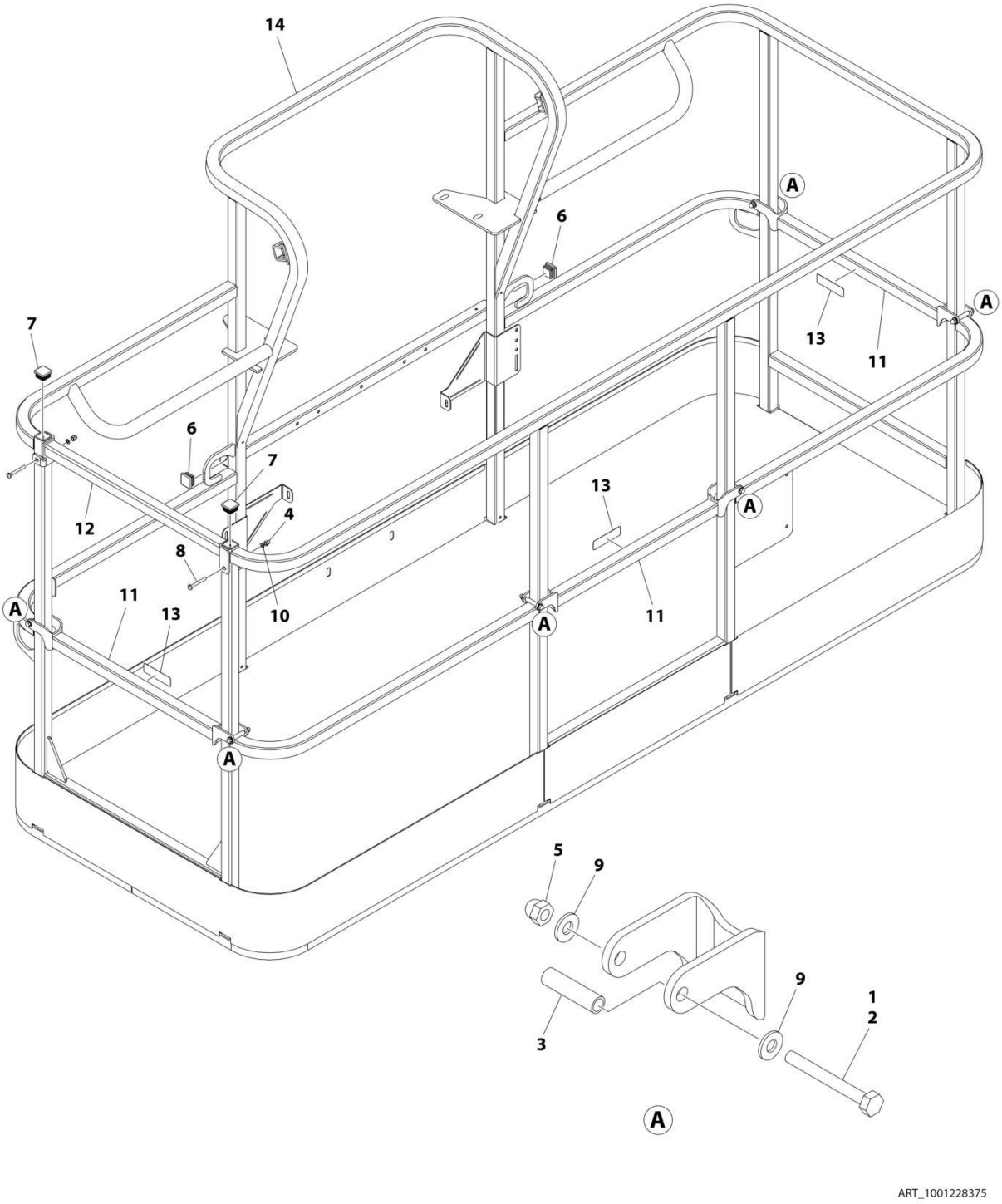

FIGURE 5-14. PLATFORM ASSEMBLY WITH 3 DROP BARS (TRI-ENTRY) - 36IN X 8FT (91.5CM X 2.44M)

ITEM	PART NUMBER	QTY	DESCRIPTION	REV
	1001228375	Ref	PLATFORM ASSEMBLY - 36IN X 8FT (91.5CM X 2.44M) WITH TRI-ENTRY	A
		Ref	Note: Platform and Mesh must be ordered separately for Platforms with Mesh. See SPECIAL OPTIONS SECTION for Mesh Installations.	
		Ref	Note: Replacement Decals Must be Ordered Separately - See DECAL SECTION.	
1	0100011	AR	Compound, Locking	
2	0641418	6	Bolt 1/4 x 2-1/4	
3	0961845	6	Bushing	
4	3290606	2	Nut M6 x 1	
5	3300151	6	Nut 1/4	
6	3520072	2	Cap, Plug	
7	3520198	2	Cap, Plug	
8	4010618	2	Screw M6 x 50	
9	4711400	12	Washer 1/4	
10	4811700	2	Washer M6	
11	1001138494	3	Bar, Drop	
12	1001138514	1	Rail (Top)	
13	1001140429	3	Decal - Drop Bar	
14	See Note	1	Platform (Note: Not Available - Purchase Platform Assembly)	

FIGURE 5-15. PLATFORM ASSEMBLY WITH FALL ARREST (8FT)

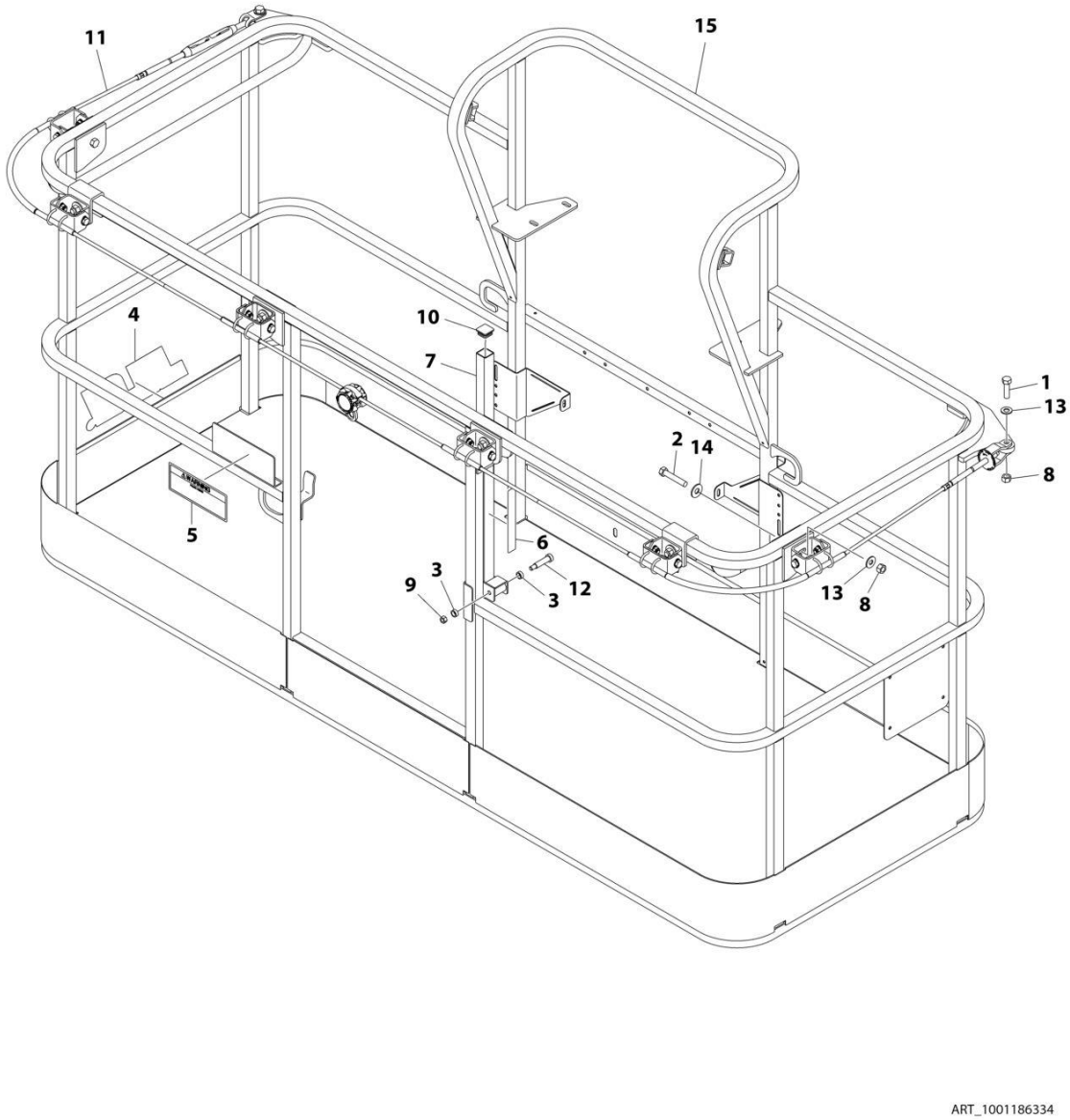

FIGURE 5-15. PLATFORM ASSEMBLY WITH FALL ARREST (8FT)

ITEM	PART NUMBER	QTY	DESCRIPTION	REV
	1001186334	Ref	PLATFORM ASSEMBLY	D
		Ref	Note: Replacement Decals Must be Ordered Separately - See DECALS SECTION.	
1	0681814	2	Bolt 1/2 x 1-3/4 Grade 8	
2	0681822	6	Bolt 1/2 x 2-3/4 Grade 8	
3	0962270	2	Bearing	
4	1702773	1	Decal - JLG	
5	1705014	1	Decal - Safety	
6	1706385	1	Decal - Drop Bar	
7	2410014	1	Bar, Drop	
8	3271805	8	Nut 1/2 Grade 8	
9	3311605	1	Nut 3/8	
10	3520072	1	Plug	
11	1001203656	1	Cable	
12	3900054	1	Bolt 1/2 x 1-3/4	
13	4711800	2	Washer 1/2	
14	4751800	6	Washer 1/2	
15	See Note	NSS	Platform (Note: Purchase Platform Assembly)	

FIGURE 5-16. CONSOLE AND FOOT SWITCH INSTALLATION

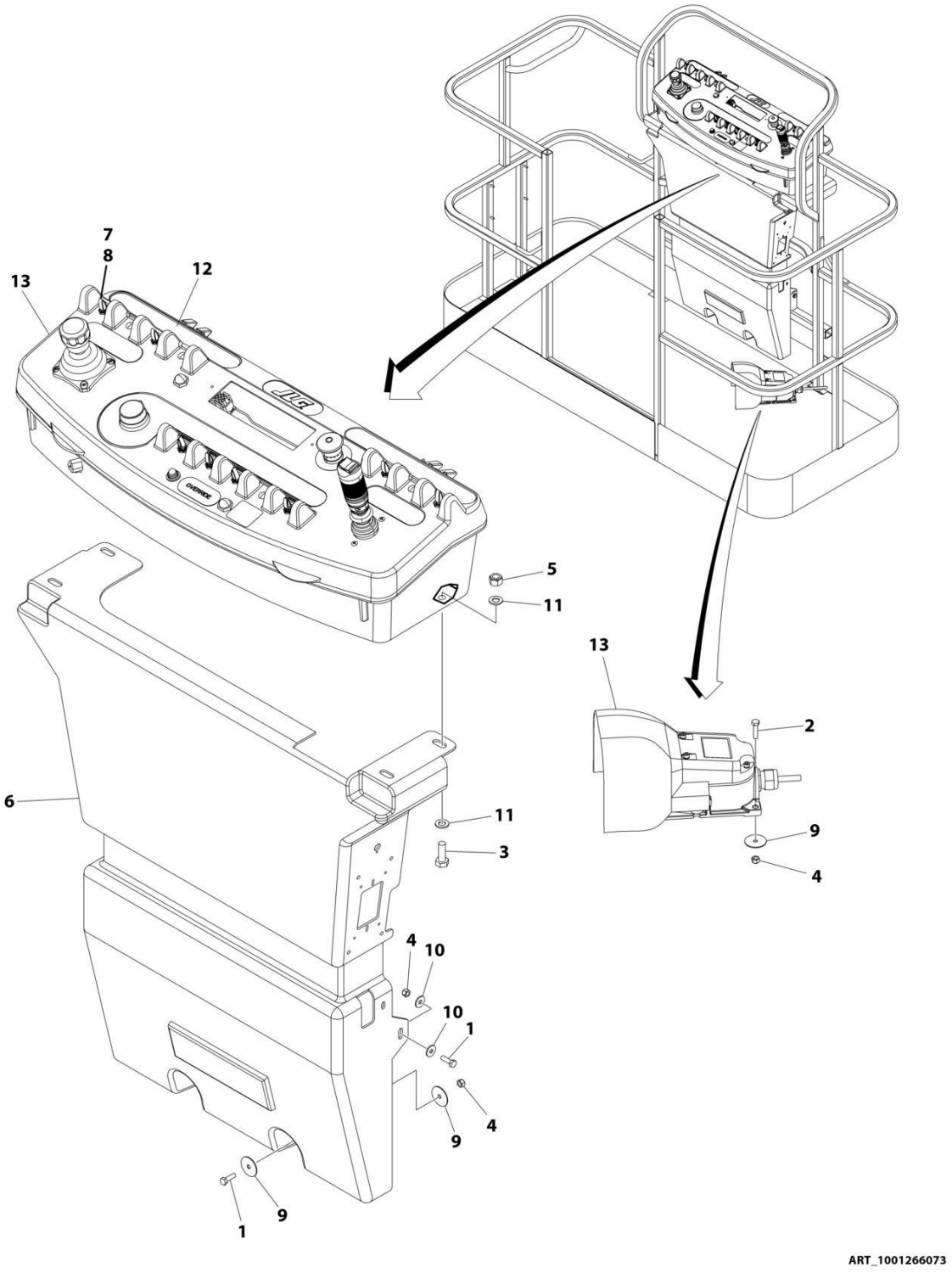

FIGURE 5-16. CONSOLE AND FOOT SWITCH INSTALLATION

ITEM	PART NUMBER	QTY	DESCRIPTION	REV
	1001266073	Ref	PLATFORM CONSOLE AND FOOTSWITCH INSTALLATION	A
1	0641406	4	Bolt 1/4 x 3/4	
2	0641408	3	Bolt 1/4 x 1	
3	0641610	4	Bolt 3/8 x 1-1/4	
4	3311405	7	Nut 1/4	
5	3311605	4	Nut 3/8	
6	3380434	1	Panel	
7	3790012	1	O-Ring	
8	4360331	1	Switch, Toggle	
9	4740362	7	Washer	
10	4751400	4	Washer 1/4	
11	4761600	8	Washer 3/8	
12	1001184626	1	Decal - Horn	
13	1001266069	1	Platform Console Assembly (See Separate Breakdown in this Section)	

FIGURE 5-17. CONSOLE AND FOOT SWITCH INSTALLATION WITH TOWER STOW

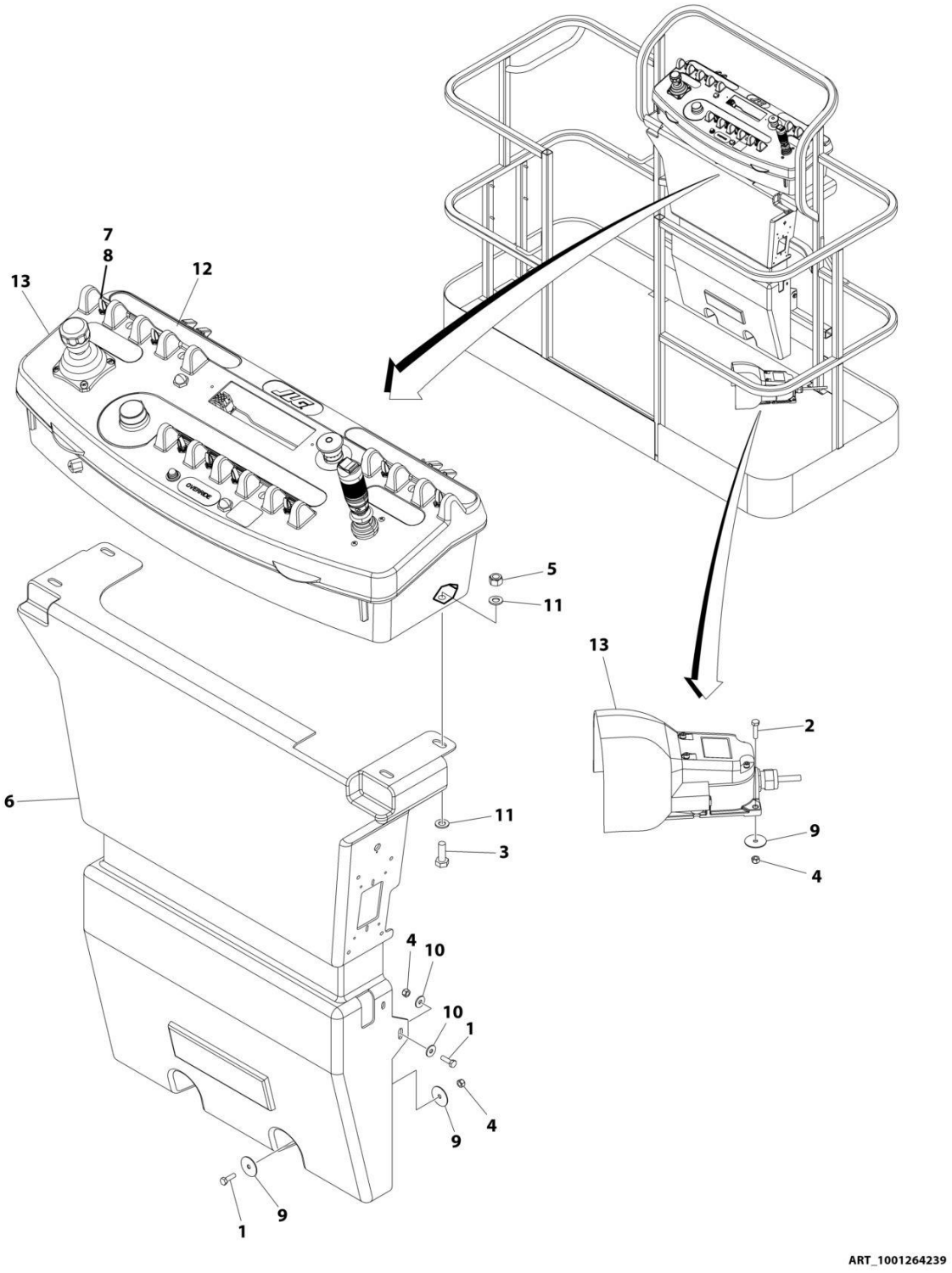

FIGURE 5-17. CONSOLE AND FOOT SWITCH INSTALLATION WITH TOWER STOW

ITEM	PART NUMBER	QTY	DESCRIPTION	REV
	1001264239	Ref	PLATFORM CONSOLE AND FOOTSWITCH INSTALLATION (TOWER STOW)	A
1	0641406	4	Bolt 1/4 x 3/4	
2	0641408	3	Bolt 1/4 x 1	
3	0641610	4	Bolt 3/8 x 1-1/4	
4	3311405	7	Nut 1/4	
5	3311605	4	Nut 3/8	
6	3380434	1	Panel	
7	3790012	AR	O-Ring	
8	4360331	AR	Switch, Toggle	
9	4740362	7	Washer	
10	4751400	4	Washer 1/4	
11	4761600	8	Washer 3/8	
12	1001184626	AR	Decal - Horn	
13	1001263588	1	Platform Console Assembly (See Separate Breakdown in this Section)	

FIGURE 5-18. CONSOLE BOX ASSEMBLY WITH FOOTSWITCH

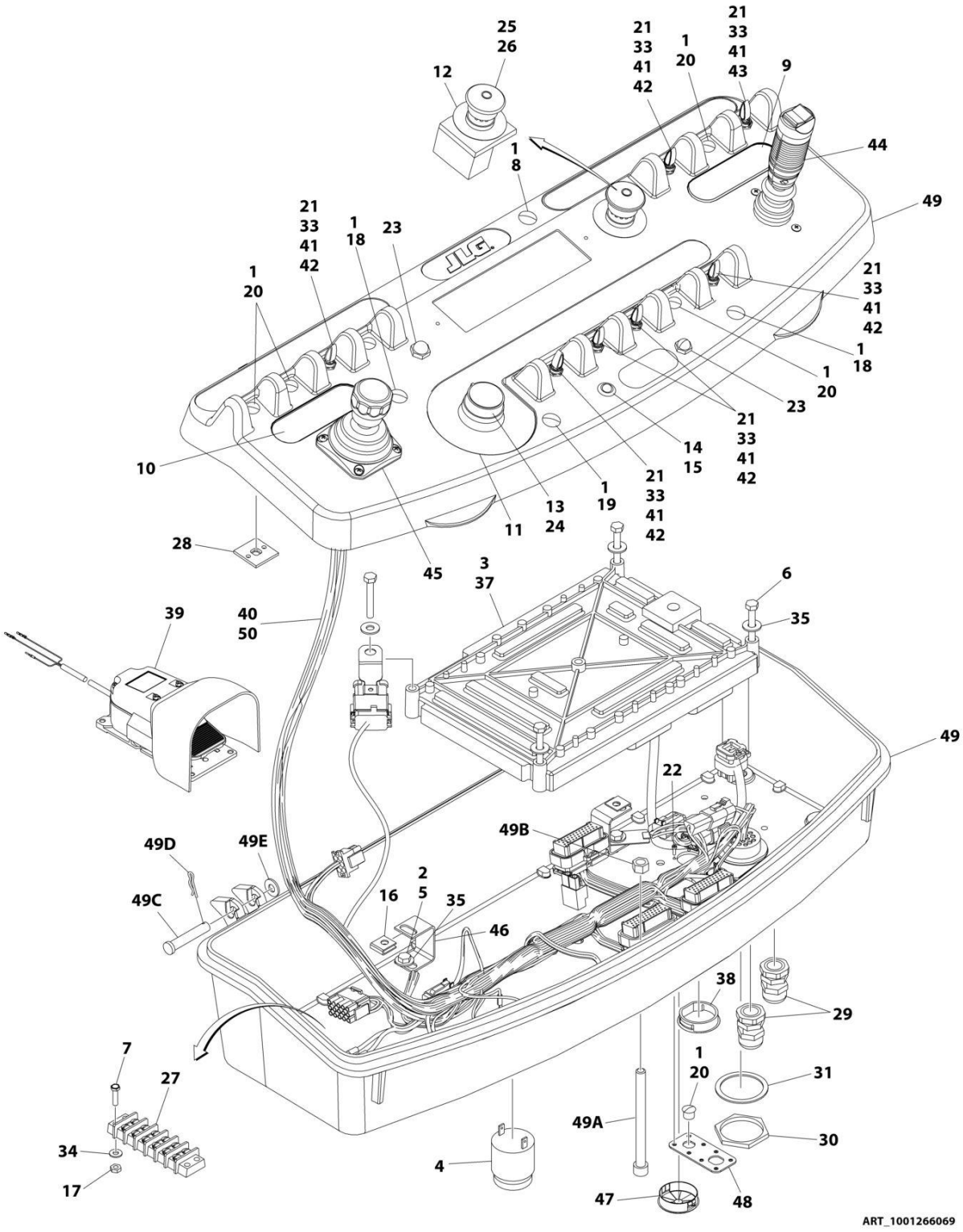

FIGURE 5-18. CONSOLE BOX ASSEMBLY WITH FOOTSWITCH

ITEM	PART NUMBER	QTY	DESCRIPTION	REV
	1001266069	Ref	CONSOLE BOX ASSEMBLY	A
1	0100009	AR	Sealant	
2	0100035	AR	Compound, Locking	
3	0100048	AR	Grease, Dielectric	
4	0140011	1	Alarm	
5	0641404	4	Bolt 1/4 x 1/2	
6	0641414	4	Bolt 1/4 x 1-3/4	
7	0721006	1	Bolt #10 x 3/4	
8	1671314	1	Cover	
9	1702565	1	Decal - Drive and Steer	
10	1702566	1	Decal - Lift and Swing	
11	1702567	1	Decal - Function Speed	
12	1704260	1	Decal - Emergency Stop	
13	2560136	1	Handle, Knob	
14	2920028	1	Light, Indicator	
15	2920029	1	Bulb, Light	
16	3300353	4	Nut, Tinnerman	
17	3311005	2	Nut #10	
18	3520026	2	Plug	
19	3520027	1	Plug	
20	3520054	5	Plug	
21	3790012	7	O-Ring	
22	3900349	8	Capscrew M2.5 x 8	
23	4360387	2	Switch, Push Button	
24	4360407	1	Controller, Speed	
24	4460224	1	Receptacle, Female - 6 Position	
24	4460226	6	Socket, Female	
24	See Note	1	Gasket "Top Hat" (Included with Switch) (Note: Not Available - Purchase Complete Controller)	
24	70003784	1	Seal	
25	4360475	1	Switch, Emergency Stop	
25	7020175	1	Cap, Red	
25	7020176	1	Block, Contact	
26	4360476	1	Contact, Switch	
27	4460007	1	Bussbar	
28	4460234	3	Mount, Tie-Strap	
29	4460428	2	Connector, Strain Relief	
30	4460470	1	Nut, Terminal	
31	4460471	1	Washer, Terminal	
32	4460708	2	Connector - 15 Position (Not Shown)	
33	4740397	7	Washer	
34	4751000	2	Washer #10	
35	4751400	8	Washer 1/4	
36	4922666	1	Analyzer Harness (Not Shown)	
36	4460761	1	Receptacle, Female - 4 Position	
36	4460227	4	Pin, Male	
37	1001106938	1	Module, Platform (Note: Re-calibration Required when Replaced)	
38	1001110434	1	Plug	
39	1001117174	1	Footswitch Assembly (See Separate Breakdown in this Section)	
40	1001139135	1	Boom Valve Harness (Not Shown - See Separate Breakdown in	

ITEM	PART NUMBER	QTY	DESCRIPTION	REV
			ELECTRICAL SECTION)	
41	1001155044	7	Nut 15/32	
42	1001155045	6	Switch, Toggle	
43	1001159256	1	Switch, Toggle	
44	1001166538	NLA	Controller Assembly (Drive and Steer) (Use p/n 1001212415) (See Separate Breakdown in this Section)	
45	1001166539	NLA	Controller Assembly (Lift and Swing) (Use p/n 1001129555) (See Separate Breakdown in this Section)	
46	1001172760	4	Bracket	
47	1001185281	1	Plug	
48	1001213882	1	Mount	
49	1001263587	1	Console Box Assembly	
49A	0630568	1	Capscrew 3/8 x 4-1/2	
49B	3311601	1	Nut 3/8	
49C	3430616	2	Pin	
49D	3470003	2	Hairpin	
49E	4711600	2	Washer 3/8	
50	1001266648	1	Platform Console Harness (See Separate Breakdown in ELECTRICAL SECTION)	

FIGURE 5-19. CONSOLE BOX ASSEMBLY WITH FOOTSWITCH WITH TOWER STOW

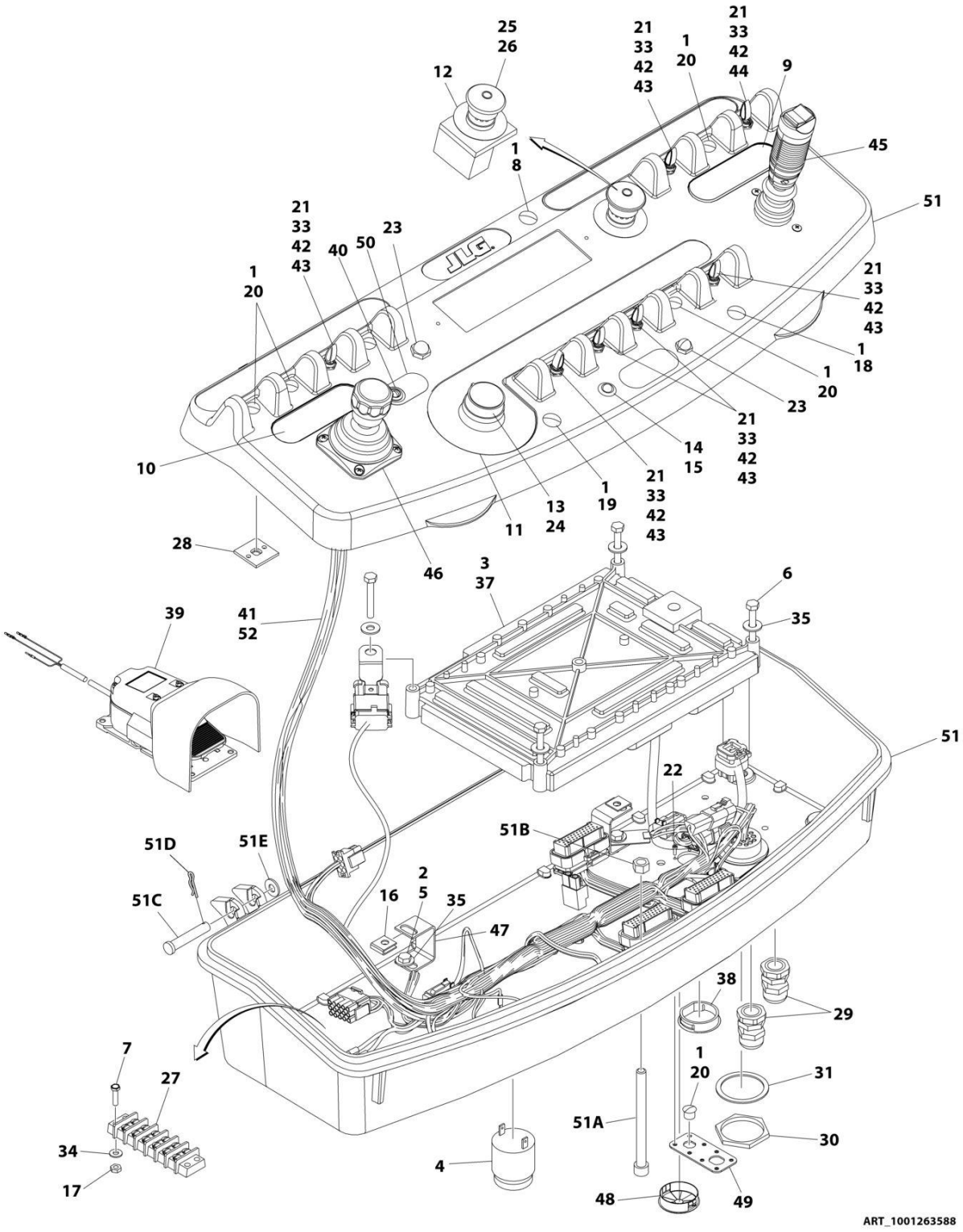

FIGURE 5-19. CONSOLE BOX ASSEMBLY WITH FOOTSWITCH WITH TOWER STOW

ITEM	PART NUMBER	QTY	DESCRIPTION	REV
	1001263588	Ref	CONSOLE BOX ASSEMBLY	A
1	0100009	AR	Sealant	
2	0100035	AR	Compound, Locking	
3	0100048	AR	Grease, Dielectric	
4	0140011	1	Alarm	
5	0641404	4	Bolt 1/4 x 1/2	
6	0641414	4	Bolt 1/4 x 1-3/4	
7	0721006	1	Bolt #10 x 3/4	
8	1671314	1	Cover	
9	1702565	1	Decal - Drive and Steer	
10	1702566	1	Decal - Lift and Swing	
11	1702567	1	Decal - Function Speed	
12	1704260	1	Decal - Emergency Stop	
13	2560136	1	Handle, Knob	
14	2920028	1	Light, Indicator	
15	2920029	1	Bulb, Light	
16	3300353	4	Nut, Tinnerman	
17	3311005	2	Nut #10	
18	3520026	2	Plug	
19	3520027	1	Plug	
20	3520054	5	Plug	
21	3790012	7	O-Ring	
22	3900349	8	Capscrew M2.5 x 8	
23	4360387	2	Switch, Push Button	
24	4360407	1	Controller, Speed	
24	4460224	1	Receptacle, Female - 6 Position	
24	4460226	6	Socket, Female	
24	See Note	1	Gasket "Top Hat" (Included with Switch) (Note: Not Available - Purchase Complete Controller)	
24	70003784	1	Seal	
25	4360475	1	Switch, Emergency Stop	
25	7020175	1	Cap, Red	
25	7020176	1	Block, Contact	
26	4360476	1	Contact, Switch	
27	4460007	1	Bussbar	
28	4460234	3	Mount, Tie-Strap	
29	4460428	2	Connector, Strain Relief	
30	4460470	1	Nut, Terminal	
31	4460471	1	Washer, Terminal	
32	4460708	2	Connector - 15 Position (Not Shown)	
33	4740397	7	Washer	
34	4751000	2	Washer #10	
35	4751400	8	Washer 1/4	
36	4922666	1	Analyzer Harness (Not Shown)	
36	4460761	1	Receptacle, Female - 4 Position	
36	4460227	4	Pin, Male	
37	1001106938	1	Module, Platform (Note: Re-calibration Required when Replaced)	
38	1001110434	1	Plug	
39	1001117174	1	Footswitch Assembly (See Separate Breakdown in this Section)	
40	1001137364	1	Light, Indicator	

ITEM	PART NUMBER	QTY	DESCRIPTION	REV
41	1001139135	1	Boom Valve Harness (Not Shown - See Separate Breakdown in ELECTRICAL SECTION)	
42	1001155044	7	Nut 15/32	
43	1001155045	6	Switch, Toggle	
44	1001159256	1	Switch, Toggle	
45	1001166538	NLA	Controller Assembly (Drive and Steer) (Use p/n 1001212415) (See Separate Breakdown in this Section)	
46	1001166539	NLA	Controller Assembly (Lift and Swing) (Use p/n 1001129555) (See Separate Breakdown in this Section)	
47	1001172760	4	Bracket	
48	1001185281	1	Plug	
49	1001213882	1	Mount	
50	1001260937	1	Decal – Tower Stow	
51	1001263587	1	Console Box Assembly	
51A	0630568	1	Capscrew 3/8 x 4-1/2	
51B	3311601	1	Nut 3/8	
51C	3430616	2	Pin	
51D	3470003	2	Hairpin	
51E	4711600	2	Washer 3/8	
52	1001266648	1	Platform Console Harness (See Separate Breakdown in ELECTRICAL SECTION)	

FIGURE 5-20. LIGHT PANEL INSTALLATION

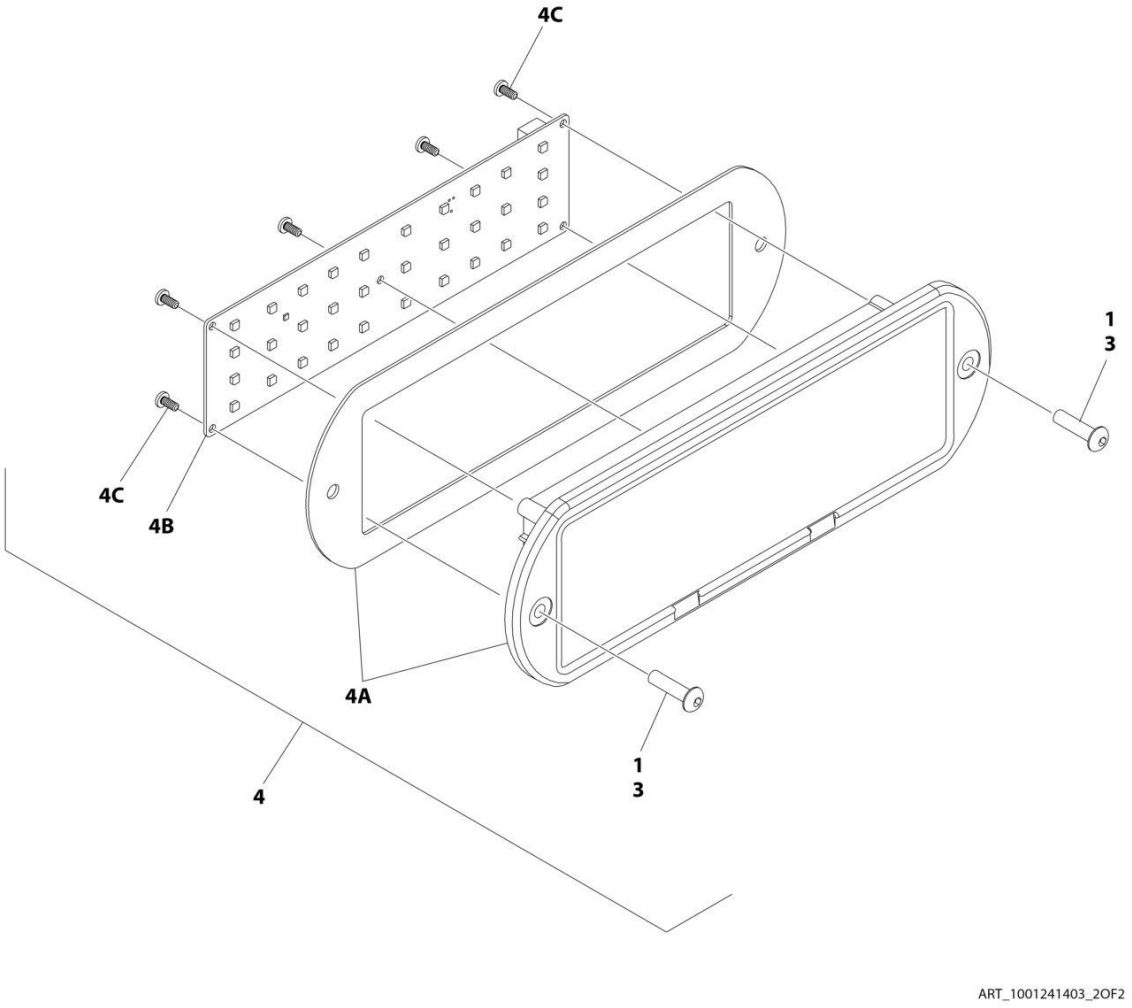

FIGURE 5-20. LIGHT PANEL INSTALLATION

ITEM	PART NUMBER	QTY	DESCRIPTION	REV
	1001241403	Ref	LIGHT PANEL INSTALLATION - PLATFORM CONSOLE	C
1	3300408	1	Nut, Nylon Insert	
3	0630518	2	Screw #10 x 3/4	
4	1001238672	1	Light Panel Electrical Assembly	H
4A	1001236089	1	Lens Assembly (Includes Housing Shell, Decal/Lens with Icons & Gasket)	
4B	1001238732	1	Panel, LED Light	
4C		Ref	Screw	

FIGURE 5-21. FOOTSWITCH ASSEMBLY

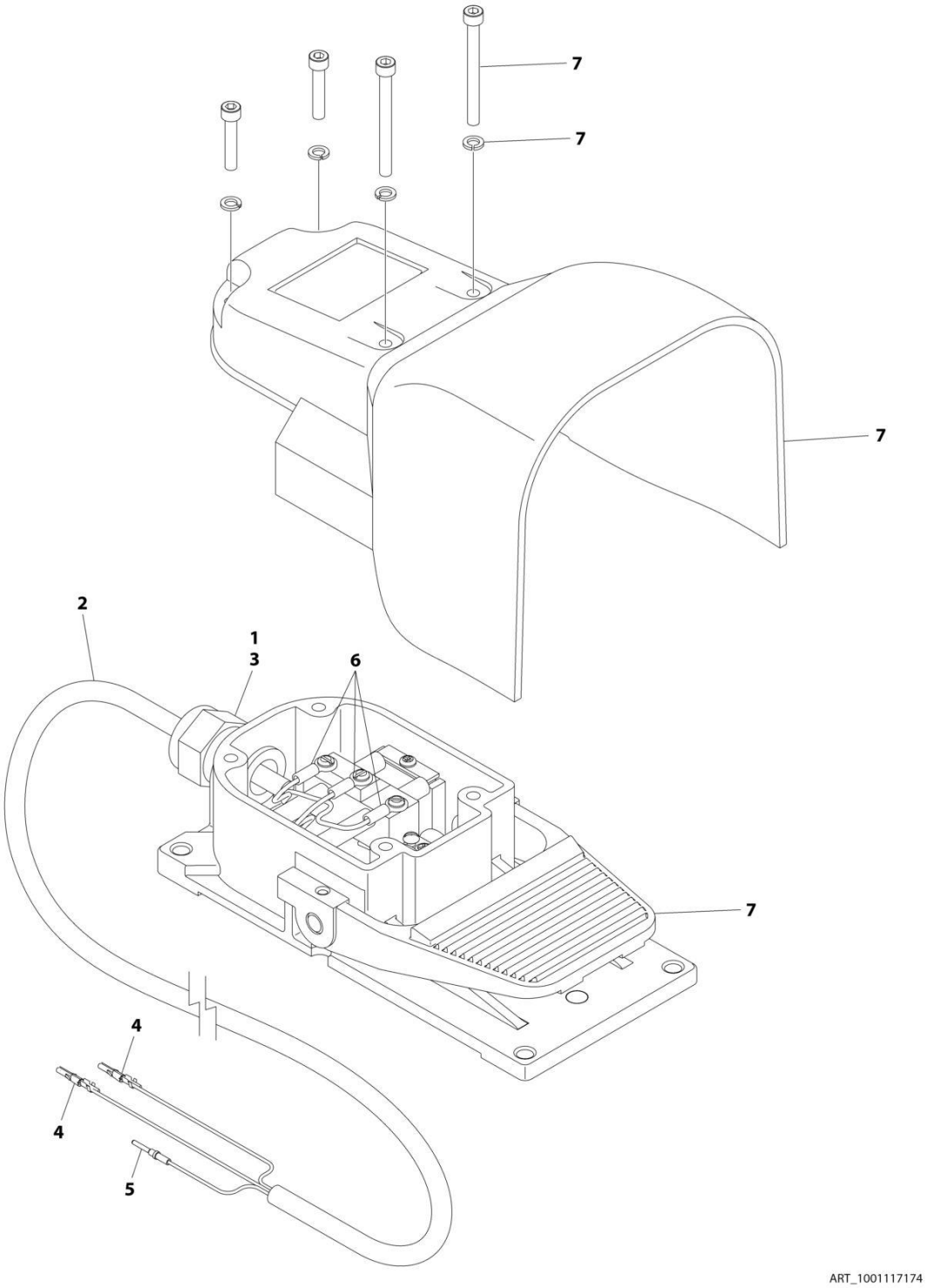

FIGURE 5-21. FOOTSWITCH ASSEMBLY

ITEM	PART NUMBER	QTY	DESCRIPTION	REV
	1001117174	Ref	FOOTSWITCH ASSEMBLY	B
1	0100020	AR	Sealant	
2	1060918	7.5 ft/ 2.3m	Cable, Electrical - 18/3	
3	4460071	1	Connector, Strain Relief	
4	4460226	2	Socket, Female	
5	4460464	1	Pin, Male	
6	1001098122	3	Terminal	
7	1001117172	1	Footswitch	
7	70002902	1	Switch, 20Amp	
7	70002903	1	Gasket	
7	70002905	1	Cover	
7	70002904	1	Kit, Replacement Bolt	

FIGURE 5-22. CONTROLLER ASSEMBLY- DRIVE/STEER

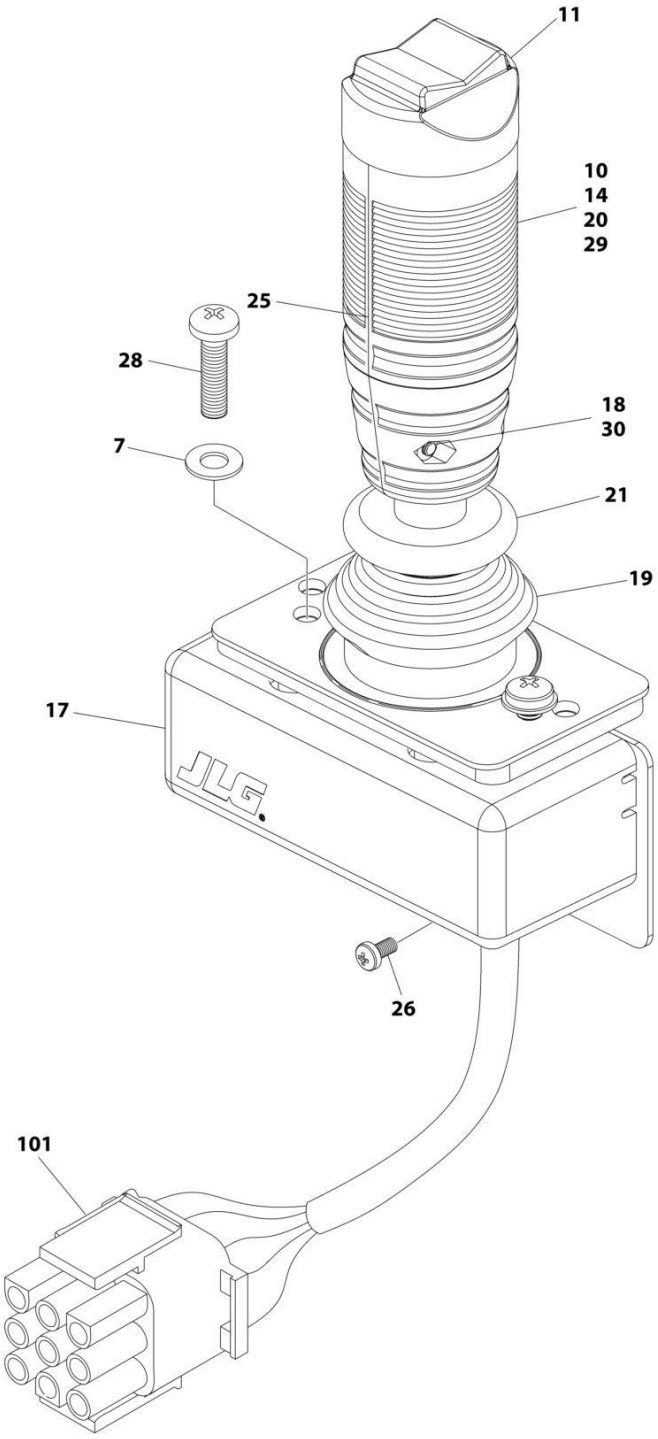

ART_1001166538

FIGURE 5-22. CONTROLLER ASSEMBLY- DRIVE/STEER

ITEM	PART NUMBER	QTY	DESCRIPTION	REV
	1001166538	Ref	CONTROLLER ASSEMBLY - DRIVE AND STEER	G
		Ref	Note: For Replacement, Use p/n 1001212415.	
7	70004738	2	Washer	
10	70004739	1	Roller	
11	70004740	1	Boot, Switch	
14	70004741	2	Half, Handle	
17	70004742	1	Enclosure	
18	70004743	4	Nut	
19	70004744	NLA	Boot, Controller (Use p/n 70005230 Boot/Base Assembly)	
20	70004745	NLA	Tube, Locking (Use p/n 70005230 Boot/Base Assembly)	
21	70004746	NLA	Disc, Locking (Use p/n 70005230 Boot/Base Assembly)	
25	70004747	2	Seal, Rope	
26	70004748	1	Screw M3 x 6	
28	70004749	2	Screw M5 x 20	
29	70004750	1	Pin, Dowel	
30	70004751	4	Screw M3 x 16	
101	4460265	1	Connector - 9 Position	
101	4460226	7	Socket, Female	

FIGURE 5-23. CONTROLLER ASSEMBLY - LIFT/SWING

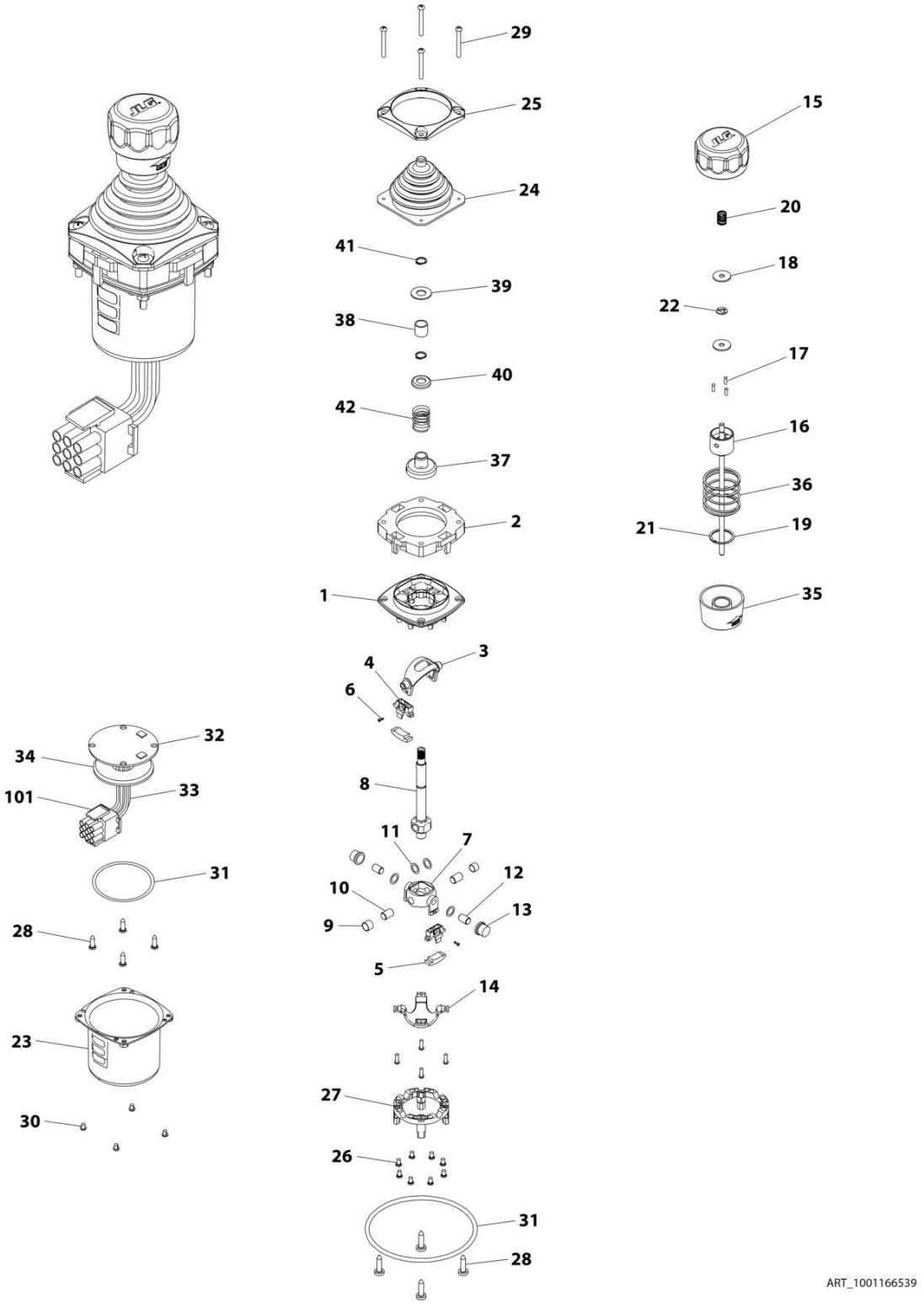

FIGURE 5-23. CONTROLLER ASSEMBLY - LIFT/SWING

ITEM	PART NUMBER	QTY	DESCRIPTION	REV
	1001166539	Ref	CONTROLLER ASSEMBLY	E
		Ref	Note: Original Equipment Controller May Have Been Replaced with Service Replacement Controller. Visually Identify Controller Before Ordering Parts.	
		Ref	Note: For Replacement, Use p/n 1001129555	
1	See Note	NSS	Main Cast Body (Note: Not Available - Purchase Complete Assembly)	
2	70004752	1	Adapter	
3	See Note	NSS	Pivot Arm, Plastic (Note: Not Available - Purchase Complete Assembly)	
4	See Note	NSS	Holder, Magnet (Note: Not Available - Purchase Complete Assembly)	
5	See Note	NSS	Arc, Magnet (Note: Not Available - Purchase Complete Assembly)	
6	See Note	NSS	Screw (Note: Not Available for Purchase)	
7	See Note	NSS	Pivot Arm, Cast (Note: Not Available - Purchase Complete Assembly)	
8	See Note	NSS	Shaft, Main (Note: Not Available - Purchase Complete Assembly)	
9	See Note	NSS	Bearing (Note: Not Available - Purchase Complete Assembly)	
10	See Note	NSS	Pin (Note: Not Available - Purchase Complete Assembly)	
11	See Note	NSS	Shim (Note: Not Available - Purchase Complete Assembly)	
12	See Note	NSS	Pin (Note: Not Available - Purchase Complete Assembly)	
13	See Note	NSS	Bearing (Note: Not Available - Purchase Complete Assembly)	
14	See Note	NSS	Dome, Centering (Note: Not Available - Purchase Complete Assembly)	
15	70004753	1	Cap	
16	70004754	1	Insert, Cap	
17	70004755	3	Pin	
18	70004756	2	Washer	
19	70004757	1	Pin, Centering	
20	70004758	1	Spring	
21	70004759	1	Ring, Retaining	
22	70004760	1	E-Ring	
23	70004761	1	Can, Enclosure	
24	70004762	1	Boot	
25	70004763	1	Bezel	
26	See Note	NSS	Screw (Note: Not Available for Purchase)	
27	See Note	NSS	Base Mounting (Note: Not Available - Purchase Complete Assembly)	
28	See Note	NSS	Screw (Note: Not Available for Purchase)	
29	70004764	4	Screw	
30	70004765	4	Screw	
31	70004766	1	O-Ring	
32	See Note	NSS	Plate (Note: Not Available - Purchase Complete Assembly)	
33	See Note	NSS	Harness (Note: Not Available - Purchase Complete Assembly)	
34	70004767	1	Grommet, Rubber	
35	70004768	1	Housing	
36	70004769	1	Spring	
37	70004770	1	Stopper	
38	70004771	1	Spacer	
39	70004772	1	Washer	
40	70004773	1	Disc	

ITEM	PART NUMBER	QTY	DESCRIPTION	REV
41	70004774	2	Ring, Retaining	
42	70004775	1	Spring	
101	4460265	1	Connector - 9 Position	
101	4460226	6	Socket, Female	

FIGURE 5-24. JIB SWITCH INSTALLATION

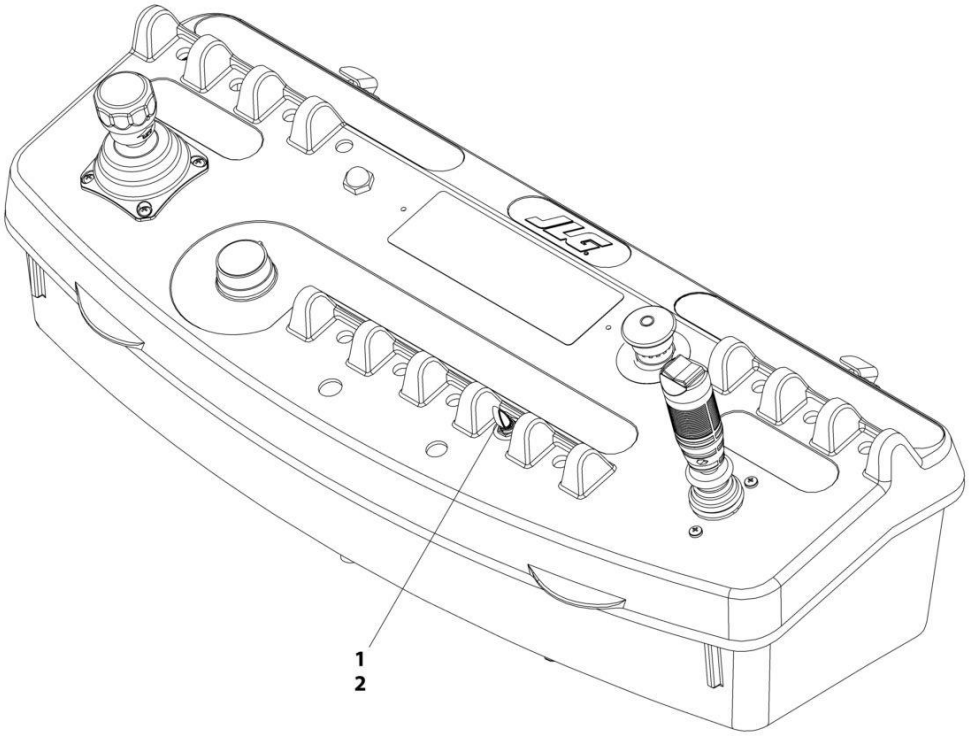

ART_0271340

FIGURE 5-24. JIB SWITCH INSTALLATION

ITEM	PART NUMBER	QTY	DESCRIPTION	REV
	0271340	Ref	JIB SWITCH INSTALLATION	1/A
1	4360328	1	Switch, Toggle	
2	3790012	1	O-Ring	

FIGURE 5-25. SKYEYE INSTALLATION

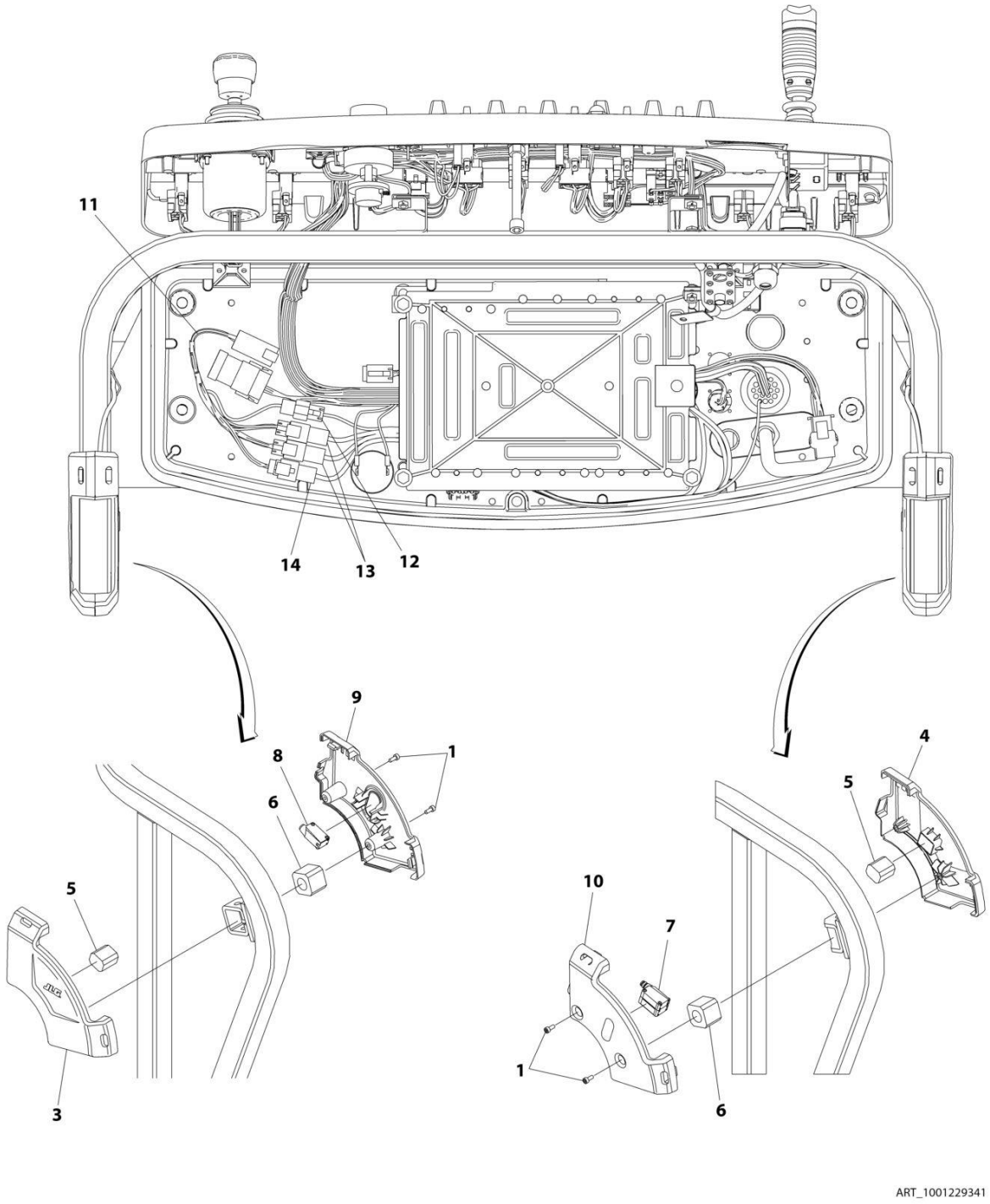

FIGURE 5-25. SKYEYE INSTALLATION

ITEM	PART NUMBER	QTY	DESCRIPTION	REV
	1001229341	Ref	SKYEYE INSTALLATION	B
1	4031505	4	Bolt M4 x 10	
2	4240033	AR	Tie-Strap (Not Shown)	
3	1001227633	1	Housing, LH Outer	
4	1001227634	1	Housing, RH Outer	
5	1001227985	2	Shim	
6	1001227987	2	Shim	
7	1001228224	2	Sensor, Receiver	
8	1001228225	1	Sensor, Emitter	
9	1001232164	1	Housing, LH Inner	
10	1001232165	1	Housing, RH Inner	
11	1001237865	1	Harness, Skyeye Intermediate (See Separate Breakdown in ELECTRICAL Section)	
12	1001238319	NLA	Harness, Skyeye Drain Jumper	
12	1001187674	1	Plug, Male - 2 Position	
12	4460942	1	Terminal	
12	4460466	1	Plug, Terminal	
12	4460508	1	Pin, Male	
13	1001237863	2	Harness, Skyeye Receiver (See Separate Breakdown in ELECTRICAL Section)	
14	1001237864	1	Harness, Skyeye Emitter (See Separate Breakdown in ELECTRICAL Section)	

FIGURE 5-26. SKYGUARD BAR INSTALLATION

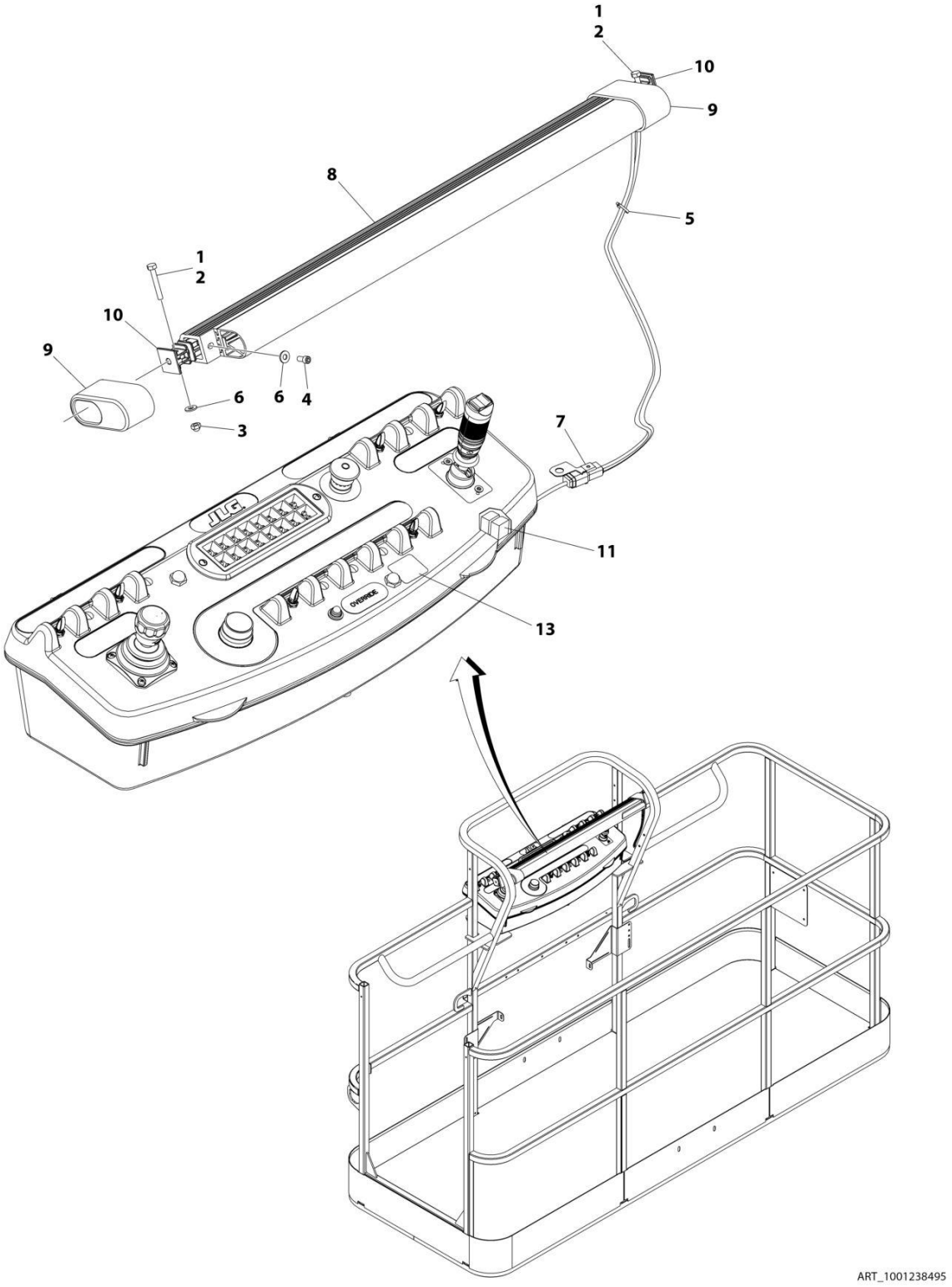

FIGURE 5-26. SKYGUARD BAR INSTALLATION

ITEM	PART NUMBER	QTY	DESCRIPTION	REV
	1001238495	Ref	SKYGUARD BAR INSTALLATION	A
1	0100011	AR	Compound, Locking	
2	0641414	2	Bolt 1/4 x 1-3/4	
3	3300430	2	Nut 1/4	
4	3931408	2	Capscrew 1/4 x 1/2	
5	4240033	8	Tie-Strap	
6	4711400	6	Washer 1/4	
7	1001120328	1	Mount	
8	1001137673	1	SkyGuard Switch Assembly	
9	1001186517	2	Cover, Platform Sensor	
10	1001209664	2	Support, Block	
11	1001186431	2	Relay	
12	1001225580	1	Interface Harness Assembly (Not Shown - Located Inside Console Box) (See Separate Breakdown in ELECTRICAL Section)	
13	1001144433	1	Decal - No Weight SkyGuard	

FIGURE 5-27. SKYLINE INSTALLATION

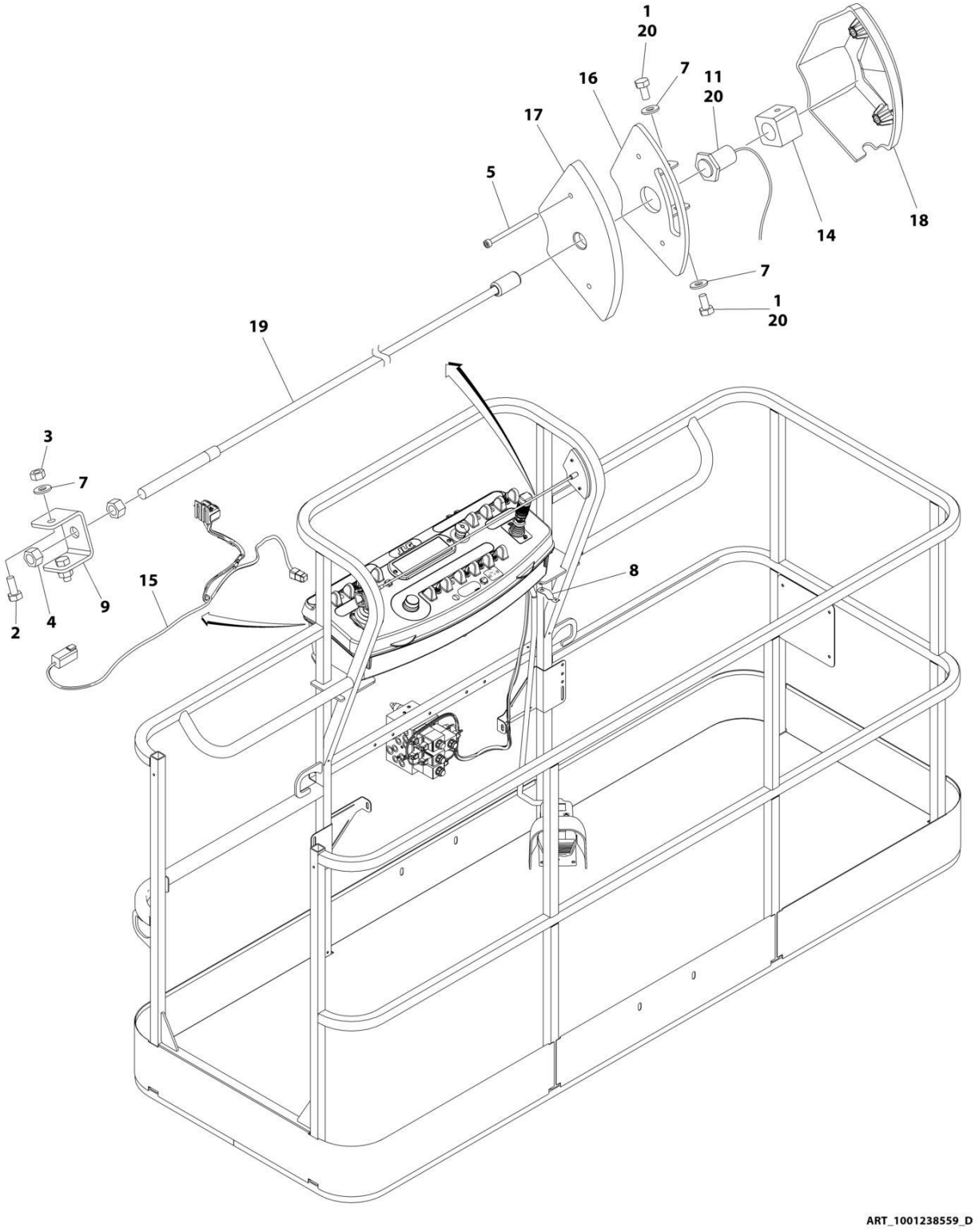

FIGURE 5-27. SKYLINE INSTALLATION

ITEM	PART NUMBER	QTY	DESCRIPTION	REV
	1001238559	Ref	SKYLINE INSTALLATION	D
1	0641404	2	Bolt 1/4 x 1/2	
2	0641405	2	Bolt 1/4 x 5/8	
3	3311405	2	Nut 1/4	
4	3311601	2	Nut 3/8	
5	4031516	2	Capscrew M4 x 60	
6	4240033	AR	Tie-Strap (Not Shown)	
7	4711400	4	Washer 1/4	
8	1001120328	1	Mount	
9	1001232642	1	Bracket	
11	1001232667	1	Sensor, Proximity	
14	1001236552	1	Block	
15	1001238418	1	Harness, Skyline (See Separate Breakdown in ELECTRICAL Section)	
16	1001238472	1	Mount	
17	1001254473	1	Housing, LH	
18	1001241965	1	Housing, RH	
19	1001254472	1	Rod	
20	0100011	AR	Compound, Locking	

FIGURE 5-28. STORAGE TRAY INSTALLATION - CENTER

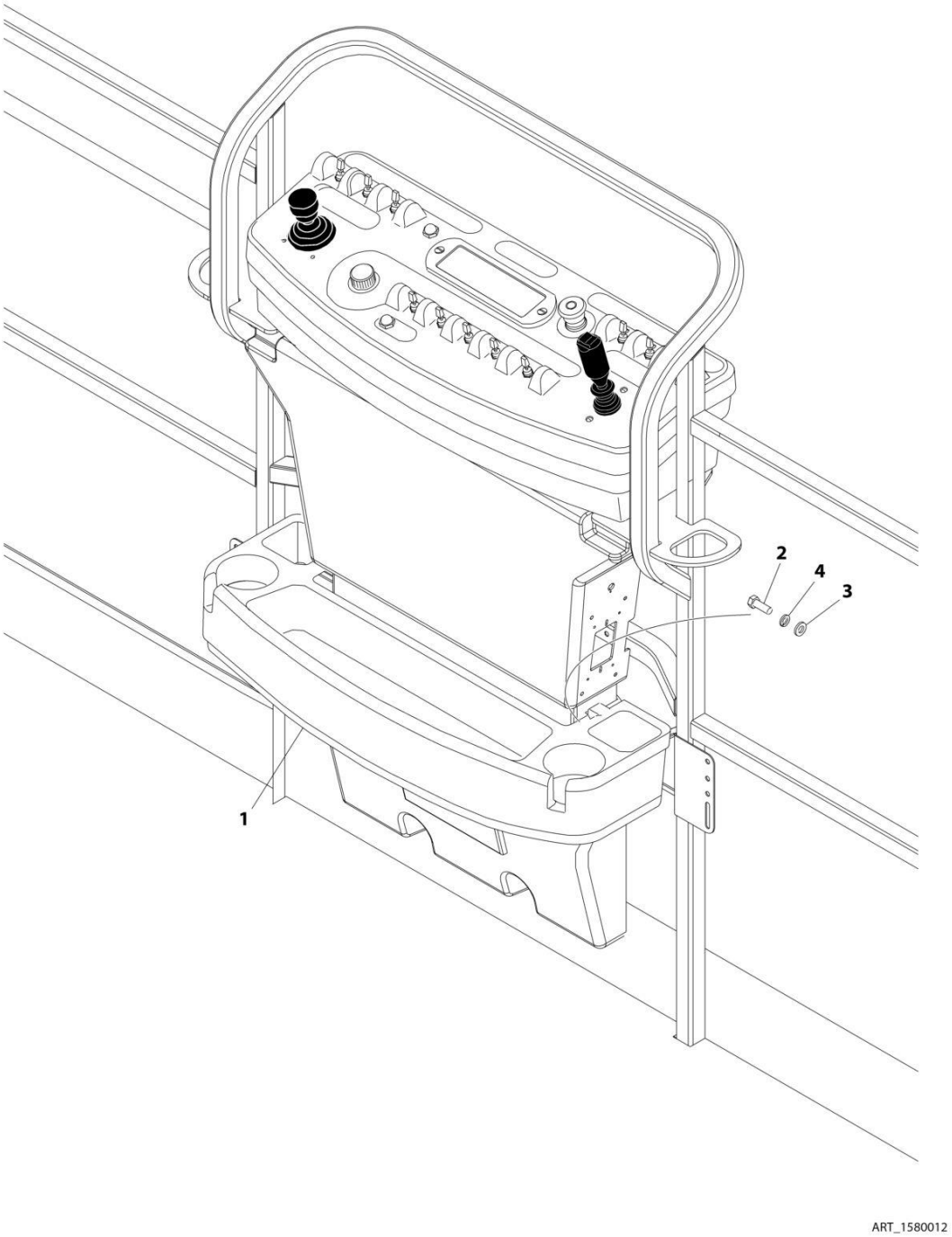

FIGURE 5-28. STORAGE TRAY INSTALLATION - CENTER

ITEM	PART NUMBER	QTY	DESCRIPTION	REV
	1580012	Ref	TRAY ASSEMBLY	C
1	See Note	NSS	Tray, Storage (Center) (Note: Purchase p/n 1580012)	
2	0641406	2	Bolt 1/4 x 3/4	
3	4751400	2	Washer 1/4	
4	4761400	2	Washer 1/4	

FIGURE 5-29. MANUAL STORAGE BOX INSTALLATION

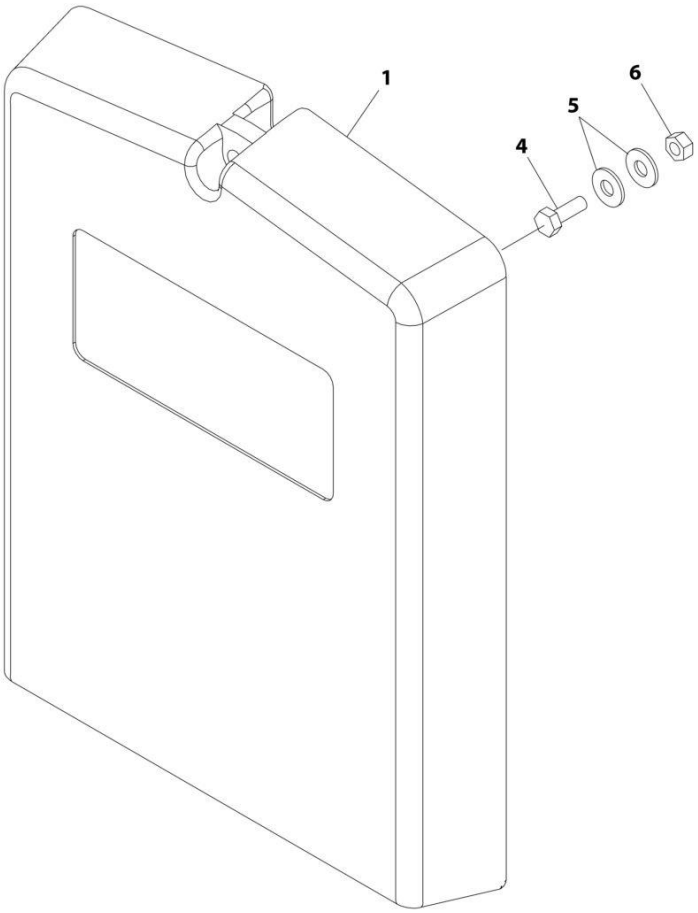

ART_0258671

FIGURE 5-29. MANUAL STORAGE BOX INSTALLATION

ITEM	PART NUMBER	QTY	DESCRIPTION	REV
	0258671	Ref	MANUAL STORAGE BOX INSTALLATION	C
1	0860520	1	Box, Manual Storage	
4	0641406	4	Bolt 1/4 x 3/4	
5	4751400	8	Washer 1/4	
6	3311405	4	Nut 1/4	

FIGURE 5-30. SKYCUTTER INSTALLATION

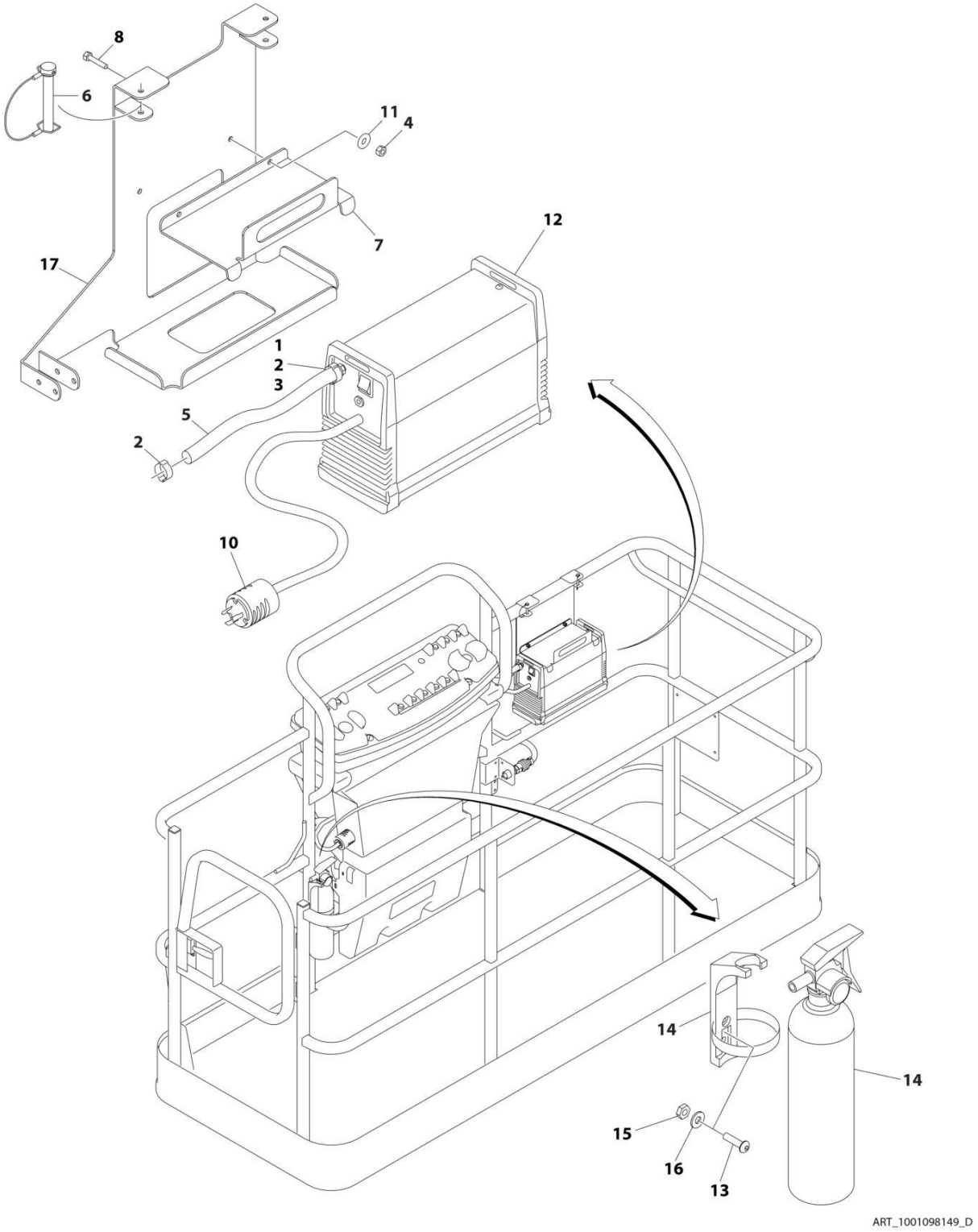

FIGURE 5-30. SKYCUTTER INSTALLATION

ITEM	PART NUMBER	QTY	DESCRIPTION	REV
	1001098149	Ref	SKYCUTTER INSTALLATION	D
		Ref	Note: When replacing platform on machines with SkyCutter option, new bracket p/n 1001145405 must be purchased to accommodate SkyCutter components.	
1	0100020	AR	Sealant	
2	1320177	2	Clamp, Hose	
3	2180832	1	Fitting, NPT/Barbed	
4	3290605	2	Nut M6	
5	2720160	3 ft /.9m	Hose	
6	3421453	3	Pin	
7	3576799	1	Plate, Hold-Down	
8	4010608	2	Screw M6 x 16	
10	4460971	1	Plug, Twistlock	
11	4811700	2	Washer M6	
12	1001098012	1	Plasma Cutter Assembly (See Separate Breakdown in this Section)	
13	0630518	2	Screw #10 x 3/4	
14	2030010	1	Extinguisher, Fire	
15	3311005	2	Nut #10	
16	4751000	2	Washer #10	
17	1001145405	1	Support	

FIGURE 5-31. SKYWELDER/SKYCUTTER COMBO INSTALLATION (60HZ)

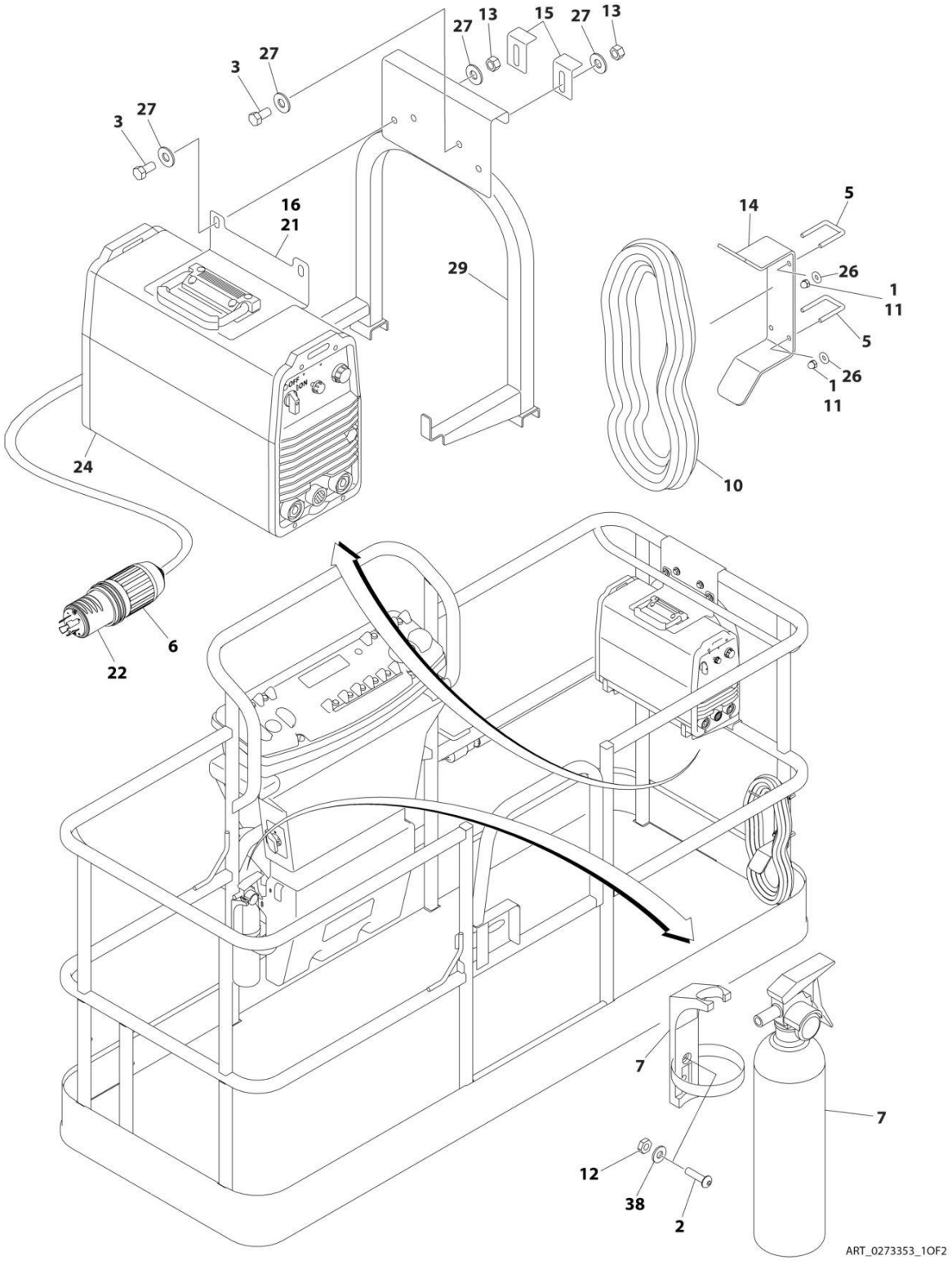

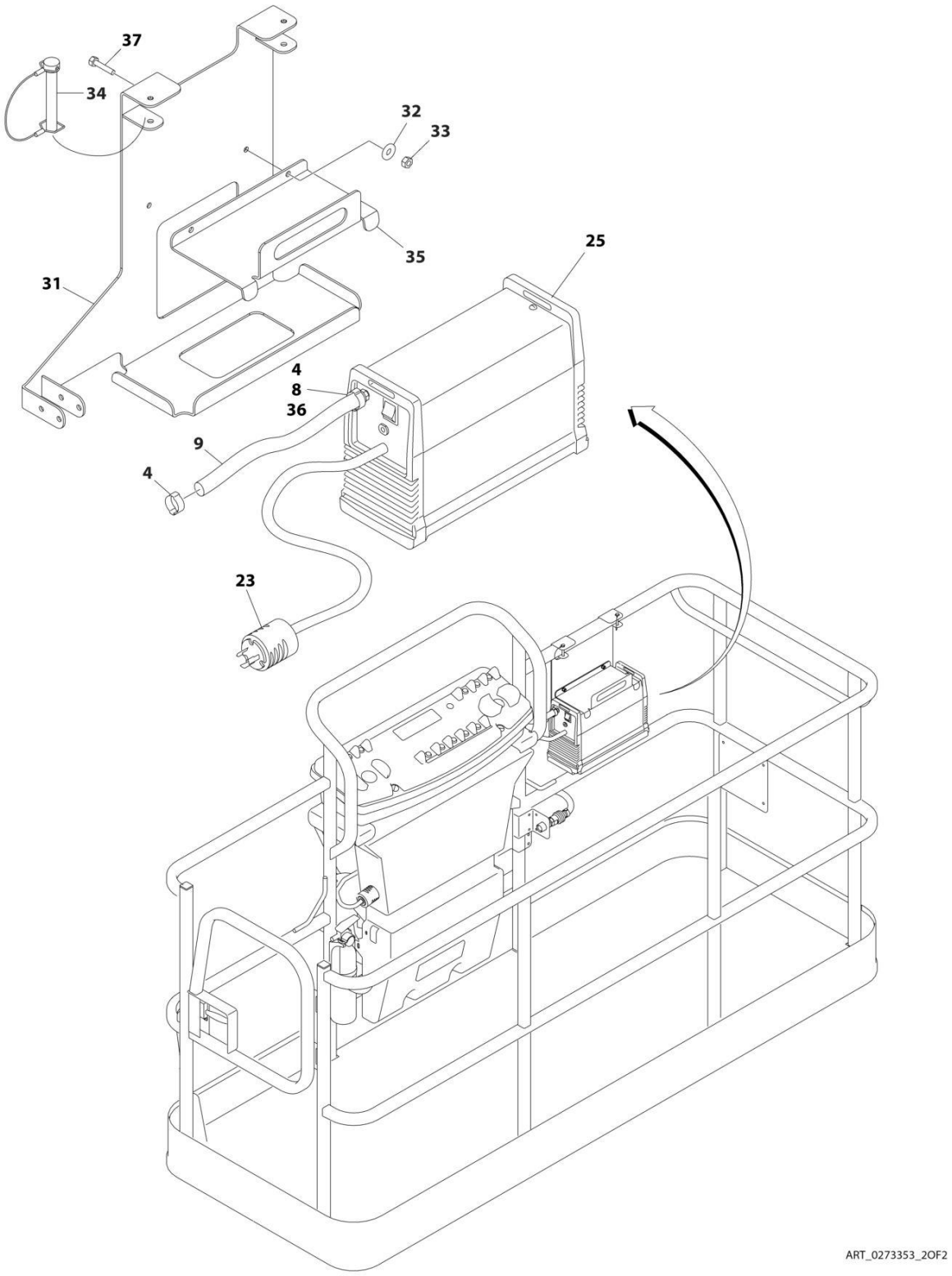
37
34
32
33
35
25
31
4
8
36
9
4
23
ART_0273353_2OF2

FIGURE 5-31. SKYWELDER/SKYCUTTER COMBO INSTALLATION (60HZ)

ITEM	PART NUMBER	QTY	DESCRIPTION	REV
	0273353	Ref	SKYWELDER/SKYCUTTER COMBO INSTALLATION (60HZ)	G
1	0100011	AR	Compound, Locking	
2	0630518	2	Screw #10 x 3/4	
3	0641606	4	Bolt 3/8 x 3/4	
4	1320177	2	Clamp	
5	1320302	2	Clamp	
6	1671093	1	Cover, Plug	
7	2030010	1	Extinguisher, Fire	
8	2180832	1	Fitting, Barbed/NPT	
9	2720160	4.5 ft /1.37m	Hose	
10	2902217	1	Weld Leads Kit	
11	3300151	4	Nut 1/4	
12	3311005	2	Nut #10	
13	3311605	4	Nut 3/8	
14	3573400	1	Bracket	
15	3577121	2	Angle	
16	3573642	1	Plate	
20	4240099	AR	Tie-Strap (Not Shown)	
21	4420037	2.36 ft /.71m	Tape	
22	4460962	1	Plug, Twist Lock	
23	4460971	1	Plug, Twist Lock	
24	4530028	1	Welder Assembly (See Separate Breakdown in this section)	
25	1001098012	1	Plasma Cutter Assembly (See Separate Breakdown in this Section)	
26	4751400	4	Washer 1/4	
27	4751600	8	Washer 3/8	
29	4846627	1	Support	
31	1001145405	1	Bracket	
32	4811700	2	Washer M6	
33	3290605	2	Nut M6	
34	3421453	3	Pin	
35	3576799	1	Plate, Hold-Down	
36	0100020	1	Sealant	
37	4010608	2	Screw M6 x 16	
38	4751000	2	Washer #10	

FIGURE 5-32. PLASMA CUTTER ASSEMBLY

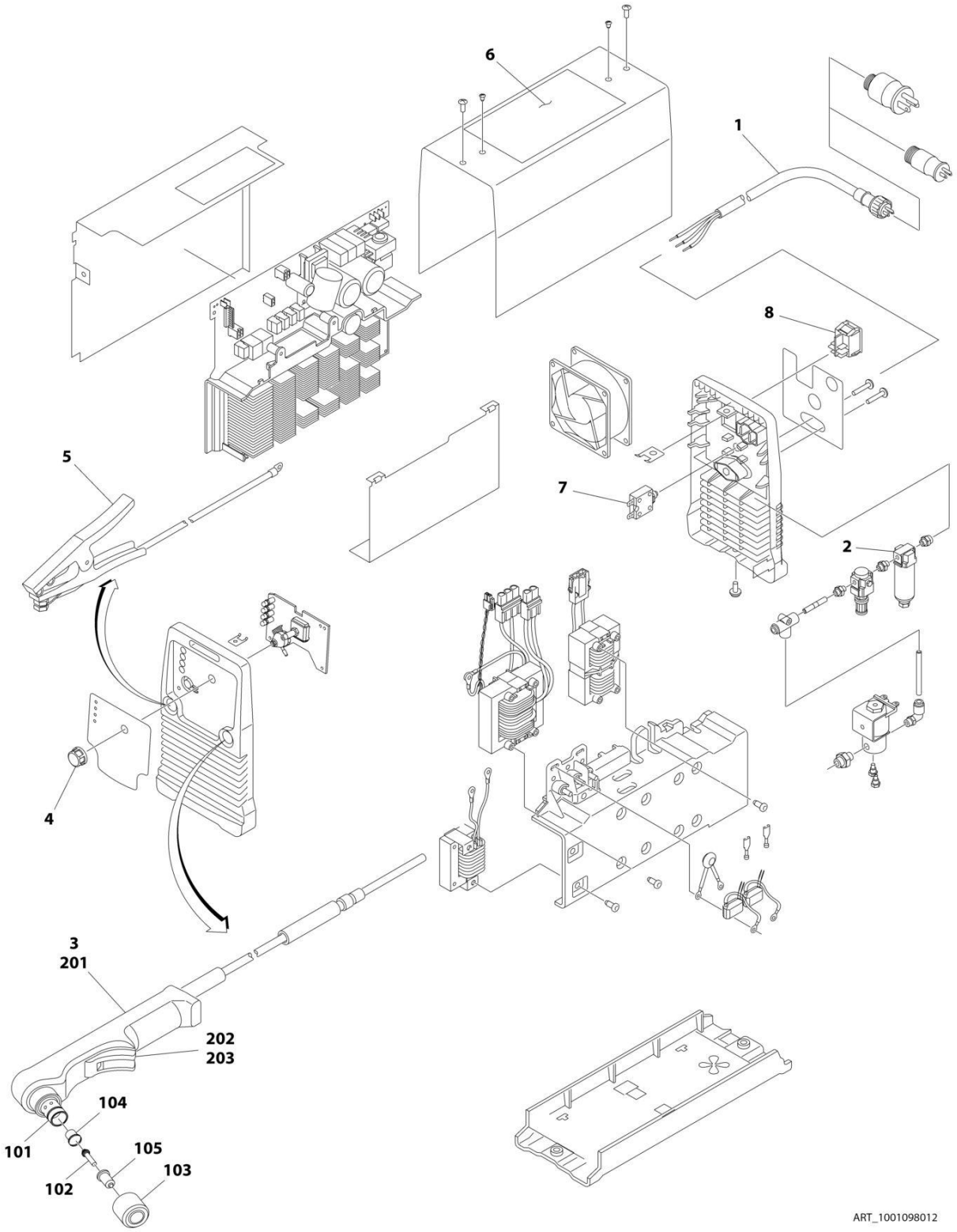

FIGURE 5-32. PLASMA CUTTER ASSEMBLY

ITEM	PART NUMBER	QTY	DESCRIPTION	REV
	1001098012	Ref	PLASMA CUTTER ASSEMBLY	A
		Ref	Note: For Other Components, contact your Miller Welder Dealer.	
1	70001424	1	Cable, Power	
1	70001425	1	Decal - Voltage Warning	
2	70001427	1	Filter, Regulator	
3	70001428	1	Torch Assembly (See Items 101-203 for Breakdown)	
4	7024471	1	Knob	
5	70001429	1	Clamp with Cable	
6	70001430	1	Decal - Caution	
7	70001431	1	Breaker, Circuit	
8	70001432	1	Switch, Rocker	
	70001428	Ref	TORCH ASSEMBLY	
101	7024530	1	O-Ring	
102	7024531	1	Electrode	
103	7024532	1	Cup, Retaining	
104	7024533	1	Swirl Ring	
105	7024534	1	Tip	
201	7024535	1	Handle, Torch	
202	7024536	1	Switch	
203	7024537	1	Trigger	

FIGURE 5-33. SKYWELDER INSTALLATION (50HZ)

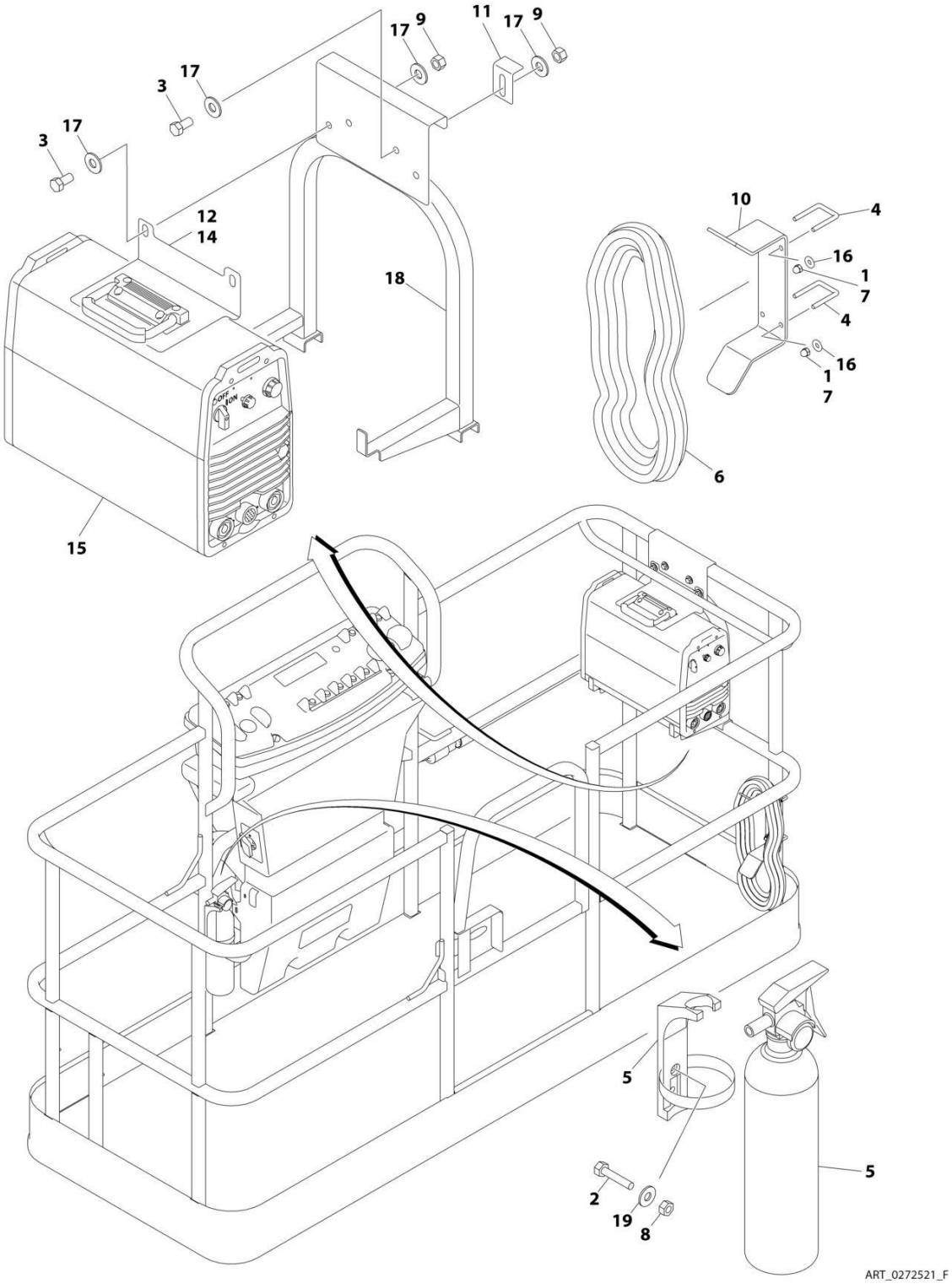

FIGURE 5-33. SKYWELDER INSTALLATION (50HZ)

ITEM	PART NUMBER	QTY	DESCRIPTION	REV
	0272521	Ref	SKYWELDER INSTALLATION	F
1	0100011	AR	Compound, Locking	
2	0630518	2	Screw #10 x 3/4	
3	0641606	4	Bolt 3/8 x 3/4	
4	1320302	2	U-Clamp	
5	2030010	1	Extinguisher, Fire	
6	2902217	1	Weld Leads Kit	
7	3300151	4	Nut 1/4	
8	3311005	2	Nut #10	
9	3311605	4	Nut 3/8	
10	3573400	1	Bracket	
11	3577121	2	Angle	
12	3573642	1	Plate	
13	4240099	AR	Tie-Strap (Not Shown)	
14	4420037	AR	Tape	
15	4530028	1	Welder Assembly (See Separate Breakdown in this Section)	
16	4751400	4	Washer 1/4	
17	4751600	8	Washer 3/8	
18	4846627	1	Support	
19	4751000	2	Washer #10	

FIGURE 5-34. SKYWELDER INSTALLATION (60HZ)

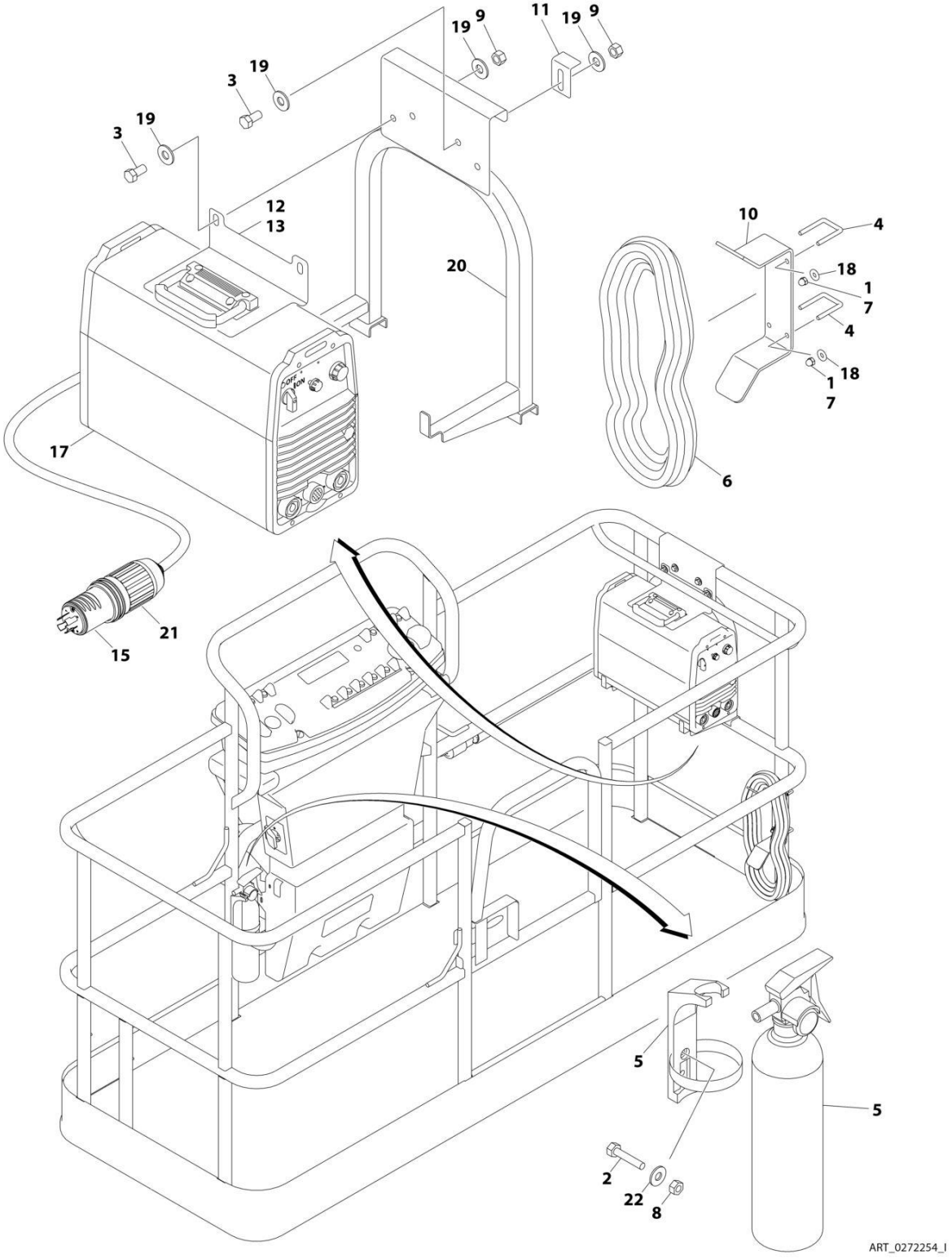

FIGURE 5-34. SKYWELDER INSTALLATION (60HZ)

ITEM	PART NUMBER	QTY	DESCRIPTION	REV
	0272254	Ref	SKYWELDER INSTALLATION	I
1	0100011	AR	Compound, Locking	
2	0630518	2	Screw #10 x 3/4	
3	0641606	4	Bolt 3/8 x 3/4	
4	1320302	2	U-Clamp	
5	2030010	1	Extinguisher, Fire	
6	2902217	1	Weld Leads Kit	
7	3300151	4	Nut 1/4	
8	3311005	2	Nut #10	
9	3311605	4	Nut 3/8	
10	3573400	1	Bracket	
11	3577121	2	Angle	
12	3573642	1	Plate	
13	4420037	AR	Tape	
14	4240099	AR	Tie-Strap (Not Shown)	
15	4460962	1	Plug, Male Twistlock	
17	4530028	1	Welder Assembly (See Separate Breakdown in this Section)	
18	4751400	4	Washer 1/4	
19	4751600	8	Washer 3/8	
20	4846627	1	Support	
21	1671093	1	Cover, Plug	
22	4751000	2	Washer #10	

FIGURE 5-35. WELDER ASSEMBLY

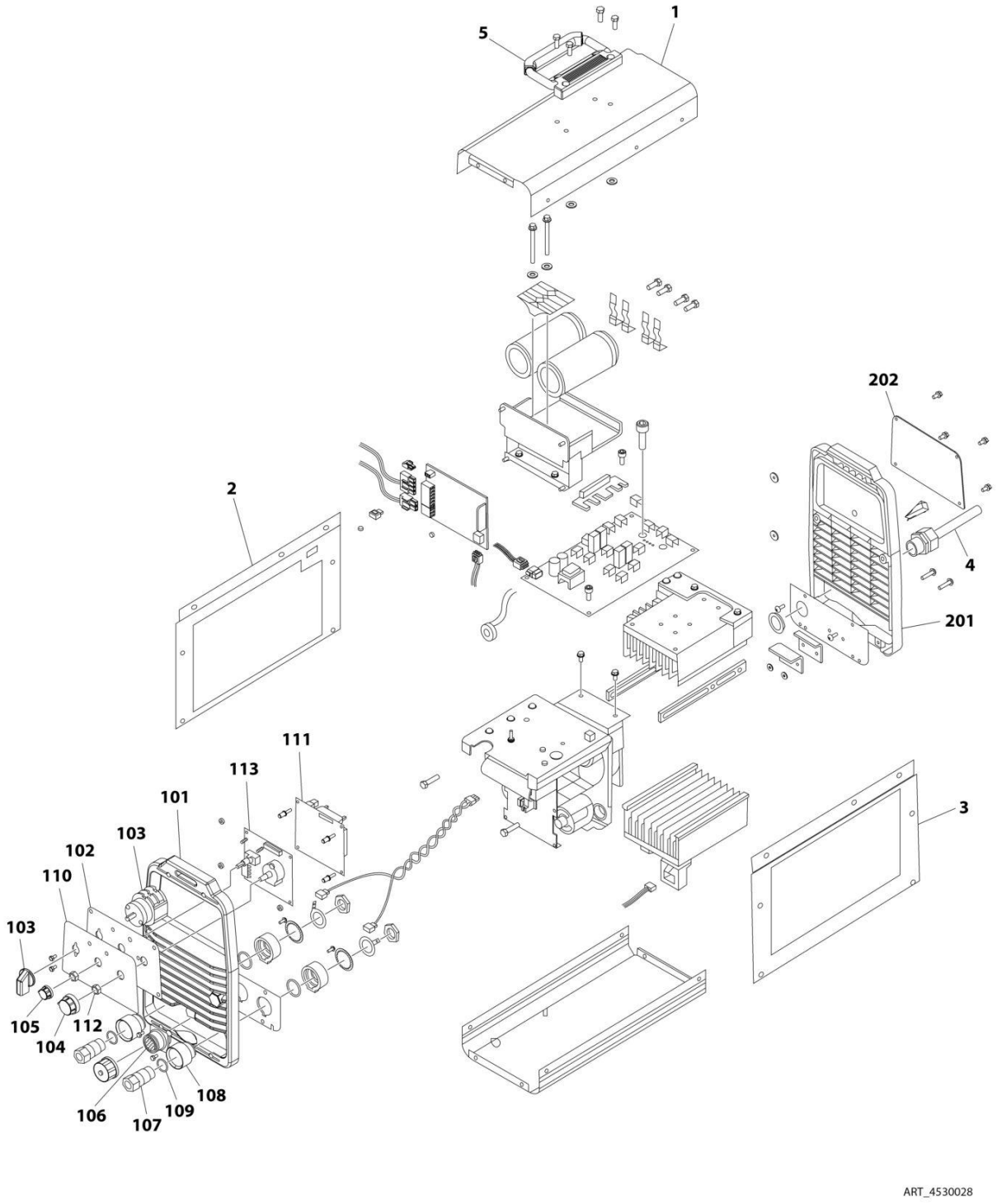

FIGURE 5-35. WELDER ASSEMBLY

ITEM	PART NUMBER	QTY	DESCRIPTION	REV
	4530028	Ref	WELDER ASSEMBLY	B
		Ref	Note: For Other Components, contact your Miller Welder Dealer.	
1	7027773	1	Cover, Top	
1	7027774	1	Decal - Static Precautionary Warning	
2	See Note	NSS	Panel, LH Side (Note: Part of Item 1. Purchase Item 1)	
3	See Note	NSS	Panel, RH Side (Note: Part of Item 1. Purchase Item 1)	
4	7024467	1	Cable, Power	
4	7027775	1	Decal - Electrical Shock Warning (Not Shown)	
5	7027776	1	Handle, Carrying	
101	7024462	1	Panel, Front	
102	7024463	1	Panel, Console	
103	7024469	1	Switch with Lead	
104	7024470	1	Knob	
105	7024471	1	Knob	
106	7024472	1	Receptacle with Leads and Plugs	
107	7024473	2	Receptacle, Twistlock Female	
108	7024474	2	Insulator	
109	7024475	2	O-Ring	
110	7027777	1	Nameplate	
111	7027779	1	Circuit Card Assembly (Process Control)	
112	7024478	2	Nut	
113	7027778	1	Circuit Card Assembly (Operator Interface)	
201	7024462	1	Panel, Rear	
202	7027780	1	Panel, Cover	

FIGURE 5-36. SKYWELDER PREP PACKAGE (60HZ)

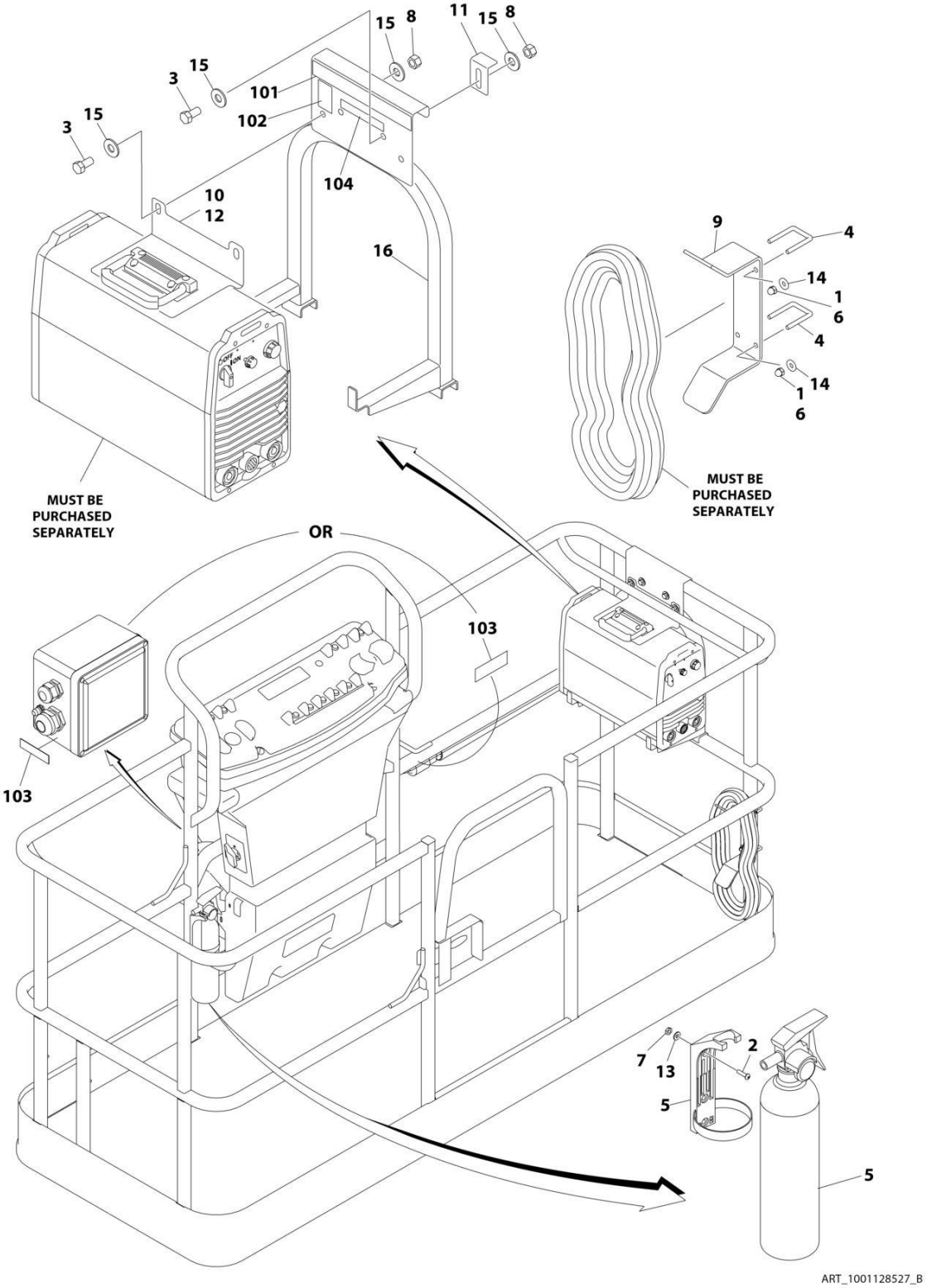

FIGURE 5-36. SKYWELDER PREP PACKAGE (60HZ)

ITEM	PART NUMBER	QTY	DESCRIPTION	REV
	1001128527	Ref	SKYWELDER PREP PACKAGE	B
1	0100011	AR	Compound, Locking	
2	0630518	2	Screw #10 x 3/4	
3	0641606	4	Bolt 3/8 x 3/4	
4	1320302	2	U-Clamp	
5	2030010	1	Extinguisher, Fire	
6	3300151	4	Nut 1/4	
7	3311005	2	Nut #10	
8	3311605	4	Nut 3/8	
9	3573400	1	Bracket	
10	3573642	1	Plate	
11	3577121	2	Angle	
12	4420037	AR	Tape	
13	4751000	2	Washer #10	
14	4751400	4	Washer 1/4	
15	4751600	8	Washer 3/8	
16	4846627	1	Support	
	1001128556	Ref	SKYWELDER DECAL INSTALLATION	C
101	1702868	1	Decal - No Hands	
102	1705305	1	Decal - Weld Lead	
103	1705375	1	Decal - 240V - 3 Phase - 60Hz	
104	1001228988	1	Decal - Weight	

FIGURE 5-37. SKYWELDER LOCKING BRACKET INSTALLATION (OPTIONAL)

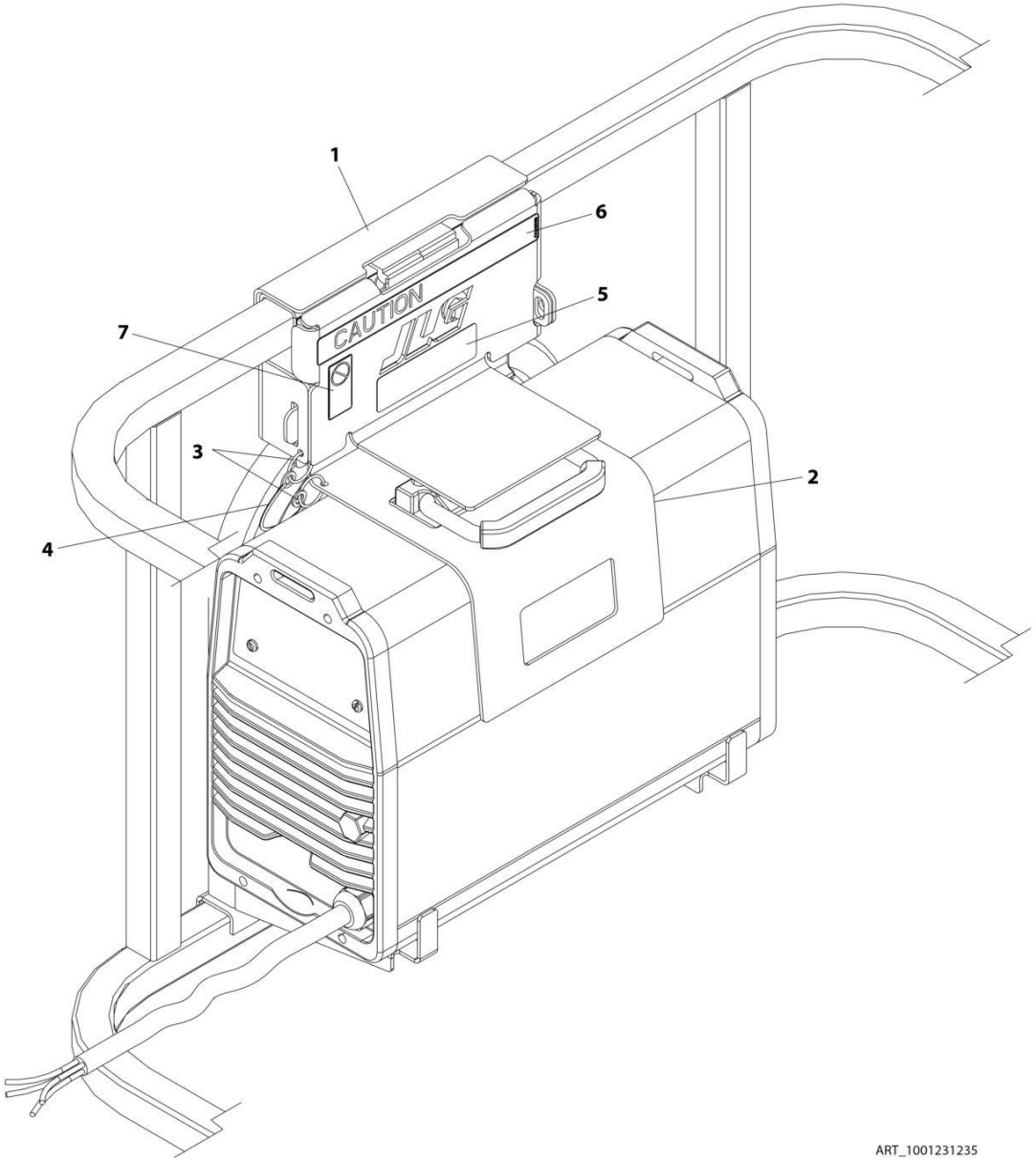

FIGURE 5-37. SKYWELDER LOCKING BRACKET INSTALLATION (OPTIONAL)

ITEM	PART NUMBER	QTY	DESCRIPTION	REV
	1001231235	Ref	SKYWELDER LOCKING BRACKET INSTALLATION	A
1	1001231180	1	Bracket	
2	1001231183	1	Plate	
3	3760170	2	Ring	
4	1060379	1	Lanyard	
5	1001228988	1	Decal - Weight	
6	1702868	1	Decal - No Hands	
7	1705305	1	Decal - Weld Lead	

FIGURE 5-38. SKYGLAZIER INSTALLATION (ALL SPECS EXCEPT CHINA AND JAPANESES SPECS)

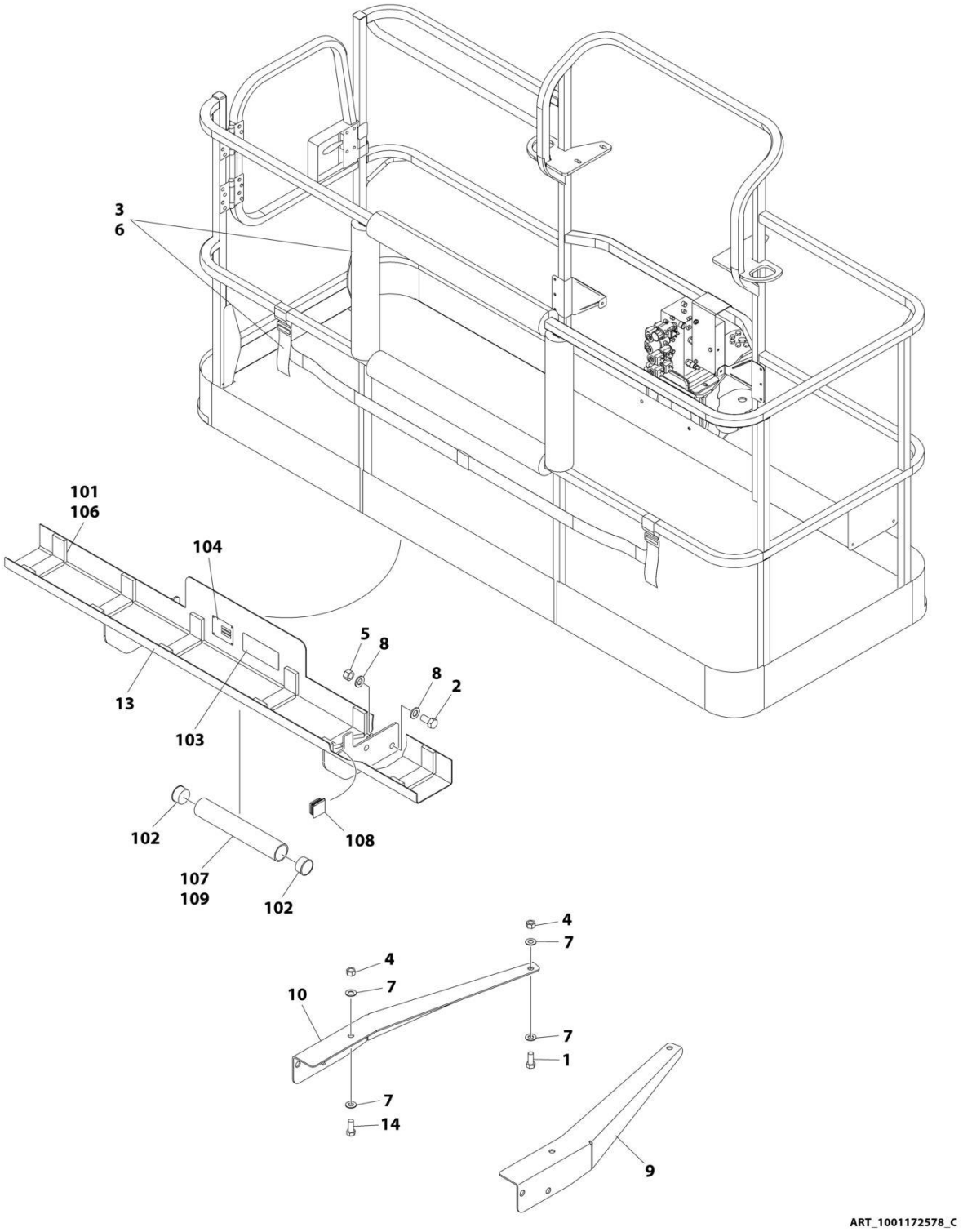

FIGURE 5-38. SKYGLAZIER INSTALLATION (ALL SPECS EXCEPT CHINA AND JAPANESES SPECS)

ITEM	PART NUMBER	QTY	DESCRIPTION	REV
	1001172578	Ref	SKYGLAZIER INSTALLATION	C
1	0642012	2	Bolt 5/8 x 1-1/2	
2	0642212	4	Bolt 3/4 x 1-1/2	
3	2902212	1	Bumpers and Strap Kit	
3	0940102	1	Bumper Only	
3	4240149	1	Strap Only	
4	3312005	1	Nut 5/8	
5	3312205	4	Nut 3/4	
6	4420014	AR	Tape	
7	4712000	6	Washer 5/8	
8	4712200	8	Washer 3/4	
9	1001099366	1	Support	
10	1001099367	1	Support	
13	1001172577	1	Tray Assembly (See Items 101-109 for Breakdown)	
14	8310129	2	Bolt 3/4 x 2-1/2	
	1001172577	Ref	TRAY ASSEMBLY	C
101	0100081	AR	Adhesive	
102	1120555	2	Cap, Tube	
103	1701509	1	Decal - Manual	
104	See Note	NSS	Nameplate - Serial Number (Note: Not Available for Purchase)	
106	3340956	1	Pad Kit	
107	3460334	1	Tube	
108	3520071	2	Plug	
109	4420066	AR	Tape, Double Sided	

FIGURE 5-39. SKYGLAZIER INSTALLATION (ENGLISH LANGUAGE DECALS)

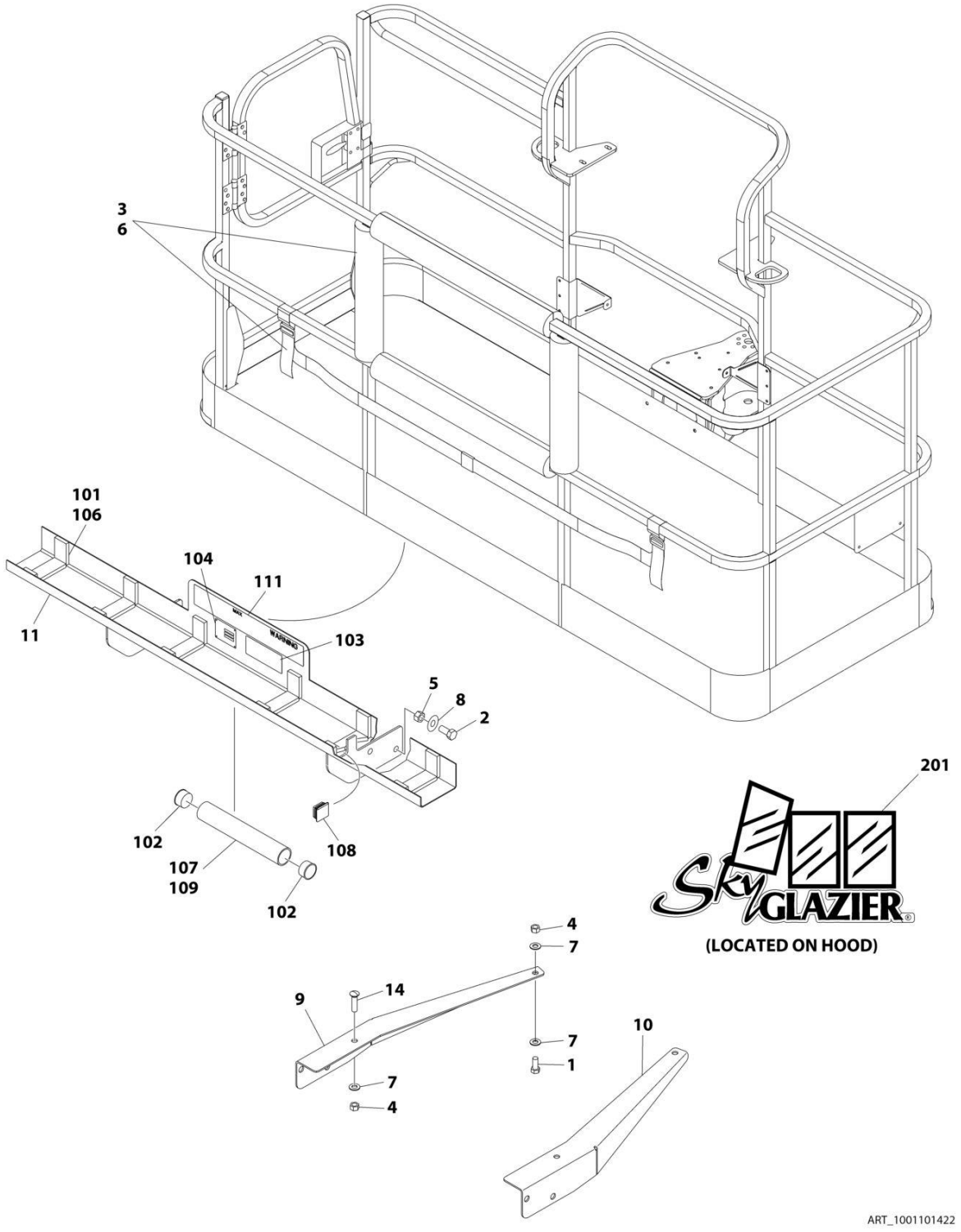

FIGURE 5-39. SKYGLAZIER INSTALLATION (ENGLISH LANGUAGE DECALS)

ITEM	PART NUMBER	QTY	DESCRIPTION	REV
	1001101422	Ref	SKYGLAZIER INSTALLATION	C
1	0642012	2	Bolt 5/8 x 1-1/2	
2	0642212	4	Bolt 3/4 x 1-1/2	
3	2902212	1	Bumpers and Strap Kit	
3	0940102	1	Bumper Only	
3	4240149	1	Strap Only	
4	3312005	4	Nut 5/8	
5	3312205	4	Nut 3/4	
6	4420014	AR	Tape	
7	4712000	6	Washer 5/8	
8	4712200	8	Washer 3/4	
9	1001099366	1	Support	
10	1001099367	1	Support	
11	1001101421	1	Tray Assembly (See Items 101-111 for Breakdown)	
14	8310129	2	Bolt 3/4 x 2-1/2	
	1001101421	Ref	TRAY ASSEMBLY	F
101	0100081	AR	Adhesive	
102	1120555	2	Cap, Tube	
103	1701509	1	Decal - Manual	
104	See Note	NSS	Nameplate - Serial Number (Note: Not Available for Purchase)	
106	3340956	1	Pad Kit	
107	3460334	1	Tube	
108	3520071	2	Plug	
109	4420066	AR	Tape, Double Sided	
111	1001163131	2	Decal - Glazier Capacity	
	0272418	Ref	SKYGLAZIER DECAL INSTALLATION	4
201	1705358	2	Decal - SkyGlazier	

FIGURE 5-40. PIPE RACKS INSTALLATION (ANSI AND CSA SPECS)

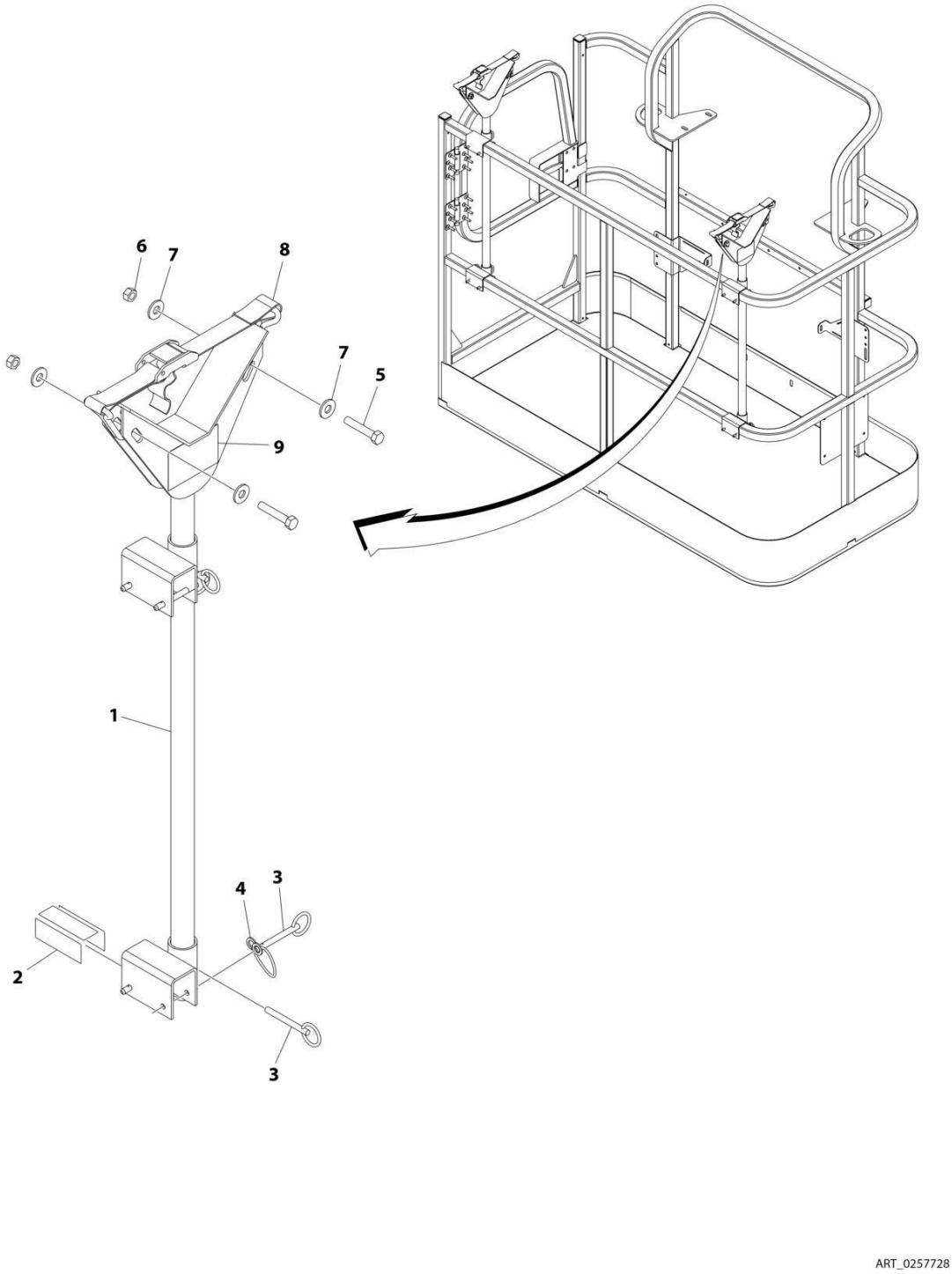

FIGURE 5-40. PIPE RACKS INSTALLATION (ANSI AND CSA SPECS)

ITEM	PART NUMBER	QTY	DESCRIPTION	REV
	0257728	Ref	PIPE RACK INSTALLATION	3/E
1	4845582	2	Rack, Pipe	
2	4420062	AR	Tape	
3	3422661	10	Pin	
4	1060379	4	Lanyard	
5	0641514	4	Bolt 5/16 x 1-3/4	
6	3311505	4	Nut 5/16	
7	4751500	8	Washer 5/16	
8	0480100	2	Tie-Down	
11	1001252946	2	Decal - Tube Rack Cap (1)	
12	1001252947	2	Decal - Tube Rack Cap (2)	

FIGURE 5-41. PIPE RACKS INSTALLATION (ANSI EXPORT SPECS)

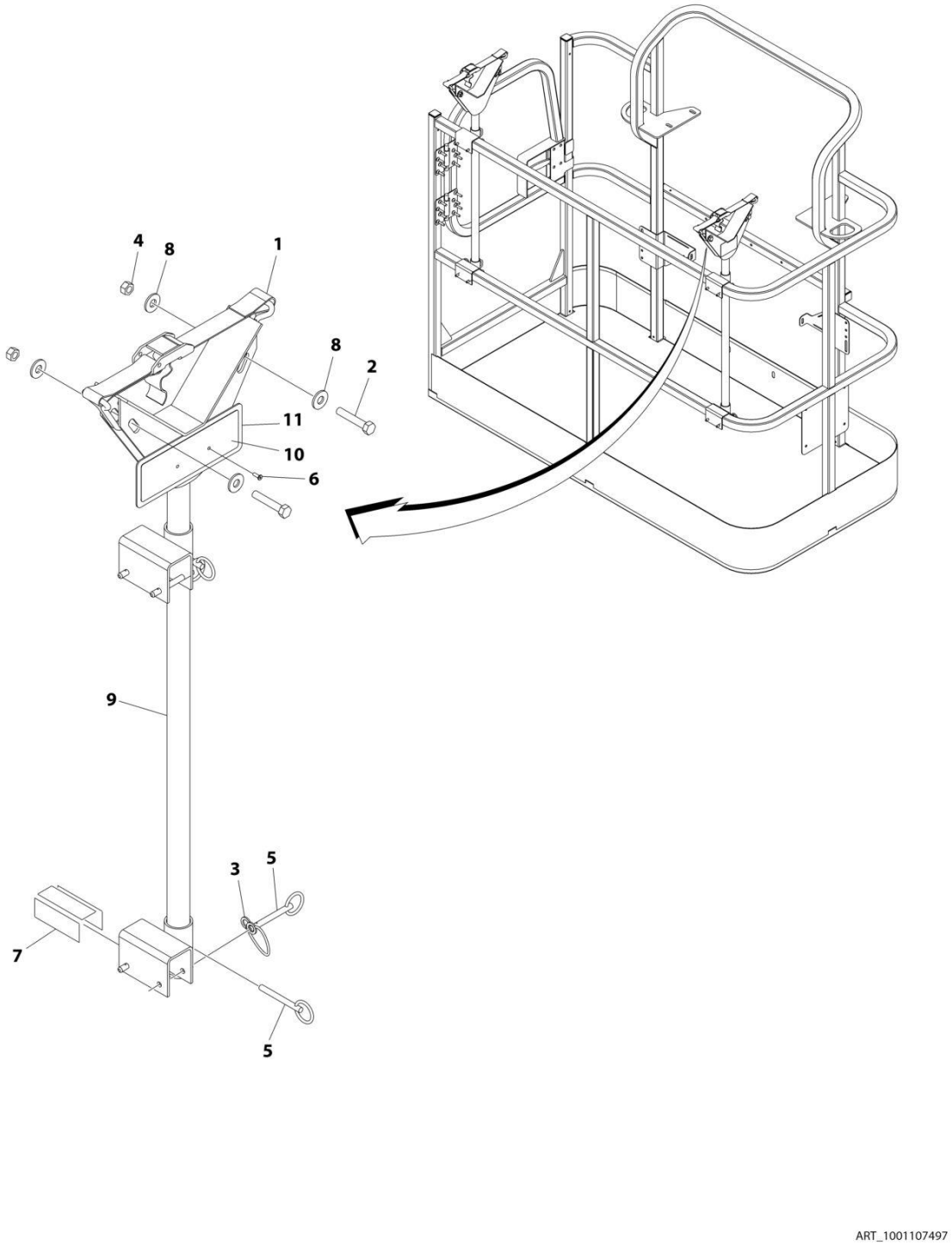

FIGURE 5-41. PIPE RACKS INSTALLATION (ANSI EXPORT SPECS)

ITEM	PART NUMBER	QTY	DESCRIPTION	REV
	1001107497	Ref	PIPE RACK INSTALLATION	A
1	4845582	2	Rack, Pipe	
2	4420062	AR	Tape	
3	3422661	10	Pin	
4	1060379	4	Lanyard	
5	0641514	4	Bolt 5/16 x 1-3/4	
6	3311505	4	Nut 5/16	
7	4751500	8	Washer 5/16	
8	0480100	2	Tie-Down	
9	1001106450	2	Decal - Capacity	
10	3820001	4	Rivet	
11	1001107469	2	Plate, Mounting	

FIGURE 5-42. PIPE RACKS INSTALLATION (AUSTRALIAN SPECS)

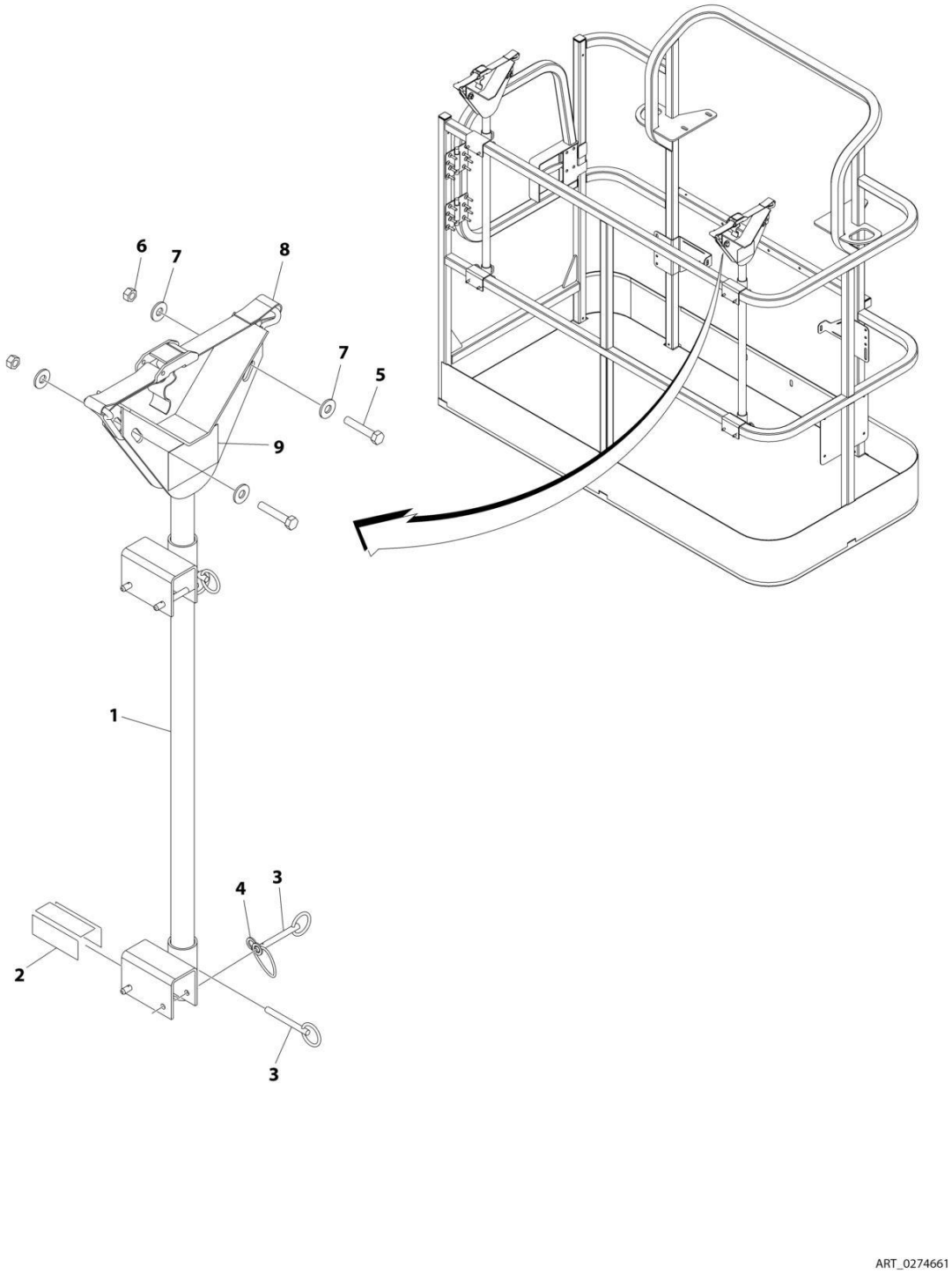

FIGURE 5-42. PIPE RACKS INSTALLATION (AUSTRALIAN SPECS)

ITEM	PART NUMBER	QTY	DESCRIPTION	REV
	0274661	Ref	PIPE RACK INSTALLATION	3/C
1	4845582	2	Rack, Pipe	
2	4420062	AR	Tape	
3	3422661	10	Pin	
4	1060379	4	Lanyard	
5	0641514	4	Bolt 5/16 x 1-3/4	
6	3311505	4	Nut 5/16	
7	4751500	8	Washer 5/16	
8	0480100	2	Tie-Down	
9	1706510	2	Decal - Capacity	

FIGURE 5-43. SOFT TOUCH SYSTEM INSTALLATION - 6FT/1.83M PLATFORM

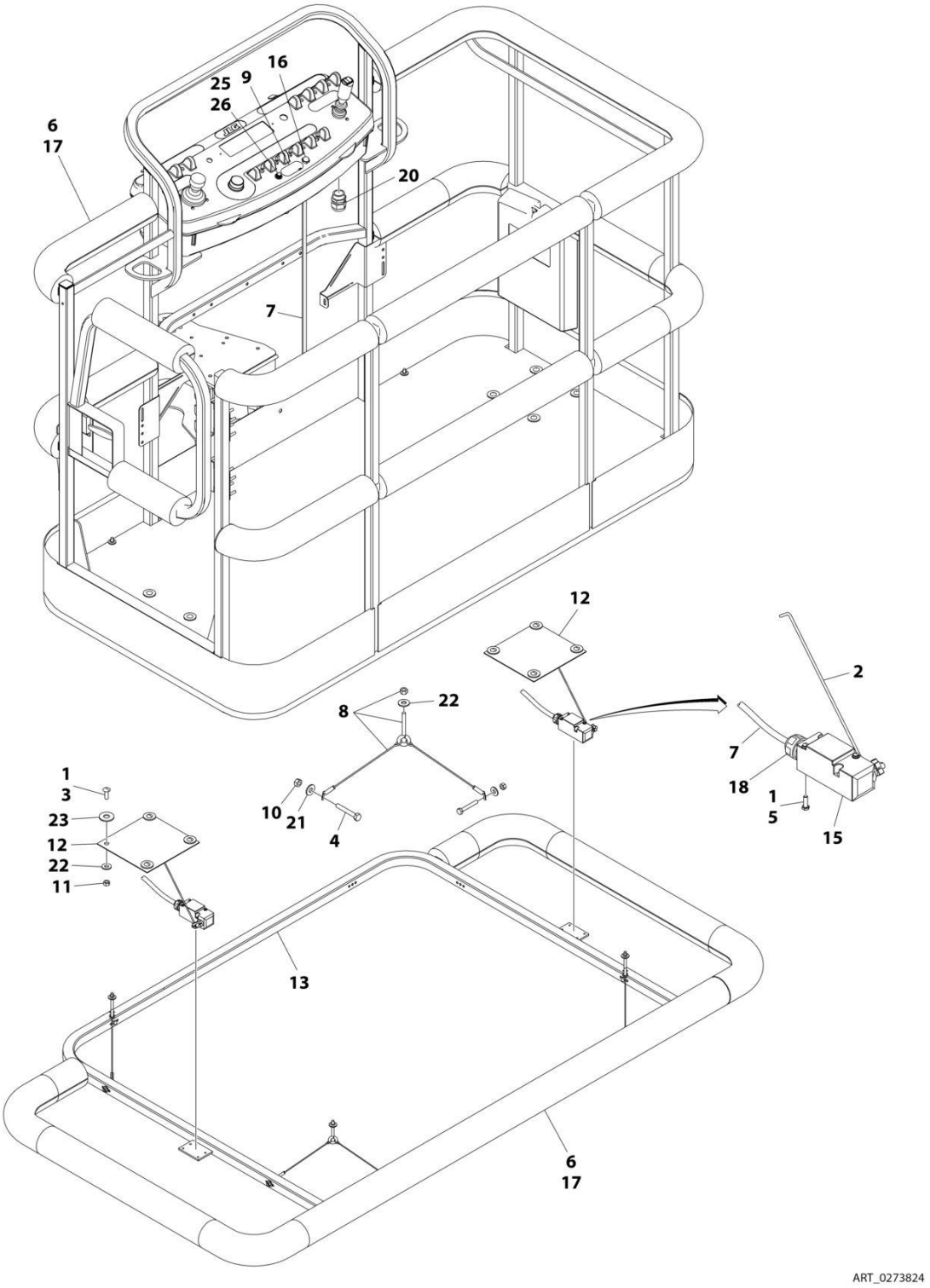

FIGURE 5-43. SOFT TOUCH SYSTEM INSTALLATION - 6FT/1.83M PLATFORM

ITEM	PART NUMBER	QTY	DESCRIPTION	REV
	0273824	Ref	SOFT TOUCH SYSTEM INSTALLATION	D
1	0100011	AR	Compound, Locking	
2	0200048	2	Arm, Switch	
3	0630462	8	Bolt	
4	0641414	8	Bolt 1/4 x 1-3/4	
5	0731005	4	Bolt #10 x 5/8	
6	0940134	1	Bumper Kit (Includes Corners and Enough Straight Material for One Platform)	
6	0940092	AR	Bumper (Corner)	
6	0940094	AR	Bumper (12ft Length)	
7	1060341	23 ft/7m	Cable, Soft Touch - 16/2	
8	1060903	4	Wire Rope and Eyebolt Assembly	
9	1702938	1	Decal - Soft Touch Override	
10	3311401	8	Nut 1/4	
11	3311501	8	Nut 5/16	
12	3575359	2	Plate, Switch Strike	
13	3641569	1	Rail, Soft Touch	
14	4240099	7	Tie-Strap (Not Shown)	
15	4360057	2	Switch, Limit	
16	4360387	1	Switch, Push Button	
17	4420068	AR	Tape, Adhesive	
17	1001197017	AR	Tie-Strap	
18	4460049	2	Connector, Strain Relief	
19	4460234	7	Tie-Strap (Not Shown)	
20	4460425	1	Connector, Strain Relief	
21	4751400	8	Washer 1/4	
22	4751500	12	Washer 5/16	
23	4751800	8	Washer 1/2	
24	4933218	1	Wiring Diagram (Not Shown - Reference Only)	
25	2920028	1	Light, Indicator	
26	2920029	1	Bulb, Light	

FIGURE 5-44. SOFT TOUCH SYSTEM INSTALLATION - 6FT/1.83M FALL ARREST PLATFORM

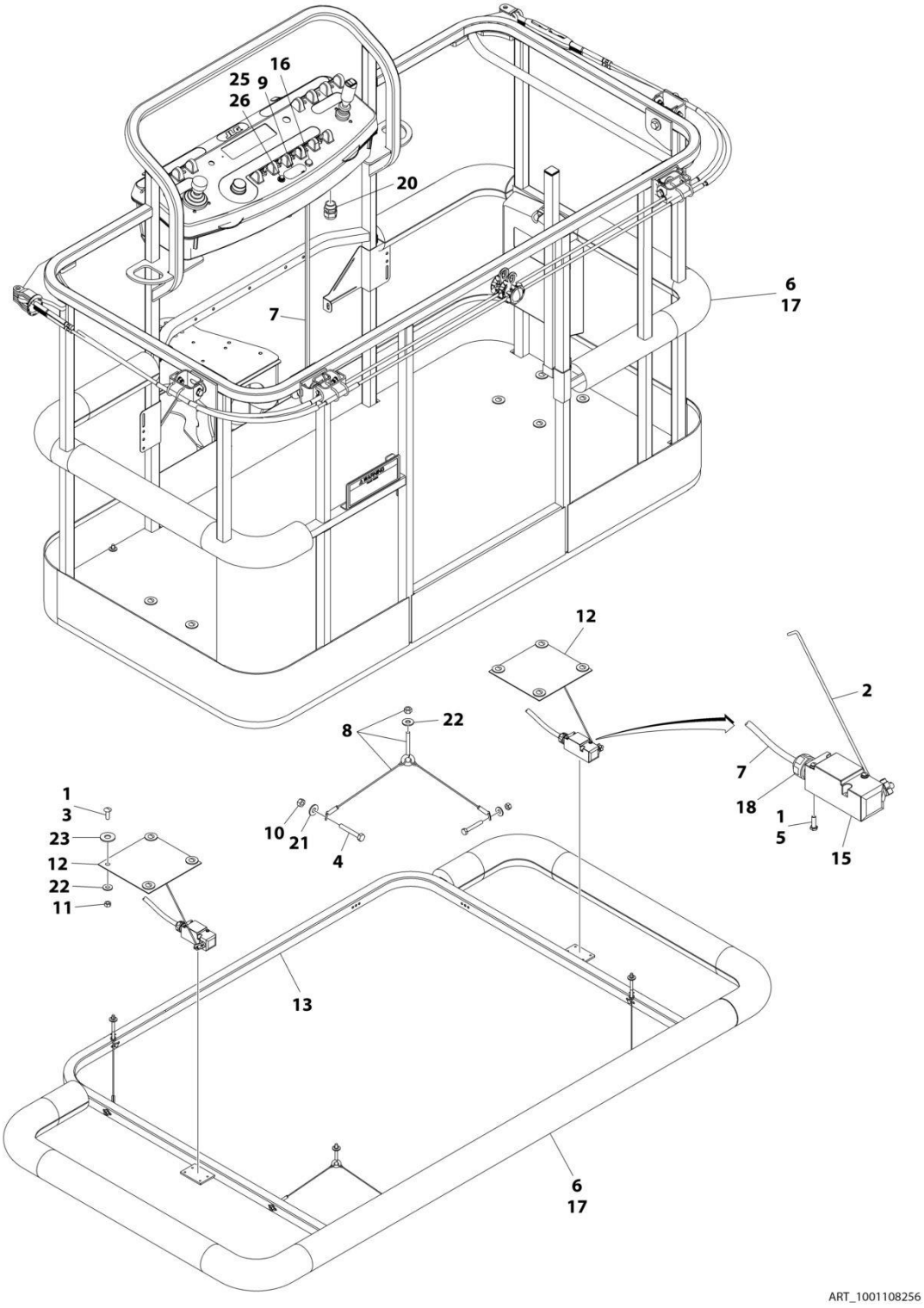

FIGURE 5-44. SOFT TOUCH SYSTEM INSTALLATION - 6FT/1.83M FALL ARREST PLATFORM

ITEM	PART NUMBER	QTY	DESCRIPTION	REV
	1001108256	Ref	SOFT TOUCH INSTALLATION	C
1	0100011	AR	Compound, Locking	
2	0200048	2	Arm, Switch	
3	0630462	8	Bolt	
4	0641414	8	Bolt 1/4 x 1-3/4	
5	0731005	4	Bolt #10 x 5/8	
6	0940177	1	Bumper Kit (Includes Corners and Enough Straight Material for One Platform)	
6	0940092	8	Bumper (Corner)	
6	0940094	AR	Bumper (12ft Length)	
7	1060341	23 ft/7m	Cable, Soft Touch - 16/2	
8	1060903	4	Wire Rope and Eyebolt Assembly	
9	1702938	1	Decal - Soft Touch Override	
10	3311401	8	Nut 1/4	
11	3311501	8	Nut 5/16	
12	3575359	2	Plate, Switch Strike	
13	3641569	1	Rail, Soft Touch	
14	4240099	7	Tie-Strap (Not Shown)	
15	4360057	2	Switch, Limit	
16	4360387	1	Switch, Push Button	
17	4420068	AR	Tape, Adhesive	
17	1001197017	AR	Tie-Strap	
18	4460049	2	Connector, Strain Relief	
19	4460234	7	Tie-Strap (Not Shown)	
20	4460425	1	Connector, Strain Relief	
21	4751400	8	Washer 1/4	
22	4751500	9	Washer 5/16	
23	4751800	8	Washer 1/2	
25	2920028	1	Light, Indicator	
26	2920029	1	Bulb, Light	

FIGURE 5-45. SOFT TOUCH SYSTEM INSTALLATION - 8FT/2.44M PLATFORM

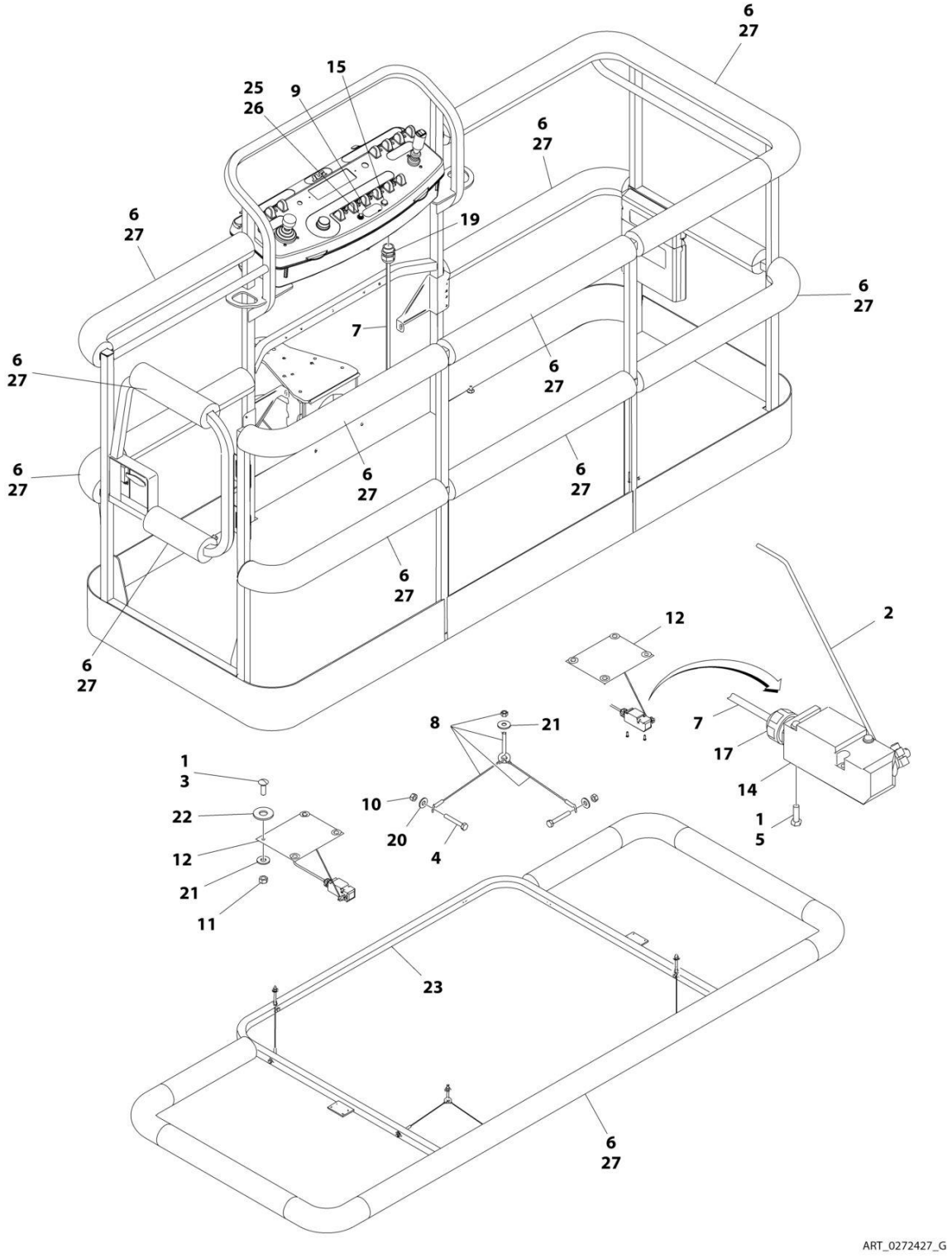

FIGURE 5-45. SOFT TOUCH SYSTEM INSTALLATION - 8FT/2.44M PLATFORM

ITEM	PART NUMBER	QTY	DESCRIPTION	REV
	0272427	Ref	SOFT TOUCH INSTALLATION - 36IN X 8FT (91.5CM X 2.44M) PLATFORM (OPTIONAL)	G
1	0100011	AR	Compound, Locking	
2	0200048	2	Arm, Switch	
3	0630462	8	Bolt	
4	0641414	8	Bolt 1/4 x 1-3/4	
5	0721005	4	Bolt #10 x 5/8	
6	0940103	1	Bumper Kit (Includes Corners and Enough Straight Material for One Platform)	
6	0940092	12	Bumper (Corner)	
6	0940094	AR	Bumper (12ft Length)	
7	1060341	23 ft/7m	Cable, Soft Touch - 16/2	
8	1060903	4	Wire Rope and Eyebolt Assembly	
9	1702938	1	Decal - Soft Touch Override	
10	3311401	8	Nut 1/4	
11	3311501	8	Nut 5/16	
12	3574091	2	Plate, Switch Strike	
13	4240099	7	Tie-Strap (Not Shown)	
14	4360057	2	Switch, Limit	
15	4360387	1	Switch, Push Button	
16	4420068	AR	Tape, Adhesive	
16	1001197017	AR	Tie-Strap	
17	4460049	2	Connector, Strain Relief	
18	4460234	7	Tie-Strap (Not Shown)	
19	4460425	1	Connector, Strain Relief	
20	4751400	8	Washer 1/4	
21	4751500	12	Washer 5/16	
22	4751800	8	Washer 1/2	
23	4846673	1	Rail, Soft Touch	
24	4933218	1	Soft Touch Wiring Diagram (Not Shown - Reference Only)	
25	2920028	1	Light, Indicator	
26	2920029	1	Bulb, Light	

FIGURE 5-46. SOFT TOUCH SYSTEM INSTALLATION - 8FT/2.44M FALL ARREST PLATFORM

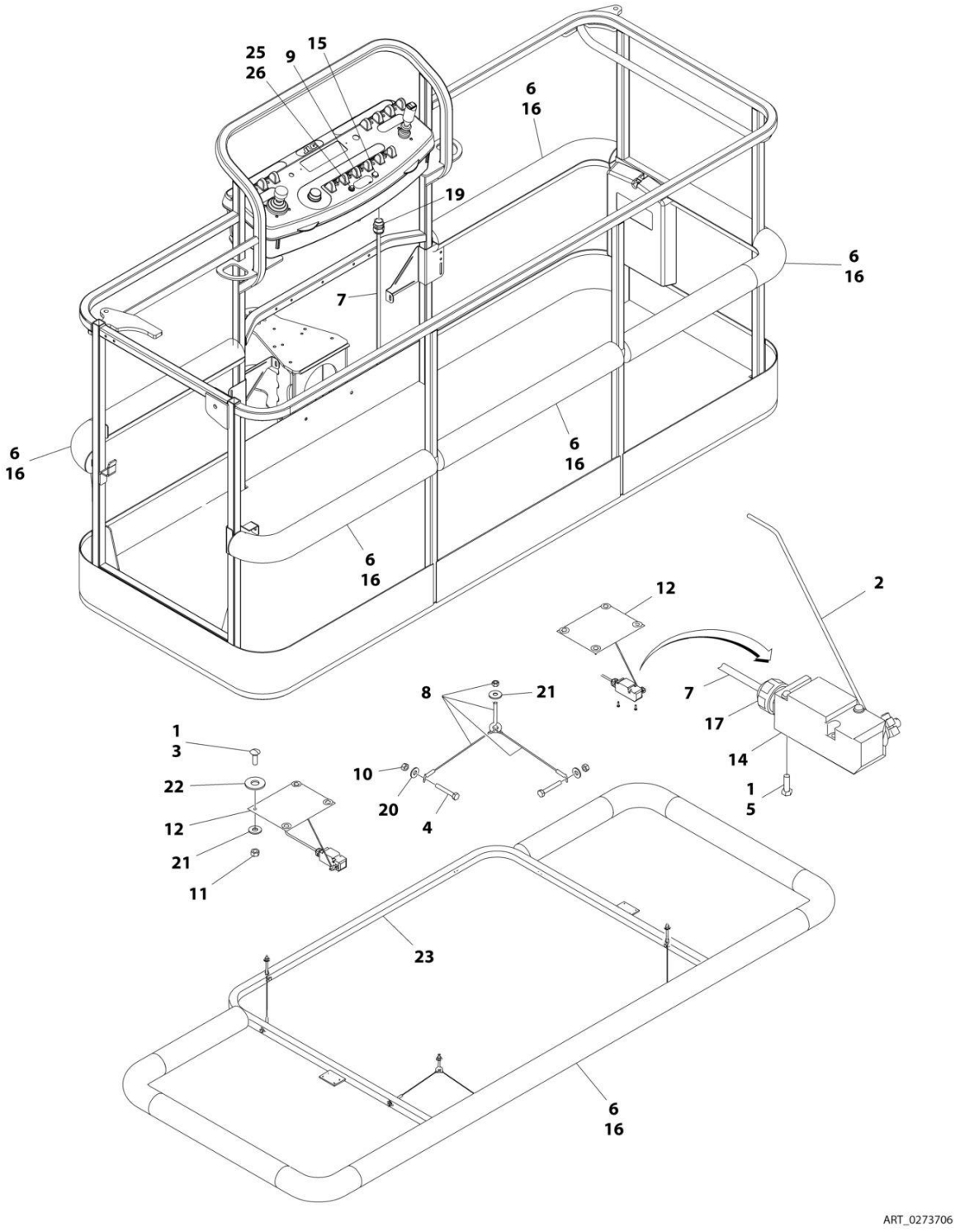

FIGURE 5-46. SOFT TOUCH SYSTEM INSTALLATION - 8FT/2.44M FALL ARREST PLATFORM

ITEM	PART NUMBER	QTY	DESCRIPTION	REV
	0273706	Ref	SOFT TOUCH INSTALLATION	D
1	0100011	AR	Compound, Locking	
2	0200048	2	Arm, Switch	
3	0630462	8	Bolt	
4	0641414	8	Bolt 1/4 x 1-3/4	
5	0721005	4	Bolt #10 x 5/8	
6	0940133	1	Bumper Kit (Includes Corners and Enough Straight Material for One Platform)	
6	0940092	8	Bumper (Corner)	
6	0940094	AR	Bumper (12ft Length)	
7	1060341	23 ft/7m	Cable, Soft Touch - 16/2	
8	1060903	4	Wire Rope and Eyebolt Assembly	
9	1702938	1	Decal - Soft Touch Override	
10	3311401	8	Nut 1/4	
11	3311501	8	Nut 5/16	
12	3574091	2	Plate, Switch Strike	
13	4240099	7	Tie-Strap (Not Shown)	
14	4360057	2	Switch, Limit	
15	4360387	1	Switch, Push Button	
16	4420068	AR	Tape, Adhesive	
16	1001197017	AR	Tie-Strap	
17	4460049	2	Connector, Strain Relief	
18	4460234	7	Tie-Strap (Not Shown)	
19	4460425	1	Connector, Strain Relief	
20	4751400	8	Washer 1/4	
21	4751500	12	Washer 5/16	
22	4751800	8	Washer 1/2	
23	4846673	1	Rail, Soft Touch	
25	2920028	1	Light, Indicator	
26	2920029	1	Bulb, Light	

FIGURE 5-47. FALL ARREST INSTALLATION (BOLT-ON) 30IN X 4FT (76CM X 1.22M) PLATFORM

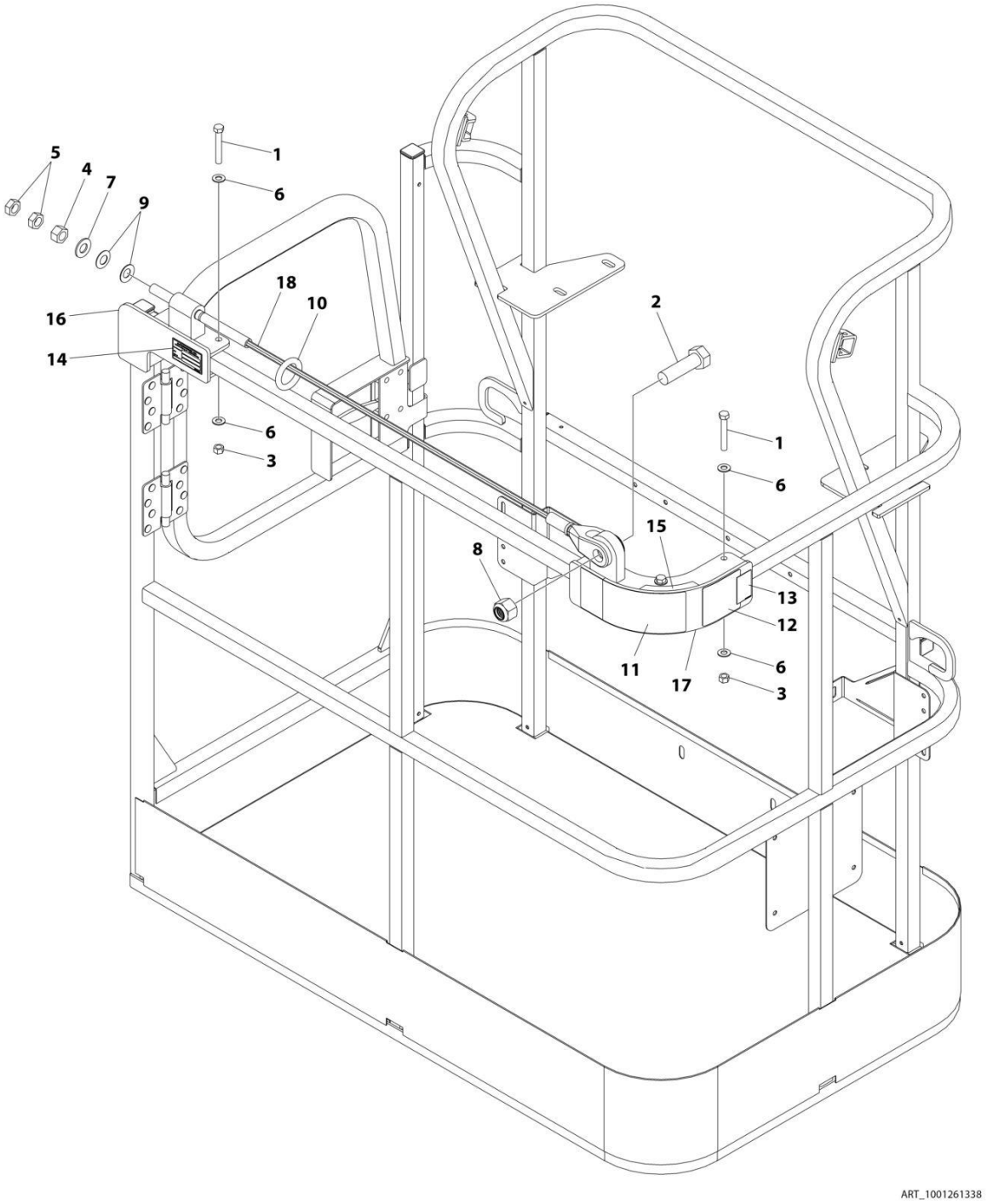

FIGURE 5-47. FALL ARREST INSTALLATION (BOLT-ON) 30IN X 4FT (76CM X 1.22M) PLATFORM

ITEM	PART NUMBER	QTY	DESCRIPTION	REV
	1001261338	Ref	FALL ARREST INSTALLATION	A
1	0681620	6	Bolt 3/8 x 2-1/2	
2	0682424	1	Bolt 7/8 x 3	
3	3271605	6	Nut 3/8	
4	3272001	1	Nut 5/8	
5	3312002	2	Nut 5/8	
6	4711600	12	Washer 3/8	
7	4712000	1	Washer 5/8	
8	88521214	1	Nut 7/8	
9	1001236891	2	Washer	
10	1001236895	1	Ring	
11	1001238263	1	Decal - Warning Falling Hazard	
12	1001248140	1	Decal - Bolt Fall Arrest Re-Cert	
13	1001248141	1	Decal - Incription	
14	See Note	NSS	Nameplate - Manufacturers Serial Number (Note: Not Available for Purchase)	
15	1001252629	1	Decal - Weight	
16	1001257271	1	Bracket (RH)	
17	1001257274	1	Bracket (LH)	
18	1001261335	1	Rope	

FIGURE 5-48. FALL ARREST INSTALLATION (BOLT-ON) 36IN X 6FT (91.2CM X 1.82M) PLATFORM

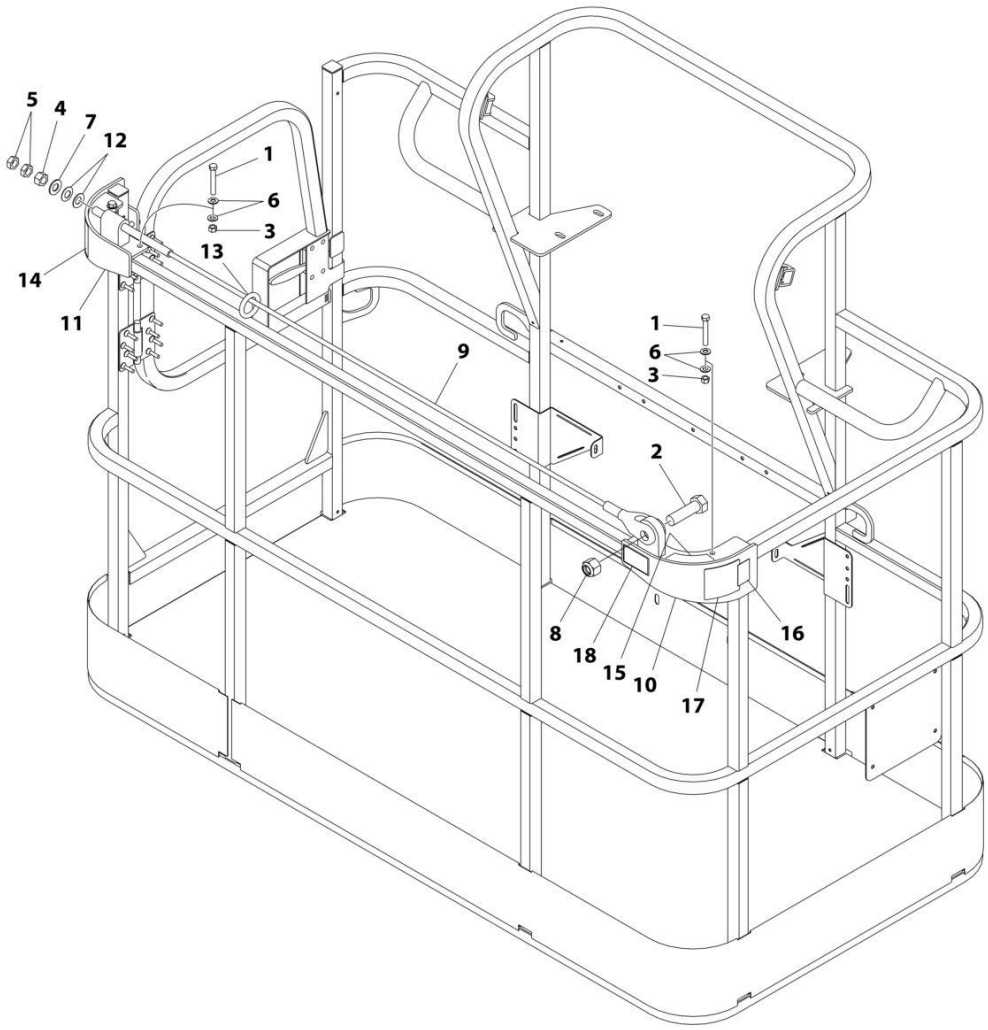

ART_1001236747

FIGURE 5-48. FALL ARREST INSTALLATION (BOLT-ON) 36IN X 6FT (91.2CM X 1.82M) PLATFORM

ITEM	PART NUMBER	QTY	DESCRIPTION	REV
	1001236747	Ref	FALL ARREST INSTALLATION (BOLT - ON) 6FT/1.82M PLATFORM	C
1	0681620	6	Bolt 3/8 x 2-1/2	
2	0682424	1	Bolt 7/8 x 3	
3	3271605	6	Nut 3/8	
4	3272001	1	Nut 5/8	
5	3312002	2	Nut 5/8	
6	4711600	12	Washer 3/8	
7	4712000	1	Washer 5/8	
8	88521214	1	Nut 7/8	
9	1001231950	1	Rope	
10	1001232010	1	Bracket (RH)	
11	1001232011	1	Bracket (LH)	
12	1001236891	2	Washer	
13	1001236895	1	Ring	
14	1001238263	1	Decal - Warning Falling Hazard	
15	1001252629	1	Decal - Weight	
16	1001248140	1	Decal - Bolt Fall Arrest Re-Cert	
17	1001248141	1	Decal - Inscription	

FIGURE 5-49. FALL ARREST INSTALLATION (BOLT-ON) 30IN X 6FT (76CM X 1.83M) PLATFORM

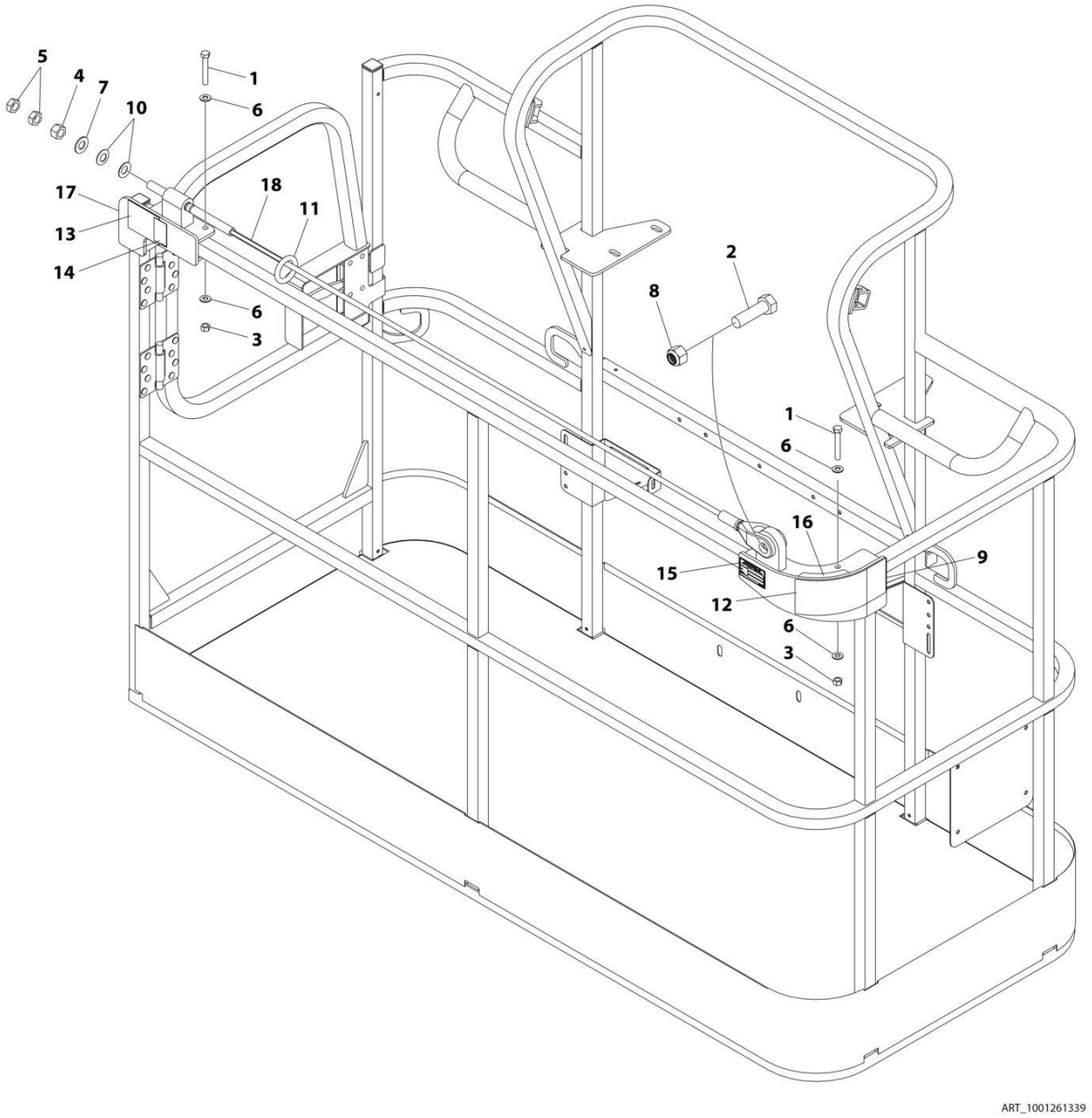

FIGURE 5-49. FALL ARREST INSTALLATION (BOLT-ON) 30IN X 6FT (76CM X 1.83M) PLATFORM

ITEM	PART NUMBER	QTY	DESCRIPTION	REV
	1001261339	Ref	FALL ARREST INSTALLATION (BOLT-ON) 30IN X 6FT (76CM X 1.83M) PLATFORM	A
1	0681620	6	Bolt 3/8 x 2-1/2	
2	0682424	1	Bolt 7/8 x 3	
3	3271605	6	Nut 3/8	
4	3272001	1	Nut 5/8	
5	3312002	2	Nut 5/8	
6	4711600	12	Washer 3/8	
7	4712000	1	Washer 5/8	
8	88521214	1	Nut 7/8	
9	1001232010	1	Bracket	
10	1001236891	2	Washer	
11	1001236895	1	Ring	
12	1001238263	1	Decal - Warning Falling Hazard	
13	1001248140	1	Decal - Bolt Fall Arrest Re-Cert	
14	1001248141	1	Decal - Incription	
15	See Note	NSS	Nameplate - Manufacturers Serial Number (Note: Not Available for Purchase)	
16	1001252629	1	Decal - Weight	
17	1001257271	1	Bracket	
18	1001261336	1	Rope	

FIGURE 5-50. FALL ARREST INSTALLATION (BOLT-ON) 36IN X 8FT (91.5CM X 2.4M) PLATFORM

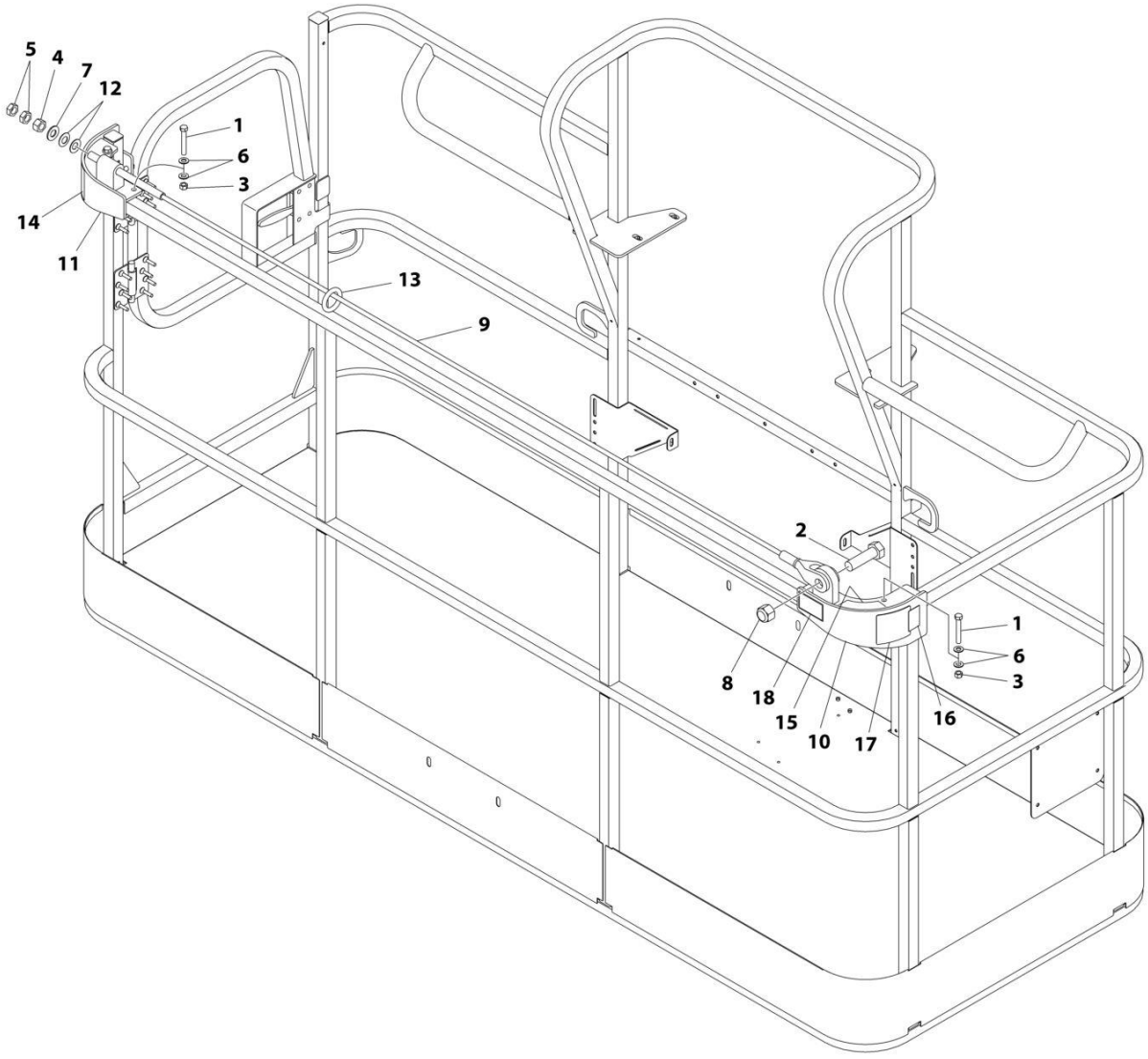

FIGURE 5-50. FALL ARREST INSTALLATION (BOLT-ON) 36IN X 8FT (91.5CM X 2.4M) PLATFORM

ITEM	PART NUMBER	QTY	DESCRIPTION	REV
	1001236746	Ref	FALL ARREST INSTALLATION (BOLT - ON) 8FT/2.4M PLATFORM	C
1	0681620	6	Bolt 3/8 x 2-1/2	
2	0682424	1	Bolt 7/8 x 3	
3	3271605	6	Nut 3/8	
4	3272001	1	Nut 5/8	
5	3312002	2	Nut 5/8	
6	4711600	12	Washer 3/8	
7	4712000	1	Washer 5/8	
8	88521214	1	Nut 7/8	
9	1001231949	1	Rope	
10	1001232010	1	Bracket (RH)	
11	1001232011	1	Bracket (LH)	
12	1001236891	2	Washer	
13	1001236895	1	Ring	
14	1001238263	1	Decal - Warning Falling Hazard	
15	1001252629	1	Decal - Weight 23LBS/10.4KG	
16	1001248140	1	Decal - Bolt Fall Arrest Re-Cert	
17	1001248141	1	Decal - Inscription	

FIGURE 5-51. FALL ARREST INSTALLATION (BOLT-ON) 36IN X 6FT (91.5CM X 1.82M) TRI-ENTRY PLATFORM)

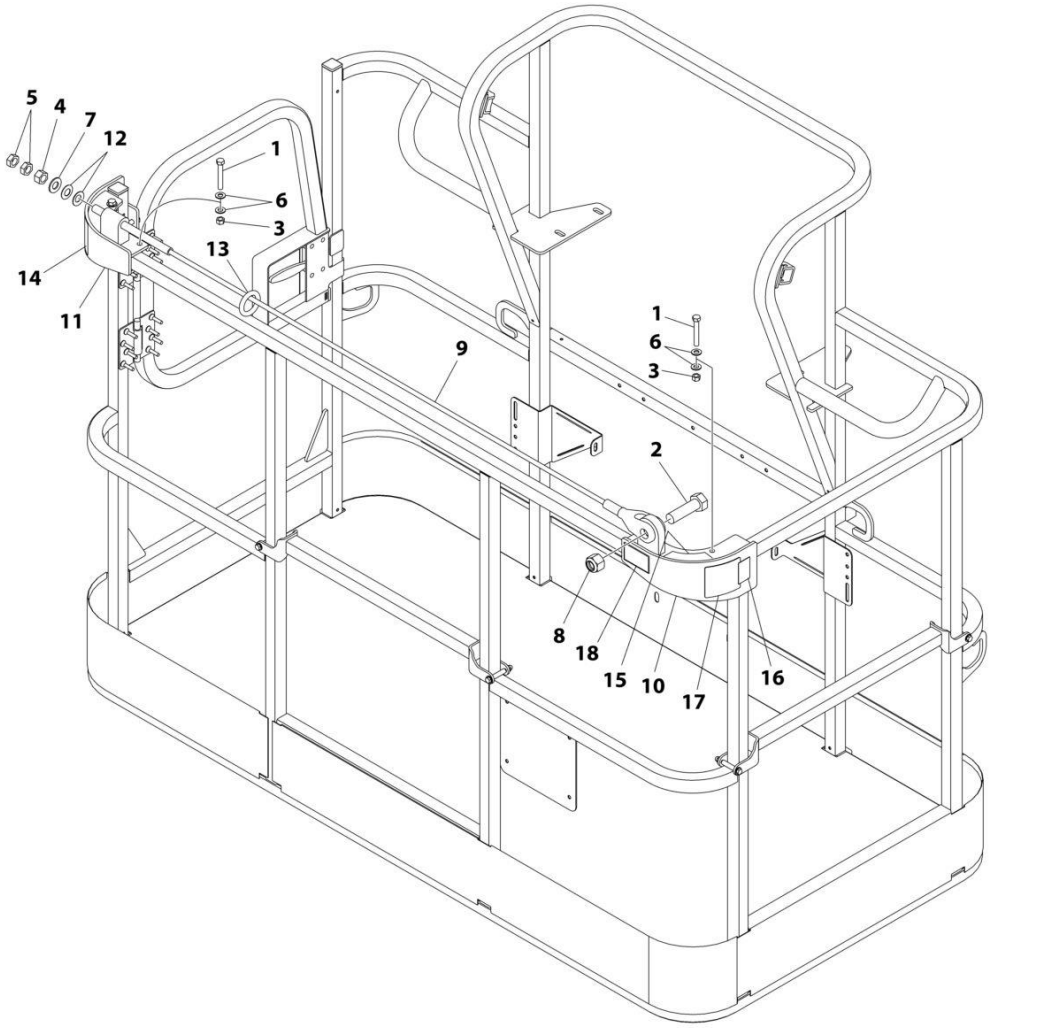

FIGURE 5-51. FALL ARREST INSTALLATION (BOLT-ON) 36IN X 6FT (91.5CM X 1.82M) TRI-ENTRY PLATFORM)

ITEM	PART NUMBER	QTY	DESCRIPTION	REV
	1001238463	Ref	FALL ARREST INSTALLATION (BOLT - ON) 6FT/1.82M PLATFORM	C
1	0681620	6	Bolt 3/8 x 2-1/2	
2	0682424	1	Bolt 7/8 x 3	
3	3271605	6	Nut 3/8	
4	3272001	1	Nut 5/8	
5	3312002	2	Nut 5/8	
6	4711600	12	Washer 3/8	
7	4712000	1	Washer 5/8	
8	88521214	1	Nut 7/8	
9	1001231950	1	Rope	
10	1001232010	1	Bracket (RH)	
11	1001232011	1	Bracket (LH)	
12	1001236891	2	Washer	
13	1001236895	1	Ring	
14	1001238263	1	Decal - Warning Falling Hazard	
15	1001252629	1	Decal - Weight	
16	1001248140	1	Decal - Bolt Fall Arrest Re-Cert	
17	1001248141	1	Decal - Inscription	

FIGURE 5-52. USB CHARGER INSTALLATION

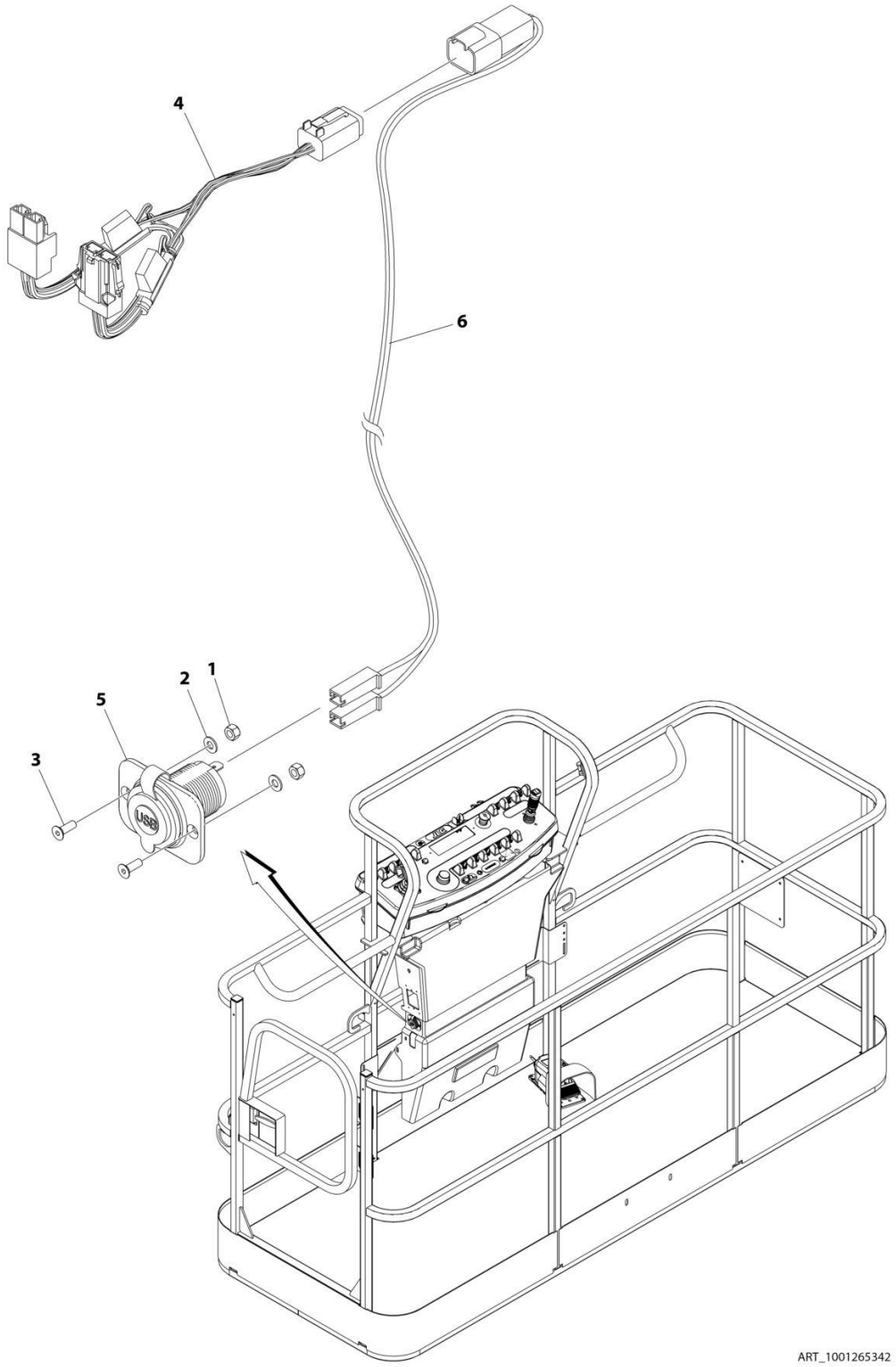

FIGURE 5-52. USB CHARGER INSTALLATION

ITEM	PART NUMBER	QTY	DESCRIPTION	REV
	1001265342	Ref	USB CHARGER INSTALLATION	A
1	3290405	2	Nut M4	
2	4811400	2	Washer M4	
3	1001097244	2	Screw M4 x 12	
4	1001120484	1	Harness, Work Lights	
4	4460879	1	Plug, Male - 2 Position	
4	4460887	2	Terminal	
4	2400060	2	Fuseholder Includes Cover	
4	8229249	2	Fuse, 3 Amp	
4	4460884	1	Connector - 4 Position	
4	4460465	4	Socket, Female	
4	1001120471	1	Connector - 2 Position	
4	1001120477	2	Terminal	
5	1001210636	1	Receptacle, USB	
6	1001265163	1	Harness, USB	A
6	4460260	2	Cover, Terminal	
6	4460259	2	Terminal	
6	4460932	1	Receptacle, Bussbar - 4 Position	
6	4460464	2	Pin, Male	
6	4460466	2	Plug, Terminal	

SECTION 6 - CYLINDER

FIGURE 6-1. AXLE LOCKOUT CYLINDER ASSEMBLY

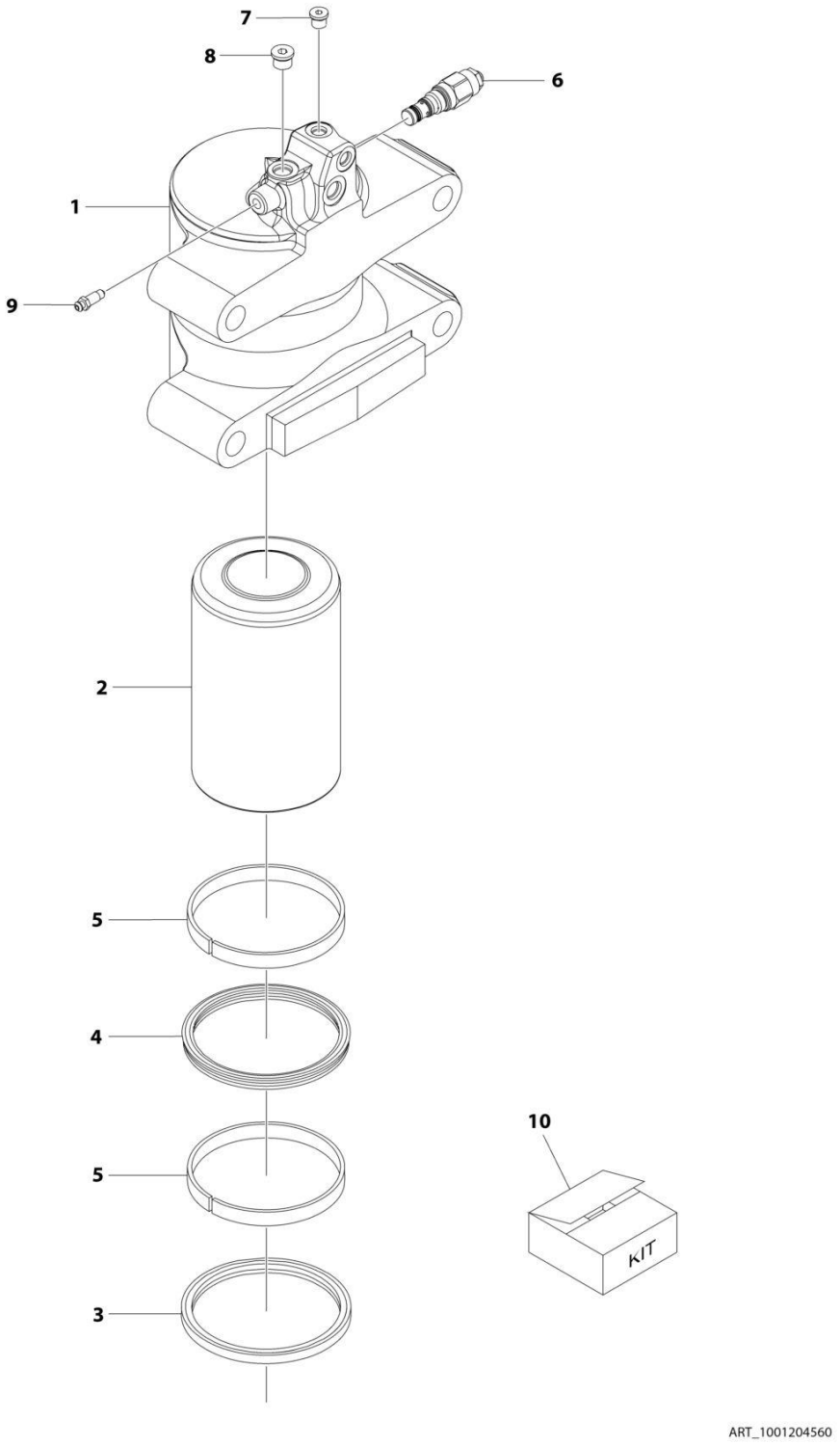

FIGURE 6-1. AXLE LOCKOUT CYLINDER ASSEMBLY

ITEM	PART NUMBER	QTY	DESCRIPTION	REV
	1001204560	Ref	AXLE LOCKOUT CYLINDER ASSEMBLY	D
1	1001154126	1	Barrel	
2	1001154687	1	Rod	
3	See Note	NSS	Wiper (Note: Use Item 10)	
4	See Note	NSS	Seal, Rod (Note: Use Item 10)	
5	See Note	NSS	Ring, Wear (Note: Use Item 10)	
6	1001117372	1	Cartridge, Valve (Counterbalance)	
6	70002842	1	Seal Kit - 1001117372 Valve (1 Per Assembly)	
7	2220883	1	Plug, O-Ring	
8	2220885	1	Plug, O-Ring	
9	4640858	1	Valve, Bleeder	
10	1001098167	1	Seal Kit (Includes Items 3-5)	

FIGURE 6-2. LEVEL CYLINDER ASSEMBLY - PLATFORM SLAVE

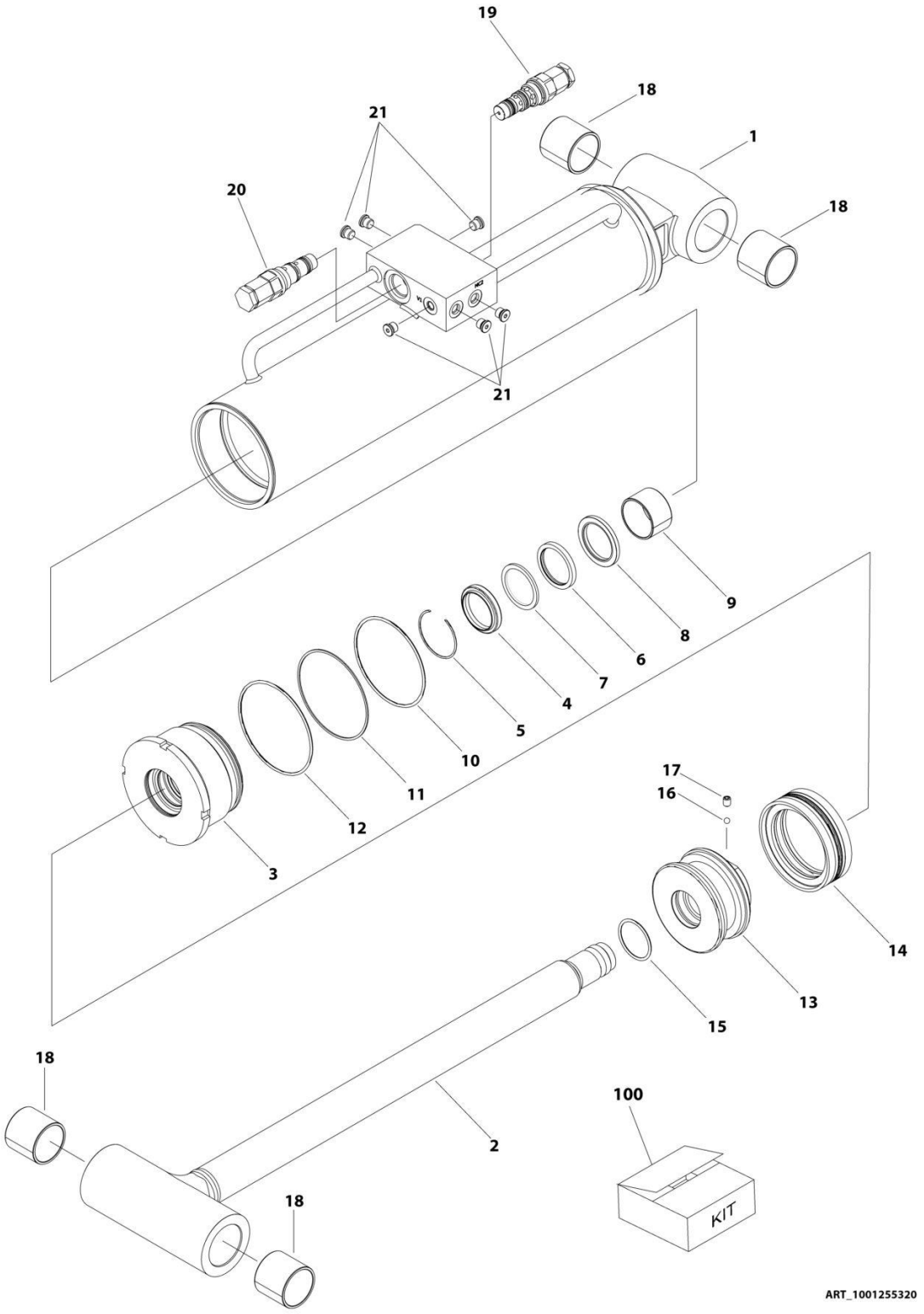

FIGURE 6-2. LEVEL CYLINDER ASSEMBLY - PLATFORM SLAVE

ITEM	PART NUMBER	QTY	DESCRIPTION	REV
	1001255320	Ref	LEVEL (SLAVE) CYLINDER ASSEMBLY	C
		Ref	Note: Original Cylinder may have been replaced with Service Replacement. Identify PN Stamped on Cylinder Before Ordering Parts.	
1	See Note	NSS	Barrel (Note: Not Available for Purchase)	
2	70007523	1	Rod	
3	70007157	1	Head	
4	See Note	NSS	Wiper (Note: Use Item 100)	
5	70002410	1	Ring, Retaining	
6	See Note	NSS	Seal (Note: Use Item 100)	
7	See Note	NSS	Ring, Back-up (Note: Use Item 100)	
8	See Note	NSS	Ring, Buffer (Note: Use Item 100)	
9	70004237	1	Ring, Wear	
10	See Note	NSS	O-Ring (Note: Use Item 100)	
11	See Note	NSS	Ring, Back-up (Note: Use Item 100)	
12	See Note	NSS	O-Ring (Note: Use Item 100)	
13	70007161	1	Piston	
14	See Note	NSS	Seal (Note: Use Item 100)	
15	See Note	NSS	O-Ring (Note: Use Item 100)	
16	70022564	1	Steel Ball	
17	70023369	1	Screw, Set	
18	70007159	4	Bushing	
19	4640605	1	Valve, Cartridge	
19	2900792	1	Seal Kit - 4640605 Valve	
20	4640932	1	Valve, Cartridge	
20	7011112	1	Seal Kit - 4640932 Valve	
21	2220883	6	Plug, O-Ring	
100	70007524	1	Seal Kit (Includes Items 4, 6-8, 10-12, 14 & 15)	

FIGURE 6-3. LEVEL CYLINDER ASSEMBLY - UPRIGHT

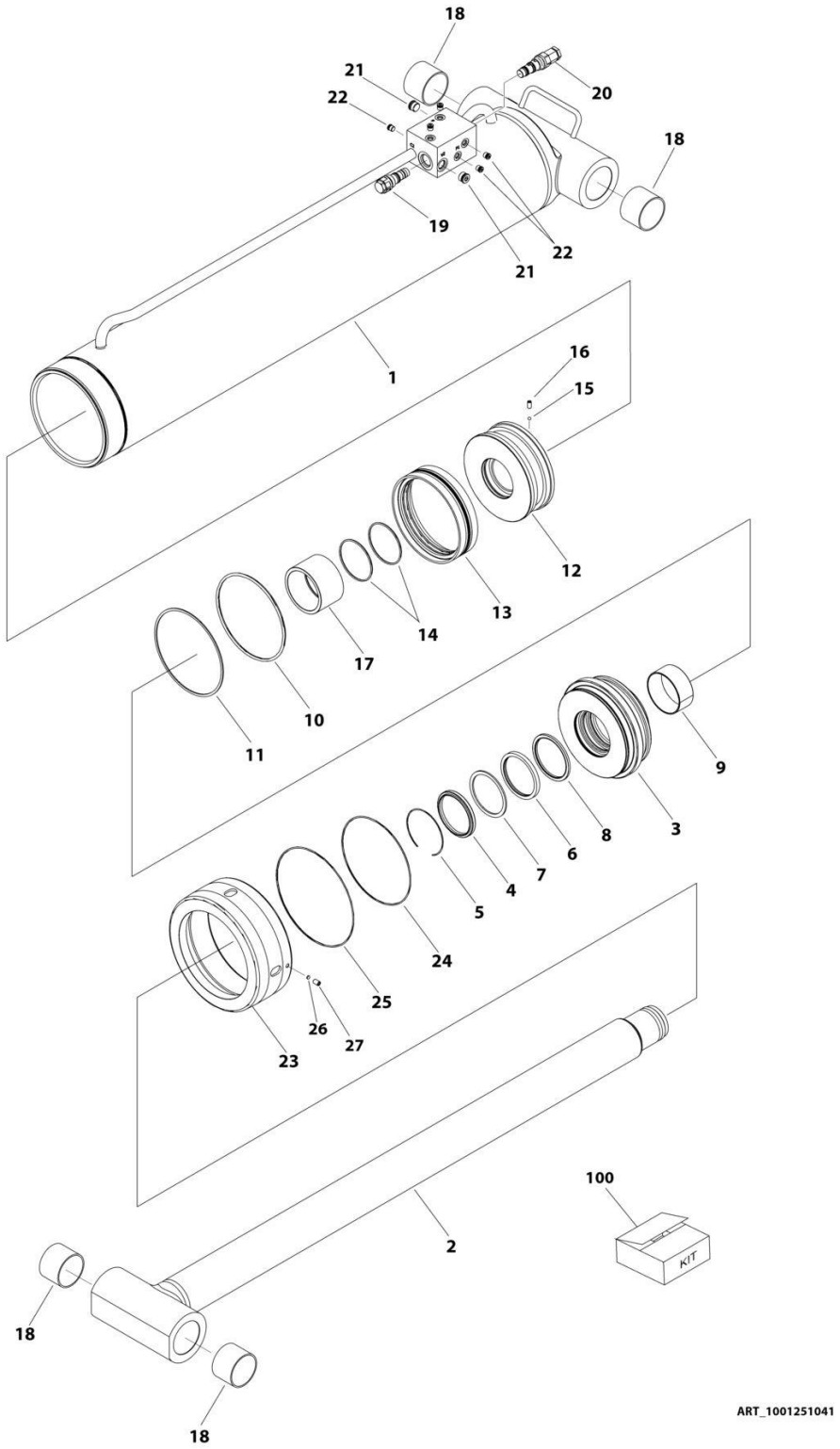

FIGURE 6-3. LEVEL CYLINDER ASSEMBLY - UPRIGHT

ITEM	PART NUMBER	QTY	DESCRIPTION	REV
	1001251041	Ref	LIFT CYLINDER ASSEMBLY	C
		Ref	Note: Original Cylinder may have been replaced with Service Replacement. Identify PN Stamped on Cylinder Before Ordering Parts.	
1	See Note	NSS	Barrel (Note: Not Available for Purchase)	
2	70007427	1	Rod	
3	70007422	1	Head	
4	See Note	NSS	Wiper (Note: Use Item 100)	
5	70023380	1	Ring, Retaining	
6	See Note	NSS	Seal (Note: Use Item 100)	
7	See Note	NSS	Ring, Back-up (Note: Use Item 100)	
8	See Note	NSS	Ring, Buffer (Note: Use Item 100)	
9	70007423	1	Ring, Wear	
10	See Note	NSS	O-Ring (Note: Use Item 100)	
11	See Note	NSS	Ring, Back-up (Note: Use Item 100)	
12	70007428	1	Piston	
13	See Note	NSS	Seal (Note: Use Item 100)	
14	See Note	NSS	O-Ring (Note: Use Item 100)	
15	70022564	1	Steel Ball	
16	70007246	1	Screw, Set	
17	70007429	1	Spacer	
18	0962102	4	Bushing	
19	4640509	1	Cartridge, Valve	
19	2900792	1	Seal Kit - 4640509 Valve	
20	4640605	1	Cartridge, Valve	
20	2900792	1	Seal Kit - 4640605 Valve	
21	2220886	2	Plug, O-Ring	
22	2220883	5	Plug, O-Ring	
23	70007278	1	Cap	
24	See Note	1	O-Ring (Note: Use Item 100)	
25	See Note	NSS	O-Ring (Note: Use Item 100)	
26	70007282	1	Insert, Locking	
27	70026287	1	Screw, Set	
100	70007430	1	Seal Kit (Includes Items 4, 6-8, 10, 11, 13, 14, 24 & 25)	

FIGURE 6-4. LIFT CYLINDER ASSEMBLY - JIB

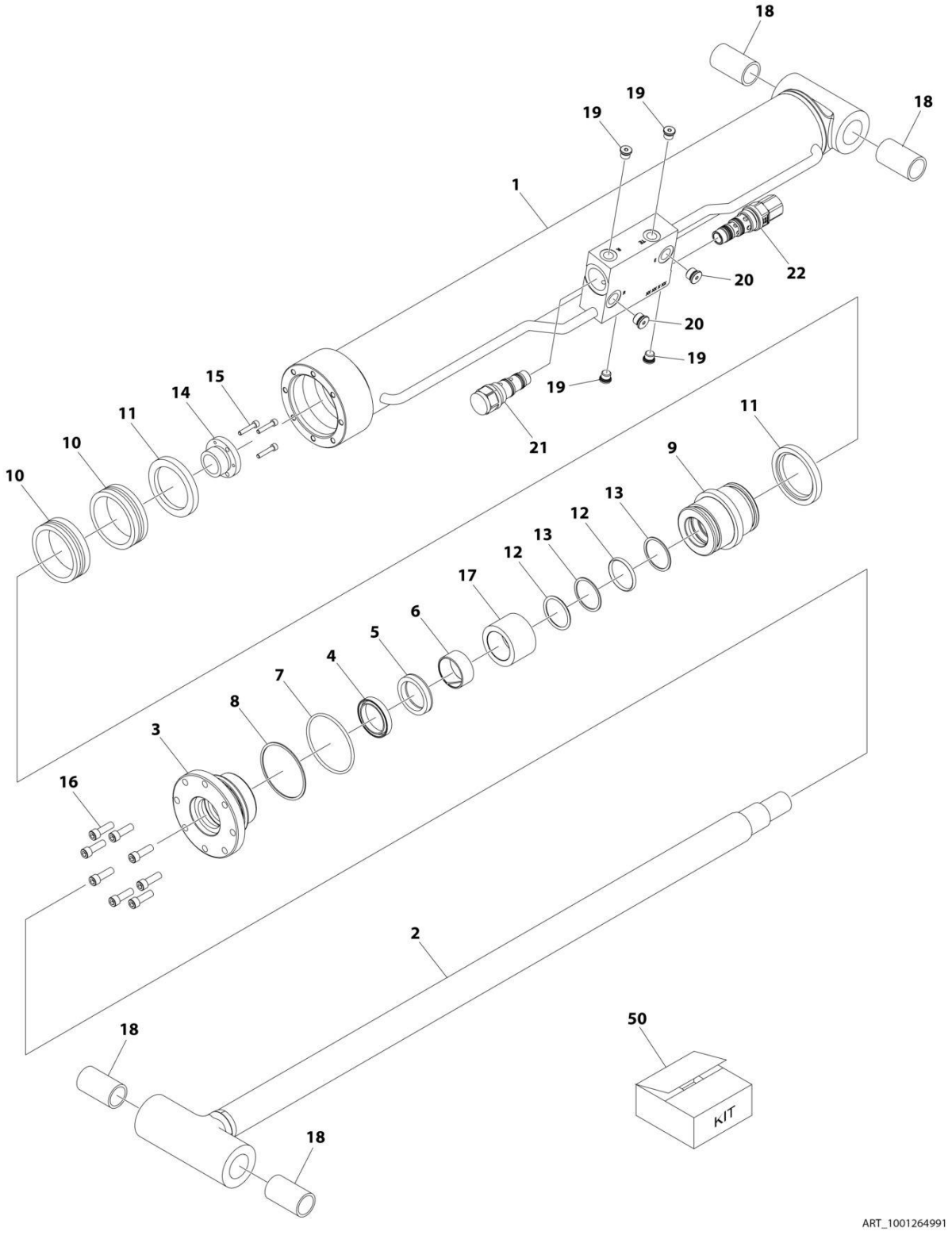

FIGURE 6-4. LIFT CYLINDER ASSEMBLY - JIB

ITEM	PART NUMBER	QTY	DESCRIPTION	REV
	1001264991	Ref	LIFT CYLINDER ASSEMBLY - JIB	B
		Ref	Note: Original Cylinder May Have Been Replaced with Service Replacement. Identify PN Stamped on Cylinder Before Ordering Parts.	
1	See Note	NSS	Barrel (Note: Use PN 1001264991)	
2	70006734	1	Rod	
3	70006649	1	Head	
4	See Note	NSS	Wiper (Note: Use Item 50)	
5	See Note	NSS	Seal, Rod (Note: Use Item 50)	
6	See Note	NSS	Ring, Wear (Note: Use Item 50)	
7	See Note	NSS	O-Ring (Note: Use Item 50)	
8	See Note	NSS	Ring, Back-up (Note: Use Item 50)	
9	70006650	1	Piston	
10	See Note	NSS	Ring, Hydro Lock (Note: Use Item 50)	
11	See Note	NSS	Ring, Guide Lock (Note: Use Item 50)	
12	See Note	NSS	O-Ring (Note: Use Item 50)	
13	See Note	NSS	Ring, Back-up (Note: Use Item 50)	
14	0961893	1	Bushing, Tapered	
15	0630534	3	Capscrew	
16	70006735	8	Capscrew	
17	70006736	1	Spacer	
18	0962336	4	Bearing	
19	70023370	4	Plug	
20	70023371	2	Plug	
21	4640509	1	Cartridge, Counterbalance Valve	
21	2900792	1	Seal Kit - 4640509 Valve	
22	1001263800	1	Cartridge, Counterbalance Valve	
22	70004186	1	Seal Kit - 1001263800 Valve	
50	1001138795	1	Seal Kit - 1001264991 Cylinder (Includes Items 4-8 & 10-13)	

FIGURE 6-5. LIFT CYLINDER ASSEMBLY - MAIN BOOM

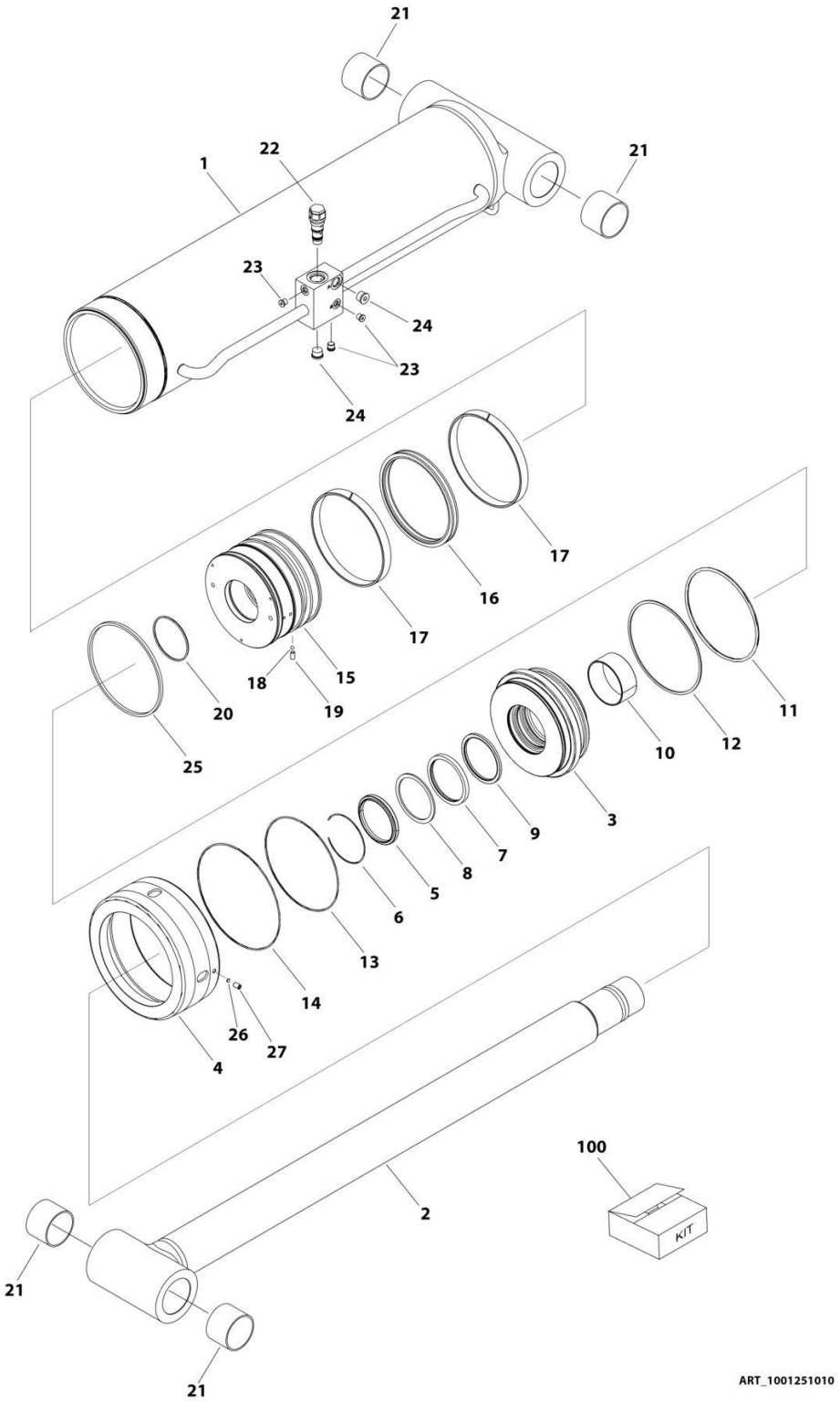

FIGURE 6-5. LIFT CYLINDER ASSEMBLY - MAIN BOOM

ITEM	PART NUMBER	QTY	DESCRIPTION	REV
	1001251010	Ref	LIFT CYLINDER ASSEMBLY	C
		Ref	Note: Original Cylinder may have been replaced with Service Replacement. Identify PN Stamped on Cylinder Before Ordering Parts.	
1	See Note	NSS	Barrel (Note: Not Available for Purchase)	
2	70007421	1	Rod	
3	70007422	1	Head	
4	70007278	1	Cap	
5	See Note	NSS	Wiper (Note: Use Item 100)	
6	70023380	1	Ring, Retaining	
7	See Note	NSS	Seal (Note: Use Item 100)	
8	See Note	NSS	Ring, Back-up (Note: Use Item 100)	
9	See Note	NSS	Ring, Buffer (Note: Use Item 100)	
10	70007423	1	Ring, Wear	
11	See Note	NSS	O-Ring (Note: Use Item 100)	
12	See Note	NSS	Ring, Back-up (Note: Use Item 100)	
13	See Note	NSS	O-Ring (Note: Use Item 100)	
14	See Note	NSS	O-Ring (Note: Use Item 100)	
15	70007424	1	Piston	
16	See Note	NSS	Seal (Note: Use Item 100)	
17	See Note	NSS	Ring, Wear (Note: Use Item 100)	
18	70022564	1	Steel Ball	
19	70007246	1	Screw, Set	
20	See Note	1	O-Ring (Note: Use Item 100)	
21	0962102	4	Bushing	
22	4640509	1	Cartridge, Valve	
22	2900792	1	Seal Kit - 4640509 Valve	
23	2220883	3	Plug, O-Ring	
24	2220886	2	Plug, O-Ring	
25	70007425	1	Ring, Piston	
26	70007282	1	Insert, Locking	
27	70026287	1	Screw, Set	
100	70007426	1	Seal Kit (Includes Items 5, 7-9, 11-14, 16, 17 & 20)	

FIGURE 6-6. LIFT CYLINDER ASSEMBLY - TOWER BOOM

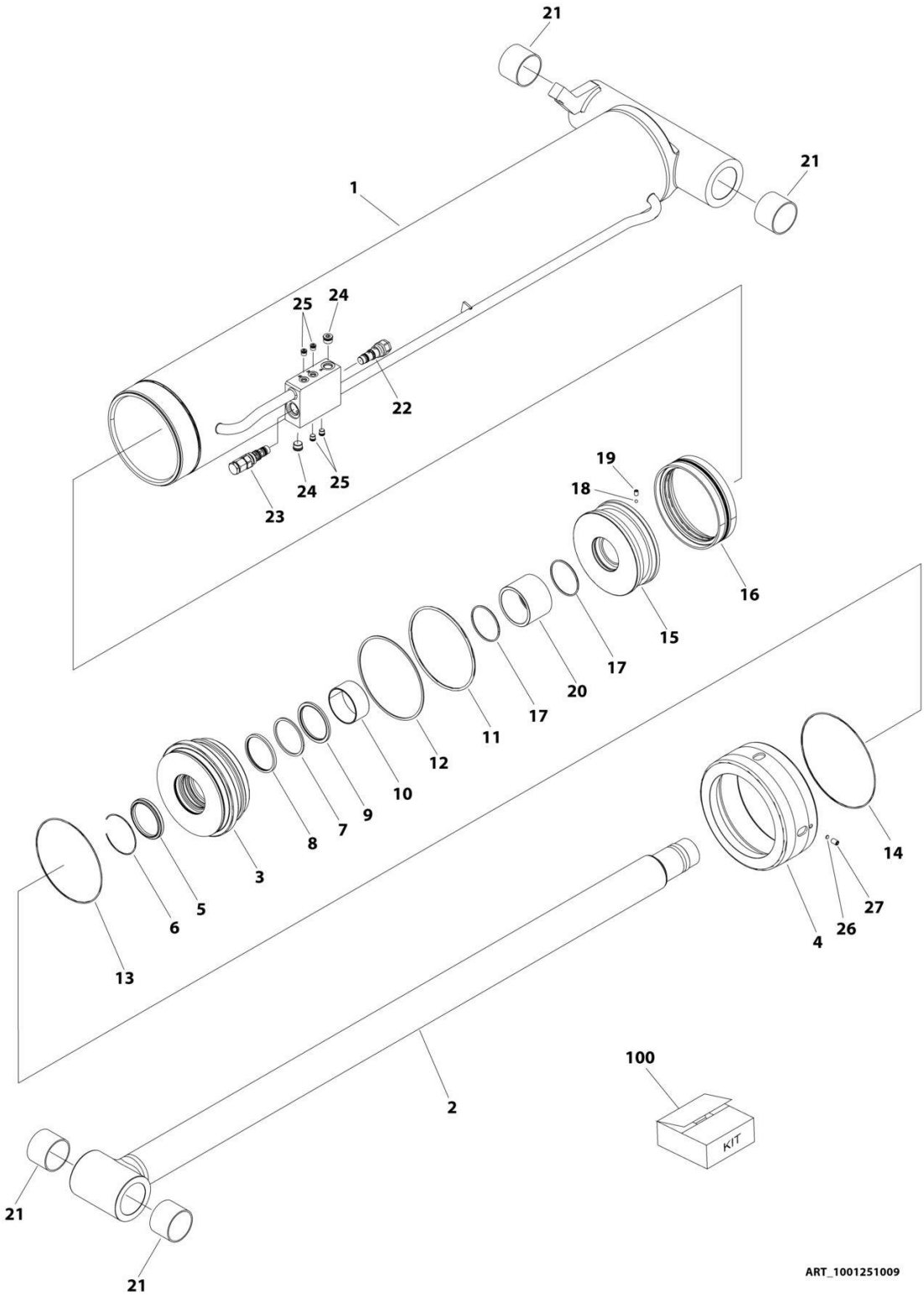

FIGURE 6-6. LIFT CYLINDER ASSEMBLY - TOWER BOOM

ITEM	PART NUMBER	QTY	DESCRIPTION	REV
	1001251009	Ref	LIFT CYLINDER ASSEMBLY	C
		Ref	Note: Original Cylinder may have been replaced with Service Replacement. Identify PN Stamped on Cylinder Before Ordering Parts.	
1	See Note	NSS	Barrel (Note: Not Available for Purchase)	
2	70007419	1	Rod	
3	70007277	1	Head	
4	70007278	1	Cap	
5	See Note	NSS	Wiper (Note: Use Item 100)	
6	70027750	1	Ring, Retaining	
7	See Note	NSS	Seal (Note: Use Item 100)	
8	See Note	NSS	Ring, Back-up (Note: Use Item 100)	
9	See Note	NSS	Ring, Buffer (Note: Use Item 100)	
10	70007279	1	Ring, Wear	
11	See Note	NSS	O-Ring (Note: Use Item 100)	
12	See Note	NSS	Ring, Back-up (Note: Use Item 100)	
13	See Note	NSS	O-Ring (Note: Use Item 100)	
14	See Note	NSS	O-Ring (Note: Use Item 100)	
15	70007280	1	Piston	
16	See Note	NSS	Seal (Note: Use Item 100)	
17	See Note	NSS	O-Ring (Note: Use Item 100)	
18	70022564	1	Steel Ball	
19	70029468	1	Screw, Set	
20	70007420	1	Spacer	
21	0962102	4	Bushing	
22	4640509	1	Cartridge, Valve	
22	2900792	1	Seal Kit - 4640509 Valve	
23	4640605	1	Cartridge, Valve	
23	2900792	1	Seal Kit - 4640605 Valve	
24	2220886	1	Plug, O-Ring	
25	2220883	4	Plug, O-Ring	
26	70007282	1	Insert, Locking	
27	70026287	1	Screw, Set	
100	70007283	1	Seal Kit (Includes Items 5, 7-9, 11-14, 16 & 17)	

FIGURE 6-7. MASTER CYLINDER ASSEMBLY

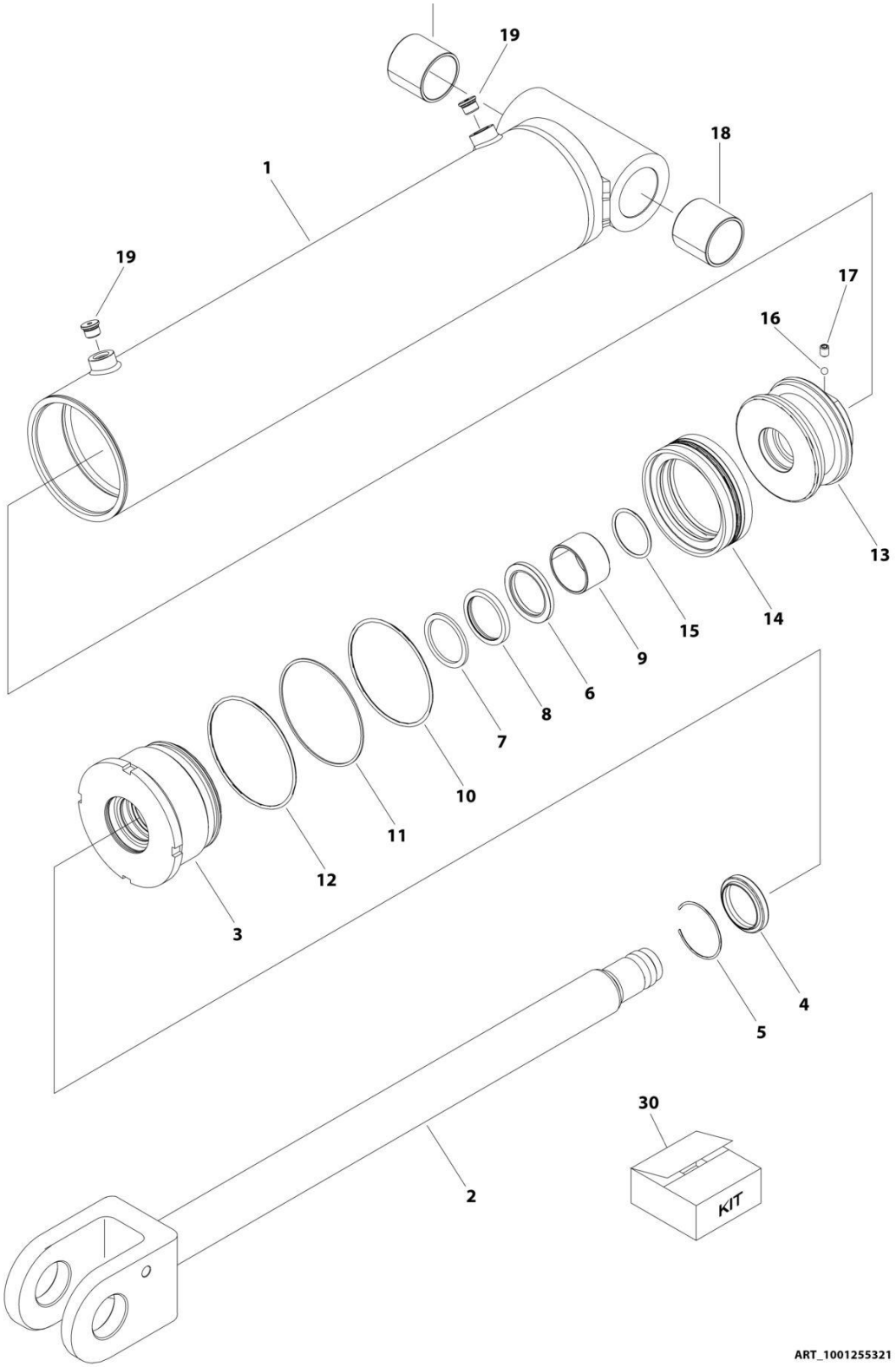

FIGURE 6-7. MASTER CYLINDER ASSEMBLY

ITEM	PART NUMBER	QTY	DESCRIPTION	REV
	1001255321	Ref	MASTER CYLINDER ASSEMBLY	E
		Ref	Note: Original Cylinder may have been replaced with Service Replacement. Identify PN Stamped on Cylinder Before Ordering Parts.	
1	See Note	NSS	Barrel (Note: Not Available for Purchase)	
2	70007525	1	Rod	
3	70007157	1	Head	
4	See Note	NSS	Wiper (Note: Use Item 30)	
5	70002410	1	Ring, Retaining	
6	See Note	NSS	Seal, Rod (Note: Use Item 30)	
7	See Note	NSS	Ring, Back-up (Note: Use Item 30)	
8	See Note	NSS	Ring, Buffer (Note: Use Item 30)	
9	70004237	1	Ring, Wear	
10	See Note	NSS	O-Ring (Note: Use Item 30)	
11	See Note	NSS	Ring, Back-up (Note: Use Item 30)	
12	See Note	NSS	O-Ring (Note: Use Item 30)	
13	70007161	1	Piston	
14	See Note	NSS	Ring, Lock (Note: Use Item 30)	
15	See Note	NSS	O-Ring (Note: Use Item 30)	
16	70022564	1	Steel Ball	
17	70023369	1	Screw, Set	
18	70007159	1	Bushing	
19	2220885	2	Plug, O-Ring	
30	70007524	1	Seal Kit (Includes Items 4, 6-8, 10-12, 14 & 15)	

FIGURE 6-8. STEER CYLINDER ASSEMBLY

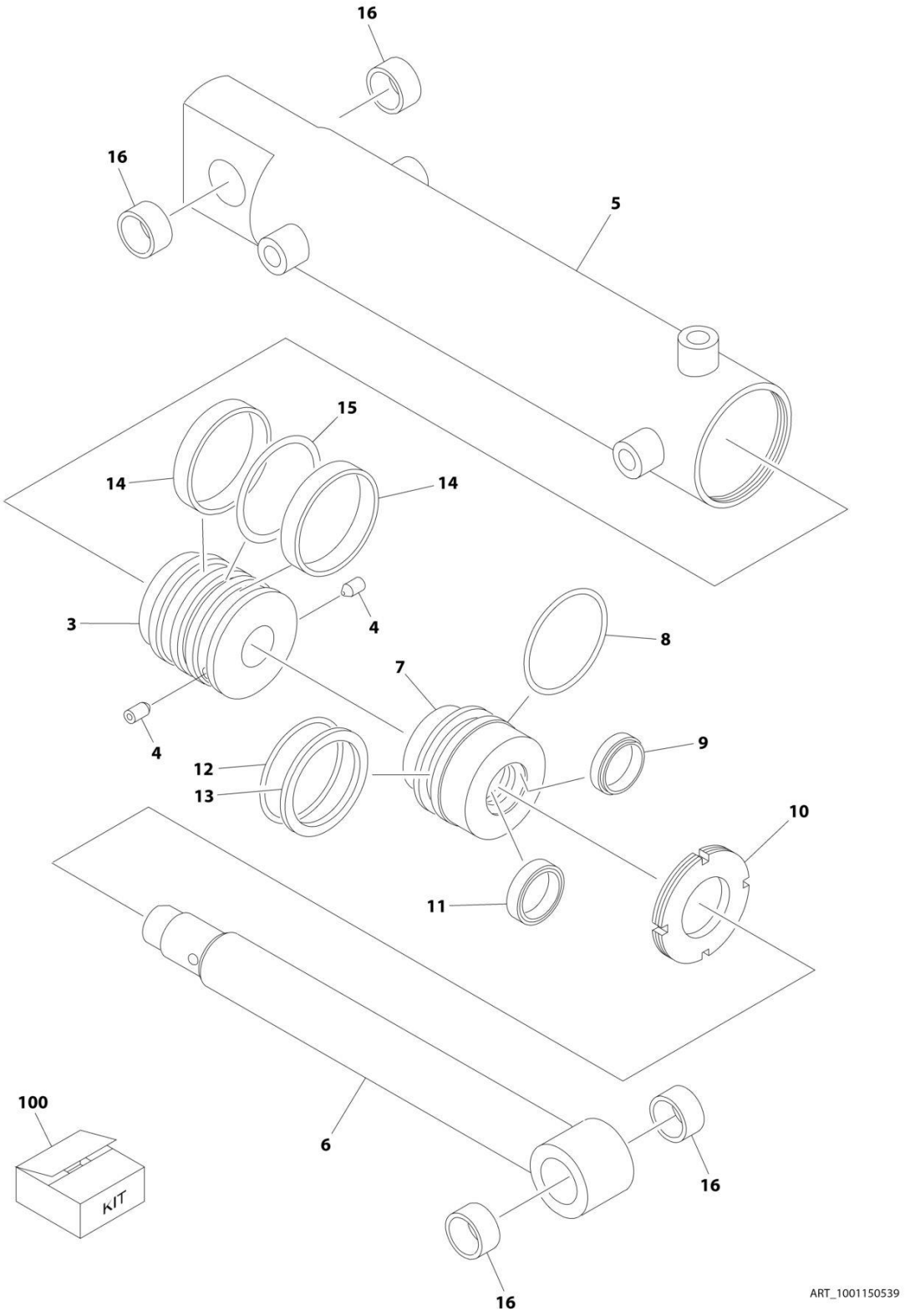

FIGURE 6-8. STEER CYLINDER ASSEMBLY

ITEM	PART NUMBER	QTY	DESCRIPTION	REV
	1001150539	Ref	STEER CYLINDER ASSEMBLY	F
		Ref	Note: Original Cylinder may have been replaced with Service Replacement. Identify PN Stamped on Cylinder Before Ordering Parts.	
3	70002744	1	Piston	
4	70002745	2	Setscrew M6 x 10	
5	70004381	1	Barrel	
6	70004382	1	Rod	
7	70002748	1	Head	
8	See Note	NSS	Ring (Note: Use Item 100)	
9	See Note	NSS	Wiper (Note: Use Item 100)	
10	70002749	1	Nut, Spanner	
11	See Note	NSS	Seal (Note: Use Item 100)	
12	See Note	NSS	O-Ring (Note: Use Item 100)	
13	See Note	NSS	Ring, Back-up (Note: Use Item 100)	
14	See Note	NSS	Ring, Wear (Note: Use Item 100)	
15	See Note	NSS	Seal (Note: Use Item 100)	
16	0962152	4	Bushings	
100	70002751	1	Seal Kit (Includes Items 8, 9 & 11-15)	

FIGURE 6-9. TELESCOPE CYLINDER ASSEMBLY - MAIN BOOM

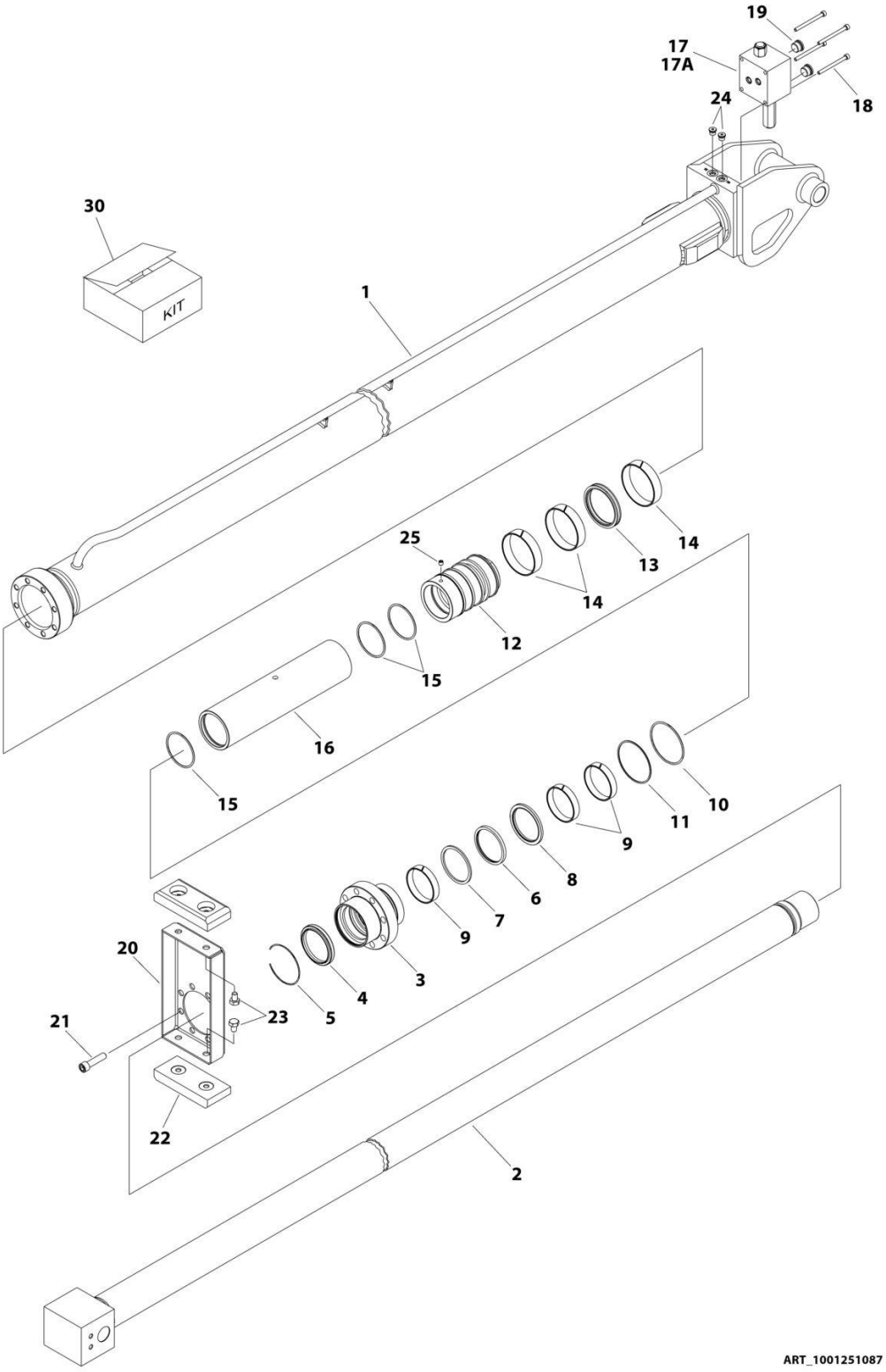

FIGURE 6-9. TELESCOPE CYLINDER ASSEMBLY - MAIN BOOM

ITEM	PART NUMBER	QTY	DESCRIPTION	REV
	1001251087	Ref	TELESCOPE CYLINDER ASSEMBLY	A
		Ref	Note: Original Cylinder may have been replaced with Service Replacement. Identify PN Stamped on Cylinder Before Ordering Parts.	
1	See Note	NSS	Barrel (Note: Not Available for Purchase)	
2	70007514	1	Rod	
3	70007515	1	Head	
4	See Note	NSS	Wiper (Note: Use Item 30)	
5	70027259	1	Ring, Retaining	
6	See Note	NSS	Seal, Rod (Note: Use Item 30)	
7	See Note	NSS	Ring, Back-up (Note: Use Item 30)	
8	See Note	NSS	Ring, Buffer (Note: Use Item 30)	
9	See Note	NSS	Ring, Wear (Note: Use Item 30)	
10	See Note	NSS	O-Ring (Note: Use Item 30)	
11	See Note	NSS	Ring, Back-up (Note: Use Item 30)	
12	70007516	1	Piston	
13	See Note	NSS	Seal, Piston (Note: Use Item 30)	
14	See Note	NSS	Ring, Wear (Note: Use Item 30)	
15	See Note	NSS	O-Ring (Note: Use Item 30)	
16	70007517	1	Spacer	
17	4641033	1	Valve Assembly (No serviceable parts - sold as assembly only)	
17A	7024508	2	O-Ring (Between Valve and Cylinder Barrel)	
18	70006802	4	Capscrew M6	
19	2220886	2	Plug, O-Ring	
20	70007518	1	Plate	
21	70007519	8	Capscrew M12	
22	70007520	2	Pad, Wear	
23	70007521	4	Bolt M10	
24	2220883	2	Plug, O-Ring	
25	70006799	1	Screw, Set	
30	70007522	1	Seal Kit (Includes Items 4, 6, 7, 9-11 & 13-15)	

FIGURE 6-10. TELESCOPE CYLINDER ASSEMBLY - TOWER BOOM

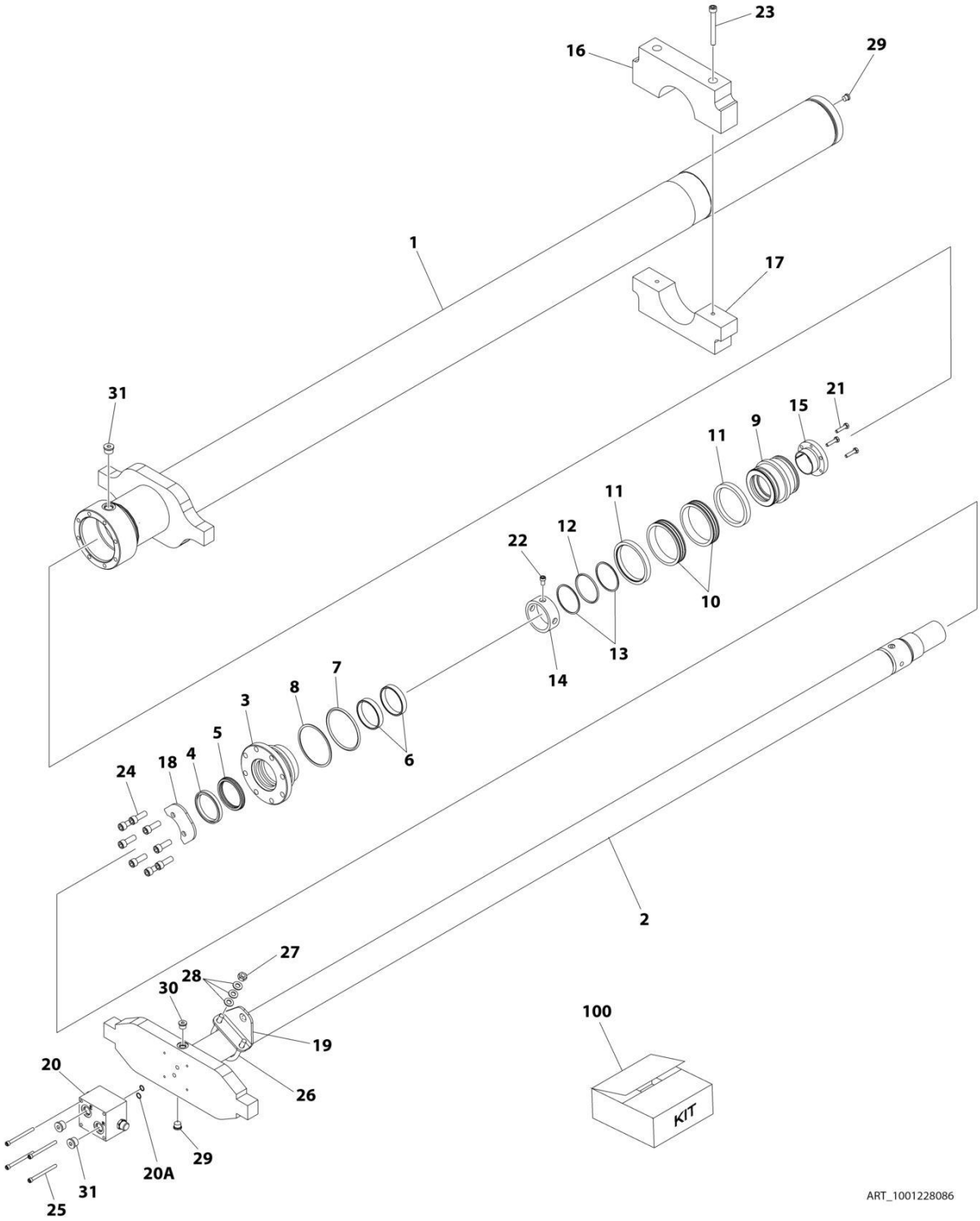

FIGURE 6-10. TELESCOPE CYLINDER ASSEMBLY - TOWER BOOM

ITEM	PART NUMBER	QTY	DESCRIPTION	REV
	1001228086	Ref	TELESCOPE CYLINDER ASSEMBLY	C
		Ref	Note: Original Cylinder may have been replaced with Service Replacement. Identify PN Stamped on Cylinder Before Ordering Parts.	
1	See Note	NSS	Barrel (Note: Not Available for Purchase)	
2	70006921	1	Rod	
3	70006480	1	Head	
4	See Note	NSS	Wiper (Note: Use Item 100)	
5	See Note	NSS	Seal, Rod (Note: Use Item 100)	
6	See Note	NSS	Ring, Wear (Note: Use Item 100)	
7	See Note	NSS	O-Ring (Note: Use Item 100)	
8	See Note	NSS	Ring, Back-up (Note: Use Item 100)	
9	70006479	1	Piston	
10	See Note	NSS	Seal, Piston (Note: Use Item 100)	
11	See Note	NSS	Ring, Lock (Note: use Item 100)	
12	See Note	NSS	O-Ring (Note: Use Item 100)	
13	See Note	NSS	Ring, Back-up (Note: Use Item 100)	
14	70006922	1	Spacer	
15	0961897	1	Bushing, Tapered	
16	70006923	1	Pad, Wear	
17	70006924	1	Pad, Wear	
18	70006925	1	Plate	
19	70006926	1	Plate	
20	4641032	1	Valve Assembly (No serviceable parts - sold as assembly only)	
20A	7024397	2	O-Ring (Between Valve and Cylinder Barrel)	
21	0630535	3	Bolt 1/4 x 1-1/8	
22	70006731	1	Bolt	
23	70006927	2	Bolt M10	
24	70006728	8	Bolt 7/16	
25	70006733	4	Bolt M8	
26	70006928	1	U-Bolt M10	
27	70005594	2	Nut M10	
28	70006344	6	Washer M10	
29	2220883	2	Plug, O-Ring	
30	2220885	1	Plug, O-Ring	
31	2220886	3	Plug, O-Ring	
100	1001188842	1	Seal Kit - 1001228086 Cylinder (Includes Items 4-8 & 10-13)	

SECTION 7 - HYDRAULIC

FIGURE 7-1. HYDRAULIC DIAGRAM - AXLE (OSCILLATING)

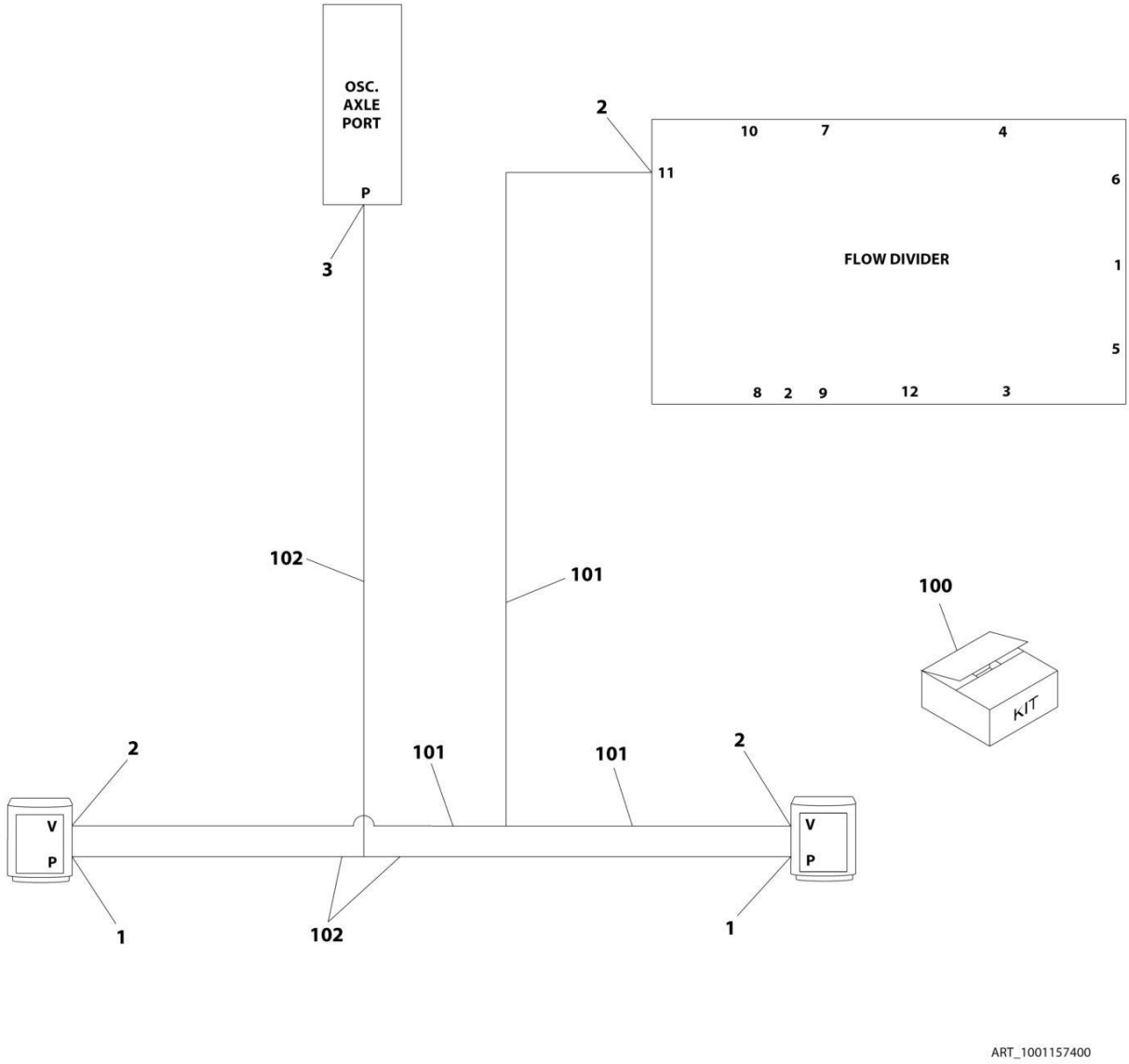

FIGURE 7-1. HYDRAULIC DIAGRAM - AXLE (OSCILLATING)

ITEM	PART NUMBER	QTY	DESCRIPTION	REV
	1001157400	Ref	AXLE LOCKOUT HYDRAULIC DIAGRAM	G
1	2110404	2	Fitting, Straight ORFS/ORB	
2	2110606	3	Fitting, Straight ORFS/ORB	
3	2110408	1	Fitting, Straight ORFS/ORB	
100	1001270068	1	Hose Lockout Kit	
101	1001198336	1	Hose with Crimped Tee	
102	1001198339	1	Hose with Crimped Tee	

FIGURE 7-2. HYDRAULIC DIAGRAM - DRIVE (4WD/2WS WITHOUT TOW PACKAGE/WITHOUT ARCTIC PACKAGE)

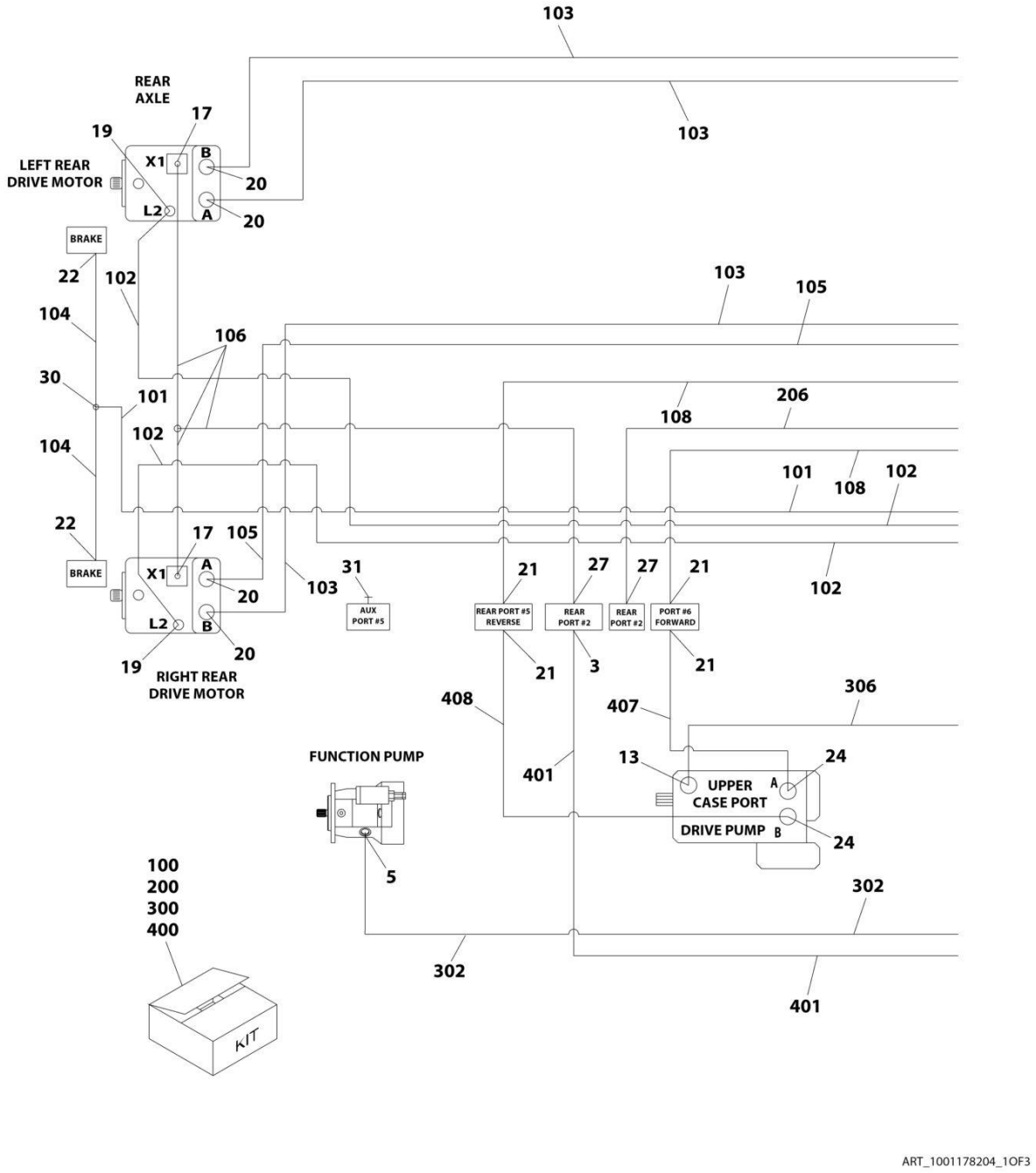

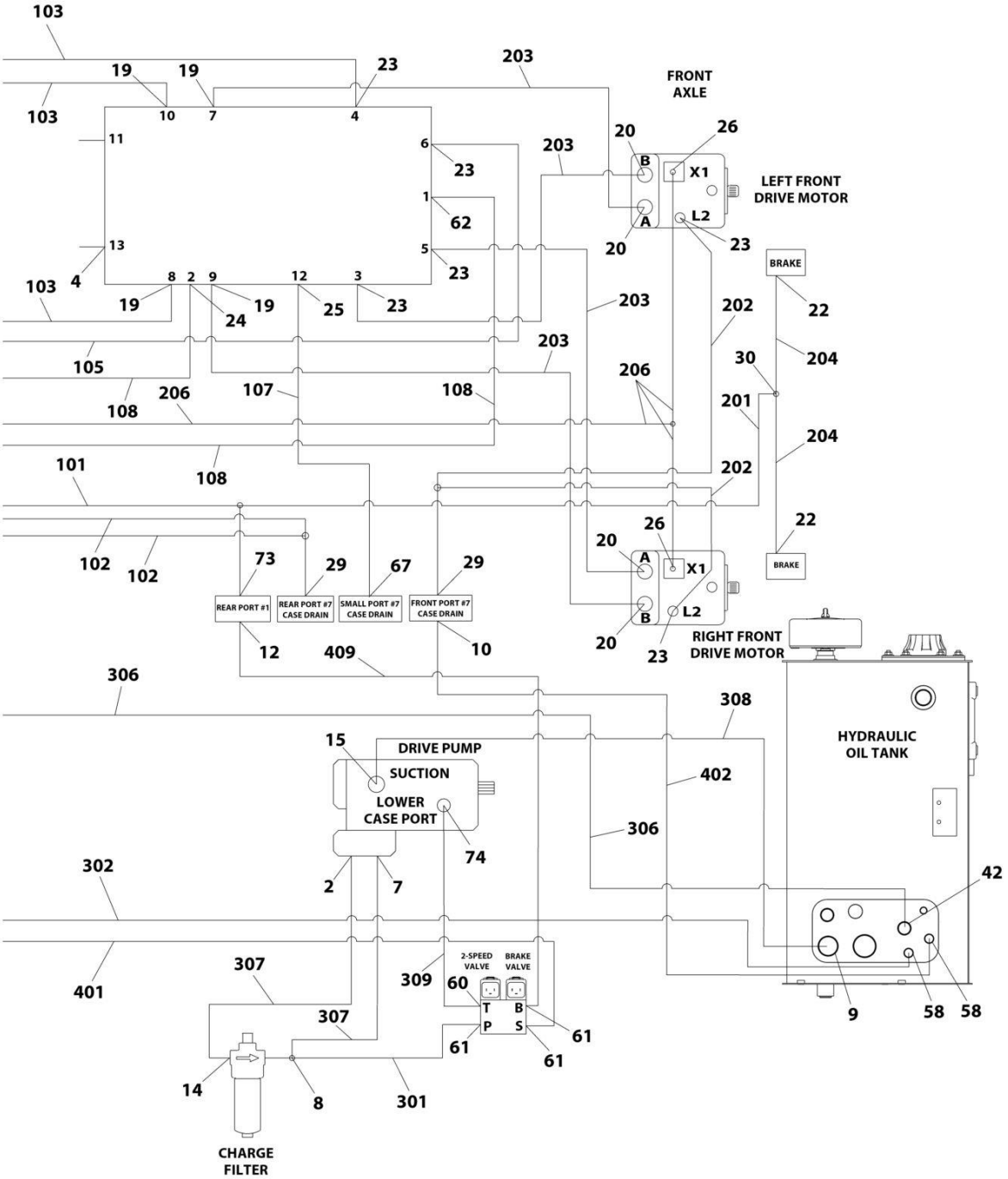
FRONT AXLE
LEFT FRONT DRIVE MOTOR
RIGHT FRONT DRIVE MOTOR
BRAKE
BRAKE
REAR PORT #1
REAR PORT #7 CASE DRAIN
SMALL PORT #7 CASE DRAIN
FRONT PORT #7 CASE DRAIN
DRIVE PUMP
SUCTION
LOWER CASE PORT
HYDRAULIC OIL TANK
2-SPEED VALVE
BRAKE VALVE
CHARGE FILTER
ART_1001178204_2OF3

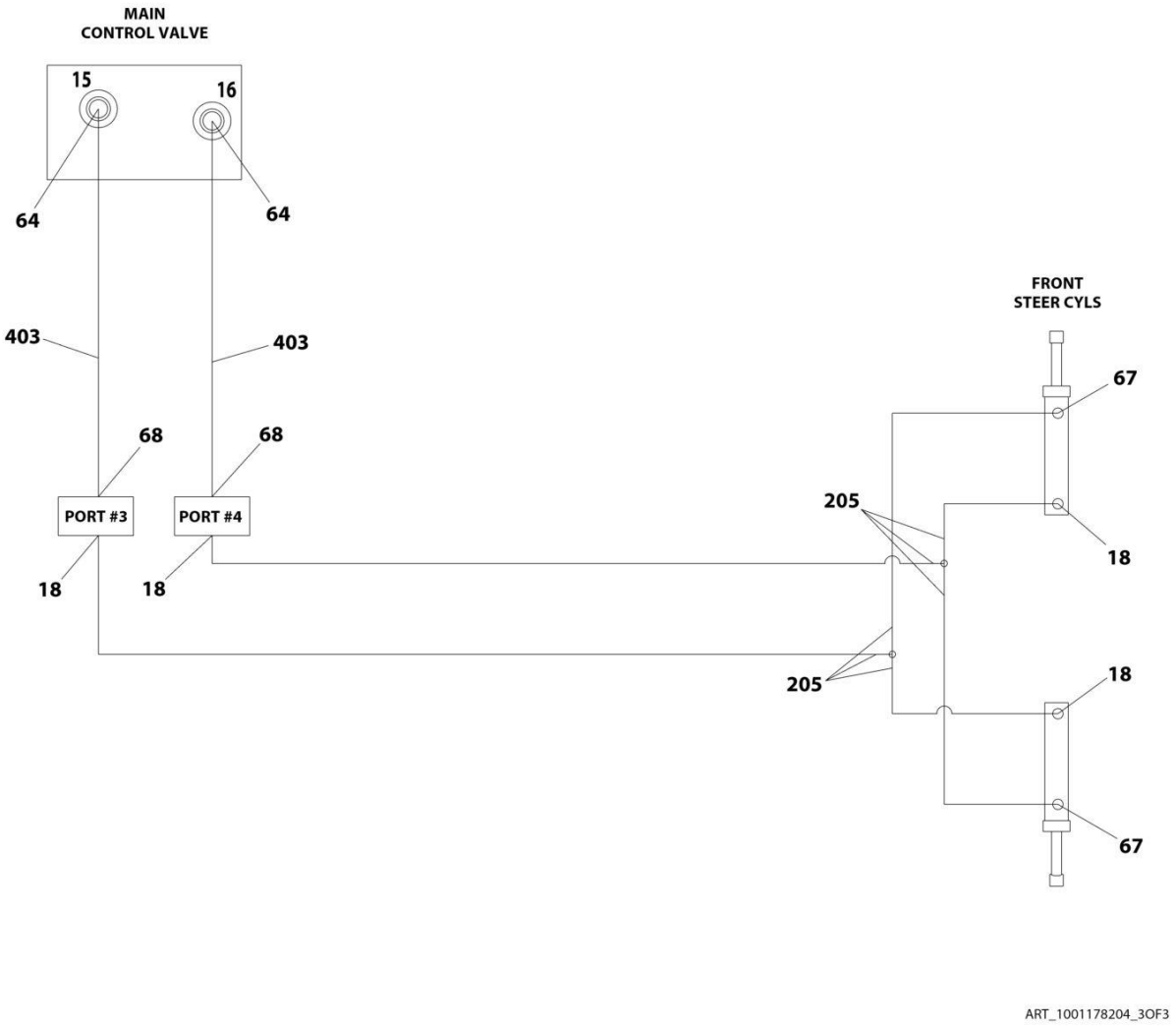
MAIN
CONTROL VALVE
15
16
64
64
403
403
68
68
PORT #3
PORT #4
18
18
FRONT
STEER CYLS
67
205
18
205
18
67
ART_1001178204_3OF3

FIGURE 7-2. HYDRAULIC DIAGRAM - DRIVE (4WD/2WS WITHOUT TOW PACKAGE/WITHOUT ARCTIC PACKAGE)

ITEM	PART NUMBER	QTY	DESCRIPTION	REV
	1001178204	Ref	DRIVE HYDRAULIC DIAGRAM - 4WD/2WS	J
2	2220800	1	Fitting, Straight ORB/FL	
3	2220582	1	Fitting, Straight ORB/FL	
4	2220238	1	Plug	
5	2220671	1	Fitting, 90 JIC/ORB	
7	2220374	1	Fitting, Straight JIC/ORB	
8	1001199394	1	Fitting, Tee JIC/ORB/JIC	
9	2220380	1	Fitting, Straight ORB/FL	
10	2220375	1	Fitting, Straight ORB/FL	
12	2220468	1	Fitting, Straight ORB/FL	
13	2220578	1	Fitting, 90 JIC/ORB	
14	2220596	1	Fitting, 90 JIC/FL	
15	8770050	1	Fitting, 90 JIC/ORB	
17	2110406	2	Fitting, Straight ORFS/ORB	
18	2110606	4	Fitting, Straight ORFS/ORB	
19	2110808	6	Fitting, Straight ORFS/ORB	
20	2110812	8	Fitting, Straight ORFS/ORB	
21	2111616	4	Fitting, Straight ORFS/ORB	
22	2110404	4	Fitting, Straight ORFS/ORB	
23	2130808	6	Fitting, 90 ORFS/ORB	
24	2131616	3	Fitting, 90 ORFS/ORB	
25	2130604	1	Fitting, 90 ORFS/ORB	
26	2130406	2	Fitting, 90 ORFS/ORB	
27	2150406	2	Fitting, 45 ORFS/ORB	
29	2170408	2	Fitting, Tee ORFS/ORFS/ORB	
30	2170504	2	Fitting, Tee ORFS	
31	2220237	1	Plug	
42	2220451	1	Fitting, Straight JIC/ORB	
58	2220373	2	Fitting, Straight JIC/ORB	
60	2220940	1	Fitting, 90 ORB/FL	
61	2220466	3	Fitting, 90 ORB/FL	
62	2151616	1	Fitting, 90 ORFS/ORB	
64	2220371	2	Fitting, Straight JIC/ORB	
67	2130606	3	Fitting, 90 ORFS/ORB	
68	2220473	2	Fitting, 90 ORB/FL	
73	1001198338	1	Fitting, Tee ORFS/ORB	
74	1001215296	1	Fitting, 90 JIC/SORB	
100	1001270069	1	Arctic Towbar Hose Kit	
101	2753622	1	Hose	
102	2753686	2	Hose	
103	2753971	3	Hose	
104	2754337	2	Hose	
105	2754338	1	Hose	
106	1001198340	1	Hose	
107	2753626	1	Hose	
108	2753634	1	Hose	
200	1001270630	1	Front Hose Kit	
201	2753542	1	Hose	
202	2753628	2	Hose	

ITEM	PART NUMBER	QTY	DESCRIPTION	REV
203	2753970	4	Hose	
204	2754512	2	Hose	
205	1001198333	2	Hose	
206	1001198341	1	Hose	
300	1001270090	1	Arctic Towbar Hose Kit	
301	2752434	1	Hose	
302	2752938	1	Hose	
306	1001188135	1	Hose	
307	2752495	1	Hose	
308	2752754	1	Hose	
309	1001151354	1	Hose	
400	1001270091	1	Arctic Towbar Hose Kit	
401	2751399	1	Hose	
402	2751500	1	Hose	
403	2752489	2	Hose	
407	1001156332	1	Hose	
408	1001156333	1	Hose	
409	2752997	1	Hose	

FIGURE 7-3. HYDRAULIC DIAGRAM - DRIVE (4WD/2WS WITHOUT TOW PACKAGE/WITH ARCTIC PACKAGE)

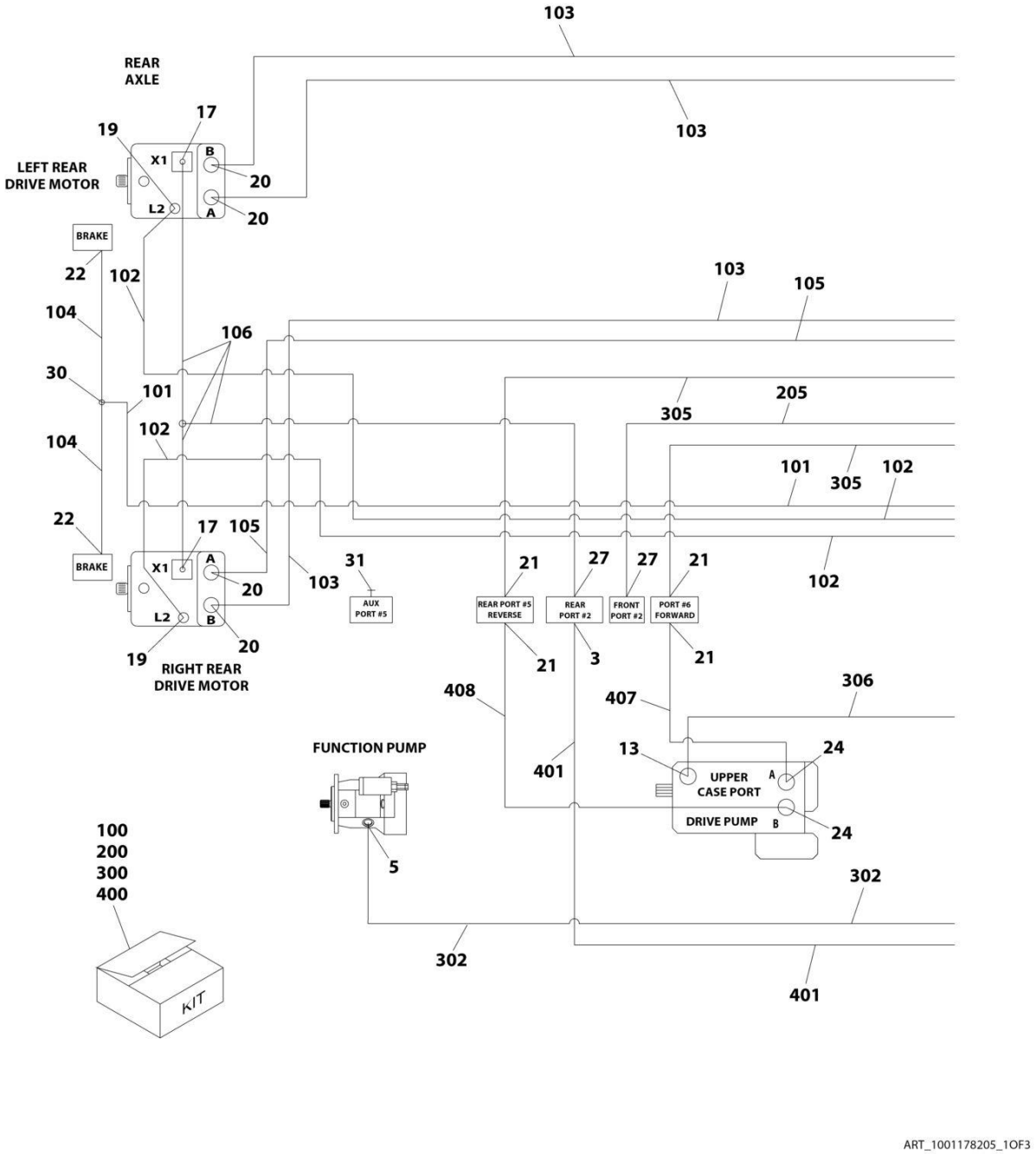

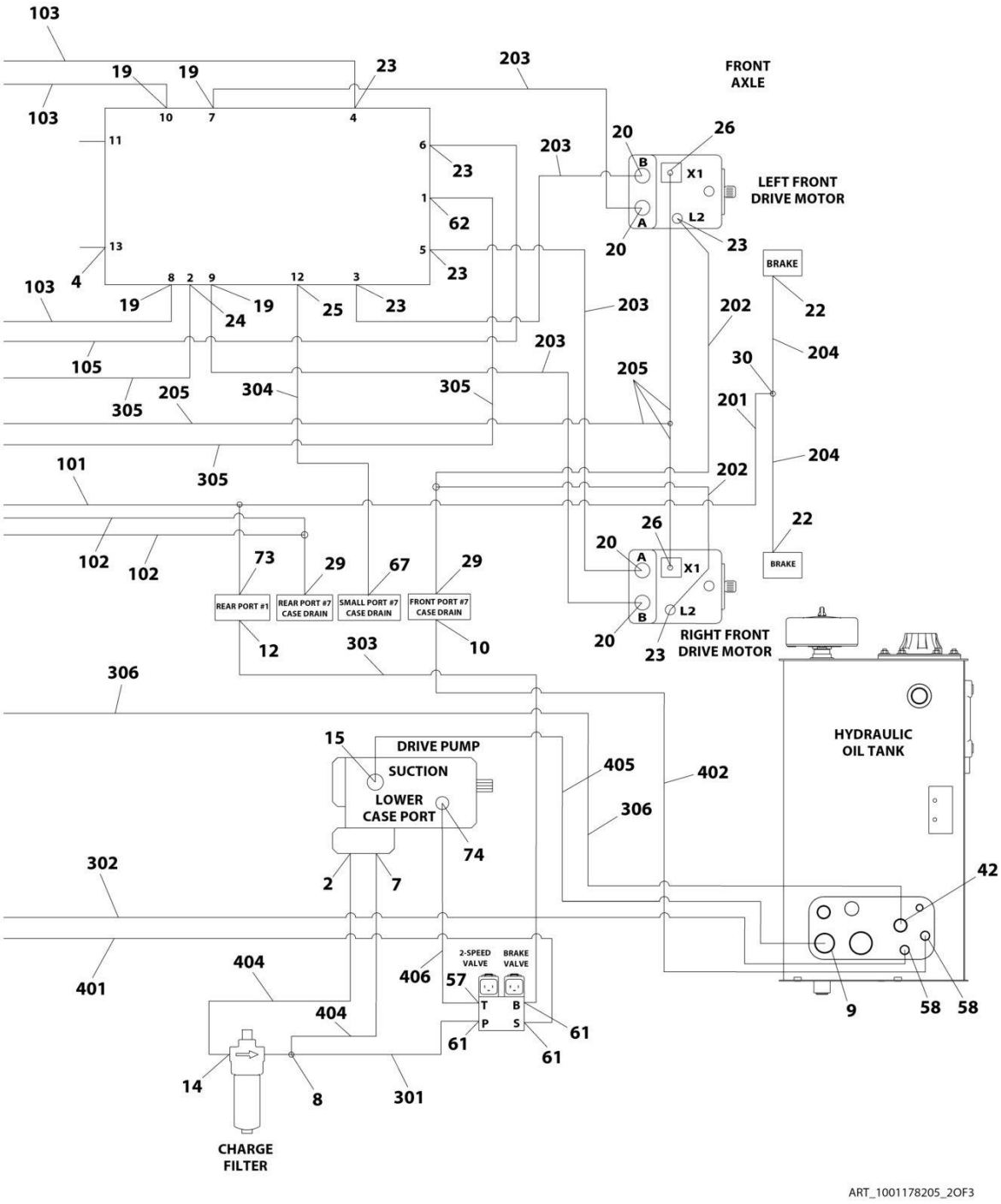
FRONT AXLE
LEFT FRONT DRIVE MOTOR
RIGHT FRONT DRIVE MOTOR
BRAKE
BRAKE
REAR PORT #1
REAR PORT #7 CASE DRAIN
SMALL PORT #7 CASE DRAIN
FRONT PORT #7 CASE DRAIN
DRIVE PUMP
SUCTION
LOWER CASE PORT
HYDRAULIC OIL TANK
2-SPEED VALVE
BRAKE VALVE
CHARGE FILTER
ART_1001178205_2OF3

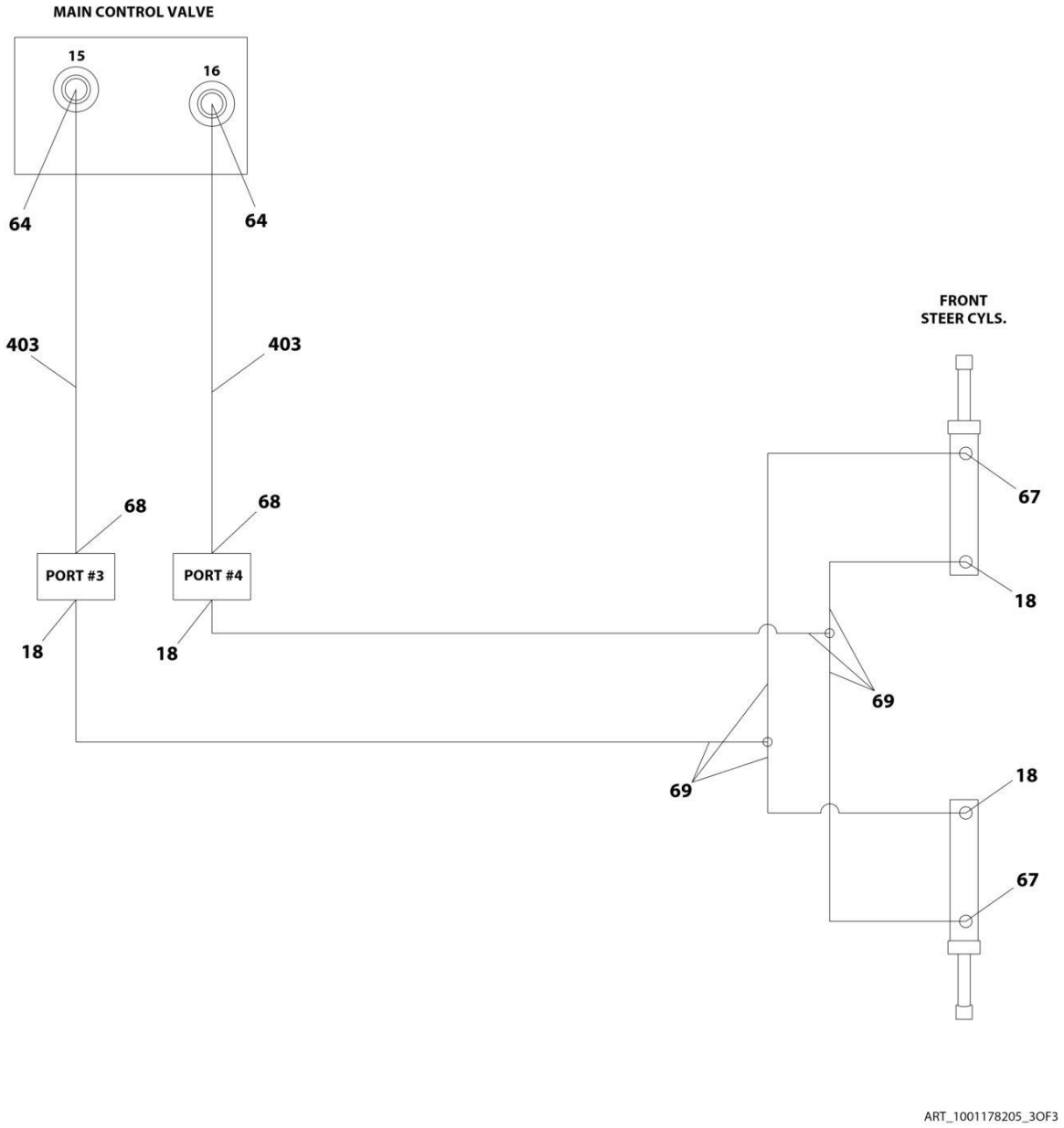
MAIN CONTROL VALVE
15
16
64
64
403
403
68
68
PORT #3
PORT #4
18
18
FRONT
STEER CYLS.
67
18
69
69
18
67
ART_1001178205_3OF3

FIGURE 7-3. HYDRAULIC DIAGRAM - DRIVE (4WD/2WS WITHOUT TOW PACKAGE/WITH ARCTIC PACKAGE)

ITEM	PART NUMBER	QTY	DESCRIPTION	REV
	1001178205	Ref	DRIVE HYDRAULIC DIAGRAM - 4WD/2WS	H
2	2220800	1	Fitting, Straight ORB/FL	
3	2220582	1	Fitting, Straight ORB/FL	
4	2220238	1	Plug	
5	2220671	1	Fitting, 90 JIC/ORB	
7	2220374	1	Fitting, Straight JIC/ORB	
8	1001199394	1	Fitting, Tee JIC/ORB/JIC	
9	2220380	1	Fitting, Straight ORB/FL	
10	2220375	1	Fitting, Straight ORB/FL	
12	2220468	1	Fitting, Straight ORB/FL	
13	2220578	1	Fitting, 90 JIC/ORB	
14	2220596	1	Fitting, 90 JIC/FL	
15	8770050	1	Fitting, 90 JIC/ORB	
17	2110406	2	Fitting, Straight ORFS/ORB	
18	2110606	4	Fitting, Straight ORFS/ORB	
19	2110808	6	Fitting, Straight ORFS/ORB	
20	2110812	8	Fitting, Straight ORFS/ORB	
21	2111616	4	Fitting, Straight ORFS/ORB	
22	2110404	4	Fitting, Straight ORFS/ORB	
23	2130808	6	Fitting, 90 ORFS/ORB	
24	2131616	3	Fitting, 90 ORFS/ORB	
25	2130604	1	Fitting, 90 ORFS/ORB	
26	2130406	2	Fitting, 90 ORFS/ORB	
27	2150406	2	Fitting, 45 ORFS/ORB	
29	2170408	2	Fitting, Tee ORFS/ORFS/ORB	
30	2170504	2	Fitting, Tee ORFS	
31	2220237	1	Plug	
42	2220451	1	Fitting, Straight JIC/ORB	
57	2220940	1	Fitting, 90 ORB/FL	
58	2220373	2	Fitting, Straight JIC/ORB	
61	2220466	3	Fitting, 90 ORB/FL	
62	2151616	1	Fitting, 90 ORFS/ORB	
64	2220371	2	Fitting, Straight JIC/ORB	
67	2130606	3	Fitting, 90 ORFS/ORB	
68	2220473	2	Fitting, 90 ORB/FL	
69	1001198333	2	Hose	
73	1001198338	1	Fitting, Tee ORFS/ORB	
74	1001215296	1	Fitting, 90 JIC/SORB	
100	1001270069	1	Arctic Towbar Hose Kit	
101	2753622	1	Hose	
102	2753686	2	Hose	
103	2753971	3	Hose	
104	2754337	2	Hose	
105	2754338	1	Hose	
106	1001198340	1	Hose	
200	1001270073	1	Arctic Towbar Hose Kit	
201	2753542	1	Hose	
202	2754720	2	Hose	
203	2754743	4	Hose	

ITEM	PART NUMBER	QTY	DESCRIPTION	REV
204	1001106957	2	Hose	
205	1001204269	1	Hose	
300	1001270090	1	Arctic Towbar Hose Kit	
301	2752434	1	Hose	
302	2752938	1	Hose	
303	2752997	1	Hose	
304	2753626	1	Hose	
305	2753634	2	Hose	
306	1001188135	1	Hose	
400	1001270091	1	Arctic Towbar Hose Kit	
401	2751399	1	Hose	
402	2751500	1	Hose	
403	2752489	2	Hose	
404	2752495	2	Hose	
405	2752754	1	Hose	
406	1001151354	1	Hose	
407	1001156332	1	Hose	
408	1001156333	1	Hose	

FIGURE 7-4. HYDRAULIC DIAGRAM - DRIVE (4WD/2WS WITH TOW PACKAGE/WITHOUT ARCTIC PACKAGE)

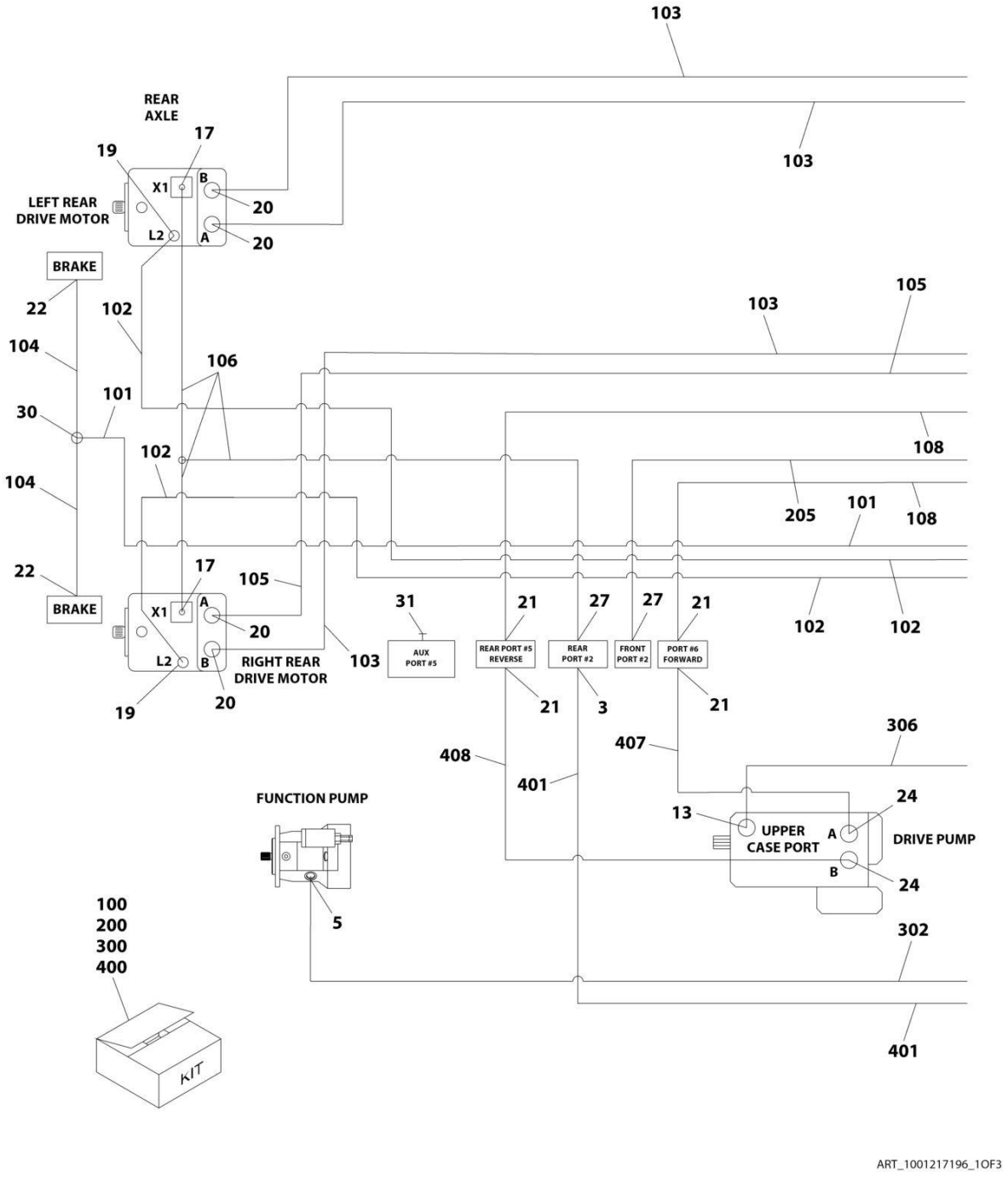

ART_1001217196_1OF3

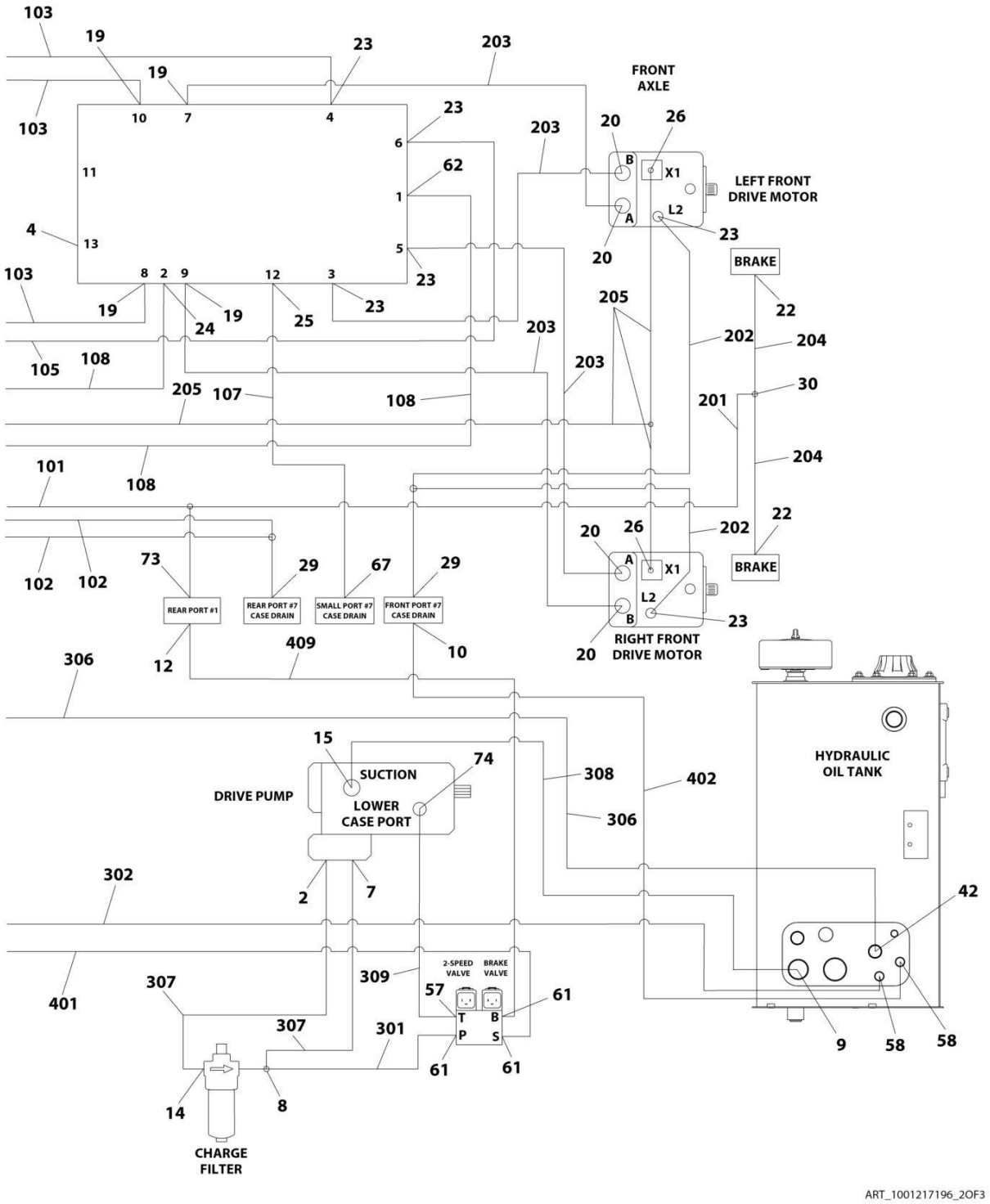
FRONT AXLE
LEFT FRONT DRIVE MOTOR
RIGHT FRONT DRIVE MOTOR
BRAKE
BRAKE
REAR PORT #1
REAR PORT #7 CASE DRAIN
SMALL PORT #7 CASE DRAIN
FRONT PORT #7 CASE DRAIN
DRIVE PUMP
SUCTION
LOWER CASE PORT
HYDRAULIC OIL TANK
2-SPEED VALVE
BRAKE VALVE
CHARGE FILTER
ART_1001217196_2OF3

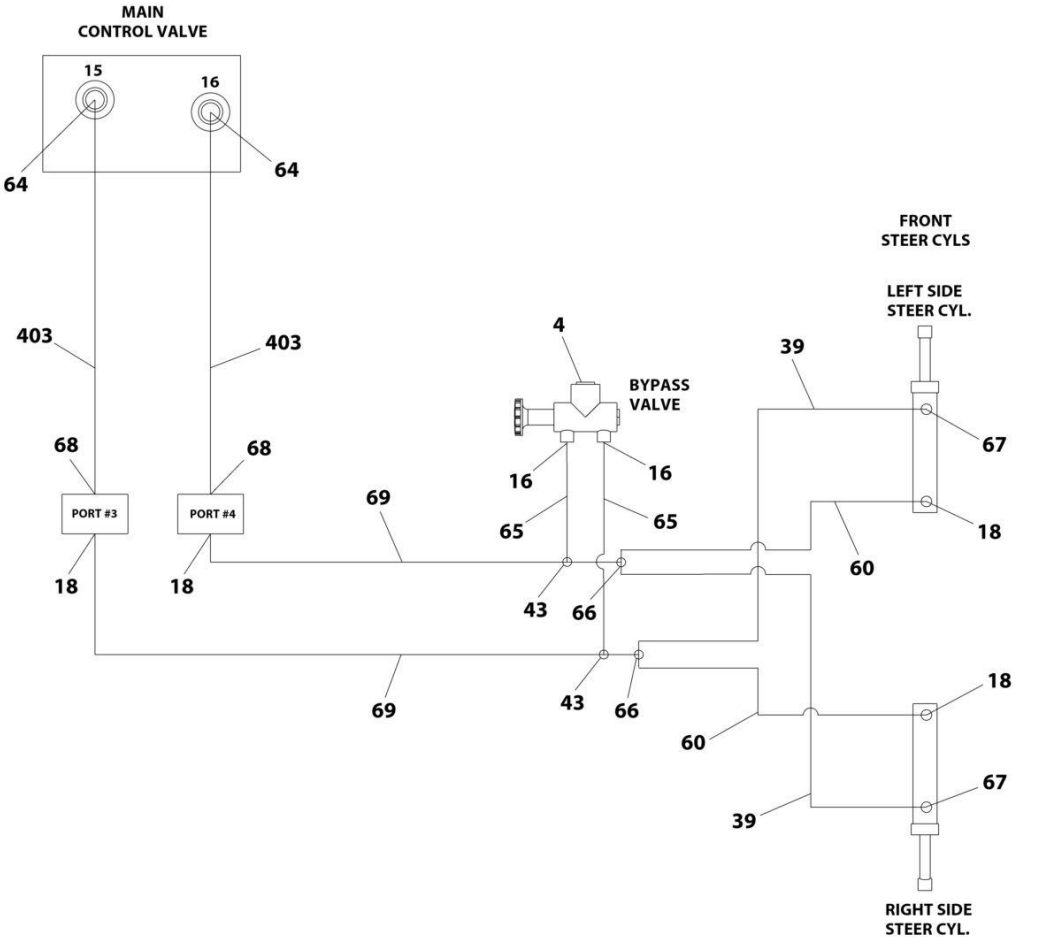
MAIN
CONTROL VALVE
15
16
64
64
403
403
68
68
PORT #3
PORT #4
18
18
69
69
4
BYPASS
VALVE
16
16
65
65
43
66
43
66
39
39
FRONT
STEER CYLS
LEFT SIDE
STEER CYL.
67
18
60
60
18
67
RIGHT SIDE
STEER CYL.
ART_1001217196_3OF3

FIGURE 7-4. HYDRAULIC DIAGRAM - DRIVE (4WD/2WS WITH TOW PACKAGE/WITHOUT ARCTIC PACKAGE)

ITEM	PART NUMBER	QTY	DESCRIPTION	REV
	1001217196	Ref	Drive Hydraulic Diagram - 4WD/2WS	D
2	2220800	1	Fitting, Straight ORB/FL	
3	2220582	1	Fitting, Straight ORB/FL	
4	2220238	2	Plug	
5	2220671	1	Fitting, 90 JIC/ORB	
7	2220374	1	Fitting, Straight JIC/ORB	
8	1001199394	1	Fitting, Tee JIC/ORB/JIC	
9	2220380	1	Fitting, Straight ORB/FL	
10	2220375	1	Fitting, Straight ORB/FL	
12	2220468	1	Fitting, Straight ORB/FL	
13	2220578	1	Fitting, 90 JIC/ORB	
14	2220596	1	Fitting, 90 ORB/FL	
15	8770050	1	Fitting, 90 JIC/ORB	
16	2110608	2	Fitting, Straight ORFS/ORB	
17	2110406	2	Fitting, Straight ORFS/ORB	
18	2110606	4	Fitting, Straight ORFS/ORB	
19	2110808	6	Fitting, Straight ORFS/ORB	
20	2110812	8	Fitting, Straight ORFS/OBS	
21	2131616	4	Fitting, 90 ORFS/ORB	
22	2110404	4	Fitting, Straight ORFS/ORB	
23	2130808	6	Fitting, 90 ORFS/ORB	
24	2111616	3	Fitting, Straight ORFS/ORB	
25	2130604	1	Fitting, 90 ORFS/OBS	
26	2130406	2	Fitting, 90 ORFS/OBS	
27	2150406	2	Fitting, 45 ORFS/ORB	
29	2170408	2	Fitting, Tee ORFS/ORFS/OBS	
30	2170504	2	Fitting, Tee ORFS	
31	2220237	1	Plug	
39	2753656	2	Hose	
42	2220451	1	Fitting, Straight JIC/ORB	
43	2170706	2	Fitting, Tee - ORFS/ORFS/ORFS	
57	2220940	1	Fitting, 90 ORB/FL	
58	2220373	2	Fitting, Straight JIC/ORB	
60	1001159340	2	Hose	
61	2220466	3	Fitting, 90 ORB/FL	
62	2151616	1	Fitting, 45 ORFS/ORB	
64	2220371	2	Fitting, Straight JIC/ORB	
65	2753879	2	Hose	
66	2170506	2	Fitting, Tee ORFS/ORFS/ORFS	
67	2130606	3	Fitting, 90 ORFS/ORB	
68	2220473	2	Fitting, 90 ORB/FL	
69	2753732	2	Hose	
73	1001198338	1	Fitting, Tee ORFS/ORB	
74	1001215296	1	Fitting, 90 JIC/SORB	
100	1001270069	1	Arctic Towbar Hose Kit	
101	2753622	1	Hose	
102	2753686	2	Hose	
103	2753971	3	Hose	
104	2754337	2	Hose	

ITEM	PART NUMBER	QTY	DESCRIPTION	REV
105	2754338	1	Hose	
106	1001198340	1	Hose	
107	2753626	1	Hose	
108	2753634	1	Hose	
200	1001270073	1	Arctic Towbar Hose Kit	
201	2753542	1	Hose	
202	2754720	2	Hose	
203	2754743	4	Hose	
204	1001106957	2	Hose	
205	1001204269	1	Hose	
300	1001270090	1	Arctic Towbar Hose Kit	
301	2752434	1	Hose	
302	2752938	1	Hose	
306	1001188135	1	Hose	
307	2752495	1	Hose	
308	2752754	1	Hose	
309	1001151354	1	Hose	
400	1001270091	1	Arctic Towbar Hose Kit	
401	2751399	1	Hose	
402	2751500	1	Hose	
403	2752489	2	Hose	
407	1001156332	1	Hose	
408	1001156333	1	Hose	
409	2752997	1	Hose	

FIGURE 7-5. HYDRAULIC DIAGRAM - DRIVE (4WD/2WS WITH TOW PACKAGE/WITH ARCTIC PACKAGE)

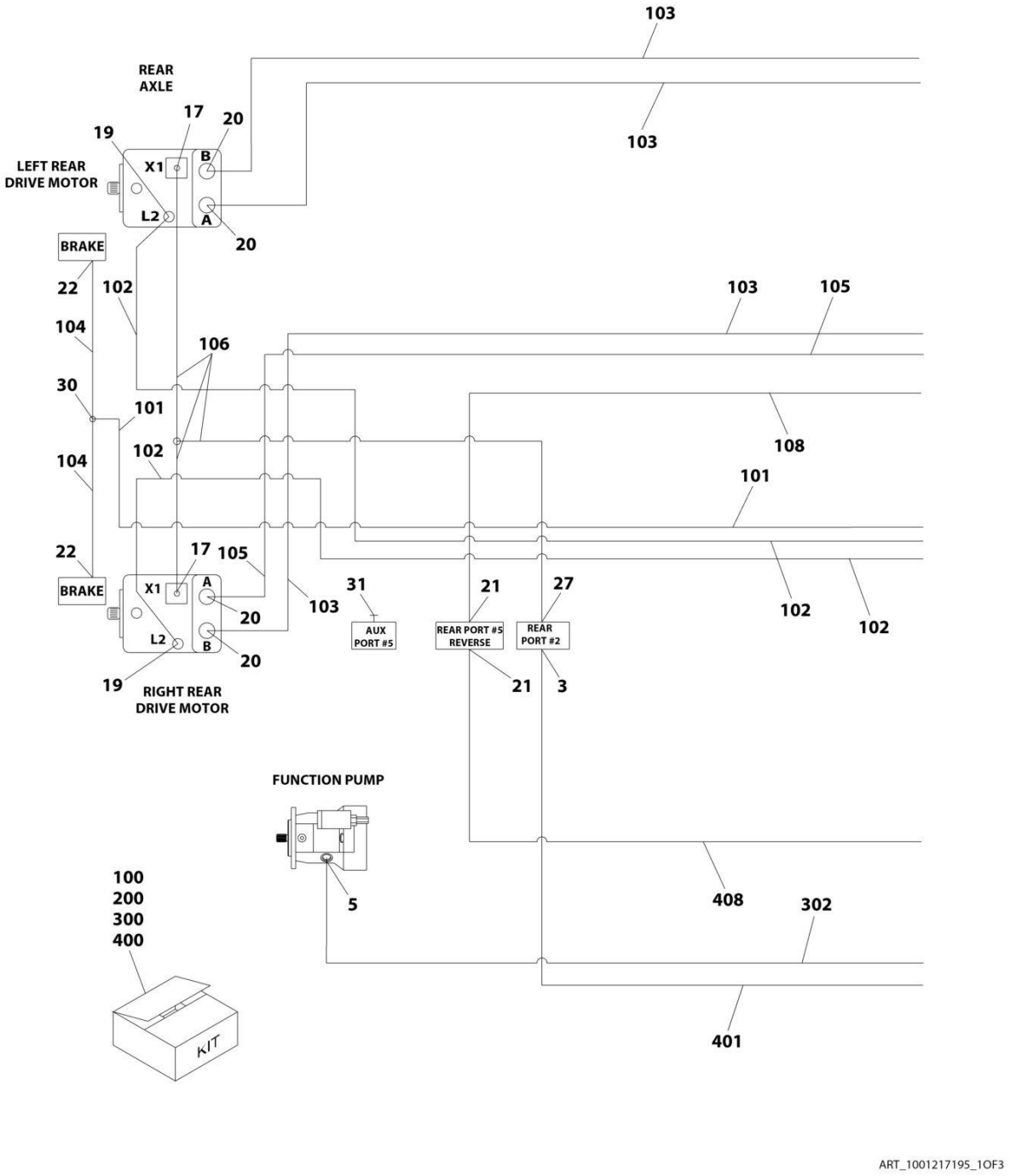

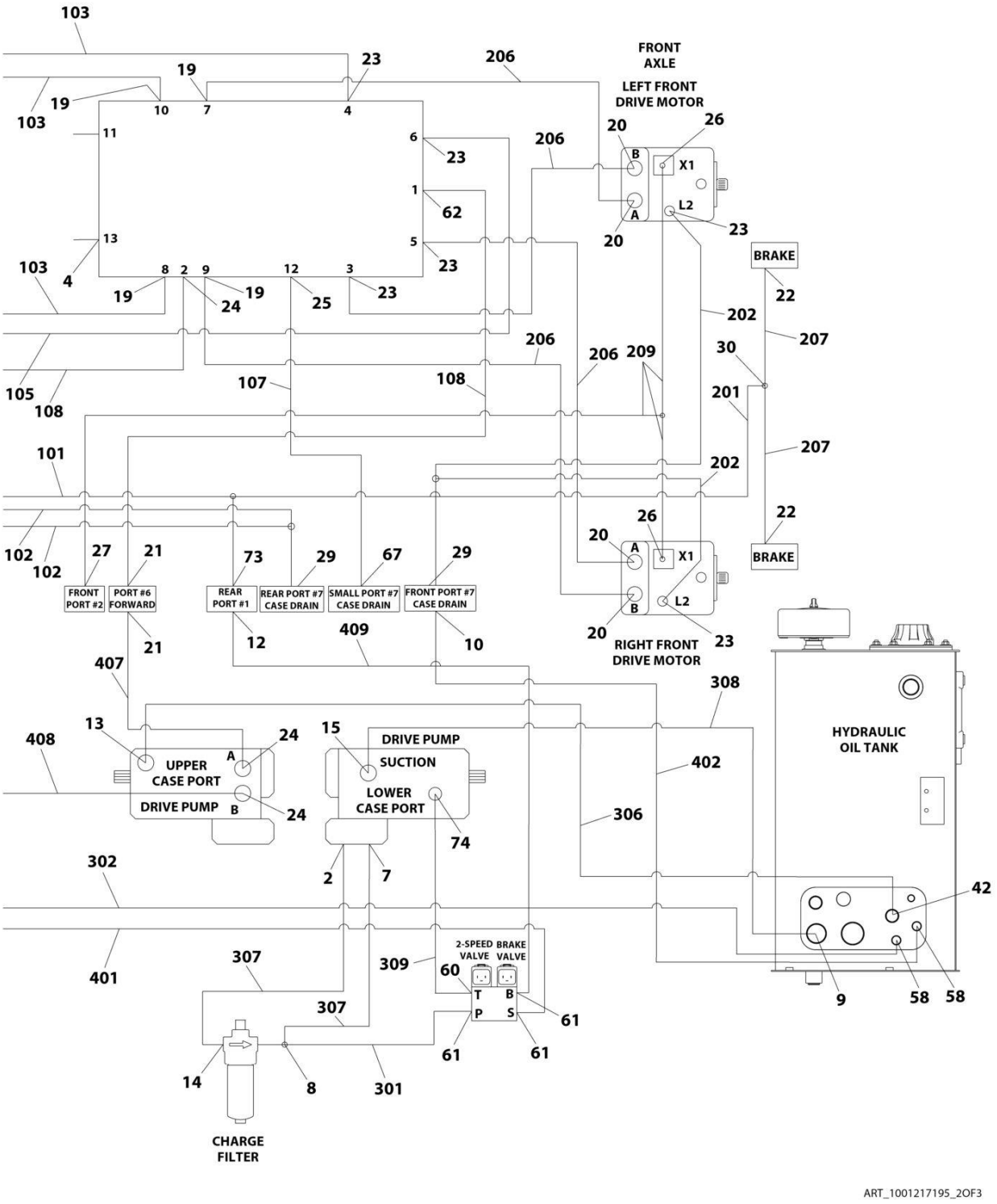
FRONT AXLE
LEFT FRONT DRIVE MOTOR
RIGHT FRONT DRIVE MOTOR
BRAKE
BRAKE
FRONT PORT #2
PORT #6 FORWARD
REAR PORT #1
REAR PORT #7 CASE DRAIN
SMALL PORT #7 CASE DRAIN
FRONT PORT #7 CASE DRAIN
UPPER CASE PORT
DRIVE PUMP
DRIVE PUMP SUCTION
LOWER CASE PORT
2-SPEED VALVE
BRAKE VALVE
HYDRAULIC OIL TANK
CHARGE FILTER
ART_1001217195_2OF3

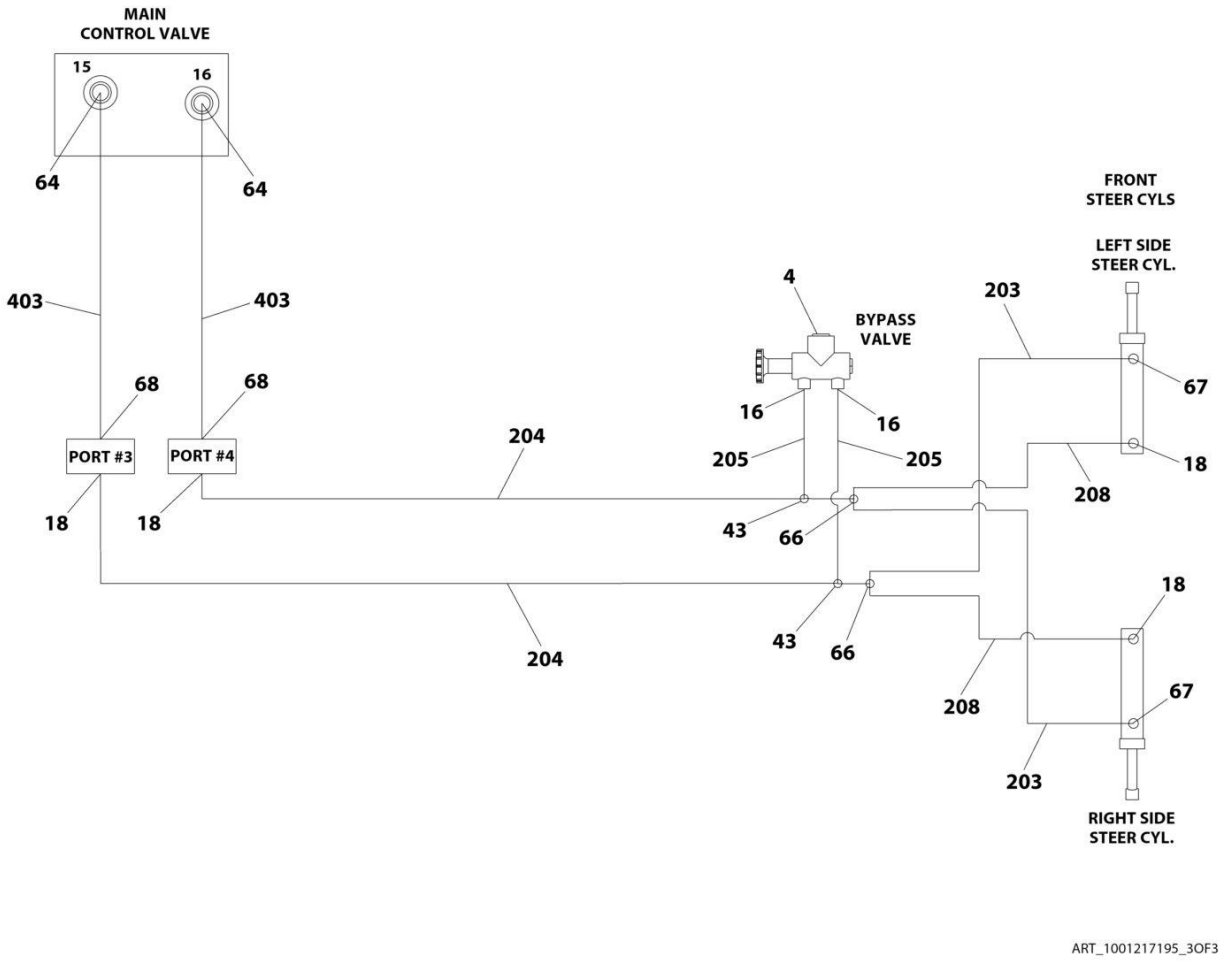
MAIN
CONTROL VALVE
15
16
64
64
403
403
68
68
PORT #3
PORT #4
18
18
204
204
4
BYPASS
VALVE
16
16
205
205
43
66
43
66
203
FRONT
STEER CYLS
LEFT SIDE
STEER CYL.
67
18
208
18
208
67
203
RIGHT SIDE
STEER CYL.
ART_1001217195_3OF3

FIGURE 7-5. HYDRAULIC DIAGRAM - DRIVE (4WD/2WS WITH TOW PACKAGE/WITH ARCTIC PACKAGE)

ITEM	PART NUMBER	QTY	DESCRIPTION	REV
	1001217195	Ref	HYDRAULIC DIAGRAM - DRIVE (4WD/2WS)	D
2	2220800	1	Fitting, Straight ORB/FL	
3	2220582	1	Fitting, Straight ORB/FL	
4	2220238	2	Plug	
5	2220671	1	Fitting, 90 JIC/ORB	
7	2220374	1	Fitting, Straight JIC/ORB	
8	1001199394	1	Fitting, Tee JIC/ORB/JIC	
9	2220380	1	Fitting, Straight ORB/FL	
10	2220375	1	Fitting, Straight ORB/FL	
12	2220468	1	Fitting, Straight ORB/FL	
13	2220578	1	Fitting, 90 JIC/ORB	
14	2220596	1	Fitting, 90 ORB/FL	
15	8770050	1	Fitting, 90 JIC/ORB	
16	2110608	2	Fitting, Straight ORFS/ORB	
17	2110406	2	Fitting, Straight ORFS/ORB	
18	2110606	4	Fitting, Straight ORFS/ORB	
19	2110808	6	Fitting, Straight ORFS/ORB	
20	2110812	8	Fitting, Straight ORFS/OBS	
21	2131616	4	Fitting, 90 ORFS/ORB	
22	2110404	4	Fitting, Straight ORFS/ORB	
23	2130808	6	Fitting, 90 ORFS/ORB	
24	2111616	3	Fitting, Straight ORFS/ORB	
25	2130604	1	Fitting, 90 ORFS/OBS	
26	2130406	2	Fitting, 90 ORFS/OBS	
27	2150406	2	Fitting, 45 ORFS/ORB	
29	2170408	2	Fitting, Tee ORFS/ORFS/OBS	
30	2170504	2	Fitting, Tee ORFS	
31	2220237	1	Plug	
42	2220451	1	Fitting, Straight JIC/ORB	
43	2170706	2	Fitting, Tee - ORFS/ORFS/ORFS	
58	2220373	2	Fitting, Straight JIC/ORB	
60	2220940	1	Fitting, 90 ORB/FL	
61	2220466	3	Fitting, 90 ORB/FL	
62	2151616	1	Fitting, 45 ORFS/ORB	
64	2220371	2	Fitting, Straight JIC/ORB	
66	2170506	2	Fitting, Tee ORFS/ORFS/ORFS	
67	2130606	3	Fitting, 90 ORFS/ORB	
68	2220473	2	Fitting, 90 ORB/FL	
73	1001198338	1	Fitting, Tee ORFS/ORB	
74	1001215296	1	Fitting, 90 JIC/SORB	
100	1001270069	1	Arctic Twobar Hose Kit	
101	2753622	1	Hose	
102	2753686	2	Hose	
103	2753971	3	Hose	
104	2754337	2	Hose	
105	2754338	1	Hose	
106	1001198340	1	Hose	
107	2753626	1	Hose	
108	2753634	1	Hose	

ITEM	PART NUMBER	QTY	DESCRIPTION	REV
200	1001270096	1	Towbar Front Hose Kit	
201	2753542	1	Hose	
202	2753628	2	Hose	
203	2753656	2	Hose	
204	2753732	2	Hose	
205	2753879	2	Hose	
206	2753970	4	Hose	
207	2754512	2	Hose	
208	1001159340	2	Hose	
209	1001198341	1	Hose	
300	1001270090	1	Arctic Twobar Hose Kit	
301	2752434	1	Hose	
302	2752938	1	Hose	
306	1001188135	1	Hose	
307	2752495	1	Hose	
308	2752754	1	Hose	
309	1001151354	1	Hose	
400	1001270091	1	Arctic Twobar Hose Kit	
401	2751399	1	Hose	
402	2751500	1	Hose	
403	2752489	2	Hose	
407	1001156332	1	Hose	
408	1001156333	1	Hose	
409	2752997	1	Hose	

FIGURE 7-6. HYDRAULIC DIAGRAM - STANDARD (Prior to SN 0300285430)

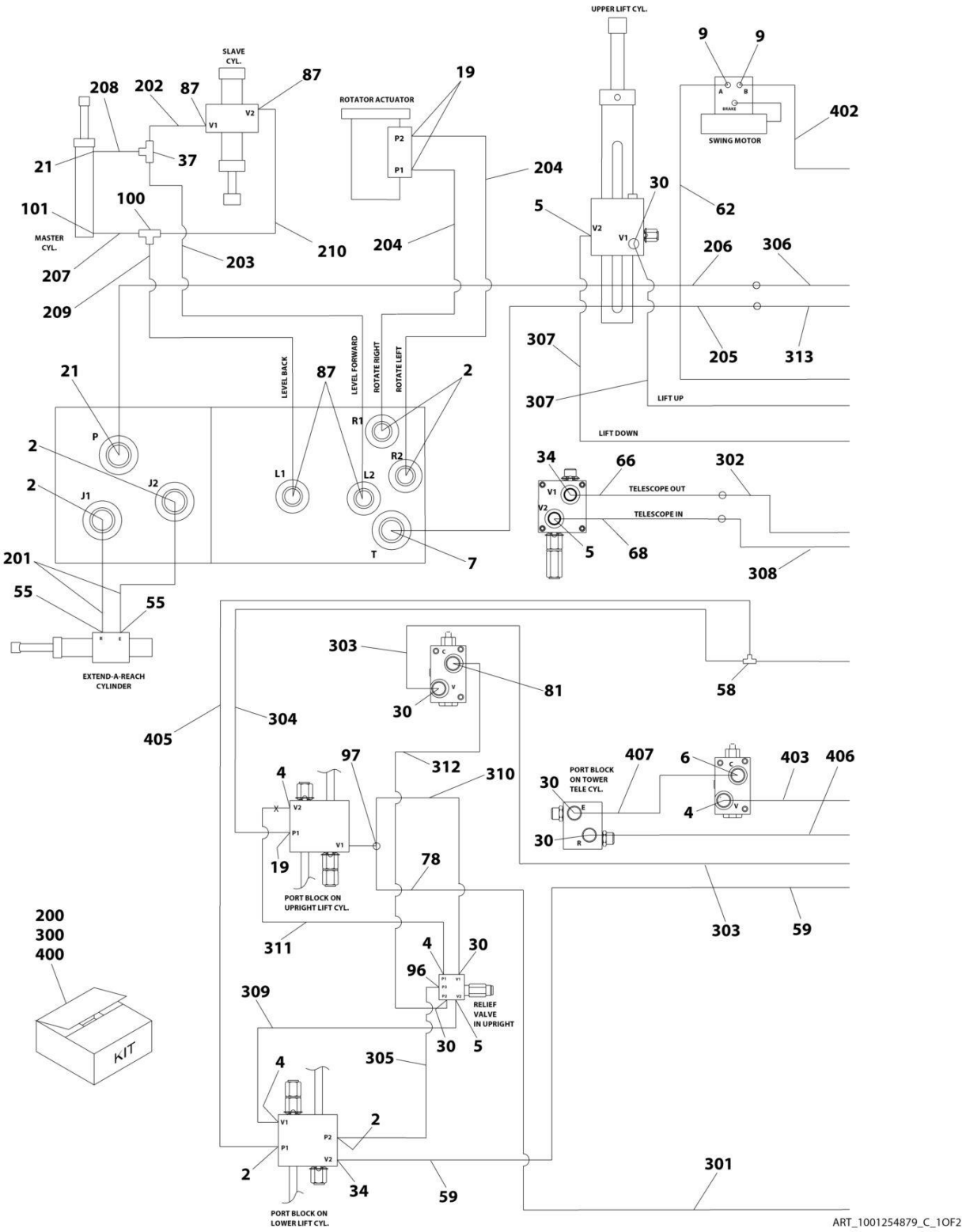

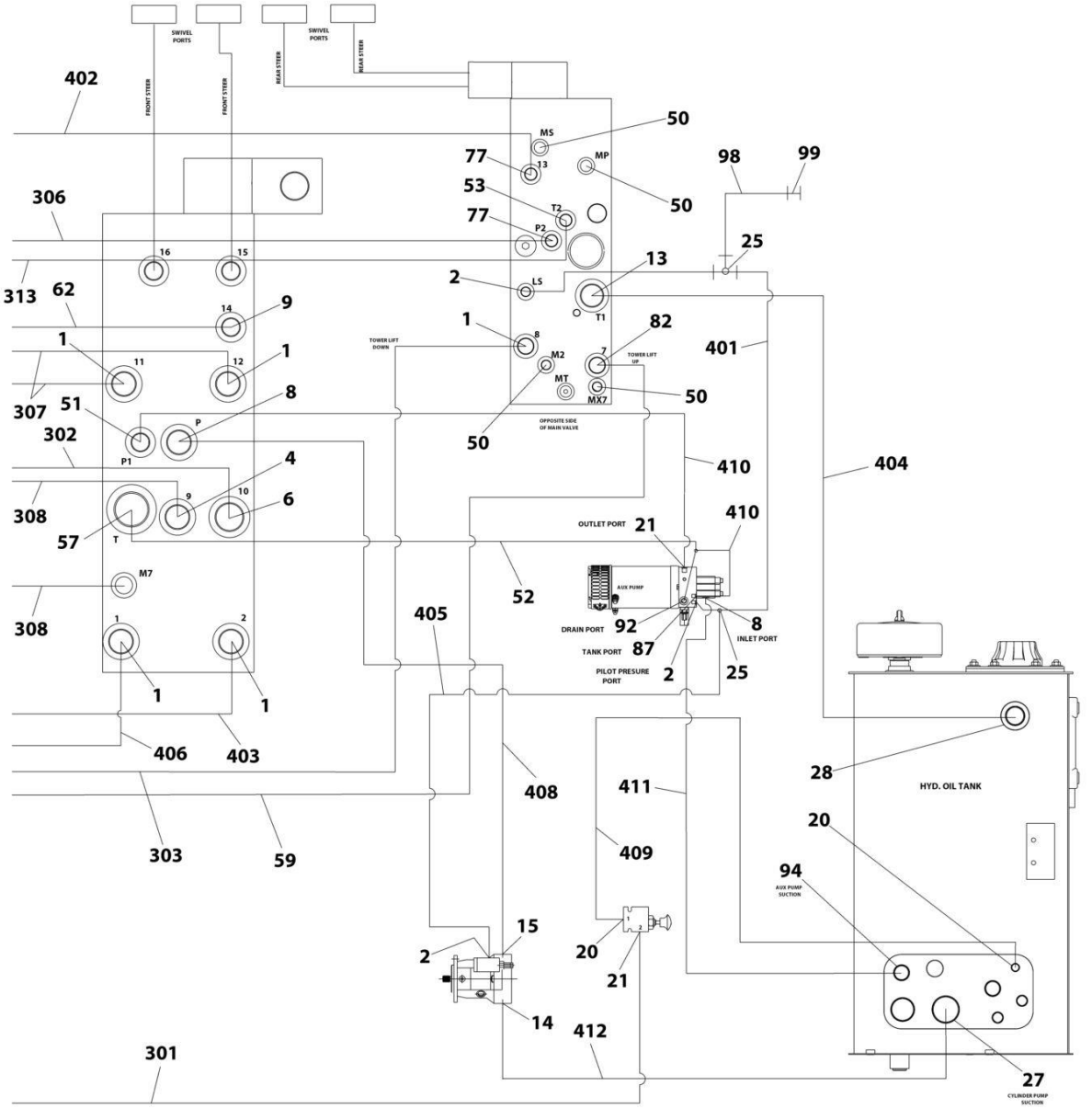

ART_1001254879_C_2OF2

FIGURE 7-6. HYDRAULIC DIAGRAM - STANDARD (Prior to SN 0300285430)

ITEM	PART NUMBER	QTY	DESCRIPTION	REV
	1001254879	Ref	STANDARD HYDRAULIC DIAGRAM	C
1	2220381	5	Fitting, Straight ORB/FL	
2	2220415	9	Fitting, Straight ORB/FL	
3	2753442	2	Hose	
4	2220373	5	Fitting, Straight ORB/FL	
5	2220500	3	Fitting, 45 ORB/FL	
6	2220947	2	Fitting, Straight ORB/FL	
7	2220600	1	Fitting, Straight JIC/ORB	
8	2220593	2	Fitting, Straight ORB/FL	
9	2220371	3	Fitting, Straight ORB/FL	
13	1001179329	1	Fitting, Straight JIC/ORB	
14	2220737	1	Split Flange Kit #24	
15	2220478	1	Split Flange Kit #16	
19	2220466	3	Fitting, 90 ORB/FL	
20	2220582	2	Fitting, Straight JIC/ORB	
21	2220473	4	Fitting, 90 ORB/FL	
25	2220605	2	Fitting, Tee FL/FL	
27	2220765	1	Fitting, Straight ORB/FL	
28	2220377	1	Fitting, Straight JIC/ORB	
30	2220596	6	Fitting, 90 ORB/FL	
34	2220852	2	Fitting, Straight ORB/FL	
37	2220490	1	Fitting, Tee FL/FL	
50	2221086	4	Fitting, Diagnostic Test Port, EM3A	
51	4640780	1	Fitting, Check Valve	
52	2753118	1	Hose	
53	1001136881	1	Fitting, 45 ORB/FG	
55	2220472	2	Fitting, 90 ORB/FL (800AJ)	
57	2220577	1	Fitting, Straight ORB/FL	
58	2221034	1	Fitting, Tee FL/FL/ORB	
59	2752768	1	Hose	
62	2752484	1	Hose	
66	2752767	1	Hose	
68	2753190	1	Hose	
77	2220501	2	Fitting, 45 ORB/FL	
78	4567757	1	Tube	
79	4100062	4	Protection, Hose (Not Shown - Located at Tower Boom Power Track)	
81	2221036	1	Fitting, 90 ORB/FL	
82	2220950	1	Fitting, 45 ORB/FL	
87	2220603	5	Fitting, Straight ORB/FL	
92	2220899	1	Fitting, Tee ORB/FL/FL	
94	2220451	1	Fitting, Straight JIC/ORB	
96	2220468	1	Fitting, Straight JIC/ORB	
97	1001215289	1	Fitting, Tee JIC/ORB/JIC	
98	2752995	1	Hose	
99	91143177	1	Fitting - Diagnostic Test Port	
100	2220362	1	Fitting, Tee FL/FL/FL	
101	2220726	1	Adapter, 90 SJIC/ORB	
102	1001136358	1	Sleeve, Abrasion (Not Shown)	
103	4240032	2	Tie-Strap (Not Shown)	

ITEM	PART NUMBER	QTY	DESCRIPTION	REV
200	1001256059	1	Upper Boom Hose Kit	
202	1001119602	1	Hose	
203	1001155673	1	Hose	
204	1001159707	2	Hose	
205	1001254846	1	Hose	
206	1001254847	1	Hose	
207	1001259466	1	Hose	
208	1001259467	1	Hose	
209	1001259468	1	Hose	
210	1001259470	1	Hose	
300	1001183226	1	Lower Boom Hose Kit	
301	2752468	1	Hose	
302	2752766	1	Hose	
303	2752930	1	Hose	
304	2752978	1	Hose	
305	2753008	1	Hose	
306	2753123	1	Hose	
307	2753189	2	Hose	
308	2753191	1	Hose	
309	2753195	1	Hose	
310	2753196	1	Hose	
311	2753197	1	Hose	
312	2753199	1	Hose	
313	1001182162	1	Hose	
400	1001270097	1	Turntable Hose Kit	
401	2752434	1	Hose	
402	2752461	1	Hose	
403	2752494	1	Hose	
404	2752723	1	Hose	
405	2753010	2	Hose	
406	2753192	1	Hose	
407	2753200	1	Hose	
408	2753231	1	Hose	
409	2753274	1	Hose	
410	1001109690	2	Hose	
411	1001149410	1	Hose	
412	1001179079	1	Hose	

FIGURE 7-7. HYDRAULIC DIAGRAM - STANDARD (SN 0300285430 to Present)

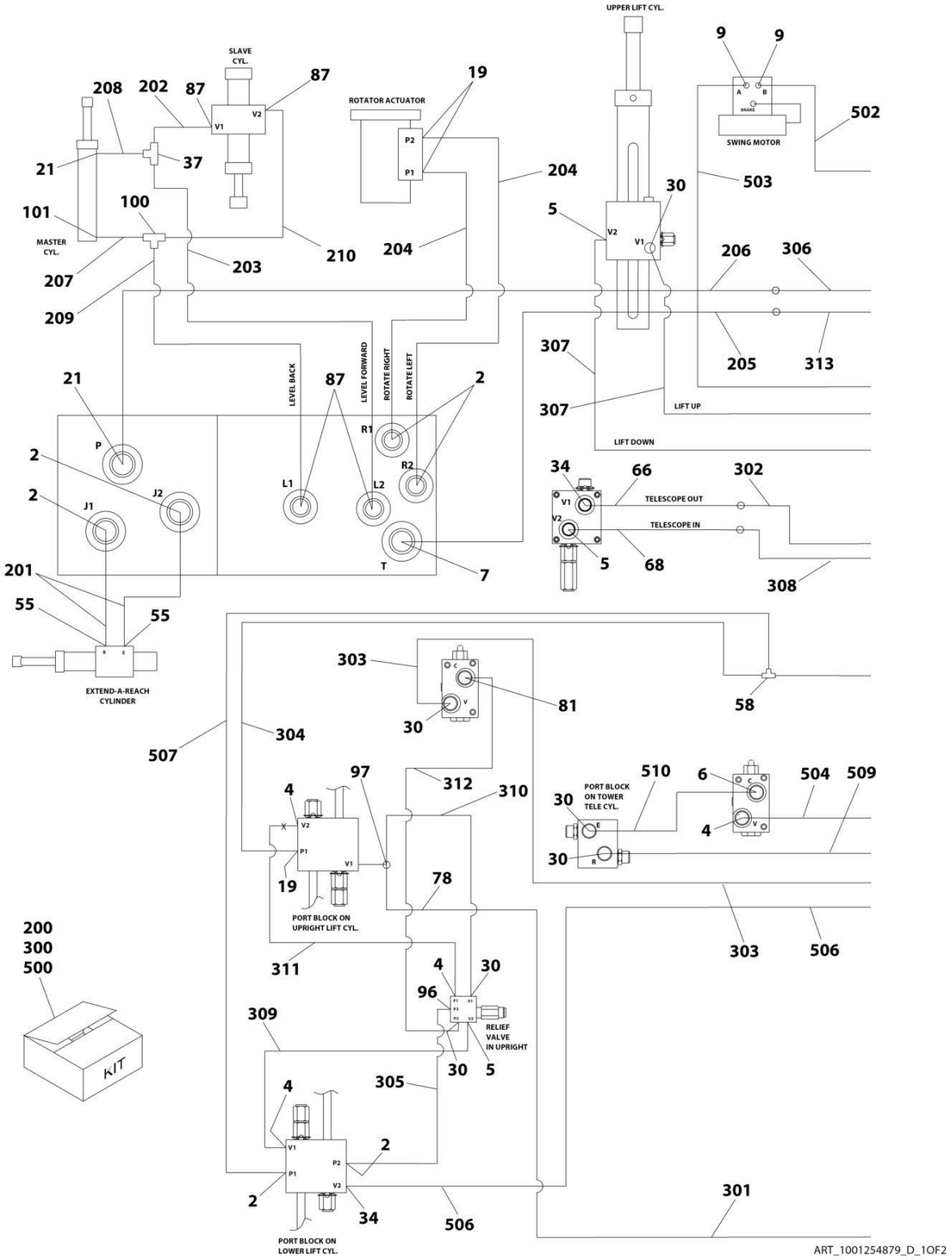

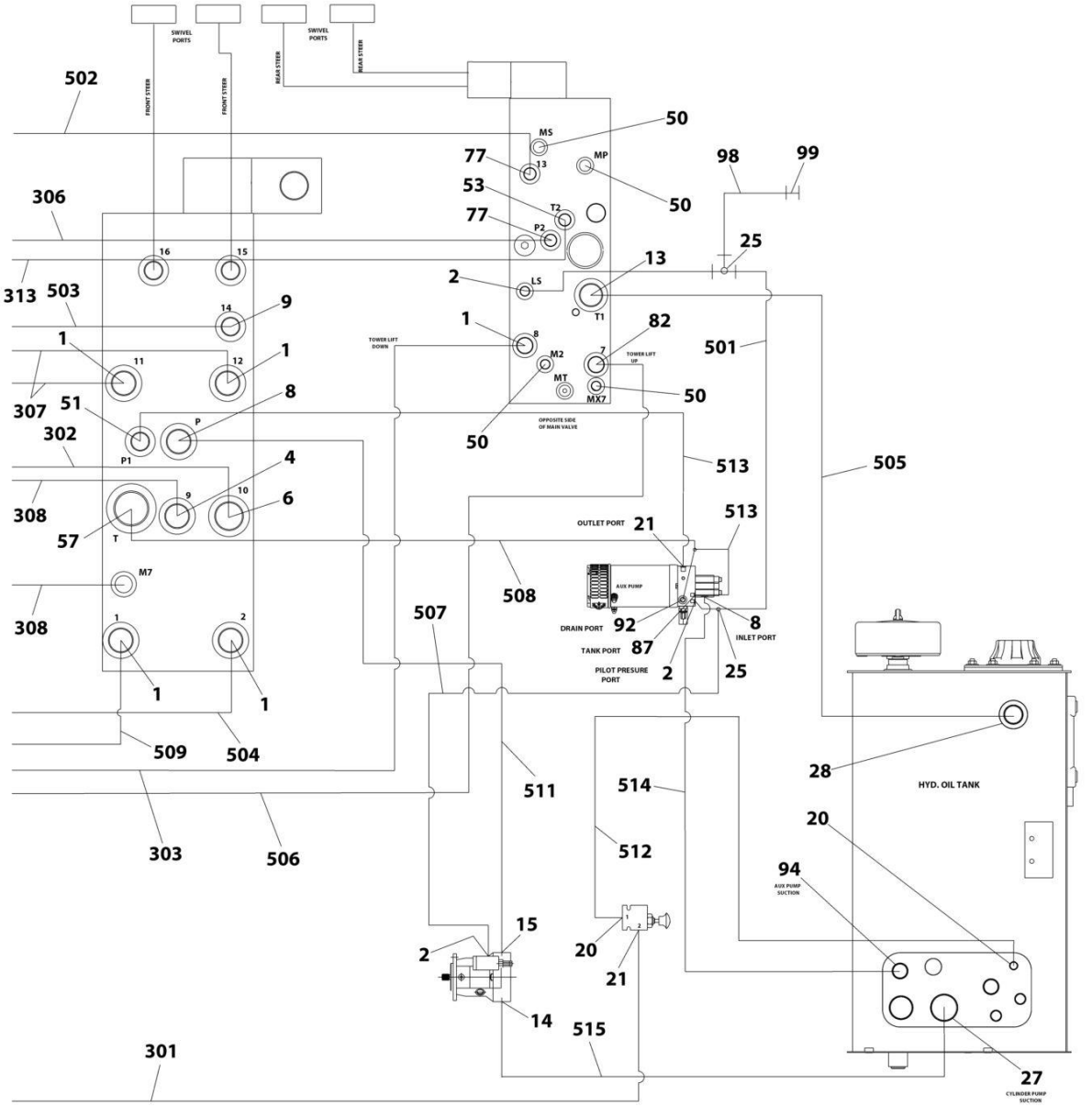

ART_1001254879_D_2OF2

FIGURE 7-7. HYDRAULIC DIAGRAM - STANDARD (SN 0300285430 to Present)

ITEM	PART NUMBER	QTY	DESCRIPTION	REV
	1001254879	Ref	STANDARD HYDRAULIC DIAGRAM	D
1	2220381	5	Fitting, Straight ORB/FL	
2	2220415	9	Fitting, Straight ORB/FL	
3	2753442	2	Hose	
4	2220373	5	Fitting, Straight ORB/FL	
5	2220500	3	Fitting, 45 ORB/FL	
6	2220947	2	Fitting, Straight ORB/FL	
7	2220600	1	Fitting, Straight JIC/ORB	
8	2220593	2	Fitting, Straight ORB/FL	
9	2220371	3	Fitting, Straight ORB/FL	
13	1001179329	1	Fitting, Straight JIC/ORB	
14	2220737	1	Split Flange Kit #24	
15	2220478	1	Split Flange Kit #16	
19	2220466	3	Fitting, 90 ORB/FL	
20	2220582	2	Fitting, Straight JIC/ORB	
21	2220473	4	Fitting, 90 ORB/FL	
25	2220605	2	Fitting, Tee FL/FL	
27	2220765	1	Fitting, Straight ORB/FL	
28	2220377	1	Fitting, Straight JIC/ORB	
30	2220596	6	Fitting, 90 ORB/FL	
34	2220852	2	Fitting, Straight ORB/FL	
37	2220490	1	Fitting, Tee FL/FL	
50	2221086	4	Fitting, Diagnostic Test Port, EM3A	
51	4640780	1	Fitting, Check Valve	
53	1001136881	1	Fitting, 45 ORB/FG	
55	2220472	2	Fitting, 90 ORB/FL (800AJ)	
57	2220577	1	Fitting, Straight ORB/FL	
58	2221034	1	Fitting, Tee FL/FL/ORB	
66	2752767	1	Hose	
68	2753190	1	Hose	
77	2220501	2	Fitting, 45 ORB/FL	
78	4567757	1	Tube	
79	4100062	4	Protection, Hose (Not Shown - Located at Tower Boom Power Track)	
81	2221036	1	Fitting, 90 ORB/FL	
82	2220950	1	Fitting, 45 ORB/FL	
87	2220603	5	Fitting, Straight ORB/FL	
92	2220899	1	Fitting, Tee ORB/FL/FL	
94	2220451	1	Fitting, Straight JIC/ORB	
96	2220468	1	Fitting, Straight JIC/ORB	
97	1001215289	1	Fitting, Tee JIC/ORB/JIC	
98	2752995	1	Hose	
99	91143177	1	Fitting - Diagnostic Test Port	
100	2220362	1	Fitting, Tee FL/FL/FL	
101	2220726	1	Adapter, 90 SJIC/ORB	
102	1001136358	1	Sleeve, Abrasion (Not Shown)	
103	4240032	2	Tie-Strap (Not Shown)	
200	1001256059	1	Upper Boom Hose Kit	
202	1001119602	1	Hose	
203	1001155673	1	Hose	

ITEM	PART NUMBER	QTY	DESCRIPTION	REV
204	1001159707	2	Hose	
205	1001254846	1	Hose	
206	1001254847	1	Hose	
207	1001259466	1	Hose	
208	1001259467	1	Hose	
209	1001259468	1	Hose	
210	1001259470	1	Hose	
300	1001183226	1	Lower Boom Hose Kit	
301	2752468	1	Hose	
302	2752766	1	Hose	
303	2752930	1	Hose	
304	2752978	1	Hose	
305	2753008	1	Hose	
306	2753123	1	Hose	
307	2753189	2	Hose	
308	2753191	1	Hose	
309	2753195	1	Hose	
310	2753196	1	Hose	
311	2753197	1	Hose	
312	2753199	1	Hose	
313	1001182162	1	Hose	
500	1001270089	1	Turntable Hose Kit	
501	2752434	1	Hose	
502	2752461	1	Hose	
503	2752484	1	Hose	
504	2752494	1	Hose	
505	2752723	1	Hose	
506	2752768	1	Hose	
507	2753010	2	Hose	
508	2753118	1	Hose	
509	2753192	1	Hose	
510	2753200	1	Hose	
511	2753231	1	Hose	
512	2753274	1	Hose	
513	1001109690	2	Hose	
514	1001149410	1	Hose	
515	1001179079	1	Hose	

SECTION 8 - ELECTRICAL

FIGURE 8-1. 800AJ HC3 ELECTRICAL LAYOUT

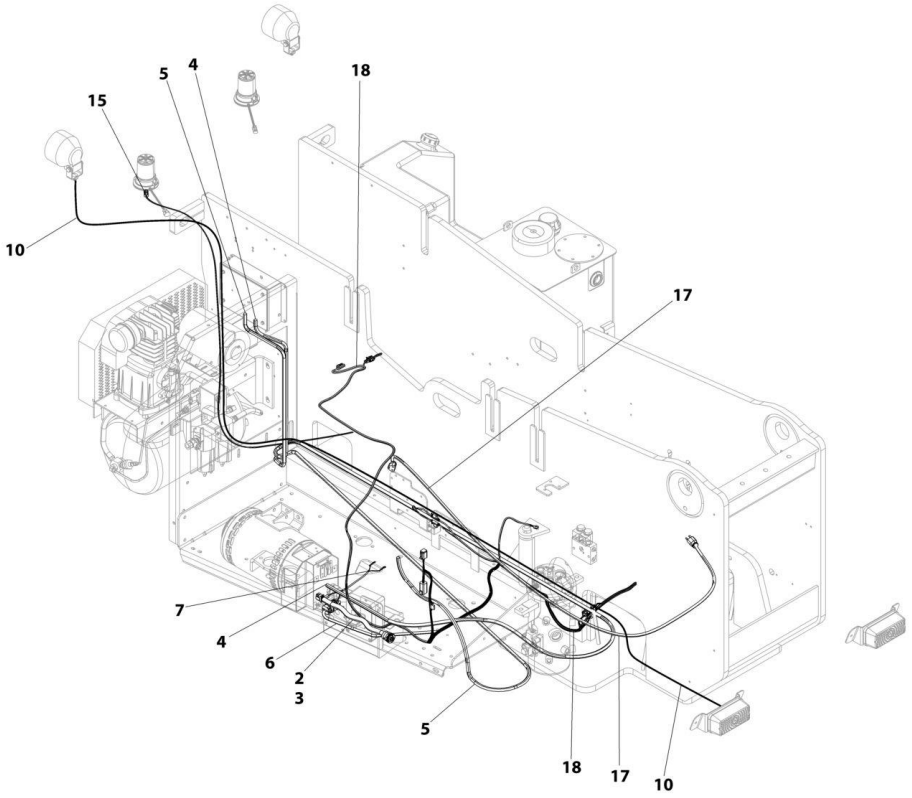

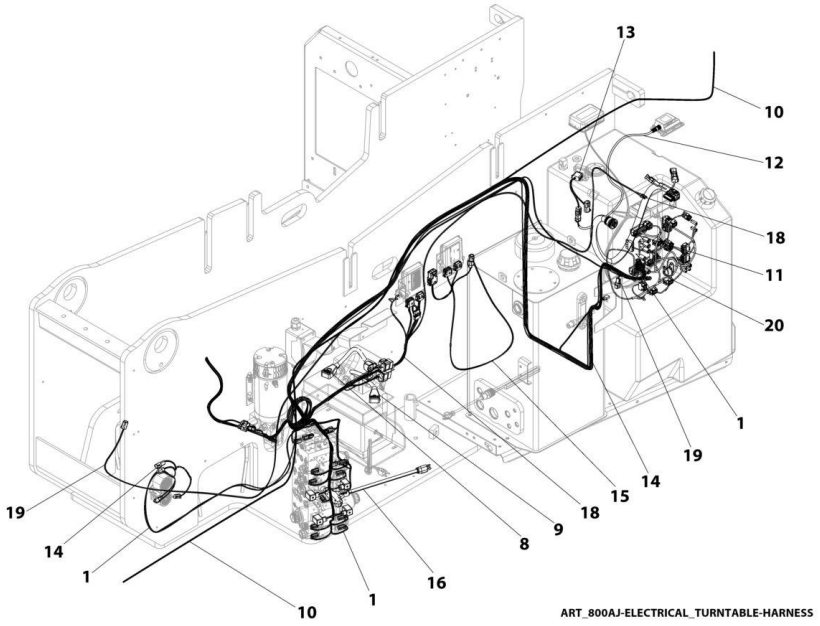

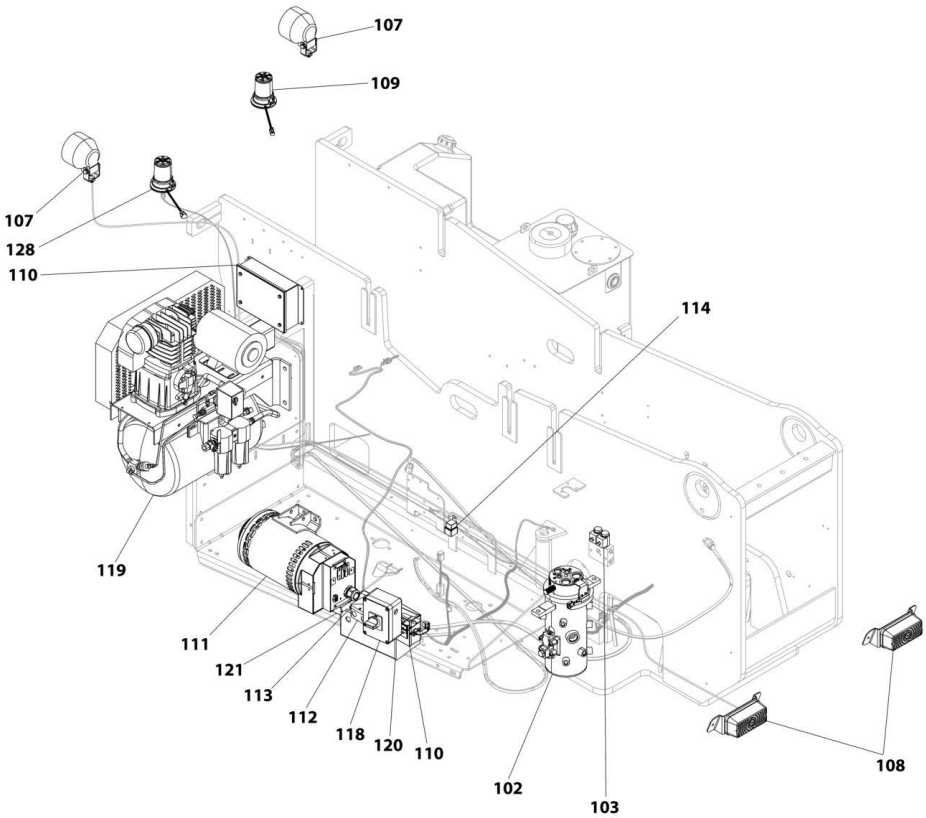
107
109
107
128
110
114
119
111
121
113
112
118
120
110
102
103
108

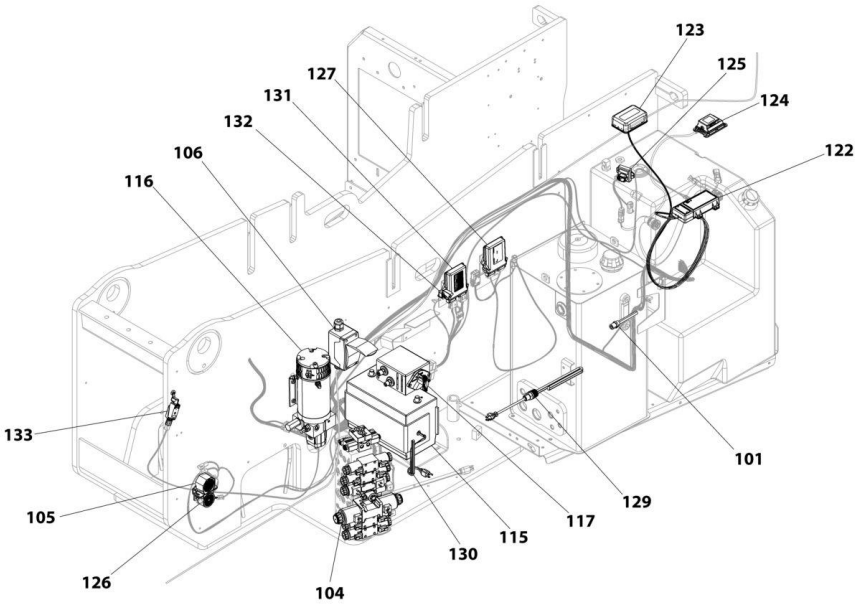
123
125
124
127
131
132
122
106
116
133
101
129
105
117
115
130
126
104
ART_800AJ-ELECTRICAL_TURNTABLE-COMPONENT

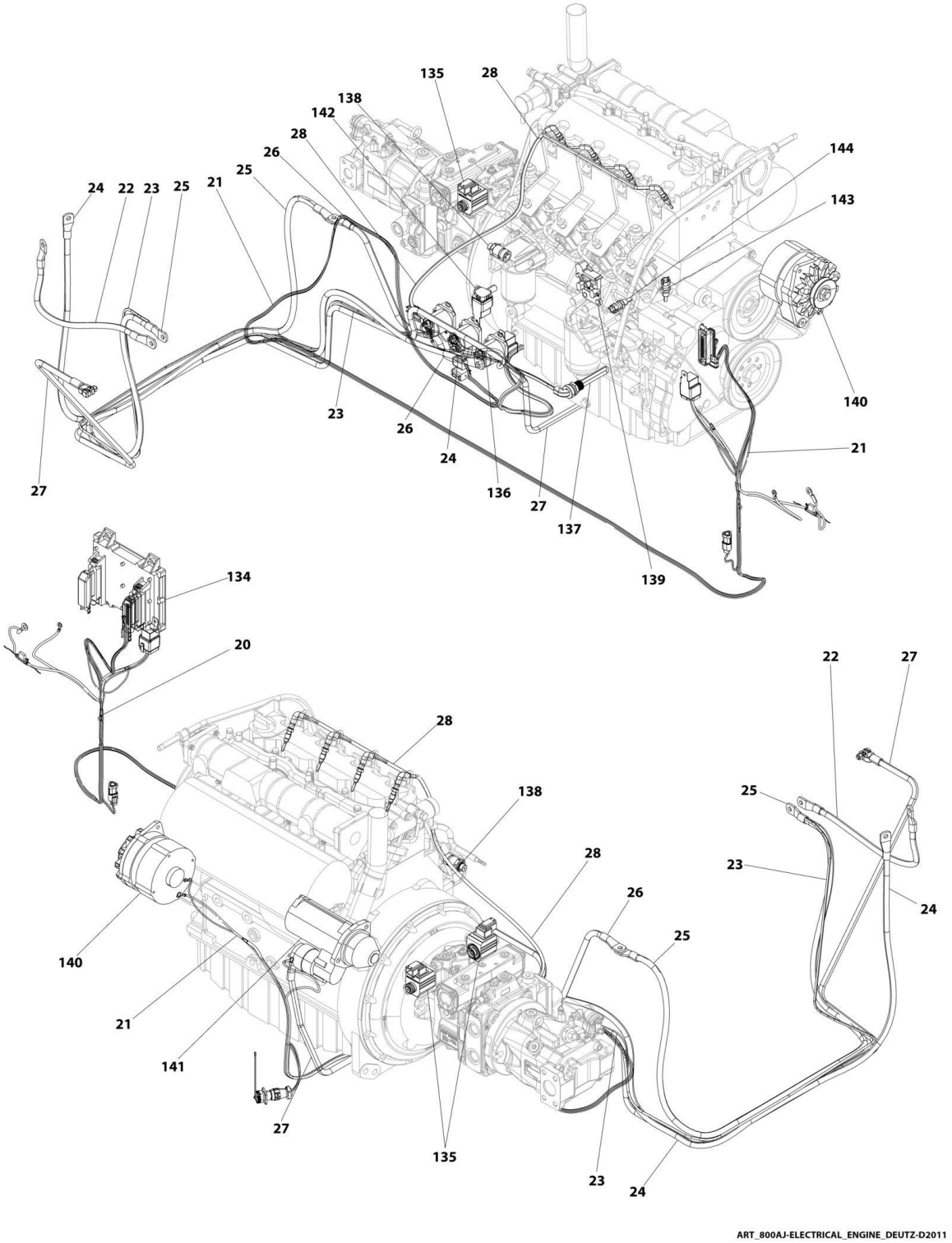
135
28
138
142
28
26
25
21
24
22
23
25
144
143
140
21
23
26
24
136
27
137
139
27
134
20
22
27
28
138
25
28
23
26
24
25
140
21
141
27
135
23
24
ART_800AJ-ELECTRICAL_ENGINE_DEUTZ-D2011

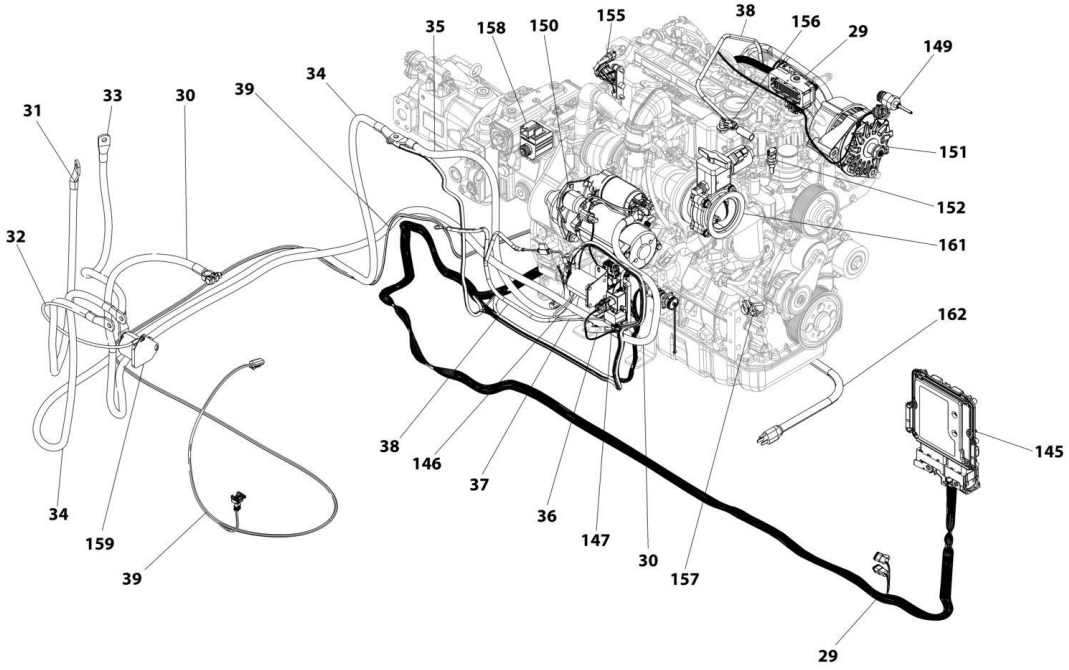

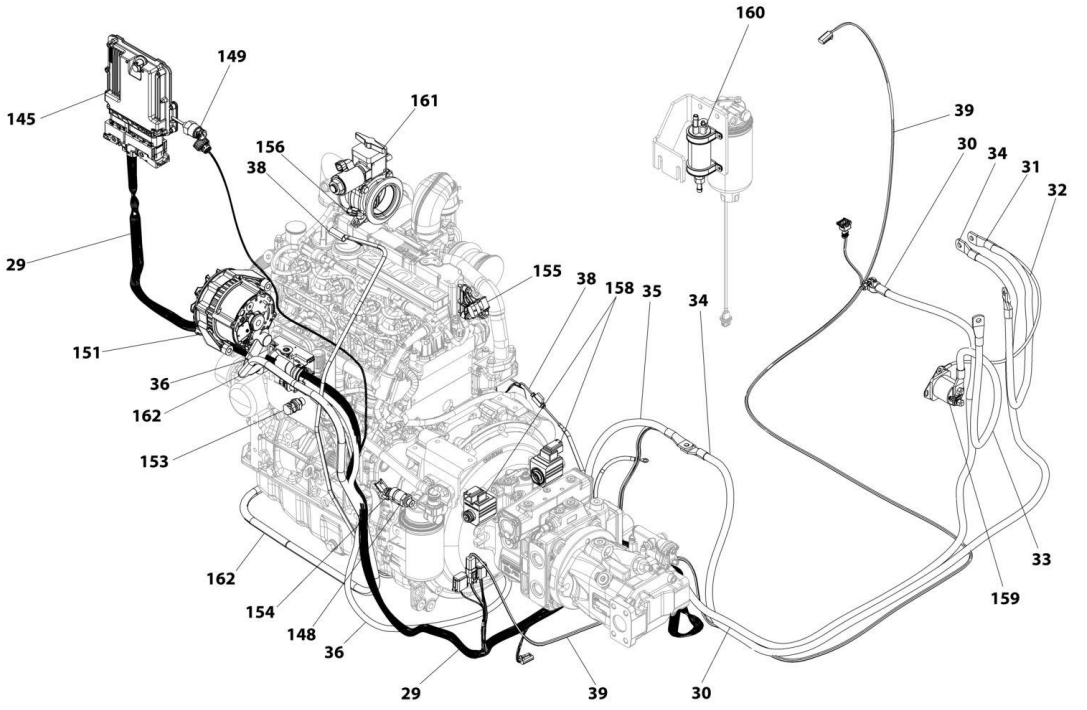

ART_800AJ-ELECTRICAL_ENGINE_DEUTZ-2.9L4

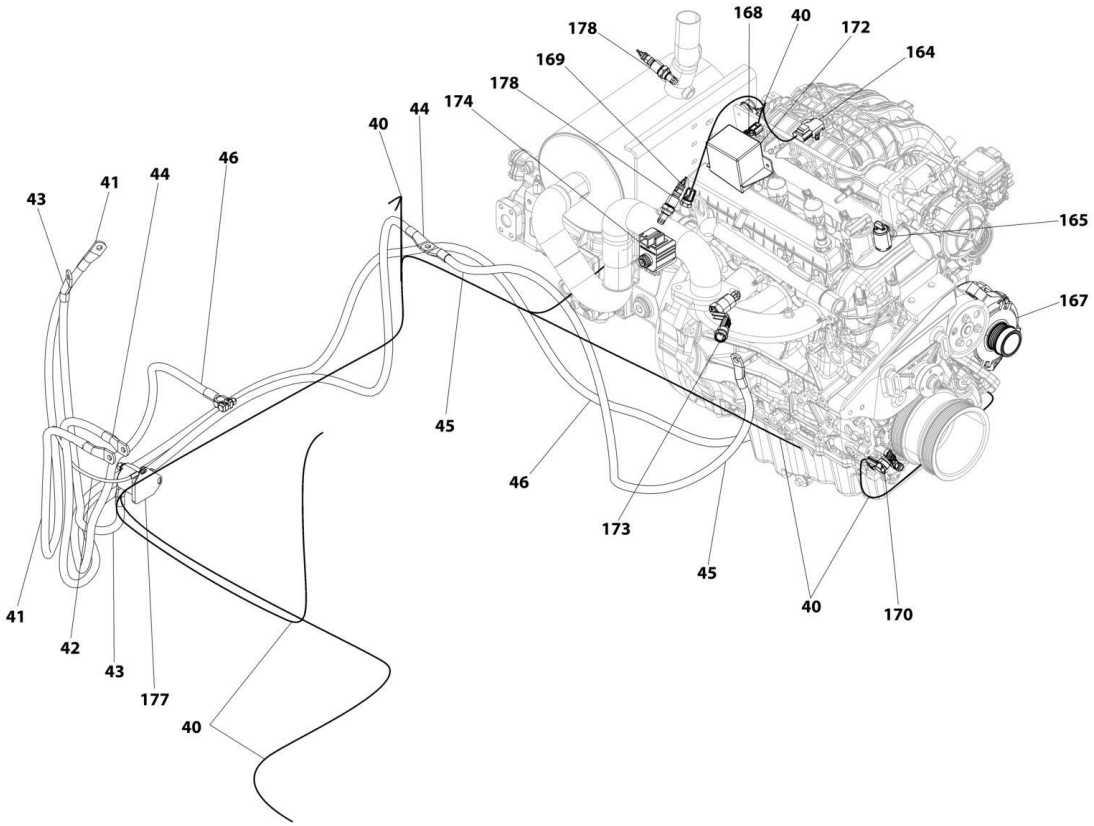
178
168
40
172
164
169
178
174
44
40
46
41
44
43
165
167
45
46
173
45
40
170
41
42
43
177
40

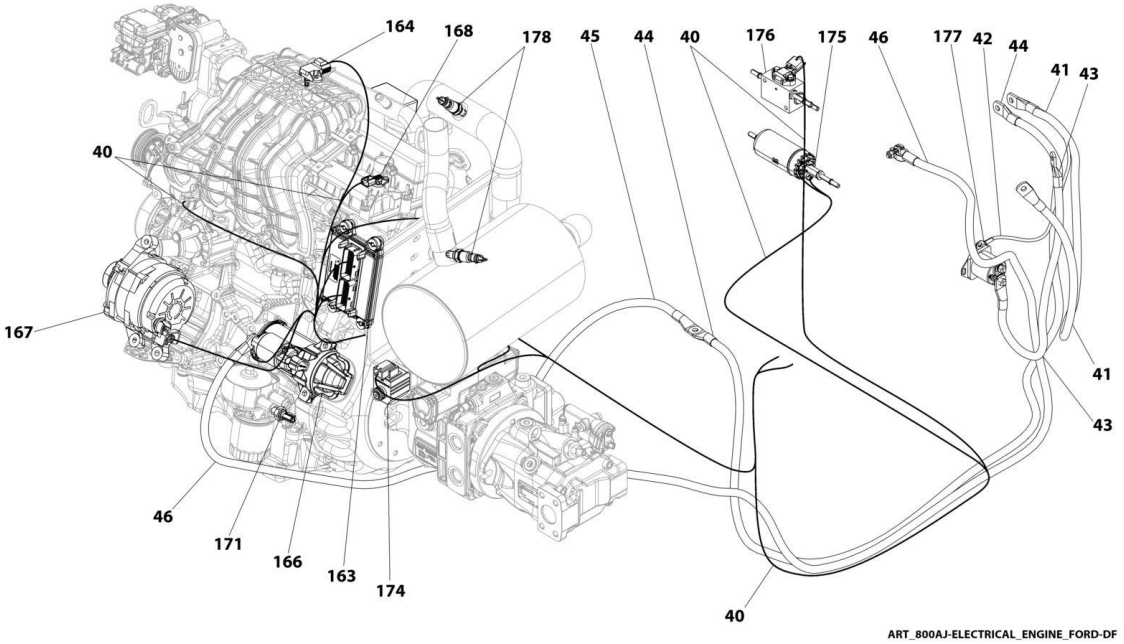
164
168
178
45
44
40
176
175
46
177
42
44
41
43
40
167
41
43
46
171
166
163
174
40
ART_800AJ-ELECTRICAL_ENGINE_FORD-DF

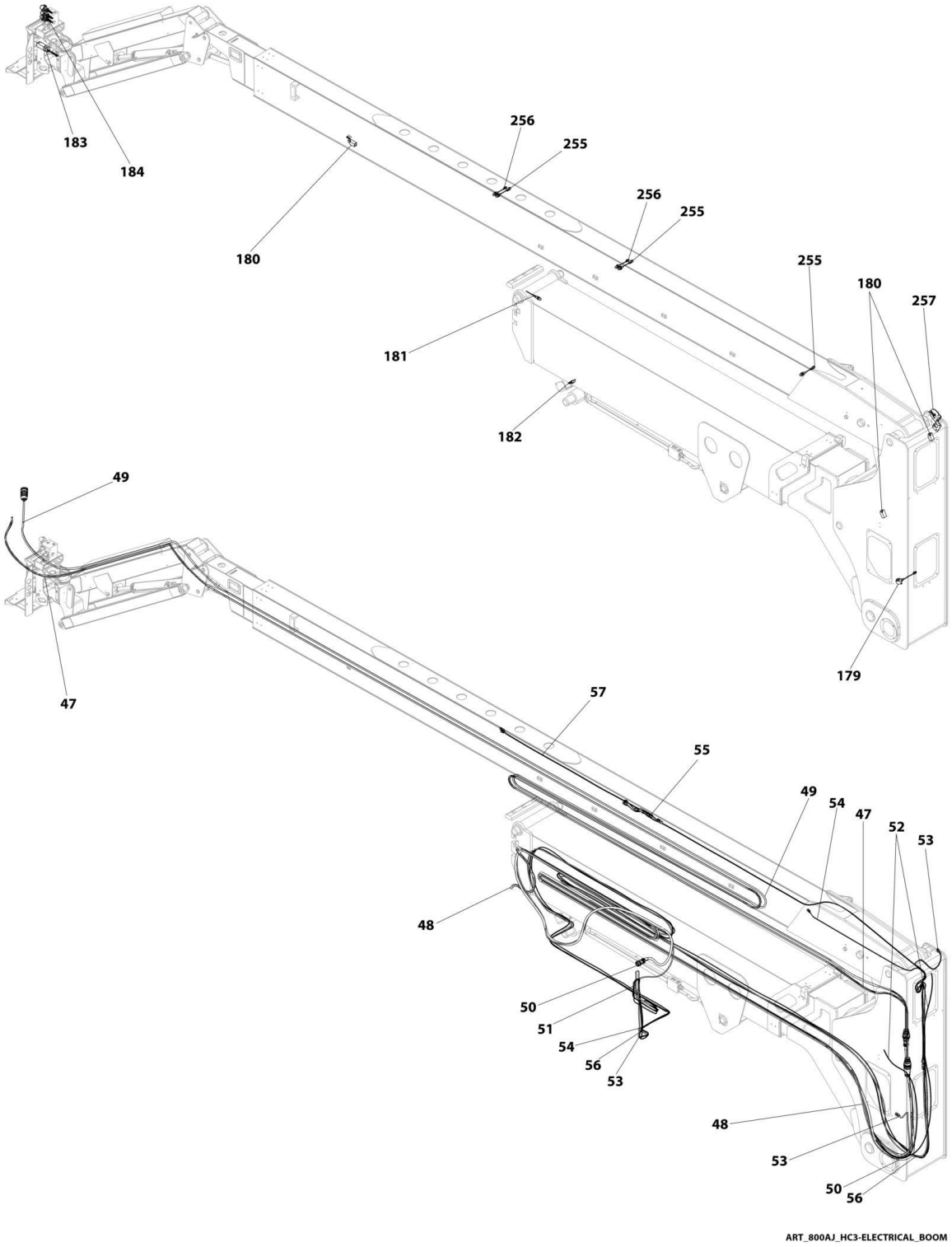
183
184
180
256
255
256
255
255
180
257
181
182
179
49
47
57
55
49
54
47
52
53
48
50
51
54
56
53
48
53
50
56
ART_800AJ_HC3-ELECTRICAL_BOOM

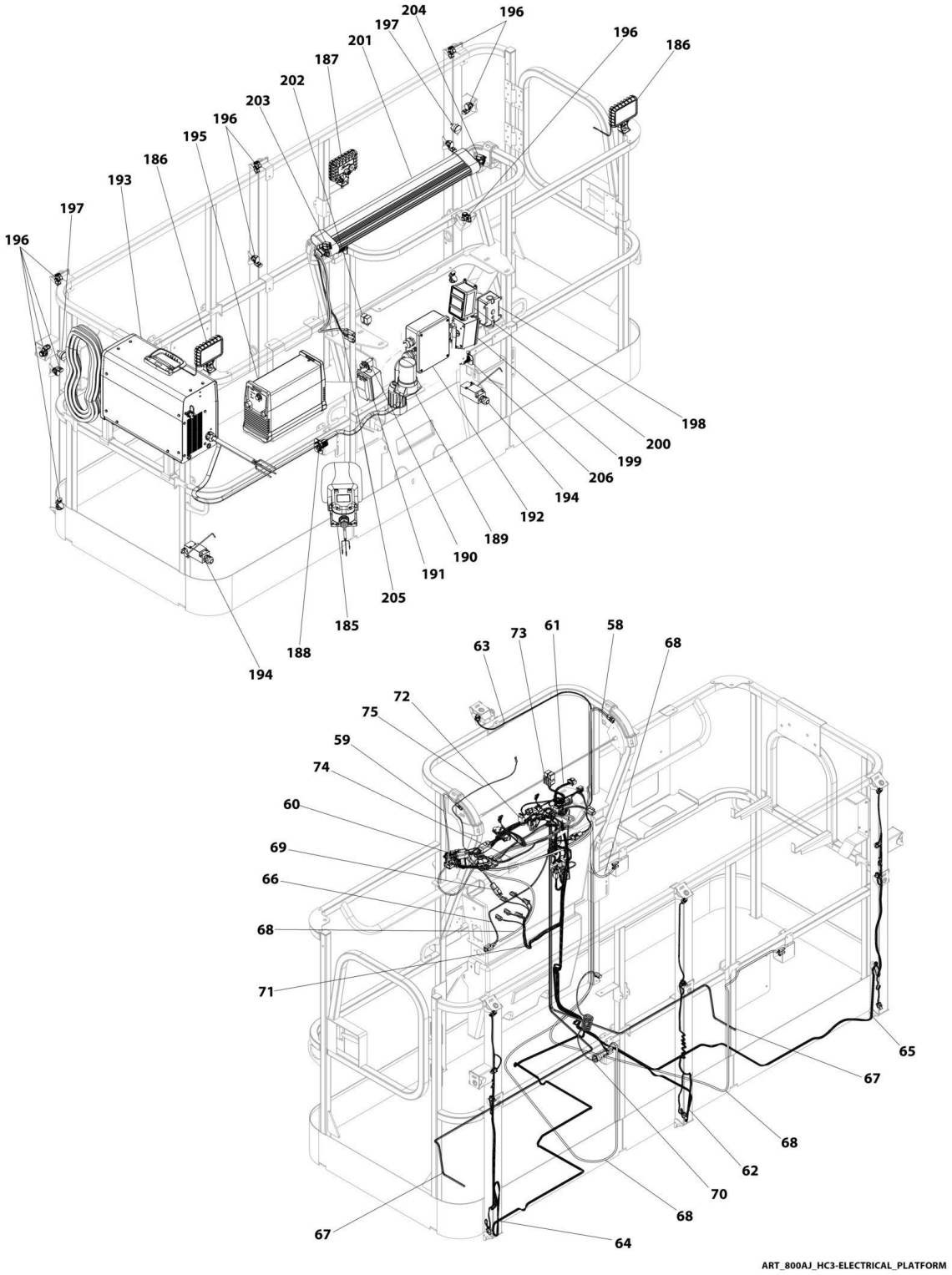
204
196
197
196
201
186
187
202
203
196
195
186
193
197
196
198
200
199
206
194
192
189
190
191
205
185
188
194
73
61
58
63
68
72
75
59
74
60
69
66
68
71
65
67
68
62
70
68
67
64
ART_800AJ_HC3-ELECTRICAL_PLATFORM

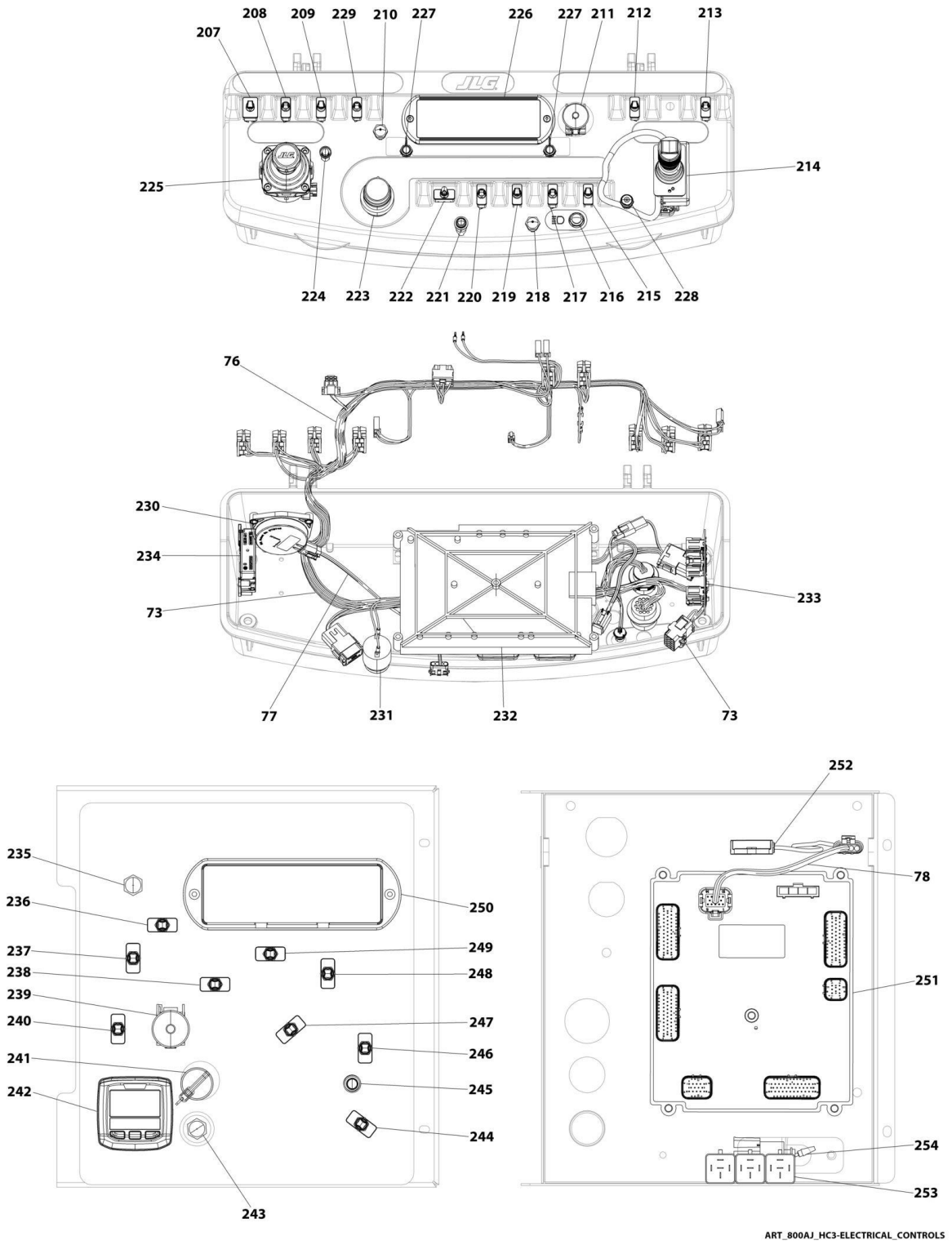
207
208
209
229
210
227
226
227
211
212
213
214
225
224
223
222
221
220
219
218
217
216
215
228
76
230
234
73
233
77
231
232
73
252
235
236
237
238
239
240
241
242
243
250
249
248
247
246
245
244
78
251
254
253
ART_800AJ_HC3-ELECTRICAL_CONTROLS

FIGURE 8-1. 800AJ HC3 ELECTRICAL LAYOUT

ITEM	PART NUMBER	QTY	DESCRIPTION	REV
		Ref	HARNESS LIST	
		Ref	Note: This figure is for part identification only.	
1		Ref	Harness, Main Valve	
2		Ref	Harness, 7500W Generator	
3		Ref	Harness, 4000W Generator	
4		Ref	Harness, Generator to Control Box	
5		Ref	Harness, Generator Control Box to Engine	
6		Ref	Harness, 2500W Generator	
7		Ref	Harness, Hourmeter	
8		Ref	Cable, Battery (+) to Disconnect	
9		Ref	Cable, Battery (-) to Disconnect	
10		Ref	Harness, Head and Tail Light	
11		Ref	Harness, Clearsky	
12		Ref	Harness, Telematics	
13		Ref	Harness, Xirgo Jumper	
14		Ref	Harness, White Noise Alarm	
15		Ref	Harness, Strobe Light Control	
16		Ref	3-Way Plug	
17		Ref	Cable, Extension	
18		Ref	Harness, ASOV	
19		Ref	Harness, Tower Stow	
20		Ref	Harness, Ground Control	
21		Ref	Harness, Engine	
22		Ref	Cable, Battery (-) to Aux Pump	
23		Ref	Cable, Battery (-) to Relay	
24		Ref	Cable, Aux Pump to Relay	
25		Ref	Cable, Battery (-) to Ground	
26		Ref	Cable, Engine Ground	
27		Ref	Cable, Battery (+) to Starter	
28		Ref	Harness, Glow Plug	
29		Ref	Harness, Engine	
30		Ref	Cable, Battery (+) to Starter	
31		Ref	Cable, Battery (-) to Aux Pump	
32		Ref	Cable, Battery (-) to Relay	
33		Ref	Cable, Aux Pump to Relay	
34		Ref	Cable, Battery (-) to Ground	
35		Ref	Cable, Engine Ground	
36		Ref	Harness, Alternator Power	
37		Ref	Harness, Glow Plug Fuse	
38		Ref	Heater, Breather	
39		Ref	Harness, Fuel Pump	
40		Ref	Harness, Engine	
41		Ref	Cable, Battery (-) to Aux Pump	
42		Ref	Cable, Battery (-) to Relay	
43		Ref	Cable, Aux Pump to Relay	
44		Ref	Cable, Battery (-) to Ground	
45		Ref	Cable, Engine Ground	
46		Ref	Cable, Battery (+) to Starter	
47		Ref	Cable, AC Ground to Platform (Upper)	
48		Ref	Cable, AC Ground to Platform (Lower)	

ITEM	PART NUMBER	QTY	DESCRIPTION	REV
49		Ref	Cable, Boom (Upper)	
50		Ref	Cable, Boom (Lower)	
51		Ref	Harness, Tilt Sensor	
52		Ref	Harness, Proximity Sensor	
53		Ref	Harness, Main Boom Angle Sensor	
54		Ref	Harness, Transport Proximity Sensor	
55		Ref	Harness, Capacity (Upper)	
56		Ref	Harness, Capacity (Lower)	
57		Ref	Harness, Capacity Proximity (Upper)	
58		Ref	Harness, SkyEye Receiver	
59		Ref	Harness, SkyEye Emitter	
60		Ref	Harness, SkyEye Intermediate	
61		Ref	Harness, SkySense Main	
62		Ref	Harness, SkySense Mid Tube	
63		Ref	Harness SkySense Overhead Sensor	
64		Ref	Harness, SkySense Left Tube	
65		Ref	Harness, SkySense Right Tube	
66		Ref	Harness, USB	
67		Ref	Cable, Soft Touch	
68		Ref	Harness, Portable Work Light	
69		Ref	Harness, Portable Light Power	
70		Ref	Harness, Portable Work Light Extension	
71		Ref	Harness, Platform Valve	
72		Ref	Harness, Platform Work Light	
73		Ref	Harness, SkyLine	
74		Ref	Harness, SkyGuard	
75		Ref	Harness, Platform Strobe Light	
76		Ref	Harness, Platform Console	
77		Ref	Harness, Tilt Sensor	
78		Ref	Harness, Tilt Sensor	
		Ref	COMPONENT LIST	
101		Ref	Sensor, Fuel Level	
102		Ref	Rotary Coupling	
103		Ref	Solenoids, Axle Valve	
104		Ref	Solenoids, Main Control Valve	
105		Ref	Alarm	
106		Ref	AC Breaker Box	
107		Ref	Headlight	
108		Ref	Taillight	
109		Ref	Light, Strobe (Amber)	
110		Ref	Box, Generator Control	
111		Ref	Generator	
112		Ref	Generator Junction Box	
113		Ref	Light, Generator	
114		Ref	Relay	
115		Ref	Battery	
116		Ref	Auxiliary Pump/Motor	
117		Ref	Switch, Battery Disconnect	
118		Ref	Box, Air Compressor Control	
119		Ref	Air Compressor	
120		Ref	Transformer, Cold Weather	

ITEM	PART NUMBER	QTY	DESCRIPTION	REV
121		Ref	Generator Hourmeter	
122		Ref	Module, ClearSky Telematics CANBUS	
123		Ref	Antenna, ClearSky Telematics	
124		Ref	Module, ClearSky Telematics 3-Wire	
125		Ref	Voltage Regulator, ClearSky Telematics	
126		Ref	Alarm, White Noise	
127		Ref	Module, Strobe Control	
128		Ref	Light, Strobe	
129		Ref	Heater, Immersion	
130		Ref	Heater, Battery	
131		Ref	Module, ASOV Control	
132		Ref	Switch, ASOV	
133		Ref	Sensor, Tower Stow	
134		Ref	Module, Engine Control	
135		Ref	Solenoids, Hydrodstatic Pump	
136		Ref	Relays	
137		Ref	Heater, Engine Block	
138		Ref	Sensor, Temperature	
139		Ref	Sensor	
140		Ref	Alternator	
141		Ref	Starter	
142		Ref	Sensor, Speed	
143		Ref	Sensor, Engine Coolant Temperature	
144		Ref	Sensor, Pressure	
145		Ref	Module, Engine Control	
146		Ref	Relay	
147		Ref	Relay	
148		Ref	Sensor, Pressure	
149		Ref	Sensor, Coolant Level	
150		Ref	Starter	
151		Ref	Alternator	
152		Ref	Sensor, Engine Coolant Temperature	
153		Ref	Sensor, Pressure	
154		Ref	Sensor, Speed	
155		Ref	Sensor, Oil Pressure	
156		Ref	Sensor, Temperature	
157		Ref	Sensor, Speed	
158		Ref	Solenoids, Hydrodstatic Pump	
159		Ref	Relay	
160		Ref	Fuel Pump	
161		Ref	Air Shut Off Valve (ASOV)	
162		Ref	Heater, Engine Block	
163		Ref	Module, Engine Control	
164		Ref	Sensor, TMAP	
165		Ref	Solenoid, Timing	
166		Ref	Starter	
167		Ref	Alternator	
168		Ref	Sensor, Speed	
169		Ref	Engine Coolant Temperature Sensor	
170		Ref	Sensor, Speed	
171		Ref	Sensor, Oil Pressure	

ITEM	PART NUMBER	QTY	DESCRIPTION	REV
172		Ref	Fuse Box	
173		Ref	Heater, Engine Block	
174		Ref	Solenoids, Hydrodstatic Pump	
175		Ref	Fuel Pump	
176		Ref	Fuel Block	
177		Ref	Relay	
178		Ref	Sensor, O2	
179		Ref	Sensor, Tilt	
180		Ref	Sensor, Transport Position	
181		Ref	Sensor, Proximity	
182		Ref	Sensor, Proximity	
183		Ref	Cell, Load Sensing	
184		Ref	Solenoids, Platform Valve	
185		Ref	Footswitch	
186		Ref	Platform Work Light	
187		Ref	Portable Work Light	
188		Ref	AC Receptacle	
189		Ref	Light, Platform Strobe	
190		Ref	Switch, Generator	
191		Ref	AC Receptacle	
192		Ref	Junction Box	
193		Ref	Welding Machine	
194		Ref	Switch, Soft Touch Limit	
195		Ref	Plasma Cutter	
196		Ref	Sensor, SkySense	
197		Ref	Alarm	
198		Ref	AC Receptacle	
199		Ref	AC Receptacle	
200		Ref	AC Receptacle/Breaker Box	
201		Ref	Switch, SkyGuard	
202		Ref	Relay	
203		Ref	Sensor, SkyEye Receiver	
204		Ref	Sensor, SkyEye Emitter	
205		Ref	Sensor, SkyLine Proximity	
206		Ref	USB Receptacle	
207		Ref	Switch, Drive Speed/ Torque Select	
208		Ref	Switch, Steer Select	
209		Ref	Switch, Platform Leveling Override	
210		Ref	Switch, Horn	
211		Ref	Switch, Emergency Stop	
212		Ref	Switch, Start/Auxilliary Power	
213		Ref	Switch, Drive Orientation Override	
214		Ref	Controller, Drive/Steer	
215		Ref	Switch, Boom Telescope	
216		Ref	Switch, Lights	
217		Ref	Switch, Jib Up/Down	
218		Ref	Switch, Soft Touch/SkyGuard/SkySense Override	
219		Ref	Switch, Tower Telescope	
220		Ref	Switch, Tower Lift	
221		Ref	Light, Soft Touch/SkyGuard/SkySense Indicator	
222		Ref	Switch, Platform Rotate	

ITEM	PART NUMBER	QTY	DESCRIPTION	REV
223		Ref	Switch, Function Speed Control	
224		Ref	Light, Boom Stow Indicator	
225		Ref	Controller, Main Lift/Swing	
226		Ref	Display, Platform	
227		Ref	Light, SkySense Indicator	
228		Ref	Switch, SkySense	
229		Ref	Switch, Fuel Select	
230		Ref	Sensor, Tilt	
231		Ref	Alarm	
232		Ref	Module, Platform	
233		Ref	Module, SkySense Control	
234		Ref	Module, SkySense Sensor	
235		Ref	Switch, Diesel Particulate Filter (DPF)	
236		Ref	Switch, Platform Rotate	
237		Ref	Switch, Platform Leveling Override	
238		Ref	Switch, Jib Up/Down	
239		Ref	Switch, Emergency Stop	
240		Ref	Switch, Engine Start/ Auxiliary Power	
241		Ref	Switch, Key	
242		Ref	Display, Ground	
243		Ref	Switch, Machine Safety System Override (MSSO)	
244		Ref	Switch, Turntable Swing	
245		Ref	Light, Boom Stow/ASOV Indicator	
246		Ref	Switch, Tower Lift	
247		Ref	Switch, Tower Telescope	
248		Ref	Switch, Boom Lift	
249		Ref	Switch, Boom Telescope	
250		Ref	Indicator Panel	
251		Ref	Module, Ground Control	
252		Ref	Sensor, Tilt	
253		Ref	Relay	
254		Ref	Switch, Cribbing	
255		Ref	Sensor, Proximity	
256		Ref	Sensor, Proximity	
257		Ref	Sensor, Boom Angle	

FIGURE 8-2. AC BOX AT PLATFORM INSTALLATION - 110V GFI RECEPTACLE (ALL SPECS EXCEPT AUSTRALIAN, CE & UK CA SPECS)

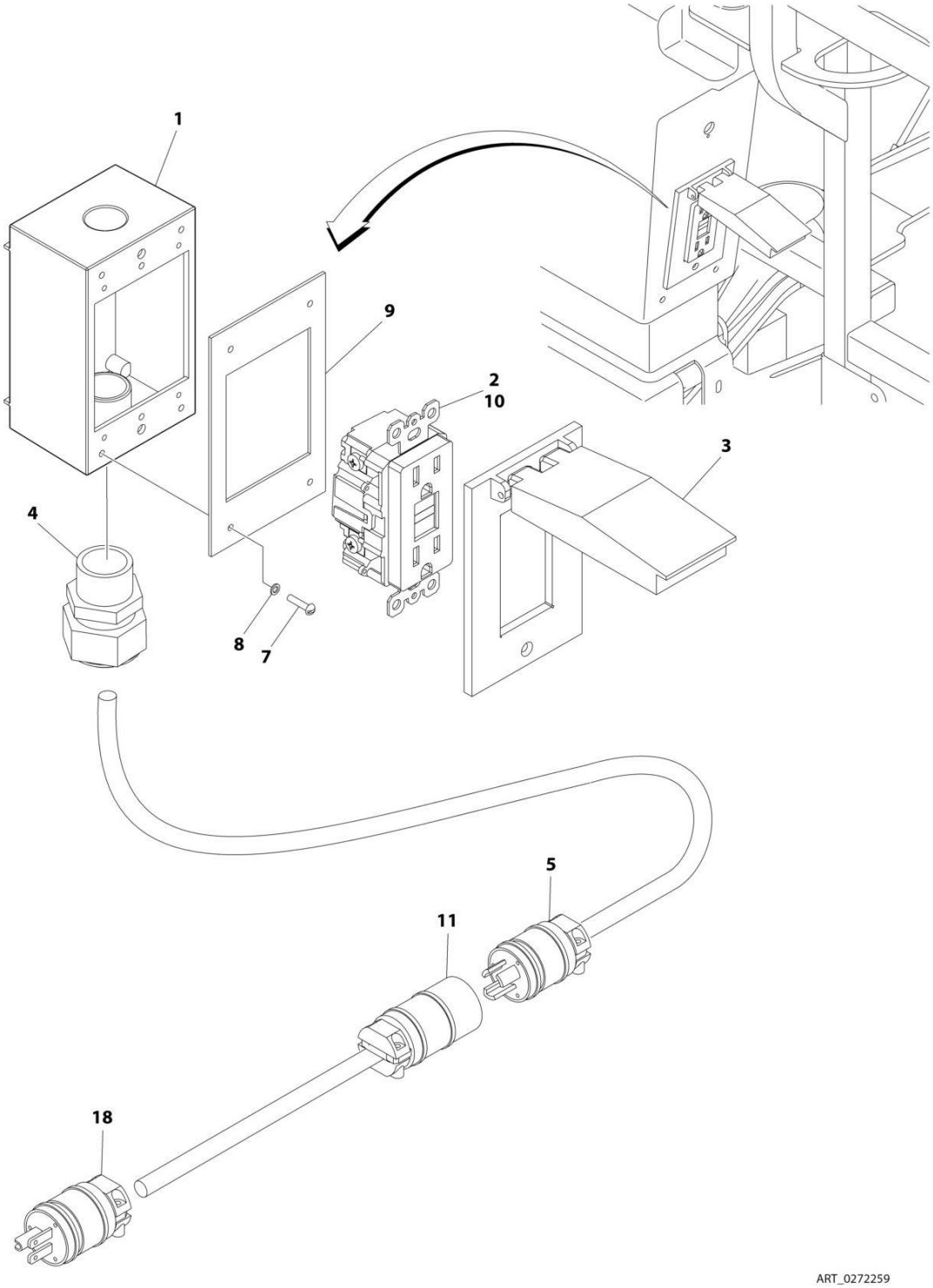

FIGURE 8-2. AC BOX AT PLATFORM INSTALLATION - 110V GFI RECEPTACLE (ALL SPECS EXCEPT AUSTRALIAN, CE & UK CA SPECS)

ITEM	PART NUMBER	QTY	DESCRIPTION	REV
	0272259	Ref	AC BOX AT PLATFORM INSTALLATION - 110V GFI RECEPTACLE	C
1	0860038	1	Box, Switch	
2	4460346	1	Receptacle	
3	1001110873	1	Shield, Cover	
4	4460051	1	Connector, Strain Relief	
5	1001213584	1	Plug, Male	
7	3910610	4	Screw #6 x 5/8	
8	4760600	4	Washer #6	
9	3960422	1	Gasket	
10	4460315	3	Terminal, Spade	
11	1001213585	1	Receptacle, Female	
18	4460205	1	Plug, Male	

FIGURE 8-3. AC BOX AT PLATFORM INSTALLATION - 220V (ANSI, CSA & JAPANESE SPECS)

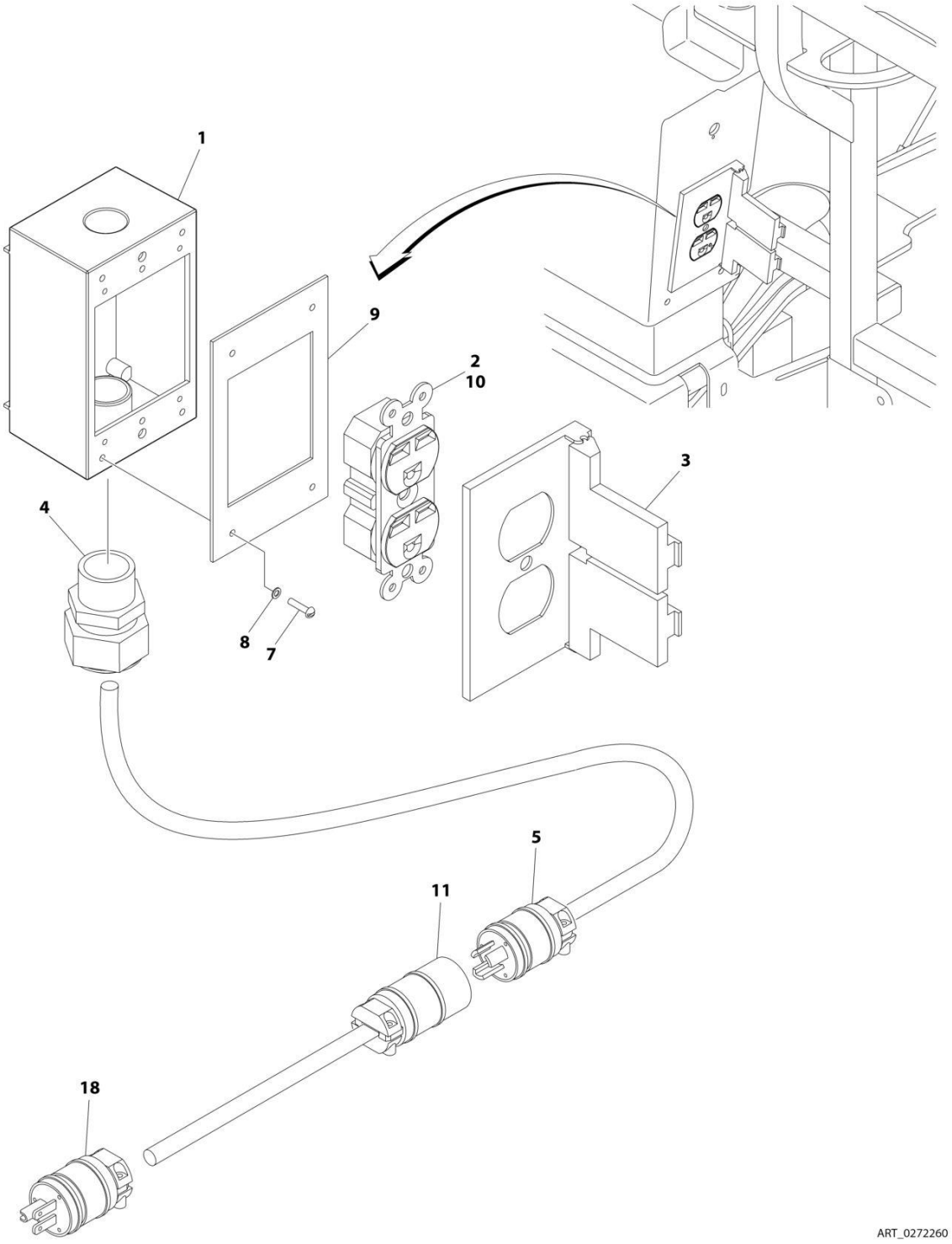

FIGURE 8-3. AC BOX AT PLATFORM INSTALLATION - 220V (ANSI, CSA & JAPANESE SPECS)

ITEM	PART NUMBER	QTY	DESCRIPTION	REV
	0272260	Ref	AC BOX AT PLATFORM INSTALLATION - 220V	C
1	0860038	1	Box, Switch	
2	4460125	1	Receptacle	
3	4060092	1	Shield	
4	4460051	1	Connector, Strain Relief	
5	1001213584	2	Plug, Male	
7	3910610	4	Screw #6 x 5/8	
8	4760600	4	Washer #6	
9	3960422	1	Gasket	
10	4460315	1	Terminal, Spade	
11	1001213585	1	Receptacle, Female	
18	4460233	1	Plug, Male	

FIGURE 8-4. AC BOX AT PLATFORM MID-BOOM PLUG INSTALLATION (WITH 4000W/60HZ GENERATOR) (ANSI, ANSI EXPORT, CHINA, CSA & JAPANESE SPECS)

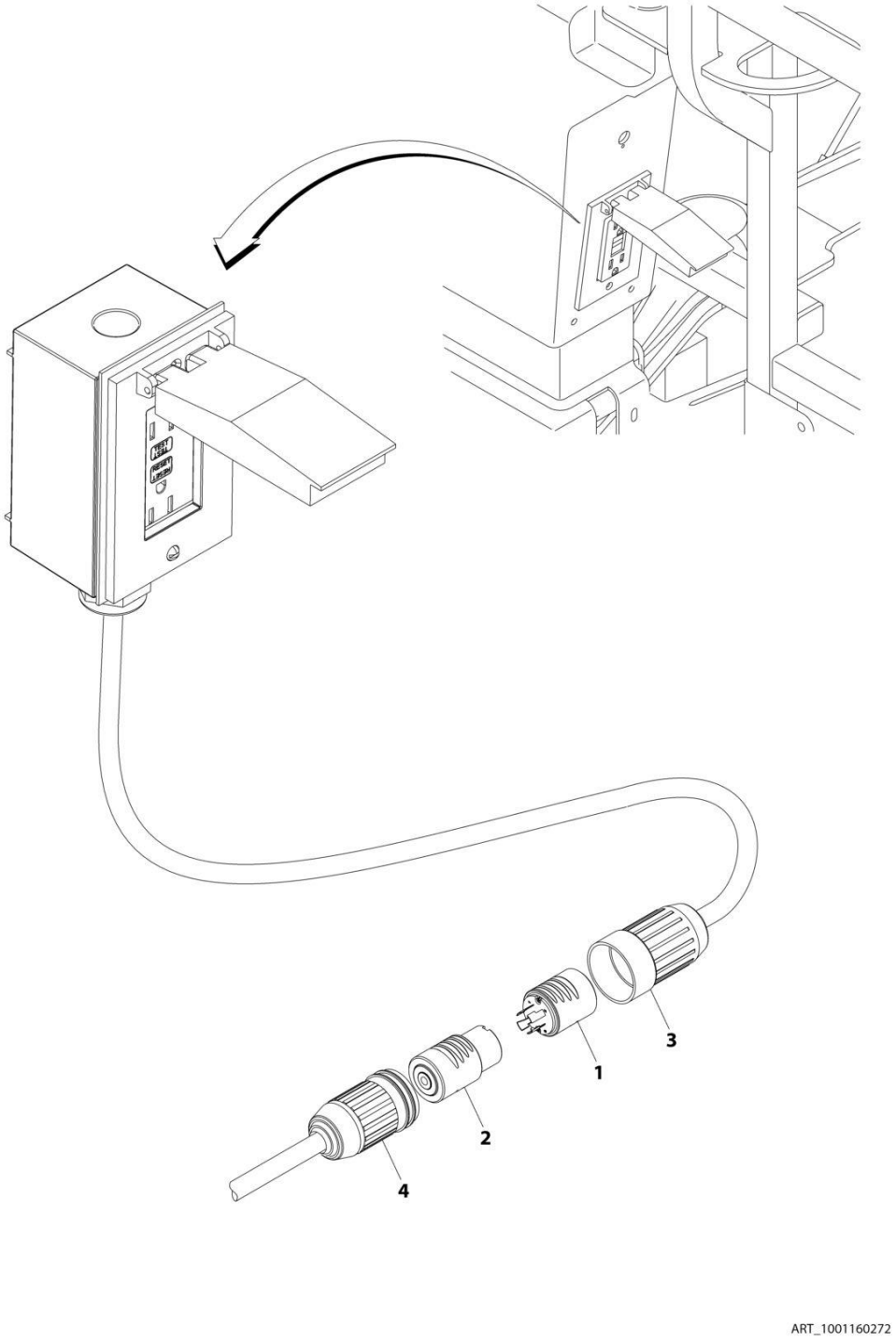

FIGURE 8-4. AC BOX AT PLATFORM MID-BOOM PLUG INSTALLATION (WITH 4000W/60HZ GENERATOR) (ANSI, ANSI EXPORT, CHINA, CSA & JAPANESE SPECS)

ITEM	PART NUMBER	QTY	DESCRIPTION	REV
	1001160272	Ref	AC CABLE CONNECTOR INSTALLATION – 4000W GENERATOR	A
1	4460962	1	Plug, Male	
2	4460963	1	Connector	
3	1671092	1	Cover	
4	1671093	1	Plug	

FIGURE 8-5. AC BOX AT PLATFORM MID-BOOM PLUG INSTALLATION (WITHOUT 7500W SKYPOWER GENERATOR) (ALL SPECS EXCEPT ANSI & CSA SPECS)

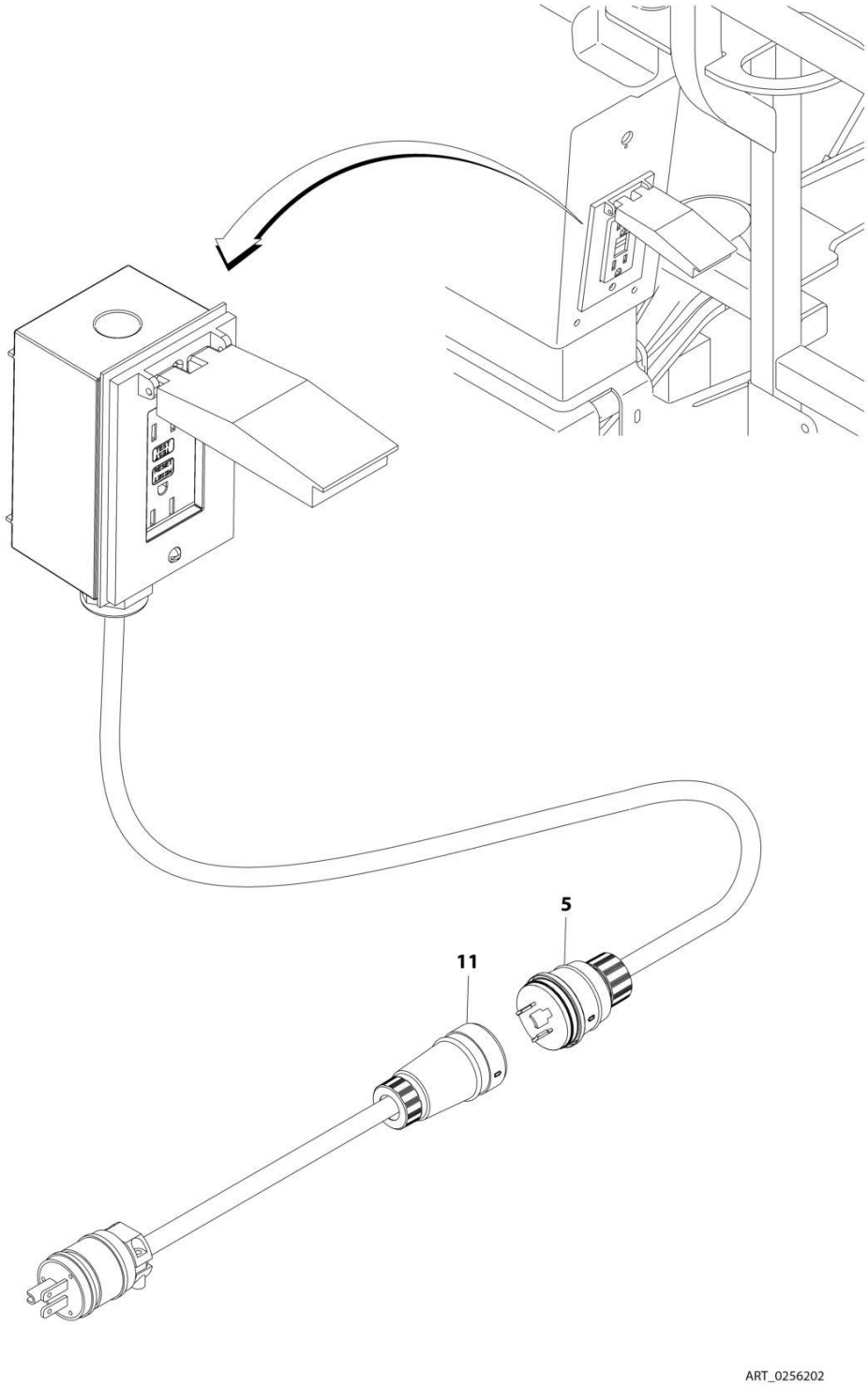

FIGURE 8-5. AC BOX AT PLATFORM MID-BOOM PLUG INSTALLATION (WITHOUT 7500W SKYPOWER GENERATOR) (ALL SPECS EXCEPT ANSI & CSA SPECS)

ITEM	PART NUMBER	QTY	DESCRIPTION	REV
	0256202	Ref	AC BOX AT PLATFORM MID-BOOM PLUG INSTALLATION	D
5	1001213584	1	Plug	
11	1001213585	1	Receptacle	

FIGURE 8-6. AC BOX AT PLATFORM MID-BOOM PLUG INSTALLATION (WITH 7500W SKYPOWER GENERATOR)

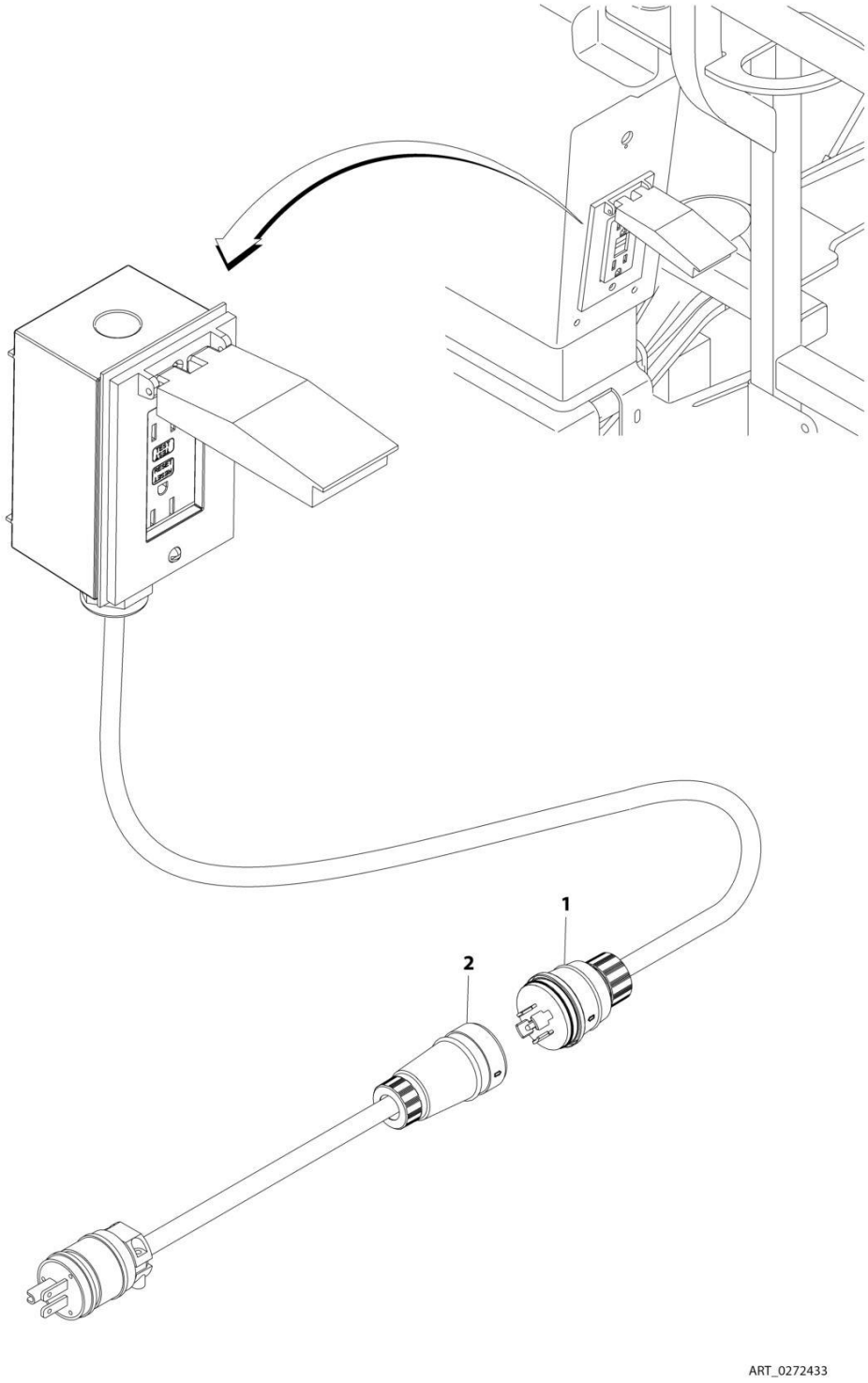

FIGURE 8-6. AC BOX AT PLATFORM MID-BOOM PLUG INSTALLATION (WITH 7500W SKYPOWER GENERATOR)

ITEM	PART NUMBER	QTY	DESCRIPTION	REV
	0272433	Ref	AC CABLE INSTALLATION - 110V/220V	D
1	1001218622	1	Plug, Male	
2	1001218623	1	Plug, Female	

FIGURE 8-7. AC BOX AT PLATFORM INSTALLATION - 110V IEC YELLOW (CE & UK CA SPECS) (MACHINES WITH 2500W GENERATOR OR NO GENERATOR OPTION)

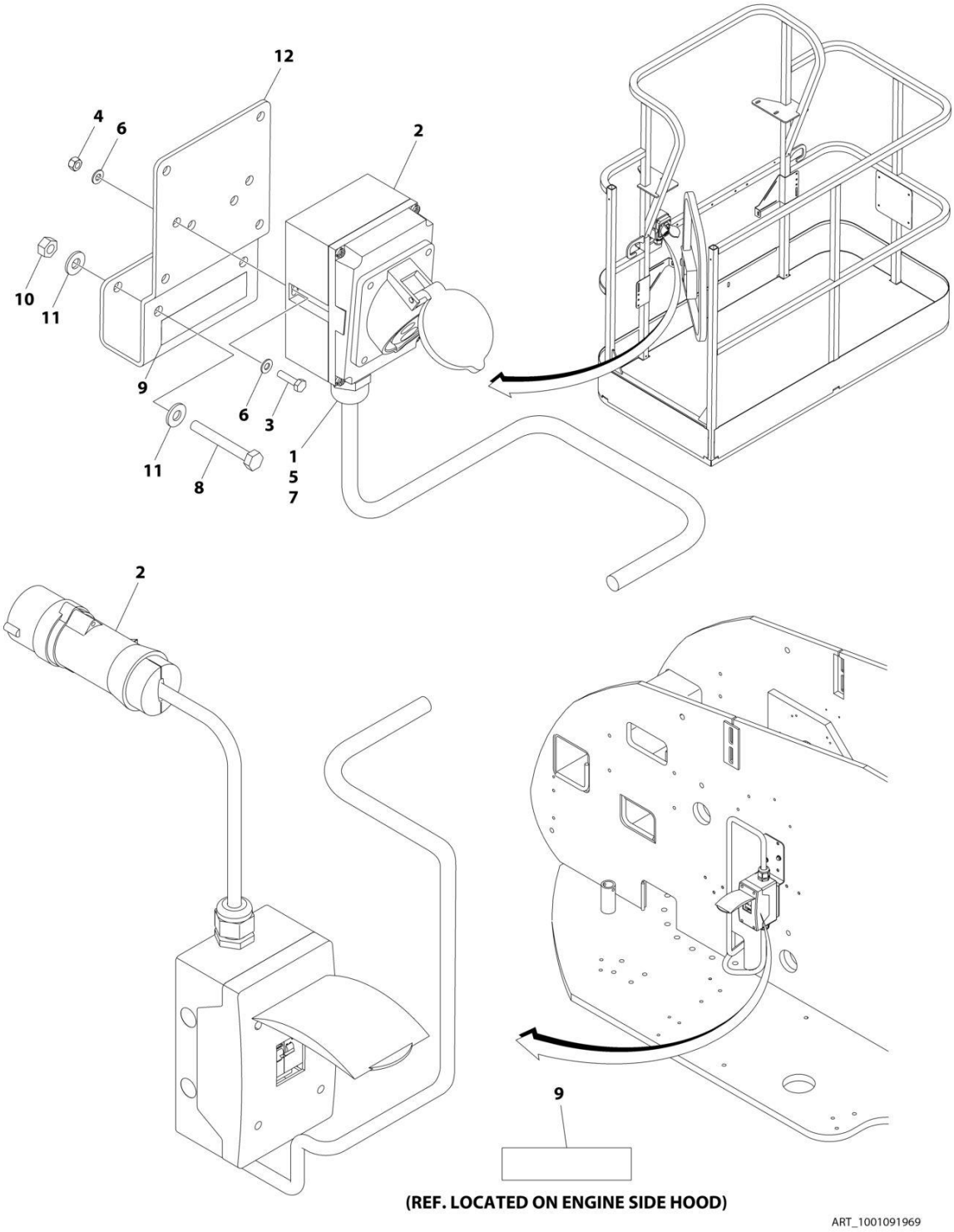

FIGURE 8-7. AC BOX AT PLATFORM INSTALLATION - 110V IEC YELLOW (CE & UK CA SPECS) (MACHINES WITH 2500W GENERATOR OR NO GENERATOR OPTION)

ITEM	PART NUMBER	QTY	DESCRIPTION	REV
	1001091969	Ref	AC BOX AT PLATFORM INSTALLATION - 110V IEC YELLOW	D
1	0100020	AR	Sealant, Pipe	
2	0275216	1	Receptacle Box Kit (See Separate Breakdown in this Section)	
3	0700408	2	Bolt M4 x 16	
4	3290405	2	Nut M4	
5	1001101196	1	Adapter	
6	4811400	4	Washer M4	
7	1001101191	1	Connector, Strain Relief	
8	0641416	2	Bolt 1/4 x 2	
9	1705325	2	Decal - 110V	
10	3311405	2	Nut 1/4	
11	4711400	4	Washer 1/4	
12	1001193018	1	Bracket	

FIGURE 8-8. AC BOX AT PLATFORM INSTALLATION - 110V IEC YELLOW (CE & UK CA SPECS) (MACHINES WITH 4000W GENERATOR)

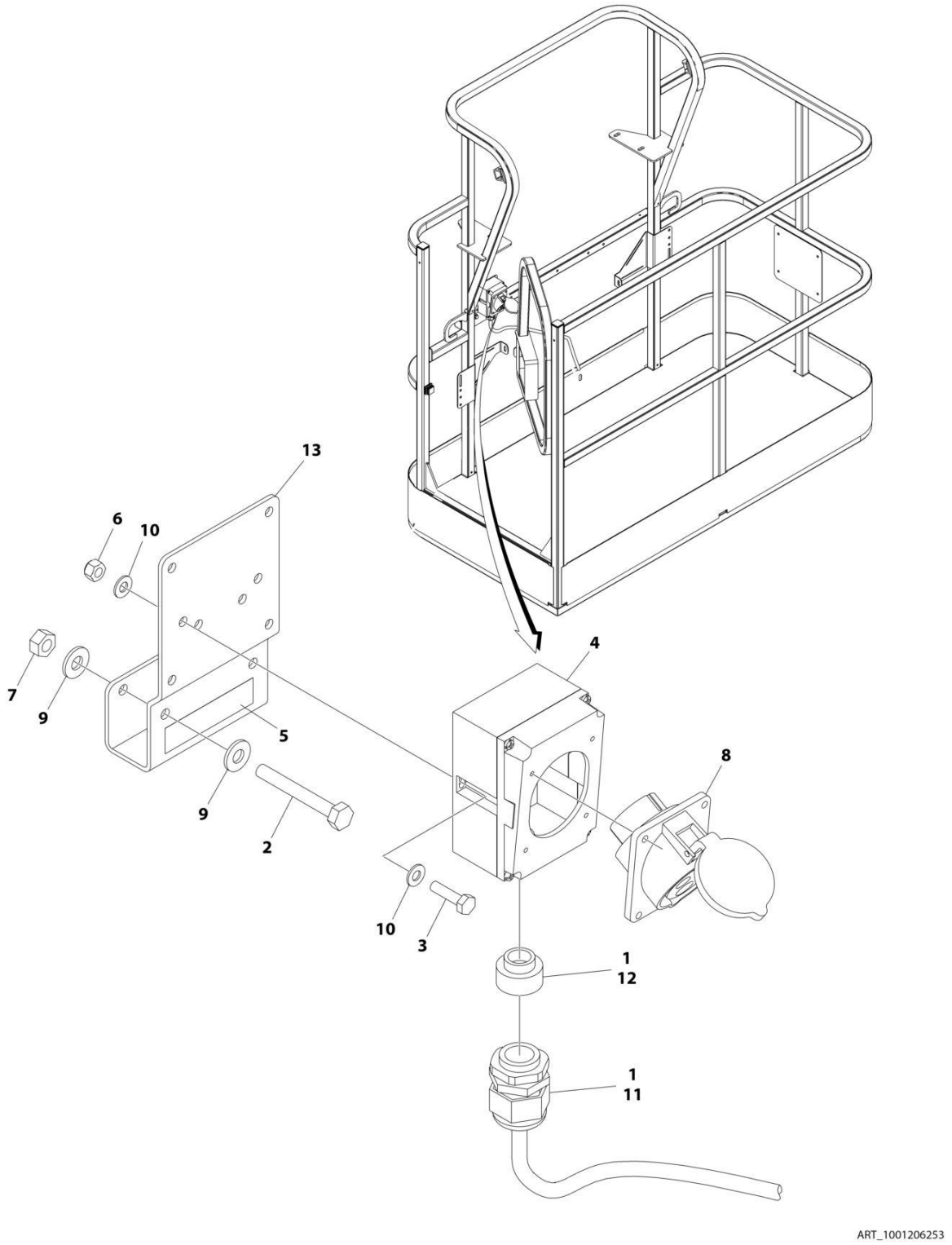

FIGURE 8-8. AC BOX AT PLATFORM INSTALLATION - 110V IEC YELLOW (CE & UK CA SPECS) (MACHINES WITH 4000W GENERATOR)

ITEM	PART NUMBER	QTY	DESCRIPTION	REV
	1001206253	Ref	AC BOX AT PLATFORM INSTALLATION - 110V IEC 60309 YELLOW WITHOUT 4000W GENERATOR	A
1	0100020	AR	Sealant, Pipe	
2	0641416	2	Bolt 1/4 x 2	
3	0700408	2	Bolt M4 x 16	
4	0861781	1	Box, Switch	
5	1705325	1	Decal - 110V	
6	3290405	2	Nut M4	
7	3311405	2	Nut 1/4	
8	4461198	1	Receptacle	
9	4711400	4	Washer 1/4	
10	4811400	4	Washer M4	
11	1001101191	1	Connector, Strain Relief	
12	1001101196	1	Adapter	
13	1001193018	1	Bracket, AC Receptacle	

FIGURE 8-9. AC BOX AT PLATFORM INSTALLATION - 220V IEC BLUE (CE & UK CA SPECS) (MACHINES WITH 2500W GENERATOR OR NO GENERATOR OPTION)

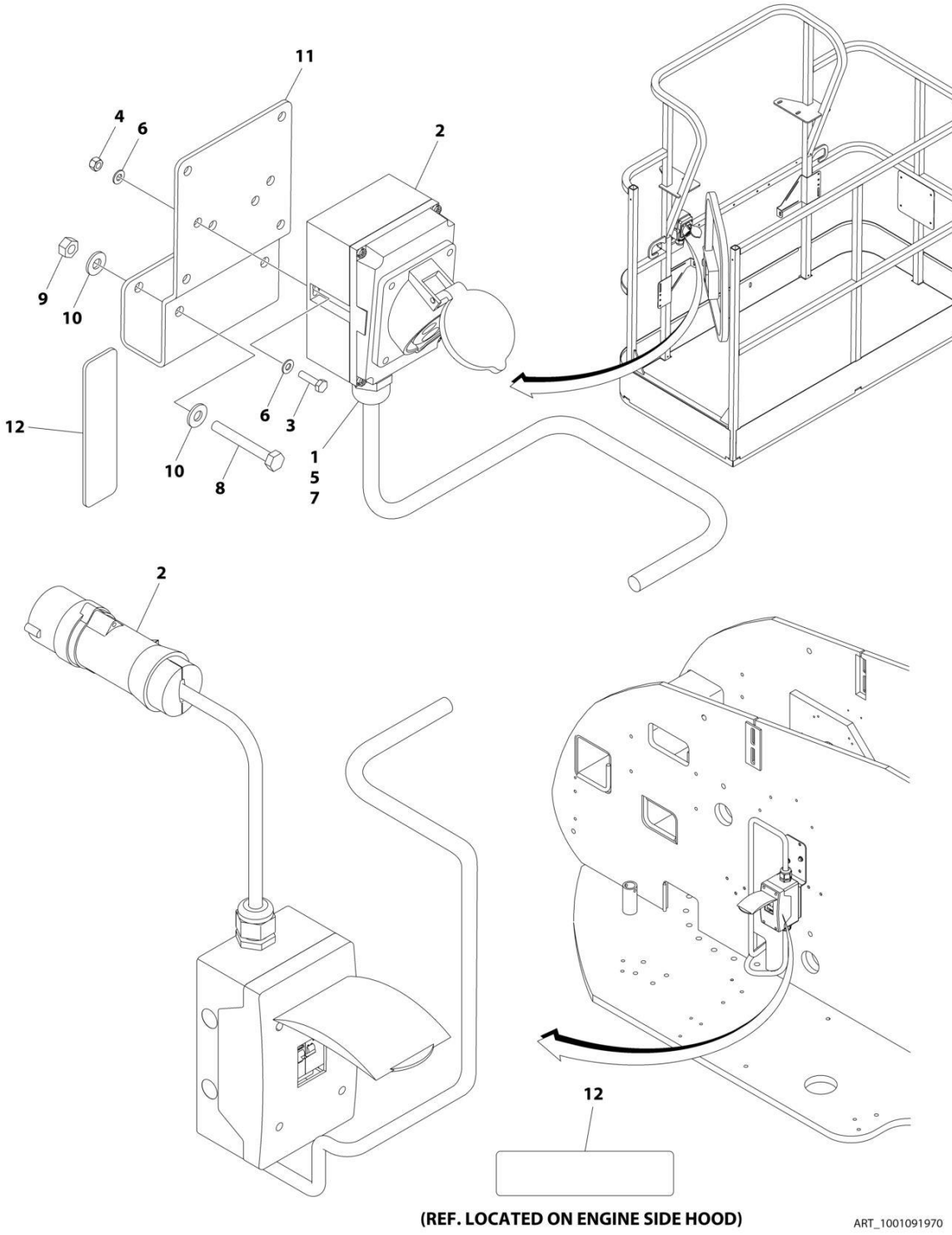

FIGURE 8-9. AC BOX AT PLATFORM INSTALLATION - 220V IEC BLUE (CE & UK CA SPECS) (MACHINES WITH 2500W GENERATOR OR NO GENERATOR OPTION)

ITEM	PART NUMBER	QTY	DESCRIPTION	REV
	1001091970	Ref	AC BOX AT PLATFORM INSTALLATION - 220V IEC BLUE	D
1	0100020	AR	Sealant, Pipe	
2	0275217	1	Receptacle Box Kit (See Separate Breakdown in this Section)	
3	0700408	2	Bolt M4 x 16	
4	3290405	2	Nut M4	
5	1001101196	1	Adapter	
6	4811400	4	Washer M4	
7	1001101191	1	Connector, Strain Relief	
8	0641416	2	Bolt 1/4 x 2	
9	3311405	2	Nut 1/4	
10	4711400	4	Washer 1/4	
11	1001193018	1	Bracket	
12	3251242	2	Decal - 240V/50Hz	

FIGURE 8-10. AC BOX AT PLATFORM INSTALLATION - 220V IEC BLUE (CE & UK CA SPECS) (MACHINES WITH 4000W GENERATOR)

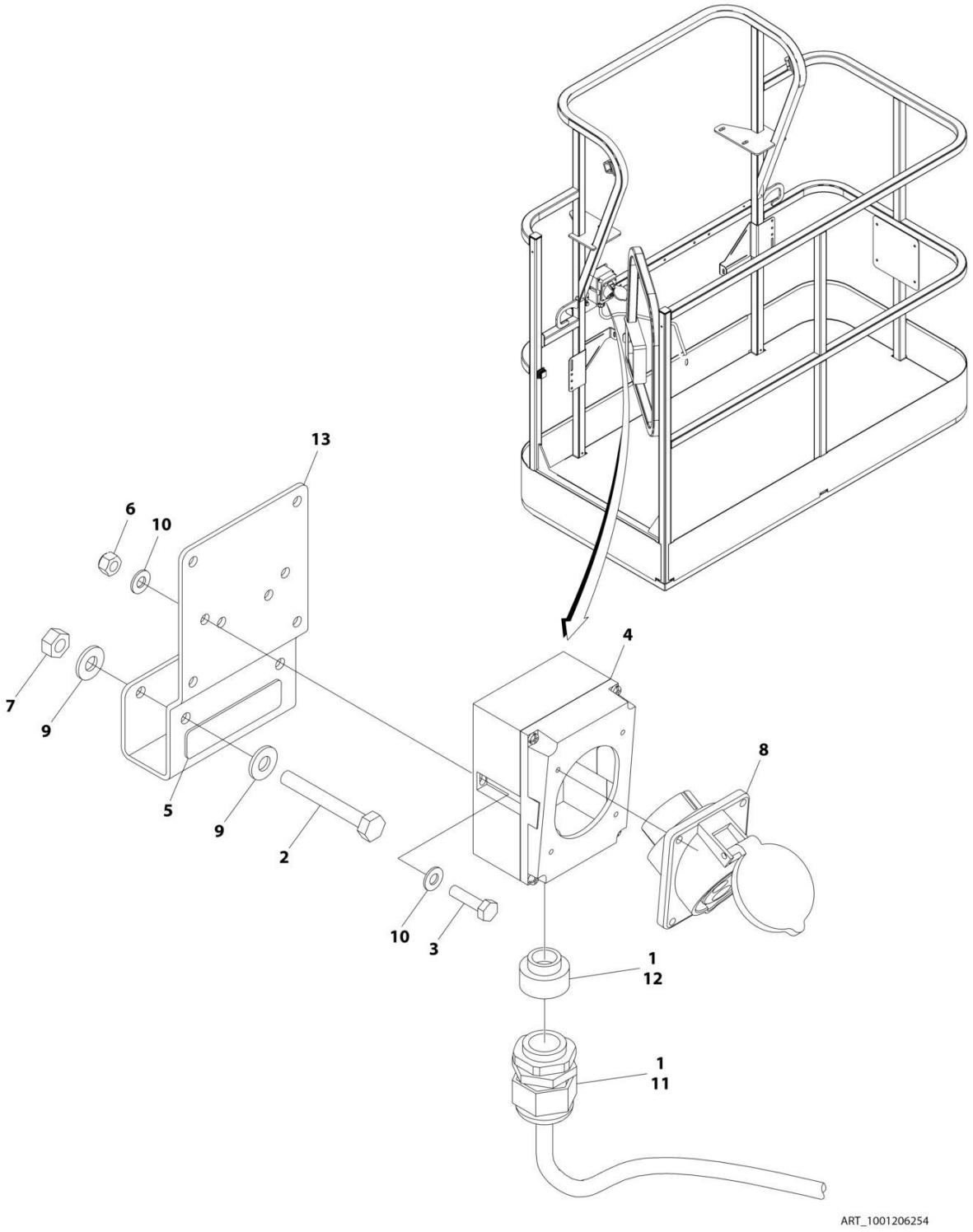

FIGURE 8-10. AC BOX AT PLATFORM INSTALLATION - 220V IEC BLUE (CE & UK CA SPECS) (MACHINES WITH 4000W GENERATOR)

ITEM	PART NUMBER	QTY	DESCRIPTION	REV
	1001206254	Ref	AC BOX AT PLATFORM INSTALLATION - 220V IEC BLUE	A
1	0100020	AR	Sealant, Pipe	
2	0641416	2	Bolt 1/4 x 2	
3	0700408	2	Bolt M4 x 16	
4	0861781	1	Box, Switch	
5	3251242	1	Decal - 240V/50Hz	
6	3290405	2	Nut M4	
7	3311405	2	Nut 1/4	
8	4461201	1	Receptacle	
9	4711400	4	Washer 1/4	
10	4811400	4	Washer M4	
11	1001101191	1	Connector, Strain Relief	
12	1001101196	1	Adapter	
13	1001193018	1	Bracket, AC Receptacle	

FIGURE 8-11. AC BOX AT PLATFORM INSTALLATION - 220V CEE7 POST GROUND (CE & UK CA SPECS) (MACHINES WITH 2500W GENERATOR OR NO GENERATOR OPTION)

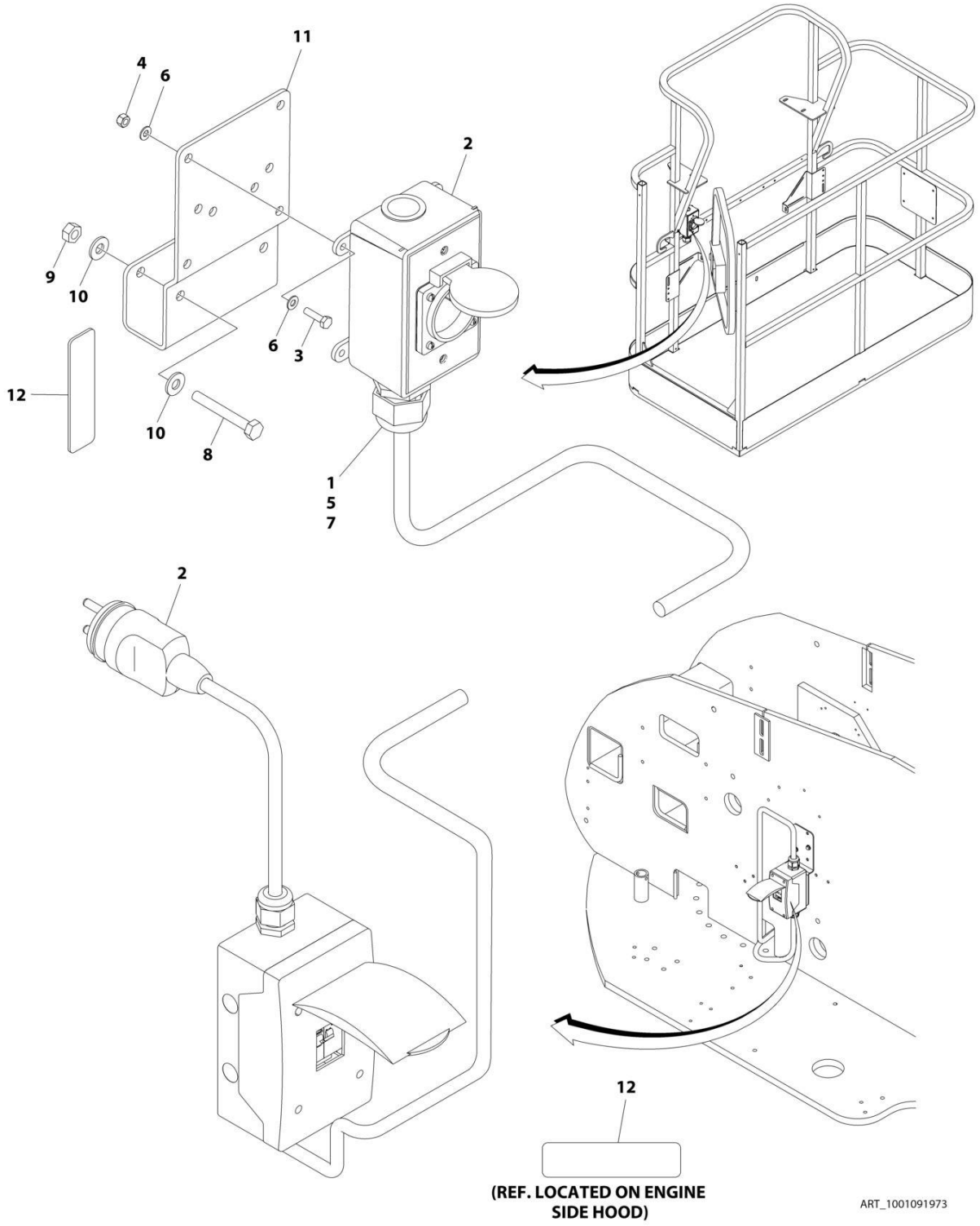

FIGURE 8-11. AC BOX AT PLATFORM INSTALLATION - 220V CEE7 POST GROUND (CE & UK CA SPECS) (MACHINES WITH 2500W GENERATOR OR NO GENERATOR OPTION)

ITEM	PART NUMBER	QTY	DESCRIPTION	REV
	1001091973	Ref	AC BOX AT PLATFORM INSTALLATION - 220V CEE7 2X4 BOX POST GROUND	F
1	0100020	AR	Sealant, Pipe	
2	0275452	1	Receptacle Box Kit (See Separate Breakdown in this Section)	
3	0700408	4	Bolt M4 x 16	
4	3290405	4	Nut M4	
5	1001101197	1	Adapter	
6	4811400	8	Washer M4	
7	1001101191	1	Connector, Strain Relief	
8	0641416	2	Bolt 1/4 x 2	
9	3311405	2	Nut 1/4	
10	4711400	4	Washer 1/4	
11	1001193018	1	Bracket	
12	3251242	2	Decal - 240V/50Hz	
13	4460806	2	Terminal, Fork (Not Shown)	
14	1001205958	1	Terminal (Not Shown)	

FIGURE 8-12. AC BOX AT PLATFORM INSTALLATION - 220V CEE7 POST GROUND (CE & UK CA SPECS) (MACHINES WITH 4000W GENERATOR)

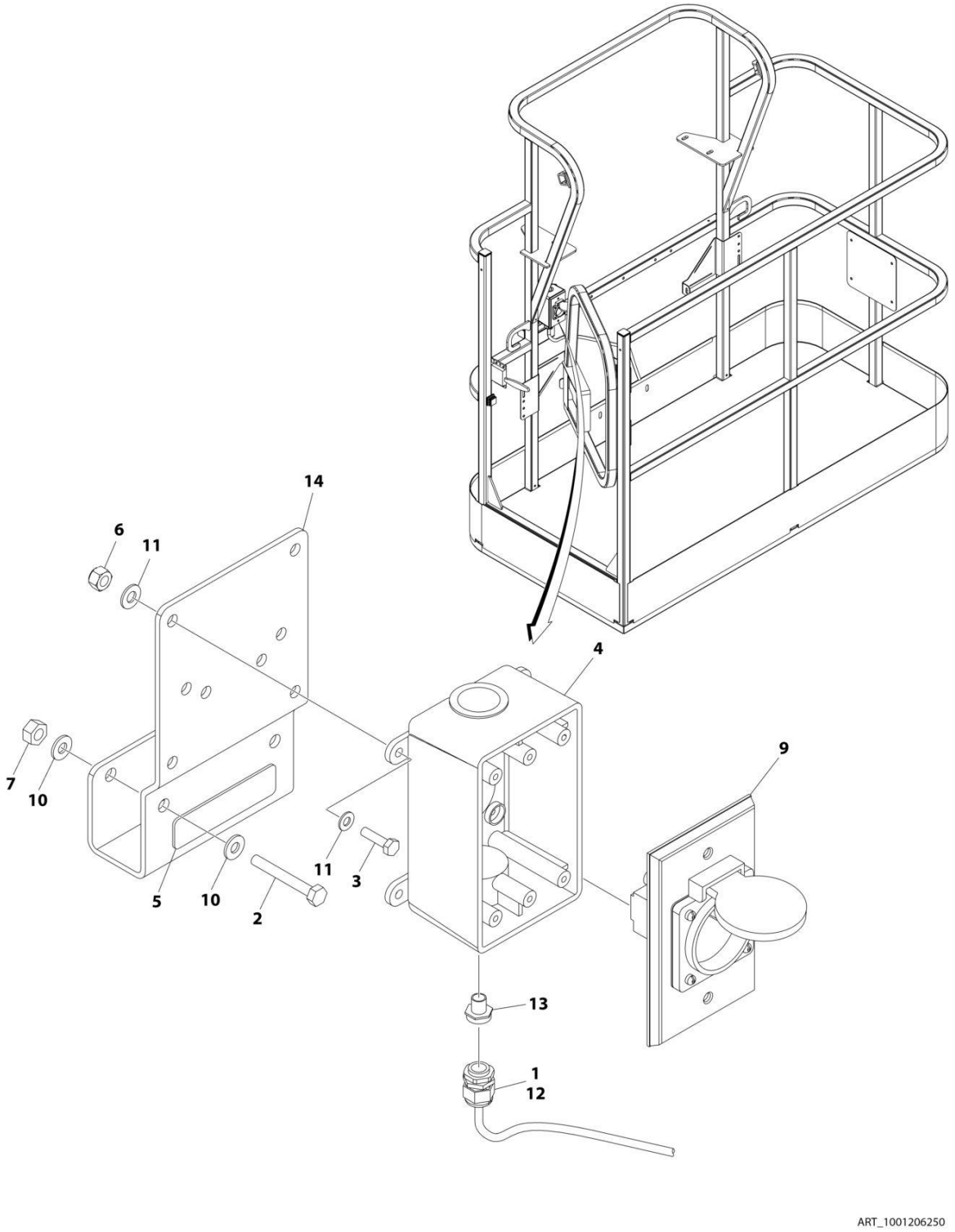

FIGURE 8-12. AC BOX AT PLATFORM INSTALLATION - 220V CEE7 POST GROUND (CE & UK CA SPECS) (MACHINES WITH 4000W GENERATOR)

ITEM	PART NUMBER	QTY	DESCRIPTION	REV
	1001206250	Ref	AC BOX AT PLATFORM INSTALLATION - 220V CEE7 2X4 BOX POST GROUND	A
1	0100020	AR	Sealant, Pipe	
2	0641416	2	Bolt 1/4 x 2	
3	0700408	4	Bolt M4 x 16	
4	0861731	1	Box, Switch	
5	3251242	1	Decal - 240V/50Hz	
6	3290405	4	Nut M4	
7	3311405	2	Nut 1/4	
8	4460806	2	Terminal, Fork (Not Shown)	
9	4461244	1	Receptacle	
10	4711400	4	Washer 1/4	
11	4811400	8	Washer M4	
12	1001101191	1	Connector, Strain Relief	
13	1001101197	1	Adapter	
14	1001193018	1	Bracket, AC Receptacle	
15	1001205958	1	Terminal (Not Shown)	

FIGURE 8-13. AC BOX AT PLATFORM INSTALLATION - 220V CEE7 SIDE GROUND (CE & UK CA SPECS) (MACHINES WITH 2500W GENERATOR OR NO GENERATOR OPTION)

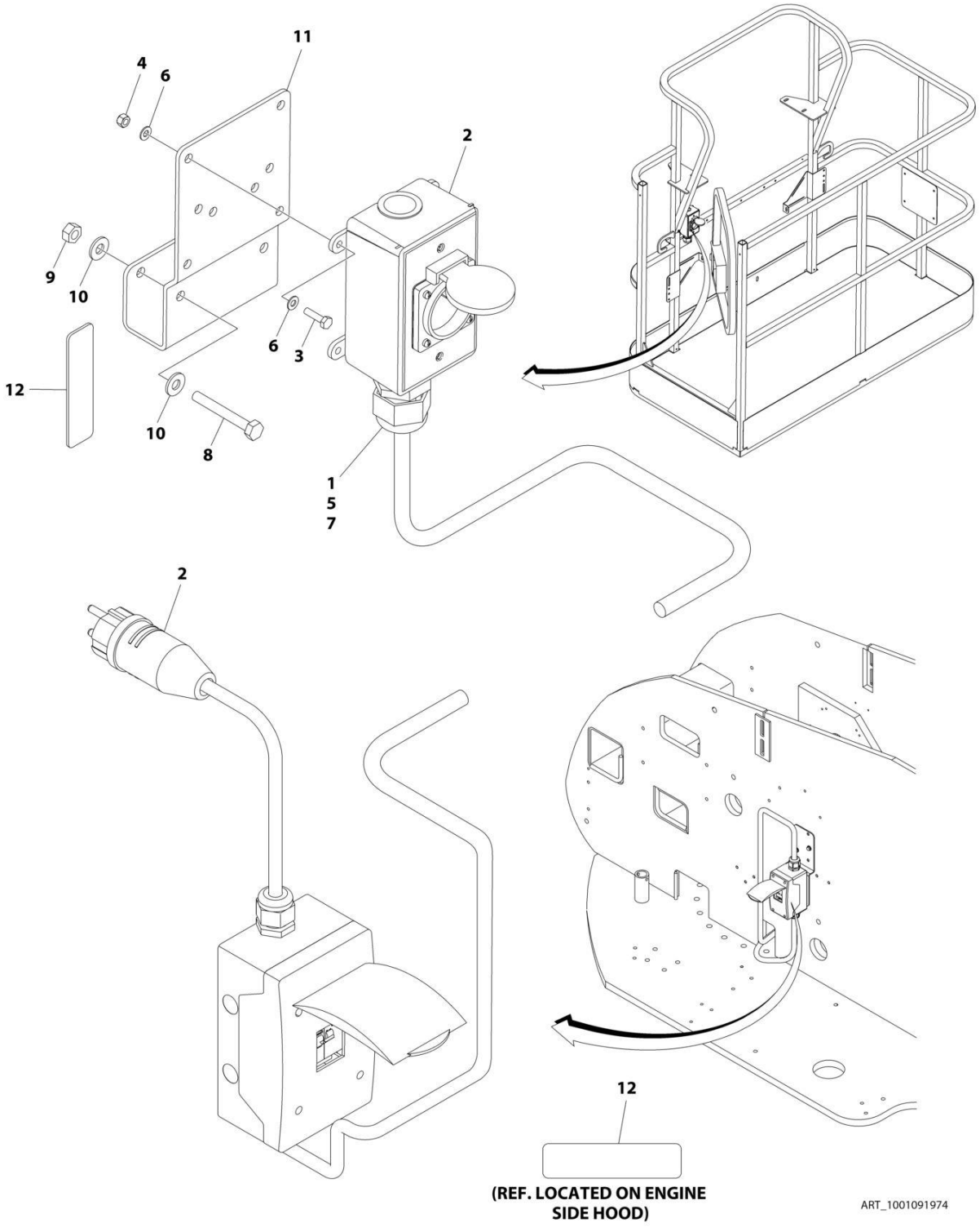

FIGURE 8-13. AC BOX AT PLATFORM INSTALLATION - 220V CEE7 SIDE GROUND (CE & UK CA SPECS) (MACHINES WITH 2500W GENERATOR OR NO GENERATOR OPTION)

ITEM	PART NUMBER	QTY	DESCRIPTION	REV
	1001091974	Ref	AC BOX AT PLATFORM INSTALLATION - 220V CEE7 2X4 BOX SIDE GROUND	F
1	0100020	AR	Sealant, Pipe	
2	0275453	1	Receptacle Box Kit (See Separate Breakdown in this Section)	
3	0700408	4	Bolt M4 x 16	
4	3290405	4	Nut M4	
5	1001101197	1	Adapter	
6	4811400	8	Washer M4	
7	1001101191	1	Connector, Strain Relief	
8	0641416	2	Bolt 1/4 x 2	
9	3311405	2	Nut 1/4	
10	4711400	4	Washer 1/4	
11	1001193018	1	Bracket	
12	3251242	2	Decal - 240V/50Hz	
13	4460806	2	Terminal, Fork (Not Shown)	
14	1001205958	1	Terminal (Not Shown)	

FIGURE 8-14. AC BOX AT PLATFORM INSTALLATION - 220V CEE7 SIDE GROUND (CE & UK CA SPECS) (MACHINES WITH 4000W GENERATOR)

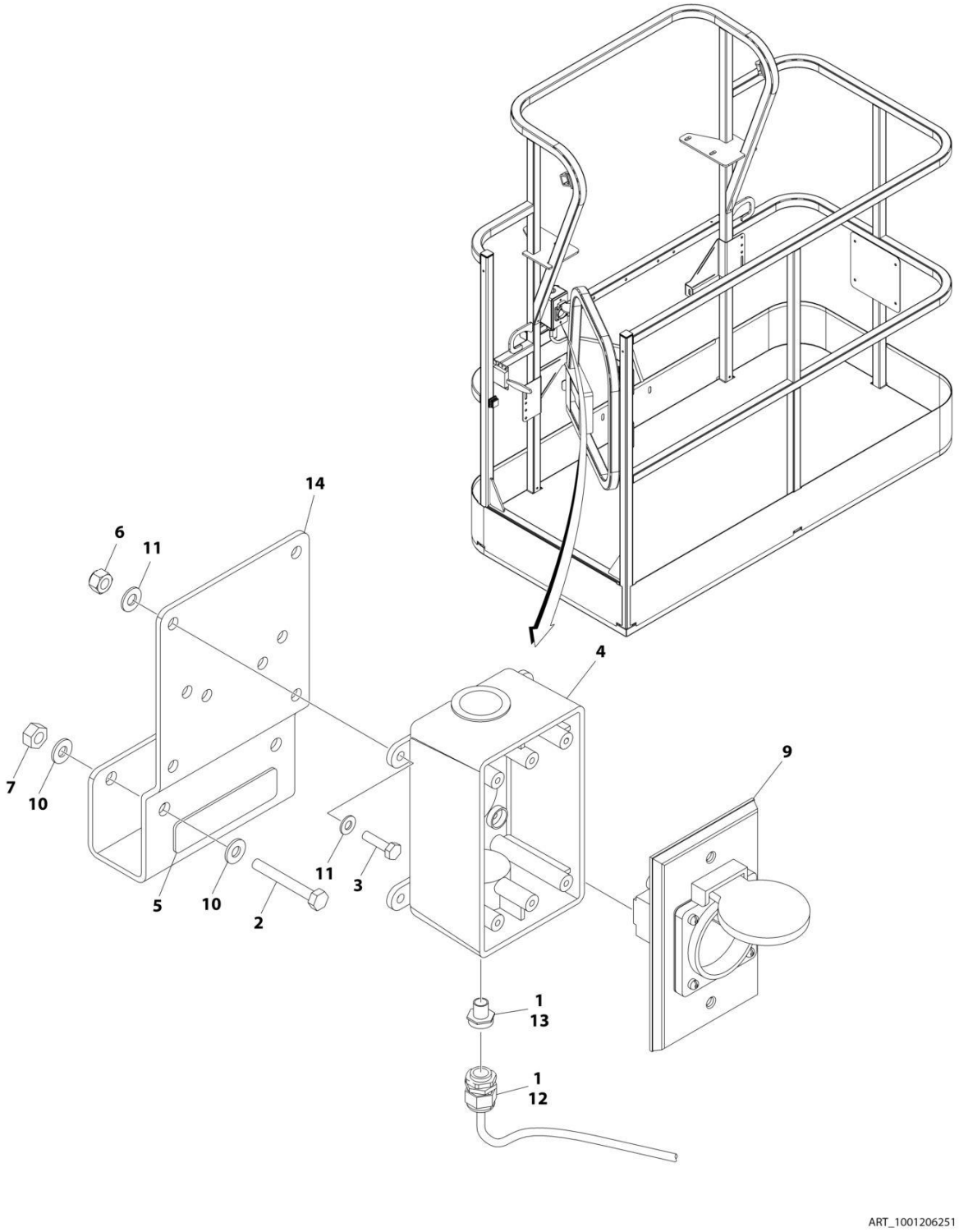

FIGURE 8-14. AC BOX AT PLATFORM INSTALLATION - 220V CEE7 SIDE GROUND (CE & UK CA SPECS) (MACHINES WITH 4000W GENERATOR)

ITEM	PART NUMBER	QTY	DESCRIPTION	REV
	1001206251	Ref	AC BOX AT PLATFORM INSTALLATION - 220V CEE7 2X4 BOX SIDE GROUND	A
1	0100020	AR	Sealant, Pipe	
2	0641416	2	Bolt 1/4 x 2	
3	0700408	4	Bolt M4 x 16	
4	0861731	1	Box, Switch	
5	3251242	1	Decal - 240V/50Hz	
6	3290405	4	Nut M4	
7	3311405	2	Nut 1/4	
8	4460806	2	Terminal, Fork (Not Shown)	
9	4461245	1	Receptacle	
10	4711400	4	Washer 1/4	
11	4811400	8	Washer M4	
12	1001101191	1	Connector, Strain Relief	
13	1001101197	1	Adapter	
14	1001193018	1	Bracket, AC Receptacle	
15	1001205958	1	Terminal (Not Shown)	

FIGURE 8-15. AC BOX AT PLATFORM INSTALLATION - 220V AFSINT 107 KEYED GROUND (CE & UK CA SPECS) (MACHINES WITH 2500W GENERATOR OR NO GENERATOR OPTION)

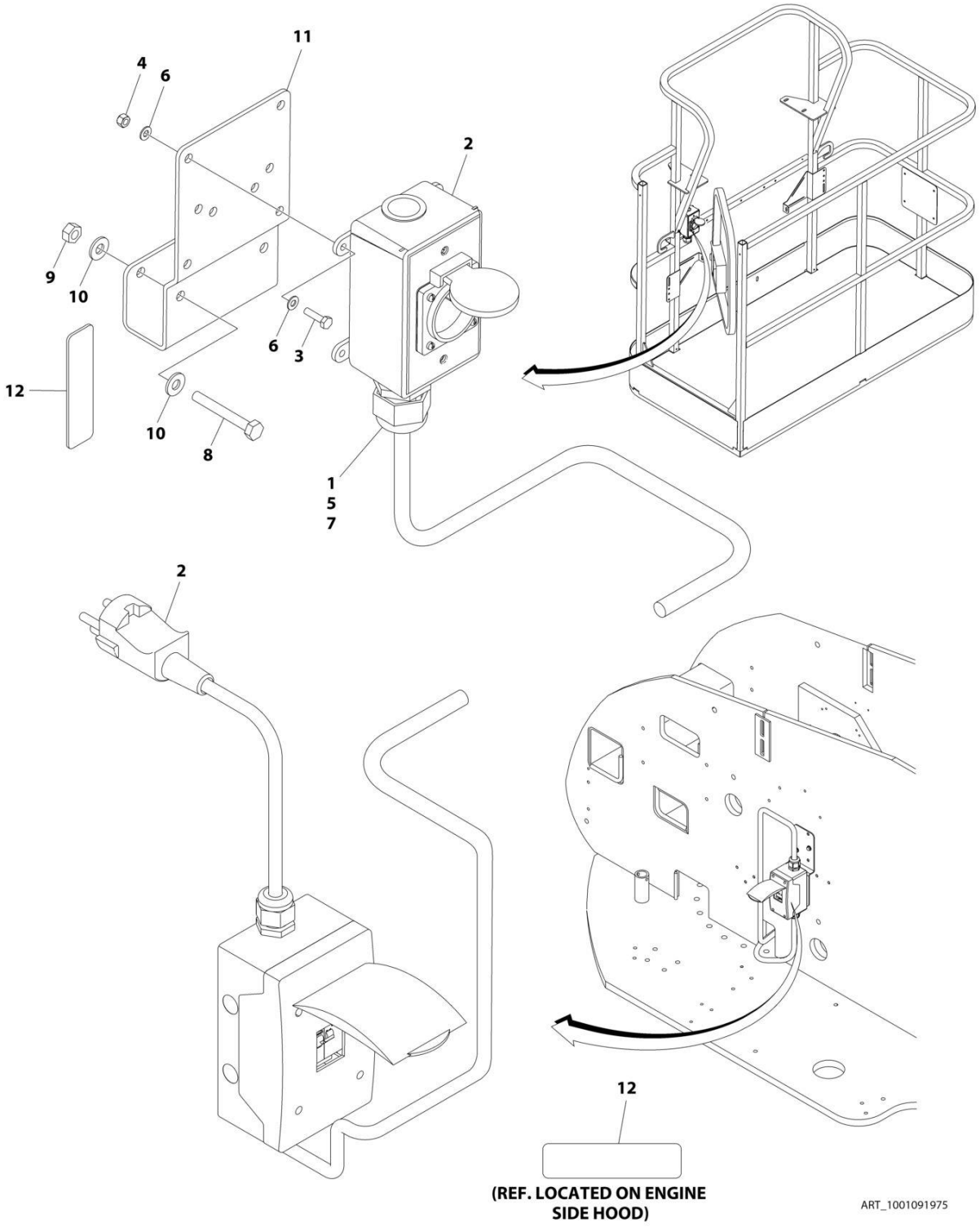

FIGURE 8-15. AC BOX AT PLATFORM INSTALLATION - 220V AFSINT 107 KEYED GROUND (CE & UK CA SPECS) (MACHINES WITH 2500W GENERATOR OR NO GENERATOR OPTION)

ITEM	PART NUMBER	QTY	DESCRIPTION	REV
	1001091975	Ref	AC BOX AT PLATFORM INSTALLATION - 220V AFSINT 107 2X4 BOX KEYED GROUND	F
1	0100020	AR	Sealant, Pipe	
2	0275454	1	Receptacle Box Kit (See Separate Breakdown in this Section)	
3	0700408	4	Bolt M4 x 16	
4	3290405	4	Nut M4	
5	1001101197	1	Adapter	
6	4811400	8	Washer M4	
7	1001101191	1	Connector, Strain Relief	
8	0641416	2	Bolt 1/4 x 2	
9	3311405	2	Nut 1/4	
10	4711400	4	Washer 1/4	
11	1001193018	1	Bracket	
12	3251242	2	Decal - 240V/50Hz	
13	1001205958	3	Terminal (Not Shown)	

FIGURE 8-16. AC BOX AT PLATFORM INSTALLATION - 220V AFSINT 107 KEYED GROUND (CE & UK CA SPECS) (MACHINES WITH 4000W GENERATOR)

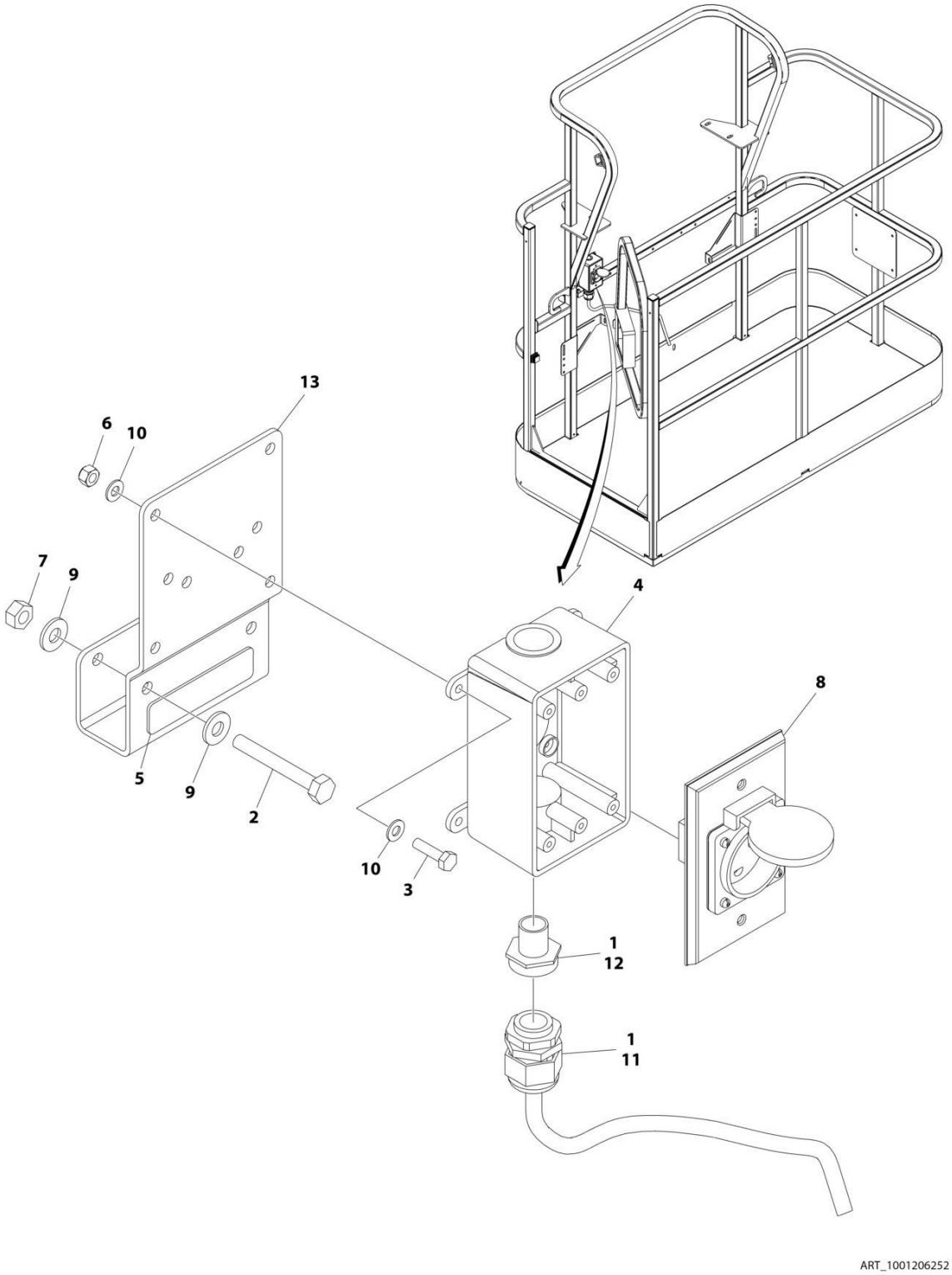

FIGURE 8-16. AC BOX AT PLATFORM INSTALLATION - 220V AFSINT 107 KEYED GROUND (CE & UK CA SPECS) (MACHINES WITH 4000W GENERATOR)

ITEM	PART NUMBER	QTY	DESCRIPTION	REV
	1001206252	Ref	AC BOX AT PLATFORM INSTALLATION - 220V AFSINT 107 2x4 BOX KEYED GROUND	A
1	0100020	AR	Sealant, Pipe	
2	0641416	2	Bolt 1/4 x 2	
3	0700408	4	Bolt M4 x 16	
4	0861731	1	Box, Switch	
5	3251242	1	Decal - 240V/50Hz	
6	3290405	4	Nut M4	
7	3311405	2	Nut 1/4	
8	4461246	1	Receptacle	
9	4711400	4	Washer 1/4	
10	4811400	8	Washer M4	
11	1001101191	1	Connector, Strain Relief	
12	1001101197	1	Adapter	
13	1001193018	1	Bracket, AC Receptacle	
14	1001205958	3	Terminal (Not Shown)	

FIGURE 8-17. AC BOX AT PLATFORM INSTALLATION - 220V (2X4 BOX & COVER ONLY - LOCALLY SUPPLIED RECEPTACLE) (4000W GENERATOR)

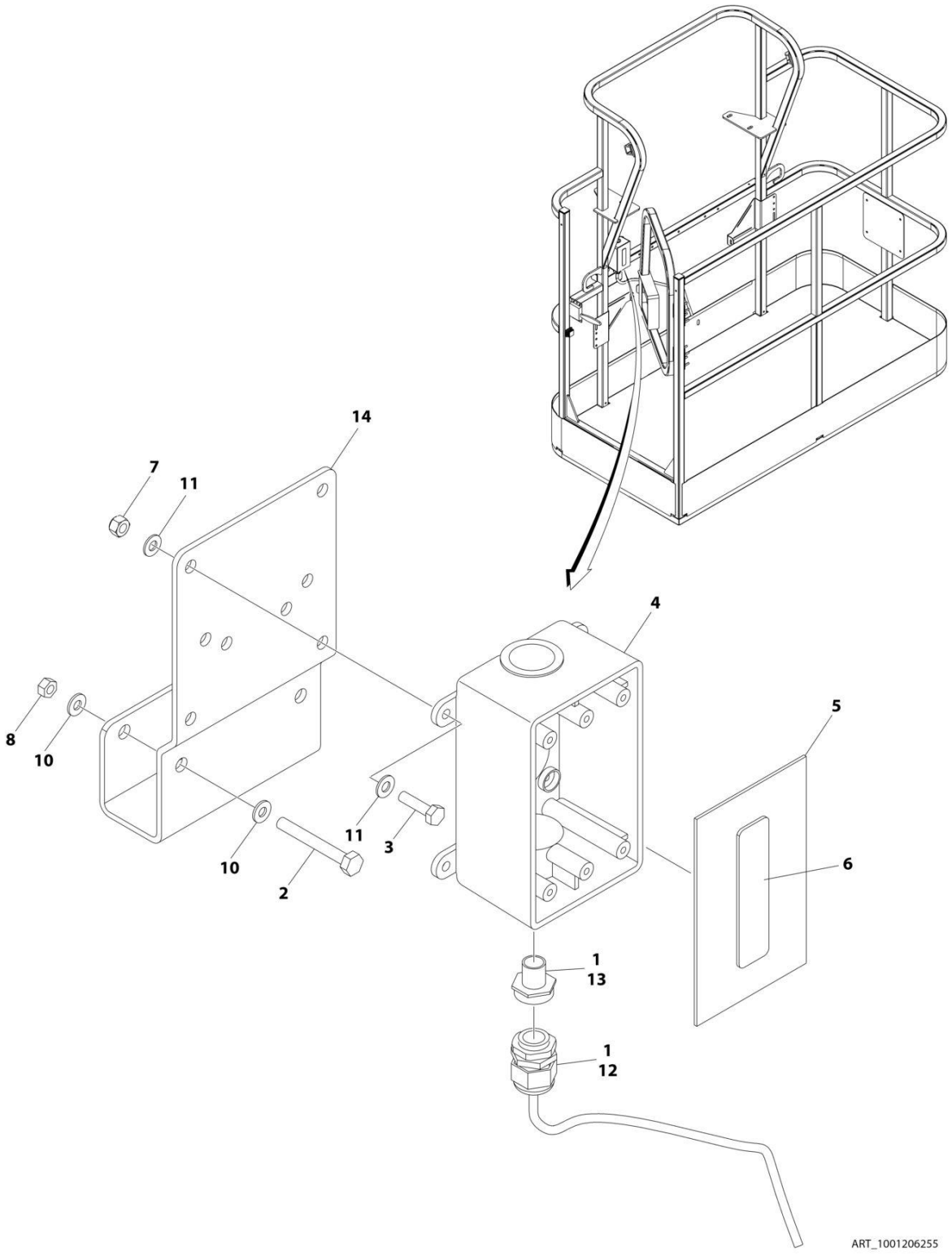

FIGURE 8-17. AC BOX AT PLATFORM INSTALLATION - 220V (2X4 BOX & COVER ONLY - LOCALLY SUPPLIED RECEPTACLE) (4000W GENERATOR)

ITEM	PART NUMBER	QTY	DESCRIPTION	REV
	1001206255	Ref	AC BOX AT PLATFORM INSTALLATION - BOX WITH COVER (2X4 BOX) WITH 4000W GENERATOR	A
1	0100020	AR	Sealant, Pipe	
2	0641416	2	Bolt 1/4 x 2	
3	0700408	4	Bolt M4 x 16	
4	0861731	1	Box, Switch	
5	1670603	1	Cover	
6	3251242	1	Decal - 240V-50Hz	
7	3290405	4	Nut M4	
8	3311405	2	Nut 1/4	
10	4711400	4	Washer 1/4	
11	4811400	8	Washer M4	
12	1001101191	1	Connector, Strain Relief	
13	1001101197	1	Adapter	
14	1001193018	1	Bracket, AC Receptacle	

FIGURE 8-18. AC BOX AT PLATFORM INSTALLATION - 240V GFCI RECEPTACLE (ANSI AND CSA SPECS WITH 4000W SKYPOWER GENERATOR)

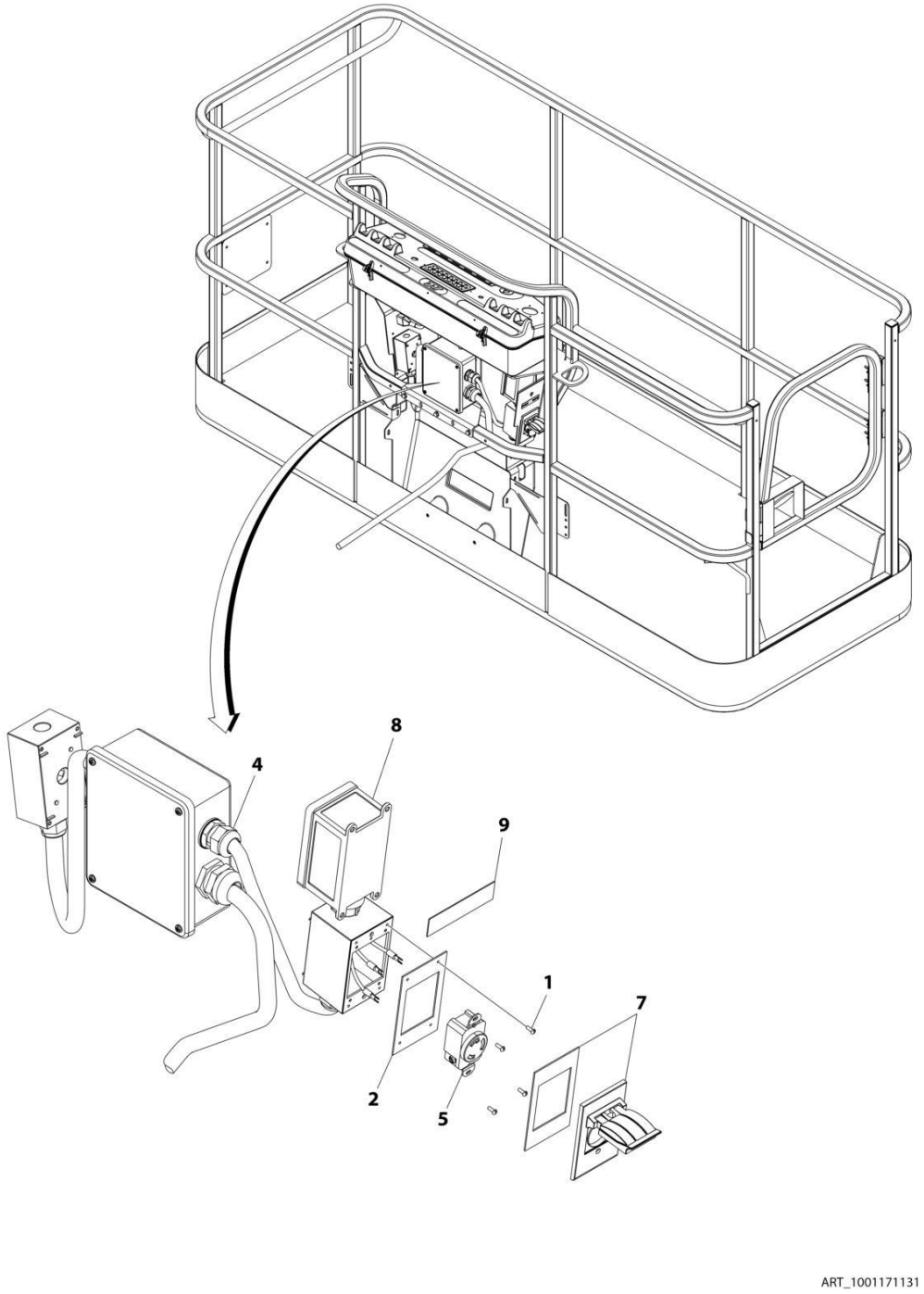

FIGURE 8-18. AC BOX AT PLATFORM INSTALLATION - 240V GFCI RECEPTACLE (ANSI AND CSA SPECS WITH 4000W SKYPOWER GENERATOR)

ITEM	PART NUMBER	QTY	DESCRIPTION	REV
	1001171131	Ref	AC BOX AT PLATFORM INSTALLATION - 240V RECEPTACLE	B
1	3910606	4	Screw 6 x 3/8	
2	3960422	1	Gasket	
3	4240018	AR	Tie-Strap (Not Shown)	
4	4460425	1	Connector, Strain Relief	
5	1001176862	1	Receptacle	
7	1001110872	1	Cover, Receptacle	
8	1001159120	1	Receptacle/Breaker Box Assembly	
8	1001148675	1	Box, Receptacle	
8	1001159118	1	Breaker GFCI 30Amp 240VAC	
8	4460612	1	Connector, Strain Relief	
8	1001159119	1	Connector (Between Boxes)	
9	1705374	1	Decal - 240V/60Hz	

FIGURE 8-19. AC BOX AT PLATFORM INSTALLATION - 240V GFCI RECEPTACLE (ANSI AND CSA SPECS WITH 7500W SKYPOWER GENERATOR)

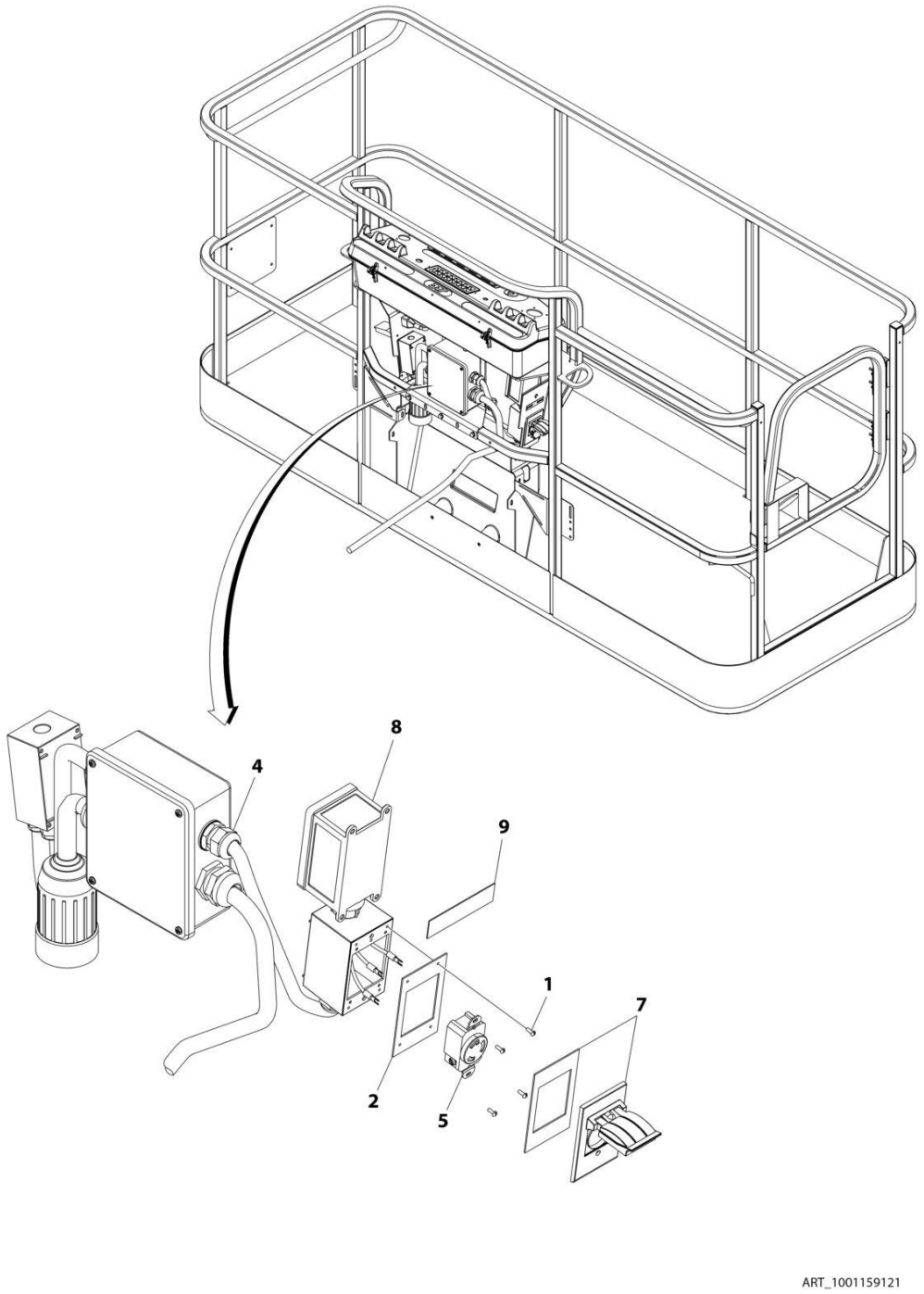

FIGURE 8-19. AC BOX AT PLATFORM INSTALLATION - 240V GFCI RECEPTACLE (ANSI AND CSA SPECS WITH 7500W SKYPOWER GENERATOR)

ITEM	PART NUMBER	QTY	DESCRIPTION	REV
	1001159121	Ref	AC BOX AT PLATFORM INSTALLATION - 240V RECEPTACLE	B
1	3910606	4	Screw 6 x 3/8	
2	3960422	1	Gasket	
3	4240018	AR	Tie-Strap (Not Shown)	
4	4460425	1	Connector, Strain Relief	
5	4460958	1	Receptacle	
7	1001110872	1	Cover, Receptacle	
8	1001159120	1	Receptacle/Breaker Box Assembly	
8	1001148675	1	Box, Receptacle	
8	1001159118	1	Breaker Box Assembly	
8	4460612	1	Connector, Strain Relief	
8	1001159119	1	Connector (Between Boxes)	
9	1705374	1	Decal - 240V/60Hz	

FIGURE 8-20. AC BREAKER BOX INSTALLATION - WITH 3 BREAKERS (CE & UK CA SPECS WITH 4000W GENERATOR)

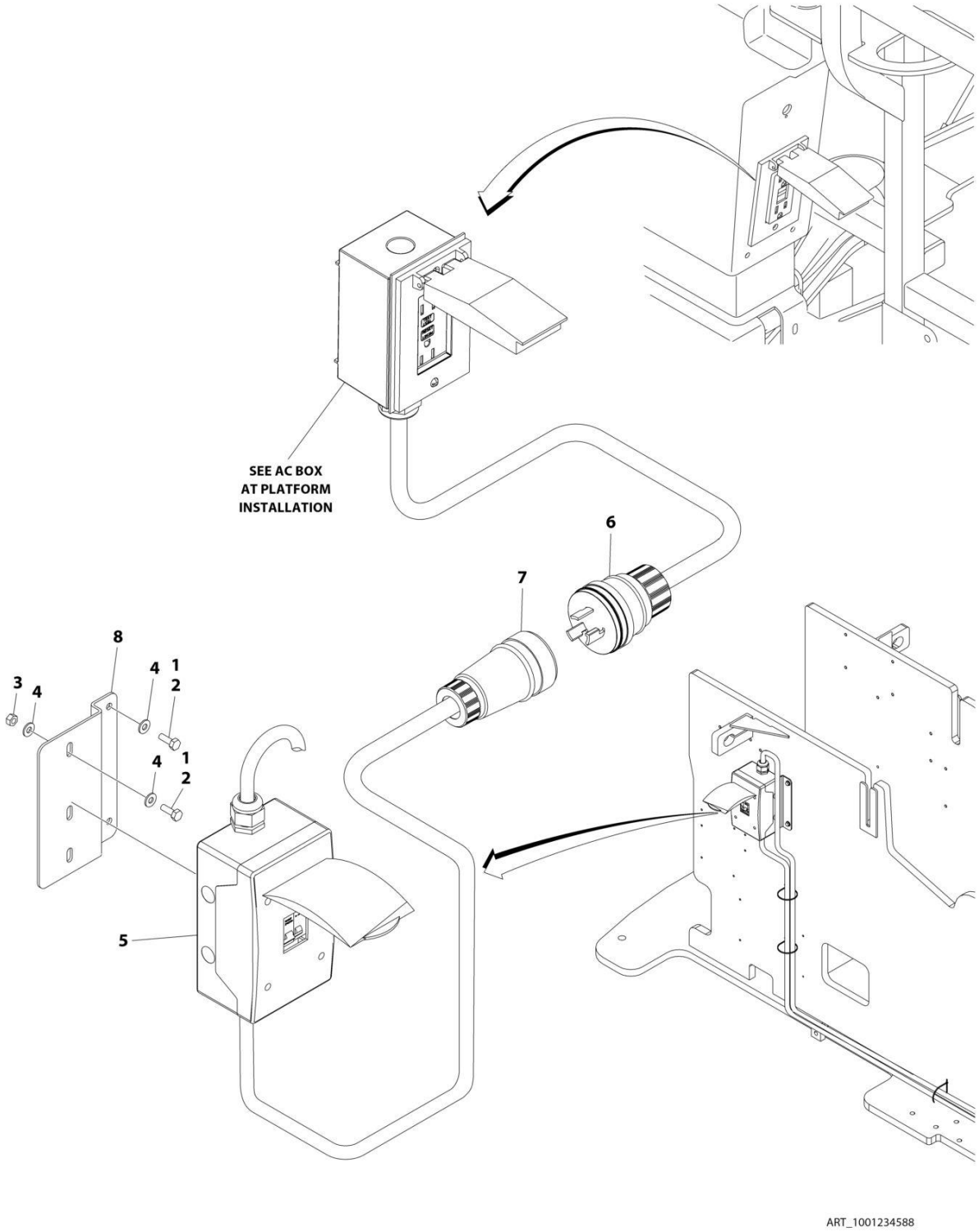

FIGURE 8-20. AC BREAKER BOX INSTALLATION - WITH 3 BREAKERS (CE & UK CA SPECS WITH 4000W GENERATOR)

ITEM	PART NUMBER	QTY	DESCRIPTION	REV
	1001234588	Ref	AC BREAKER BOX INSTALLATION	A
1	0100011	AR	Compound, Locking	
2	0641406	4	Bolt 1/4 x 3/4	
3	3311405	2	Nut 1/4	
4	4711400	6	Washer 1/4	
5	1001205690	1	Breaker Box Kit - With 3 Breakers (See Separate Breakdown in this Section)	
6	1001213584	1	Plug, Male	
7	1001213585	1	Receptacle, Female	
8	1001229080	1	Bracket	
9	4240099	AR	Tie-Strap (Not Shown)	

FIGURE 8-21. BEACON CONTROL HARNESS (BLUE AND RED STROBE LIGHTS)

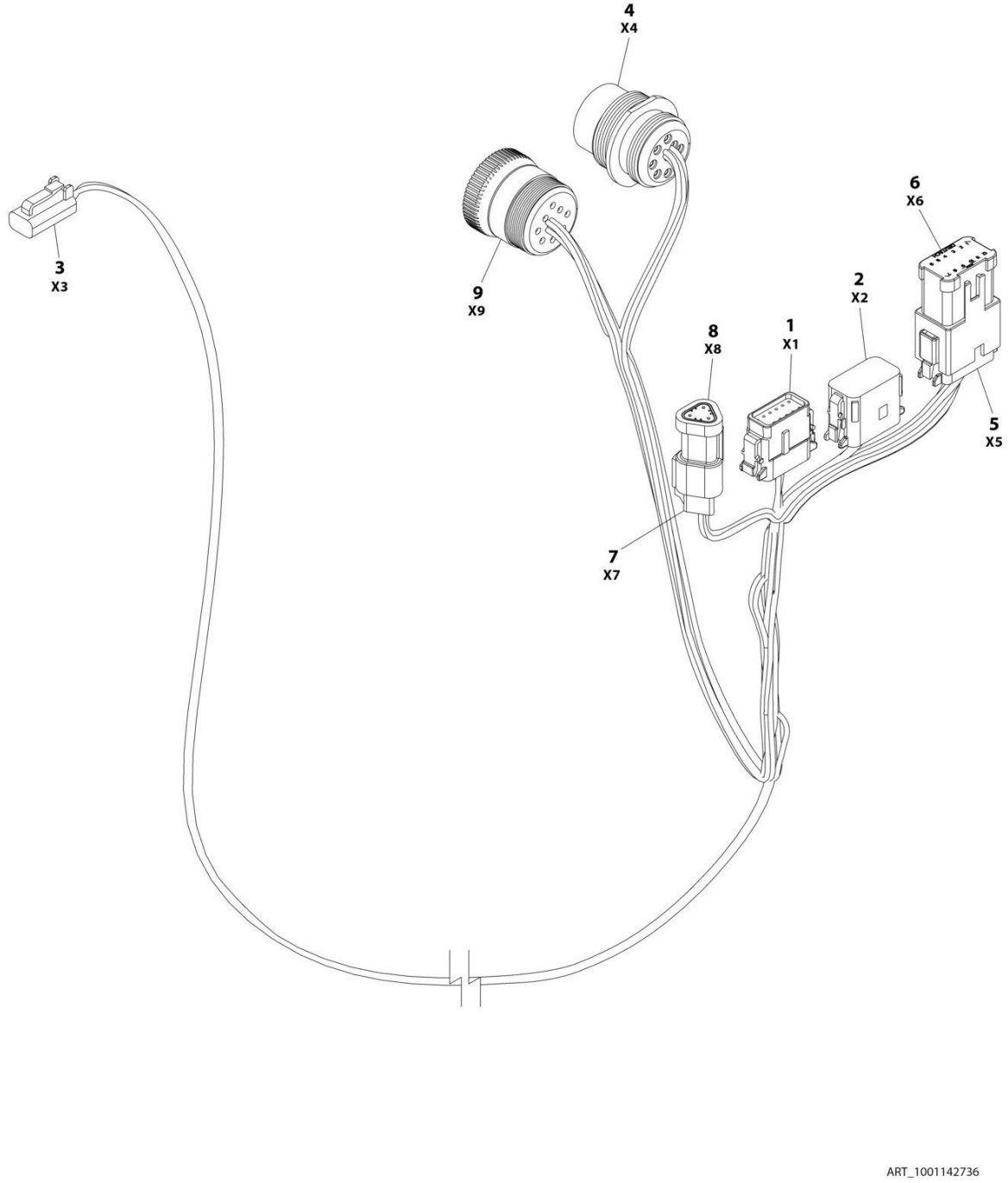

FIGURE 8-21. BEACON CONTROL HARNESS (BLUE AND RED STROBE LIGHTS)

ITEM	PART NUMBER	QTY	DESCRIPTION	REV
	1001142736	Ref	STROBE LIGHT HARNESS	F
1	1001116808	1	Plug, Male - 12 Position	
1	4460928	3	Socket, Female	
1	4460518	9	Plug, Terminal	
2	1001116774	1	Plug, Male - 12 Position	
2	4460928	3	Socket, Female	
2	4460518	9	Plug, Terminal	
3	4460891	1	Plug, Male - 2 Position	
3	4460465	2	Socket, Female	
4	1001112612	1	Connector - 9 Position	
4	4460464	6	Pin, Male	
4	4460466	3	Plug, Terminal	
5	4460933	1	Plug, Male - 12 Position	
5	4460465	12	Socket, Female	
6	1001119020	1	Bussbar - 12 Position	
7	4461095	1	Plug, Male - 3 Position	
7	4460465	3	Socket, Female	
8	4461070	1	Bussbar - 3 Position	
9	1001112796	1	Connector - 9 Position	
9	4460465	6	Socket, Female	
9	4460466	3	Plug, Terminal	

FIGURE 8-22. BATTERY DISCONNECT

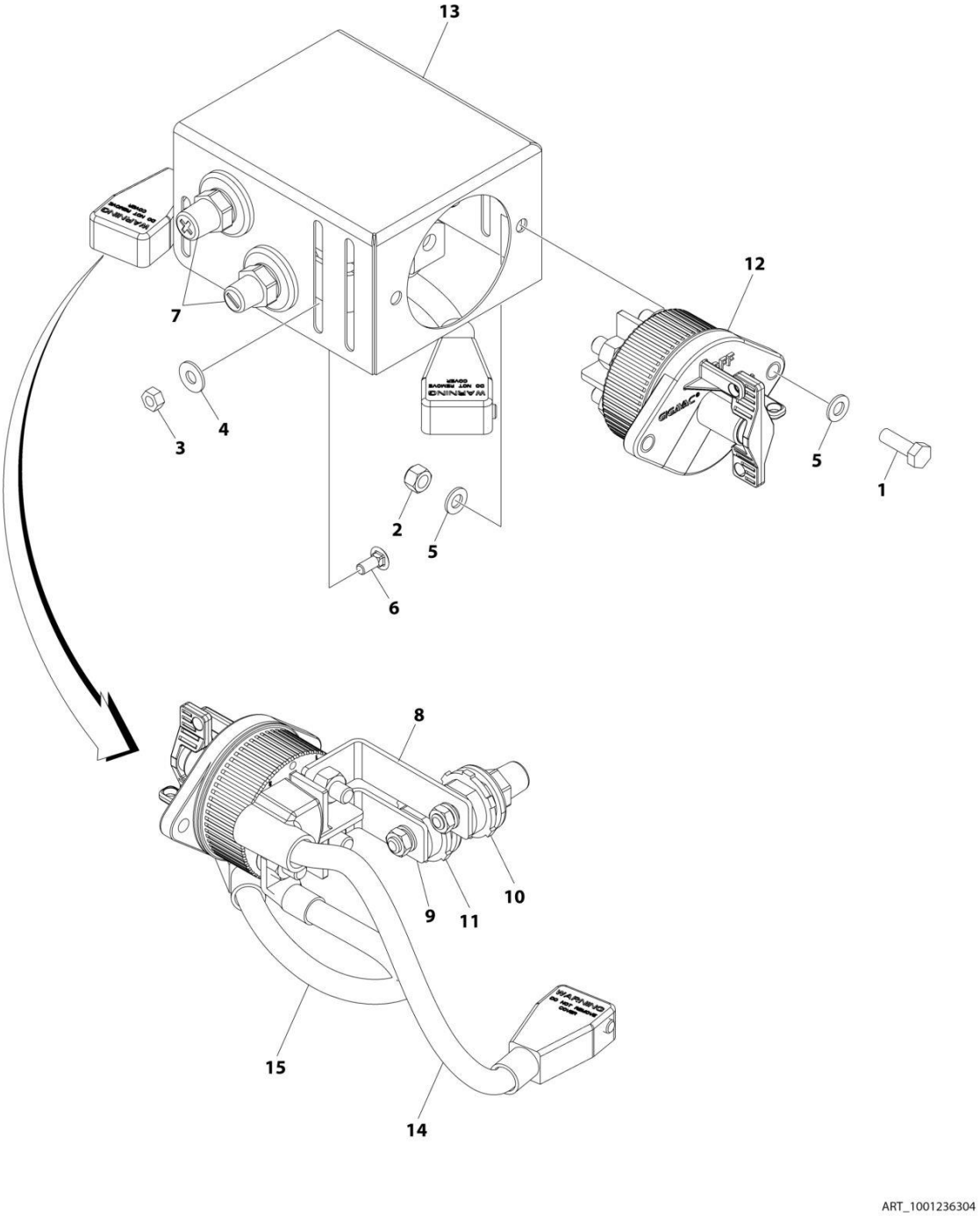

FIGURE 8-22. BATTERY DISCONNECT

ITEM	PART NUMBER	QTY	DESCRIPTION	REV
	1001236304	Ref	BATTERY DISCONNECT SWITCH INSTALLATION	A
1	0760812	2	Bolt M8 x 25	
2	3290805	2	Nut M8	
3	3311405	3	Nut 1/4	
4	4751400	3	Washer 1/4	
5	4811900	4	Washer M8	
6	88411013	3	Bolt 1/4 x 3/4	
7	1001206476	1	Connectors, Post	
8	1001209432	1	Bussbar	
9	1001209474	1	Bussbar	
10	1001214570	1	Connector (Red)	
11	1001214571	1	Connector (Black)	
12	1001225346	1	Switch, Battery	
13	1001226531	1	Mount	
14	1001236504	1	Cable, Battery (+)	
15	1001236505	1	Cable, Battery (-)	

FIGURE 8-23. BOOM CABLES INSTALLATION - WITH 2500W GENERATOR

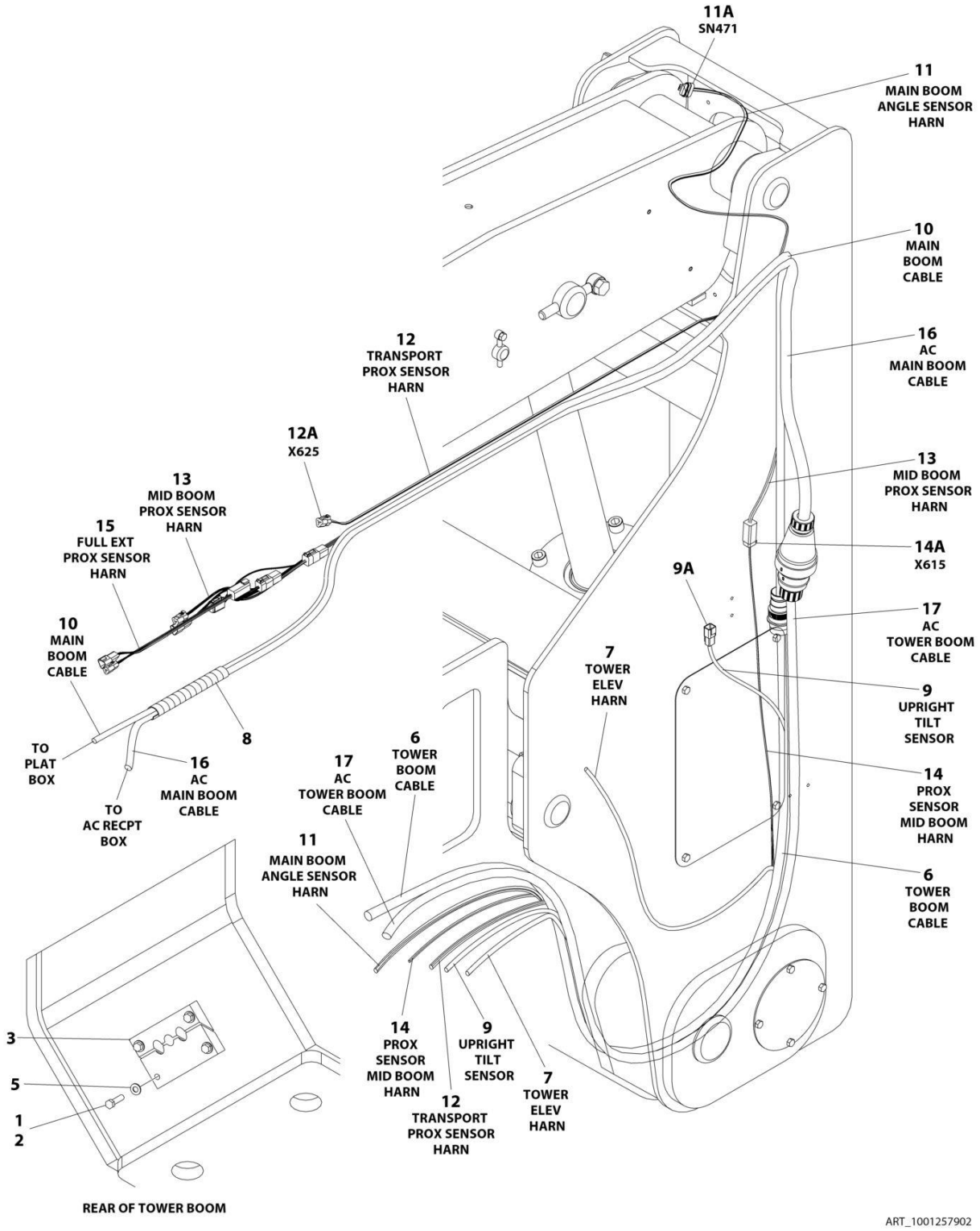

FIGURE 8-23. BOOM CABLES INSTALLATION - WITH 2500W GENERATOR

ITEM	PART NUMBER	QTY	DESCRIPTION	REV
	1001257902	Ref	BOOM CABLES INSTALLATION	A
1	0100011	AR	Compound, Locking	
2	0641612	4	Bolt 3/8 x 1-1/2	
3	1320256	1	Clamp, Block	
4	4240033	3	Tie, Cable (Not Shown)	
5	4711600	4	Washer 3/8	
6	4922576	1	Boom Cable - Tower Boom (See Separate Breakdown in this Section)	
7	4922578	1	Harness, Tower Boom Elevation Limit Switch	
8	1001181923	1	Shield, Cable/Hose	
9	1001227359	1	Harness, Tilt Sensor Harness	
9	4460944	3	Socket, Female (at GC Box)	
9A	1001097051	1	Connector - 4 Position	
9A	1001097082	1	Terminal	
9A	4460518	1	Plug, Terminal	
10	1001227488	1	Boom Cable - Main Boom (See Separate Breakdown in this Section)	
11	1001258707	1	Harness, Main Boom Angle Sensor	
11A	1001230931	1	Connector - 6 Position	
11A	1001116748	6	Terminal	
12	1001258708	1	Harness, Transport Proximity Sensor	
12A	4460539	1	Plug, Male - 3 Position	
12A	4460465	3	Socket, Female	
13	1001258709	1	Harness, Mid Boom Proximity Sensor (Main Boom) (See Separate Breakdown in ths Section)	
14	1001258710	1	Cable, Middle Boom Proximity Sensor, Lower	
14A	4460894	1	Plug, Male - 6 Position	
14A	4460465	6	Socket, Female	
15	1001258711	1	Cable, Full Extension Proximity Sensor	
16	4922218	1	AC Cable, 10/3 (Main Boom)	
17	4922220	1	AC Cable, 10/3 (Tower Boom)	

FIGURE 8-24. BOOM CABLES INSTALLATION - WITH 4000W GENERATOR (50HZ)

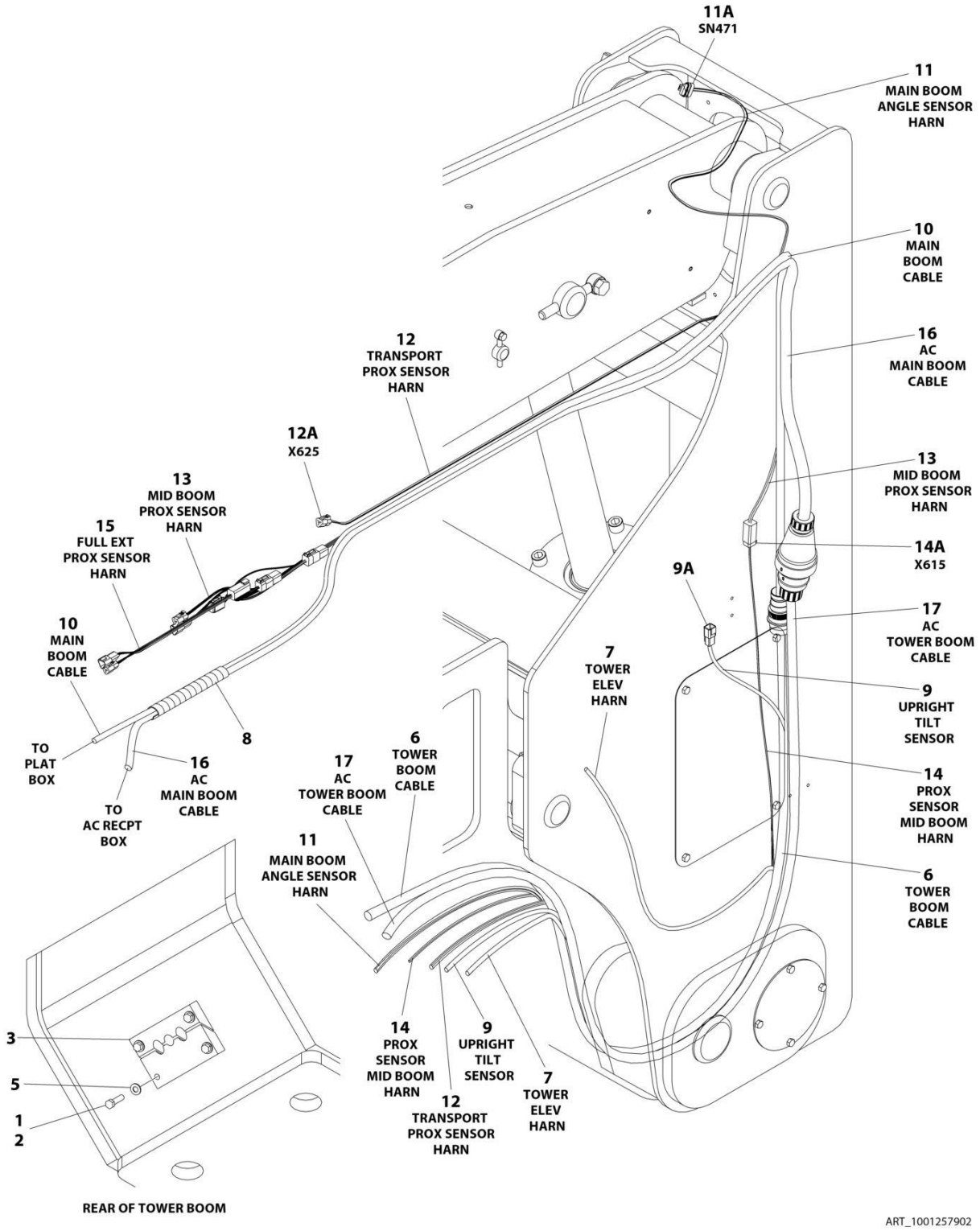

FIGURE 8-24. BOOM CABLES INSTALLATION - WITH 4000W GENERATOR (50HZ)

ITEM	PART NUMBER	QTY	DESCRIPTION	REV
	1001257902	Ref	BOOM CABLES INSTALLATION	A
1	0100011	AR	Compound, Locking	
2	0641612	4	Bolt 3/8 x 1-1/2	
3	1320256	1	Clamp, Block	
4	4240033	3	Tie, Cable (Not Shown)	
5	4711600	4	Washer 3/8	
6	4922576	1	Boom Cable - Tower Boom (See Separate Breakdown in this Section)	
7	4922578	1	Harness, Tower Boom Elevation Limit Switch	
8	1001181923	1	Shield, Cable/Hose	
9	1001227359	1	Harness, Tilt Sensor Harness	
9	4460944	3	Socket, Female (at GC Box)	
9A	1001097051	1	Connector - 4 Position	
9A	1001097082	1	Terminal	
9A	4460518	1	Plug, Terminal	
10	1001227488	1	Boom Cable - Main Boom (See Separate Breakdown in this Section)	
11	1001258707	1	Harness, Main Boom Angle Sensor	
11A	1001230931	1	Connector - 6 Position	
11A	1001116748	6	Terminal	
12	1001258708	1	Harness, Transport Proximity Sensor	
12A	4460539	1	Plug, Male - 3 Position	
12A	4460465	3	Socket, Female	
13	1001258709	1	Harness, Mid Boom Proximity Sensor (Main Boom) (See Separate Breakdown in ths Section)	
14	1001258710	1	Cable, Middle Boom Proximity Sensor, Lower	
14A	4460894	1	Plug, Male - 6 Position	
14A	4460465	6	Socket, Female	
15	1001258711	1	Cable, Full Extension Proximity Sensor	
16	4922218	1	AC Cable, 10/3 (Main Boom)	
17	4922220	1	AC Cable, 10/3 (Tower Boom)	

FIGURE 8-25. BOOM CABLES INSTALLATION - WITH 4000W GENERATOR (60HZ)

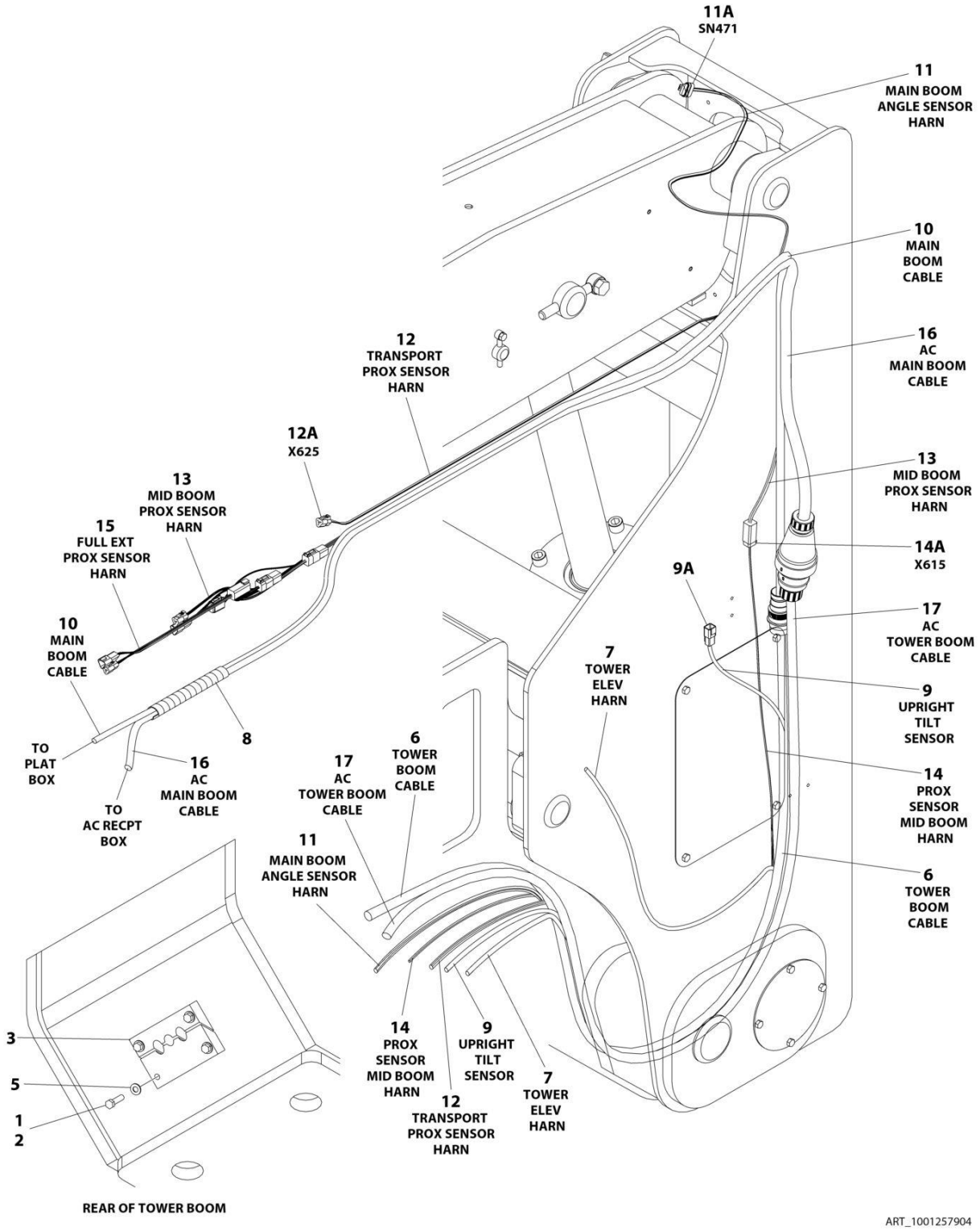

FIGURE 8-25. BOOM CABLES INSTALLATION - WITH 4000W GENERATOR (60HZ)

ITEM	PART NUMBER	QTY	DESCRIPTION	REV
	1001257904	Ref	BOOM CABLES INSTALLATION	A
1	0100011	AR	Compound, Locking	
2	0641612	4	Bolt 3/8 x 1-1/2	
3	1320256	1	Clamp, Block	
4	4240033	3	Tie, Cable (Not Shown)	
5	4711600	4	Washer 3/8	
6	4922576	1	Boom Cable - Tower Boom (See Separate Breakdown in this Section)	
7	4922578	1	Harness, Tower Boom Elevation Limit Switch	
8	1001181923	1	Shield, Cable/Hose	
9	1001227359	1	Harness, Tilt Sensor Harness	
9	4460944	3	Socket, Female (at GC Box)	
9A	1001097051	1	Connector - 4 Position	
9A	1001097082	1	Terminal	
9A	4460518	1	Plug, Terminal	
10	1001227488	1	Boom Cable - Main Boom (See Separate Breakdown in this Section)	
11	1001258707	1	Harness, Main Boom Angle Sensor	
11A	1001230931	1	Connector - 6 Position	
11A	1001116748	6	Terminal	
12	1001258708	1	Harness, Transport Proximity Sensor	
12A	4460539	1	Plug, Male - 3 Position	
12A	4460465	3	Socket, Female	
13	1001258709	1	Harness, Mid Boom Proximity Sensor (Main Boom) (See Separate Breakdown in ths Section)	
14	1001258710	1	Cable, Middle Boom Proximity Sensor, Lower	
14A	4460894	1	Plug, Male - 6 Position	
14A	4460465	6	Socket, Female	
15	1001258711	1	Cable, Full Extension Proximity Sensor	
16	1001156695	1	AC Cable, 10/4 (Main Boom)	
17	1001156693	1	AC Cable, 10/4 (Tower Boom)	

FIGURE 8-26. BOOM CABLES INSTALLATION - WITH 7500W SKYPOWER GENERATOR

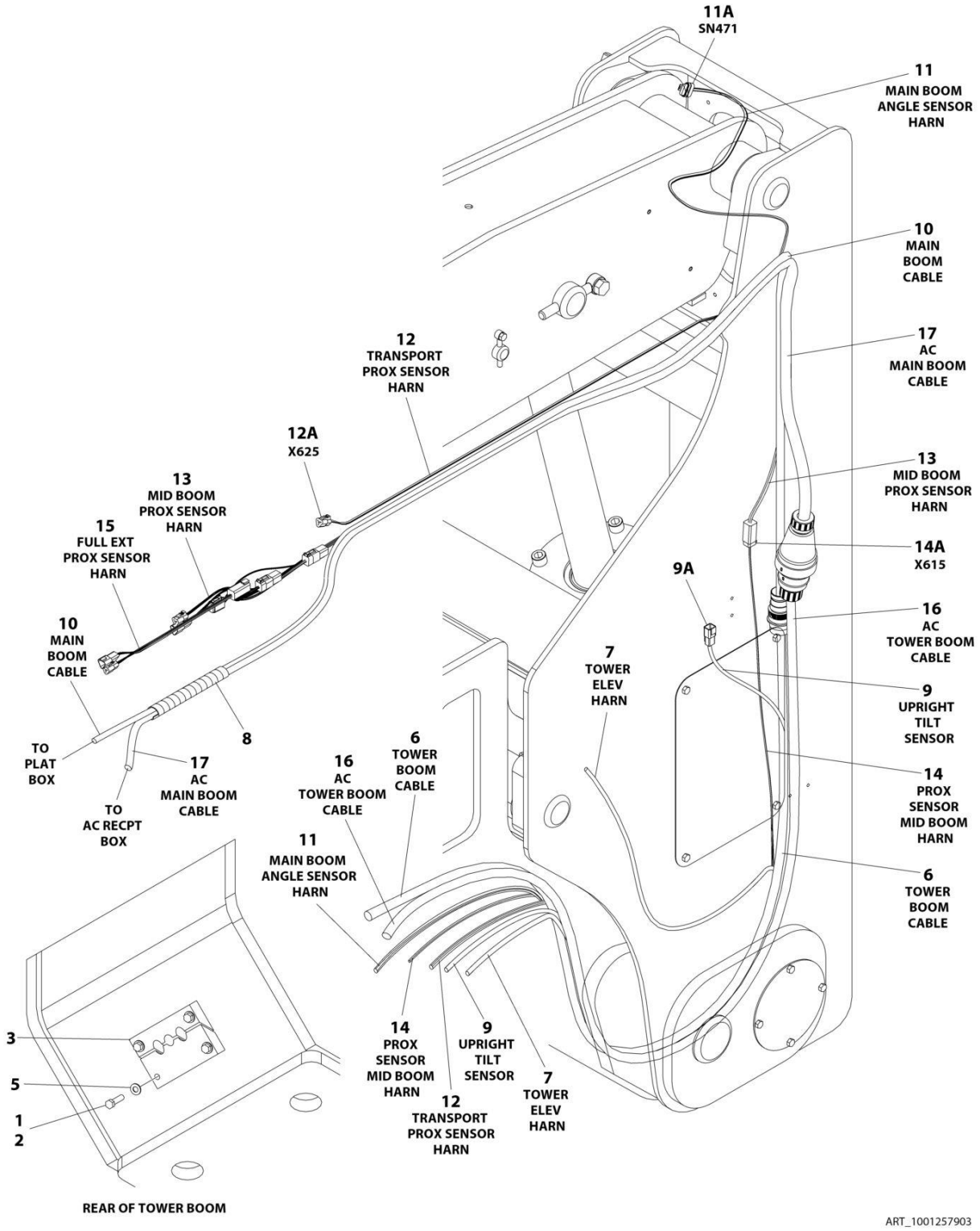

FIGURE 8-26. BOOM CABLES INSTALLATION - WITH 7500W SKYPOWER GENERATOR

ITEM	PART NUMBER	QTY	DESCRIPTION	REV
	1001257903	Ref	BOOM CABLES INSTALLATION	A
1	0100011	AR	Compound, Locking	
2	0641612	4	Bolt 3/8 x 1-1/2	
3	1320256	1	Clamp, Block	
4	4240033	3	Tie, Cable (Not Shown)	
5	4711600	4	Washer 3/8	
6	4922576	1	Boom Cable - Tower Boom (See Separate Breakdown in this Section)	
7	4922578	1	Harness, Tower Boom Elevation Limit Switch	
8	1001181923	1	Shield, Cable/Hose	
9	1001227359	1	Harness, Tilt Sensor Harness	
9	4460944	3	Socket, Female (at GC Box)	
9A	1001097051	1	Connector - 4 Position	
9A	1001097082	1	Terminal	
9A	4460518	1	Plug, Terminal	
10	1001227488	1	Boom Cable - Main Boom (See Separate Breakdown in this Section)	
11	1001258707	1	Harness, Main Boom Angle Sensor	
11A	1001230931	1	Connector - 6 Position	
11A	1001116748	6	Terminal	
12	1001258708	1	Harness, Transport Proximity Sensor	
12A	4460539	1	Plug, Male - 3 Position	
12A	4460465	3	Socket, Female	
13	1001258709	1	Harness, Mid Boom Proximity Sensor (Main Boom) (See Separate Breakdown in ths Section)	
14	1001258710	1	Cable, Middle Boom Proximity Sensor, Lower	
14A	4460894	1	Plug, Male - 6 Position	
14A	4460465	6	Socket, Female	
15	1001258711	1	Cable, Full Extension Proximity Sensor	
16	1001125125	1	AC Cable, 8/5 (Tower Boom)	
17	1001125127	1	AC Cable, 8/5 (Main Boom)	

FIGURE 8-27. BOOM CABLE - MAIN BOOM

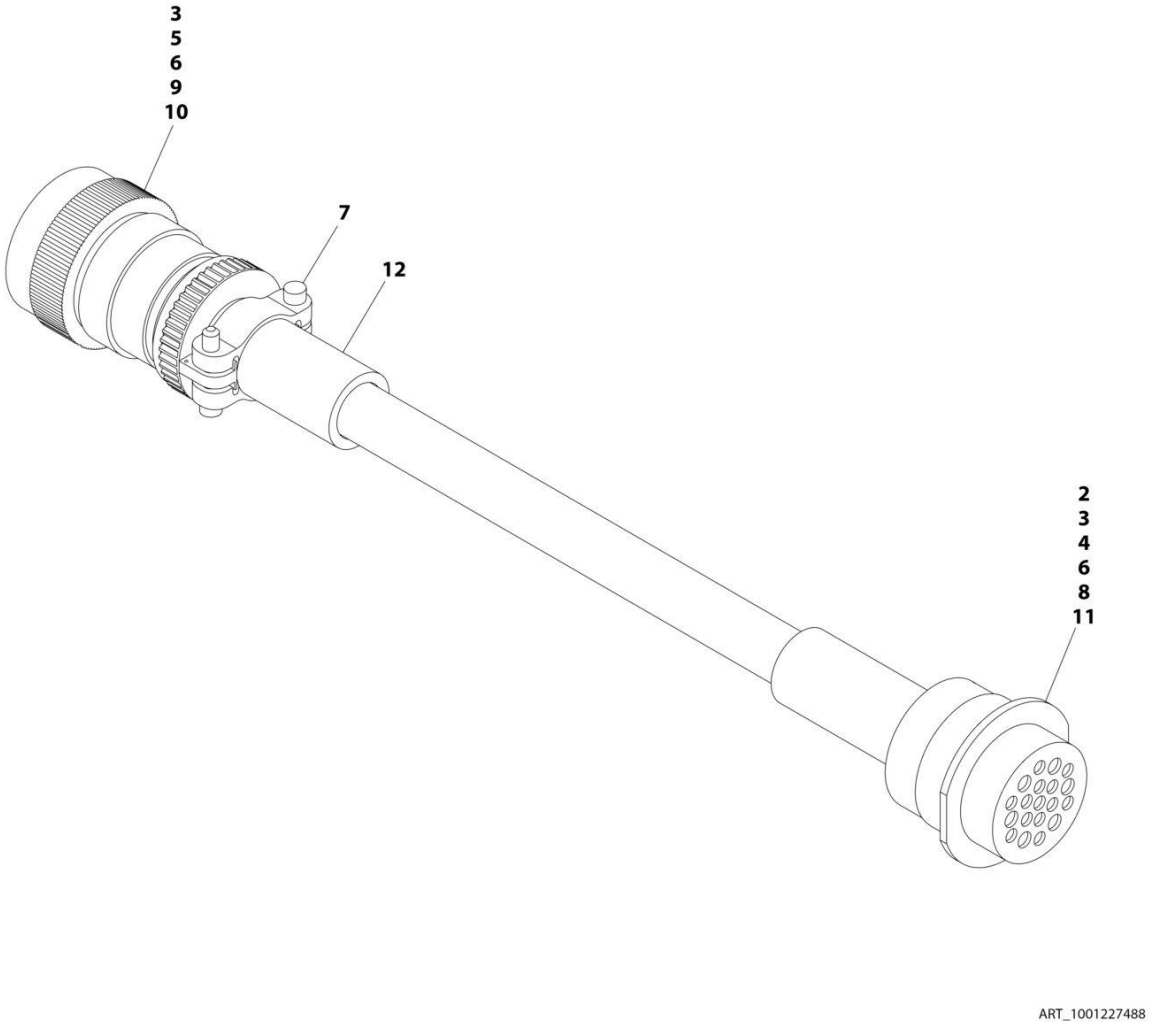

FIGURE 8-27. BOOM CABLE - MAIN BOOM

ITEM	PART NUMBER	QTY	DESCRIPTION	REV
	1001227488	Ref	BOOM CABLE - MAIN BOOM	A
2	2820031	AR	Heatshrink	
3	2820118	AR	Heatshrink, Clear	
4	4460464	8	Pin, Male	
5	4460465	11	Socket, Female	
6	4460466	11	Plug, Terminal	
7	4460473	1	Clamp	
8	4460508	4	Pin, Male	
9	4460509	4	Socket, Female	
10	4460865	1	Connector - 19 Position	
11	4460866	1	Connector - 19 Position	
12	1001226400	1	Insulate, Heatshrink	

FIGURE 8-28. BOOM CABLE (TOWER BOOM)

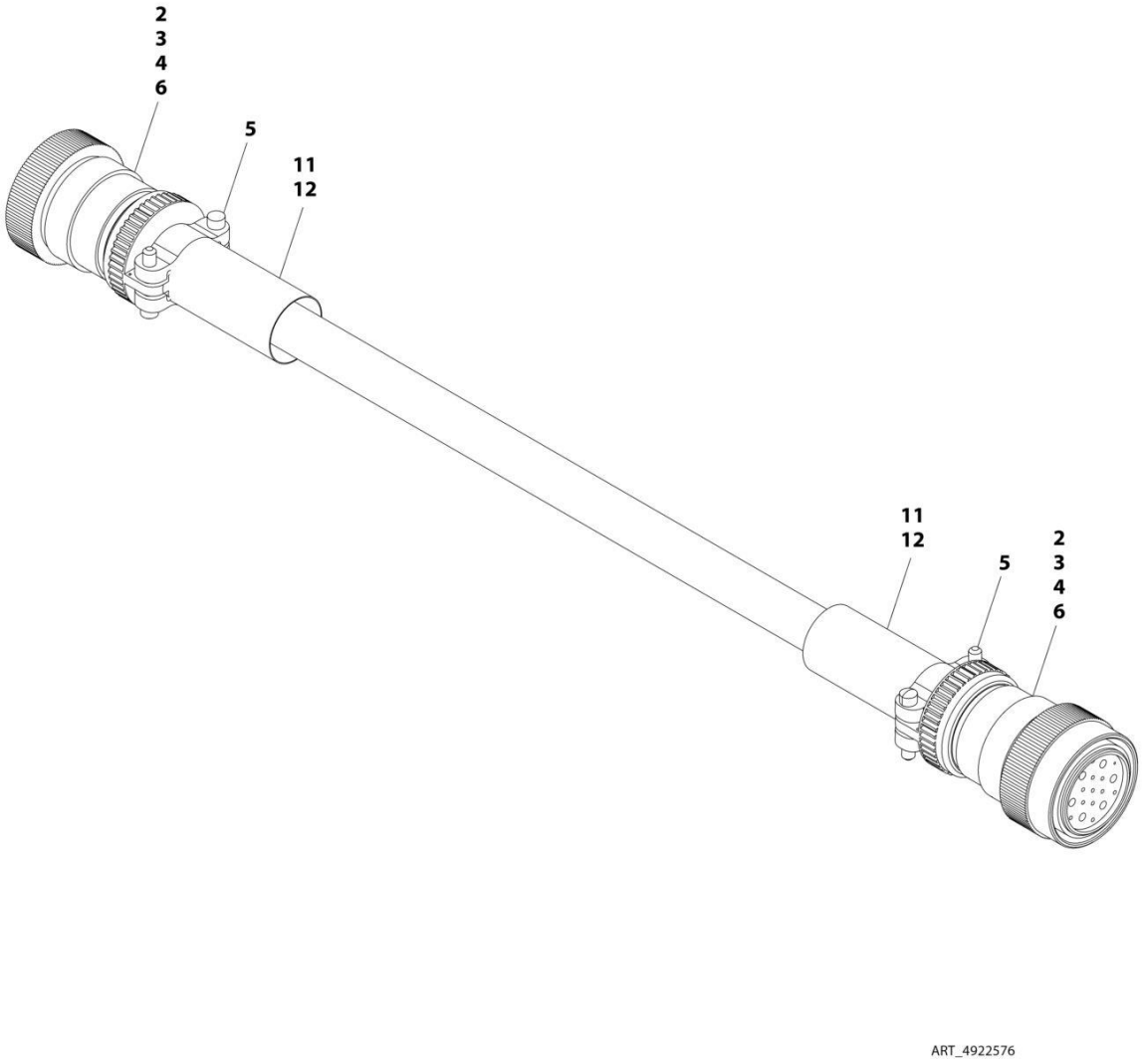

FIGURE 8-28. BOOM CABLE (TOWER BOOM)

ITEM	PART NUMBER	QTY	DESCRIPTION	REV
	4922576	Ref	BOOM CABLE - TOWER BOOM	E
2	4460465	22	Socket, Female	
3	4460865	2	Connector - 19 Position	
4	4460509	8	Socket, Female	
5	4460473	2	Clamp	
6	4460466	8	Plug, Terminal	
11	2820118	AR	Heatshrink, Clear	
12	1001226400	AR	Insulate, Heatshrink	

FIGURE 8-29. BOOM VALVE HARNESS

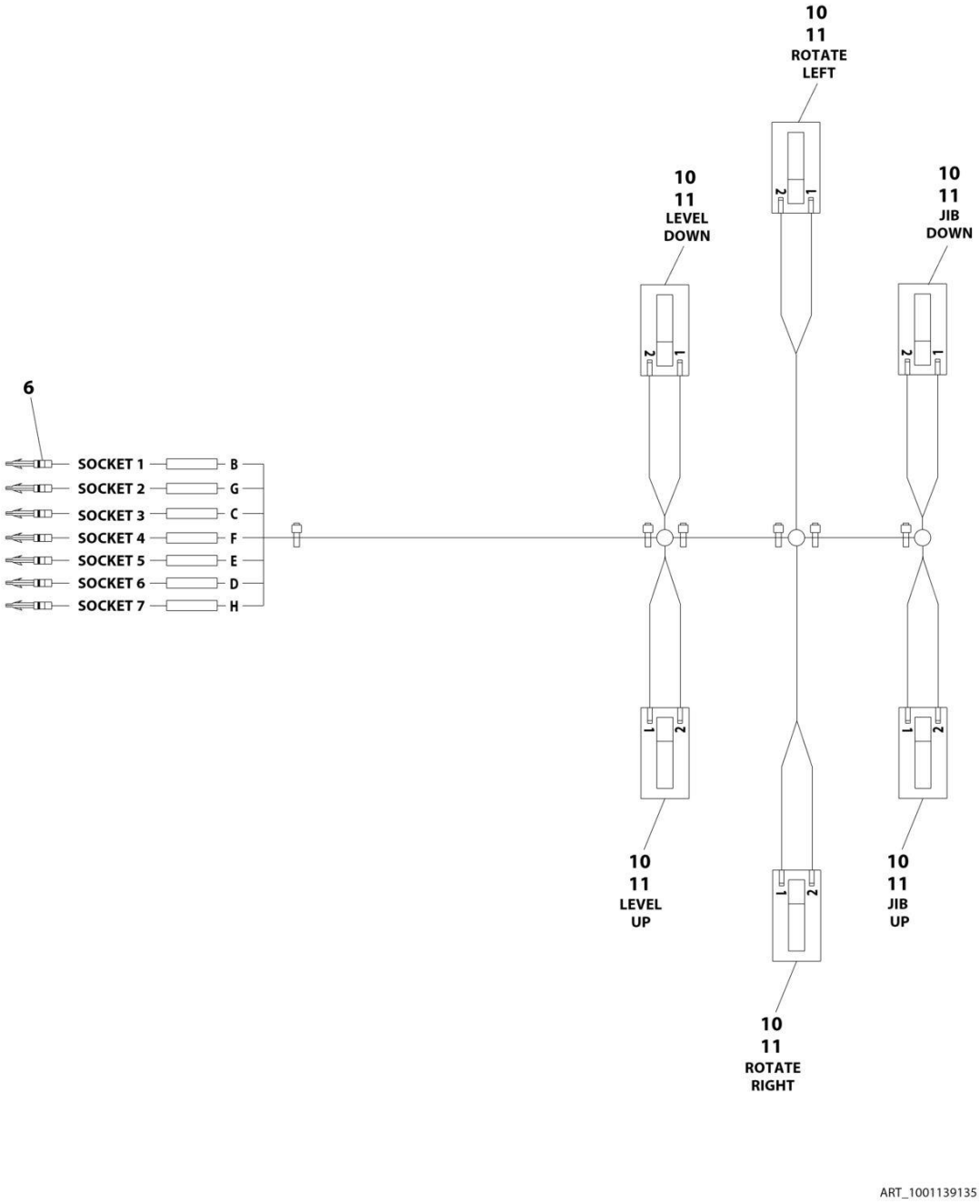

FIGURE 8-29. BOOM VALVE HARNESS

ITEM	PART NUMBER	QTY	DESCRIPTION	REV
	1001139135	Ref	BOOM VALVE HARNESS	3
6	4460226	7	Terminal, Socket	
10	4460891	6	Deutsch connector	
11	1001116692	12	Socket	

FIGURE 8-30. BREAKER BOX INSTALLATION (BRAZIL SPECS)

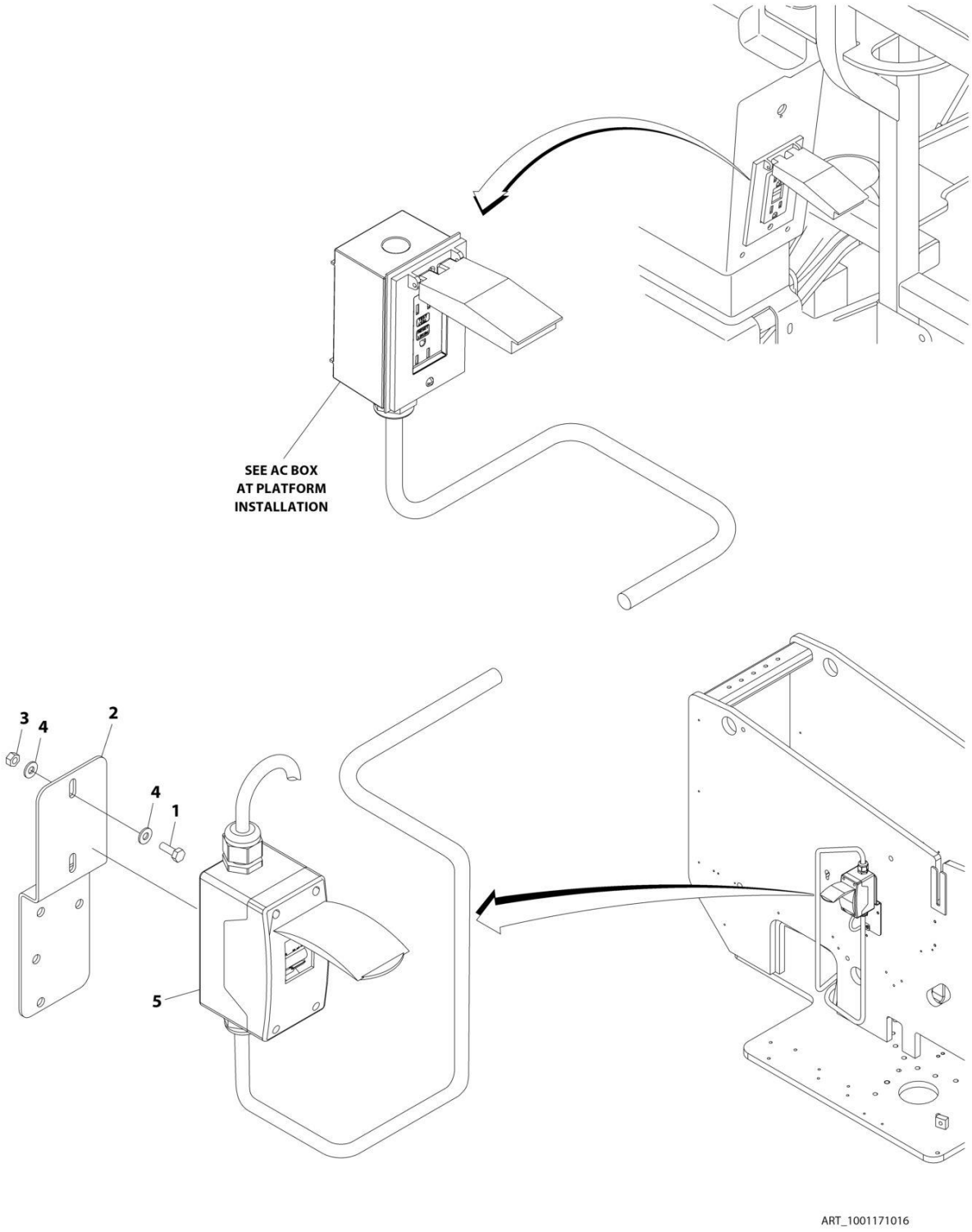

FIGURE 8-30. BREAKER BOX INSTALLATION (BRAZIL SPECS)

ITEM	PART NUMBER	QTY	DESCRIPTION	REV
	1001171016	Ref	AC BREAKER BOX INSTALLATION	A
1	0641406	2	Bolt 1/4 x 3/4	
2	0903697	1	Bracket	
3	3311405	2	Nut 1/4	
4	4711400	4	Washer 1/4	
5	1001109654	1	Breaker Box Kit - With 2 Breakers (See Separate Breakdown in this Section)	

FIGURE 8-31. BREAKER BOX INSTALLATION (CE & UK CA SPECS WITHOUT 4000W GENERATOR)

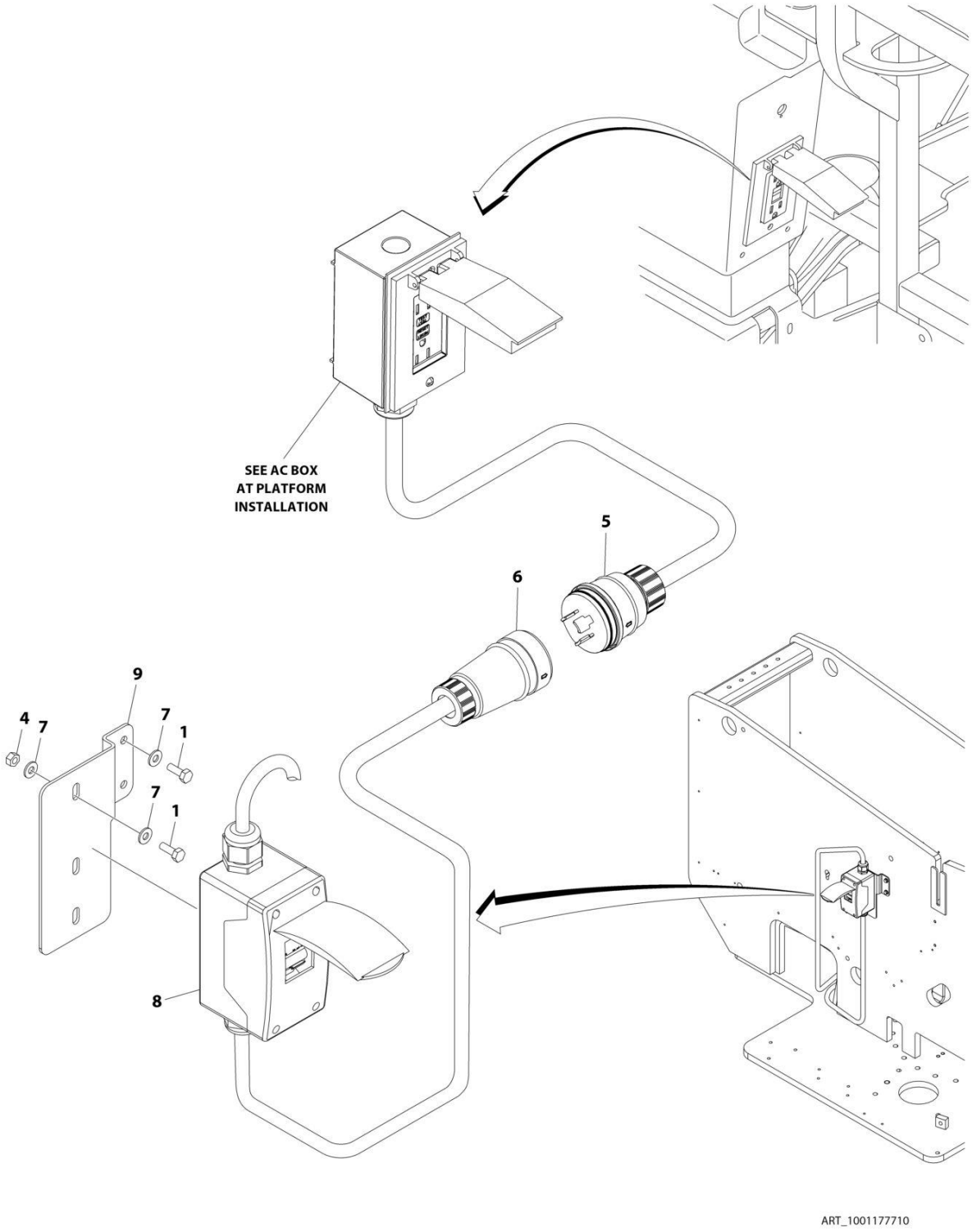

FIGURE 8-31. BREAKER BOX INSTALLATION (CE & UK CA SPECS WITHOUT 4000W GENERATOR)

ITEM	PART NUMBER	QTY	DESCRIPTION	REV
	1001177710	Ref	AC BREAKER BOX INSTALLATION	C
1	0641406	4	Bolt 1/4 x 3/4	
4	3311405	2	Nut 1/4	
5	1001213584	1	Plug, Male	
6	1001213585	1	Receptacle, Female	
7	4711400	6	Washer 1/4	
8	1001109654	1	Breaker Box Kit - With 2 Breakers (See Separate Breakdown in this Section)	
9	1001177035	1	Bracket	

FIGURE 8-32. BREAKER BOX KIT - ONE DOUBLE 16AMP BREAKER (BRAZIL, CE & UK CA SPECS WITHOUT 4000W GENERATOR)

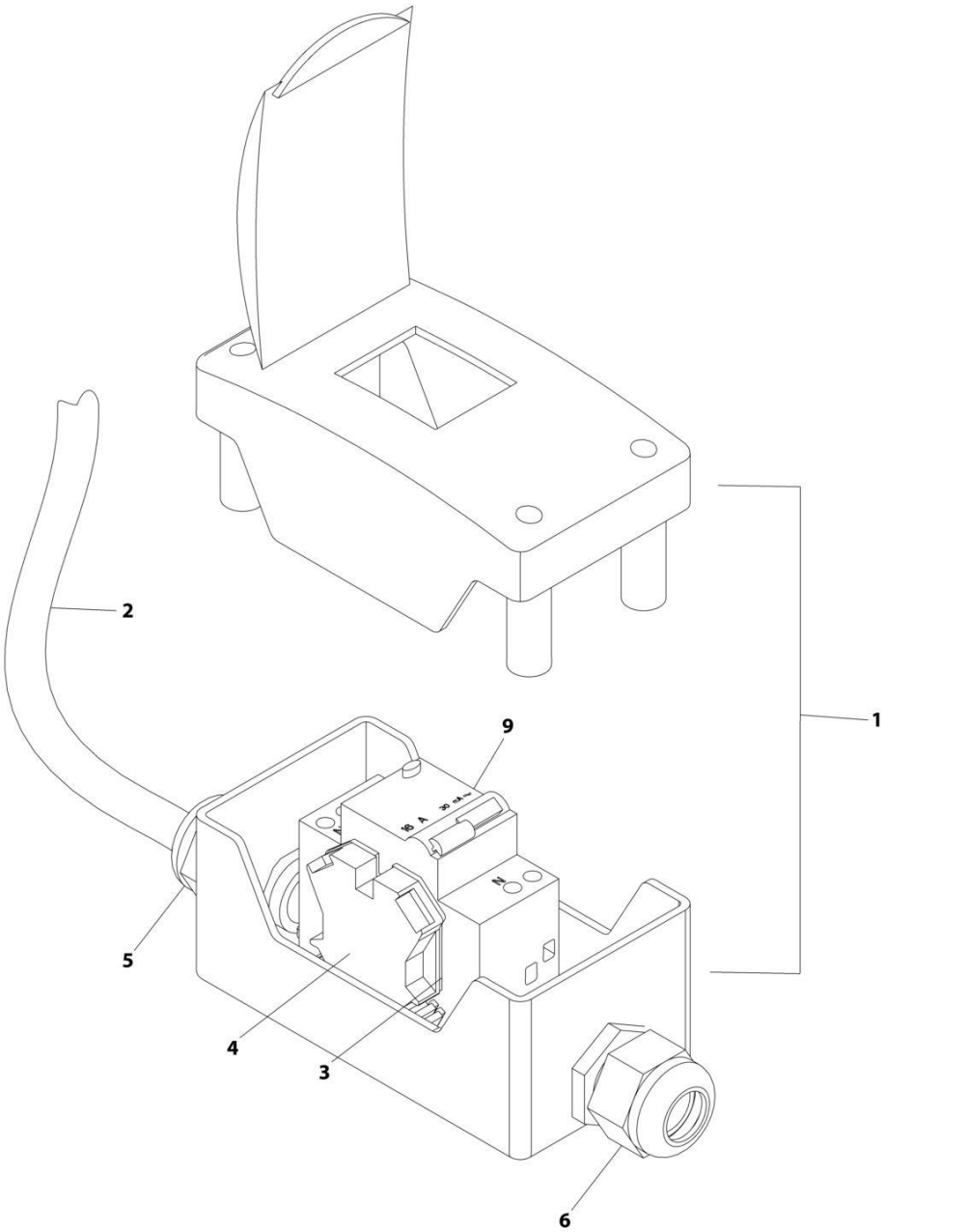

FIGURE 8-32. BREAKER BOX KIT - ONE DOUBLE 16AMP BREAKER (BRAZIL, CE & UK CA SPECS WITHOUT 4000W GENERATOR)

ITEM	PART NUMBER	QTY	DESCRIPTION	REV
	1001109654	Ref	BREAKER BOX KIT	B
1	0861880	1	Box, Breaker	
2	1060908	12 ft/ 3.6m	Cable 12/3	
3	4460956	1	Barrier, Terminal Block End	
4	4460957	1	Block, Terminal	
5	1001097150	1	Connector, Strain Relief	
6	1001101191	1	Connector, Strain Relief	
9	1001181045	1	Breaker - 30mA/16Amp	

FIGURE 8-33. BREAKER BOX KIT - WITH 3 BREAKERS (CE & UK CA SPECS WITH 4000W GENERATOR)

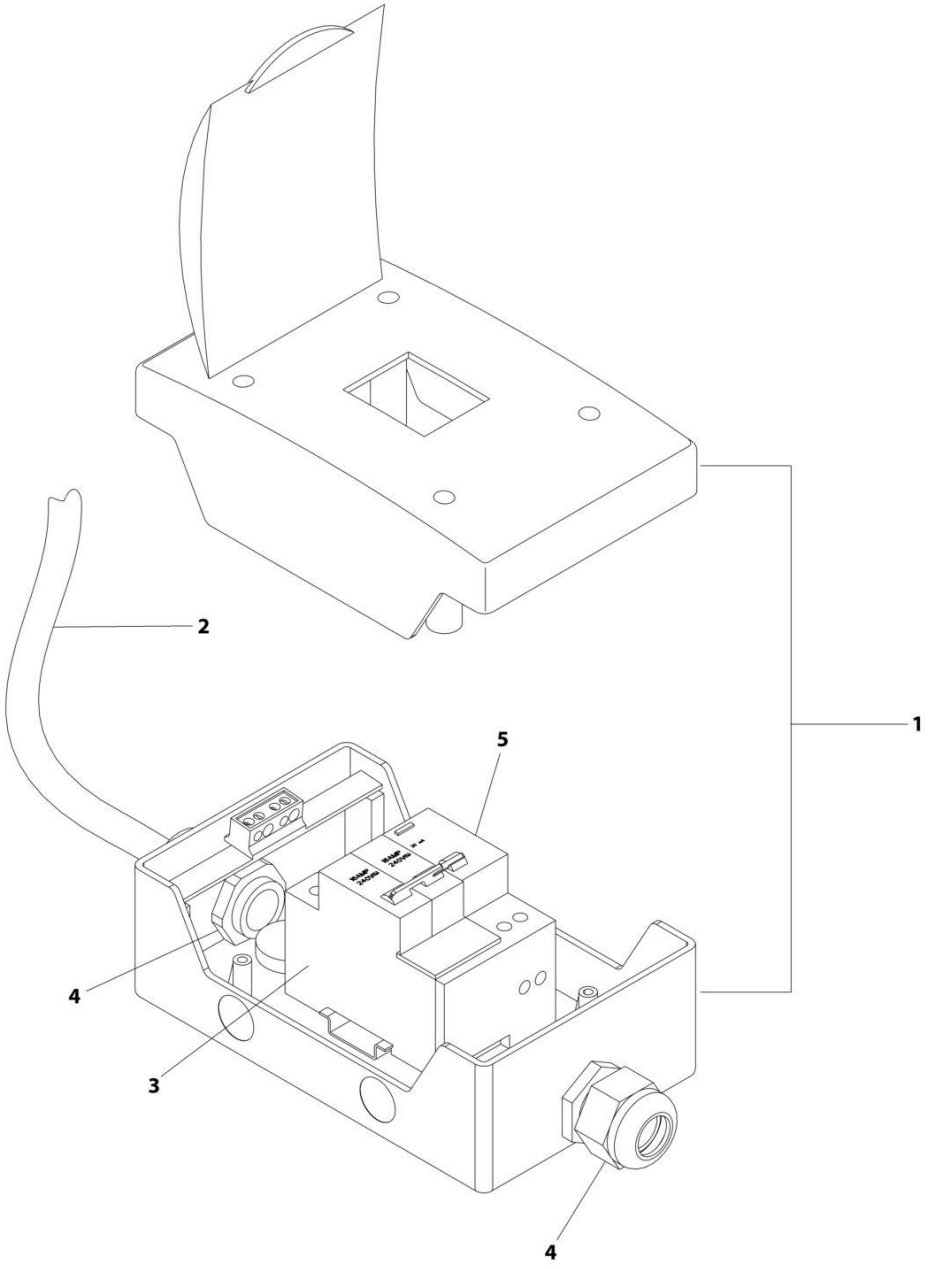

ART_1001205690

FIGURE 8-33. BREAKER BOX KIT - WITH 3 BREAKERS (CE & UK CA SPECS WITH 4000W GENERATOR)

ITEM	PART NUMBER	QTY	DESCRIPTION	REV
	1001205690	Ref	BREAKER BOX KIT	B
1	1001152483	1	Box, Breaker	
2	1060545	12 ft / 3.6m	Cable, Electrical 10/3	
3	1001189172	1	Breaker 16Amp Double	
4	1001101191	2	Connector, Strain Relief	
5	1001189171	1	Breaker 30mA	

FIGURE 8-34. BREAKER BOX KIT - ONE DOUBLE 16AMP BREAKER (CE & UK CA SPECS WITH 4000W GENERATOR)

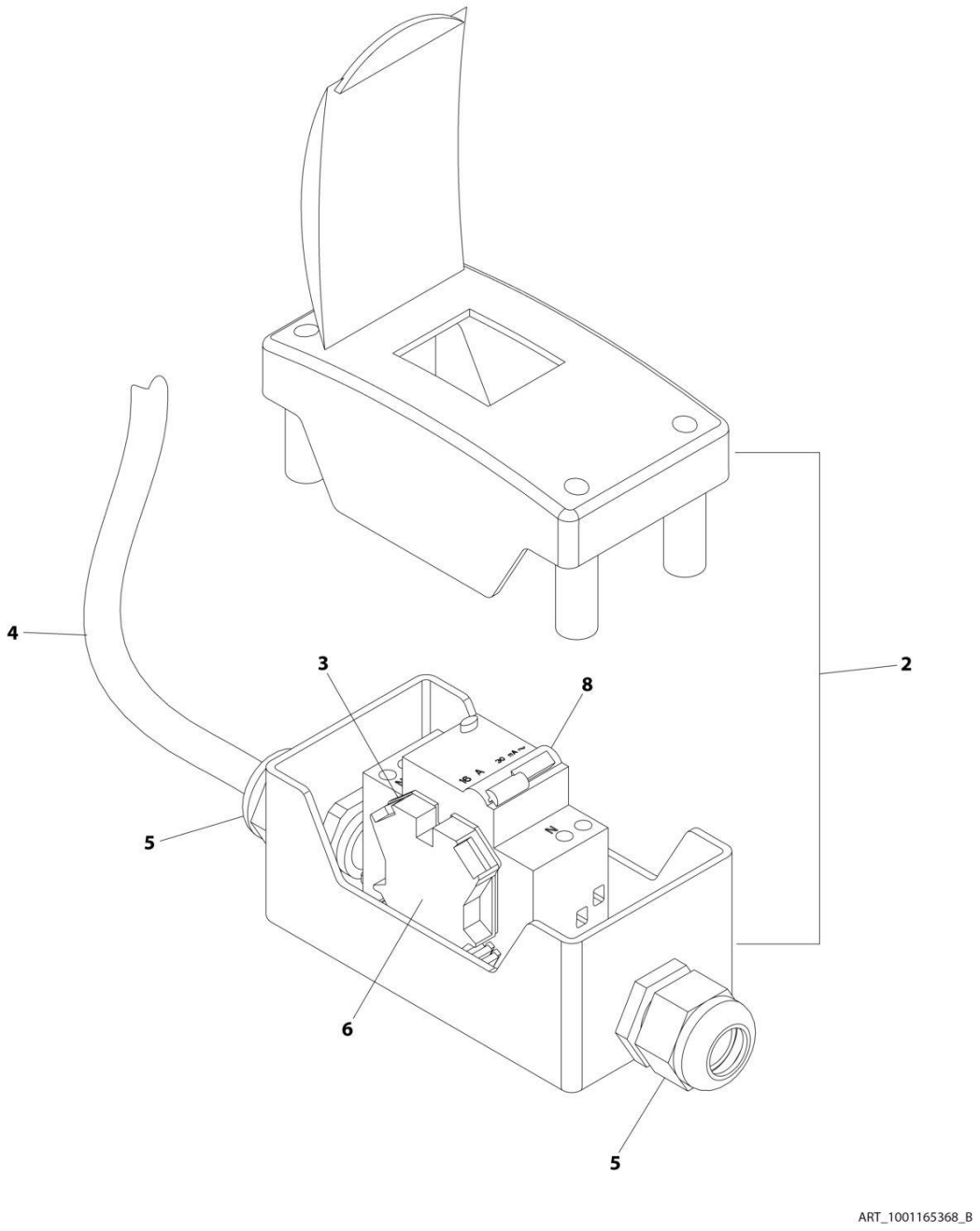

FIGURE 8-34. BREAKER BOX KIT - ONE DOUBLE 16AMP BREAKER (CE & UK CA SPECS WITH 4000W GENERATOR)

ITEM	PART NUMBER	QTY	DESCRIPTION	REV
	1001165368	Ref	BREAKER BOX KIT	B
2	0861880	1	Box, Circuit Breaker	
3	4460956	1	Barrier, Terminal Block End	
4	1060545	12 ft/ 3.6m	Cable, Electrical 10/3	
5	1001101191	2	Connector, Strain Relief	
6	4460957	1	Block, Terminal	
8	1001181045	1	Breaker 30mA/16Amp	

FIGURE 8-35. ENGINE HARNESS - DEUTZ D2011 ENGINES

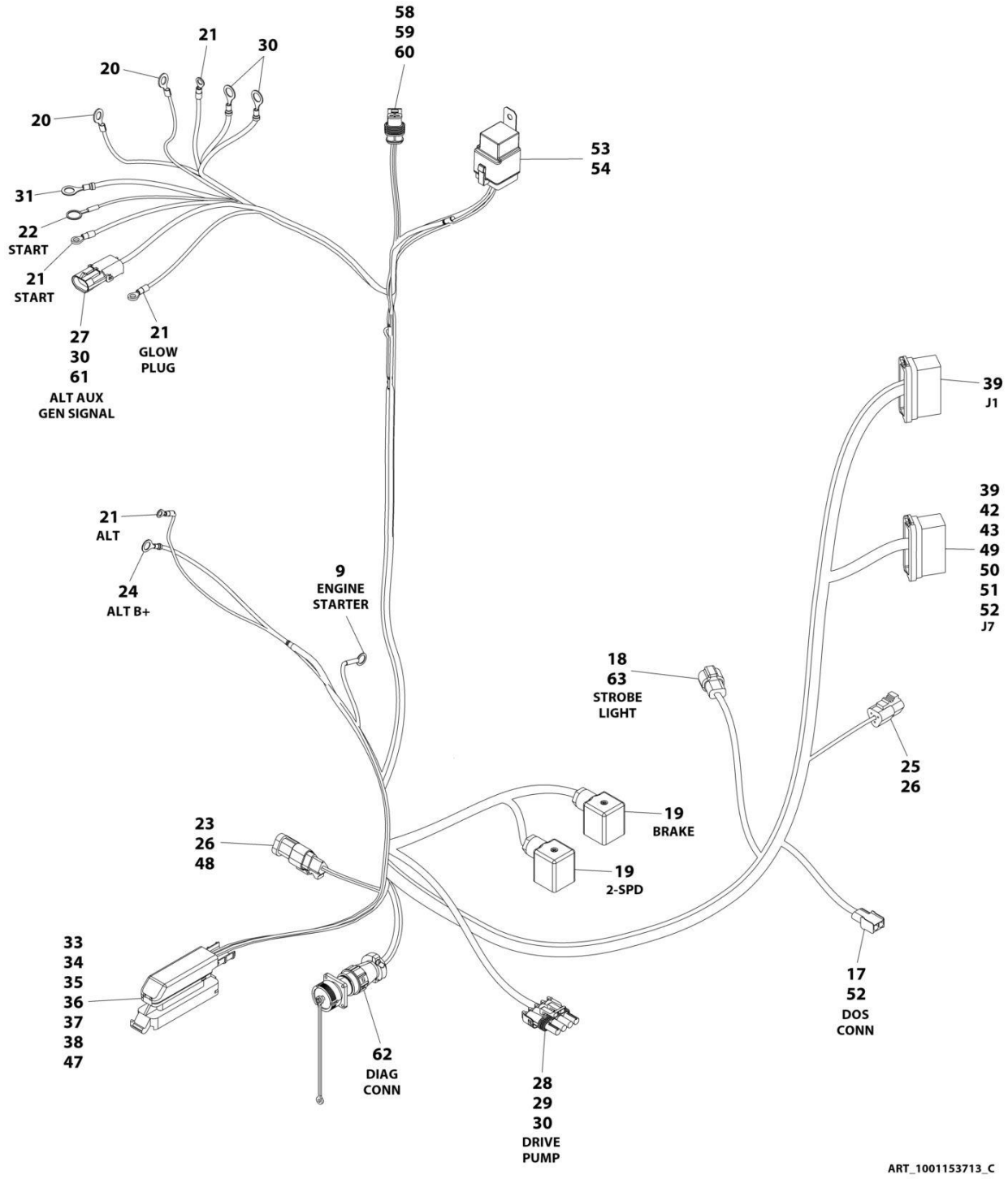

FIGURE 8-35. ENGINE HARNESS - DEUTZ D2011 ENGINES

ITEM	PART NUMBER	QTY	DESCRIPTION	REV
	1001153713	Ref	ENGINE HARNESS - DEUTZ D2011 ENGINES	C
9	4460142	1	Terminal - Ring	
17	4460424	1	Connector - 2 Position	
18	4460464	2	Pin, Male	
19	1001263923	2	Connector, Din	
20	4460312	2	Terminal, Ring	
21	4460313	4	Terminal, Ring	
22	4460019	1	Terminal, Ring	
23	4461070	1	Connector - 3 Position	
24	4460043	1	Terminal, Ring 16 GA 1/4 Stud	
25	4460539	1	Position Plug, Male - 3 Position	
26	4460944	6	Socket, Female	
27	4460979	2	Pin, Male	
28	4460460	1	Connector	
29	4460457	4	Sleeve	
30	4460458	6	Seal	
31	4460670	3	Terminal, Ring	
33	4461052	1	Conenctor - 25 Position	
34	4461005	5	Terminal	
35	4461060	2	Terminal	
36	4461006	5	Seal	
37	4461054	2	Seal	
38	4461008	18	Plug, Terminal	
39	4460871	10	Socket, Female	
42	4460464	1	Terminal	
43	4460887	1	Terminal	
47	4461053	1	Cover	
48	4461095	1	Plug, Male - 3 Position	
49	4460465	2	Socket, Female	
50	4460259	1	Terminal	
51	4460260	1	Cover, Terminal	
52	4460226	4	Socket, Female	
53	4460374	1	Plug	
54	4460375	4	Terminal	
58	1001102290	1	Connector	
59	1001102304	2	Seal	
60	1001102291	2	Terminal	
61	4461157	1	Connector - 2 Position	
62	2902443	1	Kit, Receptacle	
62	4461073	1	Cap, Dust	
63	4460897	1	Connector	

FIGURE 8-36. ENGINE HARNESS - DEUTZ TD2.9L4 ENGINES

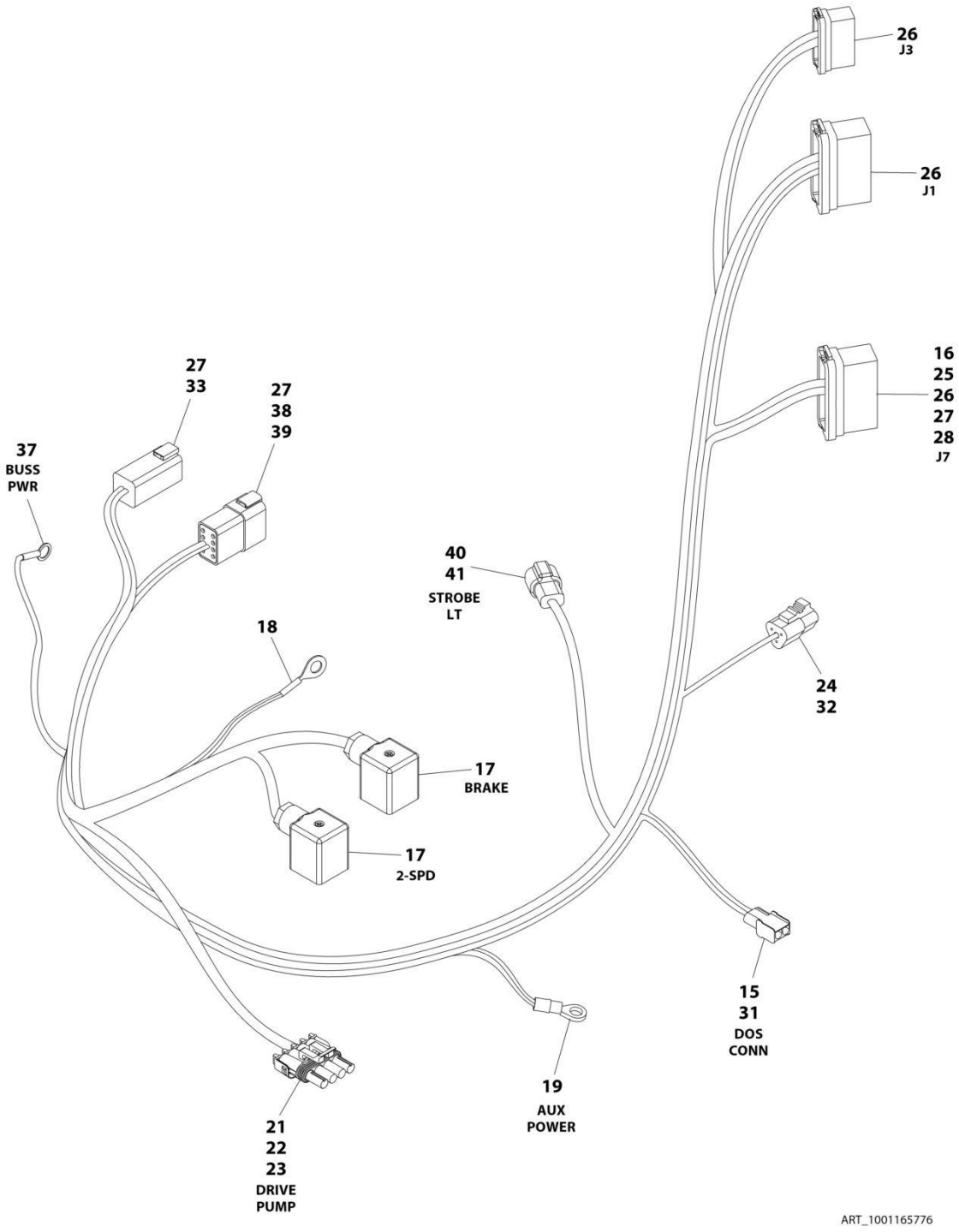

FIGURE 8-36. ENGINE HARNESS - DEUTZ TD2.9L4 ENGINES

ITEM	PART NUMBER	QTY	DESCRIPTION	REV
	1001165776	Ref	ENGINE HARNESS - DEUTZ TD2.9L4 ENGINES	F
15	4460424	1	Connector - 2 Position	
16	4460268	1	Socket, Female	
17	4460880	2	Connector, Din	
18	4460019	1	Terminal, Ring	
19	4460313	1	Terminal, Ring	
21	4460460	1	Connector	
22	4460457	4	Terminal	
23	4460458	4	Seal	
24	4460539	1	Connector - 3 Position	
25	4460465	3	Socket, Female	
26	4460871	11	Socket, Female	
27	4460464	11	Pin, Male	
28	4460887	1	Terminal	
31	4460226	2	Socket, Female	
32	4460944	3	Socket, Female	
33	4460899	1	Receptacle, Female - 6 Position	
37	4460738	1	Terminal, Ring	
38	4460931	1	Plug, Male	
39	4460466	4	Plug, Terminal	
40	4460897	1	Connector - 2 Position	
41	1001116693	2	Terminal	

FIGURE 8-37. ENGINE HARNESS - DEUTZ TD2.9L4 ENGINES AND DEUTZ TD2.9L4 (STAGE V PRE-BUY) ENGINES

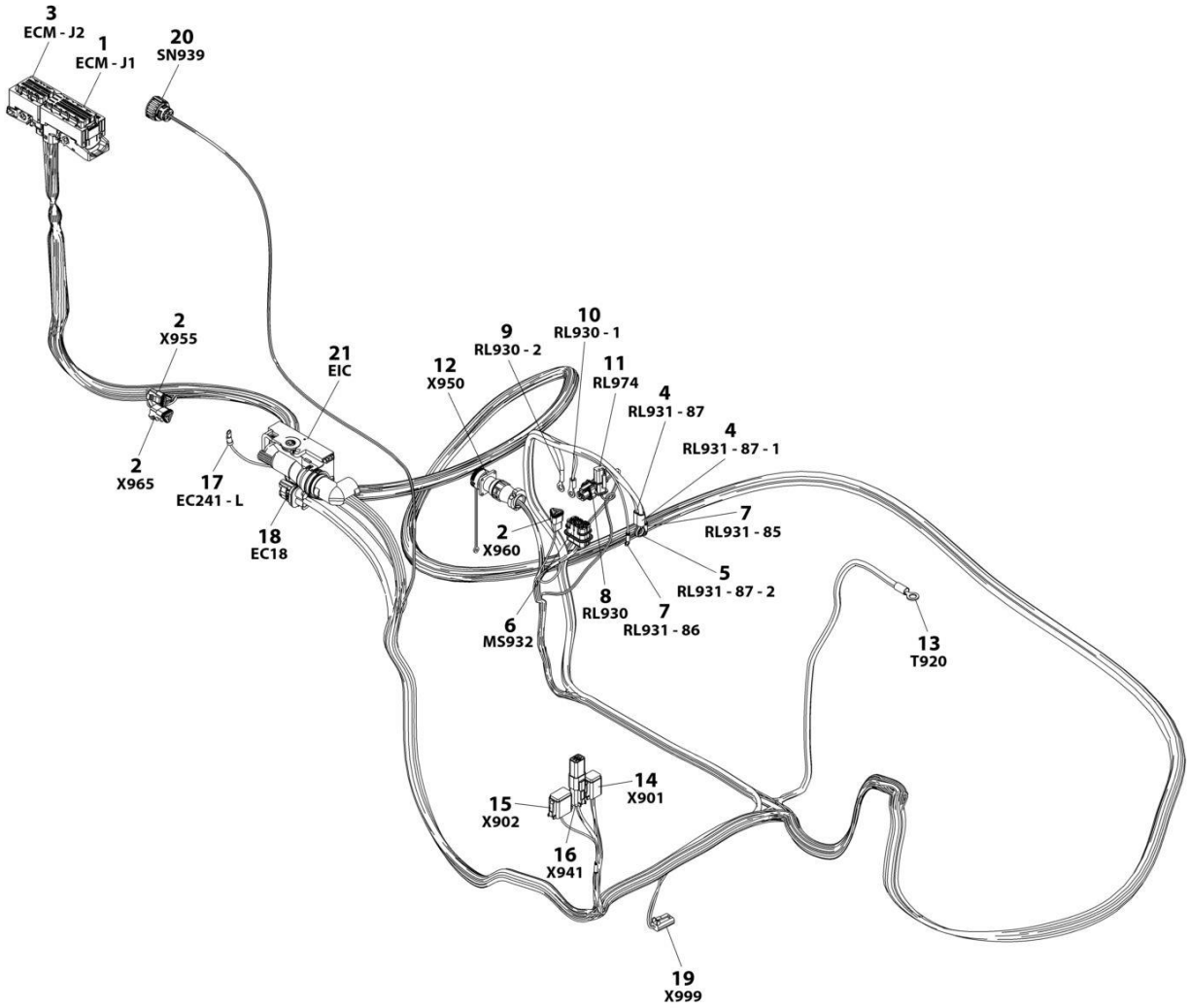

ART_1001143726

FIGURE 8-37. ENGINE HARNESS - DEUTZ TD2.9L4 ENGINES AND DEUTZ TD2.9L4 (STAGE V PRE-BUY) ENGINES

ITEM	PART NUMBER	QTY	DESCRIPTION	REV
	1001143726	Ref	ENGINE HARNESS	L
1	1001133956	1	Connector - 94 Position	
1	1001126351	2	Terminal	
1	1001126352	6	Terminal	
1	1001126384	21	Terminal	
1	1001126357	2	Plug, Terminal	
1	1001126356	63	Plug, Terminal	
2	4461095	3	Plug, Male - 3 Position	
2	4460944	6	Socket, Female	
2	4460466	3	Plug, Terminal	
3	1001133957	1	Connector - 60 Position	
3	1001126351	13	Terminal	
3	1001126384	17	Terminal	
3	1001126357	11	Plug, Terminal	
3	1001126356	19	Plug, Terminal	
4	1001117107	2	Terminal, Ring	
5	4460703	1	Terminal, Ring	
6	80484084	1	Plug, Male - 8 Position	
6	8229242	1	Fuse - 5Amp	
6	80983191	1	Fuse - 10Amp	
6	1001116728	4	Socket, Female	
6	1001116727	4	Plug, Terminal	
6	4460458	4	Seal, Terminal	
6	1001147264	1	Cap	
7	4460247	2	Terminal, Ring	
8	1001116952	1	Plug, Male - 2 Position	
8	4460465	2	Socket, Female	
9	1001117106	1	Terminal, Ring	
10	4460043	1	Terminal, Ring	
11	1001138110	1	Connector - 2 Position	
11	1001138111	2	Termianl	
11	1001138113	2	Seal	
12	2902443	1	Receptacle Kit	
12	4461073	1	Cap, Dust	
12	4461071	6	Terminal	
13	8220115	1	Terminal, Ring	
14	4460894	1	Plug, Male - 6 Position	
14	4460465	3	Socket, Female	
14	4460944	2	Socket, Female	
14	4460466	1	Plug, Terminal	
15	4460930	1	Plug, Male - 8 Position	
15	4460465	1	Socket, Female	
15	4460466	7	Plug, Terminal	
16	1001220379	1	Plug, Male - 4 Position	
16	4460465	2	Socket, Female	
16	4460942	2	Socket, Female	
16	4460932	1	Receptacle, Bussbar - 4 Position	
17	4460042	1	Terminal, Ring	
18	1001142938	1	Plug, Male - 2 Position	

ITEM	PART NUMBER	QTY	DESCRIPTION	REV
18	1001142940	2	Terminal	
18	1001142941	2	Seal	
19	4460891	1	Plug, Male - 4 Position	
19	4460465	2	Socket, Female	
19	1001171403	1	Resistor Assembly	
19	4460897	1	Receptacle, Female - 4 Position	
20	1001133714	1	Connector - 4 Position	
20	1001133715	3	Terminal	
20	1001135650	3	Seal, Terminal	
20	1001135651	1	Plug, Terminal	
21	1001126362	1	Connector - 62 Position	
21	1001126363	23	Terminal	
21	1001126392	10	Terminal	
21	1001126365	2	Terminal	
21	1001126391	23	Plug, Terminal	
21	4461008	4	Plug, Terminal	
21	1001256506	2	Seal, Terminal	
21	1001126364	21	Seal, Terminal	
21	1001223459	10	Seal, Terminal	
21	4461008	4	Plug, Terminal	
21	1001151856	1	Elbow	

FIGURE 8-38. ENGINE HARNESS - DEUTZ TD2.9L4 (STAGE V) ENGINES

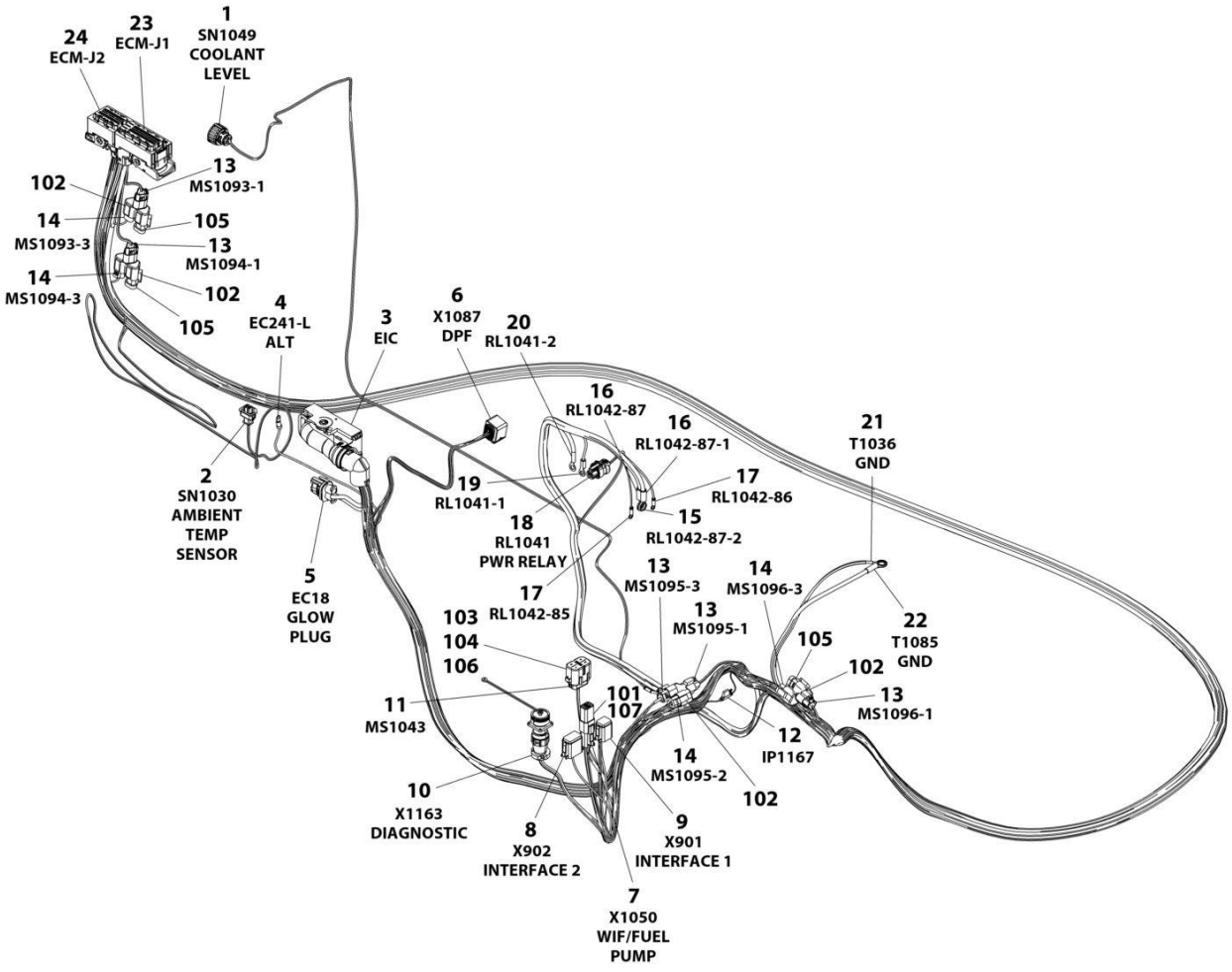

FIGURE 8-38. ENGINE HARNESS - DEUTZ TD2.9L4 (STAGE V) ENGINES

ITEM	PART NUMBER	QTY	DESCRIPTION	REV
	1001238878	Ref	Engine Harness - Deutz Engines	F
1	1001133714	1	Connector - 4 Position	
1	1001133715	3	Terminal	
1	1001135650	3	Seal, Terminal	
1	1001135651	1	Plug, Terminal	
2	1001126487	1	Connector - 2 Position	
2	1001167635	2	Terminal	
2	1001126485	2	Seal, Terminal	
3	1001126362	1	Connector - 62 Position	
3	1001126363	37	Terminal	
3	1001126392	12	Terminal	
3	1001126391	7	Plug, Terminal	
3	4461008	4	Plug, Terminal	
3	1001167632	2	Terminal	
3	1001126364	37	Seal, Terminal	
3	1001223459	12	Seal, Terminal	
3	4461054	2	Seal, Terminal	
4	4460042	1	Terminal, Ring	
5	1001142938	1	Plug, Male - 2 Position	
5	1001142940	2	Terminal	
5	1001142941	2	Seal	
6	1001239202	1	Connector - 8 Position	
6	1001126363	7	Terminal	
6	1001126391	1	Plug, Terminal	
6	1001126364	7	Seal, Terminal	
7	4460884	1	Connector - 4 Position	
7	4460465	2	Socket, Female	
7	4460942	2	Socket, Female	
8	4460930	1	Plug, Male - 8 Position	
8	4460465	1	Socket, Female	
8	4460466	7	Plug, Terminal	
9	4460894	1	Plug, Male - 6 Position	
9	4460465	2	Socket, Female	
9	4460944	2	Socket, Female	
9	4460466	2	Plug, Terminal	
10	2902443	1	Receptacle Kit	
10	4461073	1	Cap, Dust	
10	4461071	6	Terminal	
11	80484084	1	Plug, Male - 8 Position	
11	4460748	4	Seal, Terminal	
11	4460746	3	Terminal	
11	1001234800	1	Terminal	
11	4460458	4	Seal, Terminal	
12	1001170764	1	Fuse Holder, Includes Resistor	
12	1001197719	1	Resistor 0.5W	
13	1001116812	5	Plug, Male - 3 Position	
13	4460944	10	Socket, Female	
13	4460466	5	Plug, Terminal	
14	4460539	4	Connector - 3 Position	
14	4460944	8	Socket, Female	

ITEM	PART NUMBER	QTY	DESCRIPTION	REV
14	4460466	4	Plug, Terminal	
15	4460703	1	Terminal, Ring	
16	1001117107	2	Terminal, Ring	
17	4460247	2	Terminal, Ring	
18	1001116952	1	Plug, Male - 2 Position	
18	4460465	2	Socket, Female	
19	4460043	1	Terminal, Ring	
20	1001117106	1	Terminal, Ring	
21	4460019	1	Terminal, Ring	
22	8220164	1	Terminal, Ring	
23	1001133956	1	Connector - 94 Position	
23	1001126351	3	Terminal	
23	1001182361	6	Terminal	
23	1001230934	25	Terminal	
23	1001230935	55	Plug, Terminal	
23	1001252527	4	Terminal	
23	1001230936	1	Plug, Terminal	
23	1001182365	6	Seal, Terminal	
24	1001133957	1	Connector - 60 Position	
24	1001126351	13	Terminal	
24	1001230935	10	Plug, Terminal	
24	1001230934	26	Terminal	
24	1001230936	11	Plug, Terminal	
101	4460932	1	Connector - Female	
102	4460945	4	Receptacle, 3 Way	
103	8229242	1	Fuse - 5Amp	
104	80983191	1	Fuse - 10Amp	
105	1001116815	3	Connector	
106	1001147264	1	Cap	
107	4460466	4	Seal, Terminal	

FIGURE 8-39. ENGINE HARNESS - FORD ENGINES

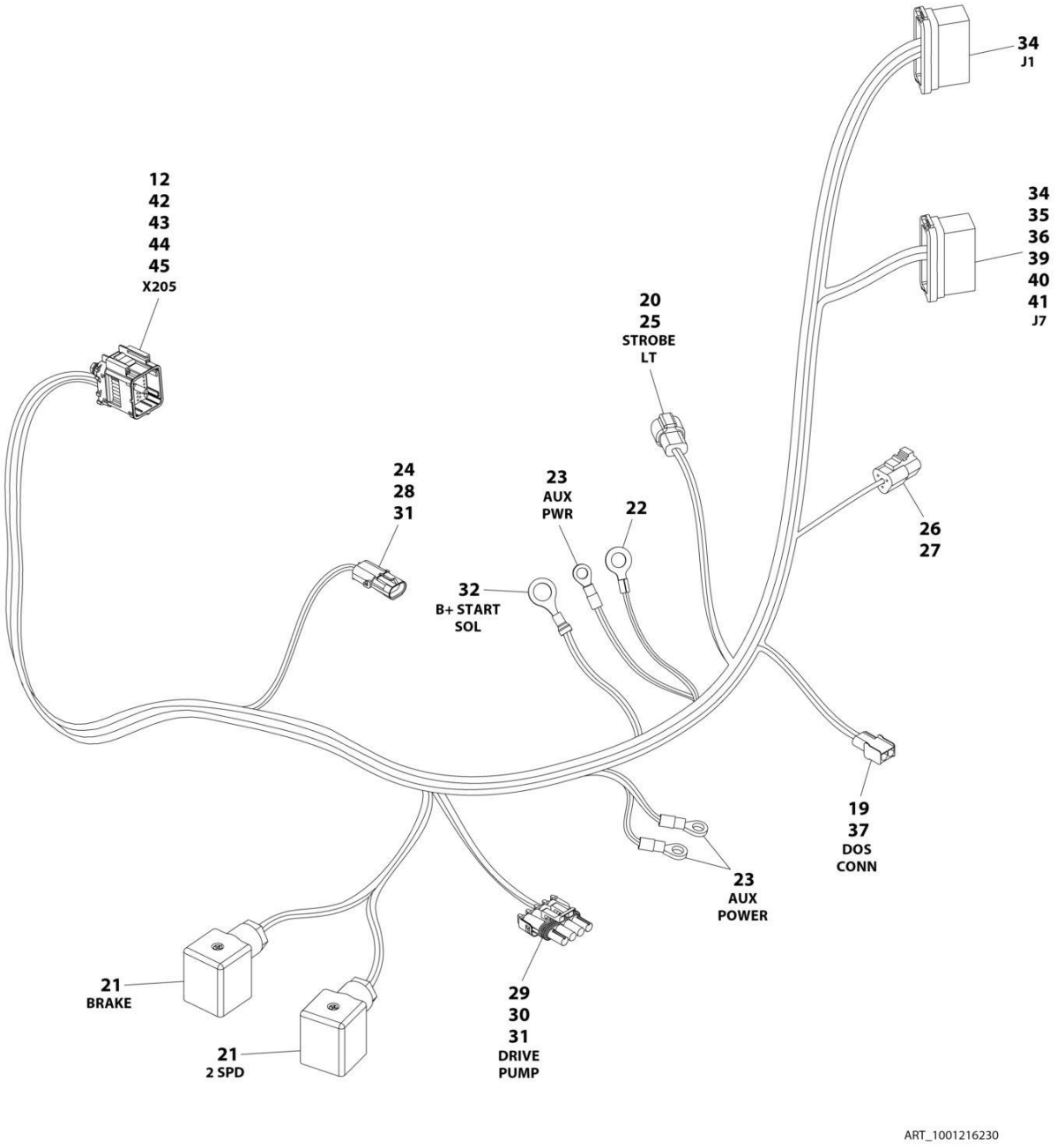

FIGURE 8-39. ENGINE HARNESS - FORD ENGINES

ITEM	PART NUMBER	QTY	DESCRIPTION	REV
	1001216230	Ref	ENGINE HARNESS - FORD ENGINES	C
12	1001216213	3	Terminal, Plug	
19	4460424	1	Connector - 2 Position	
20	1001116693	2	Terminal	
21	4460880	2	Connector, Din	
22	4460312	1	Terminal, Ring	
23	4460313	3	Terminal, Ring	
24	4460979	2	Terminal	
25	4460897	1	Receptacle, Female - 4 Position	
26	4460539	1	Plug, Male - 3 Position	
27	4460944	3	Socket, Female	
28	4461157	1	Connector - 2 Position	
29	4460460	1	Connector - 4 Position	
30	4460457	4	Sleeve	
31	4460458	6	Seal	
32	4460738	1	Terminal, Ring	
34	4460871	9	Socket	
35	4460464	1	Pin, Male	
36	4460887	1	Terminal	
37	4460226	3	Socket, Female	
39	4460465	2	Socket, Female	
40	4460259	1	Terminal	
41	4460260	1	Cover Terminal	
42	1001215016	NLA	Connector, Ford - 42 Position (Use p/n 1001265676)	
42	1001265676	1	Connector, Ford - 42 Position Kit	
43	1001215091	5	Terminal	
44	1001215534	33	Plug, Terminal	
45	1001216212	1	Terminal	

FIGURE 8-40. FUEL PUMP HARNESS - DEUTZ TD2.9L4 ENGINES

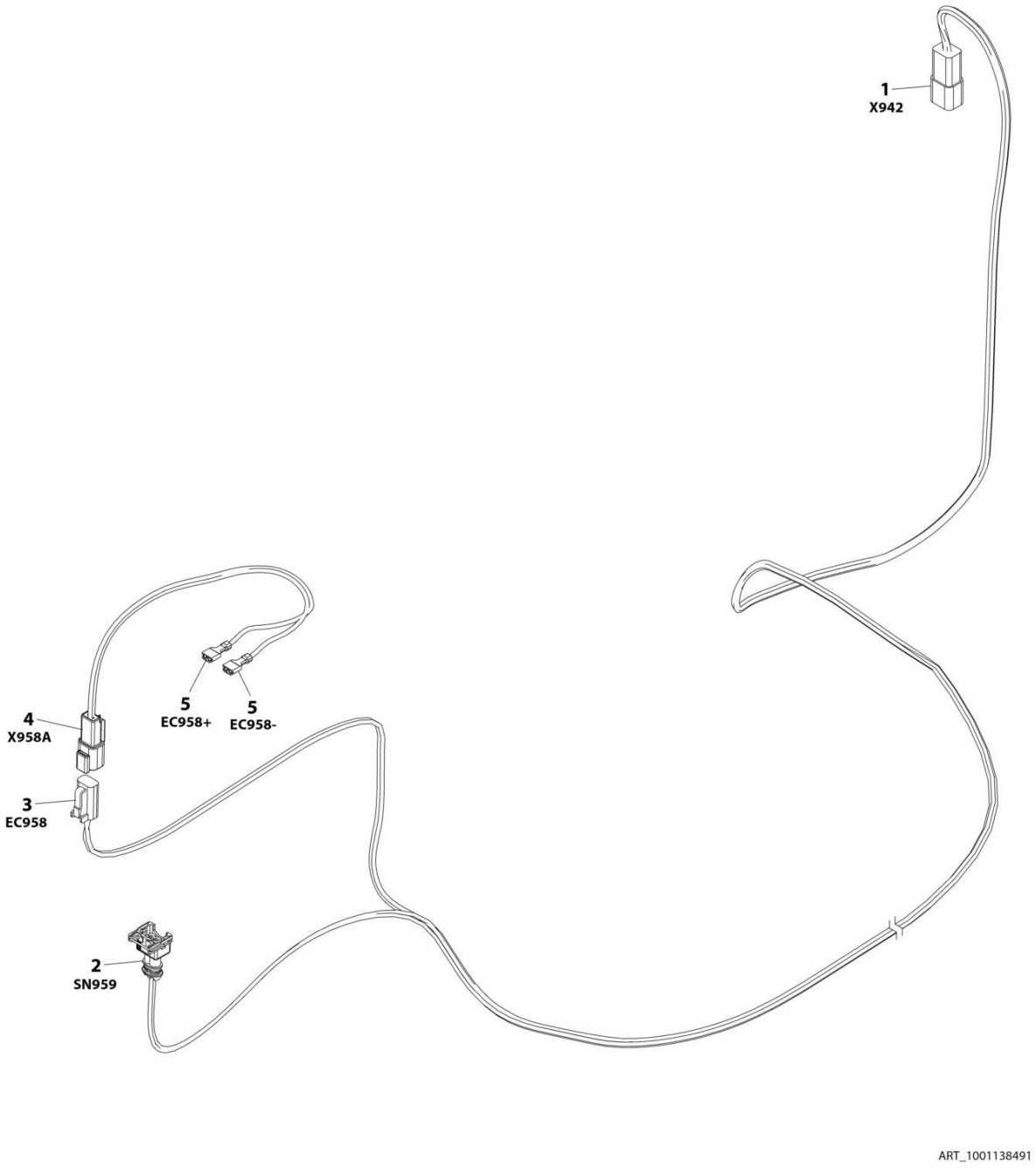

FIGURE 8-40. FUEL PUMP HARNESS - DEUTZ TD2.9L4 ENGINES

ITEM	PART NUMBER	QTY	DESCRIPTION	REV
	1001138491	Ref	FUEL PUMP HARNESS	D
1	4460932	1	Receptacle, Female - 4 Position	
1	4460941	2	Pin, Male	
1	4460464	2	Pin, Male	
2	1001116983	1	Plug, Male - 2 Position	
2	1001116710	2	Socket, Female	
2	4461054	2	Seal	
3	4460891	1	Plug, Male - 2 Position	
3	4460942	2	Socket, Female	
4	4460897	1	Connector - 2 Position	
4	4460941	2	Pin, Male	
5	8220051	2	Terminal, Ring	

FIGURE 8-41. FUEL HARNESS - DEUTZ TD2.9L4 (STAGE V) ENGINE

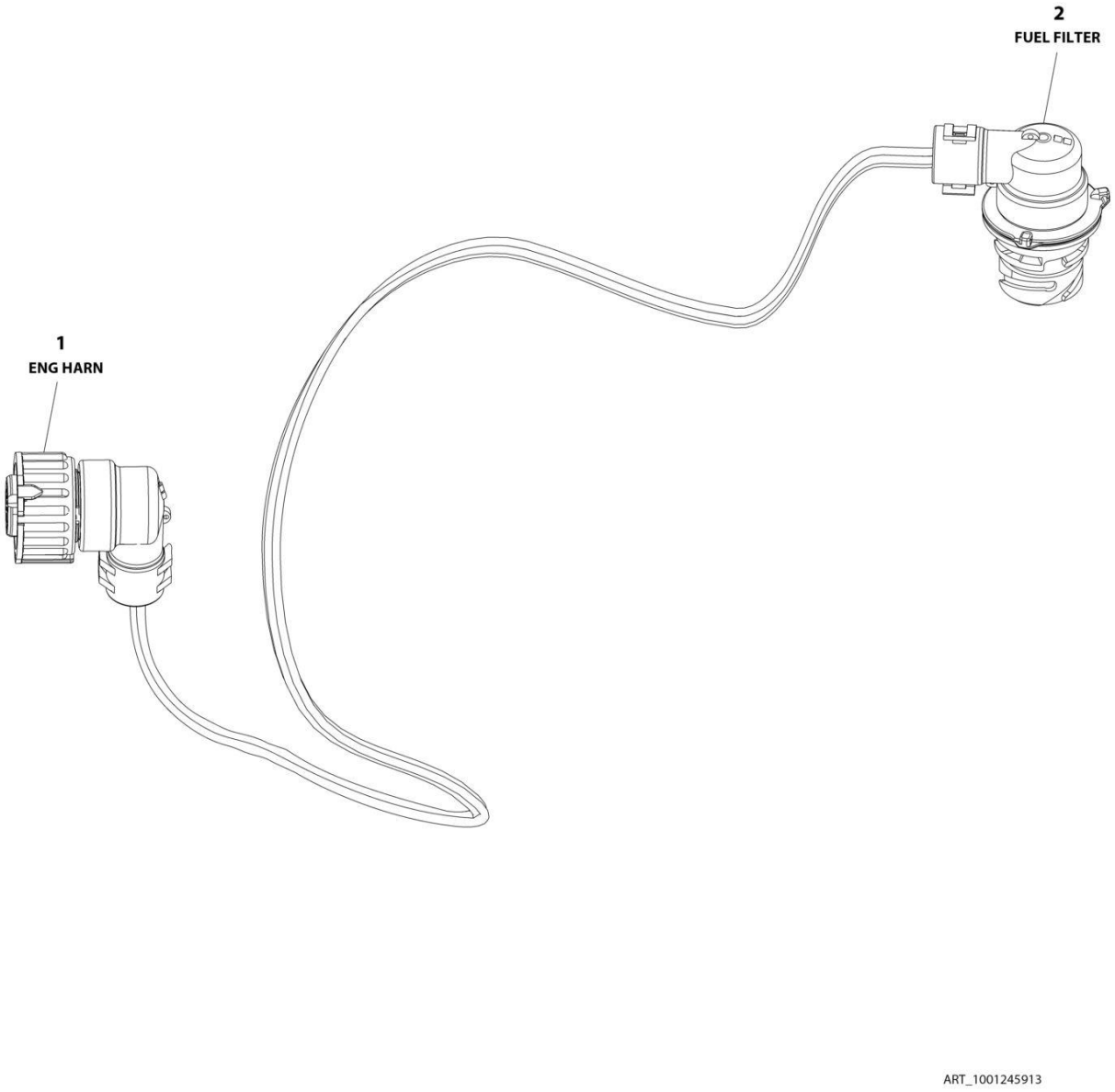

FIGURE 8-41. FUEL HARNESS - DEUTZ TD2.9L4 (STAGE V) ENGINE

ITEM	PART NUMBER	QTY	DESCRIPTION	REV
	1001245913	Ref	FUEL HARNESS - DEUTZ (STAGE V) ENGINE	D
1	1001148842	1	Connector - 4 Position	
1	1001148841	4	Pin, Male	
1	1001135650	4	Seal	
2	1001133714	1	Plug, Male - 4 Position	
2	1001133715	4	Socket, Female	
2	1001135650	4	Seal	

FIGURE 8-42. GENERATOR HARNESS - 4000W GENERATOR

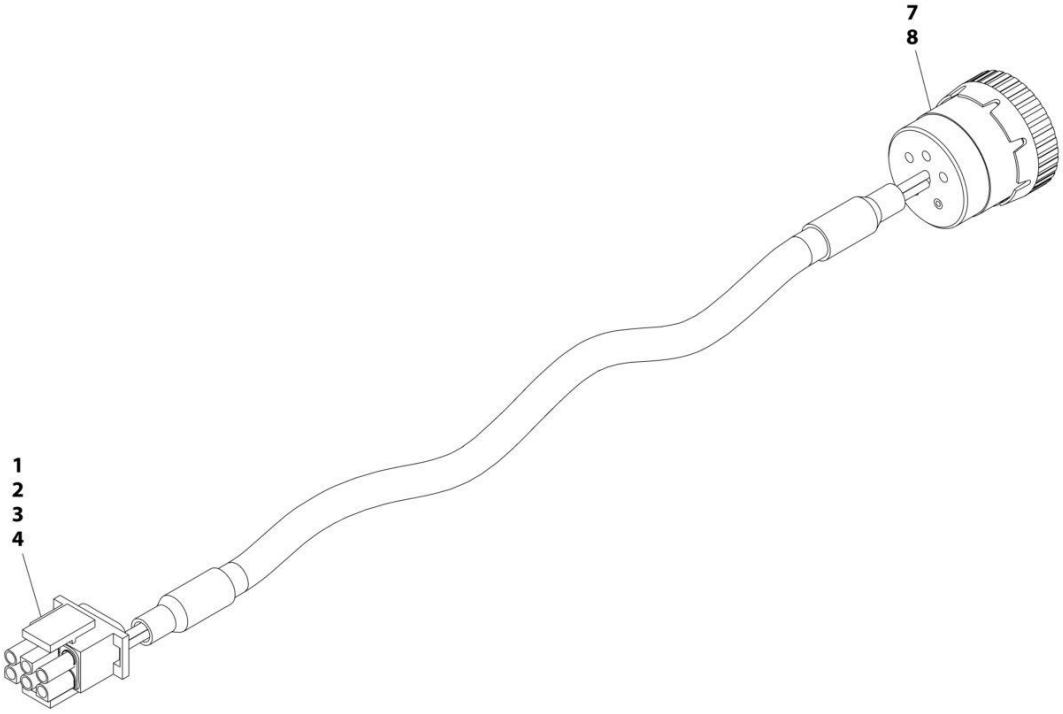

ART_1001152532

FIGURE 8-42. GENERATOR HARNESS - 4000W GENERATOR

ITEM	PART NUMBER	QTY	DESCRIPTION	REV
	1001152532	Ref	GENERATOR HARNESS	A
1	4460225	1	Connector - 6 Position	
2	4460268	2	Socket, Female	
3	4460807	1	Seal	
4	4460808	1	Seal	
7	4460465	2	Socket, Female	
8	77363233	1	Connector - 6 Position	

FIGURE 8-43. GENERATOR HARNESS - 7500W SKYPOWER GENERATOR

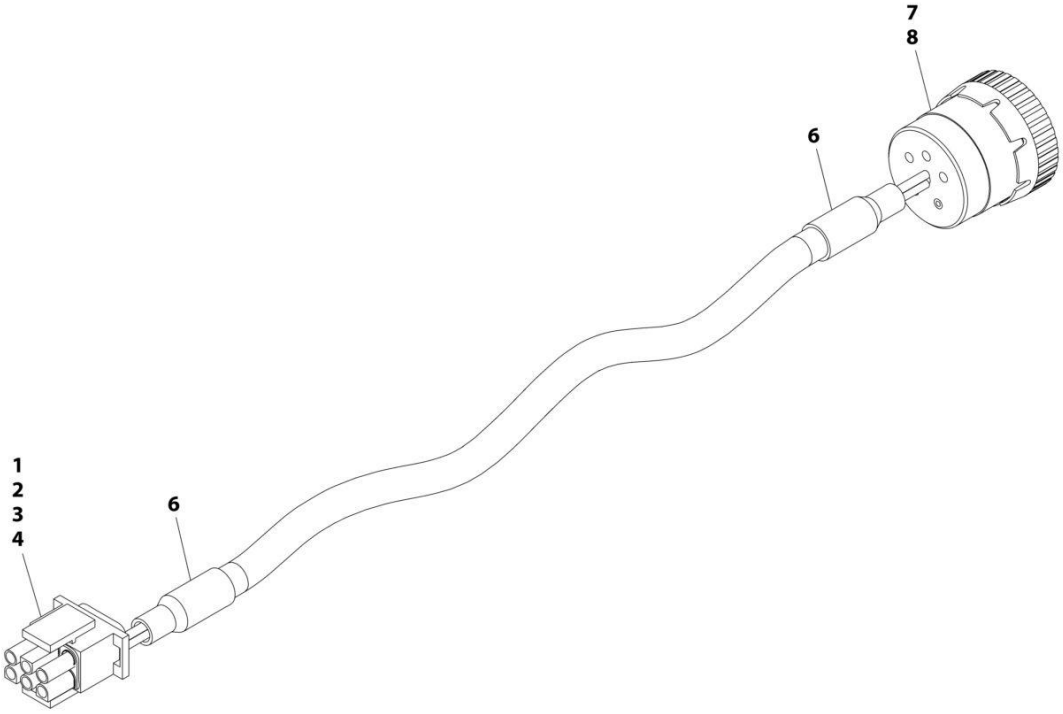

ART_4922925

FIGURE 8-43. GENERATOR HARNESS - 7500W SKYPOWER GENERATOR

ITEM	PART NUMBER	QTY	DESCRIPTION	REV
	4922925	Ref	GENERATOR TO CONTROL BOX HARNESS (7500W GENERATOR)	C
1	4460225	1	Plug, Male - 2 Position	
2	4460268	6	Socket, Female	
3	4460807	1	Seal	
4	4460808	1	Seal	
6	2820019	AR	Heat Shrink	
7	4460465	6	Socket, Female	
8	77363233	1	Connector - 6 Position	

FIGURE 8-44. GENERATOR TO ENGINE HARNESS - 2500W (FORD ENGINES)

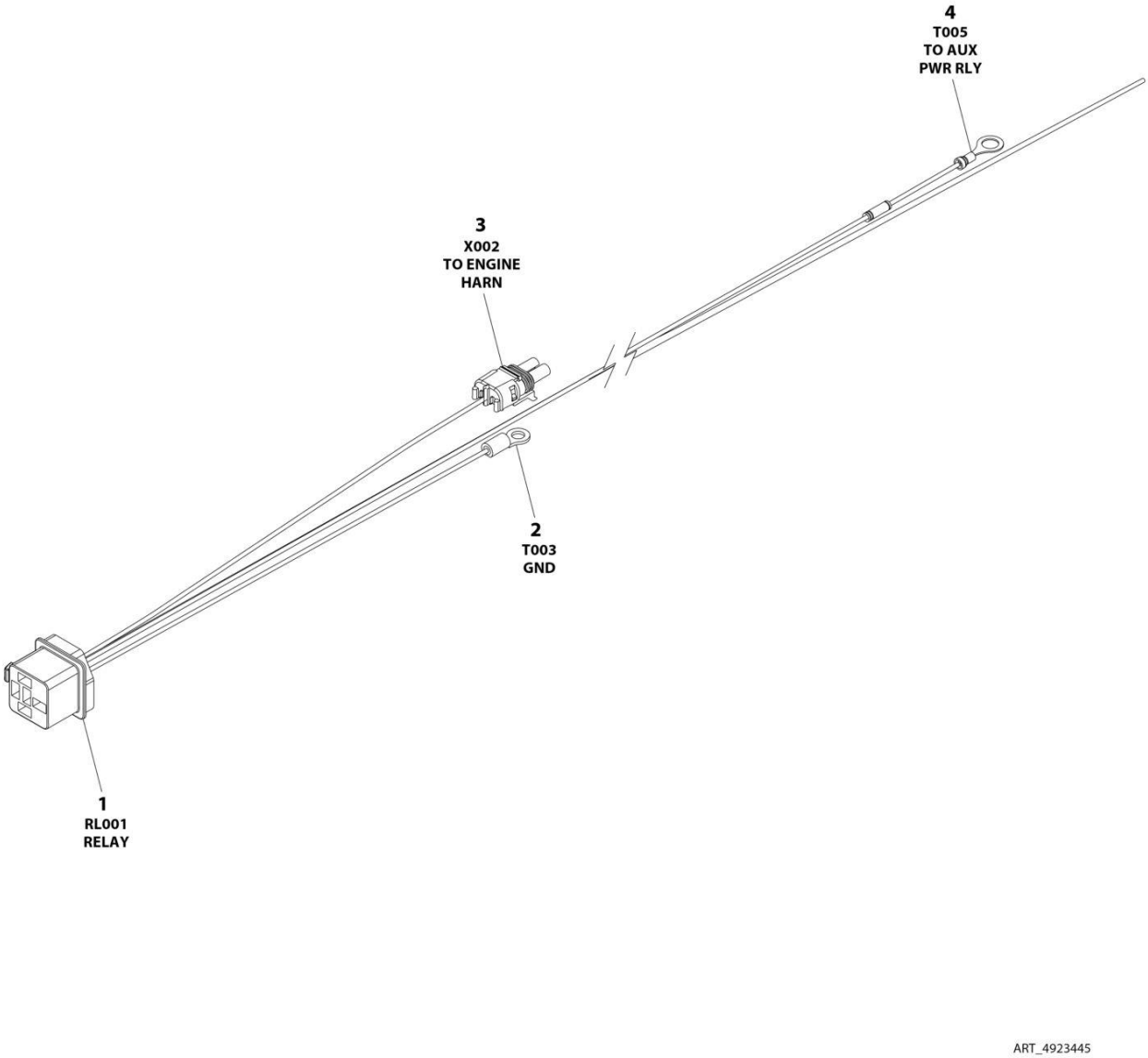

FIGURE 8-44. GENERATOR TO ENGINE HARNESS - 2500W (FORD ENGINES)

ITEM	PART NUMBER	QTY	DESCRIPTION	REV
	4923445	Ref	GENERATOR TO ENGINE HARNESS	B
1	4460374	1	Plug, Sealed Relay	
1	1001116734	2	Socket, Female	
1	1001116733	2	Socket, Female	
2	4460043	1	Terminal, Ring	
3	4460742	1	Plug, Male - 2 Position	
3	4460457	1	Socket, Female	
3	4460458	1	Seal, Terminal	
3	1001116727	1	Plug, Terminal	
4	4460670	1	Terminal, Ring	

FIGURE 8-45. GENERATOR TO ENGINE HARNESS - 4000W (DEUTZ D2011 ENGINES)

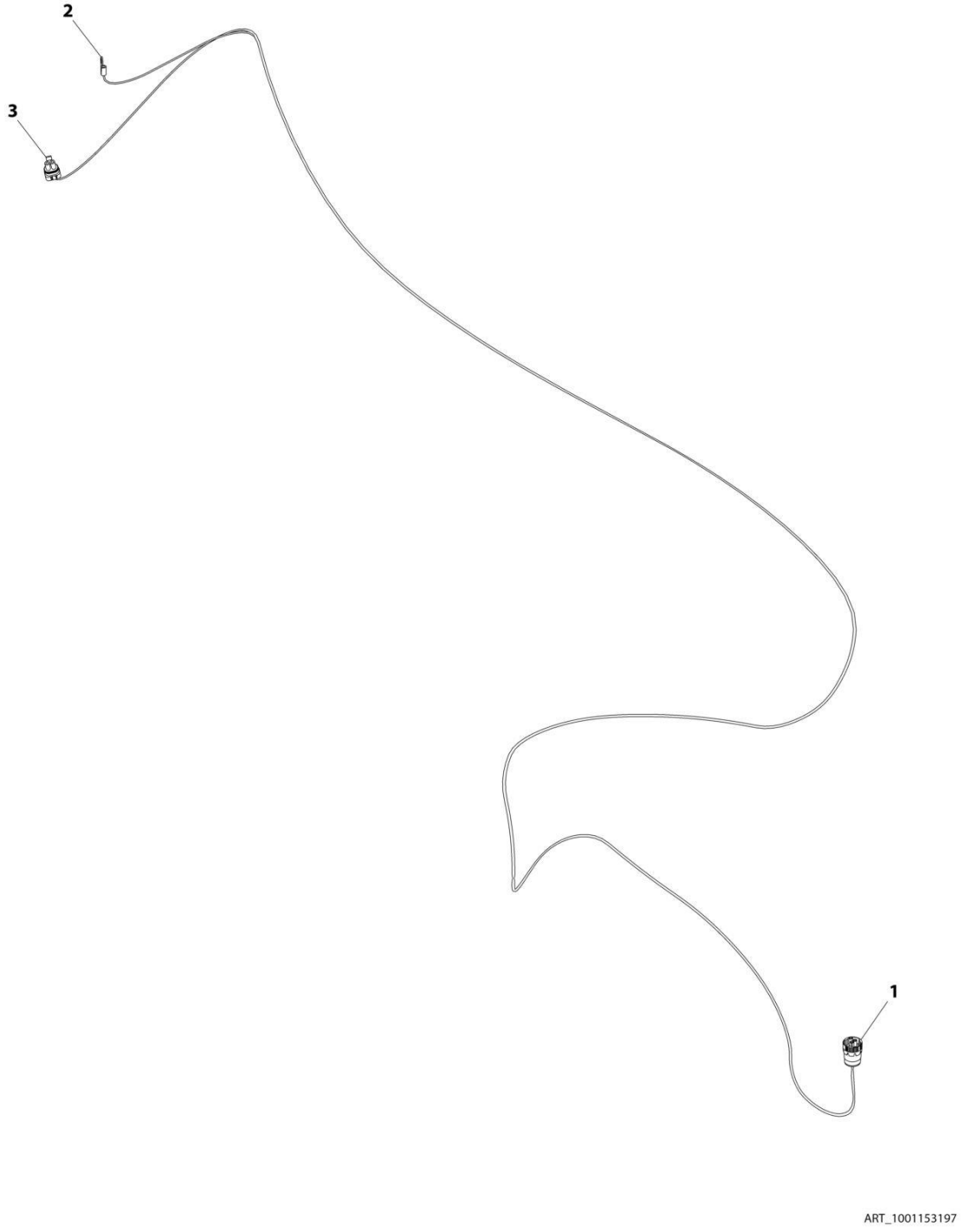

FIGURE 8-45. GENERATOR TO ENGINE HARNESS - 4000W (DEUTZ D2011 ENGINES)

ITEM	PART NUMBER	QTY	DESCRIPTION	REV
	1001153197	Ref	GENERATOR TO ENGINE HARNESS	B
1	4460967	1	Plug, Male - 3 Position	
1	4460465	2	Socket, Female	
2	4460043	1	Terminal, Ring	
3	4460742	1	Plug, Male - 2 Position	
3	4460743	1	Socket, Female	
3	4460458	1	Seal, Terminal	
3	1001116727	1	Plug, Terminal	

FIGURE 8-46. GENERATOR TO ENGINE HARNESS - 4000W (DEUTZ TD2.9L4 ENGINES)

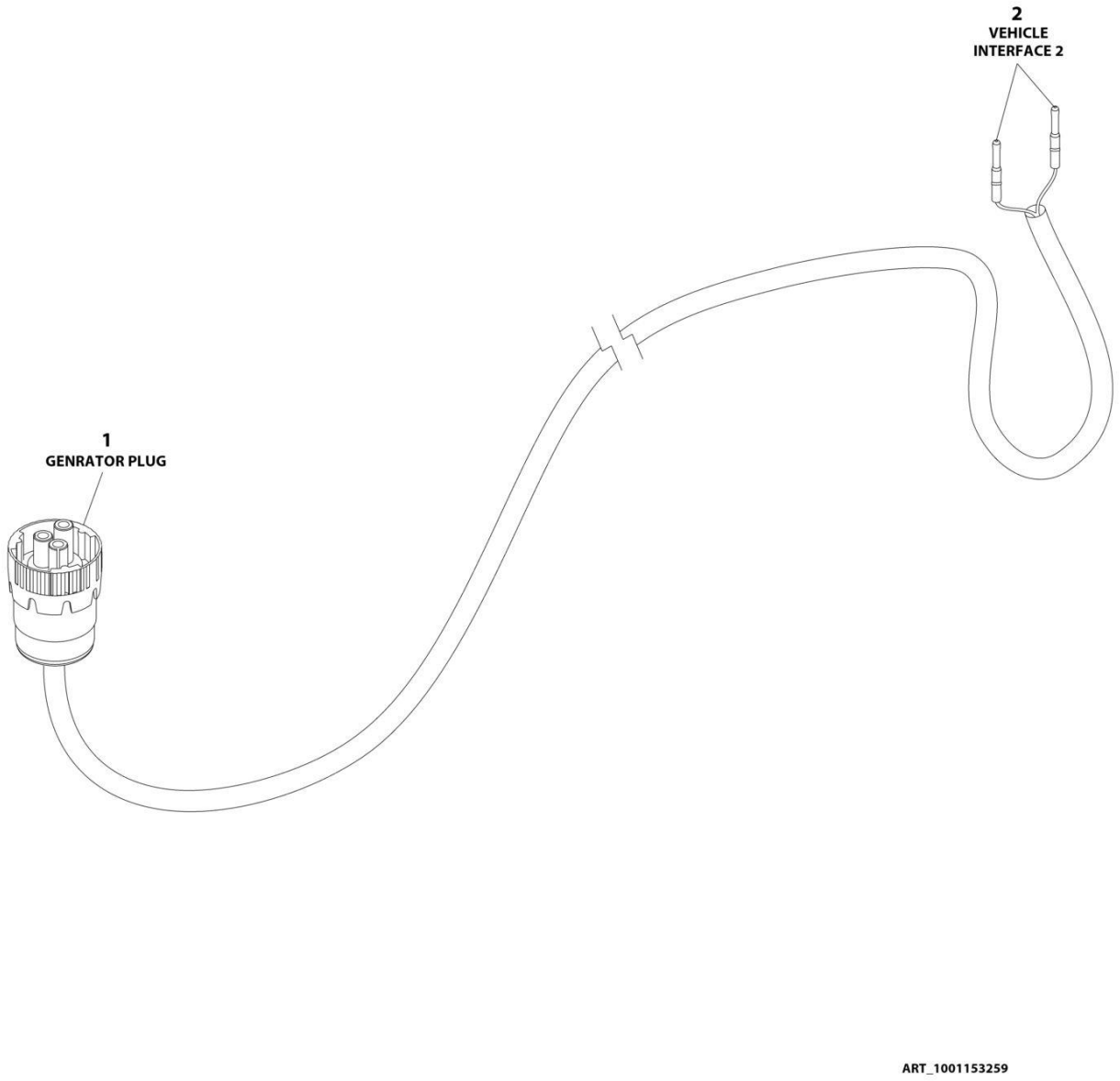

FIGURE 8-46. GENERATOR TO ENGINE HARNESS - 4000W (DEUTZ TD2.9L4 ENGINES)

ITEM	PART NUMBER	QTY	DESCRIPTION	REV
	1001153259	Ref	GENERATOR TO PLATFORM HARNESS (4000W-60HZ GENERATOR)	B
1	4460967	1	Connector - 3 Position	
1	4460465	2	Socket, Female	
2	4460465	2	Socket, Female	

FIGURE 8-47. GENERATOR TO ENGINE HARNESS - 7500W SKYPOWER GENERATOR (DEUTZ D2011 ENGINES)

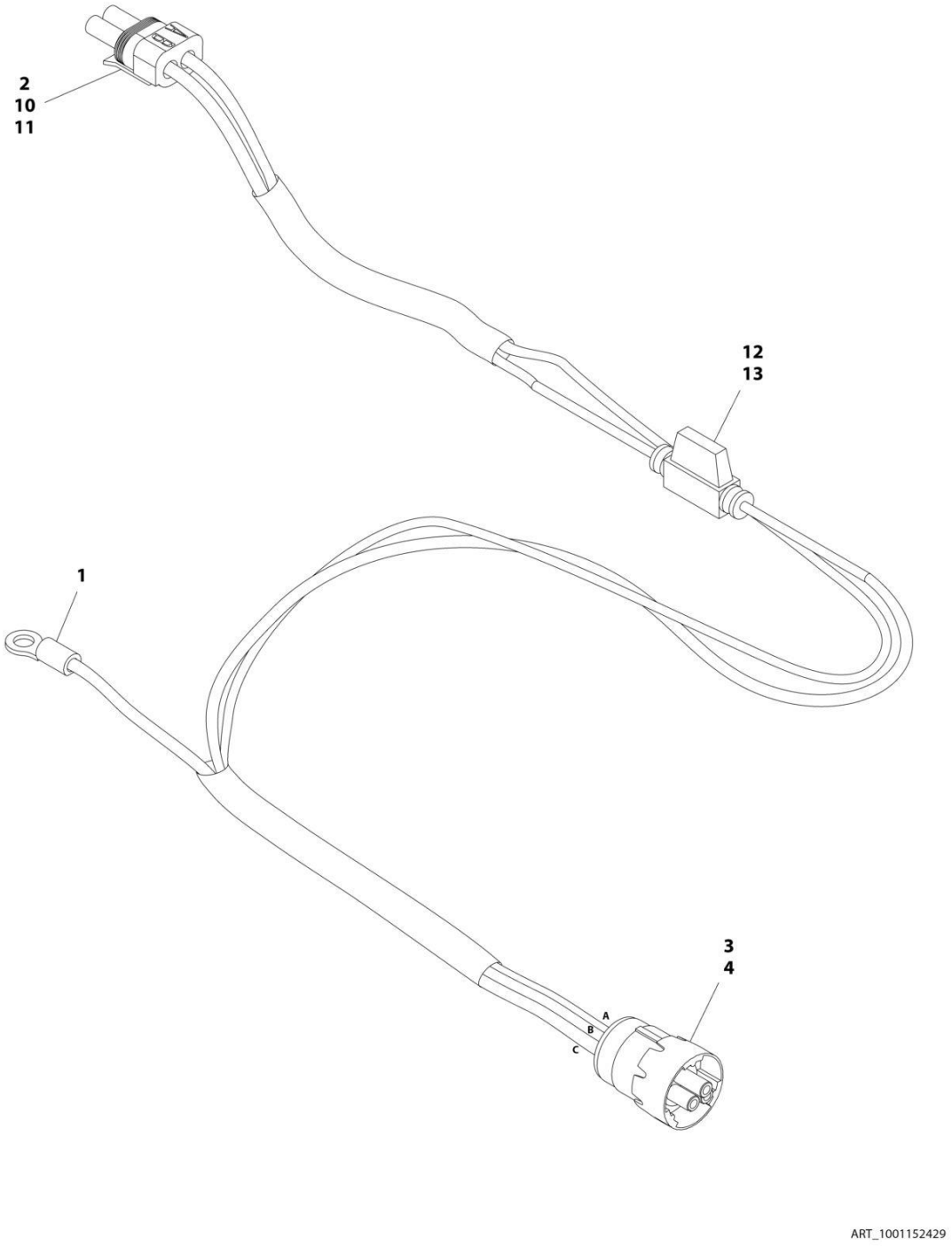

FIGURE 8-47. GENERATOR TO ENGINE HARNESS - 7500W SKYPOWER GENERATOR (DEUTZ D2011 ENGINES)

ITEM	PART NUMBER	QTY	DESCRIPTION	REV
	1001152429	Ref	GENERATOR TO ENGINE HARNESS	C
1	4460043	1	Terminal, Ring	
2	4460742	1	Plug, Male - 2 Position	
3	4460967	1	Connector - 3 Position	
4	4460465	3	Socket, Female	
10	4460743	2	Terminal, Female	
11	4460458	2	Seal	
12	2400060	1	Fuseholder (Includes Cover)	
13	2400064	1	Fuse - 5Amp	

FIGURE 8-48. GENERATOR TO ENGINE HARNESS - 7500W SKYPOWER (FORD DF 2.5L ENGINES)

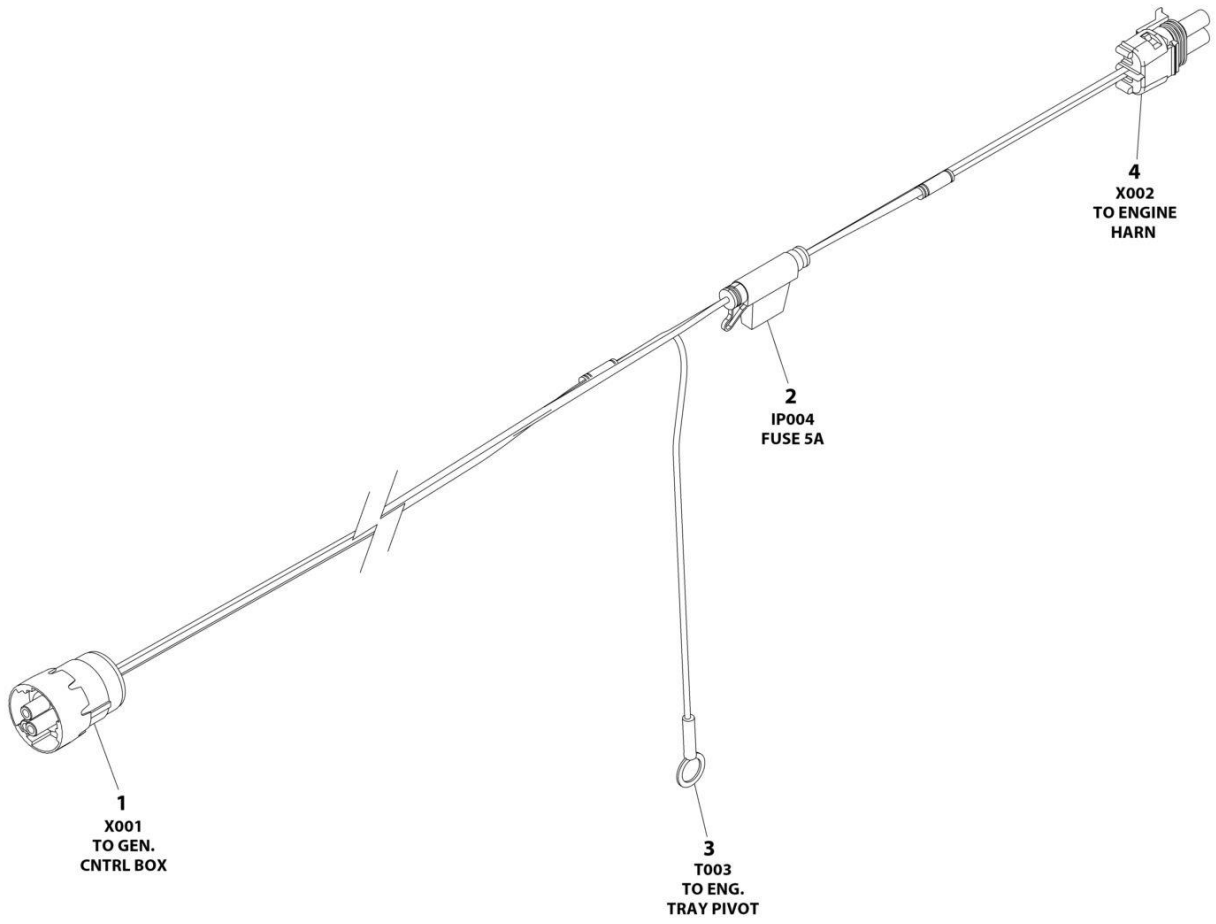

ART_1001257972

FIGURE 8-48. GENERATOR TO ENGINE HARNESS - 7500W SKYPOWER (FORD DF 2.5L ENGINES)

ITEM	PART NUMBER	QTY	DESCRIPTION	REV
	1001257972	Ref	GENERATOR TO ENGINE HARNESS	A
1	4460967	1	Plug, Male - 3 Position	
1	4460465	3	Socket, Female	
2	2400060	1	Fuse-holder (Includes Cover)	
2	2400064	1	Fuse - 5Amp	
3	4460256	1	Terminal, Ring	
4	4460742	1	Plug, Male - 2 Position	
4	4460457	2	Socket, Female	
4	4460458	2	Seal, Terminal	

FIGURE 8-49. GENERATOR HARNESS - 7500W SKYPOWER (DEUTZ TD2.9L4 T4F ENGINES)

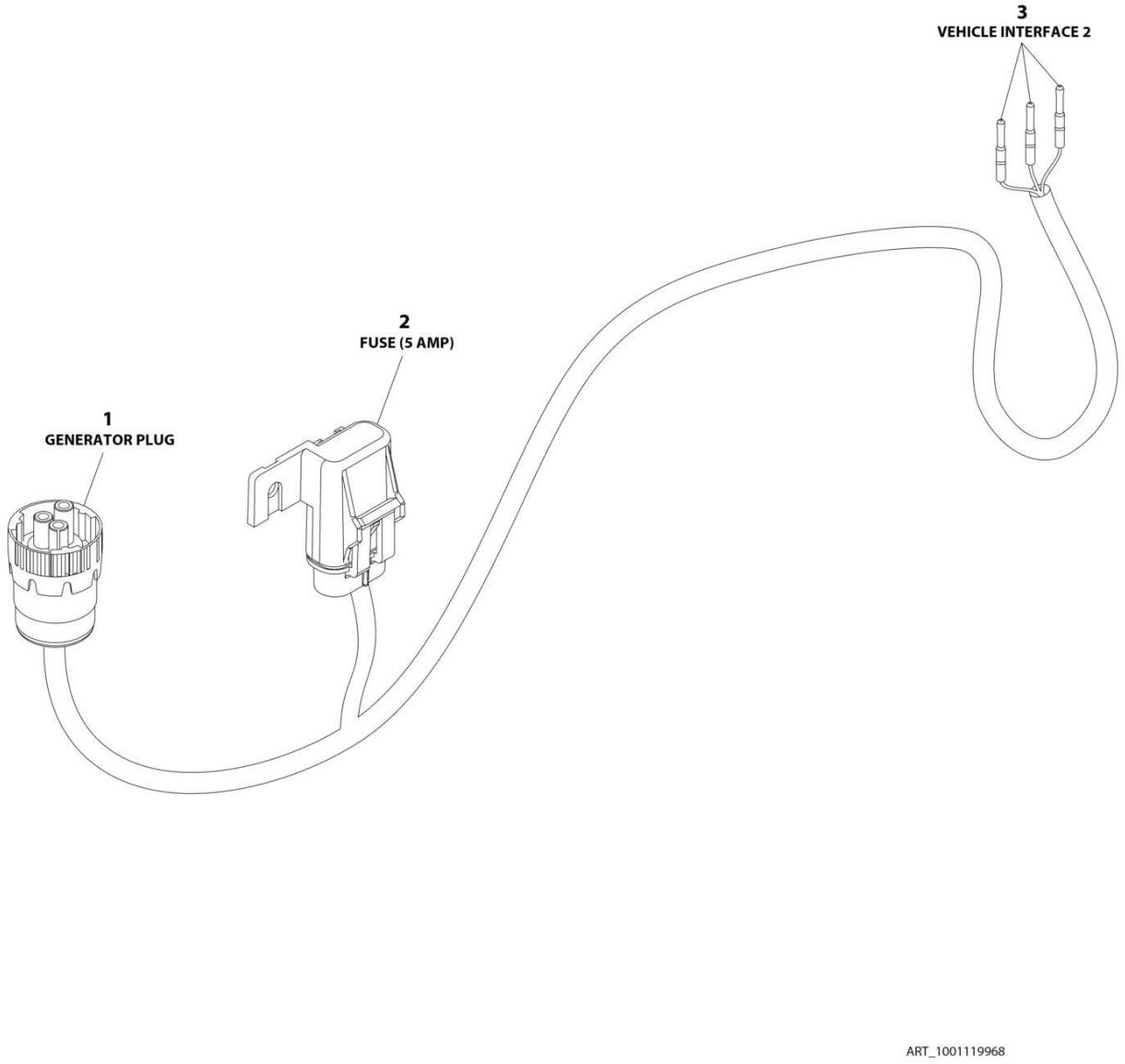

FIGURE 8-49. GENERATOR HARNESS - 7500W SKYPOWER (DEUTZ TD2.9L4 T4F ENGINES)

ITEM	PART NUMBER	QTY	DESCRIPTION	REV
	1001119968	Ref	GENERATOR HARNESS - 7500W GENERATOR	C
1	4460967	1	Connector - 3 Position	
1	4460465	3	Socket, Female	
2	1001117078	1	Connector, Metri-Pack with 5Amp Fuse	
3	4460465	3	Socket, Female	

FIGURE 8-50. GENERATOR TO REAR OF BOOM HARNESS - 110V

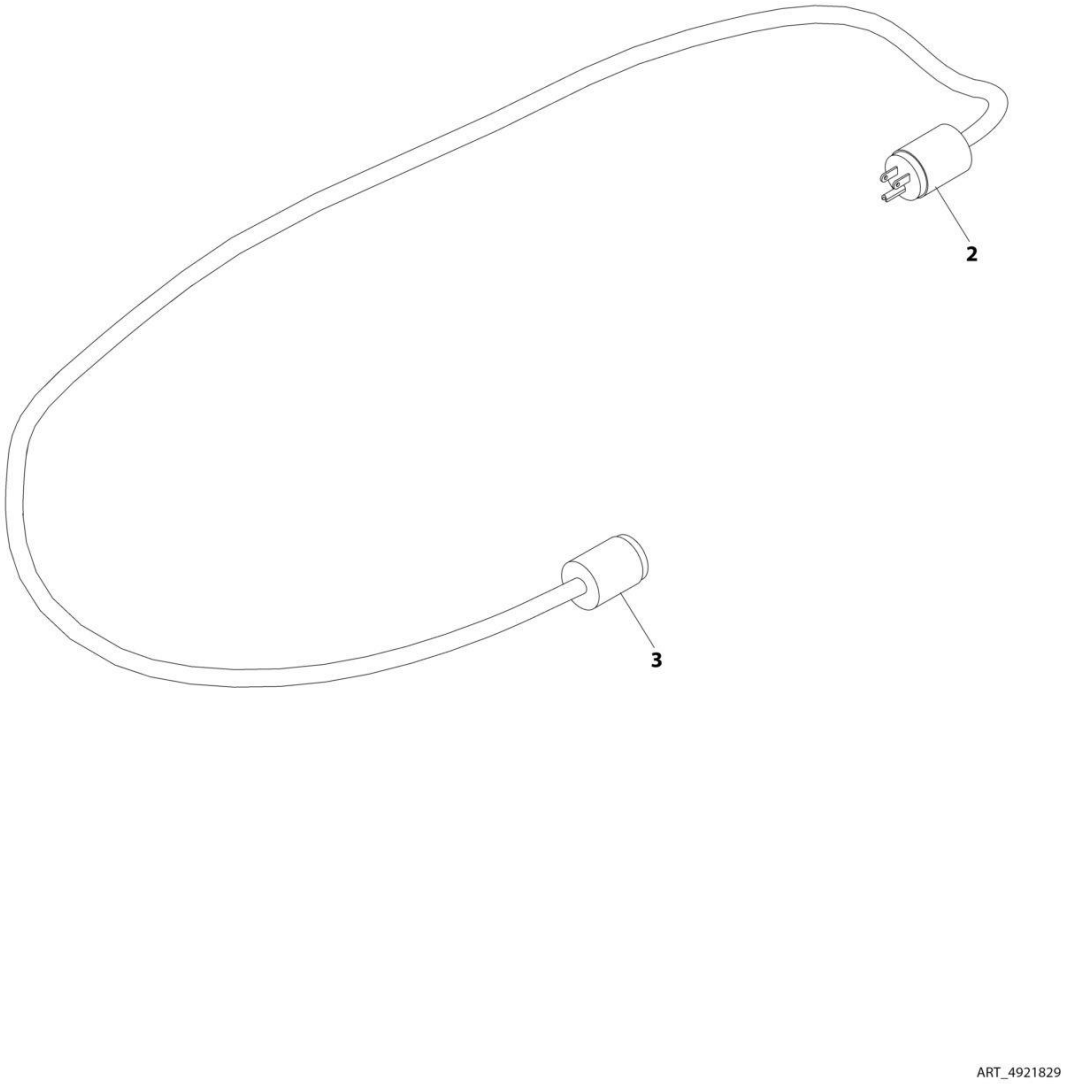

FIGURE 8-50. GENERATOR TO REAR OF BOOM HARNESS - 110V

ITEM	PART NUMBER	QTY	DESCRIPTION	REV
	4921829	Ref	GENERATOR TO REAR OF BOOM HARNESS - 110V	Z-A
2	4460205	1	Plug, Male	
3	4460134	1	Connector, Female	

FIGURE 8-51. GENERATOR TO REAR OF BOOM HARNESS - 220V

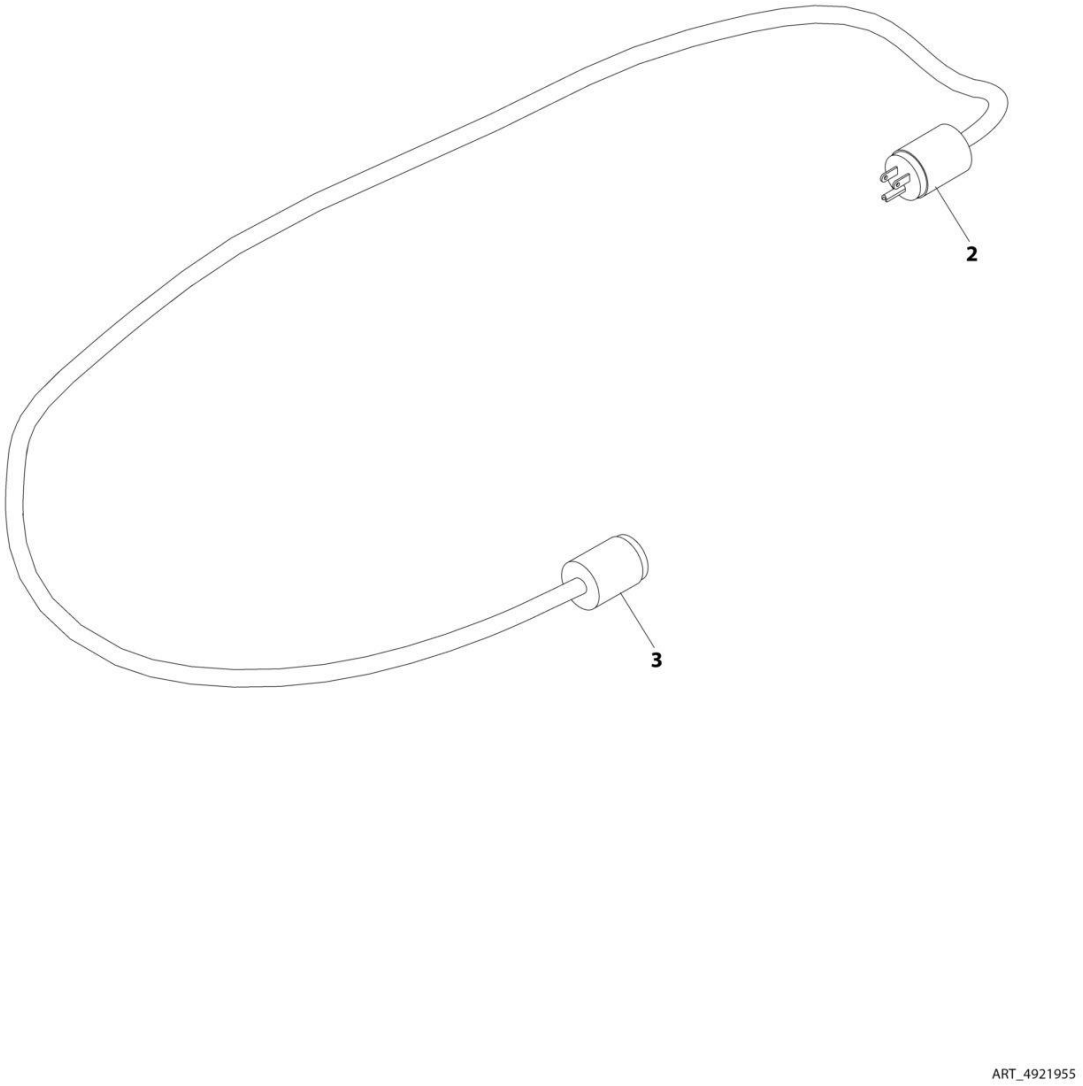

FIGURE 8-51. GENERATOR TO REAR OF BOOM HARNESS - 220V

ITEM	PART NUMBER	QTY	DESCRIPTION	REV
	4921955	Ref	GENERATOR TO REAR OF BOOM HARNESS - 220V	A
2	4460233	1	Terminal, Plug	
3	4460701	1	Terminal, Connector	

FIGURE 8-52. GROUND CONTROL BOX HARNESS

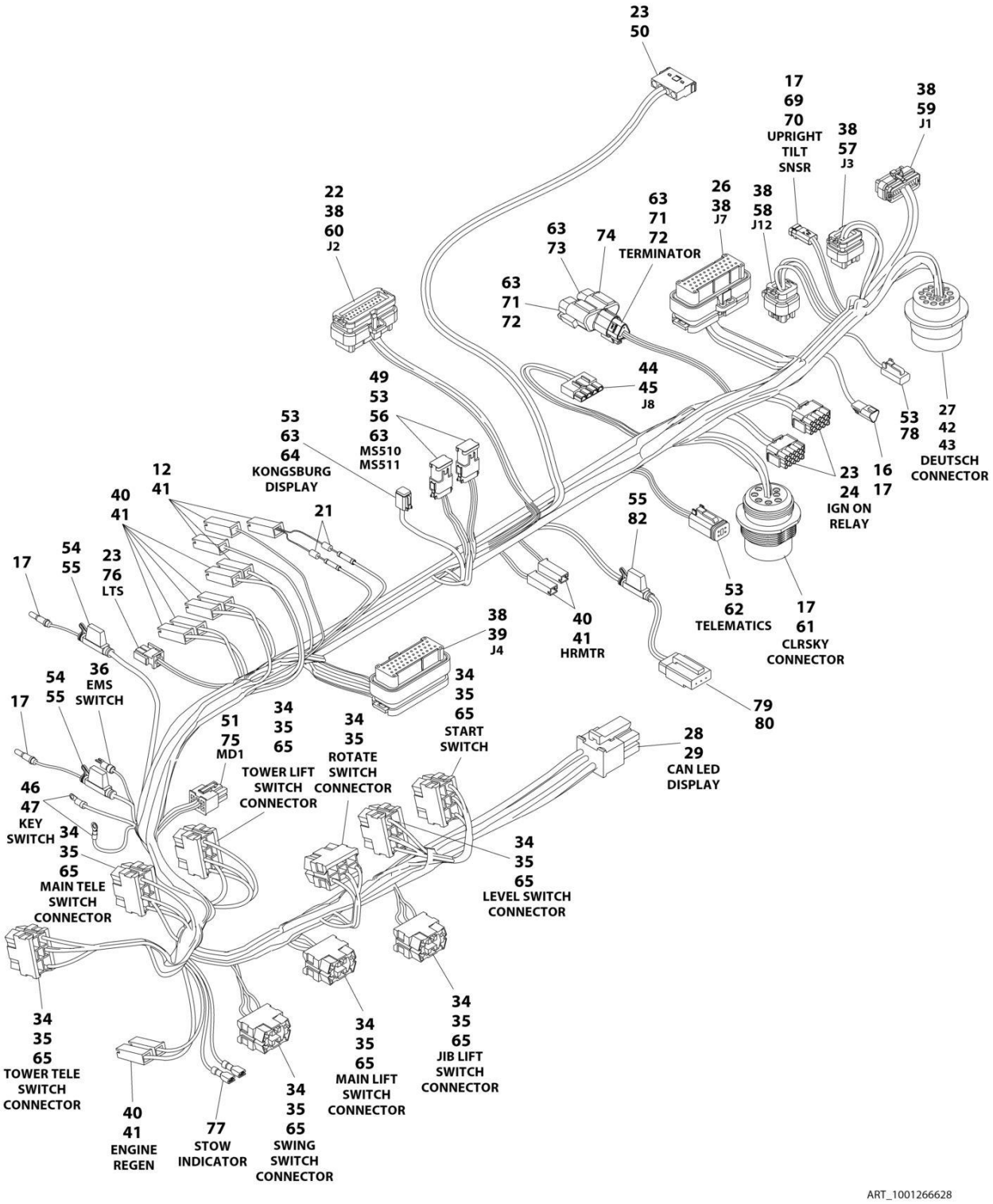

FIGURE 8-52. GROUND CONTROL BOX HARNESS

ITEM	PART NUMBER	QTY	DESCRIPTION	REV
	1001266628	Ref	GROUND CONTROL BOX HARNESS	C
12	4460297	4	Terminal	
16	4460536	1	Receptacle, Female - 3 Position	
17	4460943	12	Pin, Male	
21	3990010	2	Diode, 6 Amp	
22	4460905	2	Seal, Terminal	
23	4460227	36	Pin, Male	
24	4460434	2	Plug Male - 15 Position	
26	4460873	1	Connector - 35 Position	
27	4460508	4	Terminal	
28	1001237667	1	Plug Male - 6 Position	
29	1001237668	5	Terminal	
34	1001159186	18	Terminal	
35	4460418	9	Connector, Switch	
36	4460806	5	Terminal, Fork	
38	4460871	84	Socket, Female	
39	4460876	1	Connector - 35 Position	
40	4460259	15	Terminal	
41	4460260	19	Housing, Terminal	
42	4460464	13	Pin, Male	
43	4460866	1	Connector - 19 Position	
44	4460878	1	Plug Male - 4 Position	
45	4460887	3	Terminal	
46	4460142	4	Terminal, Ring	
47	4460313	3	Terminal	
49	1001119020	2	Connector, Buss Bar - 12 Position	
50	4460761	1	Receptacle, Female - 4 Position	
51	4460868	AR	Terminal	
53	4460465	35	Socket, Female	
54	2400060	2	Fuse Holder with Cover	
55	8229242	3	Fuse 5Amp	
56	4460933	2	Plug, Male - 12 Position	
57	4460872	1	Connector - 14 Position	
58	1001113961	1	Connector - 8 Position	
59	4460874	1	Connector - 35 Position	
60	4460875	1	Connector - 35 Position	
61	1001112612	1	Connector - 9 Position	
62	4460884	1	Plug, Male - 4 Position	
63	4460466	7	Plug, Terminal	
64	4460894	1	Plug, Male - 6 Position	
65	4460419	8	Terminal	
69	1001229530	1	Receptacle, Female - 3 Position	
70	1001200497	1	Plug, Male - 3 Position	
71	1001116812	2	Plug, Male - 3 Position	
72	4460944	4	Socket, Female	
73	1001116815	1	Plug, Male - 3 Position	
74	4460945	1	Connector, 3-Way Tee	
75	4460877	4	Terminal	
76	4460320	1	Connector - 2 Position	
77	1001201885	2	Terminal	

ITEM	PART NUMBER	QTY	DESCRIPTION	REV
78	4460891	1	Plug, Male - 2 Position	
79	4460911	1	Connector - 3 Position	
80	1001116694	3	Terminal	
82	2400060	AR	Fuse Holder with Cover (Prior to PVC 2201)	
82	1001255901	AR	Fuse Holder with Cover (PVC 2201 to Present)	

FIGURE 8-53. MID BOOM PROXIMITY SENSOR HARNESS

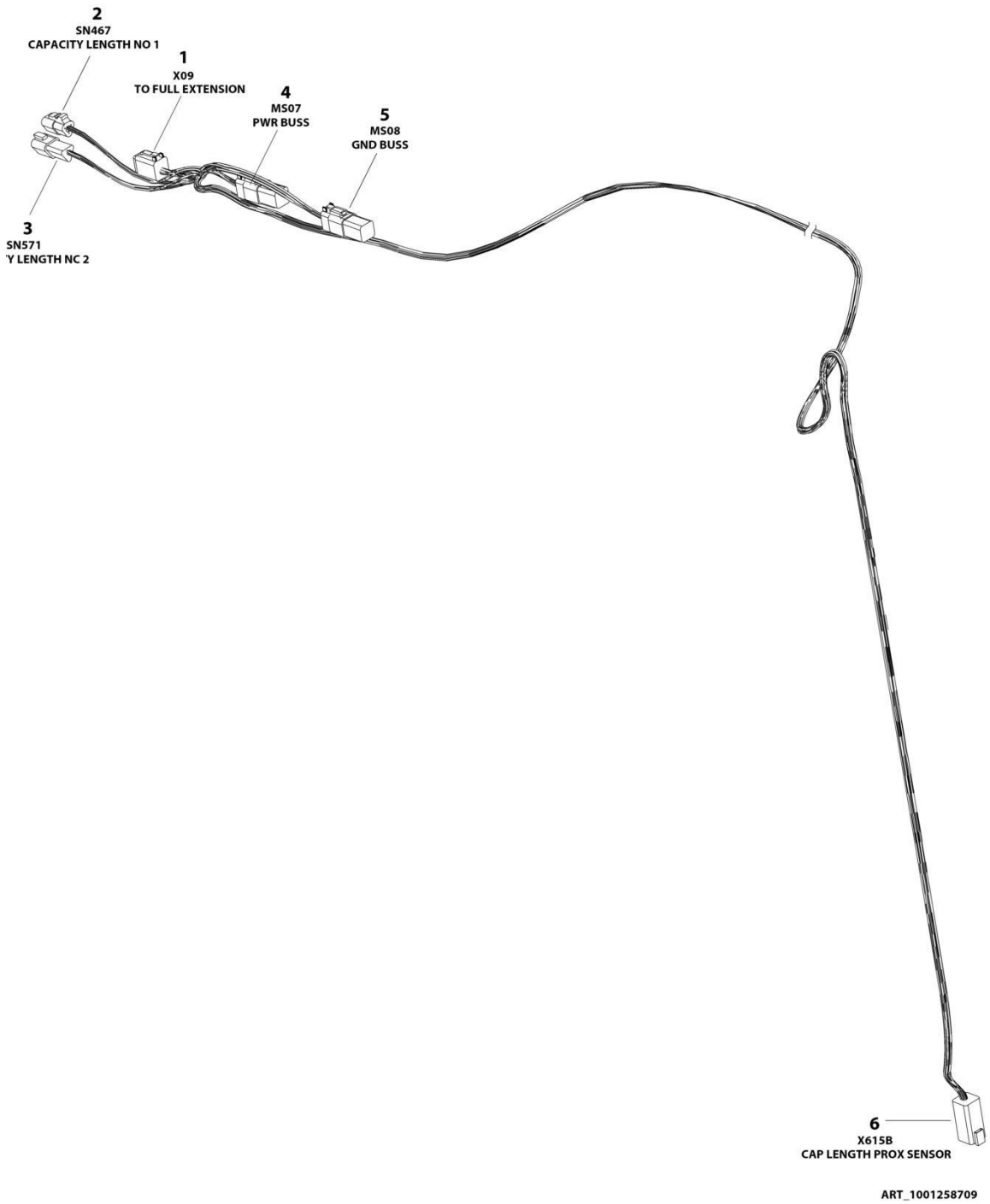

FIGURE 8-53. MID BOOM PROXIMITY SENSOR HARNESS

ITEM	PART NUMBER	QTY	DESCRIPTION	REV
	1001258709	Ref	MID BOOM PROX SENSOR HARNESS	B
1	4460894	1	Plug, Male - 6 Position	
1	4460465	6	Socket, Female	
2	4460539	1	Plug, Male - 3 Position	
2	4460465	3	Socket, Female	
3	4460536	1	Receptacle, Female - 3 Position	
3	4460464	3	Pin, Male	
4	4460894	2	Plug, Male - 6 Position	
4	4460465	10	Socket, Female	
4	4460466	2	Plug, Terminal	
4	4460892	2	Connector, Buss Bar - 6 Position	
5	4460899	1	Connector - 6 Position	
5	4460465	6	Socket, Female	

FIGURE 8-54. PLATFORM CONSOLE BOX HARNESS

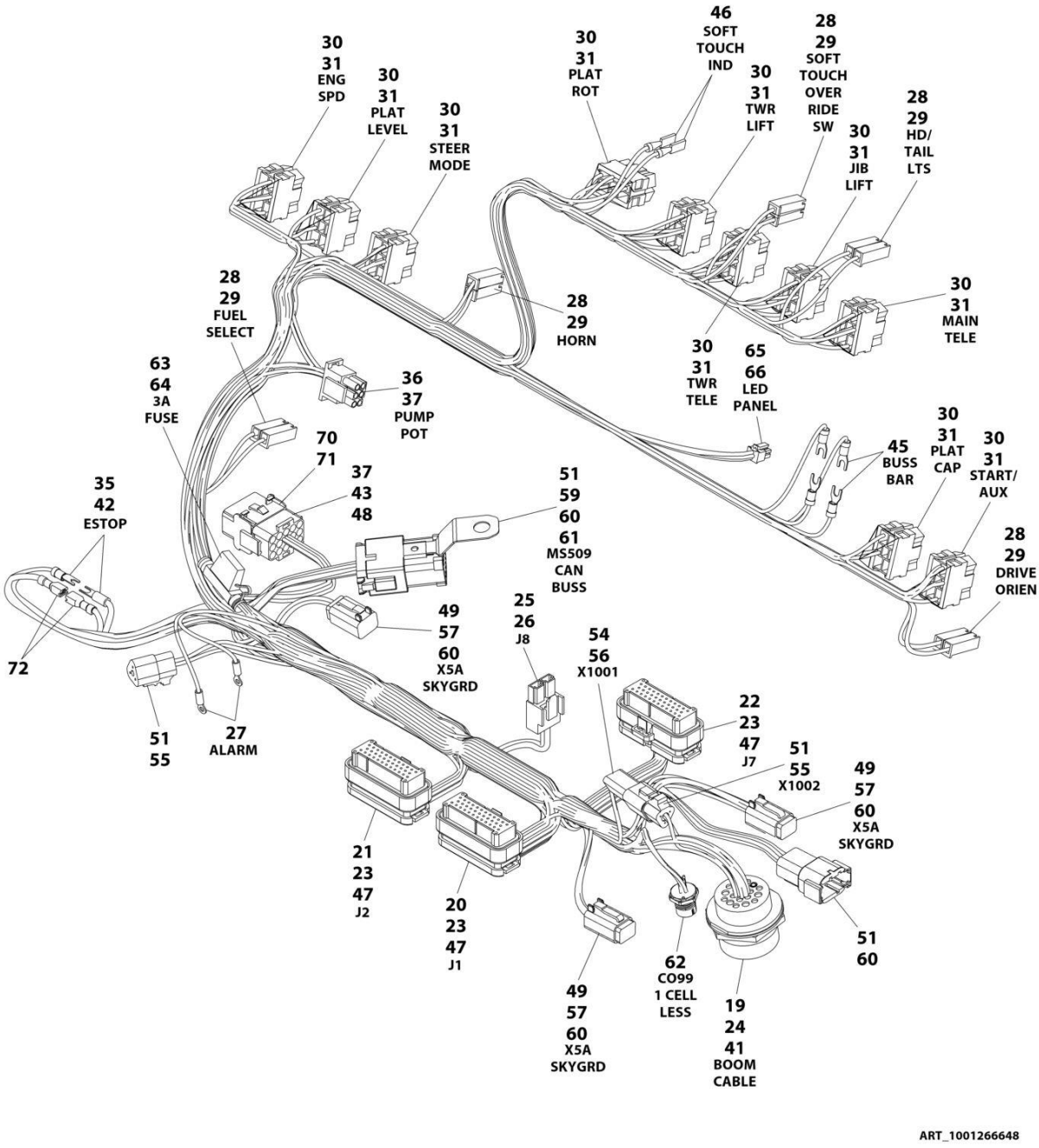

FIGURE 8-54. PLATFORM CONSOLE BOX HARNESS

ITEM	PART NUMBER	QTY	DESCRIPTION	REV
	1001266648	Ref	PLATFORM CONSOLE BOX HARNESS	B
19	4460866	1	Connector - 19 Position	
20	4460874	1	Connector - 35 Position	
21	4460875	1	Connector - 35 Position	
22	4460873	1	Connector - 35 Position	
23	4460871	81	Socket, Female	
24	4460464	6	Pin, Male	
25	4460879	1	Plug, Male - 2 Position	
26	4460887	2	Terminal	
27	1001098122	2	Terminal, Ring	
28	4460260	10	Housing, Terrminal	
29	4460259	10	Terminal	
30	4460418	9	Connector, Switch	
31	4460419	27	Terminal	
32	4120035	14	Socket, Light (Not Shown)	
33	4460634	14	Socket, Lamp (Single Wire) (Not Shown)	
34	4460635	14	Socket, Lamp (Double Wire) (Not Shown)	
35	4460888	1	Terminal, Fork	
36	4460225	1	Plug, Male - 6 Position	
37	4460227	31	Pin, Male	
41	4460508	3	Pin, Male	
42	4460806	1	Terminal, Fork	
43	4460434	2	Connector - 15 Position	
44	2920129	14	Bulb (Not Shown)	
45	4460183	4	Terminal, Fork	
46	4460016	2	Terminal	
47	4460905	24	Plug, Terminal	
48	4460267	1	Pin, Male	
49	4460465	5	Socket, Female	
51	4460944	11	Socket, Female	
54	4460536	1	Receptacle, Female - 3 Position	
55	4460539	1	Plug, Male - 3 Position	
56	4460943	3	Pin, Male	
57	4460894	2	Plug, Male - 6 Position	
59	4460933	2	Plug, Male - 12 Position	
60	4460466	5	Plug, Terminal	
61	1001119020	1	Connector, Buss Bar - 12 Position	
62	1001213447	1	Connector - 5 Position	
63	2400060	1	Fuseholder Includes Cover	
64	8229249	1	Fuse, 3 Amp	
65	1001237667	1	Plug, Male - 6 Position	
66	1001237668	4	Socket, Female	
70	4460708	2	Connector - 15 Position	
71	4460226	2	Socket, Female	
72	1001201885	2	Terminal	

FIGURE 8-55. RECEPTACLE BOX KIT - 110V IEC YELLOW (CE & UK CA SPECS)

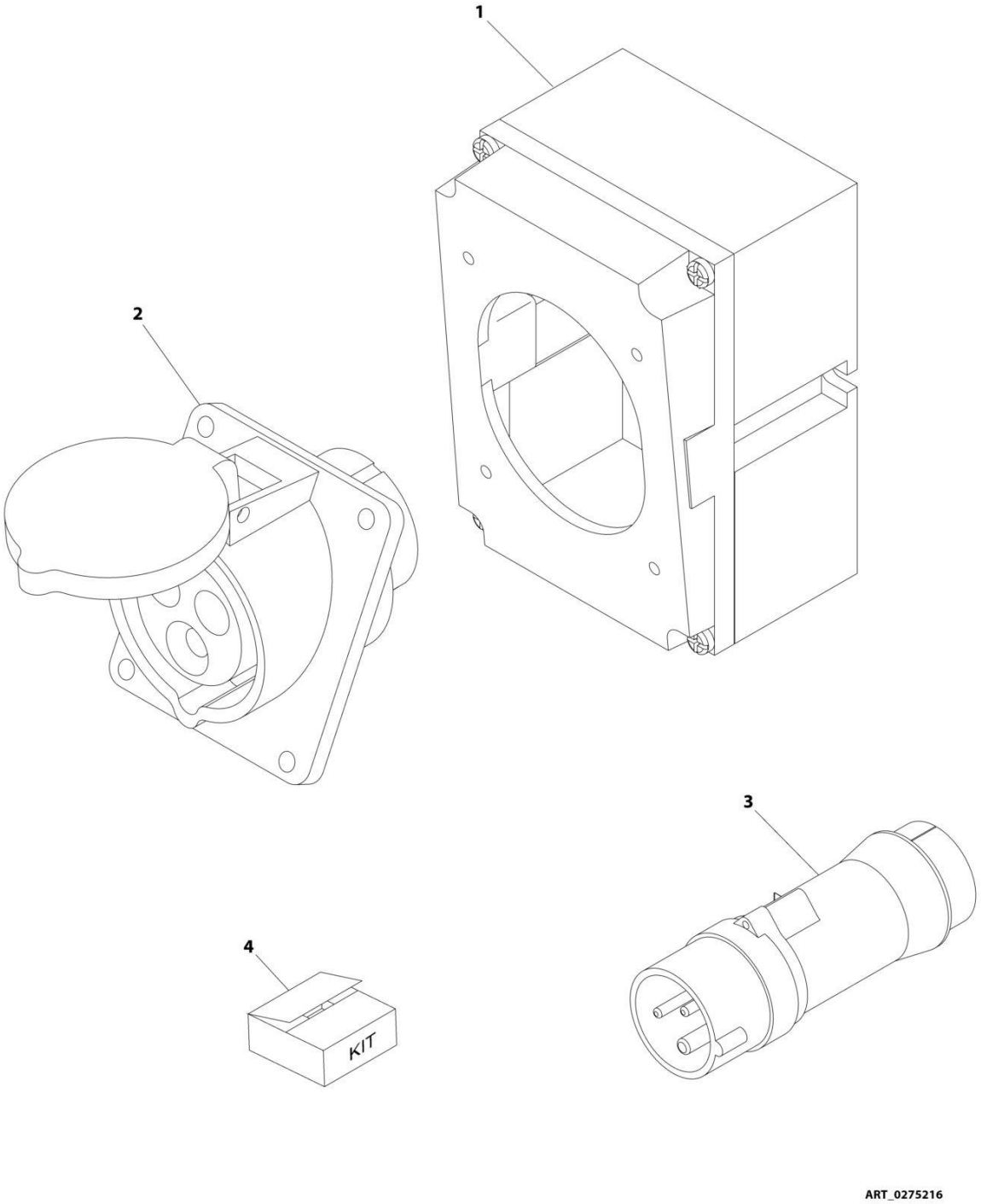

FIGURE 8-55. RECEPTACLE BOX KIT - 110V IEC YELLOW (CE & UK CA SPECS)

ITEM	PART NUMBER	QTY	DESCRIPTION	REV
	0275216	Ref	RECEPTACLE BOX KIT - 110V IEC YELLOW	B
1	0861781	1	Box, Switch	
2	4461198	1	Receptacle	
3	4461196	1	Plug, Male	
4	1001100341	1	Plug and Socket Kit (Includes Items 1-3 and Female Plug p/n 4461197)	

FIGURE 8-56. RECEPTACLE BOX KIT - 220V IEC BLUE (CE & UK CA SPECS)

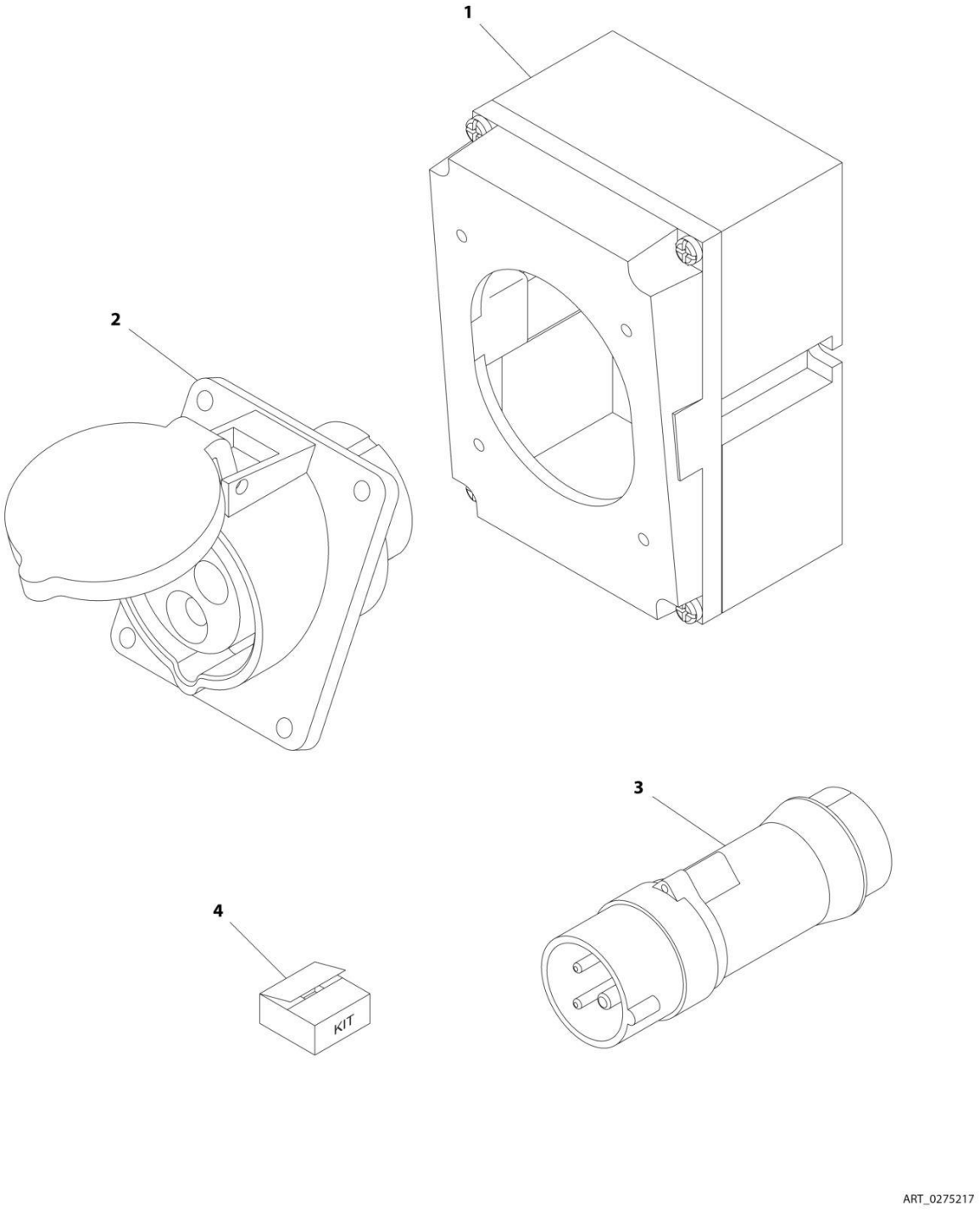

FIGURE 8-56. RECEPTACLE BOX KIT - 220V IEC BLUE (CE & UK CA SPECS)

ITEM	PART NUMBER	QTY	DESCRIPTION	REV
	0275217	Ref	RECEPTACLE BOX KIT - 220V IEC BLUE	B
1	0861781	1	Box, Switch	
2	4461201	1	Receptacle	
3	4461199	1	Plug, Male	
4	1001100342	1	Plug and Socket Kit (Includes Items 1-3 and Female Plug p/n 4461200)	

FIGURE 8-57. RECEPTACLE BOX KIT - 220V CEE7 POST GROUND 2X4 BOX (CE & UK CA SPEC)

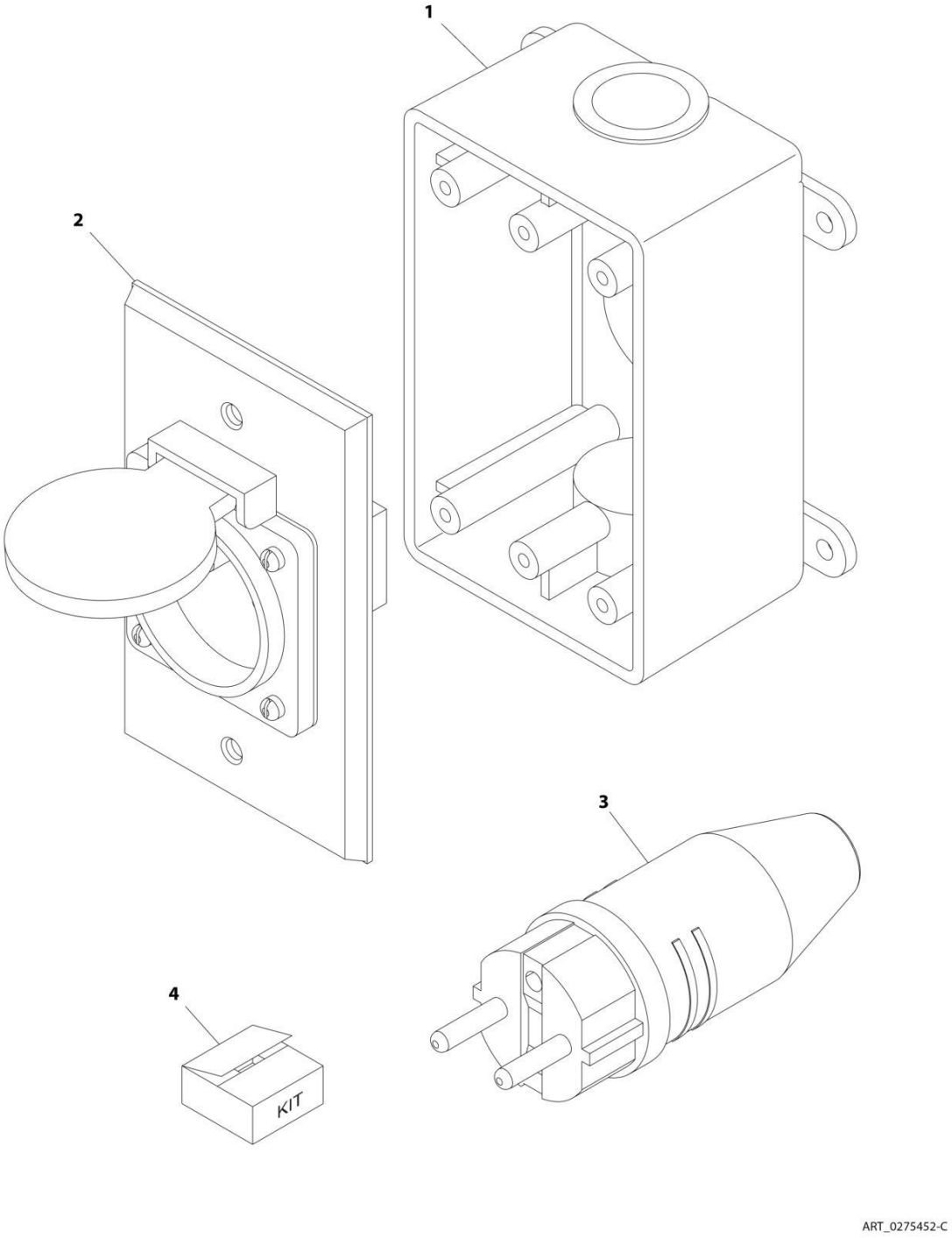

FIGURE 8-57. RECEPTACLE BOX KIT - 220V CEE7 POST GROUND 2X4 BOX (CE & UK CA SPEC)

ITEM	PART NUMBER	QTY	DESCRIPTION	REV
	0275452	Ref	RECEPTACLE BOX KIT - 220V CEE7 POST GROUND 2IN X 4IN BOX	C
1	0861731	1	Box, Switch	
2	4461244	1	Receptacle	
3	4461205	1	Plug, Male	
4	1001100345	1	Plug and Socket Kit (Includes Items 1-3 and Female Plug p/n 4461203)	

FIGURE 8-58. RECEPTACLE BOX KIT - 220V CEE7 SIDE GROUND 2X4 BOX (CE & UK CA SPEC)

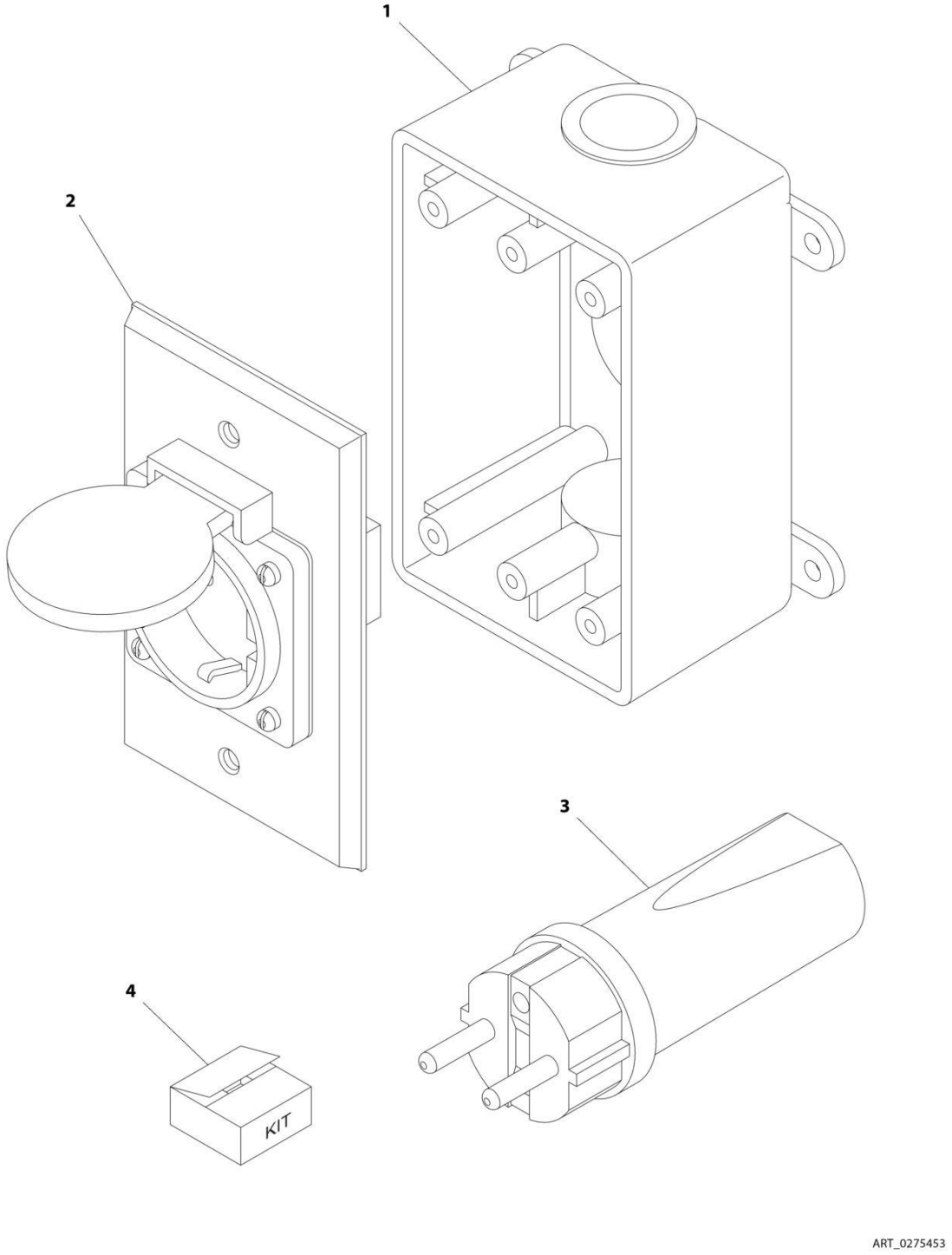

FIGURE 8-58. RECEPTACLE BOX KIT - 220V CEE7 SIDE GROUND 2X4 BOX (CE & UK CA SPEC)

ITEM	PART NUMBER	QTY	DESCRIPTION	REV
	0275453	Ref	RECEPTACLE BOX KIT - 220V CEE7 SIDE GROUND	B
1	0861731	1	Box, Switch	
2	4461245	1	Receptacle	
3	4461205	1	Plug, Male	
4	1001100347	1	Plug and Socket Kit (Includes Items 1-3 and Female Plug p/n 4461206)	

FIGURE 8-59. RECEPTACLE BOX KIT - 220V AFSINT107 KEYED GROUND (CE & UK CA SPECS)

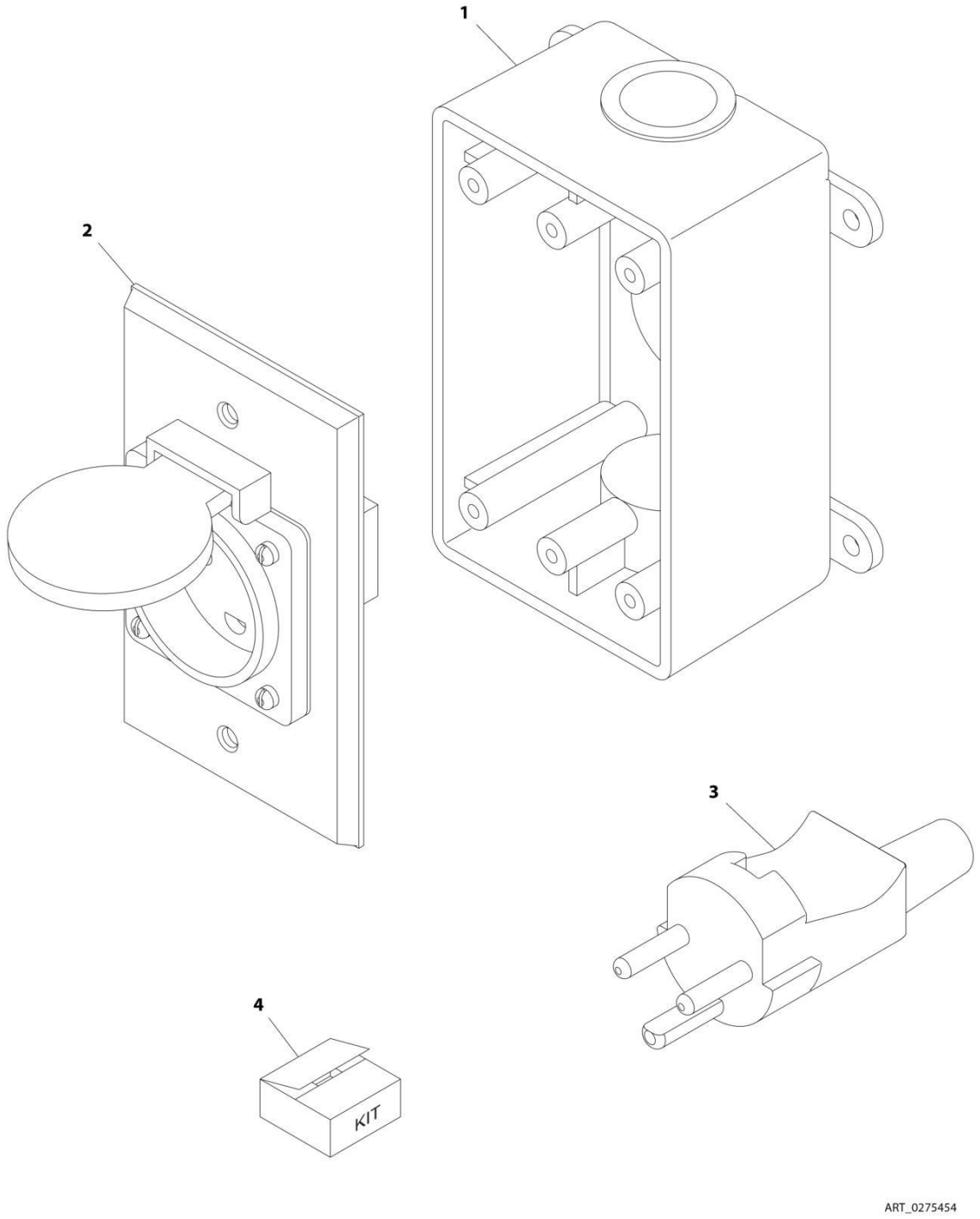

FIGURE 8-59. RECEPTACLE BOX KIT - 220V AFSINT107 KEYED GROUND (CE & UK CA SPECS)

ITEM	PART NUMBER	QTY	DESCRIPTION	REV
	0275454	Ref	RECEPTACLE BOX KIT - 220V AFSINT 107	B
1	0861731	1	Box, Switch	
2	4461246	1	Receptacle	
3	4461249	1	Plug, Male	
4	1001100346	1	Plug and Socket Kit (Includes Items 1-3 and Female Plug p/n 4461250)	

FIGURE 8-60. SKYEYE EMITTER HARNESS

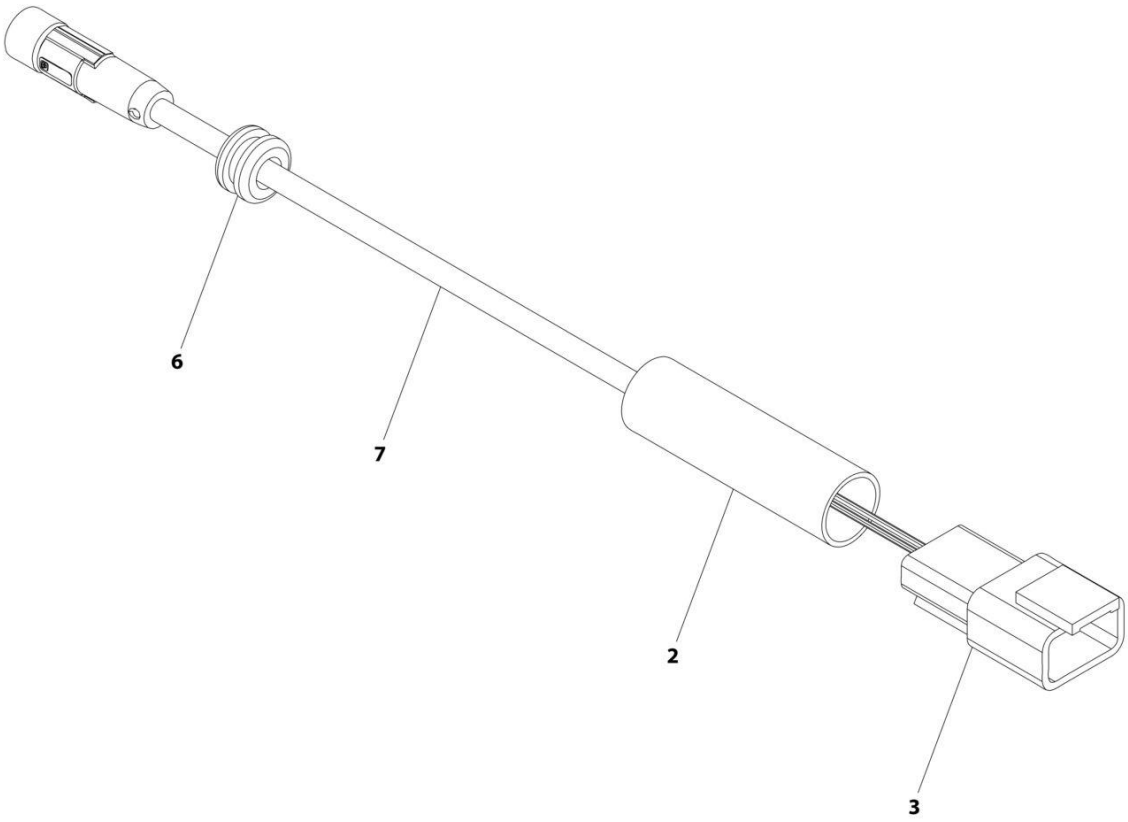

ART_1001237864

FIGURE 8-60. SKYEYE EMITTER HARNESS

ITEM	PART NUMBER	QTY	DESCRIPTION	REV
	1001237864	Ref	SKYEYE EMITTER HARNESS	A
2	2820247	AR	Tubing, Heat Shrink	
3	4460910	1	Connector - 3 Position	
3	1001119620	3	Pin, Male	
6	1001227996	1	Grommet	
7	1001237862	1	Cable, M8 Female Cordset	

FIGURE 8-61. SKYEYE INTERMEDIATE HARNESS

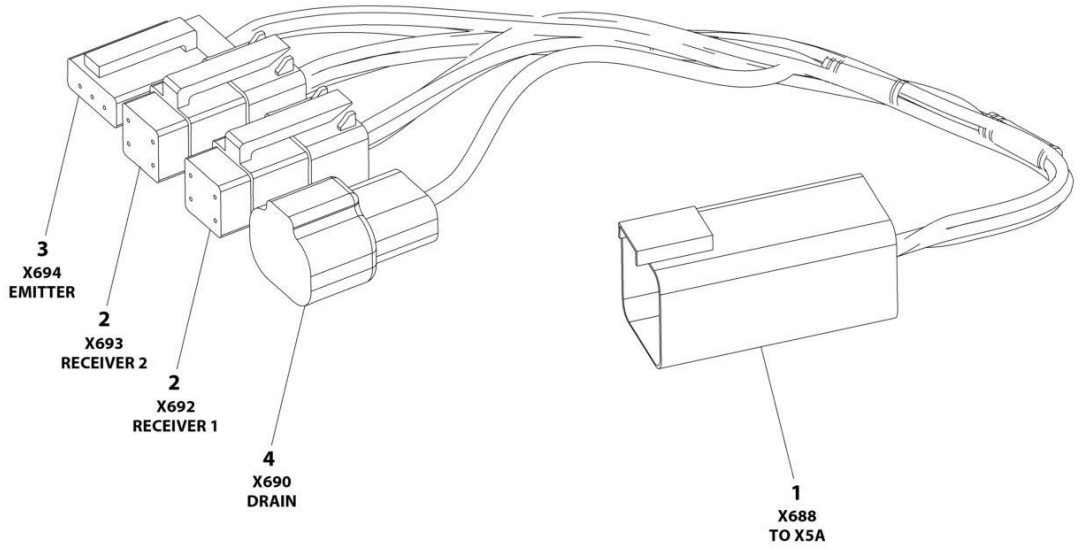

ART_1001237865

FIGURE 8-61. SKYEYE INTERMEDIATE HARNESS

ITEM	PART NUMBER	QTY	DESCRIPTION	REV
	1001237865	Ref	SKYEYE INTERMEDIATE HARNESS	A
1	4460899	1	Connector - 6 Position	
1	4460943	4	Pin, Male	
1	4460466	2	Plug, Terminal	
2	4461077	2	Connector - 4 Position	
2	1001119619	8	Socket, Female	
3	4460911	1	Connector - 3 Position	
3	1001119619	3	Socket, Female	
4	1001187681	1	Connector - 2 Position	
4	4460941	1	Pin, Male	
4	4460466	1	Plug, Terminal	

FIGURE 8-62. SKYEYE RECEIVER HARNESS

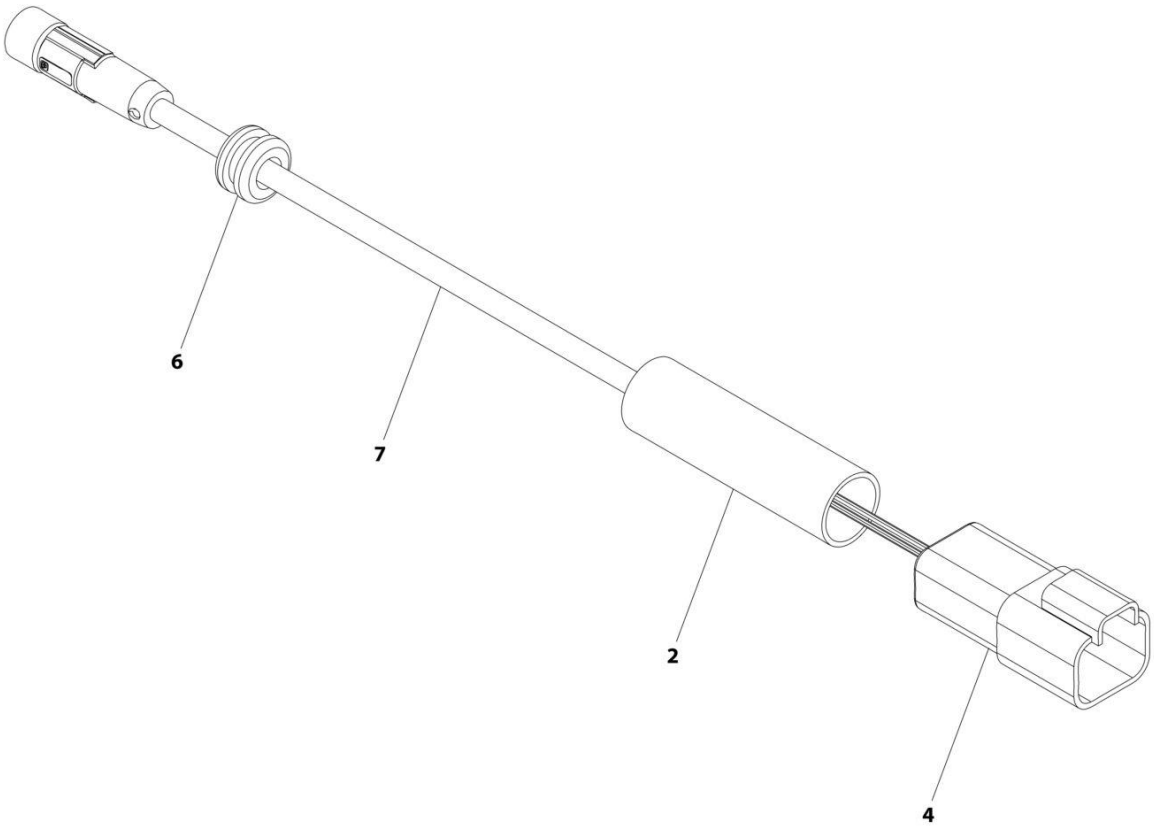

ART_1001237863

FIGURE 8-62. SKYEYE RECEIVER HARNESS

ITEM	PART NUMBER	QTY	DESCRIPTION	REV
	1001237863	Ref	SKYEYE RECEIVER HARNESS	A
2	2820247	AR	Tubing, Heat Shrink	
4	1001097051	1	Connector - 4 Position	
4	1001119620	4	Pin, Male	
6	1001227996	1	Grommet	
7	1001237862	1	Cable, M8 Female Cordset	

FIGURE 8-63. SKYLINE HARNESS

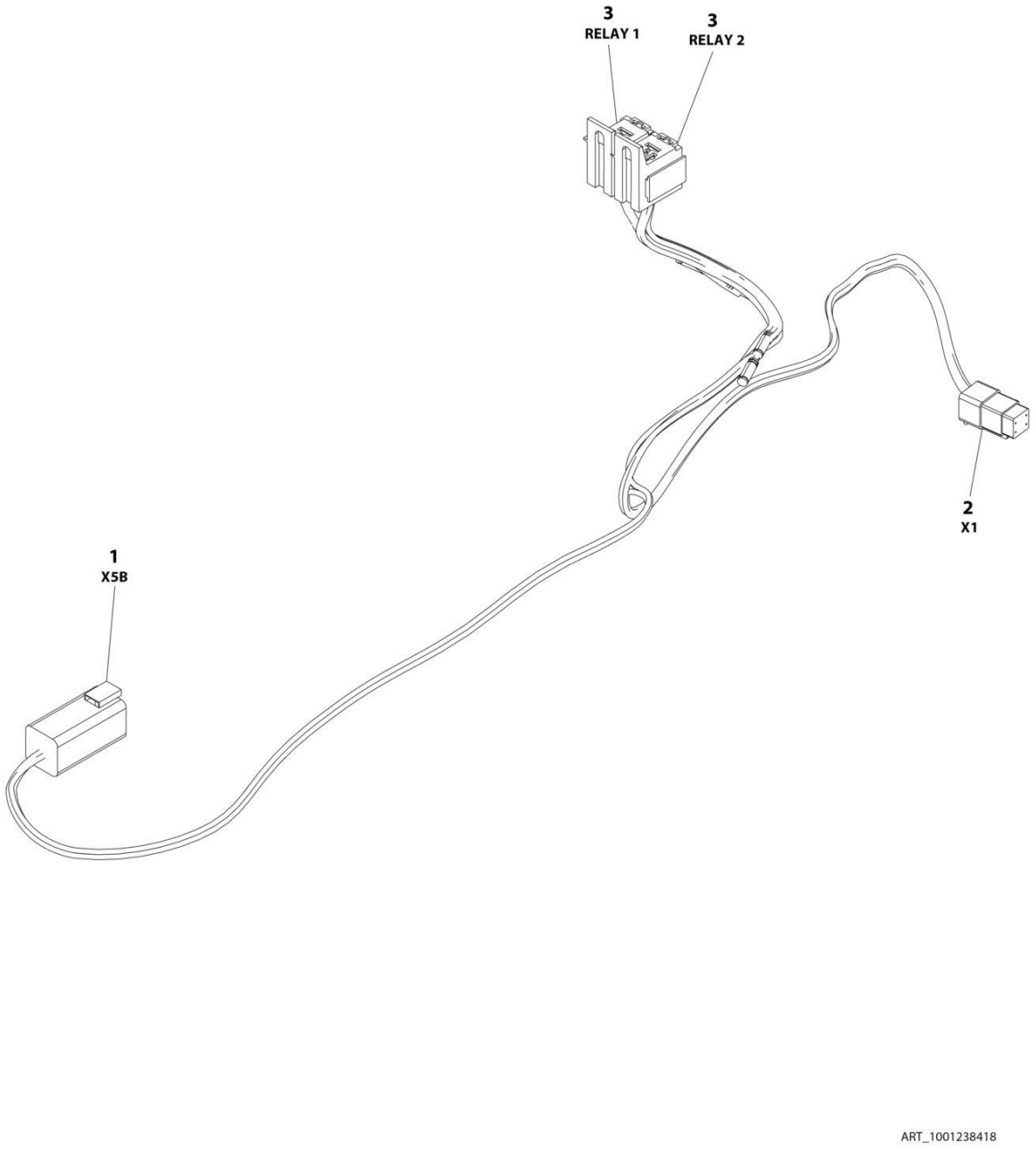

FIGURE 8-63. SKYLINE HARNESS

ITEM	PART NUMBER	QTY	DESCRIPTION	REV
	1001238418	Ref	SKYLINE HARNESS	B
1	4460899	1	Connector - 6 Position	
1	4460464	4	Pin, Male	
1	4460466	2	Plug, Terminal	
2	4461077	1	Connector - 4 Position	
2	1001126009	4	Socket, Female	
3	1001186432	2	Plug, Relay	
3	1001118388	5	Terminal	
3	1001118384	3	Terminal	
3	3740086	2	Relay	

FIGURE 8-64. SKYGUARD INTERFACE HARNESS

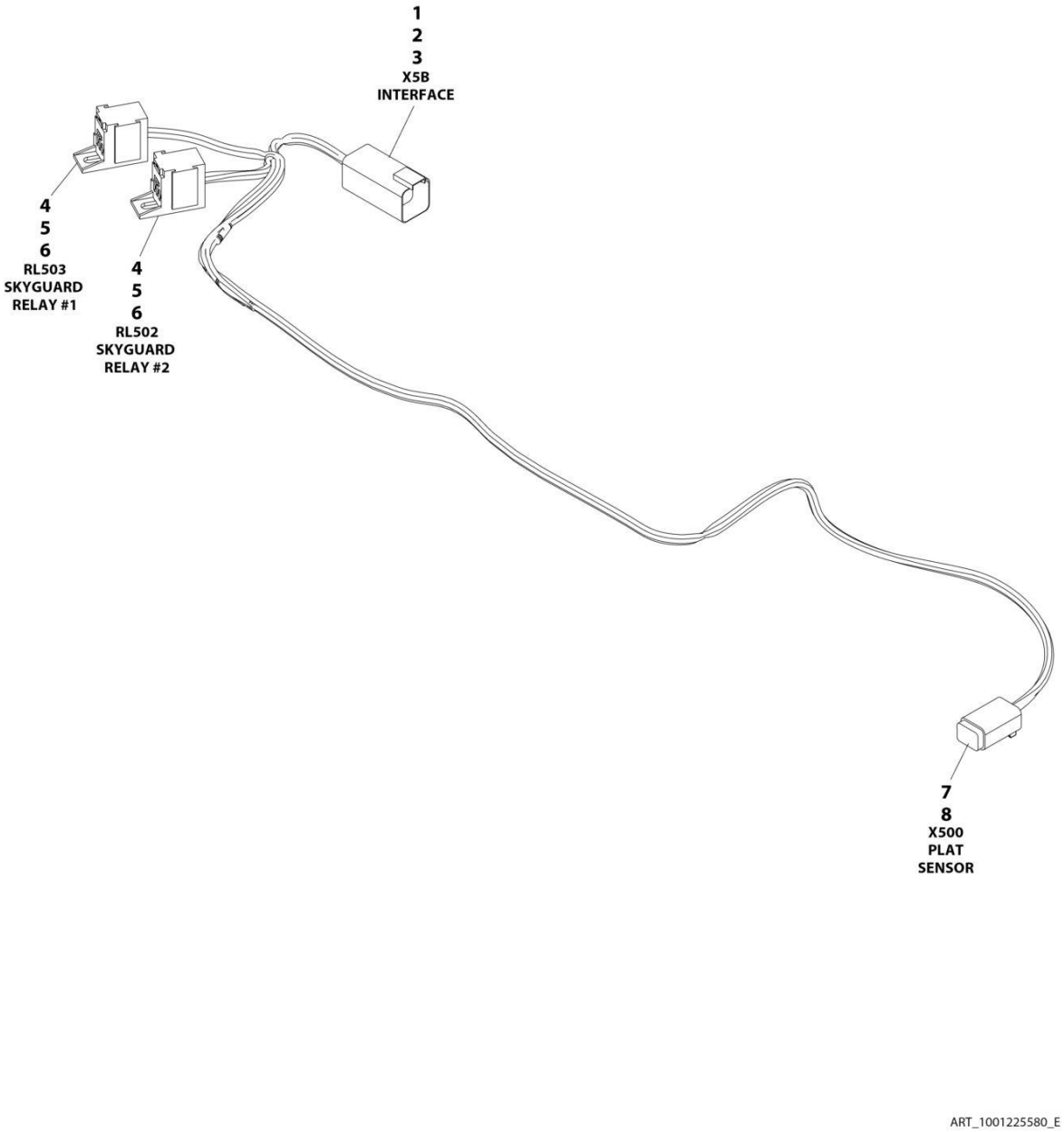

FIGURE 8-64. SKYGUARD INTERFACE HARNESS

ITEM	PART NUMBER	QTY	DESCRIPTION	REV
	1001225580	Ref	PLATFORM INTERFACE HARNESS - WITH 1 CELL LSS	E
1	4460899	1	Connector	
2	4460464	4	Terminal	
3	4460466	2	Plug	
4	1001186432	2	Connector	
5	1001253375	4	Terminal	
6	1001104519	4	Terminal	
7	4460884	1	Connector	
8	4460465	4	Terminal	

FIGURE 8-65. TOWER STOW HARNESS

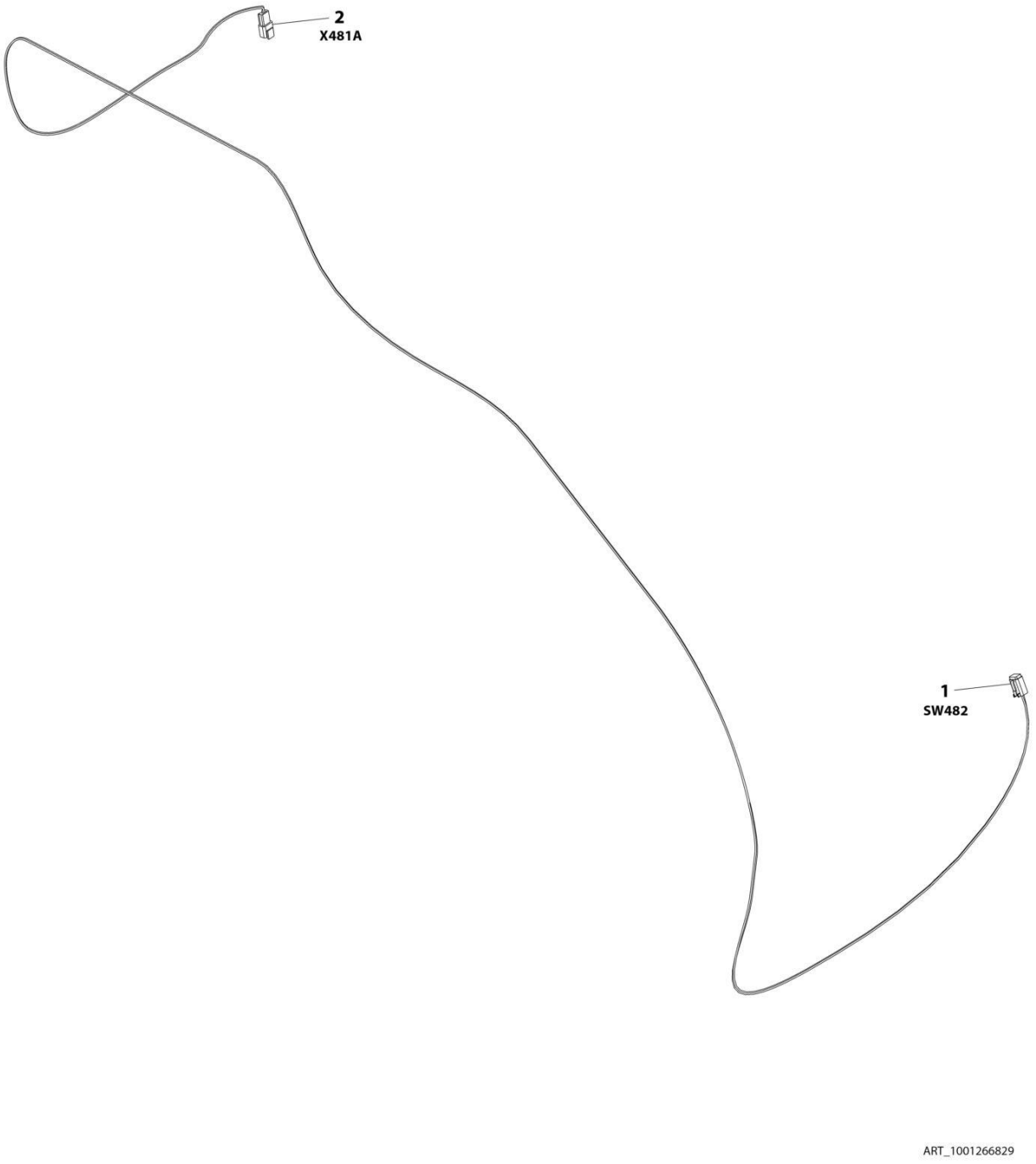

FIGURE 8-65. TOWER STOW HARNESS

ITEM	PART NUMBER	QTY	DESCRIPTION	REV
	1001266829	Ref	TOWER STOW HARNESS	A
1	4460884	1	Connector	
1	4460465	2	Socket, Female	
1	4460466	2	Plug	
2	4460910	1	Connector	
2	1001116695	2	Pin	
2	4460518	1	Plug	

FIGURE 8-66. VALVE HARNESS

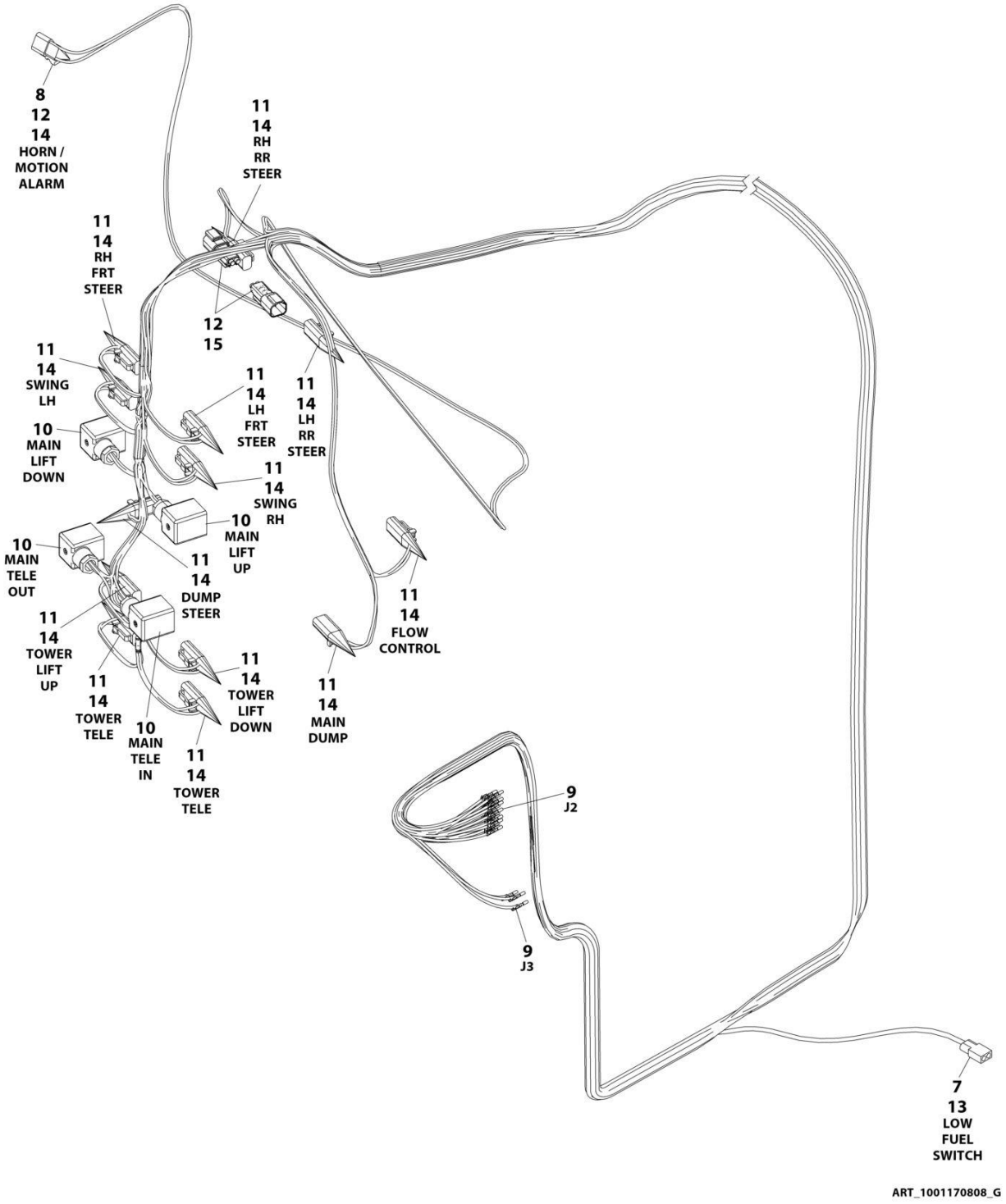

FIGURE 8-66. VALVE HARNESS

ITEM	PART NUMBER	QTY	DESCRIPTION	REV
	1001170808	Ref	VALVE HARNESS	G
7	4460268	2	Socket, Female	
8	4460539	1	Plug, Male - 3 Position	
9	4460871	27	Socket, Female	
10	1001263923	4	Connector, Din	
11	4460891	13	Plug, Male - 2 Position	
12	4460466	5	Plug, Terminal	
13	4460424	1	Receptacle, Female - 2 Position	
14	4460465	28	Socket, Female	
15	4460897	2	Receptacle, Female - 2 Position	

FIGURE 8-67. WHITE NOISE ALARM HARNESS

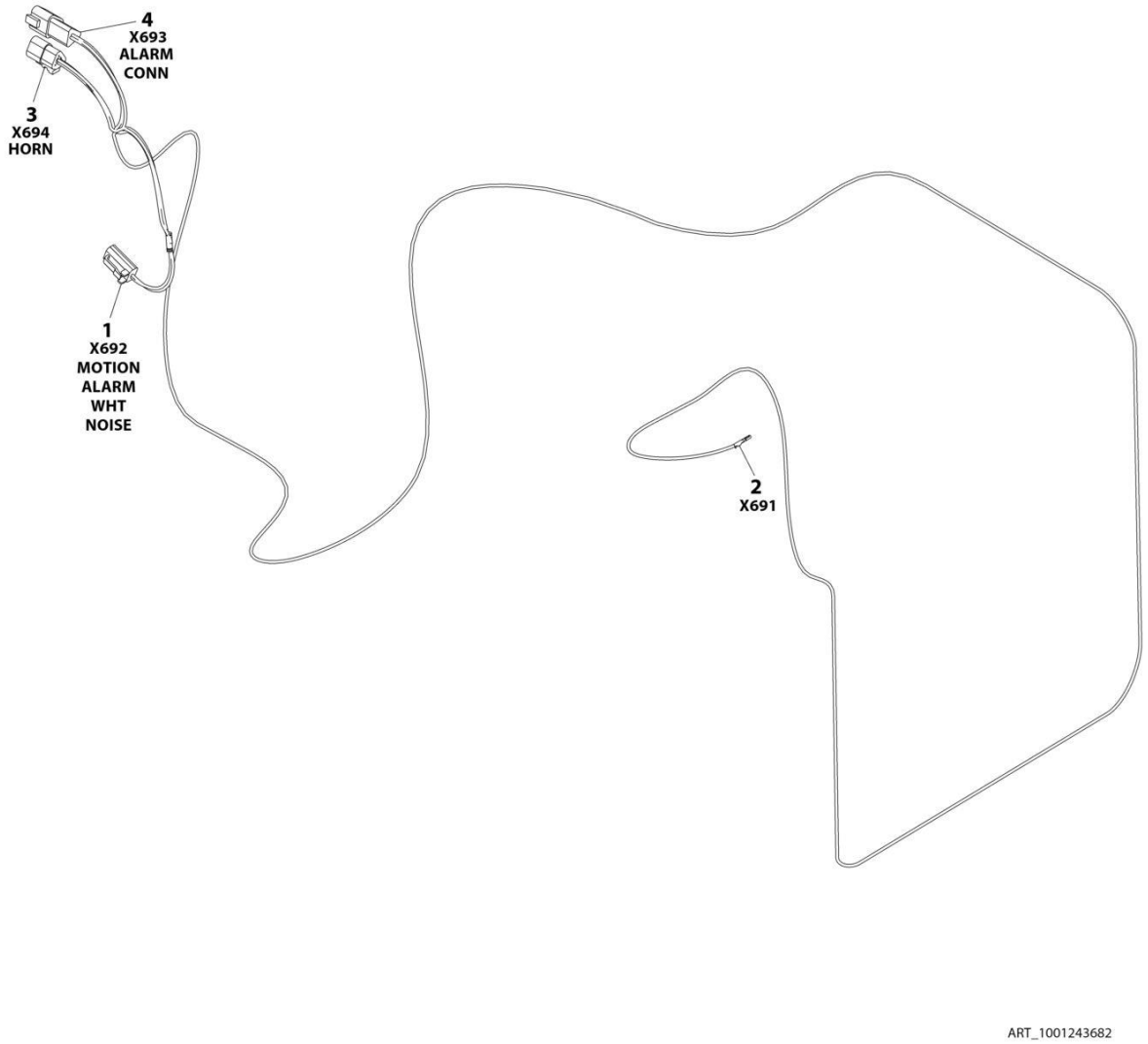

FIGURE 8-67. WHITE NOISE ALARM HARNESS

ITEM	PART NUMBER	QTY	DESCRIPTION	REV
	1001243682	Ref	WHITE NOISE ALARM HARNESS	A
1	4460891	1	Plug, Male - 2 Position	
1	4460465	2	Socket, Female	
2	4460871	1	Terminal	
3	4460539	1	Plug, Male- 3 Position	
3	4460465	3	Socket, Female	
4	4460536	1	Receptacle, Female- 3 Position	
4	4460464	3	Pin, Male	

SECTION 9 - DECALS

FIGURE 9-1. DECAL INSTALLATION (ANSI SPECS)

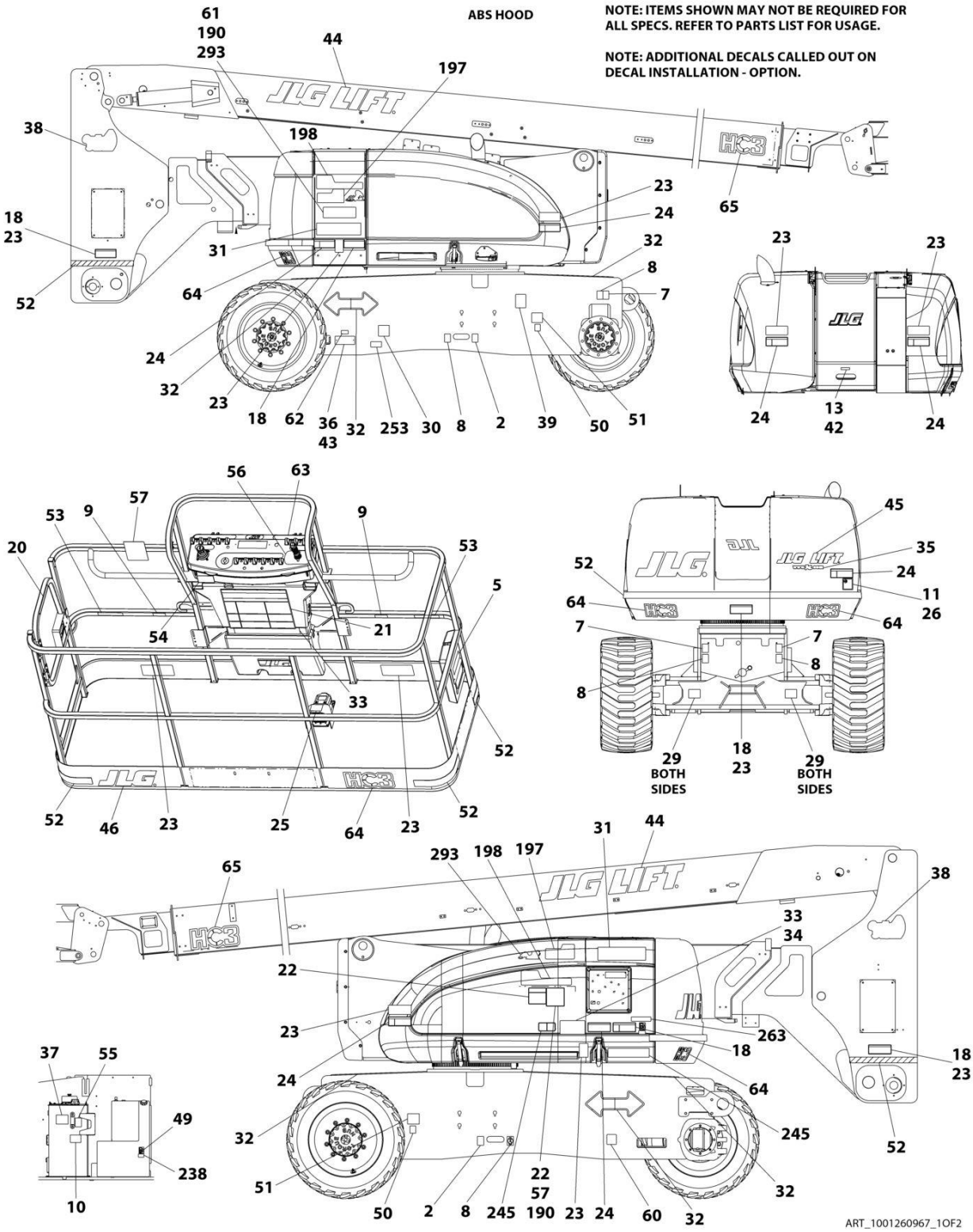

STEEL HOOD

NOTE: ITEMS SHOWN MAY NOT BE REQUIRED FOR ALL SPECS. REFER TO PARTS LIST FOR USAGE.

NOTE: ADDITIONAL DECALS CALLED OUT ON DECAL INSTALLATION - OPTION.

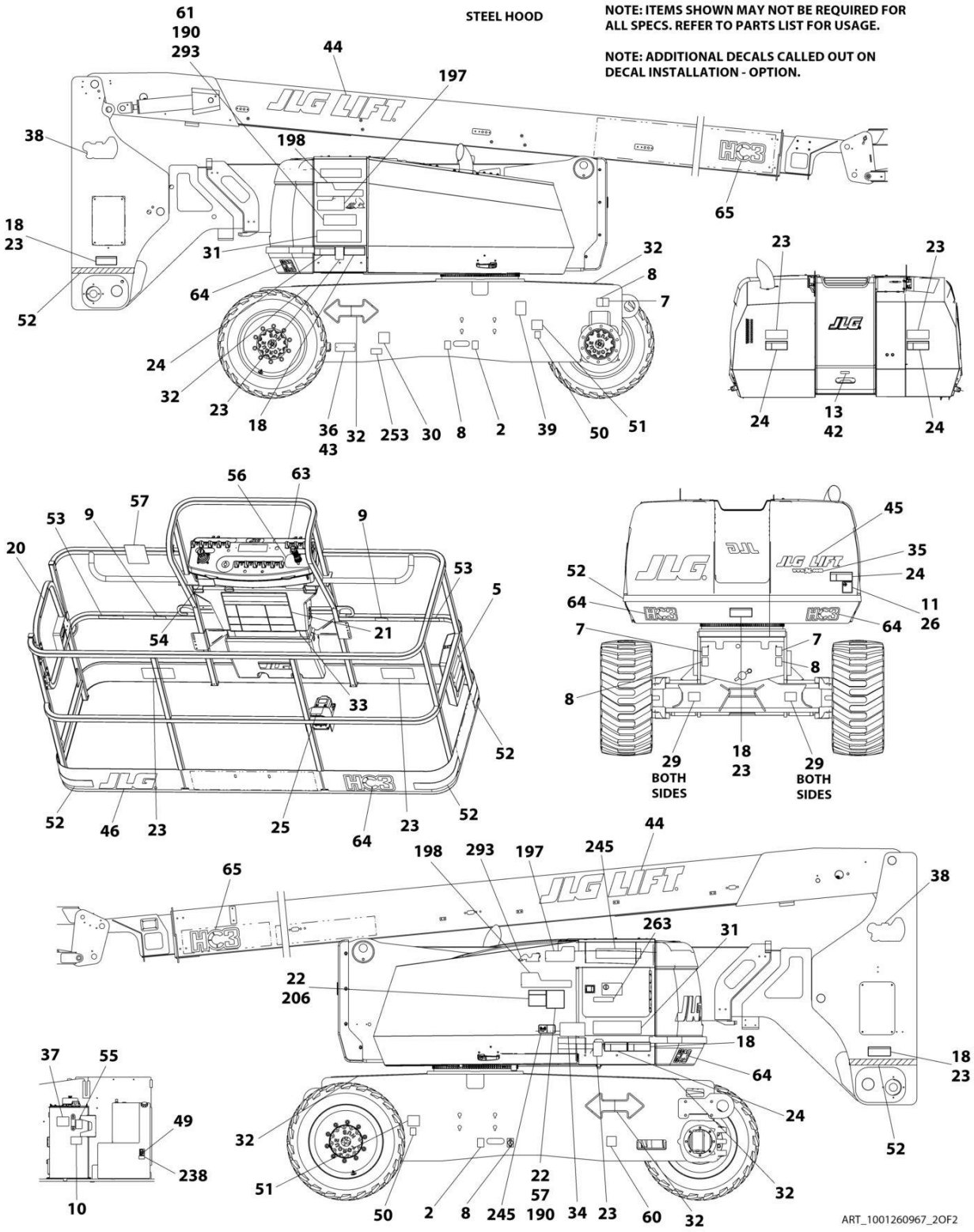

FIGURE 9-1. DECAL INSTALLATION (ANSI SPECS)

ITEM	PART NUMBER	QTY	DESCRIPTION	REV
	1001260967	Ref	DECAL INSTALLATION	E
	1001260969	Ref	REFERENCE CHART	B
2	1701499	2	Decal - No Lifting	
5	1701509	1	Decal - Manual	
7	1703811	4	Decal - Lifting Lug	
8	1703814	6	Decal - Tie Down	
9	1704277	3	Decal - Lanyard Attach Graphic	
10	1704412	1	Decal - Hydraulic Oil Chart	
13	3251243	1	Nameplate - 120V-60Hz	
18	1703953	5	Decal - Warning Crushing	
20	1702868	2	Decal - No Hands	
21	1703797	1	Decal - Warning/Danger	
22	1705336	1	Decal - Warning Inspection	
23	1703804	4	Decal - Warning Crushing	
24	1703805	5	Decal - Danger Electrocution	
25	3252347	1	Decal - Footswitch	
29	1703482	4	Decal - Maximum Tire Load	
30	See Note	NSS	Decal - Bar Code (Note: Not Available for Purchase)	
31	1001267312	2	Decal - 800AJ	
32	1701501	4	Decal - Arrow	
33	1001234425	1	Decal - Warning Maximum Capacity	
34	1001234426	1	Decal - Warning Maximum Capacity	
37	1001096141	1	Decal - Upright Level Override	
38	1703959	2	Decal - Quick Stick	
39	1001131269	1	Decal - Patent	
43	3820001	2	Rivet	
52	4420051	23 ft /7m	Tape, Safety	
56	1705351	1	Decal - Drive/Steer Instructions	
60	1001223055	1	Decal - Yearly Inspection	
61	1001263941	1	Decal - Lift Diagram	
62	1001223453	1	Decal - ICES	
63	1001131168	1	Decal - Stop	

FIGURE 9-2. DECAL INSTALLATION (AUSTRALIAN SPECS)

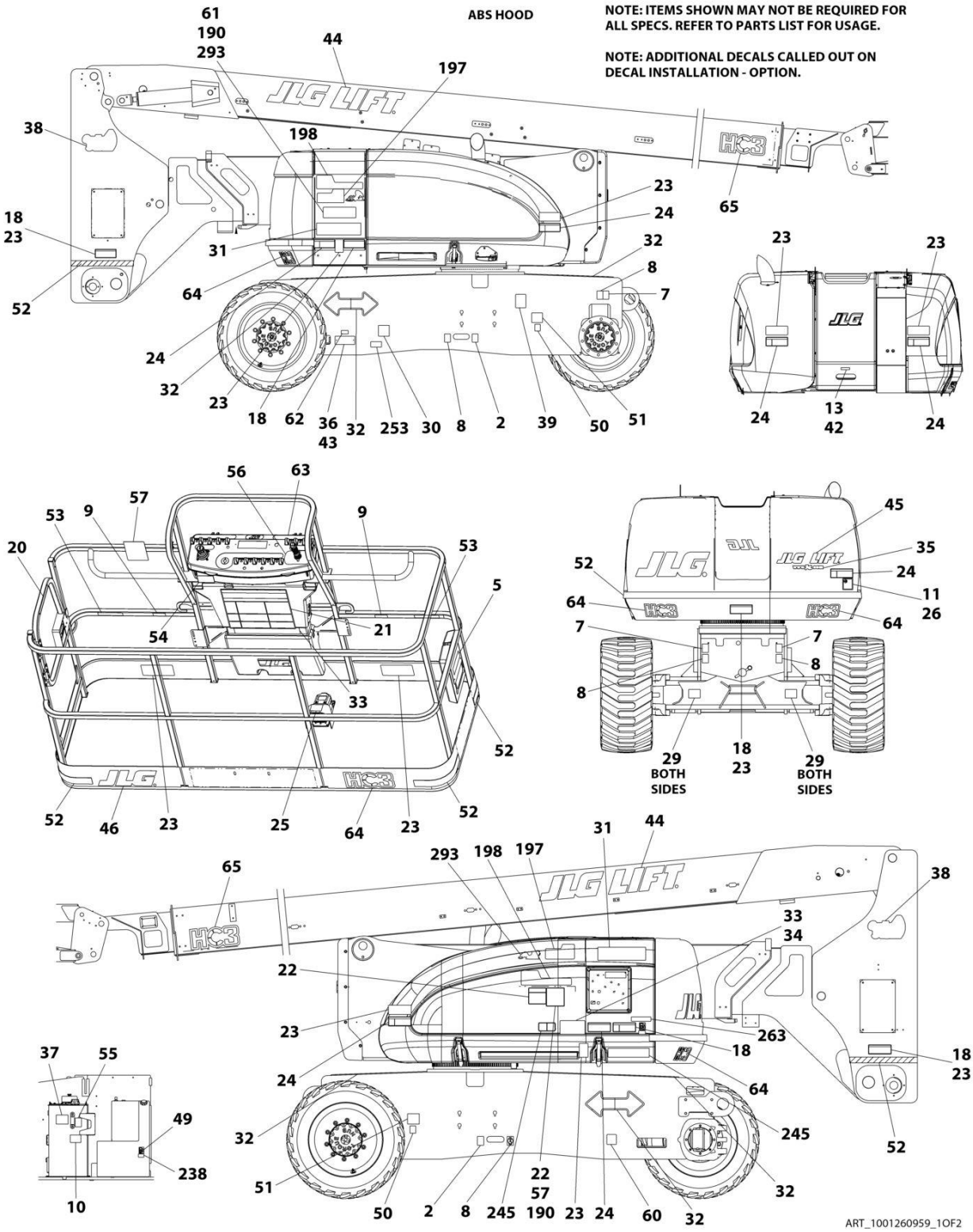

STEEL HOOD

NOTE: ITEMS SHOWN MAY NOT BE REQUIRED FOR ALL SPECS. REFER TO PARTS LIST FOR USAGE.

NOTE: ADDITIONAL DECALS CALLED OUT ON DECAL INSTALLATION - OPTION.

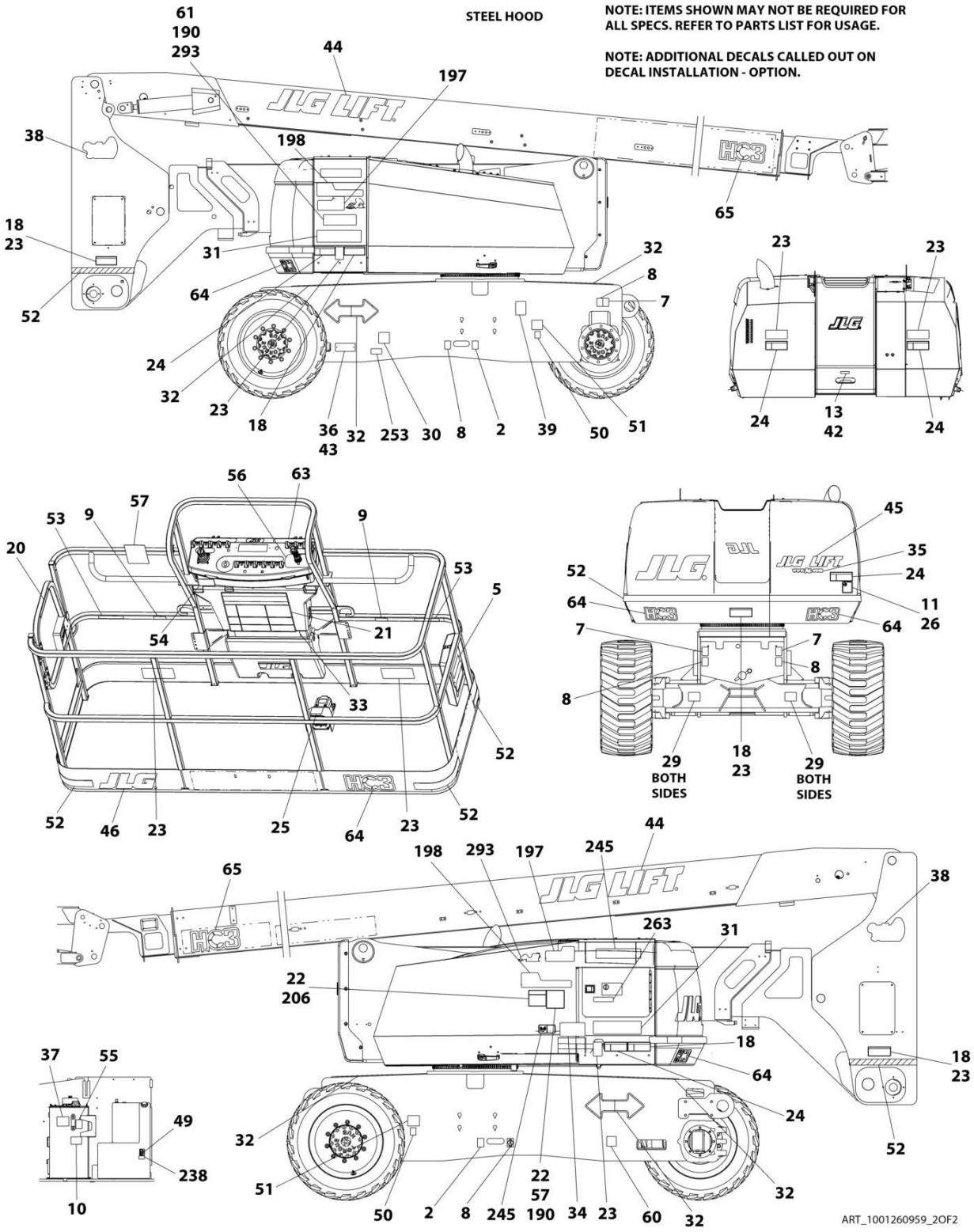

FIGURE 9-2. DECAL INSTALLATION (AUSTRALIAN SPECS)

ITEM	PART NUMBER	QTY	DESCRIPTION	REV
	1001260959	Ref	DECAL INSTALLATION	D
	1001260969	Ref	REFERENCE CHART	B
2	1701499	2	Decal - No Lifting	
5	1701509	1	Decal - Manual	
7	1703811	4	Decal - Lifting Lug	
8	1703814	6	Decal - Tie Down	
9	1704277	3	Decal - Lanyard Attach Graphic	
10	1704412	1	Decal - Hydraulic Oil Chart	
21	1705921	1	Decal - Tipping	
22	1705822	1	Decal - Danger	
23	1701518	9	Decal - Warning Crushing	
24	1705961	5	Decal - Danger Electrocution	
25	1705828	1	Decal - Footswitch	
29	1703482	4	Decal - Maximum Tire Load	
30	See Note	NSS	Decal - Bar Code (Note: Not Available for Purchase)	
31	1001267312	2	Decal - 800AJ	
32	1701501	4	Decal - Arrow	
33	1001234439	2	Decal - Warning Maximum Capacity	
37	1705977	1	Decal - Upright Level	
38	1703959	2	Decal - Quick Stick	
43	3820001	2	Rivet	
52	4420051	23 ft /7m	Tape, Safety	
57	1001112551	1	Decal - Emergency Control	
61	1001263941	1	Decal - Lift Diagram	
63	1001184618	1	Decal - Stop	

FIGURE 9-3. DECAL INSTALLATION (BRAZILIAN SPECS)

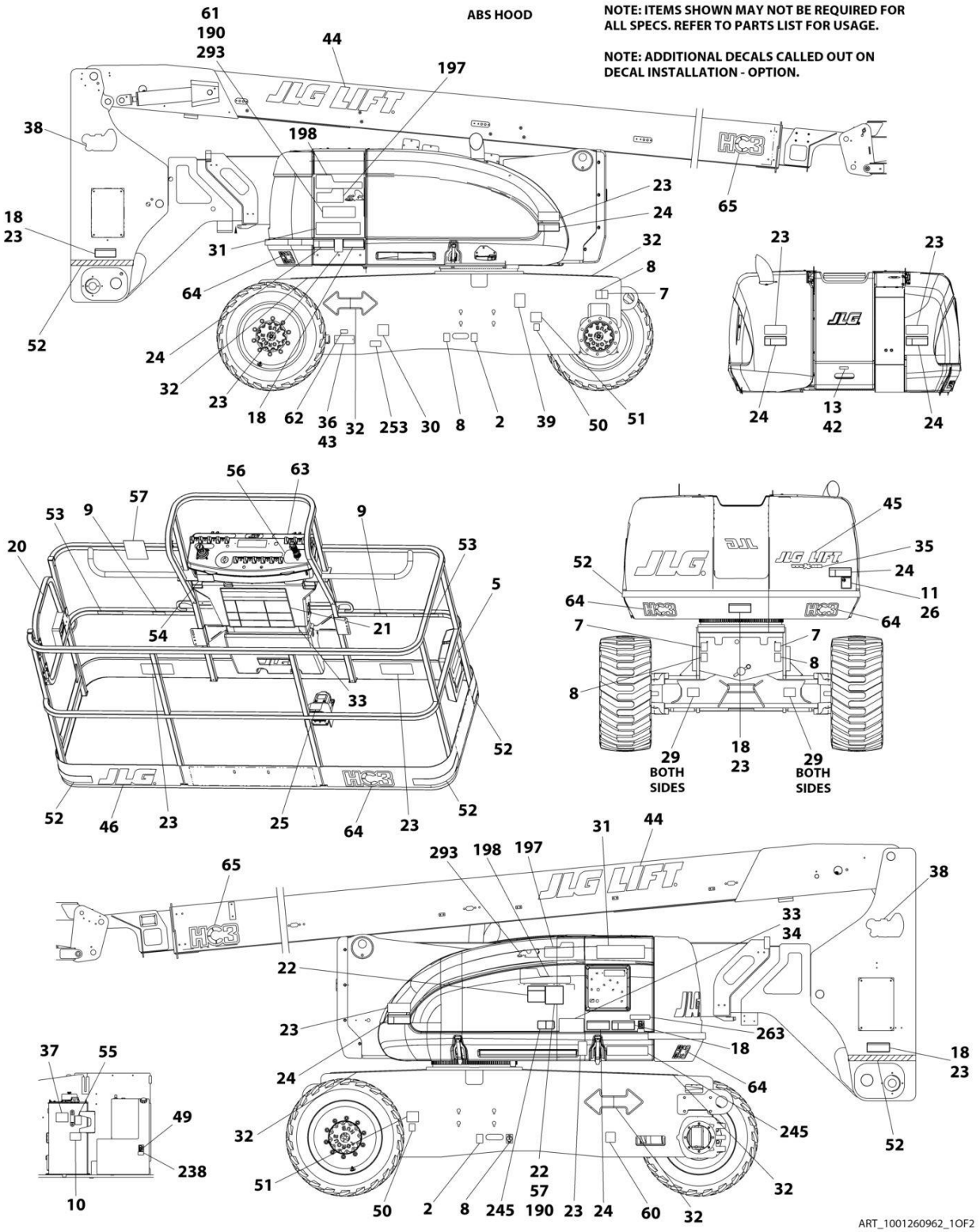

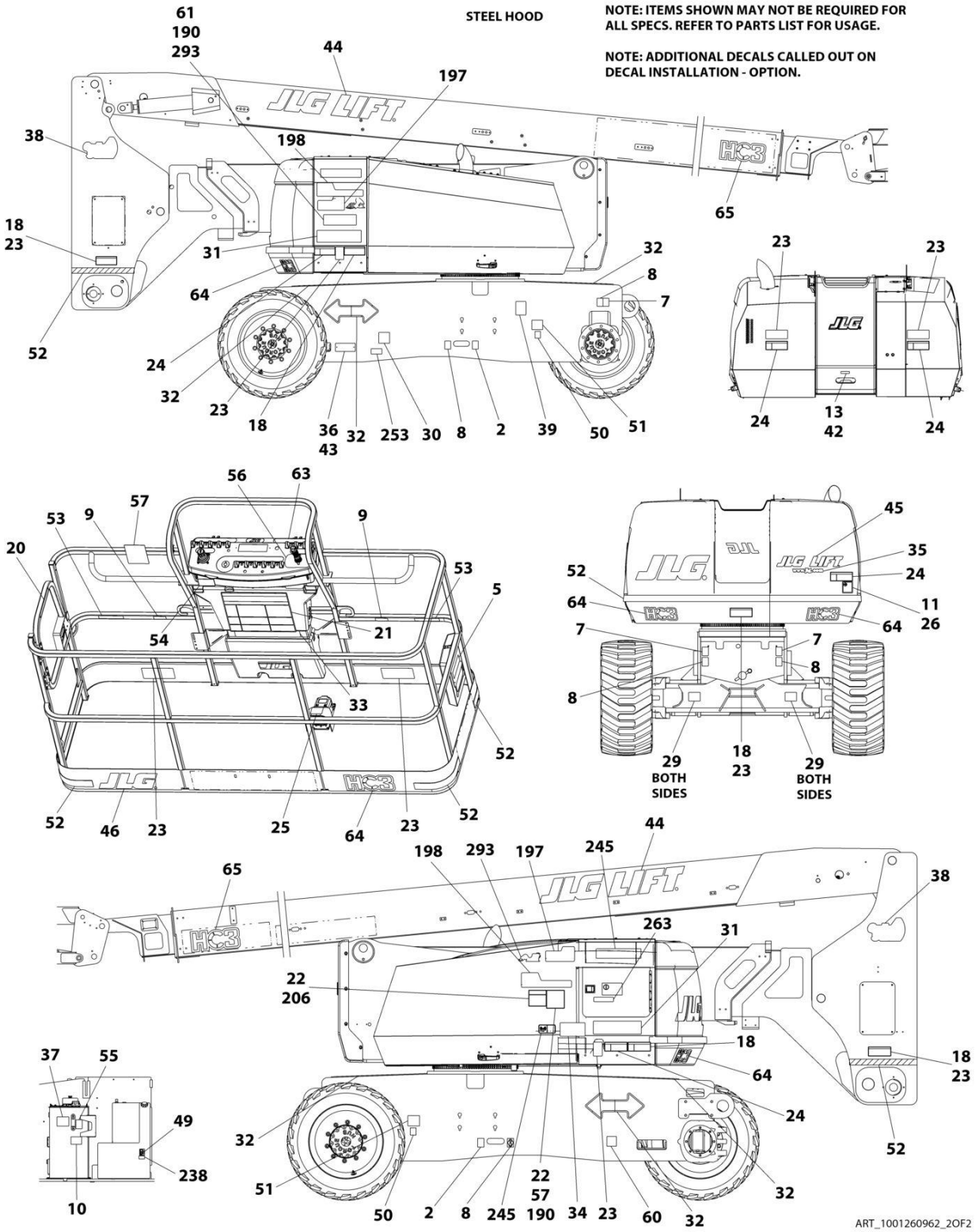
STEEL HOOD
NOTE: ITEMS SHOWN MAY NOT BE REQUIRED FOR ALL SPECS. REFER TO PARTS LIST FOR USAGE.
NOTE: ADDITIONAL DECALS CALLED OUT ON DECAL INSTALLATION - OPTION.
61
190
293
44
197
38
198
65
18
23
31
32
8
7
64
52
24
32
23
18
36
43
32
253
30
8
2
39
50
51
23
23
24
13
42
24
56
63
57
53
9
9
20
53
5
54
21
33
52
52
46
23
25
64
23
52
45
35
24
52
64
11
26
64
7
7
8
8
29
BOTH SIDES
18
23
29
BOTH SIDES
44
198
293
197
245
65
38
263
31
22
206
18
64
37
55
18
23
49
24
32
238
52
51
22
57
190
34
23
60
32
32
10
50
2
8
245
ART_1001260962_2OF2

FIGURE 9-3. DECAL INSTALLATION (BRAZILIAN SPECS)

ITEM	PART NUMBER	QTY	DESCRIPTION	REV
	1001260962	Ref	DECAL INSTALLATION	D
	1001260969	Ref	REFERENCE CHART	B
2	1701499	2	Decal - No Lifting	
5	1701509	1	Decal - Manual	
7	1703811	4	Decal - Lifting Lug	
8	1703814	6	Decal - Tie Down	
9	1704277	3	Decal - Lanyard Attach Graphic	
10	1704412	1	Decal - Hydraulic Oil Chart	
18	1703943	5	Decal - Warning Crushing	
20	1705967	2	Decal - No Hands	
21	1705895	1	Decal - Warning/Danger	
22	1705896	1	Decal - Warning Inspection	
23	1705898	4	Decal - Warning Crushing	
24	1705897	5	Decal - Danger Electrocution	
25	1705902	1	Decal - Footswitch	
29	1703482	4	Decal - Maximum Tire Load	
30	See Note	NSS	Decal - Bar Code (Note: Not Available for Purchase)	
31	1001267312	2	Decal - 800AJ	
32	1701501	4	Decal - Arrow	
33	1001234437	1	Decal - Warning Maximum Capacity	
34	1001234438	1	Decal - Warning Maximum Capacity	
37	1705977	1	Decal - Upright Level	
38	1703959	2	Decal - Quick Stick	
43	3820001	2	Rivet	
52	4420051	23 ft /7m	Tape, Safety	
56	1705905	1	Decal - Drive/Steer	
60	1001224052	1	Decal - Yearly Inspection	
61	1001263941	1	Decal - Lift Diagram	
63	1001184618	1	Decal - Stop	

FIGURE 9-4. DECAL INSTALLATION (CE & UK CA SPECS)

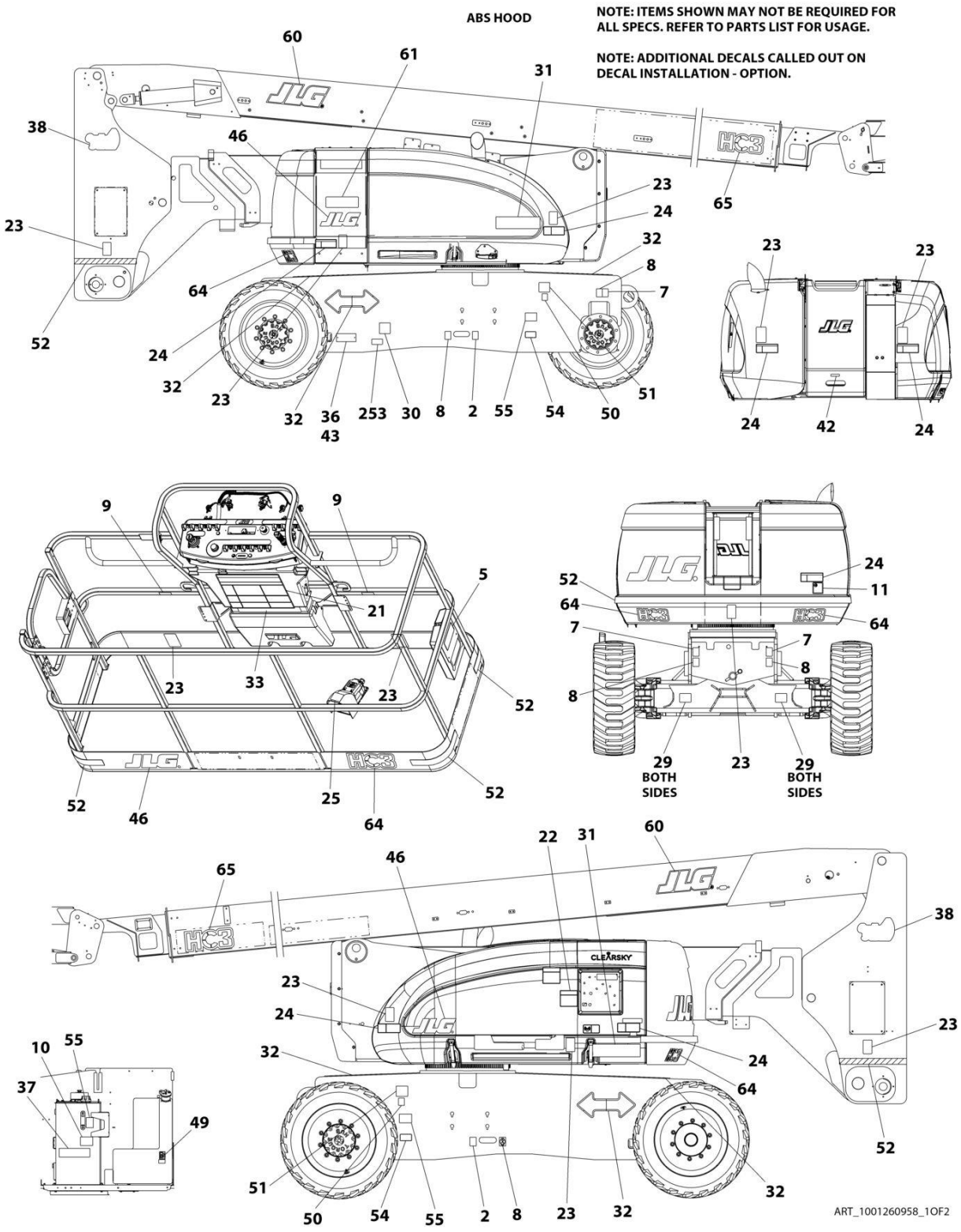

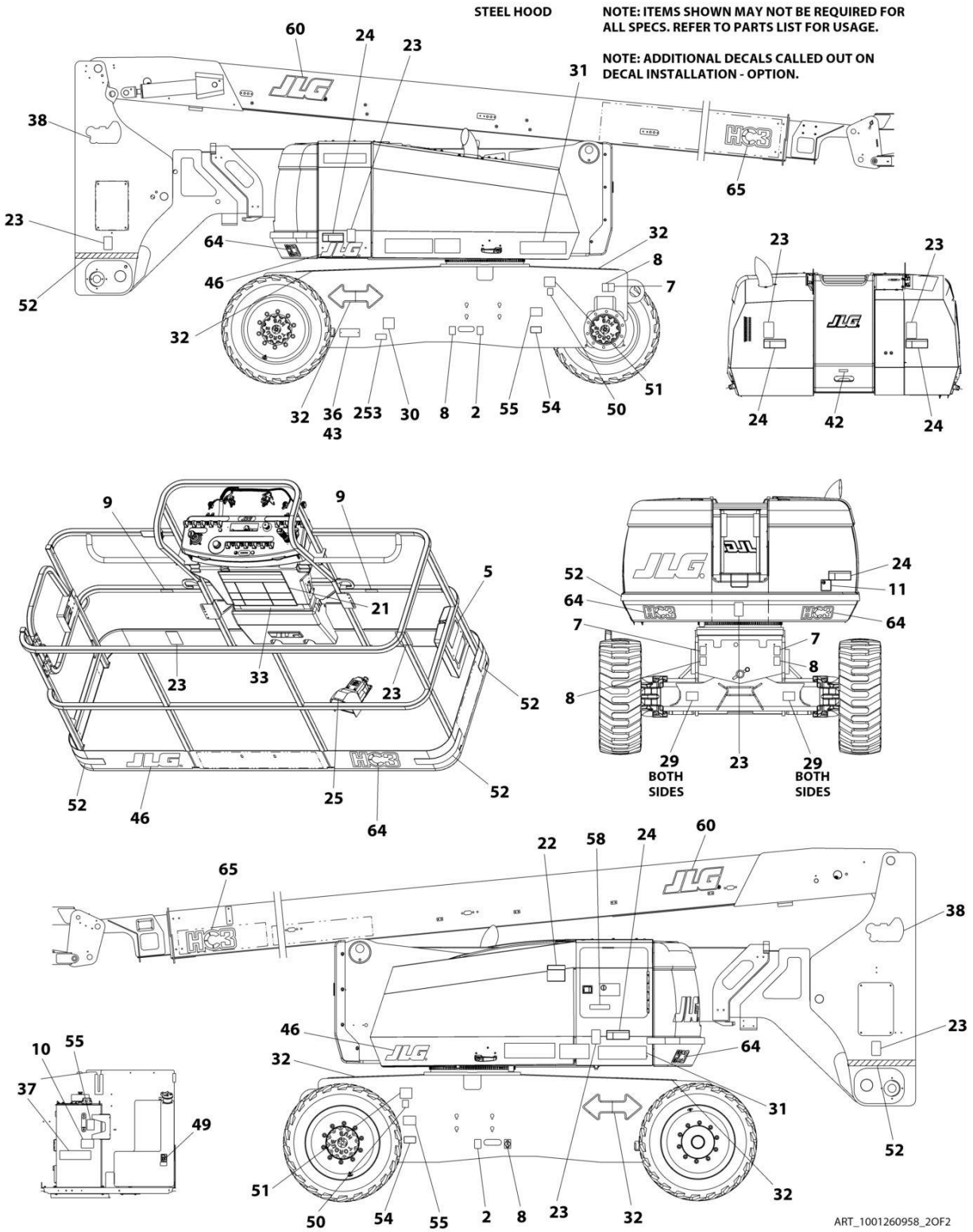
STEEL HOOD
NOTE: ITEMS SHOWN MAY NOT BE REQUIRED FOR ALL SPECS. REFER TO PARTS LIST FOR USAGE.
NOTE: ADDITIONAL DECALS CALLED OUT ON DECAL INSTALLATION - OPTION.
60
24
23
31
38
65
23
64
32
8
7
46
52
32
51
32
36
43
253
30
8
2
55
54
50
23
23
24
42
24
9
9
5
21
23
33
23
52
52
46
25
52
64
52
24
11
64
64
7
7
8
8
29
BOTH SIDES
23
29
BOTH SIDES
22
58
24
60
65
38
46
64
23
10
55
32
37
31
49
52
51
32
50
54
55
2
8
23
32
ART_1001260958_2OF2

FIGURE 9-4. DECAL INSTALLATION (CE & UK CA SPECS)

ITEM	PART NUMBER	QTY	DESCRIPTION	REV
	1001260958	Ref	DECAL INSTALLATION	D
	1001260968	Ref	REFERENCE CHART	B
2	1701499	2	Decal - No Lifting	
5	1701509	1	Decal - Manual	
7	1703811	4	Decal - Lifting Lug	
8	1703814	6	Decal - Tie Down	
9	1704277	3	Decal - Lanyard Attach Graphic	
10	1704412	1	Decal - Hydraulic Oil Chart	
21	1705921	1	Decal - Tipping	
22	1705822	1	Decal - Danger	
23	1701518	9	Decal - Warning Crushing	
24	1705961	5	Decal - Danger Electrocution	
25	1705828	1	Decal - Footswitch	
29	1703482	4	Decal - Maximum Tire Load	
30	See Note	NSS	Decal - Bar Code (Note: Not Available for Purchase)	
31	1001267312	2	Decal - 800AJ	
32	1701501	4	Decal - Arrow	
33	1001234439	1	Decal - Warning Maximum Capacity	
37	1705977	1	Decal - Upright Level	
38	1703959	2	Decal - Quick Stick	
43	3820001	2	Rivet	
52	4420051	23 ft /7m	Tape, Safety	
61	1001263941	1	Decal - Lift Diagram	
63	1001184618	1	Decal - Stop	

FIGURE 9-5. DECAL INSTALLATION (CHINA SPECS)

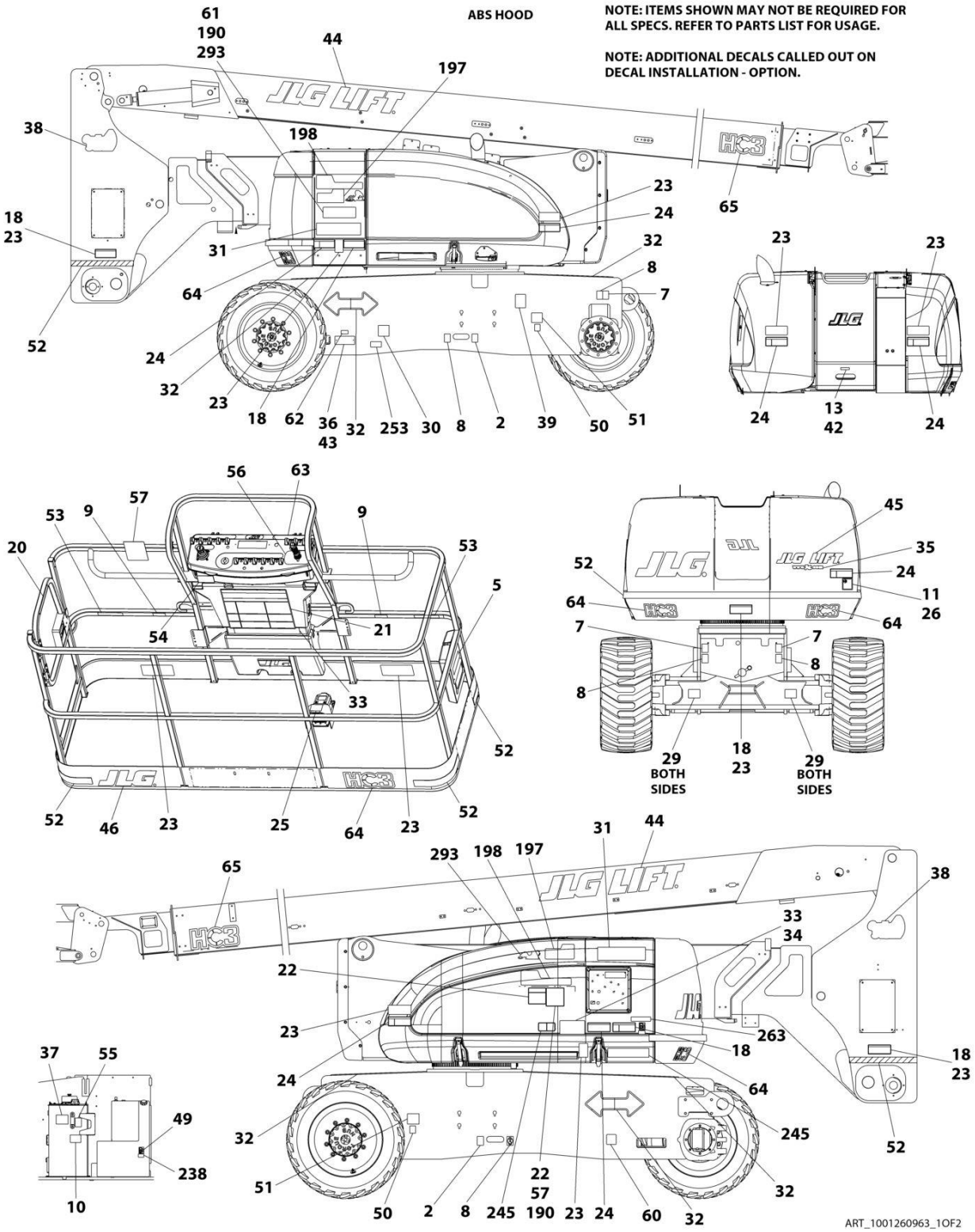

STEEL HOOD

NOTE: ITEMS SHOWN MAY NOT BE REQUIRED FOR ALL SPECS. REFER TO PARTS LIST FOR USAGE.

NOTE: ADDITIONAL DECALS CALLED OUT ON DECAL INSTALLATION - OPTION.

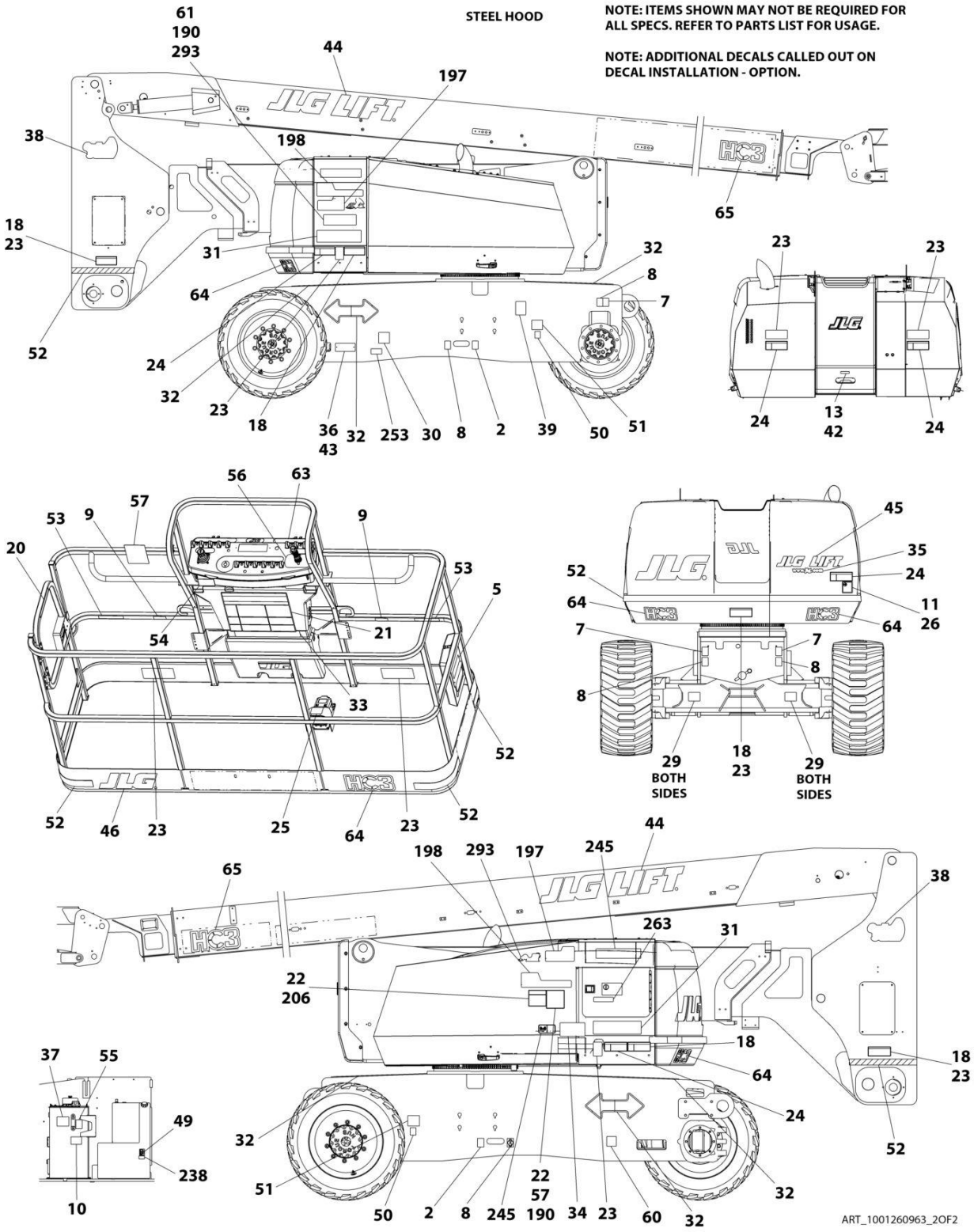

FIGURE 9-5. DECAL INSTALLATION (CHINA SPECS)

ITEM	PART NUMBER	QTY	DESCRIPTION	REV
	1001260963	Ref	DECAL INSTALLATION	D
	1001260969	Ref	REFERENCE CHART	B
2	1701499	2	Decal - No Lifting	
5	1701509	1	Decal - Manual	
7	1703811	4	Decal - Lifting Lug	
8	1703814	6	Decal - Tie Down	
9	1704277	3	Decal - Lanyard Attach Graphic	
10	1704412	1	Decal - Hydraulic Oil Chart	
18	1703943	5	Decal - Warning Crushing	
20	1705968	2	Decal - No Hands	
21	1703925	1	Decal - Warning/Danger	
22	1705348	1	Decal - Warning Inspection	
23	1703949	4	Decal - Warning Crushing	
24	1703937	5	Decal - Danger Electrocution	
25	1703982	1	Decal - Footswitch	
29	1703482	4	Decal - Maximum Tire Load	
30	See Note	NSS	Decal - Bar Code (Note: Not Available for Purchase)	
31	1001267312	2	Decal - 800AJ	
32	1701501	4	Decal - Arrow	
33	1001234435	1	Decal - Warning Maximum Capacity	
34	1001234436	1	Decal - Warning Maximum Capacity	
37	1705977	1	Decal - Upright Level	
38	1703959	2	Decal - Quick Stick	
43	3820001	2	Rivet	
52	4420051	23 ft /7m	Tape, Safety	
60	1001224050	1	Decal - Yearly Inspection	
61	1001263941	1	Decal - Lift Diagram	
63	1001184618	1	Decal - Stop	

FIGURE 9-6. DECAL INSTALLATION (CSA SPECS)

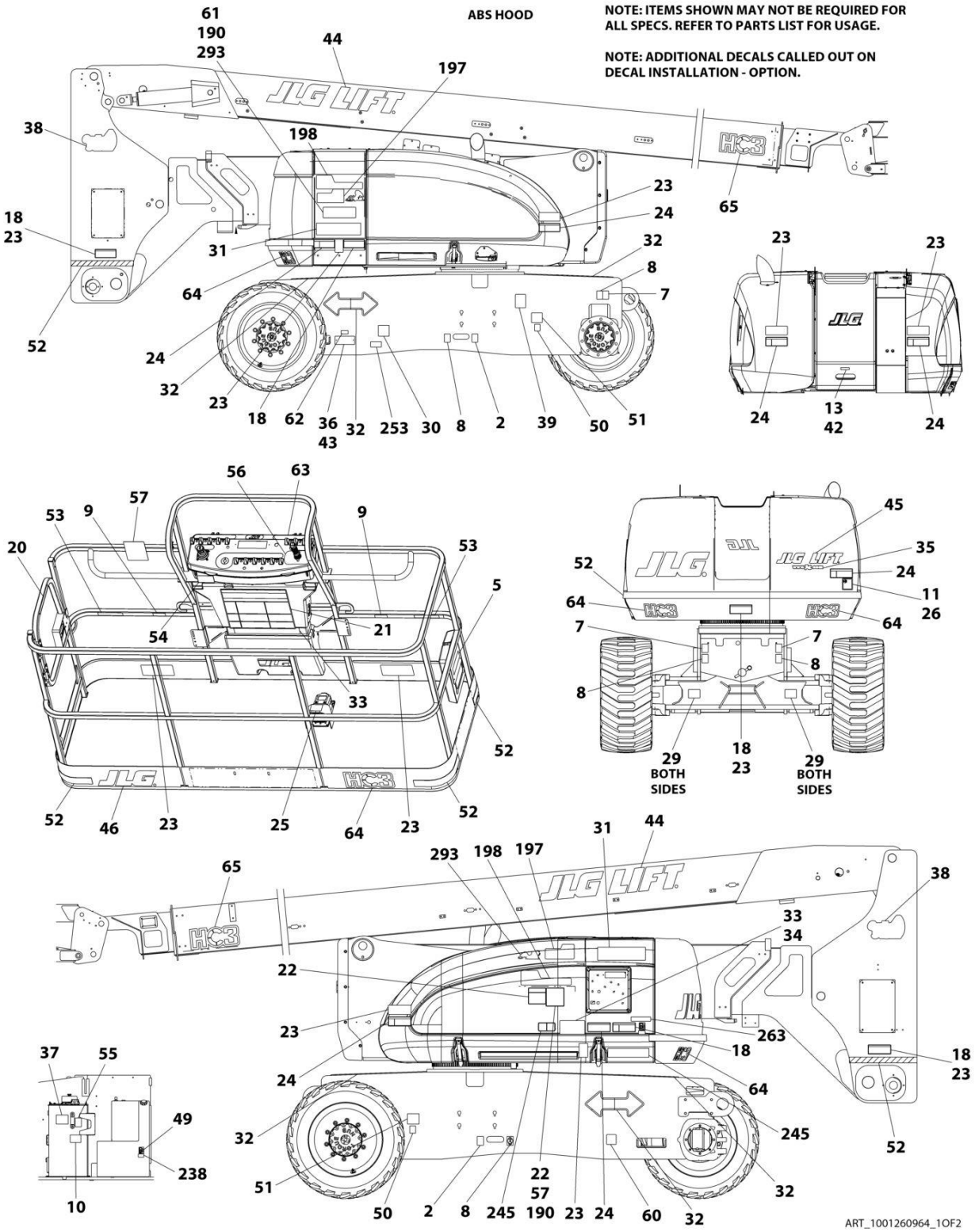

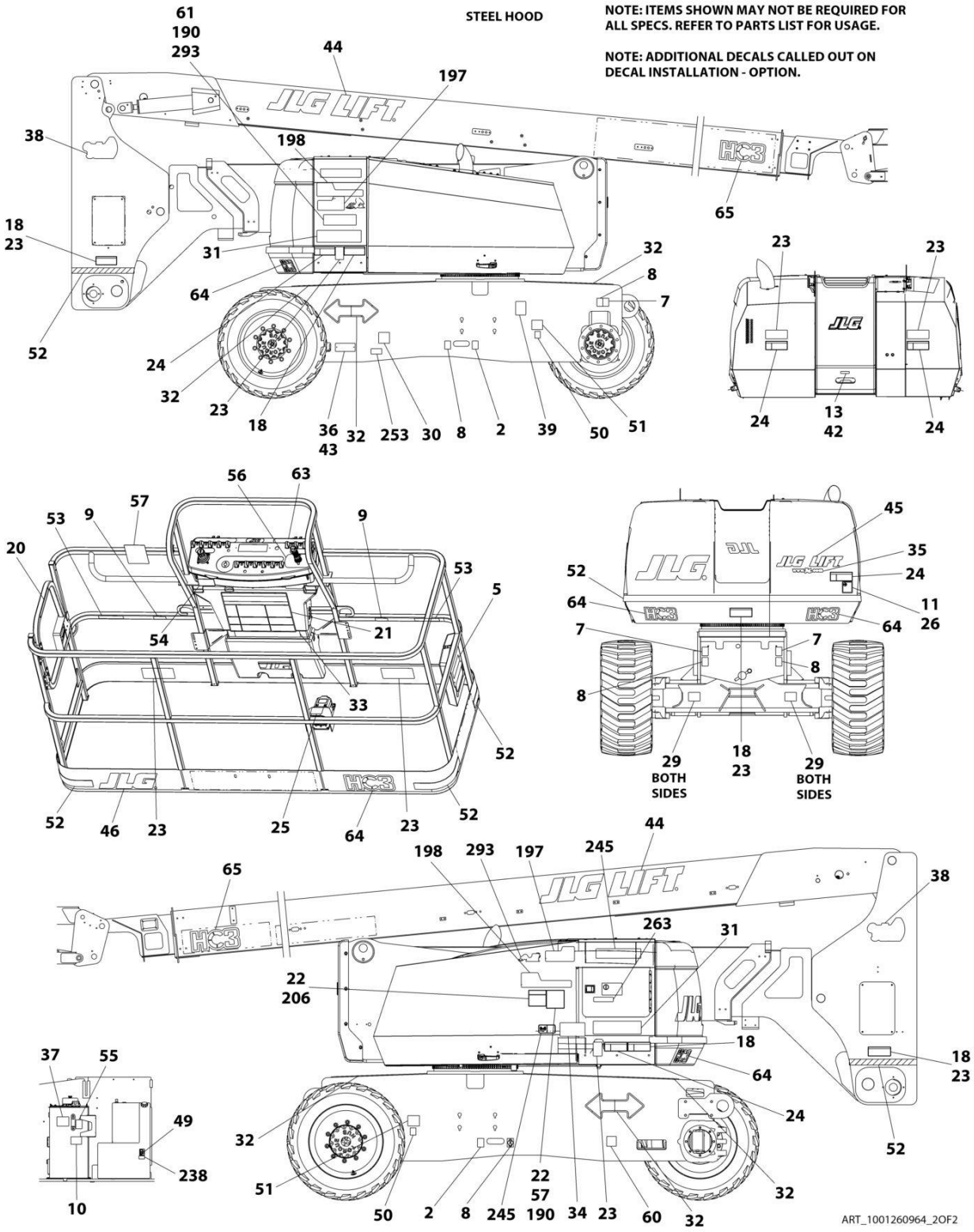
STEEL HOOD
NOTE: ITEMS SHOWN MAY NOT BE REQUIRED FOR ALL SPECS. REFER TO PARTS LIST FOR USAGE.
NOTE: ADDITIONAL DECALS CALLED OUT ON DECAL INSTALLATION - OPTION.
61
190
293
44
197
38
198
65
18
23
31
32
8
7
64
52
24
32
23
18
36
43
32
253
30
8
2
39
50
51
23
23
24
13
42
24
56
63
57
53
9
9
20
53
5
54
21
33
52
52
46
23
25
64
23
52
45
35
24
52
11
26
64
64
7
7
8
8
29
BOTH SIDES
18
23
29
BOTH SIDES
44
198
293
197
245
65
38
263
31
22
206
18
64
18
23
37
55
49
238
10
32
51
24
52
32
22
57
190
50
2
8
245
34
23
60
32
ART_1001260964_2OF2

FIGURE 9-6. DECAL INSTALLATION (CSA SPECS)

ITEM	PART NUMBER	QTY	DESCRIPTION	REV
	1001260964	Ref	DECAL INSTALLATION	D
	1001260969	Ref	REFERENCE CHART	B
2	1701499	2	Decal - No Lifting	
5	1701509	1	Decal - Manual	
7	1703811	4	Decal - Lifting Lug	
8	1703814	6	Decal - Tie Down	
9	1704277	3	Decal - Lanyard Attach Graphic	
10	1704412	1	Decal - Hydraulic Oil Chart	
13	3251243	1	Decal - Nameplate	
18	1703942	5	Decal - Warning Crushing	
20	1704000	2	Decal - No Hands	
21	1703924	1	Decal - Warning/Danger	
22	1705347	1	Decal - Warning Inspection	
23	1703948	4	Decal - Warning Crushing	
24	1703936	5	Decal - Danger Electrocution	
25	1703984	1	Decal - Footswitch	
29	1703482	4	Decal - Maximum Tire Load	
30	See Note	NSS	Decal - Bar Code (Note: Not Available for Purchase)	
31	1001267312	2	Decal - 800AJ	
32	1701501	4	Decal - Arrow	
33	1001234433	1	Decal - Warning Maximum Capacity	
34	1001234434	1	Decal - Warning Maximum Capacity	
37	1705977	1	Decal - Upright Level	
38	1703959	2	Decal - Quick Stick	
43	3820001	2	Rivet	
52	4420051	23 ft /7m	Tape, Safety	
56	1705429	1	Decal - Drive/Steer	
60	1001223971	1	Decal - Yearly Inspection	
61	1001263941	1	Decal - Lift Diagram	
62	1001223453	1	Decal - ICES	
63	1001184618	1	Decal - Stop	

FIGURE 9-7. DECAL INSTALLATION (JAPANESE SPECS)

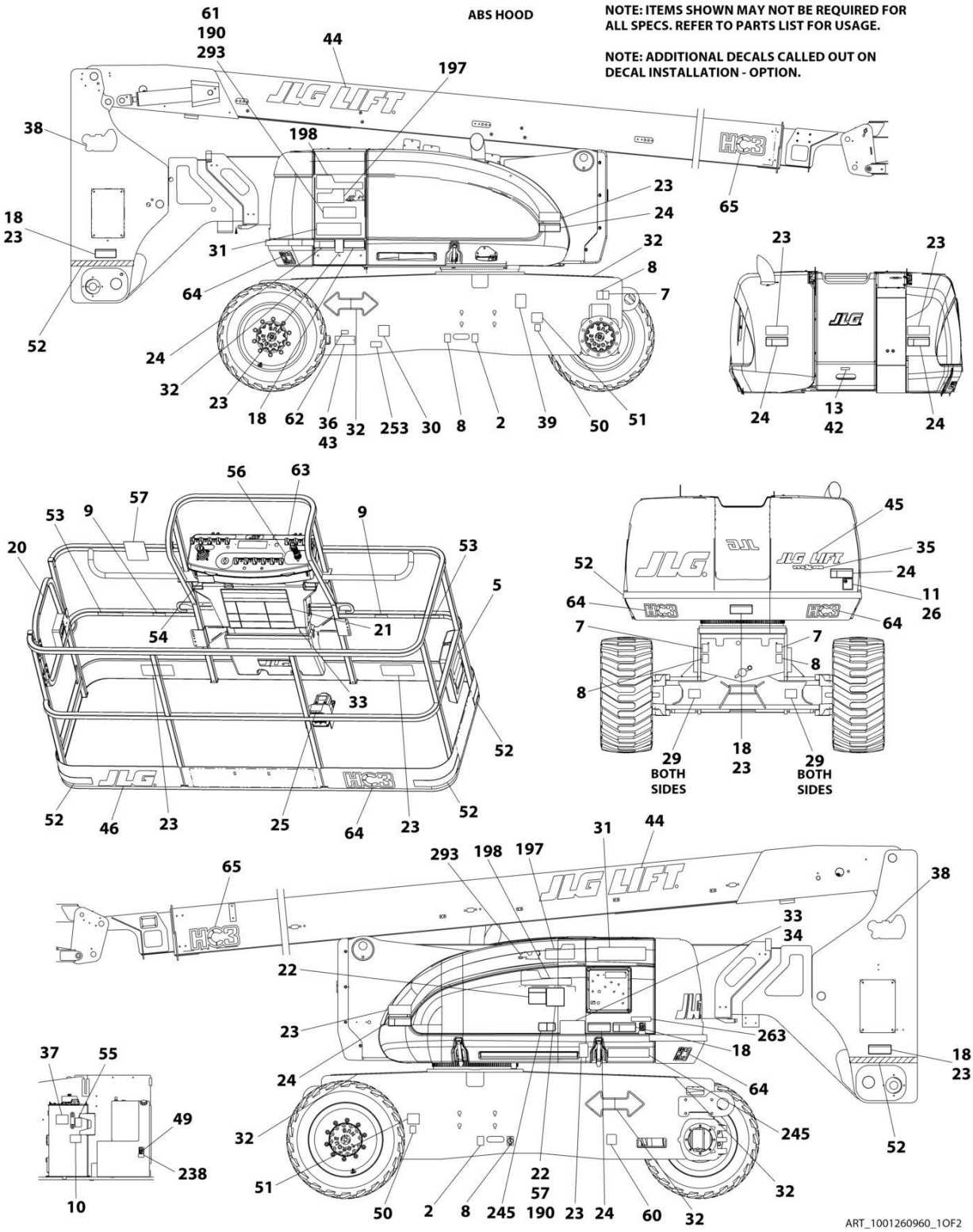

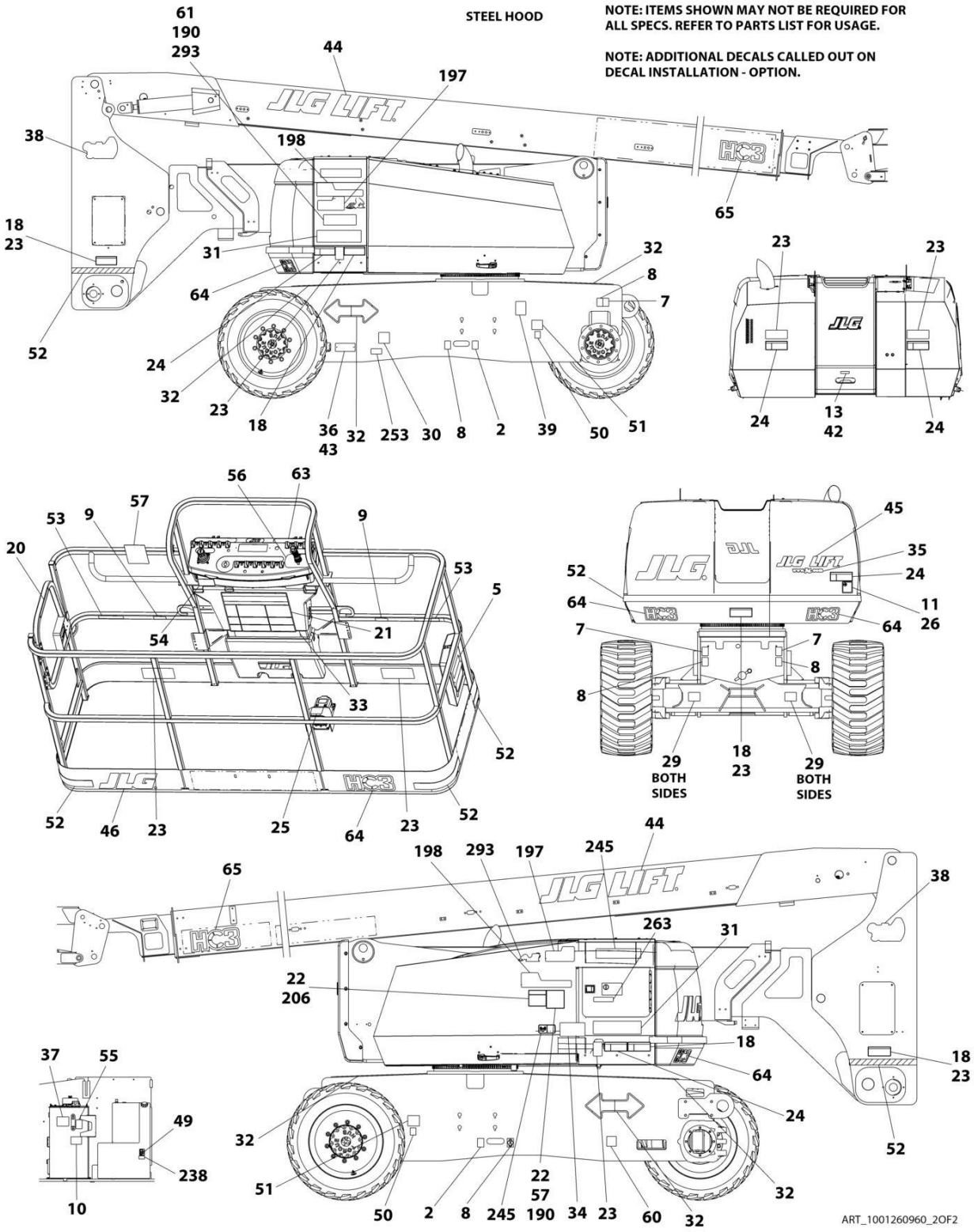
STEEL HOOD
NOTE: ITEMS SHOWN MAY NOT BE REQUIRED FOR ALL SPECS. REFER TO PARTS LIST FOR USAGE.
NOTE: ADDITIONAL DECALS CALLED OUT ON DECAL INSTALLATION - OPTION.
61
190
293
44
197
38
198
18
23
31
64
52
24
32
23
18
36
43
32
253
30
8
2
39
50
51
65
32
8
7
23
23
24
13
42
24
56
63
57
53
9
9
20
53
5
54
21
33
52
52
46
23
25
64
23
52
45
35
24
11
26
52
64
64
7
7
8
8
29
BOTH SIDES
18
23
29
BOTH SIDES
44
198
293
197
245
65
38
263
31
22
206
18
64
24
18
23
52
37
55
49
238
10
32
51
50
2
8
245
22
57
190
34
23
60
32
32
ART_1001260960_2OF2

FIGURE 9-7. DECAL INSTALLATION (JAPANESE SPECS)

ITEM	PART NUMBER	QTY	DESCRIPTION	REV
	1001260960	Ref	DECAL INSTALLATION	D
	1001260969	Ref	REFERENCE CHART	B
2	1701499	2	Decal - No Lifting	
5	1701509	1	Decal - Manual	
7	1703811	4	Decal - Lifting Lug	
8	1703814	6	Decal - Tie Down	
9	1704277	3	Decal - Lanyard Attach Graphic	
10	1704412	1	Decal - Hydraulic Oil Chart	
13	3251243	1	Decal - Nameplate	
18	1703944	5	Decal - Warning Crushing	
21	1703926	1	Decal - Warning/Danger	
22	1705344	1	Decal - Warning Inspection	
23	1703950	4	Decal - Warning Crushing	
24	1703938	5	Decal - Danger Electrocution	
25	1703980	1	Decal - Footswitch	
29	1703482	4	Decal - Maximum Tire Load	
30	See Note	NSS	Decal - Bar Code (Note: Not Available for Purchase)	
31	1001267312	2	Decal - 800AJ	
32	1701501	4	Decal - Arrow	
33	1001234428	1	Decal - Warning Maximum Capacity	
34	1001234429	1	Decal - Warning Maximum Capacity	
37	1705977	1	Decal - Upright Level	
38	1703959	2	Decal - Quick Stick	
43	3820001	2	Rivet	
52	4420051	23 ft /7m	Tape, Safety	
56	1705426	1	Decal - Drive/Steer	
60	1001224053	1	Decal - Yearly Inspection	
61	1001263941	1	Decal - Lift Diagram	
63	1001184618	1	Decal - Stop	

FIGURE 9-8. DECAL INSTALLATION (KOREAN SPECS)

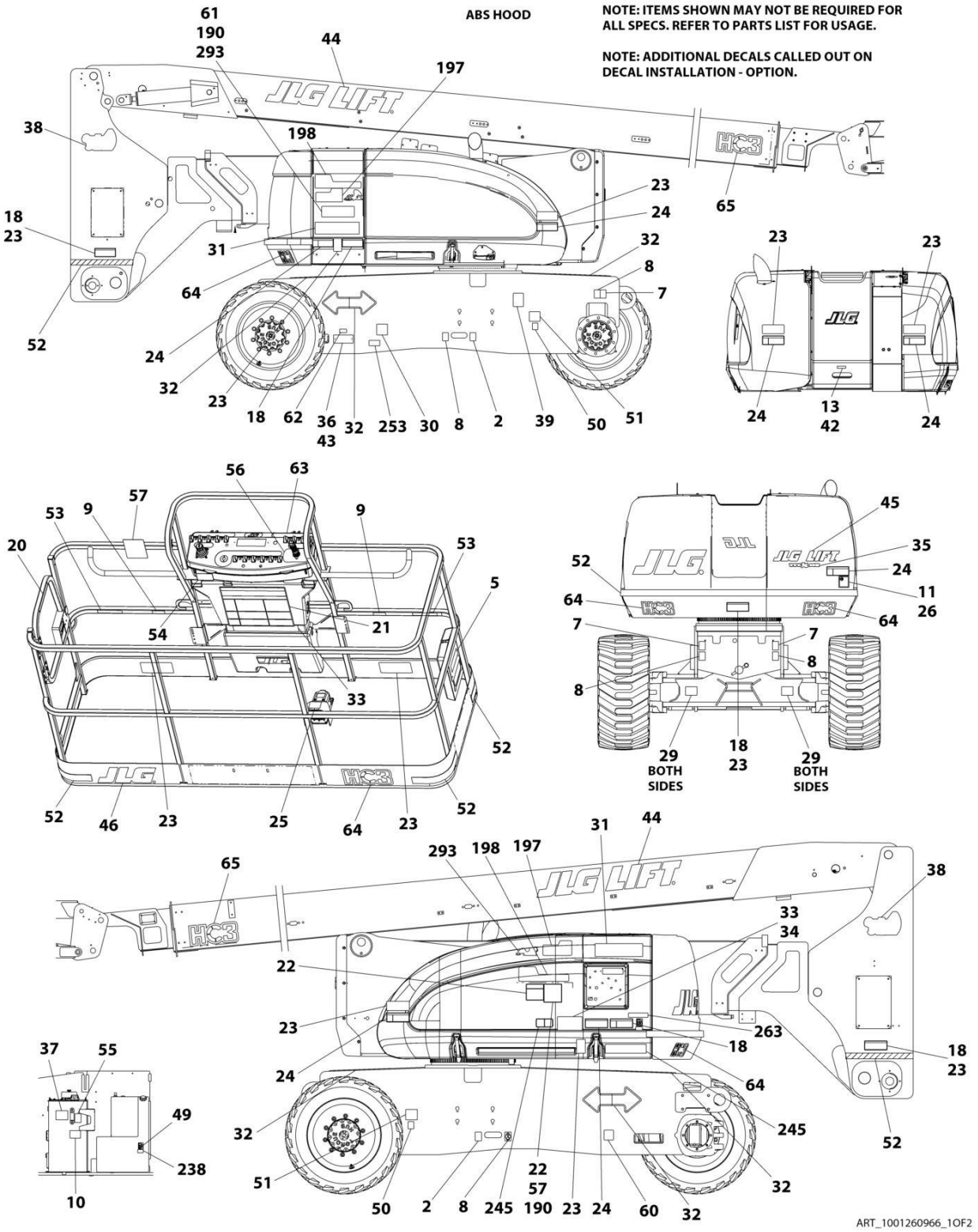

STEEL HOOD

NOTE: ITEMS SHOWN MAY NOT BE REQUIRED FOR ALL SPECS. REFER TO PARTS LIST FOR USAGE.

NOTE: ADDITIONAL DECALS CALLED OUT ON DECAL INSTALLATION - OPTION.

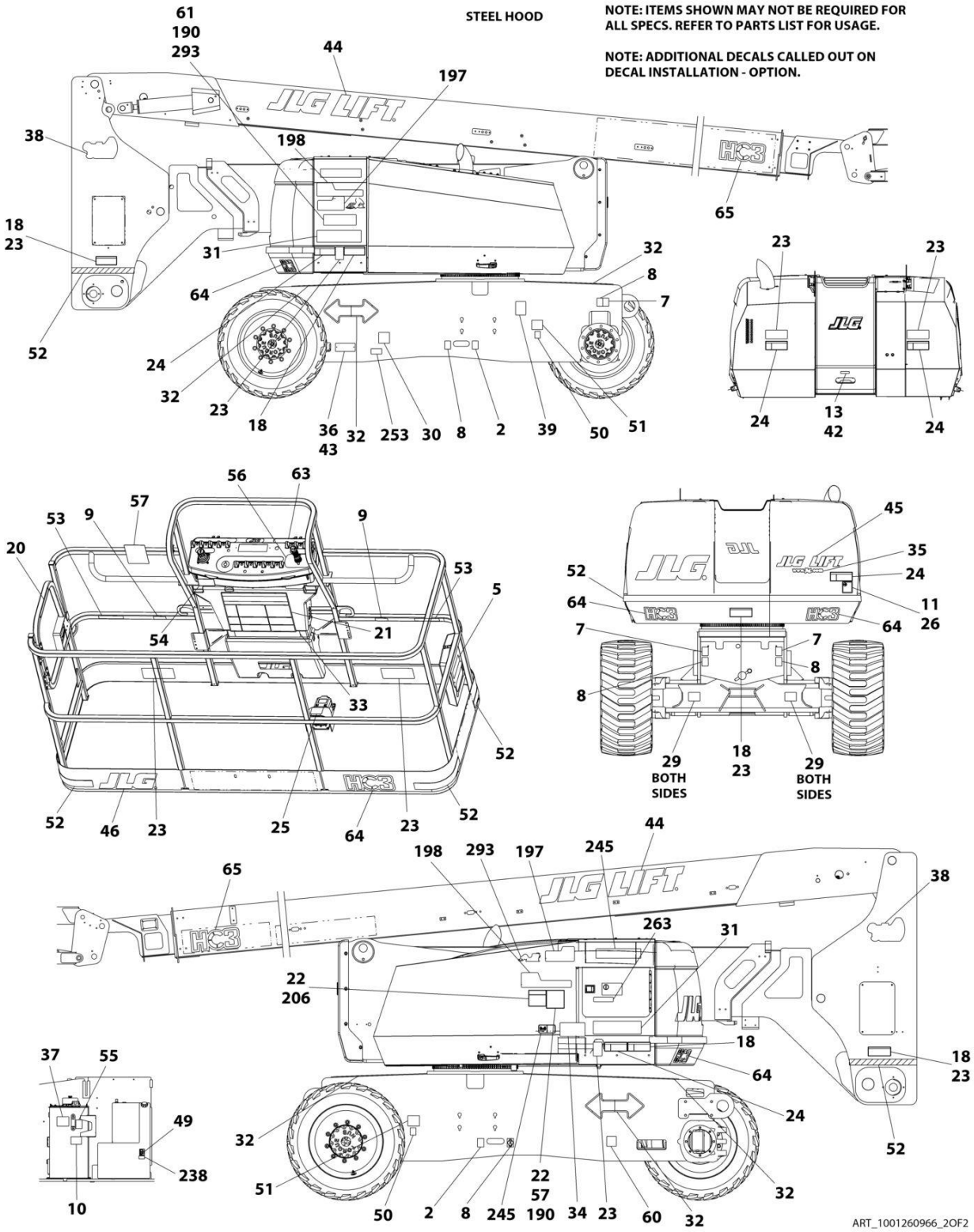

FIGURE 9-8. DECAL INSTALLATION (KOREAN SPECS)

ITEM	PART NUMBER	QTY	DESCRIPTION	REV
	1001260966	Ref	DECAL INSTALLATION	D
	1001260969	Ref	REFERENCE CHART	B
1	1001263941	1	Decal - Lift Diagram	
2	1701499	2	Decal - No Lifting	
5	1701509	1	Decal - Manual	
7	1703811	4	Decal - Lifting Lug	
8	1703814	6	Decal - Tie Down	
9	1704277	3	Decal - Lanyard Attach Graphic	
10	1704412	1	Decal - Hydraulic Oil Chart	
18	1703945	5	Decal - Warning Crushing	
20	1705969	2	Decal - No Hands	
22	1703927	1	Decal - Warning/Danger	
23	1703951	4	Decal - Warning Crushing	
24	1703939	5	Decal - Danger Electrocution	
25	1703981	1	Decal - Footswitch	
29	1703482	4	Decal - Maximum Tire Load	
30	See Note	NSS	Decal - Bar Code (Note: Not Available for Purchase)	
31	1001267312	2	Decal - 800AJ	
32	1701501	4	Decal - Arrow	
33	1001234430	1	Decal - Warning Maximum Capacity	
34	1001235585	1	Decal - Warning Maximum Capacity	
37	1705977	1	Decal - Upright Level	
38	1703959	2	Decal - Quick Stick	
43	3820001	2	Rivet	
52	4420051	23 ft /7m	Tape, Safety	
56	1705427	1	Decal - Drive/Steer Instructions	
60	1001224048	1	Decal - Yearly Inspection	
63	1001184618	1	Decal - Stop	

FIGURE 9-9. DECAL INSTALLATION (LATIN AMERICAN SPECS)

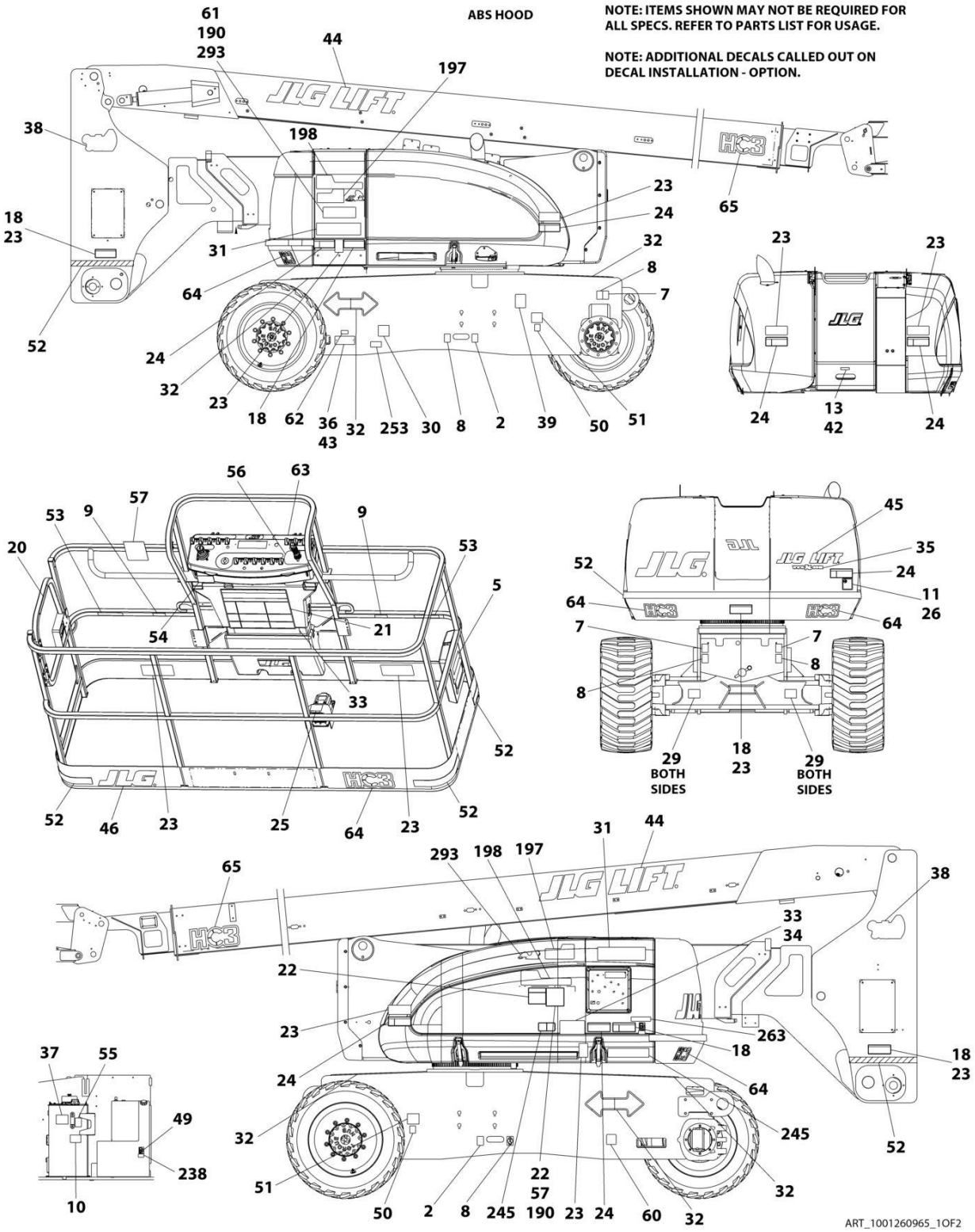

STEEL HOOD

NOTE: ITEMS SHOWN MAY NOT BE REQUIRED FOR ALL SPECS. REFER TO PARTS LIST FOR USAGE.

NOTE: ADDITIONAL DECALS CALLED OUT ON DECAL INSTALLATION - OPTION.

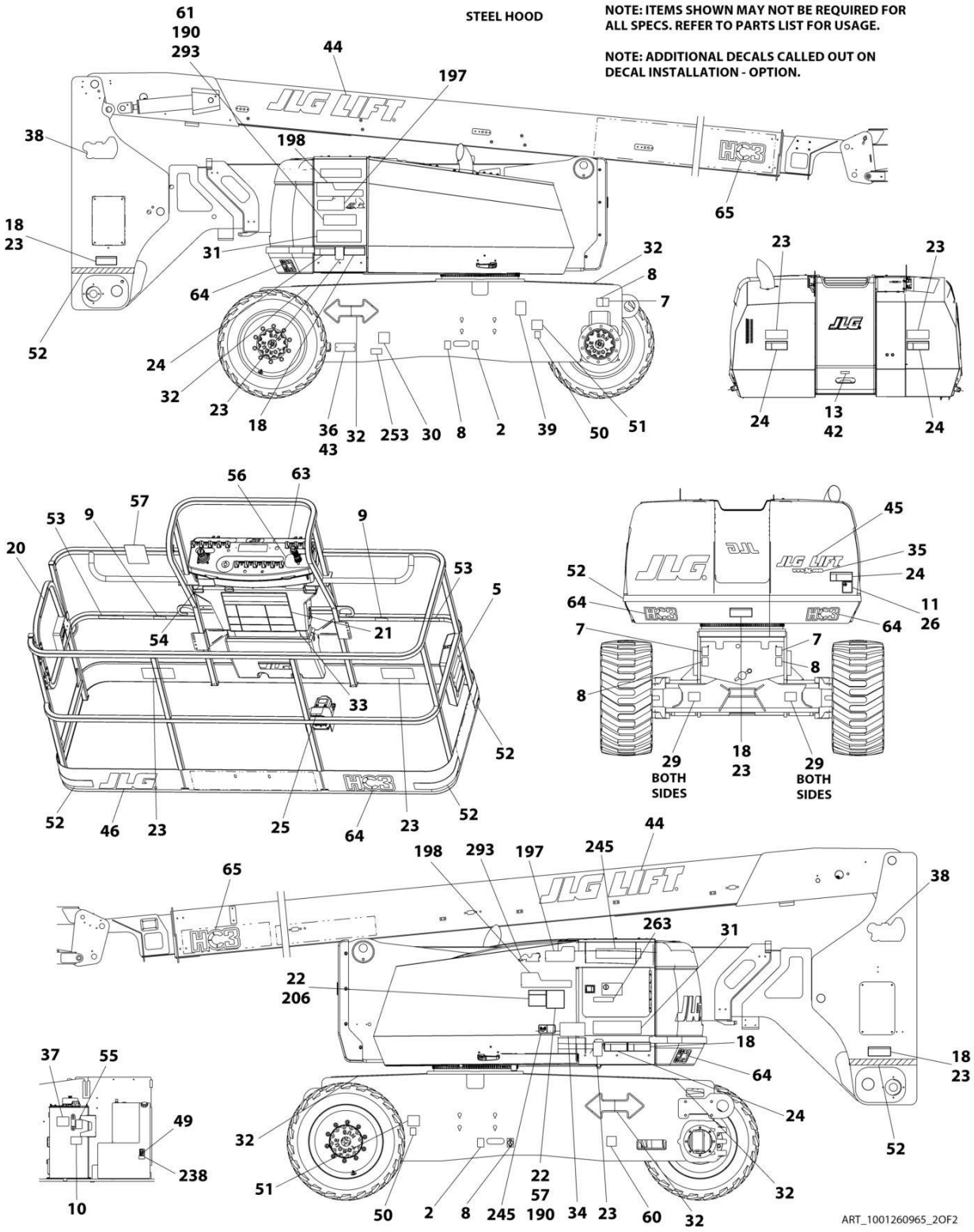

FIGURE 9-9. DECAL INSTALLATION (LATIN AMERICAN SPECS)

ITEM	PART NUMBER	QTY	DESCRIPTION	REV
	1001260965	Ref	DECAL INSTALLATION	D
	1001260969	Ref	REFERENCE CHART	B
2	1701499	2	Decal - No Lifting	
5	1701509	1	Decal - Manual	
7	1703811	4	Decal - Lifting Lug	
8	1703814	6	Decal - Tie Down	
9	1704277	3	Decal - Lanyard Attach Graphic	
10	1704412	1	Decal - Hydraulic Oil Chart	
18	1703943	5	Decal - Warning Crushing	
20	1704001	2	Decal - No Hands	
21	1703923	1	Decal - Warning/Danger	
22	1705917	1	Decal - Warning Inspection	
23	1703947	4	Decal - Warning Crushing	
24	1703935	5	Decal - Danger Electrocution	
25	1703983	1	Decal - Footswitch	
29	1703482	4	Decal - Maximum Tire Load	
30	See Note	NSS	Decal - Bar Code (Note: Not Available for Purchase)	
31	1001267312	2	Decal - 800AJ	
32	1701501	4	Decal - Arrow	
33	1001234431	1	Decal - Warning Maximum Capacity	
34	1001234432	1	Decal - Warning Maximum Capacity	
37	1705977	1	Decal - Upright Level	
38	1703959	2	Decal - Quick Stick	
43	3820001	2	Rivet	
52	4420051	23 ft /7m	Tape, Safety	
60	1001224049	1	Decal - Yearly Inspection	
61	1001263941	1	Decal - Lift Diagram	
63	1001184618	1	Decal - Stop	

FIGURE 9-10. DECAL INSTALLATION - OPTIONS

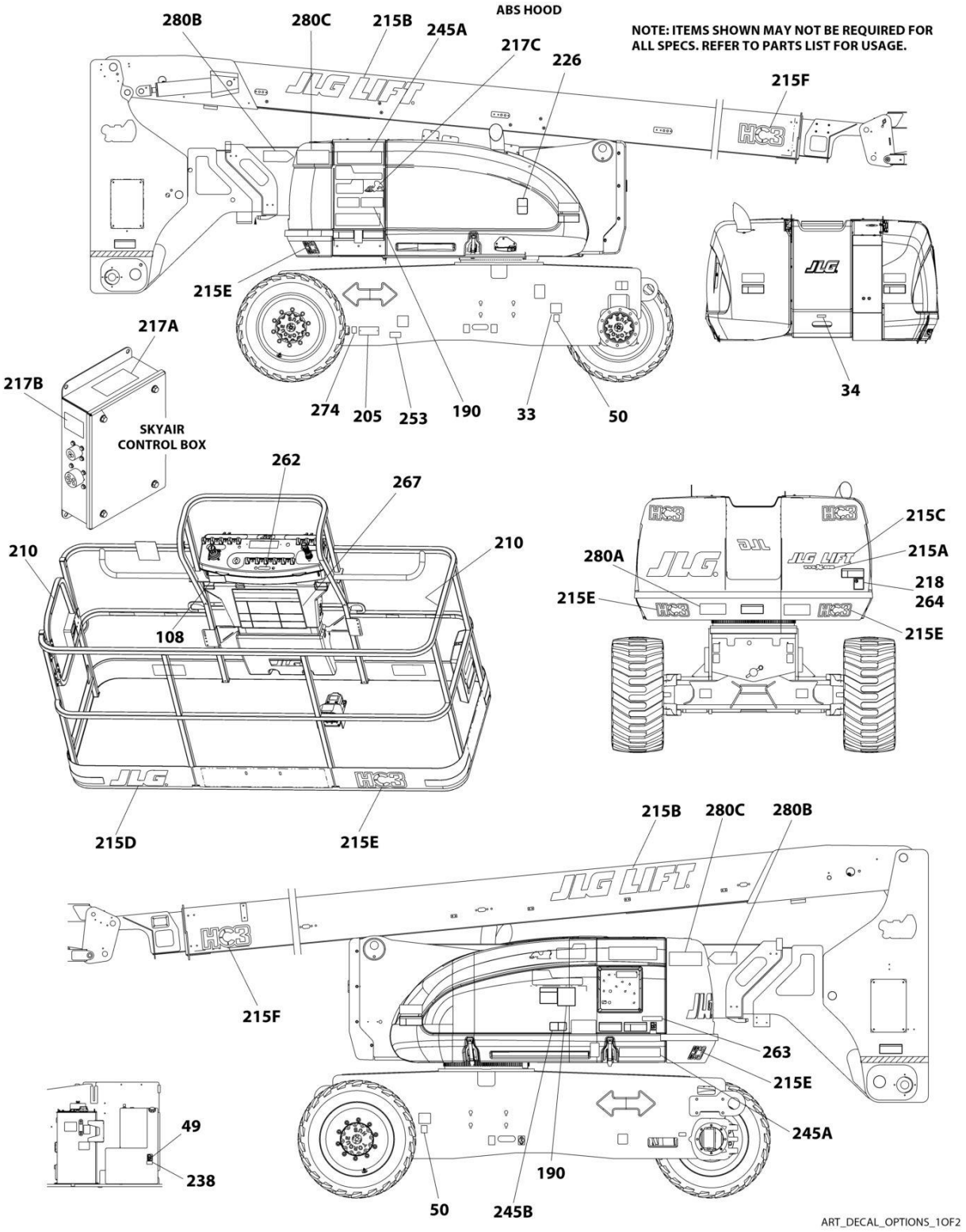

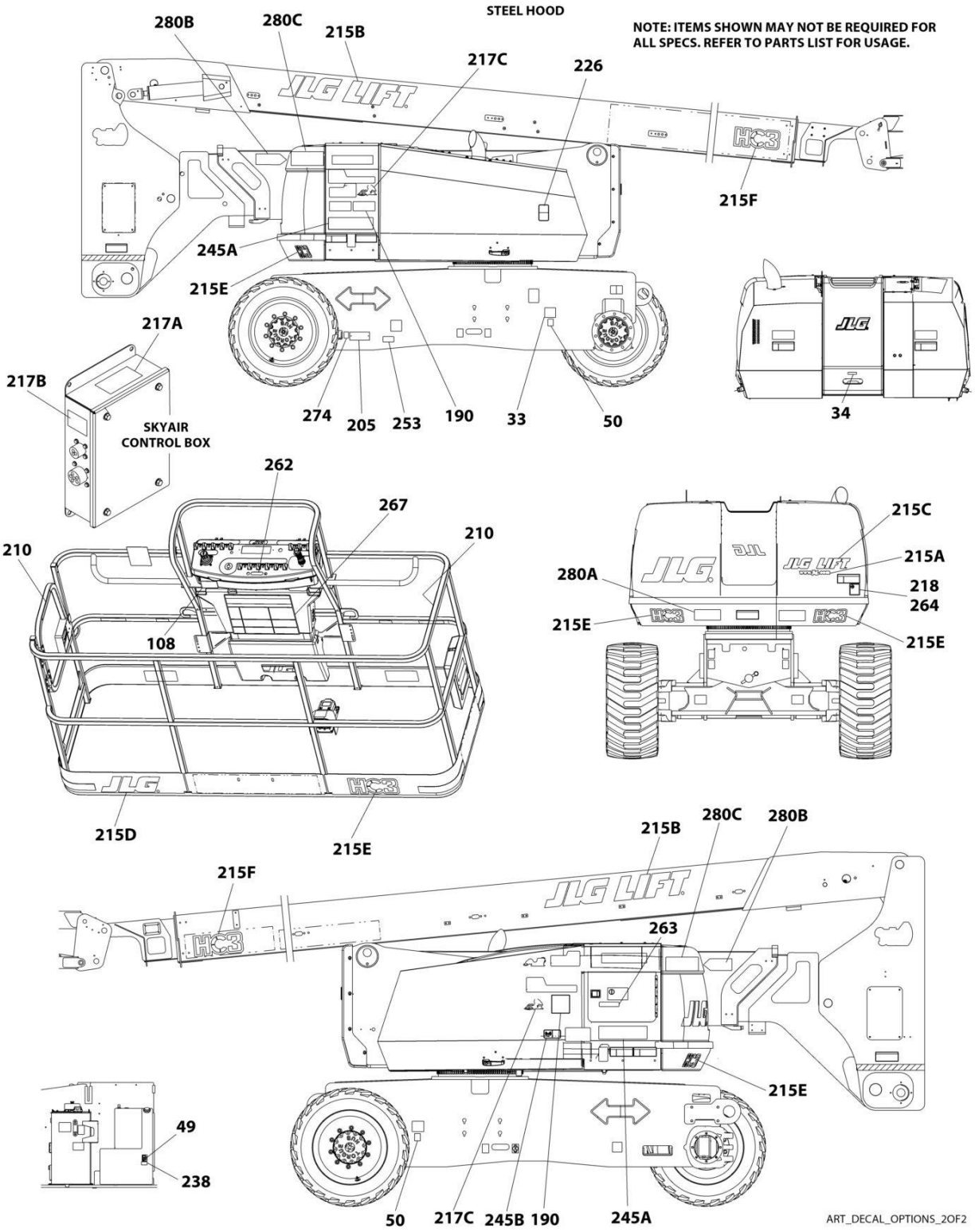
STEEL HOOD
NOTE: ITEMS SHOWN MAY NOT BE REQUIRED FOR ALL SPECS. REFER TO PARTS LIST FOR USAGE.
280B
280C
215B
217C
226
215F
245A
215E
217A
217B
SKYAIR CONTROL BOX
274
205
253
190
33
50
34
262
267
210
210
108
215D
215E
215C
215A
280A
218
264
215E
215E
280C
280B
215B
215F
263
215E
49
238
50
217C
245B
190
245A
ART_DECAL_OPTIONS_2OF2

FIGURE 9-10. DECAL INSTALLATION - OPTIONS

ITEM	PART NUMBER	QTY	DESCRIPTION	REV
		Ref	DECAL INSTALLATION - OPTIONS	
33	1700818	1	Decal - Fuel (LP Gas Machines) (English Language) (ANSI, CSA & Australian Specs)	
33	1704271	1	Decal - Fuel (LP Gas Machines) (English/French Languages) (CSA Specs)	
33	1702720	1	Decal - Fuel (LP Gas Machines) (English/Spansih Languages) (ANSI Export Specs)	
34	3251242	1	Nameplate - 240-50HZ (CE & UK CA Specs)	
49	1701505	1	Decal - Fuel (Diesel)	
49	1701542	1	Decal - Fuel (Gas)	
50	1701543	2	Decal - LP Gas (LP GASS Machines)	
108	1001231801	1	Decal - Warning Proposition 65 (ANSI Specs)	
190		Ref	Decal Installation - SkyGlazier Options:	
190	1001262102	1	Decal Installation - SkyGlazier (ANSI/CSA Specs)	
190	1001262105	1	Decal Installation - SkyGlazier (Australian Specs)	
190	1001262104	1	Decal Installation - SkyGlazier (Brazil Specs)	
190	1001262103	1	Decal Installation - SkyGlazier (Latin American Specs)	
205	See Note	1	Nameplate - Manufacturers Serial Number (Note: Not Available for Purchase)	
210	1702868	2	Decal - No Hands (English Language)	
210	1705968	2	Decal - No Hands (English/Chinese Language)	
210	1704000	2	Decal - No Hands (English/French Language)	
210	1705969	2	Decal - No Hands (English/Korean Language)	
210	1705967	2	Decal - No Hands (English/Portuguese Language)	
210	1704001	2	Decal - No Hands (English/Spanish Language)	
215	1001260957	1	Decal - Logo Installation (All Specs Except CE & UK CA Specs)	A
215	1001263022	1	Decal - Logo Installation (CE & UK CA Specs)	A
215A	1704885	1	Decal - Website	
215B	1702861	2	Decal - JLG Lift	
215C	1702774	2	Decal - JLG Lift	
215D	1702773	1	Decal - JLG	
215E	1001244212	1	Decal - HC3	
215F	1001256906	1	Decal - HC3	
215G	1001159323	1	Decal - JLG (CE & UK CA Specs) (Not Shown)	
217	0273687	Ref	Decal - SkyAir (Machines with SkyAir Option)	
217A	1705836	1	Decal - Hazardous Voltage	
217B	1705837	1	Decal - Air Compressor	
217C	1705886	1	Decal - SkyAir	
218	3251813	1	Decal - USA	
226	1704972	1	Decal - Warning Explosion/ Fire (English Language) (Diesel Machines) (ANSI Specs)	
226	1706098	1	Decal - Warning Explosion/Fire (English Language) (Diesel Machines) (Australian, CE & UK CA Specs)	
226	1706059	1	Decal - Warning Explosion/Fire (English/Portuguese Language) (Diesel Machines) (Brazil Specs)	
226	1706060	1	Decal - Warning Explosion/Fire (English/Chinese Language) (Diesel Machines) (Chinese Specs)	
226	1706064	1	Decal - Warning Explosion/Fire (English Language) (Diesel Machines) (CSA Specs)	
226	1706062	1	Decal - Warning Explosion/Fire (English/Japanes Language) (Diesel Machines) (Japanese Specs)	
226	1706061	1	Decal - Warning Explosion/Fire (English/Korean Language) (Diesel	

ITEM	PART NUMBER	QTY	DESCRIPTION	REV
			Machines) (Korean Specs)	
226	1706063	1	Decal - Warning Explosion/Fire - (English/Spanish Language) (Diesel Machines) (Latin American Specs)	
238	1001125387	1	Decal - Ultra Low Sulfur Fuel (Diesel Machines) (ANSI & CSA Specs)	
238	1001139654	1	Decal - Ultra Low Sulfur Fuel (Diesel Machines) (CE & UK CA Specs)	
245	1001127094	Ref	Decal Installation - ClearSky (Machiens with ClearSky Option)	
245A	1001116208	2	Decal - ClearSky	
245B	1001120989	1	Decal - Radio Frequency	
253	1001143852	1	Decal - Emission Compliance (Diesel Machines) (ANSI Export, Australian, China, CE & UK CA Specs)	
262	1001141300	1	Decal - SkyGuard Override (Machines without Soft Touch Option)	
262	1001141302	1	Decal - SkyGuard Override (Machines with Soft Touch Option)	
263	1001197408	1	Decal - MSSO (CE & UK CA Specs)	
264	1705980	1	Decal - Sound Power (106dB) (Machines with Deutz D2011 Engines) (Australian, CE & UK CA Specs)	
	1001191525	1	Decal - Sound Power (108dB) (Machines with Deutz TD2.9L4 Stage V Engines (CE & UK CA Specs)	
267	1001200124	1	Decal - Quick Start Guide (Danish Language)	
267	1001200121	1	Decal - Quick Start Guide (Dutch Language)	
267	1001180861	1	Decal - Quick Start Guide (English Language)	
267	1001200120	1	Decal - Quick Start Guide (French Language)	
267	1001200122	1	Decal - Quick Start Guide (German Language)	
267	1001200127	1	Decal - Quick Start Guide (Norwegian Language)	
267	1001200125	1	Decal - Quick Start Guide (Swedish Language)	
267	1001200126	1	Decal - Quick Start Guide (Spanish Language)	
274	1001214030	Ref	Decal Installation- EAC (Russian/CIS Specs)	
274	1001173703	1	Decal - EAC	
280	1001220864	Ref	Decal Kit - Boom Transport Position	
280A	1001220512	2	Decal - Lower Boom	
280B	1001220510	2	Decal - Warning Arrow	
280C	1001220511	2	Decal - Warning Stripe	

FIGURE 9-11. SKYCUTTER DECAL INSTALLATION

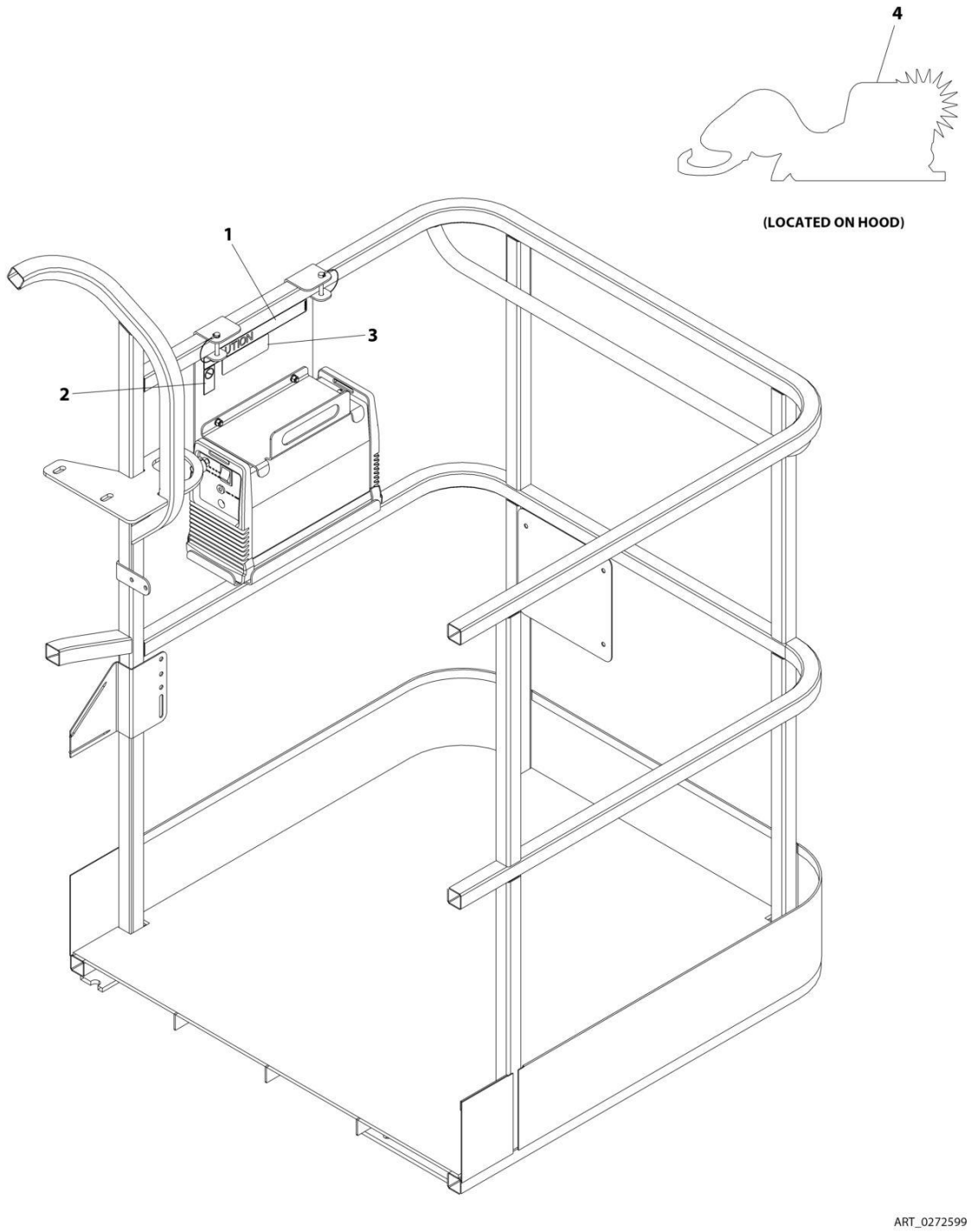

FIGURE 9-11. SKYCUTTER DECAL INSTALLATION

ITEM	PART NUMBER	QTY	DESCRIPTION	REV
	0272599	Ref	SKYCUTTER DECAL INSTALLATION	C
1	1702868	1	Decal - No Hands	
2	1705305	1	Decal - Weld Leads	
3	1001252627	1	Decal - Weight	
4	1705490	2	Decal - SkyCutter	

FIGURE 9-12. SKYWELDER DECAL INSTALLATION - 50HZ

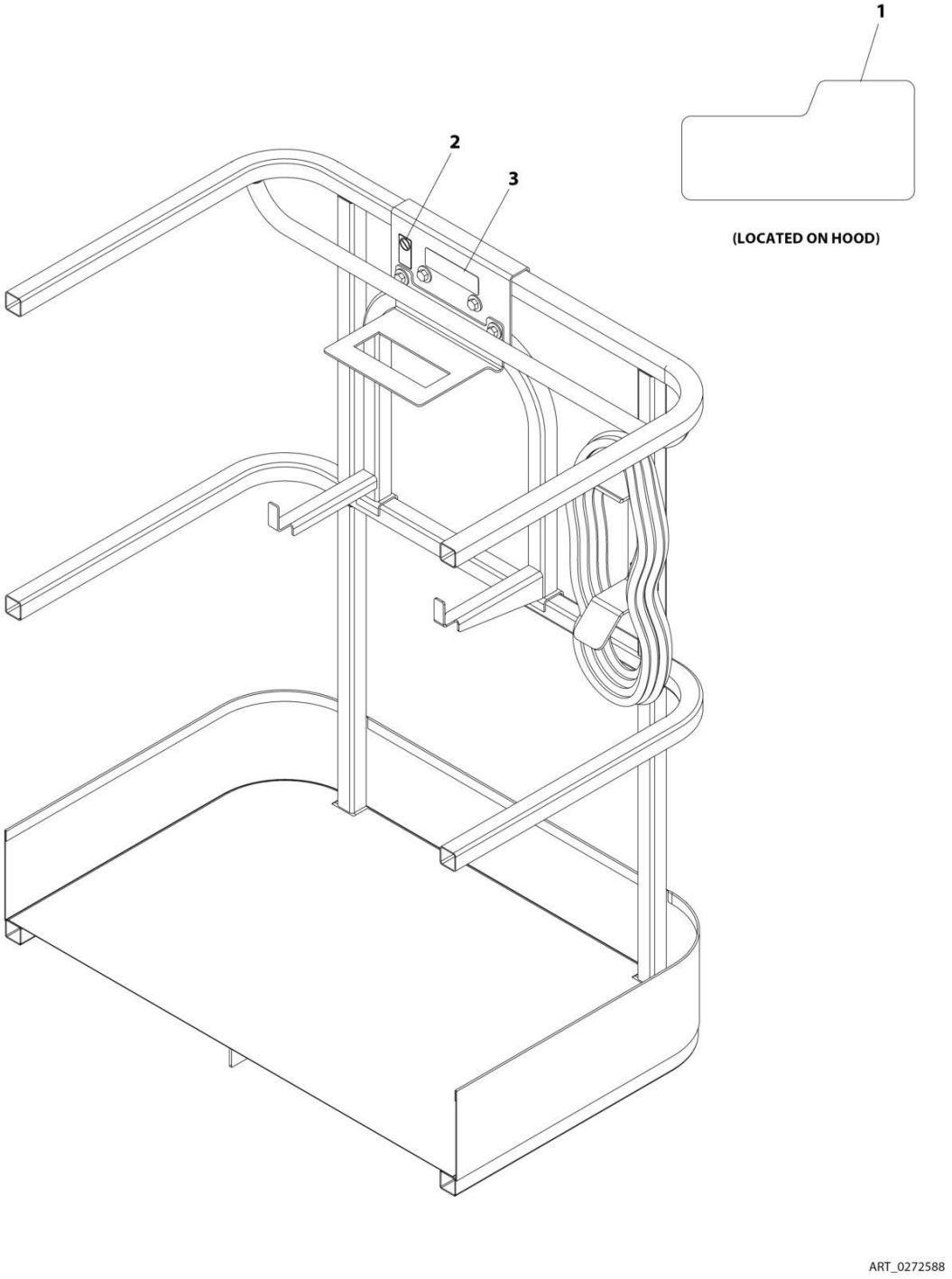

FIGURE 9-12. SKYWELDER DECAL INSTALLATION - 50HZ

ITEM	PART NUMBER	QTY	DESCRIPTION	REV
	0272588	Ref	SKYWELDER DECAL INSTALLATION - 50Hz	B
1	1705355	2	Decal - SkyWelder	
2	1705305	1	Decal - Weld Lead	
3	1001228988	1	Decal - Weight	

FIGURE 9-13. DECAL INSTALLATION - SKYWELDER (60HZ)

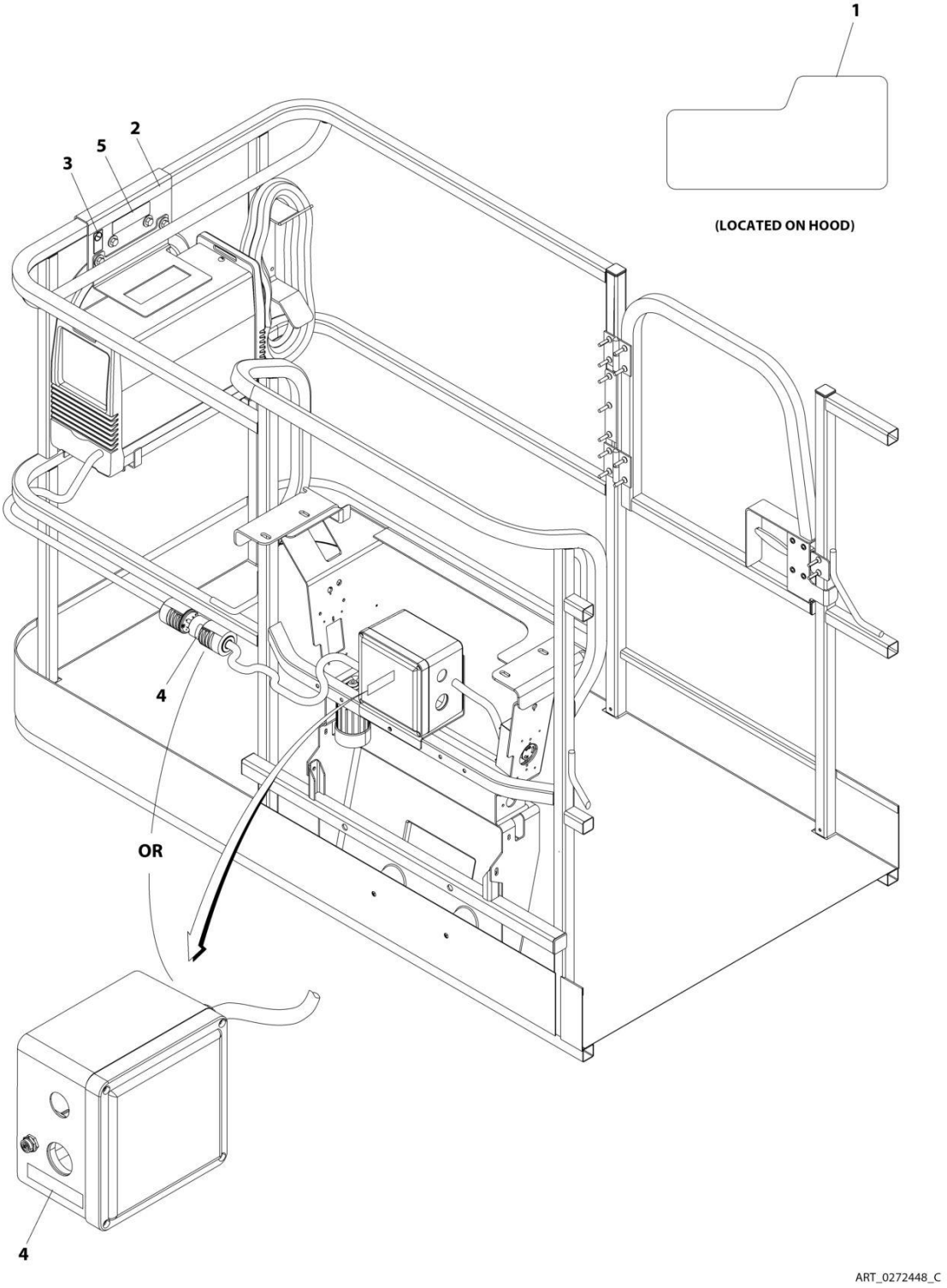

FIGURE 9-13. DECAL INSTALLATION - SKYWELDER (60HZ)

ITEM	PART NUMBER	QTY	DESCRIPTION	REV
	0272448	Ref	SKYWELDER DECAL INSTALLATION - 60Hz	C
1	1705355	2	Decal - SkyWelder	
2	1702868	1	Decal - No Hands	
3	1705305	1	Decal - Weld Lead	
4	1705375	1	Decal - 240V - 3 Phase - 60Hz	
5	1001228988	1	Decal - Weight	

SECTION 10 - RECOMMENDED SERVICE PARTS STOCK

FIGURE 10-1. RECOMMENDED SERVICE PARTS STOCK

ITEM	PART NUMBER	QTY	DESCRIPTION	REV
	Note	Ref	**Note: The following list will service one machine (built to current production per date on the front cover) with emergency repair parts which can be installed in the field. Parts from the list should be replaced when inventory is depleted to keep service parts stock supplied. For further information, contact your JLG dealer or the JLG Industries Parts Department.**	
	4360070	1	Breaker, Circuit 15Amp (4000W/60HZ & 7500W Generators)	
	1001189172	1	Breaker, Circuit 16Amp Double (Breaker Box Kit with Three Breakers)	
	4360542	1	Breaker, Circuit 20Amp (2500W/60HZ Generators)	
	7024485	1	Breaker, Circuit 30Amp (7500W Generators with Deutz D2011 or Ford Engines)	
	70006095	1	Breaker, Circuit 30Amp (7500W Generator with Deutz TD2.9L4 Engine and 7500W/60HZ Generator with Deutz D2011 Engine)	
	1001181045	1	Breaker, Circuit 30mA/16Amp (Breaker Box Kit with One Double Breaker)	
	1001189171	1	Breaker, Circuit 30mA (Breaker Box Kit with Three Breakers)	
	1001159118	1	Breaker GFCI 30Amp 240VAC (240V AC Box at Platform)	
	70001431	1	Breaker, Circuit (Plasma Cutter)	
	70005708	1	Breather Assembly (Hydraulic Tank)	
	70002386	1	Coil (Boom Control Valve Assembly)	
	7012944	1	Coil (Control Valve Installation)	
	7018991	1	Coil (Control Valve Assembly)	
	70004460	1	Coil (Control Valve Assembly)	
	70004463	1	Coil (Control Valve Assembly)	
	70004595	1	Coil (Control Valve Assembly)	
	70004653	1	Coil (Control Valve Assembly)	
	70006956	1	Coil (Control Valve Assembly)	
	4360476	1	Contactor (Ground Control Boxes and Platform Console Boxes)	
	7020176	1	Contactor (Ground Control Boxes and Platform Console Boxes)	
	4360407	1	Controller, Speed (Platform Console Box)	
	1001129555	1	Controller Assembly (Lift and Swing) (Platform Console Box)	
	1001212415	1	Controller Assembly (Drive and Steer) (Platform Console Box)	
	1001117174	1	Controller, Footswitch	
	3990010	1	Diode, 6 Amp (Ground Control Box Harness)	
		Ref	Engine - Deutz D2011	
	70004020	12	Filter, Air	
	7016328	12	Filter, Fuel	
	7016331	12	Filter, Oil	
	7027795	1	Module, Control	
	3740067	1	Relay	
	3740080	1	Relay	
	70004058	1	Relay	
		Ref	Engine - Deutz TD2.9L4	
	91403102	12	Filter, Air	
	70025153	12	Filter, Fuel (Frame Mounted Filter)	
	70025161	12	Filter, Fuel (Engine Mounted Filter)	
	7016331	12	Filter, Oil	
	1001196634	2	Fuse, 2Amp (Breather Heater Harness)	
	8229242	2	Fuse, 5Amp	

ITEM	PART NUMBER	QTY	DESCRIPTION	REV
	80983191	2	Fuse, 10Amp	
	70023592	2	Fuse, 20Amp	
	70023593	2	Fuse, 30Amp	
	70025210	1	Module, ECU	
	3740067	1	Relay	
	70005648	1	Relay	
	1001117308	1	Relay	
		Ref	Engine - Deutz TD2.9L4 (Stage V)	
	91403102	12	Filter, Air	
	70025153	12	Filter, Fuel (Frame Mounted Filter)	
	70025161	12	Filter, Fuel (Engine Mounted Filter)	
	7016331	12	Filter, Oil	
	1001196634	2	Fuse, 2Amp (Breather Heater Harness)	
	8229242	2	Fuse, 5Amp	
	80983191	2	Fuse, 10Amp	
	70023592	2	Fuse, 20Amp	
	70023593	2	Fuse, 30Amp	
	70025210	1	Module, ECU	
	3740067	1	Relay	
	70005648	1	Relay	
	1001117308	1	Relay	
		Ref	Engine - Deutz TD2.9L4 (China III)	
	91403102	12	Filter, Air	
	1001225432	12	Filter, Fuel (Engine Mounted Filter)	
	1001225430	12	Filter, Fuel (Frame Mounted Filter)	
	7016331	12	Filter, Oil	
	70025210	1	Module, ECU	
	3740067	1	Relay	
	70005648	1	Relay	
	1001117308	1	Relay	
		Ref	Engine - Ford	
	70005008	12	Filter, Primary Air	
	70006460	12	Filter, Secondary Air	
	70006155	12	Filter, Fuel	
	70006213	12	Filter, Oil	
	70006175	2	Fuse, 20Amp	
	70006176	1	Module, Engine Control Unit	
	3740067	1	Relay	
	70006171	1	Relay	
	70006172	1	Relay	
	2120210	12	Element, Filter (Control Valves Installation)	
	8229249	2	Fuse, 3Amp (USB Charger & Platform Console Box Harness)	
	2400064	2	Fuse, 5Amp (Generator to Engine Harness)	
	8229242	2	Fuse, 5Amp (Control Box Harness)	
	2860030	1	Key, Replacement (Ground Control Boxes)	
	2940074	1	Latch (Platform Assemblies with Gates)	
	1001142683	1	Module, Control (Strobe Light Installations)	
	1001103667	1	Module, Ground Control	
	1001106938	1	Module, Platform	
	3740080	1	Relay (2500W Generators and 7500W Generator with Ford Engine)	
	70006553	1	Relay (4000W Generators)	

ITEM	PART NUMBER	QTY	DESCRIPTION	REV
	3740049	1	Relay (Ground Control Boxes)	
	3740086	1	Relay (SkyLine Harness)	
	1001186431	1	Relay (SkyGuard)	
	1001204939	1	Sensor, Angle (Boom Valves and Proximity Switches Installation)	
	1001094400	1	Sensor, Dual Axis (Boom Valves and Proximity Switches Installation)	
	1001228225	1	Sensor, Emitter (SkyEye)	
	4360436	1	Sensor, Fuel Level (Tank Installations)	
	4360578	1	Sensor, Limit (Boom Valves and Proximity Switches Installation and Transport Position Switch)	
	1001172271	1	Sensor, Limit (Boom Valves and Proximity Switches Installation with Tower Stow)	
	4360057	1	Sensor, Limit (Soft Touch Installation)	
	7026638	1	Sensor, Pressure (Air Compressor)	
	4360498	1	Sensor, Proximity (Boom Valves and Proximity Switches Installation)	
	4360499	1	Sensor, Proximity (Boom Valves and Proximity Switches Installation)	
	1001170847	1	Sensor, Proximity (Boom Valves and Proximity Switches Installation)	
	1001182570	1	Sensor, Proximity (Boom Valves and Proximity Switches Installation)	
	1001232667	1	Sensor, Proximity (SkyLine)	
	4360517	1	Sensor, Proximity (Rotary Coupling)	
	1001228224	1	Sensor, Receiver (SkyEye)	
	1001225346	1	Switch, Battery (Battery Disconnect Installation)	
	4360475	1	Switch, Emergency Stop (Ground Control and Platform Conosole Boxes)	
	4360469	1	Switch, Key (Ground Control Boxes)	
	70001432	1	Switch, Rocker (Plasma Cutter)	
	4360387	1	Switch, Push Button (CE & UK CA Ground Control Boxes, Platform Console Boxes, and Soft Touch)	
	4360274	1	Switch, Push Button (Ground Control Boxes with Deutz Stage V Engine)	
	4360336	1	Switch, Toggle (Generator Installations)	
	1001155045	1	Switch, Toggle (Ground Control and Platform Console Boxes)	
	4360328	1	Switch, Toggle (Jib Switch Installation)	
	4360331	1	Switch, Toggle (Platform Console Boxes)	
	1001159256	1	Switch, Toggle (Platform Console Boxes)	
	7024469	1	Switch with Lead (Welder Assembly)	

SECTION 11 - SPECIAL OPTIONS/ACCESSORES/KITS

FIGURE 11-1. SPECIAL OPTIONS/ACCESSORES/KITS

ITEM	PART NUMBER	QTY	DESCRIPTION	REV
		Ref	Note: This list is to accommodate machines ordered with special equipment. Options may not be applicable to all models. For more specific parts information contact JLG Parts Department.	
		Ref	MISCELLANEOUS SPECIAL OPTIONS/ACCESSORES/KITS	
	1001229762	Ref	Air Intake Shut-off Valve (Deutz TD2.9L4 Engines) (Factory Installed)	
	1001260970	Ref	Airline to Platform Installation - 1/2in	
	1001249695	Ref	Analyzer and Cable Kit	
	1001249941	Ref	Battery Powered Analyzer Installation Kit	
	1001260886	Ref	Bellows Installation - Boom	
	1001158259	Ref	Bellows Installation - Chassis (Fixed Axle 2WS)	
	2910887	Ref	Boom Wear Pad Kit	
	1001260858	Ref	Boom Wipers Installation	
	1001233047	Ref	Breather Heater Kit (Deutz TD2.9L4 Engines)	
		Ref	ClearSky Telematics Installation (Factory Installed)	
	1001227448	Ref	ClearSky Telematics Installation - Canbus Connection (All Specs Except China Specs)	
	1001246473	Ref	ClearSky Telematics Installation - Canbus Connection (Australian Specs)	
	1001228949	Ref	ClearSky Telematics Installation - Canbus Connection (ANSI Export, CE & UK CA Specs)	
	1001246474	Ref	ClearSky Telematics Installation - Canbus Connection (China Specs)	
	1001229107	Ref	ClearSky Telematics Installation - 3 Wire Connection (ANSI & CSA Specs)	
	1001233237	Ref	ClearSky Telematics 3-Wire Connection (ANSI Export, CE & UK CA Specs)	
		Ref	ClearSky Telematics Kits (Dealer Installed)	
	1001242409	Ref	ClearSky Telematics Access Control Add-on Kit	
	1001243183	Ref	ClearSky Telematics Access Control Add-on Kit - Canbus (ANSI & CSA Specs)	
	1001243184	Ref	ClearSky Telematics Access Control Add-on Kit - Canbus (ANSI Export, CE & UK CA Specs)	
	1001246142	Ref	ClearSky Telematics Add-On Kit (Australian Specs)	
	1001119939	Ref	ClearSky (Telematic) Kit (Dealer Installed) (ANSI Spec)	
	1001119947	Ref	ClearSky (Telematic) Kit (Dealer Installed) (CSA Spec)	
	1001178208	Ref	Cold Weather Package Installation - Deutz D2011 Engines	
	1001178207	Ref	Cold Weather Package Installation - Deutz TD2.9L4 Engines	
	1001255807	Ref	Cold Weather Package Installation - Deutz TD2.9L4 (Stage V) Engines	
	1001219840	Ref	Cold Weather Package Installation - Ford Engines	
	0274883	Ref	Cold Weather Transformer Installation (ANSI Export, Australian, China and Japanese Specs Only)	
	1001115918	Ref	Cribbing Installation	
	1001264254	Ref	Cylinder Kit - Level/Upright (Includes 2 Cylinders - Tower Lift & Upright Level)	
	1001264148	Ref	Cylinder Kit - Lift (Includes 1 Cylinder and Service info)	
		Ref	Decals Kits:	
	1001270517	Ref	Machine - ANSI 9220	
	1001108721	Ref	Platform	
	1001272200	Ref	Platform - ANSI 9220	

ITEM	PART NUMBER	QTY	DESCRIPTION	REV
	1001119563	Ref	Platform Console	
	1001272088	Ref	Platform Console - ANSI 9220	
	2902396	Ref	Drive/Steer Cutout Kit	
	1001148902	Ref	Electrical Connector Kits - Amp	
	1001148903	Ref	Electrical Connector Kits - Deutsch DT	
	1001148904	Ref	Electrical Connector Kits - Deutsch HD	
	1001148905	Ref	Electrical Connector Kits - Packard	
	1001148906	Ref	Electrical Connector Kits - Various	
	1001218022	Ref	Engine Block Heater Installation - Ford Engines	
	1001108962	Ref	Exhaust Rain Cap Installation (Australian, CE & UK CA Specs)	
	1001269630	Ref	Fall Arrest (Bolt-On) Add-On Kit (30inch x 4 Ft/1.22m Platform)	
	1001269629	Ref	Fall Arrest (Bolt-On) Add-On Kit (30inch x 5 Ft/1.52m Platform)	
	1001269631	Ref	Fall Arrest (Bolt-On) Add-On Kit (30inch x 6 Ft/1.82m Platform)	
	1001237883	Ref	Fall Arrest (Bolt-On) Add-On Kit (6 Ft/1.82m Platform) (ANSI, ANSI Export, China, CSA & Japanese Specs)	
	1001237882	Ref	Fall Arrest (Bolt-On) Add-On Kit (8 Ft/2.4m Platform) (ANSI, ANSI Export, China, CSA & Japanese Specs)	
		Ref	Fan Cover/Grille Options	
	1001182599	Ref	Fan Cover Installation (Deutz D2011 Engines)	
	1001177694	Ref	Fan Grille Installation (Deutz TD2.9L4 Engines and Deutz TD2.9L4 (Stage V) Engines (Modine Radiator)	
		Ref	Filter Kits:	
		Ref	Combined Filter Kit Options (Hydraulic/Air and Fuel/Engine Oil)	
	1001241774	Ref	Deutz D2011 Engine Machines	
	1001195533	Ref	Deutz TD2.9L4 Engine Machines	
	1001241776	Ref	Ford Engine Machines	
	1001139099	Ref	Fire Extinguisher Installation (20lb)	
	1001117294	Ref	Footswitch Shield (Note: Move Decal to Shield)	
	1001202749	Ref	Fuel Cap Cover Installation (Black) (Note: Lock p/n 1001102157 must be Purchased Separately)	
	1001191395	Ref	Fuel Cap Cover Installation (Green) (Diesel Machines) (Note: Lock p/n 1001102157 must be Purchased Separately)	
	1001094475	Ref	Generator Hourmeter Installation	
	1001241413	Ref	Hostile Environment - 2WD Add-on Kit	
	1001241415	Ref	Hostile Environment - 4WD Add-on Kit	
	1001209632	Ref	Hose Kit - Platform Valve	
	1001268736	Ref	Jib Link Kit	
	1001148971	Ref	Lanyard (Bolt-On) Kit Installation	
		Ref	Light Options:	
	0271768	Ref	Headlights & Taillights Installation (ABS Hoods)	
	1001164786	Ref	Headlights & Taillights Installation (Steel Hoods)	
	0273485	Ref	Platform Worklights Installation	
	1001257561	Ref	Portable Worklights Installation	
	1001152965	Ref	Strobe Light Installation - Platform Mounted (Amber)	
	1001154231	Ref	Strobe Light Installation - Platform & Ground Mounted (Amber)	
	1001236951	Ref	Low Temperature Cutout Installation (Russian Specs)	
		Ref	Oil Cooler Options:	
	1001156172	Ref	Oil Cooler Installation - Deutz D2011 Engine Machines	
	1001184569	Ref	Oil Cooler Installation - Deutz TD2.9L4 Engine and Deutz TD2.9L4 (Stage V) Engine Machines	
	1001219633	Ref	Oil Cooler Installation - Ford Engine Machines	
	1001200700	Ref	Oil Cooler Replacement Kit (RCP to YMER)	
	1001195304	Ref	Platform Console Cover Installation (Factory Installed)	

ITEM	PART NUMBER	QTY	DESCRIPTION	REV
	1001110974	Ref	Platform Console Enclosure Cover Installation - Steel (Factory Installed)	
	1001270482	Ref	Platform Console Enclosure Cover Installation - Steel (Dealer Installed)	
	2915228	Ref	Platform Conversion Kit (Front to Side Entry)	
	1001142504	Ref	Platform Entry Kit - Drop Bar (Replaces Swing Gate with Drop Bar)	
	1001142505	Ref	Platform Entry Kit - Swing Gate (Replaces Drop Bar with Swing Gate)	
		Ref	Platform Mesh to Mid Rail Installation Options:	
	1001266098	Ref	Platform Mesh to Mid Rail Installation - 3ft x 8ft Platforms (Vinyl) (ANSI, ANSI Export, Australian, China, and CSA Specs)	
	1001269389	Ref	Platform Mesh to Mid Rail Installation - 3ft x 8ft Platforms (Steel) (ANSI, ANSI Export, Australian, China, and CSA Specs)	
		Ref	Platform Mesh to Top Rail Installation Options:	
	1001272182	Ref	Platform Mesh to Top Rail Installation - 2.5ft x 4ft Platforms (Steel) (ANSI, ANSI Export, China, and CSA Specs)	
	1001266807	Ref	Platform Mesh to Top Rail Installation - 2.5ft x 4ft Platforms (Vinyl) (ANSI, ANSI Export, China, and CSA Specs)	
	1001271642	Ref	Platform Mesh to Top Rail Installation - 3ft x 6ft Platforms (Steel) (ANSI, ANSI Export, China, and CSA Specs)	
	1001266489	Ref	Platform Mesh to Top Rail Installation - 3ft x 6ft Platforms (Vinyl) (ANSI, ANSI Export, China, and CSA Specs)	
	1001269187	Ref	Platform Mesh to Top Rail Installation - 3ft x 8ft Platforms (Steel) (ANSI, ANSI Export, China, and CSA Specs)	
	1001266056	Ref	Platform Mesh to Top Rail Installation - 3ft x 8ft Platforms (Vinyl) (ANSI, ANSI Export, China, and CSA Specs)	
		Ref	Platform Mesh to Top Rail Add-on Kits:	
	1001214552	Ref	30in x 4ft (76cm x 1.22m) with Gate	
	1001214561	Ref	36in x 6ft (91.5cm x 1.83m) with Gate	
	1001214562	Ref	36in x 8ft (91.5cm x 2.44m) with Gate	
	0272733	Ref	Platform, Top Rail Extension Installation - 3ft x 6ft Platforms	
	0272725	Ref	Platform, Top Rail Extension Installation - 3ft x 8ft Platforms	
	1580013	Ref	Platform Storage Tray	
	1001209059	Ref	Platform Work Surface Installation	
	1001162546	Ref	Pump Coupling Replacement Kit	
	1001199488	Ref	Radiator Replacement Kit (RCP to Modine Radiator)	
	1001190888	Ref	Service Kits	Q
	1001241547	Ref	SkyEye Housing Kit (Left Side)	
	1001241548	Ref	SkyEye Housing Kit (Right Side)	
	1001247073	Ref	SkyEye Retrofit Kit	
	1001206477	Ref	SkyGuard Complete Add-On Kit (Blue Beacon) (UGM Machines) (Note: Requires 7500W SkyPower Generator)	
	1001210026	Ref	SkyGuard Complete Add-On Kit (Red Beacon) (UGM Machines) (Note: Requires 7500W SkyPower Generator)	
	1001137672	Ref	SkyGuard Platform Sensor Kit (UGM Machines)	
	1001137440	1	SkyGuard Sensor Harness	
	1001186431	2	Relay	
	1001206311	Ref	SkyGuard Strobe Light Kit - Hood Mounted (Blue Beacon)	
	1001210025	Ref	SkyGuard Strobe Light Kit - Hood Mounted (Red Beacon)	
	1001250595	Ref	SkyGuard 6-Pin Retrofit Installation Kit	
	1001249052	Ref	SkyGuard Retrofit Kit (Dealer Installed)	
	1001262016	Ref	SkyLine Add-on (Dealer Installed)	
	1001252033	Ref	SkySense/Enhanced Detection System (EDS) Level 1 (2-Bar) Add-on Kit (Dealer Installed)	

ITEM	PART NUMBER	QTY	DESCRIPTION	REV
	1001252034	Ref	SkySense/Enhanced Detection System (EDS) Level 2 (3-Bar) Add-on Kit (Dealer Installed)	
	1001253618	Ref	SkySense/Enhanced Detection System (EDS) Level 1 (2-Bar) Module Kit (Dealer Installed)	
	1001253619	Ref	SkySense/Enhanced Detection System (EDS) Level 2 (3-Bar) Module Kit (Dealer Installed)	
	1001250465	Ref	SkySense/Enhanced Detection System (EDS) Level 1 (2-Bar) Installation Kit (Factory Installed)	
	1001250466	Ref	SkySense/Enhanced Detection System (EDS) Level 2 (3-Bar) Installation Kit (Factory Installed)	
	1001157013	Ref	Softtouch Counterweight Installation (Required with Soft Touch Option)	
		Ref	Tools for Service	
	1600244	1	Analyzer, Machine System	
	7002840	1	Antirotation Pin Removal Tool	
	8896941	1	Wire Stripper	
	7002821	1	Wire Crimper (To install wire ends to wires)	
	7002823	1	Pin/Socket Extractor - Universal (To Remove Pins/Sockets from Connectors)	
	4460467	1	Extractor - 16-18 Gauge (For Removal of Pin/Sockets from Deutsch Connectors)	
	4460510	1	Extractor - 12-14 Gauge (For Removal of Pin/Sockets from Deutsch Connectors)	
	7002822	1	Screwdriver, Potentiometer (To Adjust Drive Controllers)	
	7016654	1	Screwdriver, Magnetic	
	7004275	1	Seal Installation Tool - 1in	
	7004276	1	Seal Installation Tool - 1-1/2in	
	7002826	1	Seal Installation Tool - 2in	
	7016655	1	Wire Rope Sheave Gauge	
	7016652	1	Huck Bolt Fastener (For Small Huck Bolts Only)	
	70000017	1	ADE Software CD	
	1001137005	1	Software Cable Kit	
	70005663	1	Tool, Port Plate for Pump p/n 1001142522	
	1001258953	Ref	Tower Stow Indicator Add-on Kit (Dealer Installed)	
	2915094	Ref	Turntable Bearing Kit	
	1001262959	Ref	Voltage Regulator Relocation Kit	

PART NUMBER INDEX

SECTION 11 - SPECIAL OPTIONS/ACCESSORES/KITS

0100009 95, 99, 103, 107, 111, 115, 119, 123, 127, 131, 135, 139, 143, 147, 151, 155, 479, 483
0100011 ....15, 17, 19, 21, 23, 37, 39, 41, 47, 59, 63, 65, 67, 69, 71, 73, 75, 77, 79, 81, 89, 91, 95, 99, 103, 107, 111, 115, 119, 123, 127, 131, 135, 139, 143, 147, 151, 155, 161, 173, 177, 181, 182, 186, 187, 190, 191, 194, 195, 203, 205, 211, 213, 217, 219, 222,226, 233, 237, 241, 245, 249, 251, 253, 255, 258, 264, 270, 276, 293, 297, 302, 306, 309, 311, 314, 320, 325, 327, 329, 355, 357, 367, 369, 373, 377, 379, 383, 387, 391, 395, 399, 403, 407, 411, 417, 419, 421, 423, 427, 429, 431, 433, 437, 441, 445, 449, 455, 457, 459, 461, 467, 469, 471, 501, 503, 512, 517, 519, 523, 537, 539, 541, 543, 667, 673, 675, 677, 679
0100019 53, 59, 203, 205, 369, 379, 383, 387, 391, 395, 399, 404, 407, 411
0100020 ....35, 69, 73, 75, 77, 79, 81, 203, 205, 208, 211, 213, 233, 237, 241, 245, 258, 259, 264, 265, 270, 272, 276, 302, 306, 314, 320, 388, 404, 489, 509, 512, 641, 643, 645, 647, 649, 651, 653, 655, 657, 659, 661
0100035 .....295, 479, 483
0100038 421
0100048 95, 99, 103, 107, 111, 115, 119, 123, 127, 131, 135, 139, 143, 147, 151, 155, 161, 163, 165, 302, 306, 373, 383, 391, 399, 407, 437, 441, 479, 483
0100062 ..77, 79, 81, 222, 226, 258, 264, 270, 276, 316, 322, 396, 404
0100079 .....351, 391, 407
0100081 ....186, 190, 194, 429, 527, 529
0140011 ..... 479, 483
0140044 161
0181949 35
0200048 ... 537, 539, 541, 543
0200742 ..... 367, 377
0232121 ..... 39, 41, 43
0256202 637
0257728 531
0258671 507
0258728 363
0259420 431
0270888 29
0271090 29
0271091 29
0271340 497
0271768 823
0272254 519
0272259 631
0272260 633
0272418 529
0272427 541
0272433 639
0272435 .... 404, 408, 412
0272448 815
0272521 517
0272588 813
0272589 ..... 396, 400
0272599 811
0272725 824
0272733 824
0273353 512
0273485 823
0273687 808
0273706 543
0273824 537
0274031 203
0274661 535
0274883 822
0275216 ..... 641, 743
0275217 ..... 645, 745
0275452 ..... 649, 747
0275453 ..... 653, 749
0275454 ..... 657, 751
0360406 43
0362770 .... 173, 177, 181
0400075 ..... 89, 91
0440237 423
0440244 59
0480100 .... 531, 533, 535
0480121 ..... 367, 377
0480126 ..... 379, 395
0480129 ..... 387, 404
0561185 421
0561295 419
0630407 ... 258, 264, 270, 276
0630427 ..... 437, 441
0630462 ... 537, 539, 541, 543
0630467 433
0630485 .... 186, 190, 194
0630518 ... 159, 487, 509, 512, 517, 519, 523
0630534 565
0630535 577
0630548 95, 99, 103, 107, 111, 115, 119, 123, 127, 131, 135, 139, 143, 147, 151, 155
0630568 ..... 480, 484
0630593 429
0641404 95, 99, 103, 107, 111, 115, 119, 123, 127, 131, 135, 139, 143, 147, 151, 155, 377, 379, 383, 387, 391, 395, 399, 403, 407, 417, 479, 483, 503
0641405 ... 161, 203, 205, 411, 503
0641406 ... 163, 165, 173, 177, 181, 197, 199, 207, 233, 237, 241, 245, 249, 251, 253, 255, 258, 264, 270, 276, 302, 306, 359, 361, 379, 383, 475, 477, 505, 507, 667, 687, 689
0641407 95, 99, 103, 107, 111, 115, 119, 123, 127, 131, 135, 139, 143, 147, 151, 155, 163, 217, 219, 222, 226, 309, 311, 359
0641408 ... 186, 190, 194, 303, 307, 437, 441, 475, 477
0641409 .... 203, 211, 214
0641410 ..... 37, 203, 205, 211, 213, 222, 226
0641412 ... 233, 237, 241, 245
0641414 ..... 47, 479, 483, 501, 537, 539, 541, 543
0641416 ... 641, 643, 645, 647, 649, 651, 653, 655, 657, 659, 661
0641418 ..... 47, 433, 445, 449, 455, 457, 459, 461, 467, 469, 471
0641420 ..... 302, 306
0641506 95, 99, 103, 107, 111, 115, 119, 123, 127, 131, 135, 139, 143, 147, 151, 155, 174, 178, 181, 207
0641507 433
0641508 ... 39, 41, 77, 79, 81, 173, 177, 181, 186, 190, 194, 211, 213, 233, 238, 241, 245, 302, 306, 367, 369, 373, 377, 437, 441
0641510 ..... 222, 226
0641511 441
0641512 ..... 222, 226
0641514 .... 531, 533, 535
0641516 ... 387, 391, 395, 399, 403, 407, 411
0641518 .... 258, 264, 270, 276
0641560 23
0641604 .....417, 437, 441
0641605 .... 258, 264, 270, 276, 431
0641606 37, 47, 174, 178, 182, 205, 222, 226, 417, 419, 429, 431, 512, 517, 519, 523
0641607 .... 19, 21, 65, 67, 69, 71, 73, 75, 77, 79, 81, 186, 190, 194, 302, 306, 369, 419, 421, 429
0641608 .... 173, 174, 177, 178, 181, 182, 187, 191, 194, 197, 199, 201, 258, 264, 270, 276, 353, 417, 419, 421, 437, 441
0641609 .... 173, 177, 181, 186, 190, 194, 205, 222, 226, 258, 264, 270, 276, 355, 357, 363, 419, 421
0641610 .... 169, 171, 207, 211, 213, 222, 226, 233, 237, 241, 245, 293, 295, 297, 302, 306, 351, 367, 377, 421, 475, 477
0641611 .....63, 233, 237, 241, 245, 417
0641612 .... 258, 264, 270, 276, 302, 306, 419, 673, 675, 677, 679
0641614 .... 47, 65, 67, 69, 71, 73, 75, 77, 79, 81
0641615 421
0641616 .... 207, 379, 383, 388, 391, 400, 408, 421
0641617 35
0641618 .....396, 404
0641622 431
0641624 .....429, 431
0641648 429
0641708 .... 258, 264, 270, 276
0641772 .... 367, 369, 373, 377
0641806 .....272, 421
0641808 .... 211, 213, 233, 237, 241, 245, 249, 251, 253, 255, 302, 306, 309, 311, 379, 383, 387, 391, 395, 399, 403, 407
0641810 19, 21, 203, 205, 417
0641812 .....63, 217, 219, 249, 251, 253, 255, 309, 311, 369
0641818 ..77, 79, 81, 357, 363, 365
0641820 .....63, 222, 226, 355

0641840 417
0642010 ... 211, 213, 302, 306
0642012 ... 233, 237, 241, 245, 527, 529
0642038 43
0642212 15, 17, 527, 529
0642214 417
0642620 417
0651406 47
0681608 15, 17, 211, 213, 233, 237, 241, 245, 260, 266, 278, 427
0681620 ... 545, 547, 549, 551, 553
0681814 ..... 463, 473
0681820 ... 258, 264, 270, 276
0681822 ..... 23, 260, 266, 270, 276, 463, 473
0682016 23
0682023 59
0682032 59
0682216 53
0682236 ..... 15, 17
0682424 ... 545, 547, 549, 551, 553
0700408 ... 641, 643, 645, 647, 649, 651, 653, 655, 657, 659, 661
0700615 ..... 169, 171
0700618 .... 187, 191, 195
0700624 423
0700808 ..... 222, 226
0700810 ..... 314, 320
0700812 ..... 314, 320
0700814 ... 260, 266, 270, 314, 320
0700816 327
0700818 327
0701014 327
0701020 423
0701022 278
0701025 276
0701026 329
0710827 327
0711014 ..... 316, 322
0711020 ..... 314, 320
0711215 270
0711216 327
0711223 ..... 316, 322
0711414 ..... 355, 357
0720804 35
0721005 ..... 541, 543
0721006 ... 173, 177, 181, 293, 295, 297, 367, 369, 377, 479, 483
0721008 .... 174, 178, 182
0731005 ..... 537, 539
0741605 ... 258, 264, 270, 276
0741606 ..... 437, 441
0741607 ... 379, 383, 388, 391, 399, 407, 411
0741609 21
0760605 ... 258, 264, 270, 276, 325
0760606 412
0760608 ..... 314, 320
0760610 ... 314, 320, 327, 373, 411
0760612 ..... 96, 100, 104, 108, 112, 116, 120, 124, 128, 132, 136, 140, 144, 148, 152, 156, 314, 320
0760615 327
0760807 325
0760810 ... 258, 264, 270, 276, 302, 306, 314, 320, 427
0760812 .... 314, 320, 671
0760814 .... 276, 314, 320
0760815 .... 276, 314, 320
0760817 327
0761008 ... 234, 238, 245, 302, 306
0761012 423
0761014 ... 314, 320, 365, 427
0761015 ... 260, 266, 270, 276, 314, 320, 423
0761016 .... 314, 320, 373
0761018 411
0761210 ... 258, 264, 270, 276
0761212 417
0761216 427
0771014 ..... 314, 320
0771212 ... 233, 237, 241, 245, 258, 264, 276
0771414 ... 222, 226, 258, 264, 270, 276
0771415 ... 260, 266, 270, 276, 379, 388, 396, 404
0801132 ..... 417, 421
0801496 421
0801594 421
0811608 ... 65, 67, 69, 71, 73, 75, 77, 79, 81
0811610 .... 186, 190, 194
0811612 ..... 89, 91
0811812 ... 173, 177, 181, 186, 190, 194
0860038 ... 388, 391, 399, 403, 407, 411, 631, 633
0860520 507
0861538 .... 404, 407, 411
0861572 ..... 396, 399
0861642 ..... 203, 205
0861731 ... 651, 655, 659, 661, 747, 749, 751
0861781 ... 643, 647, 743, 745
0861880 ..... 691, 695
0902143 .... 173, 177, 181
0902161 .... 173, 177, 181
0902219 .... 173, 177, 181
0902223 .... 173, 177, 181
0902412 .... 173, 177, 181
0902426 .... 173, 177, 181
0902491 .... 173, 177, 181
0902888 ... 387, 391, 395, 399, 403, 407, 411
0903088 ..... 203, 205
0903242 63
0903308 173
0903697 687
0940049 .... 173, 177, 181, 186, 190, 194
0940070 .... 222, 226, 258, 264, 270, 276, 316, 322
0940071 ..... 173, 177, 181
0940088 ..... 174, 178, 181
0940092 .... 537, 539, 541, 543
0940094 .... 537, 539, 541, 543
0940102 ..... 527, 529
0940103 541
0940133 543
0940134 537
0940177 539
0961845 .... 445, 449, 455, 457, 459, 461, 467, 469, 471
0961893 565
0961897 577
0961947 425
0961986 .... 222, 226, 258, 264, 270, 276, 314, 320
0962051 ..... 363, 365
0962102 15, 17, 419, 421, 563, 567, 569
0962122 421
0962152 ..... 21, 573
0962181 21
0962270 ..... 463, 473
0962336 565
0962348 21
0962449 377
0962520 .... 379, 383, 387, 391, 396, 399, 404, 407, 411
1001001939 ..... 222, 226
1001080707 ..... 65, 67, 71
1001091460 25
1001091461 25
1001091969 641
1001091970 645
1001091973 649
1001091974 653
1001091975 657
1001093382 ..... 89, 91
1001094400 ..... 437, 441, 820
1001094475 823
1001094595 ..... 217, 219, 249, 251, 253, 255, 309, 311, 339
1001096141 772
1001096736 ..... 437, 441
1001097051 ..... 673, 675, 677, 679, 757
1001097082 ..... 673, 675, 677, 679
1001097150 691
1001097244 555
1001098012 ..... 509, 512, 515
1001098122 ..... 489, 741
1001098149 509
1001098167 559
1001098828 427
1001099121 174
1001099137 173
1001099138 ..... 173, 174
1001099366 ..... 527, 529
1001099367 ..... 527, 529
1001099837 429
1001099869 377
1001100234 377
1001100321 377
1001100341 743
1001100342 745
1001100345 747
1001100346 751
1001100347 749
1001100825 ..... 309, 311, 347
1001101191 ..... 641, 643, 645, 647, 649, 651, 653, 655, 657, 659, 661, 691, 693, 695
1001101196 ..... 641, 643, 645, 647
1001101197 ..... 649, 651, 653, 655, 657, 659, 661
1001101421 529
1001101422 529
1001101600 ..... 211, 213
1001101623 174
1001101673 174
1001102290 697
1001102291 697
1001102304 697
1001103308 . 95, 99, 103, 107, 111, 115, 119, 123, 127, 131, 135, 139, 143, 147, 151, 155
1001103667 95, 103, 111, 115, 119, 127, 135, 139, 143, 151, 819
1001103810 ..... 19, 21
1001104519 761
1001106450 533
1001106736 . 95, 99, 103, 107, 111, 115, 119, 123, 127, 131, 135, 139, 143, 147, 151, 155
1001106938 ..... 479, 483, 819
1001106957 ..... 592, 598
1001106974 63
1001107469 533
1001107497 533
1001107529 63
1001108256 539
1001108721 822
1001108962 823
1001109654 ..... 687, 689, 691
1001109690 ..... 609, 613
1001110166 ..... 186, 190, 194
1001110425 47, 205, 211, 214, 233, 237, 241, 245
1001110434 ..... 479, 483

1001110872.....663, 665
1001110873.....388, 392, 403, 407, 412, 631
1001110974.....824
1001111514.....77, 79, 81
1001112551.....776
1001112588.....367
1001112589.....367, 377
1001112612.....669, 735
1001112796.....669
1001113047.....186, 190, 194
1001113961.....735
1001115387.....403
1001115389.....395
1001115405.....367
1001115409.....377
1001115918.....822
1001116208.....809
1001116290.....187, 191, 195
1001116456.....197
1001116457.....201
1001116692.....685
1001116693.....699, 709
1001116694.....736
1001116695.....763
1001116710.....711
1001116727.....701, 719, 721
1001116728.....701
1001116733.....719
1001116734.....719
1001116748.....673, 675, 677, 679
1001116774.....669
1001116808.....669
1001116812.....705, 735
1001116815.....706, 735
1001116952.....701, 706
1001116983.....711
1001117078.....729
1001117106.....701, 706
1001117107.....701, 706
1001117140.....178, 182
1001117172.....489
1001117174.....479, 483, 489, 818
1001117219.....187, 191, 195
1001117234.....186, 190, 194
1001117249.....186, 190
1001117294.....823
1001117307.....186, 190, 194
1001117308.....259, 265, 271, 277, 819
1001117372.....559
1001117598.....186, 190, 194
1001118133.....77, 79, 81
1001118384.....759
1001118388.....759
1001118666.....417, 419
1001119020.....669, 735, 741
1001119563..... 823
1001119602..... 609, 612
1001119619..... 755
1001119620..... 753, 757
1001119939..... 822
1001119947..... 822
1001119968..... 399, 407, 729
1001120328..... 501, 503
1001120471..... 555
1001120477..... 555
1001120484..... 555
1001120962..... 187, 191, 195
1001120989..... 809
1001121122..... 194
1001121123..... 194
1001125125..... 679
1001125127..... 679
1001125387..... 809
1001125492..... 53
1001126009..... 759
1001126351..... 701, 706
1001126352..... 701
1001126356..... 701
1001126357..... 701
1001126362..... 702, 705
1001126363..... 702, 705
1001126364..... 702, 705
1001126365..... 702
1001126384..... 701
1001126391..... 702, 705
1001126392..... 702, 705
1001126485..... 705
1001126487..... 705
1001127094..... 809
1001128527..... 523
1001128556..... 523
1001128901..... 315, 321
1001129555..... 818
1001129858..... 387
1001131168..... 772
1001131269..... 772
1001133714..... 702, 705, 713
1001133715..... 702, 705, 713
1001133956..... 701, 706
1001133957..... 701, 706
1001134289..... 423, 425
1001134488..... 259, 265, 272, 315, 322
1001135138..... 259, 265, 271, 277
1001135650..... 702, 705, 713
1001135651..... 702, 705
1001135679..... 259, 265
1001136104..... 411
1001136358..... 608, 612
1001136400..... 429
1001136834..... 259, 265, 271, 277
1001136881..... 608, 612
1001137005..... 825
1001137276..... 259, 265, 271, 277
1001137336..... 311
1001137364..... 103, 107, 115, 127, 131, 139, 151, 155, 483
1001137440..... 824
1001137460.... 89, 91, 93
1001137672..... 824
1001137673..... 501
1001138110..... 701
1001138111..... 701
1001138113..... 701
1001138173..... 259, 265, 271, 277, 315, 321
1001138175..... 259, 265, 271, 278, 315, 321
1001138228..... 259, 265, 271, 277
1001138248..... 259, 265, 271, 277, 315, 321
1001138489..... 259, 266, 271, 278
1001138491..... 233, 237, 241, 245, 711
1001138494..... 449, 455, 457, 459, 461, 467, 469, 471
1001138514..... 449, 455, 457, 461, 467, 471
1001138557..... 259, 265, 271, 277
1001138565..... 379
1001138566..... 379, 383, 387, 392
1001138671..... 417
1001138795..... 565
1001138827..... 259, 265, 272
1001139099..... 823
1001139135..... 479, 484, 685
1001139240..... 259, 265, 278
1001139357..... 380, 387
1001139409..... 259, 265, 271, 277
1001139654..... 809
1001139952..... 387
1001140312..... 266
1001140346..... 391
1001140347..... 383
1001140429..... 445, 449, 455, 457, 459, 461, 467, 469, 471
1001140448..... 259, 265, 271, 278
1001140450..... 259, 265, 271, 278
1001140454..... 259, 265, 271, 278
1001140564..... 259, 265, 272
1001141300..... 809
1001141302..... 809
1001141304..... 259, 265, 271, 277
1001141370..... 259, 265, 271, 277
1001141419.....271
1001141421.....407
1001141422.....399
1001141585.....259, 265, 271, 277, 315, 321
1001141586.....271
1001141718.....297
1001141870.....293, 295
1001141995.....259, 265, 271, 277, 315, 321
1001142031.....359, 361
1001142032.....359, 361
1001142501.....233, 237, 241, 293, 295, 297
1001142504.....824
1001142505.....824
1001142623.....271
1001142643.....383, 392, 400, 408
1001142645.....383, 400
1001142646.....392, 408
1001142683.....169, 171, 819
1001142722.....169, 171
1001142736.....169, 171, 669
1001142938.....701, 705
1001142940.....702, 705
1001142941.....702, 705
1001143390.....223, 227, 259, 265, 271, 277
1001143449.....359, 361
1001143483.....361
1001143484.....359
1001143525.....359, 361
1001143607.....177, 178
1001143609.....177
1001143611.....178
1001143726.....259, 265, 277, 701
1001143736.....233, 237, 241, 245
1001143797.....259, 265, 271, 277
1001143852.....809
1001143858.....177, 182
1001143860.....359
1001143907.....260, 265, 271, 277
1001144433.....501
1001144438.....205
1001144447.....205
1001144527.....199
1001144629.....447, 451, 453, 459, 465, 469
1001145154.....260, 265, 271, 278
1001145405.....509, 512
1001146273.....222, 226
1001146588.....242, 272
1001147264.....701, 706
1001147812.....222, 226
1001147813.....222, 226
1001147820.....222, 226
1001147823.....222, 226, 229
1001148138.....369

1001148652 419
1001148675 ..... 663, 665
1001148841 713
1001148842 713
1001148902 823
1001148903 823
1001148904 823
1001148905 823
1001148906 823
1001148971 823
1001149160 325
1001149410 ..... 609, 613
1001149639 ..... 315, 321
1001149673 ..... 178, 182
1001149703 355
1001149704 ..... 222, 226
1001149705 ..... 222, 226
1001149706 ..... 222, 226
1001149793 ..... 223, 227
1001149908 343
1001149994 ..... 167, 169, 171
1001150260 ..... 173, 177, 182, 186, 190, 194
1001150372 ..... 19, 21
1001150406 167
1001150539 .. 19, 21, 573
1001150561 197
1001150890 357
1001150915 ..... 223, 227
1001150918 ..... 213, 238, 306
1001150937 ..... 19, 21
1001150998 ..... 223, 227
1001151010 35
1001151034 19
1001151070 ..... 211, 213
1001151252 357
1001151253 355
1001151354 ..... 586, 592, 598, 604
1001151856 702
1001151980 19
1001152175 . 95, 99, 103, 107, 111, 115, 119, 123, 127, 131, 135, 139, 143, 147, 151, 155
1001152429 ..... 396, 405, 725
1001152457 ..... 387, 392
1001152459 ..... 223, 227
1001152483 693
1001152489 ..... 260, 266, 271, 277
1001152520 400
1001152525 ..... 396, 400, 404, 408, 412
1001152532 ..... 380, 384, 388, 392, 715
1001152566 178
1001152719 15
1001152965 823
1001153197 ..... 380, 387, 721
1001153259 ..... 384, 392, 723
1001153282..... 223, 227, 258, 266, 277, 335
1001153359..... 233, 237, 241, 245, 302, 307
1001153396..... 217, 222
1001153414..... 223, 227
1001153435..... 178
1001153713.. 95, 99, 103, 107, 111, 115, 697
1001153749..... 437, 441
1001153779..... 219, 226
1001154126..... 559
1001154231..... 823
1001154236..... 211, 217
1001154237..... 213, 219
1001154238..... 211
1001154405..... 233, 237, 241, 293, 295, 297, 353
1001154584..... 15
1001154687..... 559
1001154875..... 17
1001154931..... 21
1001155035..... 21
1001155041..... 373
1001155043.. 95, 99, 103, 107, 111, 115, 119, 123, 127, 131, 135, 139, 143, 147, 151, 155
1001155044.. 95, 99, 104, 107, 111, 115, 119, 123, 127, 131, 135, 139, 143, 147, 151, 155, 480, 484
1001155045.. 96, 99, 104, 107, 111, 115, 119, 123, 127, 131, 135, 139, 143, 147, 151, 155, 480, 484, 820
1001155143..... 211, 213
1001155192..... 21
1001155194..... 17
1001155673..... 609, 612
1001155823..... 233, 237, 241, 245
1001155895..... 186, 190, 194
1001155899..... 186, 190, 194
1001156107..... 272
1001156136..... 53
1001156172..... 823
1001156188..... 186
1001156190.... 65, 67, 69, 71, 73, 75, 77, 79, 81
1001156332..... 586, 592, 598, 604
1001156333..... 586, 592, 598, 604
1001156693..... 677
1001156695..... 677
1001156710..... 15, 17
1001156798..... 61
1001157013..... 825
1001157016..... 23
1001157049..... 59
1001157058..... 59
1001157208..... 187, 195
1001157209..... 187, 191, 195
1001157400..... 581
1001157520..... 396, 404, 408, 412
1001157521..... 396, 400, 404, 408, 412
1001157525..... 395, 396, 399, 400
1001157528..... 396, 400, 404, 408, 412
1001157592..... 403, 404, 408, 412
1001157612..... 186, 190, 194
1001157726..... 186, 190, 194
1001157769..... 396, 405
1001157867..... 186, 190, 194
1001158007..... 396, 400, 404, 408, 412
1001158008..... 396, 400, 404, 408, 412
1001158077..... 186, 190, 195
1001158167..... 197
1001158175..... 186, 190, 195
1001158187..... 37
1001158188..... 37
1001158203..... 37
1001158258..... 39
1001158259..... 822
1001158364..... 161
1001158522..... 39, 41
1001159118..... 663, 665, 818
1001159119..... 663, 665
1001159120..... 663, 665
1001159121..... 665
1001159186..... 735
1001159256..... 480, 484, 820
1001159323..... 808
1001159340..... 597, 604
1001159707..... 609, 613
1001160077..... 167
1001160272..... 635
1001160780..... 39, 41
1001161089..... 186, 190, 195
1001161355..... 19, 21
1001161399..... 19, 21
1001162335..... 260, 266, 293
1001162497..... 211, 214, 233, 237, 241, 245, 302, 307
1001162546..... 824
1001162915..... 191
1001163101..... 199
1001163131..... 529
1001163599..... 369, 383, 392, 399, 407
1001164786..... 823
1001165035 ..... 233, 237, 241, 245, 316, 320
1001165350 423
1001165368 ..... 379, 384, 695
1001165657 ..... 19, 21
1001165776 ..... 119, 123, 128, 131, 135, 140, 699
1001165842 271
1001166538 ..... 480, 484, 491
1001166539 ..... 480, 484, 493
1001166806 41
1001167042 ..... 260, 266, 271, 277
1001167565 427
1001167567 427
1001167596 427
1001167632 705
1001167635 705
1001168018 ..... 315, 321
1001168402 427
1001169054 ..... 260, 266, 272, 277, 315, 321
1001169138 ..... 260, 266, 272, 277, 315, 321
1001169754 31
1001169755 31
1001169756 31
1001169757 31
1001169967 ..... 315, 321
1001170035 ..... 315, 321
1001170764 705
1001170808 . 96, 99, 104, 107, 111, 116, 120, 123, 128, 131, 136, 140, 143, 147, 152, 155, 765
1001170847 ..... 437, 441, 820
1001171016 687
1001171125 391
1001171131 663
1001171403 702
1001171482 96, 104, 112, 116, 120, 128, 136, 140, 144, 152
1001172271 ..... 441, 820
1001172577 527
1001172578 527
1001172760 ..... 480, 484
1001173535 ..... 316, 322
1001173703 809
1001173876 190
1001173878 199
1001173897 .... 69, 73, 75
1001174040 427
1001174277 191
1001174408 ..... 187, 195
1001174486 ..... 302, 307
1001174745 ..... 359, 361
1001174746 361
1001176027 ..... 249, 258
1001176035 ..... 251, 264
1001176329 ..... 315, 321

1001176469.....112, 116, 136, 140
1001176862.....663
1001177035.....380, 384, 689
1001177359.....260, 266, 272, 278
1001177694.....823
1001177710.....689
1001177844.....260, 266, 272, 277
1001177845.....260, 266, 272, 277
1001178057....69, 71, 79, 83
1001178174.....69
1001178175.....79
1001178178.....213
1001178204.....585
1001178205.....591
1001178207.....822
1001178208.....822
1001178223.....260, 266, 272, 278
1001178797.....353
1001178876.....260, 266
1001179040.....65, 67, 71
1001179079.....609, 613
1001179154.....404, 408, 412
1001179329.....608, 612
1001179837.....369
1001179912.....379
1001180001.....369
1001180052.....370
1001180218.....383
1001180287.....369
1001180620.....260, 266, 272, 277, 315, 321
1001180861.....809
1001181045.....691, 695, 818
1001181243.....370
1001181895.....266
1001181899.....260, 264, 272, 277
1001181923.....673, 675, 677, 679
1001182162.....609, 613
1001182361.....706
1001182365.....706
1001182570.....437, 441, 820
1001182599.....823
1001182806.....163
1001182997....65, 67, 69, 71, 73, 75, 77, 79, 81
1001183226.....609, 613
1001184569.....823
1001184618.....776, 780, 784, 788, 792, 796, 800, 804
1001184626.....475, 477
1001184682.....165
1001185281.....480, 484
1001185667.....233, 249
1001185670.....233
1001185671..... 237, 251
1001185672..... 237
1001186251..... 186, 190, 195
1001186254..... 187, 191, 195
1001186333..... 463
1001186334..... 473
1001186375..... 449
1001186378..... 455
1001186379..... 457
1001186382..... 467
1001186383..... 465
1001186384..... 453
1001186385..... 451
1001186387..... 447
1001186426..... 315, 321
1001186431..... 501, 820, 824
1001186432..... 759, 761
1001186517..... 501
1001186985..... 260, 266, 272, 278
1001187674..... 499
1001187681..... 755
1001187781..... 314, 320
1001188135..... 586, 592, 598, 604
1001188622..... 427
1001188842..... 577
1001188844..... 427
1001188874 96, 100, 104, 108, 112, 116, 120, 124, 128, 132, 136, 140, 144, 147, 152, 156
1001188884..... 351
1001188887..... 351
1001188972..... 213, 238, 307
1001189001..... 427
1001189002..... 427
1001189171..... 693, 818
1001189172..... 693, 818
1001189979..... 316, 321
1001190610..... 260, 266, 272, 278
1001190888..... 824
1001190985..... 427
1001191395..... 823
1001191525..... 809
1001191599..... 291
1001191610..... 315, 321
1001191620..... 242, 272
1001192027..... 417
1001193018..... 641, 643, 645, 647, 649, 651, 653, 655, 657, 659, 661
1001195304..... 823
1001195533..... 823
1001195967..... 359
1001196382..... 412
1001196634..... 299, 818, 819
1001196768..... 187, 191, 195
1001197017..... 537, 539, 541, 543
1001197408..... 809
1001197719..... 705
1001198333..... 586, 591
1001198336..... 581
1001198338..... 585, 591, 597, 603
1001198339..... 581
1001198340..... 585, 591, 598, 603
1001198341..... 586, 604
1001199394..... 585, 591, 597, 603
1001199488..... 824
1001199733..... 351
1001200054..... 433
1001200120..... 809
1001200121..... 809
1001200122..... 809
1001200124..... 809
1001200125..... 809
1001200126..... 809
1001200127..... 809
1001200491..... 427
1001200494..... 427
1001200497..... 437, 441, 735
1001200700..... 823
1001200910..... 169
1001201351..... 427
1001201885..... 735, 741
1001202280..... 351
1001202281..... 351
1001202368..... 259, 265, 272
1001202687..... 427
1001202749..... 823
1001203655..... 463
1001203656..... 473
1001204269..... 592, 598
1001204325..... 260, 266, 272, 278
1001204560.. 15, 17, 559
1001204667..... 351
1001204715..... 437, 441
1001204725..... 427
1001204939..... 437, 442, 820
1001205690..... 667, 693
1001205958..... 649, 651, 653, 655, 657, 659
1001206250..... 651
1001206251..... 655
1001206252..... 659
1001206253..... 643
1001206254..... 647
1001206255..... 661
1001206311..... 824
1001206476..... 671
1001206477..... 824
1001207004..... 171
1001207558..... 173, 177, 182
1001207969..... 433
1001208994..... 427, 433
1001209059..... 824
1001209432..... 671
1001209474..... 671
1001209632.....823
1001209664.....501
1001209982.....33
1001210025.....824
1001210026.....824
1001210448.....327, 331
1001210636.....555
1001211582.....438, 442
1001211588.....437, 441
1001211794.....325, 327
1001212223.....399, 407
1001212415.....818
1001213447.....741
1001213584.....631, 633, 637, 667, 689
1001213585.....631, 633, 637, 667, 689
1001213705.....417
1001213810.....325
1001213882.....480, 484
1001214030.....809
1001214552.....824
1001214561.....824
1001214562.....824
1001214570.....671
1001214571.....671
1001214827.....327
1001215016.....709
1001215091.....709
1001215289.....608, 612
1001215296.....585, 591, 597, 603
1001215384.....327
1001215534.....709
1001215681.....315, 321
1001215974.....315, 321
1001216015.....369
1001216065.....325, 327
1001216071.....327
1001216075.....315, 321
1001216092.....315, 321
1001216144.....327
1001216201.....315, 321
1001216212.....709
1001216213.....709
1001216220.....343
1001216230.....144, 148, 152, 156, 709
1001216300.....329
1001216390.....412
1001216391.....374
1001216393.....321
1001216531.....316, 322
1001216532.....309, 311
1001216534.....309, 311
1001216535.....309, 311
1001216568.....302, 307
1001216619.....329
1001216630.....427
1001216768.....325
1001216769.....325
1001216910.....315, 321, 325
1001216919.....315, 321
1001216995.....321
1001217005.....169
1001217032.....315, 321

1001217046 ..... 315, 321
1001217090 ..... 315, 321
1001217170 ..... 309, 311
1001217174 ..... 315, 321
1001217175 ..... 315, 321
1001217183 ..... 315, 321
1001217185 ..... 315, 321
1001217186 ..... 315, 321
1001217191 ..... 309, 314
1001217192 ..... 303, 309
1001217195 603
1001217196 597
1001217199 302
1001217317 ..... 315, 321
1001217477 347
1001217478 347
1001217543 ..... 315, 321
1001218022 823
1001218085 ..... 309, 311
1001218089 347
1001218362 ..... 315, 322
1001218449 ..... 315, 322
1001218547 365
1001218572 ..... 89, 91
1001218622 639
1001218623 639
1001218930 412
1001219219 ..... 23, 25
1001219259 ..... 315, 322
1001219345 ..... 315, 322
1001219361 ..... 315, 322
1001219363 ..... 315, 322
1001219364 ..... 303, 307
1001219365 ..... 303, 307
1001219366 ..... 303, 307
1001219367 ..... 303, 307
1001219368 ..... 303, 307
1001219369 ..... 303, 307
1001219370 ..... 303, 307
1001219480 ..... 315, 322
1001219601 96, 100, 104, 108, 112, 116, 120, 124, 128, 132, 136, 140, 144, 148, 152, 156
1001219608 ..... 311, 320
1001219609 ..... 307, 311
1001219610 306
1001219611 ..... 315, 322
1001219612 ..... 315, 322
1001219613 ..... 315, 322
1001219618 411
1001219619 373
1001219630 374
1001219632 374
1001219633 823
1001219809 ..... 303, 307
1001219840 822
1001219881 365
1001220002 195
1001220067 195
1001220141 347
1001220189 201
1001220190 194
1001220379 701
1001220404 329
1001220510 809
1001220511 809
1001220512 809
1001220864 809
1001221203 278
1001221212 ..... 245, 277
1001221219 277
1001221397 347
1001221464 309
1001221488 ..... 302, 306
1001221498 412
1001221545 327
1001221615 ..... 316, 322
1001222033 ..... 316, 322
1001222641 327
1001222817 353
1001223042 ..... 315, 321
1001223055 772
1001223453 ..... 772, 792
1001223459 ..... 702, 705
1001223584 ..... 314, 320
1001223591 ..... 278, 289
1001223923 ..... 315, 321
1001223971 792
1001224048 800
1001224049 804
1001224050 788
1001224052 780
1001224053 796
1001224486 ..... 316, 322
1001224489 ..... 316, 322
1001224936 278
1001224937 278
1001224940 278
1001225346 ..... 671, 820
1001225430 ..... 289, 819
1001225432 ..... 290, 819
1001225442 ..... 315, 321
1001225510 ..... 316, 322
1001225580 ..... 501, 761
1001225745 ..... 217, 219, 249, 251, 253, 255, 309, 311, 337
1001226285 297
1001226400 ..... 681, 683
1001226531 671
1001226872 445
1001226923 353
1001227224 ..... 245, 297
1001227359 ..... 673, 675, 677, 679
1001227448 822
1001227488 ..... 673, 675, 677, 679, 681
1001227614 ..... 255, 276
1001227615 ..... 245, 255
1001227616 245
1001227620 245
1001227633 499
1001227634 499
1001227666 ..... 316, 322
1001227667 ..... 316, 322
1001227769 325
1001227772 327
1001227985 499
1001227987 499
1001227996 ..... 753, 757
1001228086 ..... 421, 577
1001228170 ..... 47, 49
1001228215 445
1001228224 ..... 499, 820
1001228225 ..... 499, 820
1001228243 469
1001228375 471
1001228376 459
1001228377 461
1001228949 822
1001228988 ..... 523, 525, 813, 815
1001229080 667
1001229107 822
1001229341 499
1001229530 735
1001229542 ..... 259, 265, 272
1001229762 822
1001229810 ..... 53, 56
1001230032 353
1001230635 ..... 259, 265, 272, 278
1001230931 ..... 673, 675, 677, 679
1001230934 706
1001230935 706
1001230936 706
1001231180 525
1001231183 525
1001231235 525
1001231801 808
1001231886 163
1001231888 ..... 65, 67, 69, 71, 73, 75
1001231949 551
1001231950 ..... 547, 553
1001232010 ..... 547, 549, 551, 553
1001232011 ..... 547, 551, 553
1001232164 499
1001232165 499
1001232642 503
1001232667 ..... 503, 820
1001232842 299
1001232844 ..... 272, 285
1001233047 822
1001233089 277
1001233237 822
1001233763 ..... 238, 299
1001234425 772
1001234426 772
1001234428 796
1001234429 796
1001234430 800
1001234431 804
1001234432 804
1001234433 792
1001234434 792
1001234435 788
1001234436 788
1001234437 780
1001234438 780
1001234439 ..... 776, 784
1001234588 667
1001234800 705
1001234811 ..... 423, 425
1001235585 800
1001235860 241
1001235861 ..... 242, 253
1001235862 ..... 253, 270
1001235949 ..... 242, 272, 295
1001236089 487
1001236092 159
1001236303 91
1001236304 671
1001236334 345
1001236335 345
1001236386 181
1001236387 182
1001236389 182
1001236504 671
1001236505 671
1001236552 503
1001236746 551
1001236747 547
1001236871 182
1001236891 ..... 545, 547, 549, 551, 553
1001236895 ..... 545, 547, 549, 551, 553
1001236951 823
1001237142 417
1001237667 ..... 735, 741
1001237668 ..... 735, 741
1001237862 ..... 753, 757
1001237863 ..... 499, 757
1001237864 ..... 499, 753
1001237865 ..... 499, 755
1001237882 823
1001237883 823
1001237949 417
1001238169 423
1001238263 ..... 545, 547, 549, 551, 553
1001238268 272
1001238319 499
1001238331 ..... 417, 423
1001238333 423
1001238398 423
1001238418 ..... 503, 759
1001238421 427
1001238463 553
1001238472 503
1001238495 501
1001238559 503
1001238672 487
1001238674 159
1001238732 ..... 159, 487
1001238878 ..... 272, 705
1001239202 705
1001239347 165
1001239462 91
1001239470 89
1001241385 163
1001241403 ..... 159, 487
1001241413 823
1001241415 823
1001241547 824
1001241548 824
1001241774 823
1001241776 823
1001241965 503
1001242255 169

1001242256.....171
1001242409.....822
1001243183.....822
1001243184.....822
1001243414.....187, 191, 195
1001243645.....33
1001243682.....163, 165, 767
1001243895.....299
1001244212.....808
1001245049.....33
1001245913.....272, 713
1001246142.....822
1001246473.....822
1001246474.....822
1001247013.....245
1001247073.....824
1001247358.....35
1001247359.....316, 322
1001247453.....437, 441
1001247468.....427
1001247846.....419
1001247847.....419
1001247848.....417, 419
1001248140.....545, 547, 549, 551, 553
1001248141.....545, 547, 549, 551, 553
1001249052.....824
1001249695.....822
1001249824.....429
1001249941.....822
1001249942.....259, 265, 281
1001250292.....187, 191, 195
1001250293.....186, 190, 194
1001250384.....429
1001250465.....825
1001250466.....825
1001250531.....437, 441
1001250535.....417
1001250595.....824
1001250643.....71
1001250737.....419
1001251009.....417, 569
1001251010.....417, 567
1001251041.....417, 563
1001251087.....419, 575
1001252033.....824
1001252034.....825
1001252315.....417
1001252527.....706
1001252627.....811
1001252629.....545, 547, 549, 551, 553
1001252946.....531
1001252947.....531
1001253375.....761
1001253618.....825
1001253619.....825
1001253658.....429
1001253677.....433, 435
1001253724.....429
1001253789.....437
1001253880..... 429
1001254317..... 429
1001254472..... 503
1001254473..... 503
1001254632..... 429
1001254846..... 609, 613
1001254847..... 609, 613
1001254879..... 608, 612
1001255133..... 427
1001255320..... 417, 561
1001255321..... 417, 571
1001255807..... 822
1001255880..... 437, 442
1001255882..... 438, 442
1001255901..... 736
1001256059..... 609, 612
1001256267..... 417
1001256506..... 702
1001256879..... 242
1001256906..... 808
1001257271..... 545, 549
1001257274..... 545
1001257278..... 278
1001257283..... 349
1001257397..... 417
1001257412..... 278
1001257561..... 823
1001257902..... 673, 675
1001257903..... 679
1001257904..... 677
1001257972..... 412, 727
1001258707..... 673, 675, 677, 679
1001258708..... 673, 675, 677, 679
1001258709..... 673, 675, 677, 679, 739
1001258710..... 673, 675, 677, 679
1001258711..... 673, 675, 677, 679
1001258800..... 271
1001258953..... 825
1001259466..... 609, 613
1001259467..... 609, 613
1001259468..... 609, 613
1001259470..... 609, 613
1001260277..... 47, 433
1001260412..... 260, 266, 272, 278
1001260413..... 260, 266, 272, 278
1001260432..... 270
1001260475..... 442
1001260858..... 822
1001260886..... 822
1001260937..... 484
1001260957..... 808
1001260958..... 784
1001260959..... 776
1001260960..... 796
1001260962..... 780
1001260963..... 788
1001260964..... 792
1001260965..... 804
1001260966..... 800
1001260967..... 772
1001260968..... 784
1001260969..... 772, 776, 780, 788, 792, 796, 800, 804
1001260970..... 822
1001261045..... 270
1001261085..... 270
1001261272..... 431
1001261274..... 431
1001261335..... 545
1001261336..... 549
1001261338..... 545
1001261339..... 549
1001262016..... 824
1001262102..... 808
1001262103..... 808
1001262104..... 808
1001262105..... 808
1001262959..... 825
1001263022..... 808
1001263352 96, 104, 120, 128, 144, 152
1001263353..... 112, 116, 136, 140
1001263355..... 116
1001263356..... 104, 108, 128, 132, 152, 156
1001263357..... 140
1001263360..... 127, 131
1001263361..... 103, 107
1001263362..... 115
1001263363..... 151, 155
1001263364..... 139
1001263587..... 480, 484
1001263588..... 477, 483
1001263612..... 437, 442
1001263800..... 565
1001263923..... 697, 765
1001263941..... 772, 776, 780, 784, 788, 792, 796, 800, 804
1001264148..... 822
1001264239..... 477
1001264254..... 822
1001264991..... 423, 565
1001265163..... 555
1001265342..... 555
1001265676..... 709
1001266056..... 824
1001266069..... 475, 479
1001266073..... 475
1001266098..... 824
1001266489..... 824
1001266499..... 278
1001266525..... 260, 266, 277
1001266628 96, 100, 104, 108, 112, 116, 120, 124, 128, 132, 136, 140, 144, 148, 152, 156, 735
1001266648..... 480, 484, 741
1001266807..... 824
1001266829..... 442, 763
1001266874..... 112
1001266875..... 119, 123
1001266876 96, 100, 120, 124, 144, 148
1001266878.....136
1001266893.....95, 99
1001266894.....111
1001266895.....143, 147
1001266896.....135
1001267256.....259, 265, 278
1001267312.....772, 776, 780, 784, 788, 792, 796, 800, 804
1001267678....67, 75, 81, 85
1001268736.....823
1001269187.....824
1001269389.....824
1001269629.....823
1001269630.....823
1001269631.....823
1001270068.....581
1001270069.....585, 591, 597, 603
1001270073.....591, 598
1001270089.....613
1001270090.....586, 592, 598, 604
1001270091.....586, 592, 598, 604
1001270096.....604
1001270097.....609
1001270099.....182
1001270482.....824
1001270517.....822
1001270630.....585
1001271642.....824
1001271794 96, 100, 104, 108, 112, 116, 120, 124, 128, 132, 136, 140, 144, 148, 152, 156
1001272088.....823
1001272182.....824
1001272200.....822
1001276143 96, 100, 104, 108, 112, 116, 120, 124, 128, 132, 136, 140, 144, 148, 152, 156
1001277828.....441
1001280403.....100, 108, 124, 132, 148, 156
1001280600..95, 99, 103, 107, 119, 123, 127, 131, 143, 147, 151, 155
1001284872.....67
1001284873.....75
1001284874.....81
1001285677....65, 73, 77, 87
1001285832.....73
1001285833.....77
1001285834.....65
1001290021.....173, 177, 181
1001290252.....315
1060341....537, 539, 541, 543
1060343.....404, 408, 412

1060379 ... 525, 531, 533, 535
1060545 ..... 693, 695
1060626 .... 213, 237, 306
1060637 ... 211, 213, 249, 251, 253, 255, 309, 311
1060903 ... 537, 539, 541, 543
1060908 691
1060918 489
1062255 242
10702077 . 396, 400, 404, 408, 412
10702082 . 396, 400, 404, 408, 412
10836804 . 100, 108, 124, 132, 147, 155
1120510 417
1120555 ..... 527, 529
1120601 ... 174, 178, 181, 186, 190, 194
1180346 431
1260017 ..... 39, 41, 61
1260135 43
1320011 245
1320016 ..... 222, 226
1320022 .... 211, 213, 351
1320061 ... 233, 238, 241, 245
1320110 ..... 314, 320
1320127 35
1320176 ..... 211, 213
1320177 ..... 509, 512
1320218 35
1320220 35
1320223 . 77, 79, 81, 222, 226
1320224 ..... 211, 214
1320250 431
1320256 ... 673, 675, 677, 679
1320288 429
1320289 429
1320302 ... 512, 517, 519, 523
1320318 ... 379, 383, 387, 391, 395, 399, 403, 407
1321283 ..... 302, 306
1321339 ... 211, 213, 233, 238, 241, 245, 302, 306
1321384 .... 174, 178, 182
1380147 ..... 363, 365
1580012 505
1580013 824
1600244 825
1670603 661
1670842 ... 173, 177, 181, 186, 190, 194
1670844 417
1670850 417
1671034 423
1671092 ... 404, 408, 412, 635
1671093 .... 512, 519, 635
1671228 ... 173, 174, 177, 178, 181, 182
1671230 174
1671231 .... 174, 178, 182
1671232 .... 174, 178, 182
1671233 173
1671314 ..... 479, 483
1700818 808
1701499 ... 772, 776, 780, 784, 788, 792, 796, 800, 804
1701501 ... 772, 776, 780, 784, 788, 792, 796, 800, 804
1701505 ... 211, 213, 233, 237, 241, 245, 808
1701509 ... 527, 529, 772, 776, 780, 784, 788, 792, 796, 800, 804
1701518 ..... 776, 784
1701542 .... 302, 306, 808
1701543 .... 302, 306, 808
1702565 ..... 479, 483
1702566 ..... 479, 483
1702567 ..... 479, 483
1702720 808
1702773 .... 463, 473, 808
1702774 808
1702861 808
1702868 ... 523, 525, 772, 808, 811, 815
1702938 ... 537, 539, 541, 543
1702941 .... 213, 237, 306
1702942 .... 213, 237, 306
1702943 .... 213, 237, 306
1702944 .... 213, 237, 306
1703162 ... 222, 226, 258, 264, 270, 276, 314, 320
1703482 ... 772, 776, 780, 784, 788, 792, 796, 800, 804
1703797 772
1703804 772
1703805 772
1703811 ... 772, 776, 780, 784, 788, 792, 796, 800, 804
1703814 ... 772, 776, 780, 784, 788, 792, 796, 800, 804
1703923 804
1703924 792
1703925 788
1703926 796
1703927 800
1703935 804
1703936 792
1703937 788
1703938 796
1703939 800
1703942 792
1703943 .... 780, 788, 804
1703944 796
1703945 800
1703947 804
1703948 792
1703949 788
1703950 796
1703951 800
1703953 772
1703959 .... 772, 776, 780, 784, 788, 792, 796, 800, 804
1703980 796
1703981 800
1703982 788
1703983 804
1703984 792
1704000 ..... 792, 808
1704001 ..... 804, 808
1704260 ..... 479, 483
1704271 808
1704277 .... 772, 776, 780, 784, 788, 792, 796, 800, 804
1704412 .... 772, 776, 780, 784, 788, 792, 796, 800, 804
1704578 39
1704885 808
1704972 808
1705014 ..... 463, 473
1705090 39
1705305 .... 523, 525, 811, 813, 815
1705325 ..... 641, 643
1705336 772
1705344 796
1705347 792
1705348 788
1705351 772
1705355 ..... 813, 815
1705358 529
1705374 .... 388, 391, 663, 665
1705375 .... 405, 409, 412, 523, 815
1705387 .... 388, 391, 405, 409, 412
1705426 796
1705427 800
1705429 792
1705460 .... 396, 400, 404, 409, 412
1705461 ..... 396, 400
1705489 .... 379, 383, 396, 400
1705490 811
1705822 ..... 776, 784
1705828 ..... 776, 784
1705836 808
1705837 808
1705886 808
1705895 780
1705896 780
1705897 780
1705898 780
1705902 780
1705905 780
1705917 804
1705921 ..... 776, 784
1705961 ..... 776, 784
1705967 ..... 780, 808
1705968 ..... 788, 808
1705969 ..... 800, 808
1705977 ... 776, 780, 784, 788, 792, 796, 800, 804
1705980 809
1706059 808
1706060 808
1706061 808
1706062 808
1706063 809
1706064 808
1706098 808
1706385 ..... 463, 473
1706510 535
1706957 41
1706960 41
2030010 ... 509, 512, 517, 519, 523
2060025 ..... 222, 226
2080040 ... 186, 190, 194, 447, 451, 453, 459, 465, 469
2080072 .... 186, 190, 194
2110404 ... 581, 585, 591, 597, 603
2110406 ... 585, 591, 597, 603
2110408 581
2110606 ... 581, 585, 591, 597, 603
2110608 ..... 597, 603
2110808 ... 585, 591, 597, 603
2110812 ... 585, 591, 597, 603
2111616 ... 585, 591, 597, 603
2120209 47
2120210 ..... 47, 819
2130406 ... 585, 591, 597, 603
2130604 ... 585, 591, 597, 603
2130606 ... 585, 591, 597, 603
2130808 ... 585, 591, 597, 603
2131616 ... 585, 591, 597, 603
2150406 ... 585, 591, 597, 603
2151616 ... 585, 591, 597, 603
2170408 ... 585, 591, 597, 603
2170504 ... 585, 591, 597, 603
2170506 ..... 597, 603
2170706 ..... 597, 603
2180348 ... 211, 213, 316, 322, 351
2180387 35
2180388 35
2180389 35
2180418 ..... 35, 302, 306, 316, 322
2180467 ..... 314, 320
2180832 ... 233, 237, 241, 245, 509, 512

2200222.....69, 73, 75
2200233.....79, 81
2220237....585, 591, 597, 603
2220238....585, 591, 597, 603
2220252.....203, 205
2220261.....35, 316, 322
2220313....211, 213, 233, 237, 241, 245
2220315....258, 264, 270, 276
2220362.....608, 612
2220371....585, 591, 597, 603, 608, 612
2220373....585, 591, 597, 603, 608, 612
2220374....585, 591, 597, 603
2220375....585, 591, 597, 603
2220377.....608, 612
2220380....585, 591, 597, 603
2220381.....608, 612
2220415.....608, 612
2220418.....35
2220451....222, 226, 585, 591, 597, 603, 608, 612
2220466....585, 591, 597, 603, 608, 612
2220468....585, 591, 597, 603, 608, 612
2220472.....608, 612
2220473....585, 591, 597, 603, 608, 612
2220478.....608, 612
2220490.....608, 612
2220500.....608, 612
2220501.....608, 612
2220577.....608, 612
2220578....585, 591, 597, 603
2220582....585, 591, 597, 603, 608, 612
2220593.....608, 612
2220596....585, 591, 597, 603, 608, 612
2220600.....608, 612
2220603.....608, 612
2220605.....608, 612
2220671....585, 591, 597, 603
2220726.....608, 612
2220737.....608, 612
2220750.....203, 205
2220765.....608, 612
2220800....585, 591, 597, 603
2220816.....351, 353
2220852.....608, 612
2220883.....27, 435, 559, 561, 563, 567, 569, 575, 577
2220885.....559, 571, 577
2220886.....27, 563, 567, 569, 575, 577
2220888..... 27
2220899..... 608, 612
2220940... 585, 591, 597, 603
2220947..... 608, 612
2220950..... 608, 612
2221024..... 35
2221034..... 608, 612
2221036..... 608, 612
2221037..... 203, 205
2221086..... 608, 612
2221176... 211, 213, 302, 306
2221197..... 35, 302, 306
2300016..... 23
2400060... 299, 555, 725, 727, 735, 736, 741
2400064.... 725, 727, 819
2410014..... 463, 473
2420203.... 367, 369, 373
2460048..... 395, 403
2460051..... 373
2460055..... 367
2560136..... 479, 483
2560187.... 187, 191, 195
2580024.... 213, 237, 306
2580062..... 227
2600209.... 174, 178, 182
2600233.... 174, 178, 182
2600244.... 173, 177, 181
2600281... 447, 451, 453, 459, 465, 469
2720015.... 258, 264, 276
2720058... 211, 213, 316, 320, 351
2720144..... 35
2720160..... 509, 512
2720340... 258, 264, 270, 276
2720398..... 222, 226
2720545..... 203, 205
2750532... 211, 213, 234, 238, 241, 245
2751399... 586, 592, 598, 604
2751500... 586, 592, 598, 604
2752434... 586, 592, 598, 604, 609, 613
2752461..... 609, 613
2752468..... 609, 613
2752484..... 608, 613
2752489... 586, 592, 598, 604
2752494..... 609, 613
2752495... 586, 592, 598, 604
2752723..... 609, 613
2752754... 586, 592, 598, 604
2752766..... 609, 613
2752767..... 608, 612
2752768..... 608, 613
2752930..... 609, 613
2752938... 586, 592, 598, 604
2752978..... 609, 613
2752995..... 608, 612
2752997... 586, 592, 598, 604
2753008..... 609, 613
2753010..... 609, 613
2753118..... 608, 613
2753123..... 609, 613
2753189..... 609, 613
2753190..... 608, 612
2753191..... 609, 613
2753192..... 609, 613
2753195..... 609, 613
2753196..... 609, 613
2753197..... 609, 613
2753199..... 609, 613
2753200..... 609, 613
2753231..... 609, 613
2753274..... 609, 613
2753442..... 608, 612
2753542... 585, 591, 598, 604
2753622... 585, 591, 597, 603
2753626... 585, 592, 598, 603
2753628..... 585, 604
2753634... 585, 592, 598, 603
2753656..... 597, 604
2753686... 585, 591, 597, 603
2753732..... 597, 604
2753879..... 597, 604
2753970..... 586, 604
2753971... 585, 591, 597, 603
2754337... 585, 591, 597, 603
2754338... 585, 591, 598, 603
2754512..... 586, 604
2754720..... 591, 598
2754743..... 591, 598
2792700..... 41
2820019..... 717
2820031... 367, 369, 373, 377, 379, 383, 387, 391, 396, 399, 404, 407, 411, 681
2820035..... 299
2820118..... 681, 683
2820233..... 174
2820234..... 174
2820235..... 174
2820247..... 753, 757
2840016..... 363, 365
2860012..... 367
2860030 95, 99, 103, 107, 111, 115, 119, 123, 127, 131, 135, 139, 143, 147, 151, 155, 819
2900708..... 47
2900756..... 23
2900792... 561, 563, 565, 567, 569
2902212..... 527, 529
2902217.... 512, 517, 519
2902396.....823
2902443.....697, 701, 705
2910887.....822
2915094.....59, 825
2915228.....824
2920028....479, 483, 537, 539, 541, 543
2920029....479, 483, 537, 539, 541, 543
2920129.....741
2920161.....167
2940045.....186, 190, 194
2940074....447, 451, 453, 459, 465, 469, 819
2940088.....174, 178, 182
2940173.....187, 191, 194
2940188.....174, 178, 181
3020021.....335
3020029.....59
3020037.....253
3020039.....15, 17
3160348.....23, 27
3200401....223, 227, 258, 264, 270, 276, 355, 357
3200406.....222, 226
3250030.....187, 191
3250872.....39
3251102....367, 369, 373, 377, 379, 383, 387, 391
3251242....645, 647, 649, 651, 653, 655, 657, 659, 661, 808
3251243....367, 373, 388, 391, 405, 409, 412, 772, 792, 796
3251813.....808
3252347.....772
3252507.....377
3252764....395, 399, 403, 407, 411
3271601.....182, 429
3271605....429, 545, 547, 549, 551, 553
3271801....258, 264, 270, 276
3271805.....63, 463, 473
3272001....545, 547, 549, 551, 553
3290405....302, 306, 555, 641, 643, 645, 647, 649, 651, 653, 655, 657, 659, 661
3290505.....302, 306, 377
3290601....187, 191, 195, 314, 320, 327, 373, 411
3290605.....96, 100, 104, 108, 112, 116, 120, 124, 128, 132, 136, 140, 144, 148, 152, 156, 314, 320, 509, 512
3290606....449, 455, 457, 461, 467, 471
3290607....169, 171, 314, 320
3290801....276, 302, 306, 314, 320
3290805.....314, 320, 671

3290806 427
3291001 .... 314, 320, 427
3291005 ... 260, 266, 270, 276, 314, 320, 423, 427
3291007 365
3291201 ... 314, 320, 374, 411, 427
3291205 427
3300007 23
3300151 ... 445, 449, 455, 457, 459, 461, 467, 469, 471, 512, 517, 519, 523
3300205 95, 99, 103, 107, 111, 115, 119, 123, 127, 131, 135, 139, 143, 147, 151, 155
3300353 95, 99, 103, 107, 111, 115, 119, 123, 127, 131, 135, 139, 143, 147, 151, 155, 479, 483
3300364 .... 186, 190, 194
3300396 ... 387, 392, 396, 400, 404, 408, 412
3300408 95, 99, 103, 107, 111, 115, 119, 123, 127, 131, 135, 139, 143, 147, 151, 155, 159, 487
3300430 501
3300454 ..... 203, 205
3310401 .... 258, 264, 276
3310601 ..... 363, 365
3310605 ..... 437, 441
3310801 ..... 437, 441
3310805 35
3311001 ... 173, 174, 177, 178, 181, 182, 293, 295, 297, 396, 400, 404, 408, 412
3311005 ... 367, 369, 373, 377, 388, 391, 395, 400, 404, 408, 411, 479, 483, 509, 512, 517, 519, 523
3311401 39, 41, 537, 539, 541, 543
3311405 95, 99, 103, 107, 111, 115, 119, 123, 127, 131, 135, 139, 143, 147, 151, 155, 163, 165, 173, 177, 181, 186, 190, 194, 197, 199, 203, 205, 207, 211, 214, 217, 219, 222, 226, 233, 237, 241, 245, 249, 251, 253, 255, 258, 264, 270, 276, 302, 306, 309, 311, 359, 361, 379, 383, 433, 437, 441, 475, 477, 503, 507, 641, 643, 645, 647, 649, 651, 653, 655, 657, 659, 661, 667, 671, 687, 689
3311501 ... 174, 178, 181, 186, 190, 194, 437, 441, 537, 539, 541, 543
3311505 ... 23, 77, 79, 81, 173, 177, 181, 187, 191, 195, 222, 226, 258, 264, 270, 276, 399, 407, 411, 433, 531, 533, 535
3311508 ... 387, 391, 395, 403
3311601 ... 65, 67, 69, 71, 73, 75, 173, 177, 181, 186, 190, 194, 431, 480, 484, 503
3311602 431
3311605 ... 35, 65, 67, 69, 71, 73, 75, 77, 79, 81, 173, 174, 177, 178, 181, 186, 190, 194, 197, 199, 201, 205, 207, 211, 213, 222, 226, 258, 264, 270, 276, 293, 295, 297, 302, 306, 353, 355, 357, 363, 367, 377, 429, 431, 463, 473, 475, 477, 512, 517, 519, 523
3311705 ... 367, 369, 373, 377
3311801 ..... 23, 211, 213, 249, 251, 253, 255, 369, 379, 383, 388, 391, 395, 399, 404, 407, 437, 441
3311805 ... 222, 226, 309, 311, 355, 357, 363, 365
3312001 43
3312002 ..... 53, 545, 547, 549, 551, 553
3312005 ..... 527, 529
3312205 ..... 527, 529
3312602 .... 167, 169, 171
3321501 .... 174, 178, 181
3322201 63
3340764 429
3340828 421
3340835 ..... 417, 421
3340840 429
3340859 431
3340871 419
3340881 421
3340941 429
3340943 429
3340956 ..... 527, 529
3340966 21
3380434 ..... 475, 477
3380444 .... 173, 177, 181
3420292 ..... 39, 41
3420372 43
3420447 43
3421453 ..... 509, 512
3421565 61
3422417 ..... 19, 21
3422446 ... 211, 213, 233, 237, 241, 245, 302, 306
3422457 419
3422532 .... 217, 219, 249, 251, 253, 255, 309, 311
3422661 ..... 531, 533, 535
3422681 417
3422683 417
3422684 417
3422685 417
3422686 417
3422687 417
3422690 419
3422729 417
3422790 ..... 19, 21
3422848 21
3422861 423
3422867 423
3430616 ..... 480, 484
3430816 ..... 363, 365
3450404 ..... 363, 365
3460334 ..... 527, 529
3470003 ..... 480, 484
3520026 ..... 479, 483
3520027 ..... 479, 483
3520028 ..... 367, 369, 373
3520030 194
3520031 95, 99, 103, 107, 111, 115, 119, 123, 127, 131, 135, 139, 143, 147, 151, 155
3520035 95, 99, 103, 107, 111, 115, 119, 123, 127, 131, 135, 139, 143, 147, 151, 155, 437, 441
3520054 .... 222, 226, 278, 479, 483
3520071 ..... 527, 529
3520072 .... 445, 447, 449, 451, 453, 455, 457, 459, 461, 463, 465, 467, 469, 471, 473
3520189 ..... 396, 400
3520192 ..... 396, 400
3520193 ..... 437, 441
3520198 .... 445, 447, 449, 451, 453, 455, 457, 459, 461, 465, 467, 469, 471
3537445 363
3537446 ..... 363, 365
3538047 ..... 15, 17
3570928 ..... 437, 441
3571712 173
3572423 ..... 77, 79, 81
3572606 ..... 437, 441
3572607 ..... 437, 441
3573400 .... 512, 517, 519, 523
3573642 .... 512, 517, 519, 523
3574091 ..... 541, 543
3575359 ..... 537, 539
3575874 ..... 203, 205
3576755 ..... 77, 79, 81
3576799 ..... 509, 512
3577121 .... 512, 517, 519, 523
3580134 377
3580158 ..... 367, 377
3580276 ..... 367, 369
3580314 411
3580317 ... 379, 383, 388, 391, 396, 399, 404, 407, 411
3580318 ... 388, 391, 404, 407
3580319 ... 379, 383, 396, 399
3580320 ... 258, 264, 379, 388, 396, 404
3580324 373
3600386 .... 203, 205, 207
3641569 ..... 537, 539
3720021 ..... 203, 205
3740049 95, 99, 103, 107, 111, 115, 119, 123, 127, 131, 135, 139, 143, 147, 151, 155, 820
3740067 ... 222, 226, 233, 237, 241, 245, 302, 306, 818, 819
3740080 ... 222, 226, 367, 369, 373, 377, 411, 818, 819
3740086 ..... 759, 820
3760133 419
3760170 ..... 43, 61, 525
3790012 ... 302, 306, 475, 477, 479, 483, 497
3790044 ... 217, 219, 249, 251, 253, 255, 309, 311
3820001 ..... 39, 533, 772, 776, 780, 784, 788, 792, 796, 800, 804
3820020 ... 447, 451, 453, 459, 465, 469
3841143 ... 211, 213, 233, 237, 241, 245, 302, 306, 419, 423, 427
3841203 417
3841287 ..... 15, 17, 417
3841340 ..... 47, 431
3841356 417
3841406 429
3841520 ..... 19, 21
3900054 ..... 463, 473
3900085 .... 167, 169, 171
3900210 ... 186, 187, 190, 191, 194, 195
3900232 ... 173, 174, 177, 181, 182, 429
3900239 417
3900259 419
3900262 431
3900268 95, 99, 103, 107, 111, 115, 119, 123, 127, 131, 135, 139, 143, 147, 151, 155
3900283 429
3900293 53
3900316 ... 178, 186, 190, 194
3900349 ..... 479, 483
3900363 .... 187, 191, 195

SECTION 11 - SPECIAL OPTIONS/ACCESSORES/KITS

3910408.....258, 264, 276
3910606....388, 391, 403, 407, 411, 663, 665
3910608.....363, 365
3910610.....631, 633
3910804 95, 99, 103, 107, 111, 115, 119, 123, 127, 131, 135, 139, 143, 147, 151, 155
3930606.....437, 441
3930820.....438, 441, 442
3930824.....437, 441
3931016....387, 391, 395, 399, 403, 407, 411
3931408.....501
3931424.....205
3931432....258, 264, 270, 276, 437, 441
3931436.....437, 441
3931512....258, 264, 270, 276
3931628.....258, 264
3931640.....314, 320
3952020.....53
3960389....173, 177, 181, 186, 190, 194, 211, 213
3960407.....222, 226
3960422....388, 391, 403, 407, 411, 631, 633, 663, 665
3960438.....174, 178, 182
3960453.....173
3960462.....174, 178, 182
3960464.....174, 178, 182
3960468....222, 226, 249, 251, 253, 255
3960469....222, 226, 249, 251, 253, 255, 309, 311
3960470.....173, 177, 181
3960526.....23
3980007.....213, 237, 306
3990010.....735, 818
4010303.....438, 442
4010608.....509, 512
4010618....449, 455, 457, 461, 467, 471
4031505.....499
4031516.....503
4031608.....377
4031711.....314, 320
4031914....258, 264, 270, 276
4032014.....258, 264
4032015....379, 387, 395, 404
4060092.....633
4060802....367, 369, 373, 377, 379, 383, 387, 391, 395, 399, 403, 407, 411
4060805....222, 226, 258, 264, 270, 276, 316, 322, 437, 441
4070410.....173, 177, 181
4070411.....173, 177, 181
4070412.....173, 177, 181
4070450.....43
4070560..... 43
4070561..... 43
4070585..... 367
4070863..... 419
4070864..... 419
4070878..... 15, 17
4070879..... 15, 17
4070897..... 419, 421
4070898..... 419, 421
4070929..... 421
4070967..... 421
4070968..... 421
4070969..... 429
4070991 95, 99, 103, 107, 111, 115, 119, 123, 127, 131, 135, 139, 143, 147, 151, 155
4071007..... 421
4071059..... 21
4071122..... 302, 306
4100062..... 608, 612
4120035..... 741
4160139.... 173, 177, 181
4160143.... 173, 177, 181
4160194.... 186, 190, 194
4240018... 369, 377, 379, 383, 387, 391, 395, 399, 403, 407, 663, 665
4240032... 169, 171, 608, 612
4240033... 169, 171, 233, 237, 245, 437, 441, 499, 501, 503, 673, 675, 677, 679
4240099... 241, 258, 264, 270, 276, 299, 303, 306, 314, 320, 373, 512, 517, 519, 537, 539, 541, 543, 667
4240113... 65, 67, 69, 71, 73, 75
4240149..... 527, 529
4280296..... 37
4300157... 379, 388, 395, 404
4340706..... 421
4340747..... 203
4360057... 537, 539, 541, 543, 820
4360070... 387, 392, 396, 400, 404, 408, 412, 818
4360274.... 135, 139, 820
4360328..... 497, 820
4360331.... 475, 477, 820
4360336... 302, 306, 367, 369, 373, 377, 379, 383, 387, 391, 395, 399, 403, 407, 411, 820
4360387... 111, 115, 135, 139, 479, 483, 537, 539, 541, 543, 820
4360407.... 479, 483, 818
4360436... 65, 67, 69, 71, 73, 75, 77, 79, 81, 820
4360469 95, 99, 103, 107, 111, 115, 119, 123, 127, 131, 135, 139, 143, 147, 151, 155, 820
4360475 95, 99, 103, 107, 111, 115, 119, 123, 127, 131, 135, 139, 143, 147, 151, 155, 479, 483, 820
4360476 95, 99, 103, 107, 111, 115, 119, 123, 127, 131, 135, 139, 143, 147, 151, 155, 479, 483, 818
4360498.... 437, 441, 820
4360499.... 437, 441, 820
4360517..... 63, 820
4360542... 367, 369, 373, 818
4360578.... 437, 441, 820
4400275..... 35
4400420..... 35
4420014..... 527, 529
4420037... 512, 517, 519, 523
4420038... 65, 67, 69, 71, 73, 75, 77, 79, 81
4420051 39, 41, 772, 776, 780, 784, 788, 792, 796, 800, 804
4420060..... 377
4420062.... 531, 533, 535
4420066..... 527, 529
4420068... 537, 539, 541, 543
4460007..... 479, 483
4460016..... 741
4460019.... 697, 699, 706
4460027.... 367, 369, 373
4460042..... 701, 705
4460043... 299, 697, 701, 706, 719, 721, 725
4460049... 537, 539, 541, 543
4460051..... 631, 633
4460071... 388, 391, 404, 407, 411, 489
4460125..... 633
4460134..... 731
4460142..... 697, 735
4460183..... 741
4460190.... 367, 369, 373
4460205..... 631, 731
4460224.... 383, 479, 483
4460225.... 715, 717, 741
4460226... 479, 483, 489, 491, 494, 685, 697, 699, 709, 741
4460227... 479, 483, 735, 741
4460233..... 633, 733
4460234... 479, 483, 537, 539, 541, 543
4460247..... 701, 706
4460256..... 727
4460259... 555, 697, 709, 735, 741
4460260... 555, 697, 709, 735, 741
4460265.....491, 494
4460267.....741
4460268....699, 715, 717, 765
4460294.....383
4460297.....735
4460312.....697, 709
4460313....697, 699, 709, 735
4460315.....631, 633
4460320.....735
4460321.....373
4460346....388, 391, 403, 407, 411, 631
4460374.....697, 719
4460375.....697
4460418.....735, 741
4460419.....735, 741
4460424....697, 699, 709, 765
4460425....387, 392, 396, 400, 404, 408, 412, 537, 539, 541, 543, 663, 665
4460426 95, 99, 103, 107, 111, 115, 119, 123, 127, 131, 135, 139, 143, 147, 151, 155, 387, 392, 396, 400, 404, 408, 412
4460428.....203, 479, 483
4460434.....735, 741
4460457....697, 699, 709, 719, 727
4460458....697, 699, 701, 705, 709, 719, 721, 725, 727
4460460.....697, 699, 709
4460464....489, 555, 669, 681, 697, 699, 709, 711, 735, 739, 741, 759, 761, 767
4460465....555, 669, 673, 675, 677, 679, 681, 683, 697, 699, 701, 702, 705, 706, 709, 715, 717, 721, 723, 725, 727, 729, 735, 739, 741, 761, 763, 765, 767
4460466....499, 555, 669, 681, 683, 699, 701, 705, 706, 735, 739, 741, 755, 759, 761, 763, 765
4460467.....825
4460470 95, 99, 103, 107, 111, 115, 119, 123, 127, 131, 135, 139, 143, 147, 151, 155, 479, 483
4460471 95, 99, 103, 107, 111, 115, 119, 123, 127, 131, 135, 139, 143, 147, 151, 155, 479, 483
4460473.....681, 683

4460488 95, 99, 103, 107, 111, 115, 119, 123, 127, 131, 135, 139, 143, 147, 151, 155, 169, 171
4460496 95, 99, 103, 107, 111, 115, 119, 123, 127, 131, 135, 139, 143, 147, 151, 155
4460497 95, 99, 103, 107, 111, 115, 119, 123, 127, 131, 135, 139, 143, 147, 151, 155
4460508 ... 499, 681, 735, 741
4460509 ..... 681, 683
4460510 825
4460518 ... 669, 673, 675, 677, 679, 763
4460526 95, 99, 103, 107, 111, 115, 119, 123, 127, 131, 135, 139, 143, 147, 151, 155
4460536 ... 735, 739, 741, 767
4460539 ... 673, 675, 677, 679, 697, 699, 705, 709, 739, 741, 765, 767
4460612 ..... 663, 665
4460633 ..... 203, 205
4460634 741
4460635 741
4460670 ..... 697, 719
4460701 733
4460703 ..... 701, 706
4460708 .... 479, 483, 741
4460722 299
4460738 ..... 699, 709
4460742 ... 719, 721, 725, 727
4460743 ..... 721, 725
4460746 705
4460748 705
4460761 .... 479, 483, 735
4460806 ... 649, 651, 653, 655, 735, 741
4460807 ..... 715, 717
4460808 ..... 715, 717
4460865 ..... 681, 683
4460866 .... 681, 735, 741
4460868 735
4460871 ... 697, 699, 709, 735, 741, 765, 767
4460872 735
4460873 ..... 735, 741
4460874 ..... 735, 741
4460875 ..... 735, 741
4460876 735
4460877 735
4460878 735
4460879 ..... 555, 741
4460880 ..... 699, 709
4460884 ... 555, 705, 735, 761, 763
4460887 ... 555, 697, 699, 709, 735, 741
4460888 741
4460891 ... 669, 685, 702, 711, 736, 765, 767
4460892 739
4460894 ... 673, 675, 677, 679, 701, 705, 735, 739, 741
4460897 ... 697, 699, 702, 709, 711, 765
4460899 ... 699, 739, 755, 759, 761
4460905 ..... 735, 741
4460910 ..... 753, 763
4460911 ..... 736, 755
4460928 669
4460930 ..... 701, 705
4460931 699
4460932 ... 555, 701, 706, 711
4460933 .... 669, 735, 741
4460941 ..... 711, 755
4460942 ... 499, 701, 705, 711
4460943 .... 735, 741, 755
4460944 ... 673, 675, 677, 679, 697, 699, 701, 705, 709, 735, 741
4460945 ..... 706, 735
4460956 ..... 691, 695
4460957 ..... 691, 695
4460958 665
4460962 .... 512, 519, 635
4460963 ... 404, 408, 412, 635
4460967 ... 721, 723, 725, 727, 729
4460968 .... 377, 437, 441
4460971 ..... 509, 512
4460979 ..... 697, 709
4461005 697
4461006 697
4461008 .... 697, 702, 705
4461052 697
4461053 697
4461054 .... 697, 705, 711
4461060 697
4461070 ..... 669, 697
4461071 ..... 701, 705
4461073 .... 697, 701, 705
4461077 ..... 755, 759
4461095 .... 669, 697, 701
4461157 ..... 697, 709
4461196 743
4461198 ..... 643, 743
4461199 745
4461201 ..... 647, 745
4461205 ..... 747, 749
4461244 ..... 651, 747
4461245 ..... 655, 749
4461246 ..... 659, 751
4461249 751
4462641 387
4520253 29
4520256 33
4530028 ... 512, 517, 519, 521
4567757 ..... 608, 612
4568119 ..... 77, 79, 81
4640261 ..... 39, 41
4640509 .... 563, 565, 567, 569
4640605 ..... 561, 563, 569
4640751 .... 258, 264, 270, 276
4640780 ..... 608, 612
4640858 559
4640866 47
4640932 561
4641022 ..... 77, 79, 81
4641032 577
4641033 575
4641122 ..... 29, 31, 33
4641303 23
4641317 47
4641435 ..... 437, 441
4711000 .... 293, 295, 297, 369, 396, 400, 404, 408, 412
4711400 .. 47, 95, 99, 103, 107, 111, 115, 119, 123, 127, 131, 135, 139, 143, 147, 151, 155, 161, 163, 165, 203, 205, 211, 213, 222, 226, 233, 237, 241, 245, 258, 264, 270, 276, 302, 306, 359, 361, 379, 383, 387, 391, 395, 399, 403, 407, 411, 433, 445, 449, 455, 457, 459, 461, 467, 469, 471, 501, 503, 641, 643, 645, 647, 649, 651, 653, 655, 657, 659, 661, 667, 687, 689
4711500 .... 23, 77, 79, 81, 187, 191, 195, 258, 264, 270, 277, 399, 407, 411, 433, 437, 441
4711600 .. 15, 17, 47, 174, 178, 182, 205, 222, 226, 233, 237, 241, 245, 293, 295, 297, 302, 306, 351, 353, 369, 379, 383, 388, 391, 396, 399, 404, 407, 419, 421, 429, 431, 437, 441, 480, 484, 545, 547, 549, 551, 553, 673, 675, 677, 679
4711700 .... 258, 264, 270, 277, 351, 369, 373
4711800 .... 272, 363, 365, 379, 387, 395, 403, 463, 473
4712000 .... 527, 529, 545, 547, 549, 551, 553
4712200 ..... 527, 529
4740036 43
4740057 53
4740076 ..... 173, 177, 181
4740119 363
4740155 21
4740256 ..... 19, 21
4740274 ... 222, 226, 355, 357
4740362 ..... 475, 477
4740397 95, 99, 103, 107, 111, 115, 119, 123, 127, 131, 135, 139, 143, 147, 151, 155, 367, 377, 479, 483
4740444 ..... 135, 139
4740463 ..... 19, 21
4740472 ..... 15, 17
4740473 ..... 19, 21
4740500 .... 174, 178, 182
4740518 95, 99, 103, 107, 111, 115, 119, 123, 127, 131, 135, 139, 143, 147, 151, 155
4750400 .... 258, 264, 277
4750800 35
4751000 ... 167, 169, 171, 174, 177, 178, 181, 182, 367, 373, 377, 388, 391, 396, 399, 404, 407, 411, 479, 483, 509, 512, 517, 519, 523
4751400 ... 37, 39, 41, 95, 99, 103, 107, 111, 115, 119, 123, 127, 131, 135, 139, 143, 147, 151, 155, 174, 177, 181, 186, 187, 190, 191, 194, 195, 197, 199, 217, 219, 249, 251, 253, 255, 258, 264, 270, 277, 302, 306, 309, 311, 437, 441, 475, 477, 479, 483, 505, 507, 512, 517, 519, 523, 537, 539, 541, 543, 671
4751500 ... 39, 41, 89, 91, 174, 177, 181, 186, 190, 194, 258, 264, 270, 277, 367, 369, 377, 387, 391, 396, 403, 531, 533, 535, 537, 539, 541, 543
4751600 ... 35, 37, 65, 67, 69, 71, 73, 75, 77, 79, 81, 169, 171, 174, 177, 178, 181, 182, 186, 190, 194, 197, 199, 201, 207, 211, 213, 222, 226, 233, 237, 241, 245, 259, 265, 271, 277, 302, 306, 355, 357, 367, 377, 512, 517, 519, 523
4751800 ... 63, 77, 79, 81, 203, 205, 211, 213, 249, 251, 253, 255, 309, 311, 463, 473, 537, 539, 541, 543
4752000 ... 211, 213, 233, 237, 241, 245, 302, 306

4760600.....631, 633
4761000.....174, 178, 181
4761400.....505
4761600.....207, 475, 477
4762000.....43
4770600.....363, 365
4791400....222, 226, 379, 383, 387, 391, 395, 399, 404, 407
4811400....555, 641, 643, 645, 647, 649, 651, 653, 655, 657, 659, 661
4811600.....377
4811700.....96, 100, 104, 108, 112, 116, 120, 124, 128, 132, 136, 140, 144, 148, 152, 156, 169, 171, 314, 320, 327, 373, 411, 449, 455, 457, 461, 467, 471, 509, 512
4811702....259, 265, 271, 277, 325
4811900....259, 265, 271, 277, 302, 306, 314, 320, 325, 327, 427, 671
4811902....260, 266, 271, 277, 314, 320, 327
4812000....234, 238, 245, 259, 265, 271, 277, 302, 306, 314, 320, 327, 365, 373, 427
4812002.....314, 320, 329
4812100....233, 237, 241, 245, 259, 265, 271, 277, 327, 427
4812200....222, 226, 259, 265, 271, 277, 355, 357, 373
4843777.....43
4844817.....423
4844958.....61
4845582.....531, 533, 535
4845680.....431
4846627....512, 517, 519, 523
4846673.....541, 543
4860225.....29, 31
4871700.....412
4891500 95, 99, 103, 107, 111, 115, 119, 123, 127, 131, 135, 139, 143, 147, 151, 155, 271, 373
4891600.....63, 187, 191, 195, 363, 427
4891800.....23, 217, 219, 249, 251, 253, 255, 259, 265, 271, 277, 309, 311, 363, 365, 369, 383, 391, 399, 407
4892000.....23, 59
4892200.....15, 17
4892600001.....427
4921829.....374, 731
4921955.....733
4922218.....673, 675
4922220..... 673, 675
4922576... 673, 675, 677, 679, 683
4922578... 673, 675, 677, 679
4922641... 367, 370, 373, 377, 392, 396, 399, 405, 407, 413
4922666..... 479, 483
4922925... 396, 399, 404, 407, 411, 717
4923379..... 222, 226
4923445..... 374, 719
4933218..... 537, 541
5240800.... 260, 266, 271
5241000..... 314, 320
5241200... 314, 320, 411, 427
5250605..... 325, 327
5250810..... 260, 266
5251008..... 427
5251010..... 271
5251016..... 427
5251210..... 241
5260600..... 325, 327
5272010..... 316, 320
70000017..... 825
70000044..... 229
70000123..... 377
70000342..... 425
70000345 . 230, 281, 285, 291
70000619 . 396, 399, 404, 407, 411
70000797..... 27
70000800..... 230
70000863 . 395, 399, 403, 408, 412
70000912..... 229
70000913..... 229
70000914..... 229
70000915..... 229
70000916..... 229
70000917..... 229
70000918..... 229
70000919..... 229
70001002..... 229
70001100 . 395, 399, 403, 408, 412
70001181..... 230
70001248..... 63
70001384 . 395, 399, 403, 408, 412
70001385..... 395, 403
70001424..... 515
70001425..... 515
70001427..... 515
70001428..... 515
70001429..... 515
70001430..... 515
70001431..... 515, 818
70001432..... 515, 820
70001435..... 229
70001663..... 207
70001696.. 395, 403, 411
70001697..... 425
7000180..... 290
70001835..... 229
70001836..... 229
70001837..... 229
70001841..... 229
70001844..... 230
70001850..... 229
70001866..... 229
70001868..... 229
70001870 . 229, 281, 286, 289
70001871..... 229
70001872..... 230
70001953 .. 395, 403, 412
70001954..... 339
70001955..... 339
70001956..... 339
70001957..... 339
70001966 . 379, 383, 387, 391, 395, 400, 403, 408, 411, 412
70001973 . 395, 400, 403, 408, 412
70001974 . 395, 400, 403, 408, 412
70002013..... 429
70002014..... 429
70002064..... 435
70002066..... 56
70002085..... 56
70002088 .. 395, 403, 412
70002112 . 65, 67, 71, 83, 85
7000213..... 56
7000217..... 56
70002200..... 229
70002234..... 229
7000224..... 25
7000228..... 56
7000229..... 56
70002290..... 395, 403
70002291..... 400, 408
70002297 . 395, 399, 403, 408, 412
7000230..... 56
70002386..... 435, 818
7000239..... 25
7000240..... 25
70002410..... 561, 571
70002415..... 230
70002416..... 230
70002417..... 230
7000246..... 56
70002460 . 395, 400, 403, 408, 411
7000247..... 56
7000248..... 56
7000253..... 56
7000255..... 56
7000257..... 56
70002715..... 77, 79, 81
70002716..... 77, 79, 81
70002718..... 230, 289
70002744..... 573
70002745..... 573
70002748..... 573
70002749..... 573
70002751..... 573
70002814.....83
7000283.....25
70002838.....83, 85
70002839.....83, 85
7000284.....25
70002842.....559
7000289.....25
70002902.....489
70002903.....489
70002904.....489
70002905.....489
70002948.....203, 205
70003019.....49
70003136.....229
70003454.....63
70003464.....229
70003465.....229
70003466.....229
70003472.....229
70003475.....229
70003478.....229
70003631...400, 408, 411
70003708..379, 383, 387, 391, 395, 400, 403, 408, 412
70003709..379, 383, 387, 391, 395, 400, 403, 408, 412
70003784.....479, 483
70003935.....23
70003936.....23
70003989.....93
70003992.....93
70003993.....93
70004020...222, 226, 818
70004037.....56
70004040.....56
70004041.....56
70004042.....56
70004043.....56
70004044.....56
70004045.....56
70004047.....56
70004050.....49
70004051.....49
70004052.....49
70004055.....49
70004056.....229
70004058.....229, 818
70004060.....229
70004092..379, 383, 387, 391, 400, 408
70004094.....400, 408
70004098..387, 392, 400, 408
70004099..383, 391, 400, 408
70004125.....93
70004149.....77, 79, 81
70004151.....435
70004169...395, 403, 412
70004171...379, 387, 412
70004183.....335
70004184.....69, 73, 75
70004186.....565
70004199.....83, 85
70004237.....561, 571

70004272 229
70004276 .. 282, 285, 291
70004277 .. 282, 286, 291
70004279 281
70004280 ..... 230, 289
70004282 291
70004287 229
70004289 230
70004329 337
70004331 337
70004332 337
70004333 337
70004336 337
70004337 337
70004338 337
70004340 337
70004342 337
70004343 337
70004344 337
70004345 337
70004346 337
70004347 337
70004348 337
70004349 337
70004350 337
70004351 337
70004352 337
70004381 573
70004382 573
70004457 49
70004459 49
70004460 ..... 49, 818
70004461 ..... 49, 50
70004463 ..... 49, 818
70004501 290
70004504 ..... 282, 285
70004505 ..... 281, 289
70004506 ..... 281, 289
70004507 ..... 281, 289
70004508 .. 281, 285, 289
70004509 ..... 281, 289
70004510 ..... 281, 289
70004511 290
70004513 290
70004584 49
70004594 49
70004595 ..... 49, 818
70004596 49
70004597 49
70004598 49
70004653 ..... 49, 818
70004657 49
70004665 49
70004667 49
70004676 . 379, 383, 387, 391
70004677 379
70004678 . 379, 383, 387, 391
70004679 . 379, 383, 387, 391
70004680 . 379, 383, 387, 391
70004681 ..... 379, 383
70004682 . 379, 383, 387, 392
70004683 ..... 379, 383
70004684 387
70004685 ..... 387, 392
70004686 383
70004687 391
70004738 491
70004739 491
70004740 491
70004741 491
70004742 491
70004743 491
70004744 491
70004745 491
70004746 491
70004747 491
70004748 491
70004749 491
70004750 491
70004751 491
70004752 493
70004753 493
70004754 493
70004755 493
70004756 493
70004757 493
70004758 493
70004759 493
70004760 493
70004761 493
70004762 493
70004763 493
70004764 493
70004765 493
70004766 493
70004767 493
70004768 493
70004769 493
70004770 493
70004771 493
70004772 493
70004773 493
70004774 494
70004775 494
70004795 ..... 83, 85
70005008 .. 316, 321, 819
70005171 281
70005172 .. 281, 285, 289
70005173 ..... 281, 289
70005176 281
70005177 ..... 281, 290
70005181 290
70005184 .. 282, 285, 290
70005188 290
70005189 290
70005191 ..... 282, 291
70005194 49
70005195 49
70005196 49
70005197 49
70005198 49
70005199 50
70005200 50
70005201 50
70005202 50
70005203 56
70005458 337
70005459 337
70005460 337
70005461 337
70005462 337
70005463 337
70005464 337
70005465 337
70005527 ..... 282, 291
70005594 577
70005647 ..... 282, 291
70005648 ... 282, 291, 819
70005663 825
70005708 ..... 83, 818
70005916 230
70005917 230
70005920 ..... 281, 289
70005922 289
70005923 290
70005924 290
70005926 290
70005928 290
70005929 ..... 282, 290
70005931 ... 282, 285, 290
70005932 291
70005933 291
70005934 291
70005938 ..... 286, 289
70005941 ..... 281, 285
70005942 ... 281, 285, 289
70006093 ..... 399, 408
70006094 ..... 400, 408
70006095 .. 400, 403, 408, 818
70006096 ..... 400, 408
70006097 ..... 400, 408
70006134 325
70006135 325
70006136 325
70006144 ... 281, 285, 289
70006145 331
70006147 331
70006150 331
70006151 331
70006152 331
70006153 331
70006154 331
70006155 ..... 331, 819
70006157 331
70006158 331
70006159 331
70006160 331
70006161 331
70006162 331
70006163 331
70006164 331
70006165 331
70006166 331
70006167 331
70006168 331
70006169 331
70006170 331
70006171 ..... 331, 819
70006172 ..... 331, 819
70006173 331
70006174 331
70006175 ..... 331, 819
70006176 ..... 331, 819
70006177 331
70006178 331
70006179 331
70006180 331
70006181 331
70006182 331
70006183 331
70006184 331
70006185 331
70006186 331
70006187 331
70006188 331
70006189 331
70006191 331
70006194 331
70006195 331
70006196 332
70006197 332
70006198 332
70006199 332
70006200 332
70006202 332
70006203 332
70006205 332
70006206 332
70006207 332
70006208 332
70006213 ..... 332, 819
70006215 332
70006217 332
70006219 332
70006221 332
70006225 332
70006232 332
70006233 331
70006235 332
70006236 332
70006264 289
70006265 289
70006266 289
70006294 282
70006304 56
70006344 577
70006403 353
70006404 353
70006405 353
70006406 353
70006407 353
70006408 353
70006409 353
70006410 353
70006460 .. 316, 321, 819
70006461 ..... 316, 321
70006479 577
70006480 577
70006552 . 379, 383, 387, 392
70006553 . 379, 383, 387, 392, 819
70006649 565
70006650 565
70006652 ..... 282, 291
70006653 ..... 282, 291
70006673 25
70006674 25
70006675 25
70006676 25
70006677 25
70006678 25

70006680.....25
70006684.....25
70006685.....25
70006690.....25
70006691.....25
70006692.....25
70006728.....577
70006731.....577
70006733.....577
70006734.....565
70006735.....565
70006736.....565
70006799.....575
70006802.....575
70006832.....25
70006833.....25
70006921.....577
70006922.....577
70006923.....577
70006924.....577
70006925.....577
70006926.....577
70006927.....577
70006928.....577
70006941.....289
7000695.....230
70006955.....49
70006956.....49, 818
70006957.....49
70006961.....49
70007108.....332
70007157.....561, 571
70007159.....561, 571
70007161.....561, 571
70007246.....563, 567
70007277.....569
70007278...563, 567, 569
70007279.....569
70007280.....569
70007282...563, 567, 569
70007283.....569
70007325.....282
70007326.....281
70007331.....282
70007354.....281
70007355.....282
70007419.....569
70007420.....569
70007421.....567
70007422.....563, 567
70007423.....563, 567
70007424.....567
70007425.....567
70007426.....567
70007427.....563
70007428.....563
70007429.....563
70007430.....563
70007446.....435
70007489.....282
70007508.....65, 67, 71
70007514.....575
70007515.....575
70007516.....575
70007517.....575
70007518.....575
70007519.....575
70007520..... 575
70007521..... 575
70007522..... 575
70007523..... 561
70007524..... 561, 571
70007525..... 571
70007603..... 285
70007725..... 85
70007726..... 85
70007727..... 85
70009020..... 303, 307
7001928..... 25
70022564 . 561, 563, 567, 569, 571
70023369..... 561, 571
70023370..... 565
70023371..... 565
70023380..... 563, 567
70023592 . 259, 265, 271, 819
70023593 . 259, 265, 271, 819
70023859..... 49
70023860..... 49
70023862..... 49
70024441..... 85
70024484..... 291
70024488..... 289
70024494 .. 281, 285, 289
70024502..... 290
70024504..... 285
70024507 .. 282, 285, 291
70024509..... 282, 291
70024513 .. 281, 285, 289
70024517..... 281, 289
70024904 .. 281, 286, 289
70024905..... 281, 289
70024906..... 281, 289
70024912..... 282
70024915..... 282, 291
70024916..... 285
70024917..... 282, 291
70024918..... 291
70024920 .. 282, 290, 291
70024922 .. 282, 285, 291
70024924..... 281, 289
70024925 .. 281, 285, 289
70024961 .. 281, 285, 289
70025077..... 291
70025082 .. 229, 230, 289
70025084..... 290
70025101..... 290
70025107..... 290
70025109..... 290
70025111..... 281, 289
70025112..... 290
70025115..... 290
70025120..... 282, 291
70025124..... 290
70025130..... 285, 291
70025132..... 291
70025133..... 290
70025135..... 281, 289
70025139..... 289
70025140..... 281, 289
70025142 .. 282, 285, 290
70025144..... 281, 289
70025145..... 281, 289
70025146..... 281, 289
70025148..... 290
70025151..... 282, 290
70025152..... 281, 289
70025153 . 281, 285, 818, 819
70025154..... 281, 289
70025155..... 290
70025158..... 290
70025160..... 285
70025161 . 282, 285, 818, 819
70025164 .. 281, 285, 291
70025175..... 290
70025179 .. 281, 290, 291
70025180..... 290
70025181 .. 281, 285, 289
70025182..... 282, 290
70025183..... 282, 290
70025184..... 282, 290
70025185..... 290
70025192..... 291
70025200..... 282, 290
70025203..... 290
70025205..... 281
70025210 .. 282, 290, 819
70025212..... 282, 291
70025231..... 281, 291
70025233..... 291
70025235..... 282, 290
70025239..... 281, 290
70025240..... 290
70025242..... 282
70025477..... 291
70025660..... 289
70025733..... 291
70025752..... 230
70025753..... 230
70025788..... 282
70026210..... 282, 291
70026287 .. 563, 567, 569
70026995..... 291
70027259..... 575
70027750..... 569
70028185..... 289
7002821..... 825
7002822..... 825
7002823..... 825
7002826..... 825
7002840..... 825
70028538 .. 282, 290, 291
70028540..... 282
70028802..... 290
70029433..... 282
70029451..... 282
70029468..... 569
70029512..... 285
70029517..... 282
70029520..... 282
70029557..... 281
70029797..... 282, 285
70030359..... 286
7004275..... 825
7004276..... 825
7004906..... 337
7004907..... 337
7004908.....337
7007415.....339, 340
7007437.....27
7007438.....27
7007439.....27
7007446.....27
7007633.....56
7010492.....56
7010543.....47
7011112.....561
7011333.....437, 441
7011342.....437, 441
70124410.....230
70124440.....230
7012513....367, 369, 373, 377
7012514....367, 369, 373, 377
7012558.....367, 369, 373
7012773.....49
7012914.....435
7012918.....435
7012941.....47
7012944.....47, 818
7012953.....433, 435
7012959.....47
7012965.....435
7012967.....435
7012970.....433
7012989.....435
7012998.....435
7016314.....69, 73, 75
7016319.....167
7016328.....229, 818
7016331....229, 281, 285, 289, 818, 819
7016372.....167
7016652.....825
7016654.....825
7016655.....825
7017023.....56
7017028.....25, 56
7017047.....25
7017070.....56
7017072.....56
7017080.....56
7017082.....25
7017085.....56
7017142.....425
7017159.....425
7017162.....425
7017163.....425
7017164.....425
7017172.....425
7017192.....425
7017195.....425
7017402.....435
7017452.....435
7017466.....47
7018942.....50
7018951.....50
7018991.....49, 818
7018992.....49
7019680.....367, 369, 373
7020064.....431
7020065.....431
7020066.....431

7020067 431
7020108 ... 367, 369, 373, 377
7020109 ... 367, 369, 373, 377
7020110 ... 367, 369, 373, 377
7020111 ... 367, 369, 373, 377
7020175 95, 99, 103, 107, 111, 115, 119, 123, 127, 131, 135, 139, 143, 147, 151, 155, 479, 483
7020176 95, 99, 103, 107, 111, 115, 119, 123, 127, 131, 135, 139, 143, 147, 151, 155, 479, 483, 818
7020190 ... 367, 369, 373, 377
7020403 229
7020408 229
7020465 ... 229, 281, 285, 289
7020468 229
7020471 230
7020479 229
7020492 290
7021249 27
7021275 ..... 27, 340
7021276 27
7021277 27
7021375 ..... 49, 50
7021625 23
7021639 23
7021653 435
7022162 331
7022302 27
7022305 27
7022310 27
7022311 ..... 27, 340
7022312 27
7022314 ..... 27, 340
7022318 339
7022326 27
7022328 27
7022368 27
7022371 27
7022372 27
7022397 23
7022399 23
7023907 27
7023908 27
7023910 27
7023911 435
7023917 23
7023933 23
7023947 339
7023948 339
7023949 339
7023950 339
7023951 339
7023952 339
7023956 339
7023957 339
7023958 339
7023960 339
7023961 339
7023962 339
7023964 ..... 339, 340
7023965 339
7023966 340
7023967 340
7024021 49
7024100 56
7024149 25
7024151 25
7024154 25
7024190 25
7024191 25
7024397 577
7024404 63
7024441 83
7024462 521
7024463 521
7024467 521
7024469 ..... 521, 820
7024470 521
7024471 ..... 515, 521
7024472 521
7024473 521
7024474 521
7024475 521
7024478 521
7024484 ..... 395, 403
7024485 ... 395, 403, 411, 818
7024488 ... 396, 399, 404, 407, 411
7024489 ... 396, 399, 404, 407, 411
7024508 575
7024530 515
7024531 515
7024532 515
7024533 515
7024534 515
7024535 515
7024536 515
7024537 515
7024561 ..... 395, 403
7024579 .... 230, 281, 289
7024598 ..... 363, 365
7024704 56
7024762 56
7024763 56
7024782 25
7024784 56
7024854 27
7024864 340
7024866 340
7024867 339
7024868 ..... 27, 339
7024881 23
7026188 .... 395, 403, 411
7026197 63
7026199 .... 367, 369, 373
7026503 63
7026504 63
7026505 63
7026506 63
7026507 63
7026509 63
7026597 .... 395, 400, 403, 408, 411
7026626 .... 395, 400, 403, 408, 412
7026632 207
7026633 207
7026634 207
7026635 207
7026636 207
7026637 207
7026638 ..... 207, 820
7026639 207
7026640 207
7026641 208
7026642 208
7026643 208
7026644 208
7026645 208
7026646 208
7026647 208
7026648 208
7026649 208
7026650 208
7026651 207
7026652 207
7026653 207
7026654 207
7026655 207
7026656 207
7026658 208
7026659 207
7026660 207
7026661 207
7027053 ..... 211, 213
7027084 .... 233, 237, 241, 246, 302, 307
7027085 .... 233, 237, 241, 246, 302, 307
7027086 .... 233, 238, 241, 246, 302, 307
7027087 .... 233, 238, 241, 246
7027088 .... 233, 238, 241, 246, 302, 307
7027092 ..... 211, 213
7027093 ..... 211, 213
7027094 ..... 211, 213
7027095 ..... 211, 213
7027236 229
7027276 229
7027404 332
7027773 521
7027774 521
7027775 521
7027776 521
7027777 521
7027778 521
7027779 521
7027780 521
7027781 ..... 203, 205
7027782 ..... 203, 205
7027783 ..... 203, 205
7027784 ..... 203, 205
7027790 229
7027791 229
7027792 229
7027795 ..... 230, 818
7027796 230
7027799 ... 395, 400, 403, 408, 411
7027887 ... 367, 369, 373, 377
77143013 ..... 95, 99, 103, 107, 111, 115, 119, 123, 127, 131, 135, 139, 143, 147, 151, 155
77363233 ..... 715, 717
80344004 25
80484084 ..... 701, 705
80934561 63
80983191 .. 701, 706, 819
8220051 711
8220115 701
8220164 706
8229242 ... 701, 706, 735, 818, 819
8229249 .... 555, 741, 819
8270147 ... 211, 213, 233, 237, 241, 246, 302, 307
8273291 ..... 316, 321
8305401 ..... 314, 320
8307109 ..... 314, 320
8310070 .... 186, 190, 194
8310129 ..... 527, 529
8310548 ..... 314, 320
83304173 ..... 83, 85
8405006 ... 233, 237, 241, 245, 293, 295, 297, 314, 320, 353
8405007 ... 259, 265, 271, 277
8405009 ... 259, 265, 271, 277, 314, 321
8405102 ..... 314, 321
8405104 ... 259, 265, 271, 277, 314, 321
8405203 ..... 314, 321
8405204 271
8406102 ... 234, 238, 241, 245, 259, 265, 277
8406109 ... 259, 265, 271, 277, 315, 321
8406110 ... 259, 265, 271, 277
8406201 ... 205, 303, 307, 316, 322
8410001 ..... 315, 321
8410009 ..... 316, 322
8410011 ... 259, 265, 271, 277, 315, 321
8410013 ... 233, 237, 241, 245, 259, 265, 271, 277
85031405 272
8580420 37
85941018 ..... 302, 306
8770050 ... 585, 591, 597, 603
88261024 433
88261039 178
88411013 671
88521008 ..... 437, 441
88521205 ..... 89, 91
88521214 . 545, 547, 549, 551, 553

88662523...186, 190, 194
8896941.....825
91143177..... 608, 612
91164079..... 435
91203039 .. 427, 437, 441
91401281 89
91403102.. 259, 266, 271, 278, 818, 819

Corporate Office
JLG Industries, Inc.
1 JLG Drive
McConnellsburg, PA 17233-9533 USA

(717) 485-5161 (Corporate)
(877) 554-5438 (Customer Support)
(717) 485-6417

Visit our website for JLG Worldwide Locations.
www.jlg.com

OSHKOSH™