Illustrated Parts Manual

Models
2733
12010

PVC
2311

P/N
31222453

April 8, 2024 - Rev B

An Oshkosh Corporation Company

REVISION LOG

November 1, 2023 - A - Original Issue of Manual (Edited to B/M 1001266000 Revision S)
April 8, 2024 - B - Revised Manual (Edited to B/M 1001266000 Revision T)

Machine Configuration

Two configurations of each machine are included in this manual. Determine if machine is equipped with Ultra Sulfer Fuel Decal (1) as indicated below.

- **If equipped with the Ultra Low Sulfur decal, all specific references to this machine configuration will be referred to as Ultra Low Sulfur (ULS) from this point forward.**
- **If not equipped with the Ultra Low Sulfur decal, all specific references to this machine configuration will be referred to as Low Sulfur (LS) from this point forward.**

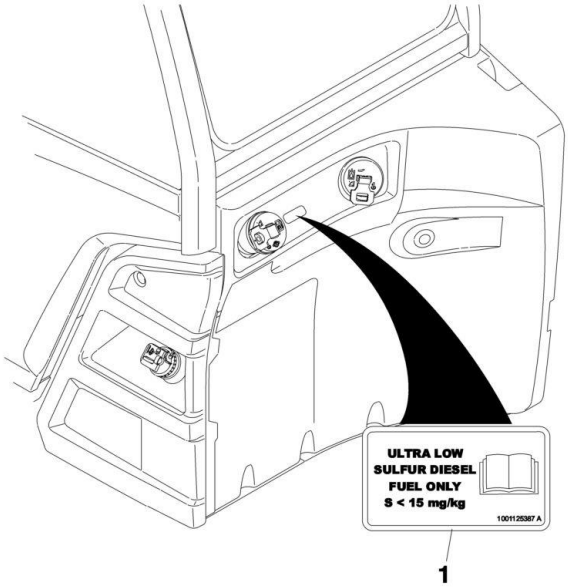

GENERAL INFORMATION

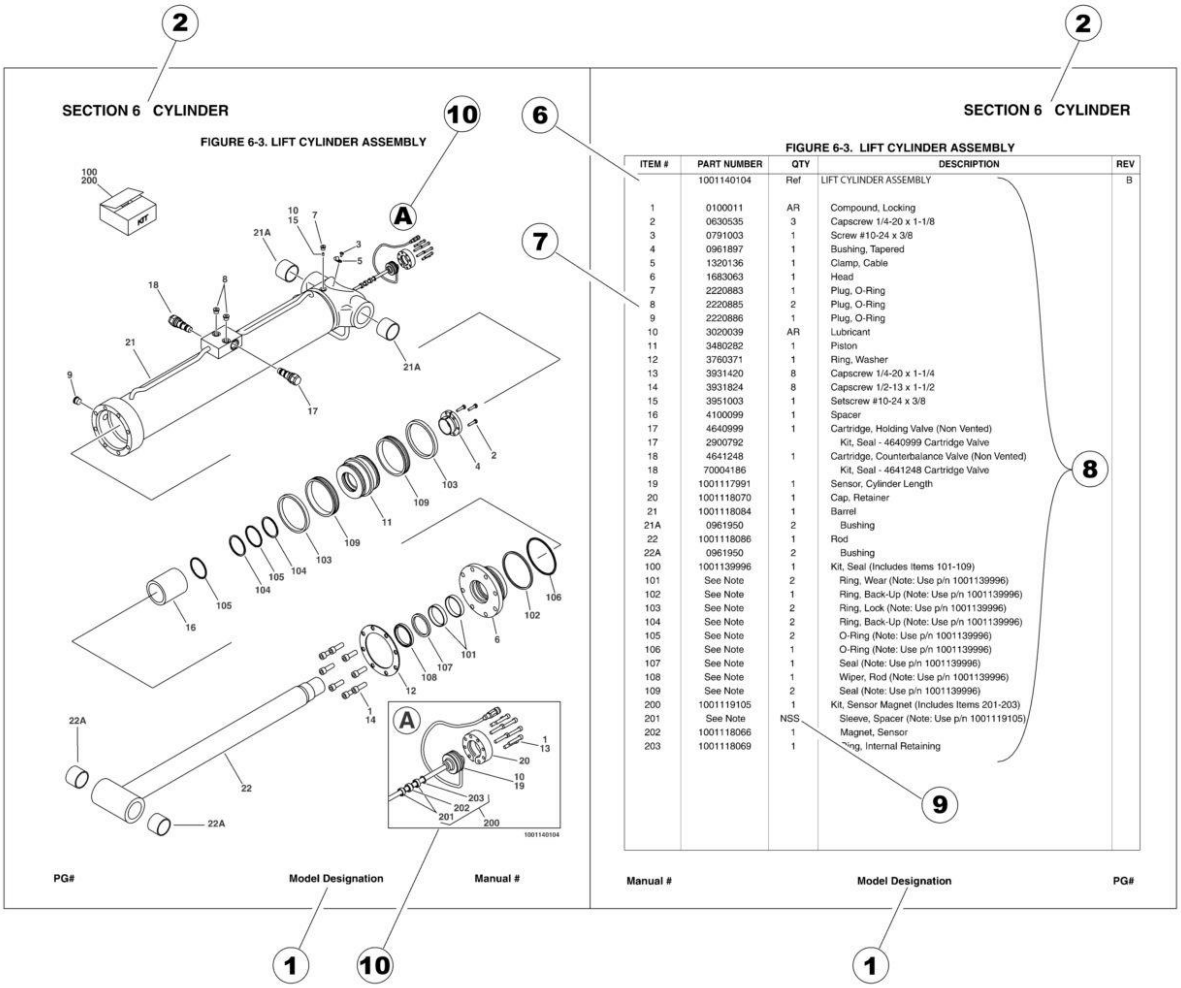

ITEM #	PART NUMBER	QTY	DESCRIPTION	REV
	1001140104	Ref	LIFT CYLINDER ASSEMBLY	B
1	0100011	AR	Compound, Locking	
2	0630535	3	Capscrew 1/4-20 x 1-1/8	
3	0791003	1	Screw #10-24 x 3/8	
4	0961897	1	Bushing, Tapered	
5	1320136	1	Clamp, Cable	
6	1683063	1	Head	
7	2220883	1	Plug, O-Ring	
8	2220885	2	Plug, O-Ring	
9	2220886	1	Plug, O-Ring	
10	3020039	AR	Lubricant	
11	3480282	1	Piston	
12	3760371	1	Ring, Washer	
13	3931420	8	Capscrew 1/4-20 x 1-1/4	
14	3931824	8	Capscrew 1/2-13 x 1-1/2	
15	3951003	1	Setscrew #10-24 x 3/8	
16	4100099	1	Spacer	
17	4640999	1	Cartridge, Holding Valve (Non Vented)	
17	2900792		Kit, Seal - 4640999 Cartridge Valve	
18	4641248	1	Cartridge, Counterbalance Valve (Non Vented)	
18	70004186		Kit, Seal - 4641248 Cartridge Valve	
19	1001117991	1	Sensor, Cylinder Length	
20	1001118070	1	Cap, Retainer	
21	1001118084	1	Barrel	
21A	0961950	2	Bushing	
22	1001118086	1	Rod	
22A	0961950	2	Bushing	
100	1001139996	1	Kit, Seal (Includes Items 101-109)	
101	See Note	2	Ring, Wear (Note: Use p/n 1001139996)	
102	See Note	1	Ring, Back-Up (Note: Use p/n 1001139996)	
103	See Note	2	Ring, Lock (Note: Use p/n 1001139996)	
104	See Note	2	Ring, Back-Up (Note: Use p/n 1001139996)	
105	See Note	2	O-Ring (Note: Use p/n 1001139996)	
106	See Note	1	O-Ring (Note: Use p/n 1001139996)	
107	See Note	1	Seal (Note: Use p/n 1001139996)	
108	See Note	1	Wiper, Rod (Note: Use p/n 1001139996)	
109	See Note	2	Seal (Note: Use p/n 1001139996)	
200	1001119105	1	Kit, Sensor Magnet (Includes Items 201-203)	
201	See Note	NSS	Sieeve, Spacer (Note: Use p/n 1001119105)	
202	1001118066	1	Magnet, Sensor	
203	1001118069	1	Ring, Internal Retaining	

Manual # Model Designation PG#

1) MACHINE IDENTIFICATION
Machines are identified by model and in some cases a combination of models, serial number (SN) or regional standard (i.e ANSI, CE,CSA). Components may also be identified by SN or manufacturer. Common components that may be identified by these characteristics are engines and hydraulic components.

2) PARTS MANUAL ORGANIZATION
Product information in this manual is organized under section titles. Frame, Cylinder, Hydraulic and Electrical are a few examples. Each section is organized by figure and page number. The information within the Figure is then organized by item number, part number, description and corresponding illustration (s).

3) TABLE OF CONTENTS (NOT SHOWN)
A table of contents is found toward the beginning of the manual. Figure number, description and page number are provided for quick reference to the page containing the related information.

4) RECOMMENDED SPARE PARTS (NOT SHOWN)
The Recommended Spare Parts List, located near the end of the manual, reference most frequently used maintenance parts.

5) PART NUMBER INDEX (NOT SHOWN)
A numerical index listing all part numbers and the corresponding page number(s) appears at the back of the manual.

GENERAL INFORMATION

6) NON-SERVICED PARTS

In some instances, it is necessary to display non-serviced parts, assemblies or installations. In the case of assemblies and installations there will be a Ref in the Qty. column. In case of parts that are not available for service within assemblies or components, there will be a NSS (Not Sold Separately) or NLA (No Longer Available) listed in the Qty. column of the manual.

7) PARTS LIST ITEM NUMBERS

Numbers shown in the item# column correspond to numbers used in the associated illustration (s). Item numbers which are missing from the sequence in the parts list are not used on that page.

8) INDENTED PARTS DESCRIPTION

An indented part description is included in the item under which it is indented.

9) ABBREVIATION AND SYMBOLS

AC..... Alternating Current
ADE.....Advanced Design Electronics
AG.....Agricultural
ANSI.....American National Standards Institute
AR.....As Required
ASSY..... Assembly
AUS.....Australia
AUX.....Auxiliary
AWG.....American Wire Gauge
B/M.....Bill of Material
CAC.....Charge Air Cooler
CE.....European Conformity
CCW.....Counter Clockwise
CM.....Centimeter
CW.....Clockwise
CSA.....Canadian Standards Association
CYL.....Cylinder
DIA.....Diameter
DC.....Direct Current
DEF.....Diesel Exhaust Fliud
EMS..... Emergency Stop
ENG.....Engine
FT(ft) .....Feet
GA(Ga).....Gauge
HRC.....High Rated Countries
HVAC.....Heating, Ventilating, and Air Conditioning
HYD.....Hydraulic
Hz.....Hertz
ID.....Inside Diameter
IN.....inches
ISO.....International Organization for Standards
JIC.....Joint Industry Council
KG.....Kilogram
L.....Liter
LB(LBS).....Pounds
LCD..... Liquid Crystal Display
LED..... .Light Emitting Diodes
LH.....Left Hand
LRC.....Low Rated Countries
LSS.....Load Sensing System
M(m).....Metric/Meter
MM(mm).....Milimeter
mA.....Miliamps
NLA.....No Longer Available
NPT..... National Pipe Threads
NSS.....Not Sold Separately
OD.....Outside Diameter
ORB..... O-Ring Boss
ORFS.....O-Ring Face Seal
OZ (oz).....Ounces
PG.....Page
PN.....Part Number
QT(qt.). .....Quarts
QTY.....Quantity
REF.....Reference
REV.....Revision Level
RH.....Right Hand
SAE.....Society of Automotive Engineers
SN..... ..Serial Number
SPEC(S).....Specifications
T/T.....Turntable
UGM.....Universal Ground Module
V.....Volts
W.....Watts
#.....Number

10) ILLUSTRATION REFERANCE LETTERS

When necessary, illustrations may contain reference letters that are intended to track information (i. e. hoses, harnesses) from one point to another or to track visual enlargement of components to show details that may be located in another area on the illustration.

Note: Due to continuous product improvements, JLG Industries, Inc. reserves the right to make specification changes without prior notification. Contact JLG Industries, Inc. for updated information.

TABLE OF CONTENTS

SECTION 1 - FRAME AND ATTACHING PARTS 17

FIGURE 1-1. HITCHPIN INSTALLATION 18
FIGURE 1-2. ENGINE ENCLOSURE INSTALLATION 20
FIGURE 1-3. ENCLOSURE SKIRT INSTALLATION 22
FIGURE 1-4. HOOD INSTALLATION 24
FIGURE 1-5. CLOSURE INSTALLATION (2733) 26
FIGURE 1-6. CLOSURE INSTALLATION (12010) 28
FIGURE 1-7. FRAME COVER INSTALLATION 30
FIGURE 1-8. HYDRAULIC TANK INSTALLATION 32
FIGURE 1-9. HYDRAULIC TANK ASSEMBLY 34
FIGURE 1-10. FUEL TANK INSTALLATION 36
FIGURE 1-11. FUEL TANK ASSEMBLY 38
FIGURE 1-12. REMOTE FILL INSTALLATION 40
FIGURE 1-13. WHEEL CHOCK INSTALLATION 42
FIGURE 1-14. PAD LOCK 44
FIGURE 1-15. BOOM PROP INSTALLATION 46
FIGURE 1-16. GROMMETS INSTALLATION 48
FIGURE 1-17. MIRROR INSTALLATION 50
FIGURE 1-18. RIGHT SIDE CAMERA INSTALLATION 52

SECTION 2 - BOOM 55

FIGURE 2-1. BOOM INSTALLATION 56
FIGURE 2-2. BOOM ASSEMBLY 58
FIGURE 2-3. BASE BOOM SECTION ASSEMBLY 60
FIGURE 2-4. FLY BOOM SECTION ASSEMBLY 62
FIGURE 2-5. ATTACH COUPLER INSTALLATION (MANUAL) 64
FIGURE 2-6. ATTACH COUPLER INSTALLATION (HYDRAULIC) 66
FIGURE 2-7. QUICK COUPLER INSTALLATION 68
FIGURE 2-8. MANUAL COUPLER PIN HOLDER INSTALLATION 70
FIGURE 2-9. BOOM ANGLE INDICATOR INSTALLATION 72
FIGURE 2-10. BOOM BRUSHES INSTALLATION 74

SECTION 3 - ATTACHMENTS 77

FIGURE 3-1. PLATFORM DOCKING STATION KIT 78
FIGURE 3-2. CARRIAGE ASSEMBLY (60 INCH) 80
FIGURE 3-3. CARRIAGE ASSEMBLY (72 INCH) 82
FIGURE 3-4. CARRIAGE ASSEMBLY (87 INCH) 84
FIGURE 3-5. DUAL FORK POSITIONING SIDE SHIFT CARRIAGE 86
FIGURE 3-6. DUAL FORK POSITIONING CARRIAGE, (72IN/1829MM) 88
FIGURE 3-7. FORK - PALLET (2.75X7.87X48) 90
FIGURE 3-8. FORK - PALLET (2.75X7.87X60) 92
FIGURE 3-9. FORK - PALLET (2.75X7.87X72) 94
FIGURE 3-10. FORK - PALLET (2.75X7.87X96) 96
FIGURE 3-11. FORK MOUNTED PLATFORM (ANSI) 98
FIGURE 3-12. FORK MOUNTED PLATFORM (CSA) 100

TABLE OF CONTENTS

FIGURE 3-13. FORK MOUNTED PLATFORM (ISO) 102
FIGURE 3-14. PLATFORM SIDE ENTRY 104
FIGURE 3-15. BUCKET, GENERAL PURPOSE (94", 3.9YD3) 106
FIGURE 3-16. BUCKET, LIGHT MATERIAL (102", 6.5YD3) 108
FIGURE 3-17. GRAPPLE BUCKET (2.4 M X 3.0M³) 110
FIGURE 3-18. LIFTING HOOK (30K) 112
FIGURE 3-19. TRUSS BOOM 114
FIGURE 3-20. HYDRAULIC WINCH INSTALLATION (12 TON) 116
FIGURE 3-21. PIPE GRAPPLE INSTALLATION 118
FIGURE 3-22. TIRE HANDLER INSTALLATION (2500KG) 120
FIGURE 3-23. LOG CLAMP INSTALLATION 122
FIGURE 3-24. STEEL COIL HANDLER 124
FIGURE 3-25. TIRE HANDLER INSTALLATION (6800KG) 126

SECTION 4 - ENGINE AND ATTACHING PARTS 129

FIGURE 4-1. ENGINE MOUNT INSTALLATION 130
FIGURE 4-2. CUMMINS ENGINE, QSB 4.5L (2733) 132
FIGURE 4-3. CUMMINS ENGINE, QSB 4.5L (12010) 134
FIGURE 4-4. AIR CLEANER LINES INSTALLATION (2733) 136
FIGURE 4-5. AIR INTAKE LINES INSTALLATION (12010) 138
FIGURE 4-6. AIR CLEANER INSTALLATION (2733) 140
FIGURE 4-7. AIR CLEANER INSTALLATION (12010) 142
FIGURE 4-8. AIR CLEANER FILTER ASSEMBLY (90/100KW - 2733) 144
FIGURE 4-9. AIR CLEANER FILTER ASSEMBLY (12010) 146
FIGURE 4-10. AIR FILTER, RAIN CAP INSTALLATION 148
FIGURE 4-11. PRE-CLEANER, AIR FILTER INSTALLATION 150
FIGURE 4-12. FUEL FILTER INSTALLATION (2733) 152
FIGURE 4-13. FUEL FILTER INSTALLATION (12010) 154
FIGURE 4-14. FUEL LINES INSTALLATION (2733) 156
FIGURE 4-15. FUEL INTAKE LINES INSTALLATION (12010) 160
FIGURE 4-16. HYDROSTATIC DRIVE PUMP INSTALLATION 164
FIGURE 4-17. FUEL FILTER & FITTINGS ASSEMBLY (12010) 166
FIGURE 4-18. HYDROSTATIC PUMP ASSEMBLY 168
FIGURE 4-19. HYDRAULIC PUMP INSTALLATION 170
FIGURE 4-20. IMPLEMENT PUMP ASSEMBLY 172
FIGURE 4-21. DEF COOLANT LINES INSTALLATION 174
FIGURE 4-22. DEF TANK INSTALLATION 176
FIGURE 4-23. DEF TANK ASSEMBLY 178
FIGURE 4-24. DEF BREATHER VALVE 180
FIGURE 4-25. COOLING PACKAGE INSTALLATION (CUMMINS 4.5L - 2733) 182
FIGURE 4-26. COOLING PACKAGE INSTALLATION (CUMMINS 4.5L - 12010) 184
FIGURE 4-27. COOLING PACKAGE INSTALLATION (ASOV - 2733) 186
FIGURE 4-28. COOLING PACKAGE INSTALLATION (ASOV - 12010) 190
FIGURE 4-29. RADIATOR ASSEMBLY (2733) 192
FIGURE 4-30. RADIATOR ASSEMBLY (12010) 194
FIGURE 4-31. SURGE TANK INSTALLATION 196

FIGURE 4-32. COOLANT LINES INSTALLATION (2733) ... 198
FIGURE 4-33. COOLANT LINES INSTALLATION (12010) ... 200
FIGURE 4-34. CAC LINES INSTALLATION (CUMMINS 4.5L - 2733) ... 202
FIGURE 4-35. CAC LINES INSTALLATION (CUMMINS 4.5L - 12010) ... 204
FIGURE 4-36. CAC LINES INSTALLATION (ASOV - 2733) ... 206
FIGURE 4-37. CAC LINES INSTALLATION (ASOV - 12010) ... 208
FIGURE 4-38. ASOV LINES INSTALLATION ... 210
FIGURE 4-39. FAN GUARD INSTALLATION ... 212
FIGURE 4-40. COOLING FAN INSTALLATION ... 214
FIGURE 4-41. REVERSING FAN INSTALLATION ... 216
FIGURE 4-42. COMPRESSOR COVER INSTALLATION ... 218
FIGURE 4-43. EXHAUST INSTALLATION (CUMMINS 4.5L - 2733) ... 220
FIGURE 4-44. EXHAUST INSTALLATION (CUMMINS 4.5L - 12010) ... 222
FIGURE 4-45. CAB - HEATER LINES INSTALLATION (2733) ... 224
FIGURE 4-46. CAB - HEATER LINES INSTALLATION (12010) ... 226
FIGURE 4-47. DEF PUMP AND CONTROL INSTALLATION ... 228
FIGURE 4-48. DEF LINES INSTALLATION ... 230
FIGURE 4-49. DOC INSTALLATION ... 232
FIGURE 4-50. SCR INSTALLATION ... 234
FIGURE 4-51. A/C PUMP INSTALLATION (CUMMINS 4.5L) ... 236
FIGURE 4-52. A/C LINES INSTALLATION ... 238
FIGURE 4-53. BREATHER TUBE HEATER INSTALLATION ... 240
FIGURE 4-54. TRANSMISSION HYDROSTATIC ADAPTER INSTALLATION ... 242
FIGURE 4-55. REMOTE OIL FILTER INSTALLATION (2733) ... 244
FIGURE 4-56. REMOTE OIL FILTER INSTALLATION (12010) ... 246
FIGURE 4-57. OIL DRAIN HOSE INSTALLATION ... 248
FIGURE 4-58. QUICK DRAIN OIL VALVE INSTALLATION ... 250

SECTION 5 - DRIVE TRAIN ... 253

FIGURE 5-1. DRIVETRAIN INSTALLATION ... 254
FIGURE 5-2. GEARBOX INSTALLATION ... 256
FIGURE 5-3. GEARBOX ASSEMBLY ... 258
FIGURE 5-4. HYDRAULIC MOTOR INSTALLATION ... 260
FIGURE 5-5. FRONT DRIVESHAFT INSTALLATION ... 262
FIGURE 5-6. REAR DRIVESHAFT INSTALLATION ... 264
FIGURE 5-7. FRONT AXLE LINES INSTALLATION ... 266
FIGURE 5-8. FRONT AXLE MOUNTING INSTALLATION ... 268
FIGURE 5-9. FRONT AXLE ... 270
FIGURE 5-10. REAR AXLE LINES INSTALLATION ... 272
FIGURE 5-11. REAR AXLE MOUNTING INSTALLATION ... 274
FIGURE 5-12. REAR AXLE ... 276
FIGURE 5-13. TIRE/WHEEL SET (AIR 17.5-25 - 20 PLY), CAMSO L2 ... 278
FIGURE 5-14. TIRE/WHEEL SET (AIR 17.5-25 - 20 PLY), CAMSO L3 ... 280
FIGURE 5-15. TIRE/WHEEL SET (FOAM 17.5-25 - 20 PLY), CAMSO L2 ... 282
FIGURE 5-16. TIRE/WHEEL SET (FOAM 17.5-25 - 20 PLY), CAMSO L3 ... 284
FIGURE 5-17. CAB FENDER INSTALLATION ... 286

TABLE OF CONTENTS

FIGURE 5-18. FENDER INSTALLATION 288
FIGURE 5-19. RH FENDER ASSEMBLY 290
FIGURE 5-20. LH FENDER ASSEMBLY 292

SECTION 6 - CAB 295

FIGURE 6-1. CAB MOUNTING 296
FIGURE 6-2. CAB INSTALLATION 298
FIGURE 6-3. CAB ASSEMBLY 300
FIGURE 6-4. DOOR INSTALLATION 302
FIGURE 6-5. DOOR ASSEMBLY (AG) 304
FIGURE 6-6. CAB DOOR 306
FIGURE 6-7. DOOR UPPER GLASS ASSEMBLY 308
FIGURE 6-8. CAB LATCH ASSEMBLY 310
FIGURE 6-9. CAB DOOR TRIGGER ASSEMBLY 312
FIGURE 6-10. DOOR STRAP INSTALLATION 314
FIGURE 6-11. REAR WINDOW INSTALLATION 316
FIGURE 6-12. REAR WINDOW GROUP 318
FIGURE 6-13. CAB PLUG GROUP 320
FIGURE 6-14. BASIC MIRROR INSTALLATION 322
FIGURE 6-15. FRONT WIPER INSTALLATION 324
FIGURE 6-16. WASHER TANK INSTALLATION 326
FIGURE 6-17. WASHER BOTTLE 328
FIGURE 6-18. FRONT COVER INSTALLATION 330
FIGURE 6-19. FIRE EXTINGUISHER INSTALLATION 332
FIGURE 6-20. FRONT DUCT COVER 334
FIGURE 6-21. FILTER TRAY PANEL 336
FIGURE 6-22. LEVEL INDICATOR INSTALLATION 338
FIGURE 6-23. CAB STORAGE TRAY INSTALLATION 340
FIGURE 6-24. GRAB HANDLE INSTALLATION 342
FIGURE 6-25. REAR WIPER INSTALLATION 344
FIGURE 6-26. MULTIFUNCTION DISPLAY INSTALLATION 346
FIGURE 6-27. SEAT INSTALLATION 348
FIGURE 6-28. SUSPENSION SEAT ASSEMBLY 350
FIGURE 6-29. SEAT INSTALLATION (CLOTH) 352
FIGURE 6-30. SEAT ASSEMBLY 354
FIGURE 6-31. SEAT ASSEMBLY 356
FIGURE 6-32. SEAT INSTALLATION (AIR SUSPENSION - STANDARD) 358
FIGURE 6-33. SEAT ASSEMBLY (AIR SUSPENSION - STANDARD) 360
FIGURE 6-34. UPPER SEAT ASSEMBLY 362
FIGURE 6-35. SUSPENSION KIT 364
FIGURE 6-36. SEAT INSTALLATION (AIR SUSPENSION - PREMIUM) 366
FIGURE 6-37. SEAT INSTALLATION (CLOTH) (SEAOP) 368
FIGURE 6-38. SEAT ASSEMBLY (AIR SUSPENSION - PREMIUM) 370
FIGURE 6-39. HEATER INSTALLATION 372
FIGURE 6-40. HEATER AND A/C INSTALLATION (CAB PARTS) 374
FIGURE 6-41. CAB CONDENSER ASSEMBLY 378

FIGURE 6-42. CONDENSER 380
FIGURE 6-43. A/C RECEIVER DRIER 382
FIGURE 6-44. HEATER ASSEMBLY 384
FIGURE 6-45. HEATER AND A/C ASSEMBLY 386
FIGURE 6-46. HEATER 388
FIGURE 6-47. HEATER AND A/C ASSEMBLY 390
FIGURE 6-48. ROOF WIPER INSTALLATION 392
FIGURE 6-49. HEADLINER INSTALLATION 394
FIGURE 6-50. HEADLINER/RADIO READY PACKAGE INSTALLATION 396
FIGURE 6-51. CAB TRIM INSTALLATION 398
FIGURE 6-52. DASH COVER ASSEMBLY 402
FIGURE 6-53. REAR PANEL COVER ASSEMBLY 404
FIGURE 6-54. ADJUSTABLE ARMREST INSTALLATION 406
FIGURE 6-55. ROOF CAP INSTALLATION (NO A/C) 408
FIGURE 6-56. ROOF CAP INSTALLATION (A/C) 410
FIGURE 6-57. NO SUNSCREEN INSTALLATION 412
FIGURE 6-58. RETRACTABLE SUNSCREEN INSTALLATION 414
FIGURE 6-59. NON SKID TAPE INSTALLATION 416
FIGURE 6-60. FLOOR MAT INSTALLATION 418
FIGURE 6-61. SEAT BELT INSTALLATION (3IN) 420
FIGURE 6-62. SEAT BELT INSTALLATION (2IN) 422
FIGURE 6-63. SEAT BELT INSTALLATION (3 INCH) 424
FIGURE 6-64. ENCLOSED CAB FRONT COVER INSTALLATION 426
FIGURE 6-65. CAB GUARD INSTALLATION (TOP) 428
FIGURE 6-66. CAB GUARD INSTALLATION (FRONT) 430
FIGURE 6-67. CAB GUARD INSTALLATION (TOP AND FRONT) 432
FIGURE 6-68. EXTERNAL WINDOW RELEASE INSTALLATION (ANSI) 434
FIGURE 6-69. REAR WINDOW INSTALLATION (WO/WIPER) (ISO) 436
FIGURE 6-70. EXTERNAL WINDOW RELEASE INSTALLATION (CAN & ISO) 438
FIGURE 6-71. ARMREST 440
FIGURE 6-72. FIXED ARMREST BRACKET 442
FIGURE 6-73. MOVING ARMREST BRACKET 444

SECTION 7 - CONTROLS 447

FIGURE 7-1. ACCELERATOR PEDAL INSTALLATION 448
FIGURE 7-2. ACCELERATOR PEDAL 450
FIGURE 7-3. BRAKE PEDAL INSTALLATION 452
FIGURE 7-4. BRAKE PEDAL ASSEMBLY 454
FIGURE 7-5. BRAKE SENSOR INSTALLATION 456
FIGURE 7-6. SWITCH PLATE ASSEMBLY 458
FIGURE 7-7. TILT STEERING COLUMN INSTALLATION 460
FIGURE 7-8. COLUMN SHIFT INSTALLATION (2 SPEED) 462
FIGURE 7-9. STEERING WHEEL INSTALLATION 464
FIGURE 7-10. STEERING WHEEL 466
FIGURE 7-11. HORN BUTTON INSTALLATION 468
FIGURE 7-12. JOYSTICK INSTALLATION (2 SPEED) 470

TABLE OF CONTENTS

FIGURE 7-13. WIPER-TURN SWITCH....472
FIGURE 7-14. COLUMN CLAMP INSTALLATION....474

SECTION 8 - HYDRAULIC CIRCUITS....477

FIGURE 8-1. BOOM HYDRAULIC INSTALLATION....478
FIGURE 8-2. BOOM HYDRAULIC LINES INSTALLATION....480
FIGURE 8-3. BOOM AUX HYDRAULIC INSTALLATION (MANUAL - SINGLE)....482
FIGURE 8-4. BOOM AUX HYDRAULIC INSTALLATION (HYDRAULIC - TWIN)....484
FIGURE 8-5. BOOM AUX HYDRAULIC INSTALLATION (MANUAL - TWIN)....486
FIGURE 8-6. DUAL COUPLER AUX HYDRAULIC INSTALLATION....488
FIGURE 8-7. AUXILIARY HYDRAULIC VALVE INSTALLATION....490
FIGURE 8-8. AUXILIARY HYDRAULIC VALVE INSTALLATION....492
FIGURE 8-9. VALVE AUX HTDRAULIC INSTALLATION....494
FIGURE 8-10. BOOM RAISE HOSE INSTALLATION (WITHOUT RIDE CONTROL)....496
FIGURE 8-11. BOOM RAISE HOSE INSTALLATION (RIDE CONTROL)....498
FIGURE 8-12. CAB HYDRAULICS INSTALLATION....500
FIGURE 8-13. CHECK VALVE INSTALLATION....502
FIGURE 8-14. CAB CHECK VALVE & FITTING ASSEMBLY....504
FIGURE 8-15. CHARGE FILTER HOSE INSTALLATION....506
FIGURE 8-16. CHARGE FILTER INSTALLATION....508
FIGURE 8-17. IMPLEMENT PUMP FILTER ASSEMBLY....510
FIGURE 8-18. ENGINE BAY HYDRAULIC INSTALLATION....512
FIGURE 8-19. FRAME HYDRAULICS INSTALLATION....514
FIGURE 8-20. FRAME SWAY INSTALLATION....516
FIGURE 8-21. FRAME SWAY CYLINDER INSTALLATION....518
FIGURE 8-22. FRAME SWAY CONTROL VALVE INSTALLATION....520
FIGURE 8-23. FRAME SWAY CONTROL VALVE & FITTING ASEMBLY....522
FIGURE 8-24. MAIN CONTROL VALVE INSTALLATION....524
FIGURE 8-25. MAIN CONTROL VALVE & FITTINGS ASSEMBLY....526
FIGURE 8-26. PRIORITY VALVE INSTALLATION....528
FIGURE 8-27. PRIORITY VALVE & FITTING ASSEMBLY....530
FIGURE 8-28. COUNTERBALANCE VALVE ASSEMBLY....532
FIGURE 8-29. RIDE AND FLOAT VALVE ASSEMBLY....534
FIGURE 8-30. SAHR VALVE INSTALLATION....536
FIGURE 8-31. SAHR BRAKE VALVE & FITTING ASSEMBLY....538
FIGURE 8-32. SAHR BRAKE VALVE ASSEMBLY....540
FIGURE 8-33. BRAKE VALVE RELAY INSTALLATION....542
FIGURE 8-34. BRAKE VALVE RELAY ASSEMBLY....544
FIGURE 8-35. SPEED CONTROL VALVE INSTALLATION....546
FIGURE 8-36. STEERING SELECT VALVE INSTALLATION....548
FIGURE 8-37. STEERING SELECT VALVE & FITTING ASSEMBLY....550
FIGURE 8-38. EMERGENCY LOWERING INSTALLATION....552
FIGURE 8-39. POWER UNIT INSTALLATION....554
FIGURE 8-40. AUXILIARY REDUCING VALVE ASSEMBLY....556
FIGURE 8-41. AUX POWER PUMP....558

SECTION 9 - HYDRAULIC COMPONENTS 561

FIGURE 9-1. CYLINDER INSTALLATION - EXTEND/RETRACT 562
FIGURE 9-2. CYLINDER ASSEMBLY- EXTEND/RETRACT 564
FIGURE 9-3. CYLINDER ASSEMBLY - FRAME LEVEL 566
FIGURE 9-4. CYLINDER INSTALLATION - LIFT 568
FIGURE 9-5. CYLINDER ASSEMBLY - LIFT 570
FIGURE 9-6. CYLINDER ASSEMBLY - QUICK COUPLER 572
FIGURE 9-7. CYLINDER ASSEMBLY - TILT 574
FIGURE 9-8. MOTOR ASSEMBLY – HYDRAULIC 576
FIGURE 9-9. PUMP ASSEMBLY - CHARGE 578
FIGURE 9-10. PUMP ASSEMBLY - DEF MODULE 580
FIGURE 9-11. PUMP ASSEMBLY - DRIVE 582
FIGURE 9-12. PUMP ASSEMBLY - PISTON 584
FIGURE 9-13. PUMP ASSEMBLY 586
FIGURE 9-14. VALVE ASSEMBLY - CHARGE FLOW CONTROL VALVE ASSEMBLY 588
FIGURE 9-15. VALVE ASSEMBLY - DIVERTOR VALVE 590
FIGURE 9-16. VALVE ASSEMBLY - LEVEL AND STABILIZATION VALVE 592
FIGURE 9-17. VALVE ASSEMBLY - MAIN CONTROL VALVE 594
FIGURE 9-18. VALVE ASSEMBLY - PRIORITY VALVE 596
FIGURE 9-19. VALVE ASSEMBLY - SAHR BRAKE VALVE 598
FIGURE 9-20. VALVE ASSEMBLY - DUAL AUXILIARY DIVERTOR VALVE 600
FIGURE 9-21. VALVE ASSEMBLY - STEERING SELECT VALVE 602
FIGURE 9-22. VALVE INSTALLATION - COUNTERBALANCE VALVE 604
FIGURE 9-23. VALVE ASSEMBLY - COUNTERBALANCE VALVE 606

SECTION 10 - ELECTRICAL 609

FIGURE 10-1. 2733 ELECTRICAL LAYOUT 610
FIGURE 10-2. ALARM INSTALLATION - BACKUP 620
FIGURE 10-3. ALARM INSTALLATION - BACKUP (WHITE NOISE) 622
FIGURE 10-4. ASOV HARNESS 624
FIGURE 10-5. ATTACHMENT RECOGNITION INSTALLATION (2733) 626
FIGURE 10-6. ATTACHMENT RECOGNITION (12010) 628
FIGURE 10-7. ATTACHMENT RECOGNITION HARNESS 630
FIGURE 10-8. BATTERY INSTALLATION - DUAL 632
FIGURE 10-9. BATTERY INSTALLATION - DUAL (WITH BREATHER TUBE HEATER) 634
FIGURE 10-10. BATTERIES INSTALLATION - ARCTIC (115V) 636
FIGURE 10-11. BOOM TO FRAME HARNESS 638
FIGURE 10-12. COUPLER ANGLE SENSOR INSTALLATION 640
FIGURE 10-13. BOOM ANGLE SENSOR INSTALLATION (STD) 642
FIGURE 10-14. BOOM RETRACT SENSOR INSTALLATION 644
FIGURE 10-15. BOOM RETRACT SOFT STOP HARNESS 646
FIGURE 10-16. BOOM RIDE/FLOAT HARNESS 648
FIGURE 10-17. CAB ELECTRICAL INSTALLATION 650
FIGURE 10-18. CAB HARNESS 652
FIGURE 10-19. CAB - STANDARD ELECTRICAL BOARD ASSEMBLY 660

TABLE OF CONTENTS

FIGURE 10-20. CAB - OPTION 1 ELECTRICAL BOARD ASSEMBLY 662
FIGURE 10-21. CAB - OPTION 2 ELECTRICAL BOARD ASSEMBLY 664
FIGURE 10-22. CAB - A/C OPTION HARNESS 666
FIGURE 10-23. CAB - DASH ELECTRICAL INSTALLATION (2733) 668
FIGURE 10-24. CAB - DASH ELECTRICAL INSTALLATION (12010) 670
FIGURE 10-25. CAB - IGNITION SWITCH HARNESS 672
FIGURE 10-26. CAB - LIGHT SWITCH INSTALLATION 674
FIGURE 10-27. CAB OPTION HARNESS 676
FIGURE 10-28. CAB - SEAT ADAPTOR HARNESS 678
FIGURE 10-29. CAB SEAT BELT ALARM HARNESS 680
FIGURE 10-30. CLEARSKY INSTALLATION 682
FIGURE 10-31. CLEARSKY HARNESS 684
FIGURE 10-32. COLD WEATHER PACKAGE INSTALLATION (ARCTIC) 686
FIGURE 10-33. EMERGENCY STOP EXTERNAL INSTALLATION 688
FIGURE 10-34. ENGINE BAY ELECTRICAL INSTALLATION (2733) 690
FIGURE 10-35. ENGINE BAY ELECTRICAL INSTALLATION (12010) 692
FIGURE 10-36. ENGINE BAY WIRING INSTALLATION (2733) 694
FIGURE 10-37. ENGINE BAY WIRING INSTALLATION (12010) 696
FIGURE 10-38. ENGINE - ENGINE HARNESS (CUMMINS) 698
FIGURE 10-39. ENGINE - DEF PURGE LIGHT HARNESS 700
FIGURE 10-40. ENGINE WIRING INSTALLATION (2733) 702
FIGURE 10-41. ENGINE WIRING INSTALLATION (12010) 704
FIGURE 10-42. ENGINE HARNESS (CUMMINS) - 2733 706
FIGURE 10-43. ENGINE HARNESS (CUMMINS) - 12010 710
FIGURE 10-44. FRAME ELECTRICAL INSTALLATION 714
FIGURE 10-45. FRAME - ELECTRICAL POWER DISTRIBUTION BOX 716
FIGURE 10-46. FRAME WIRING INSTALLATION 718
FIGURE 10-47. FRAME WIRING INSTALLATION (12010) 720
FIGURE 10-48. FRAME - FRONT FRAME POWER HARNESS 722
FIGURE 10-49. FRAME - REAR FRAME POWER HARNESS 724
FIGURE 10-50. FRONT FRAME HARNESS 728
FIGURE 10-51. FRAME - REAR FRAME MODULE INSTALLATION 734
FIGURE 10-52. FRAME - RIDE CONTROL WIRING INSTALLATION 736
FIGURE 10-53. HEATER INSTALLATION - FUEL FILTER 738
FIGURE 10-54. HEATER INSTALLATION - HYDRAULIC TANK 740
FIGURE 10-55. HEATER INSTALLATION - OIL PAN 742
FIGURE 10-56. HVAC ACTUATOR HARNESS 744
FIGURE 10-57. LIGHTS - BOOM WORKLIGHTS INSTALLATION (LED) 746
FIGURE 10-58. LIGHTS - BOOM WORKLIGHTS HARNESS 748
FIGURE 10-59. LIGHTS - CAB WORKLIGHTS INSTALLATION (NO A/C - LED) 750
FIGURE 10-60. LIGHTS - CAB WORKLIGHTS INSTALLATION (A/C - LED) 752
FIGURE 10-61. LIGHTS - HEADLIGHT HARNESS 754
FIGURE 10-62. LIGHTS - ROAD LIGHTS INSTALLATION (LED) 756
FIGURE 10-63. LIGHTS - TAILIGHT HARNESS 758
FIGURE 10-64. LMIS INSTALLATION 760

FIGURE 10-65. LMIS BEACON LIGHT INSTALLATION 762
FIGURE 10-66. LMIS BEACON OPTION HARNESS 764
FIGURE 10-67. LMIS BOOM HARNESS 766
FIGURE 10-68. LMIS CABLE REEL INSTALLATION 768
FIGURE 10-69. LMIS CHASSIS OPTION HARNESS 770
FIGURE 10-70. LMIS TILT SENSOR INSTALLATION 772
FIGURE 10-71. LSI INSTALLATION 774
FIGURE 10-72. LSI DISPLAY INSTALLATION 776
FIGURE 10-73. LSI SENSOR INSTALLATION 778
FIGURE 10-74. PLATFORM HARNESS 780
FIGURE 10-75. PLATFORM READY HARNESS 782
FIGURE 10-76. REVERSE CAMERA INSTALLATION 784
FIGURE 10-77. REVERSE SENSOR INSTALLATION 786
FIGURE 10-78. REVERSE SENSOR HARNESS 788
FIGURE 10-79. REVERSING FAN HARNESS 790
FIGURE 10-80. RIGHT SIDE CAMERA INSTALLATION 792
FIGURE 10-81. MULTI VIEW CAMERA INSTALLATION 794
FIGURE 10-82. REMOTE BOOM CONTROL INSTALLATION 796
FIGURE 10-83. REMOTE CONTROL POWER HARNESS 798
FIGURE 10-84. REMOTE CONTROL EMERGENCY STOP SWITCH INSTALLATION 800
FIGURE 10-85. TELEMATICS READY INSTALLATION 802
FIGURE 10-86. TELEMATICS READY HARNESS 804
FIGURE 10-87. TILT SENSOR JUMPER HARNESS 806
FIGURE 10-88. TBAP HARNESS 808
FIGURE 10-89. TELEMATICS GATEWAY INSTALLATION 810
FIGURE 10-90. TELEMATICS GATEWAY HARNESS 812
FIGURE 10-91. EMERGENCY LOWERING HARNESS 814
FIGURE 10-92. TELEMATICS GATEWAY PLUS 816

SECTION 11 - DECALS 819

FIGURE 11-1. DECAL INSTALLATION (2733) 820
FIGURE 11-2. DECAL INSTALLATION (12010) 822
FIGURE 11-3. DECAL INSTALLATION (ANSI) 824
FIGURE 11-4. DECAL INSTALLATION (ISO) 828
FIGURE 11-5. DECAL INSTALLATION (CSA ENGLISH/FRENCH) 832
FIGURE 11-6. DECAL INSTALLATION (AUS - 2733) 836
FIGURE 11-7. DECAL INSTALLATION (AUS - 2733) 840
FIGURE 11-8. BOOM DECAL INSTALLATION 844
FIGURE 11-9. LOADCHARTS (ANSI) - 2733 846
FIGURE 11-10. LOADCHARTS (ISO) - 12010 848
FIGURE 11-11. LOAD CHART REMOTE INSTALLATION (ANSI) 850
FIGURE 11-12. LOAD CHART REMOTE INSTALLATION (ISO) 852
FIGURE 11-13. LOAD CHART REMOTE INSTALLATION (ISO) 854
FIGURE 11-14. CAPACITY CHART HOLDER INSTALLATION 856
FIGURE 11-15. REVERSE SENSOR SYSTEM DECAL (ENGLISH) 858
FIGURE 11-16. REVERSE SENSOR SYSTEM DECAL (ISO) 860

TABLE OF CONTENTS

FIGURE 11-17. REVERSE SENSING SYSTEM DECAL, (ENGLISH/FRENCH) 862
FIGURE 11-18. CLEARSKY DECAL INSTALLATION 864

SECTION 12 - RECOMMENDED SERVICE PARTS STOCK 867

FIGURE 12-1. RECOMMENDED SERVICE PARTS STOCK 868

SECTION 13 - SPECIAL OPTIONS/ACCESSORIES/KITS 871

FIGURE 13-1. SPECIAL OPTIONS/ACCESSORIES/KITS 872

PART NUMBER INDEX 873

SECTION 1 - FRAME AND ATTACHING PARTS

FIGURE 1-1. HITCHPIN INSTALLATION

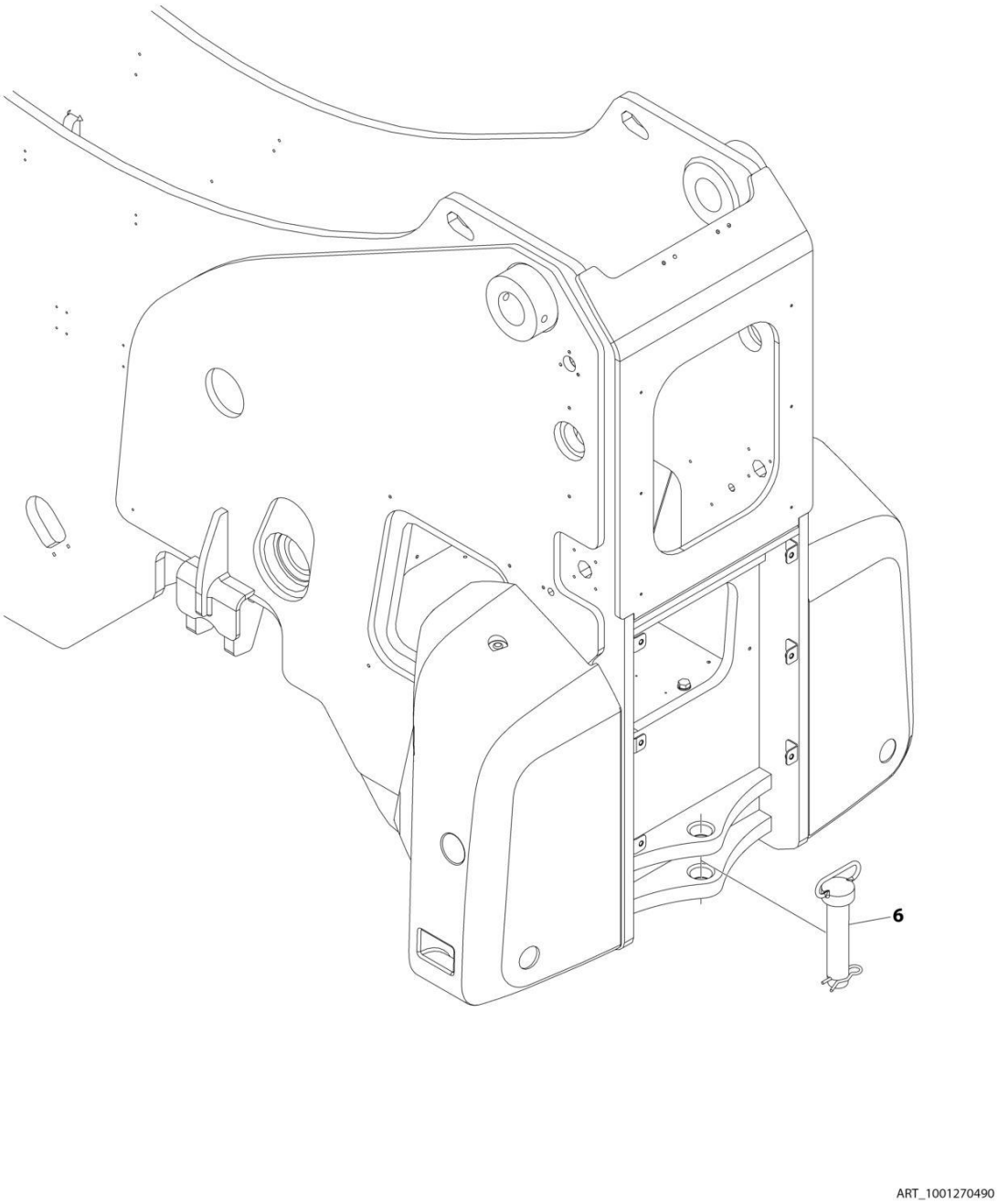

FIGURE 1-1. HITCHPIN INSTALLATION

ITEM	PART NUMBER	QTY	DESCRIPTION	REV
	1001270490	Ref	HITCHPIN INSTALLATION	A
6	1001197955	1	Pin, Hitch	

FIGURE 1-2. ENGINE ENCLOSURE INSTALLATION

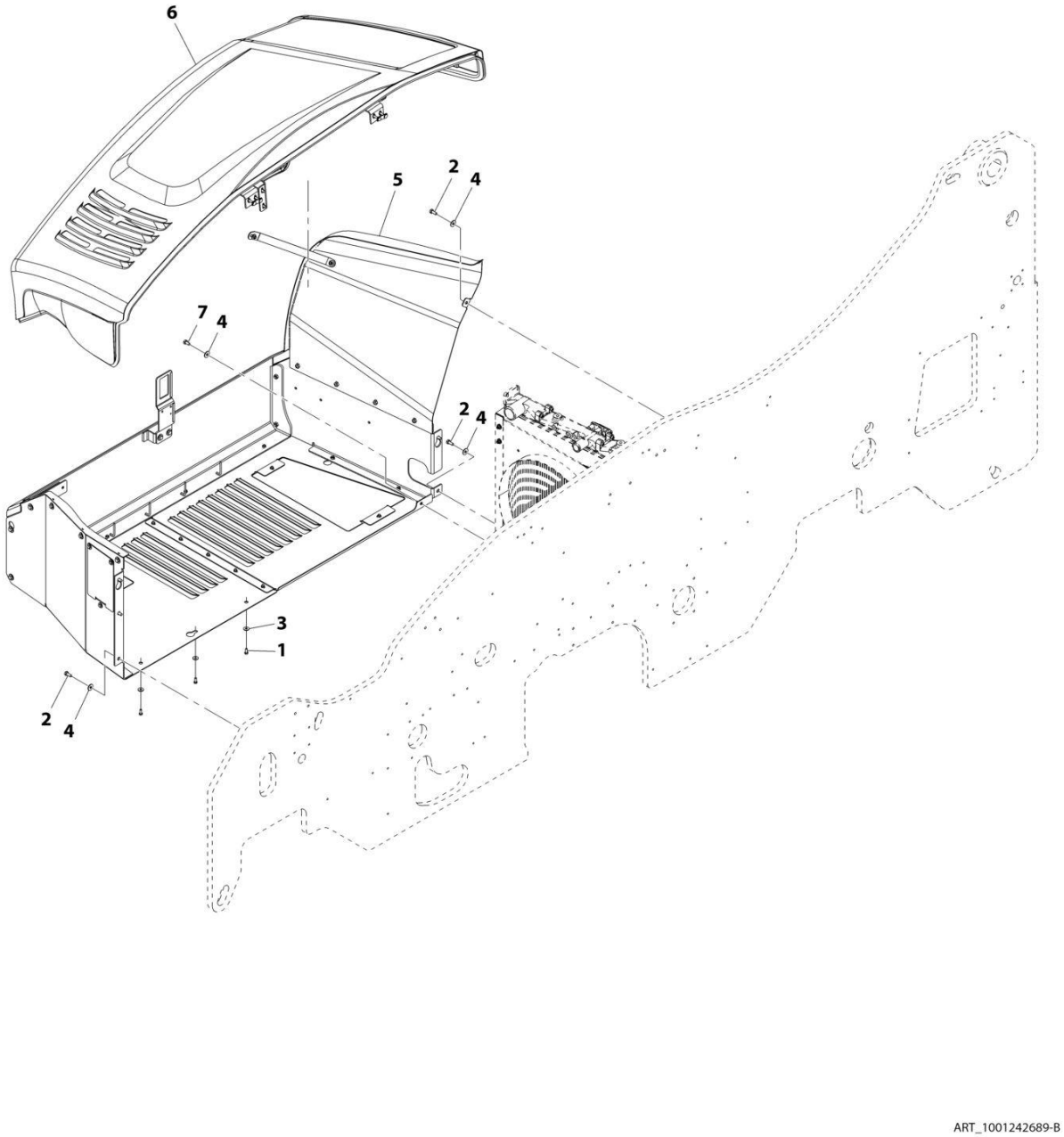

FIGURE 1-2. ENGINE ENCLOSURE INSTALLATION

ITEM	PART NUMBER	QTY	DESCRIPTION	REV
	1001242689	Ref	Engine Enclosure Installation	B
1	0760810	3	Bolt, M8X20	
2	0761012	6	Bolt, M10X25	
3	4811902	3	Washer, M8	
4	4812002	7	Washer, M10	
5	1001236131	1	Installation, Enclosure Skirt (See Separate Breakdown in this Section)	
6	1001239257	1	Installation, Hood (See Separate Breakdown in this Section)	
7	0761010	1	Bolt, M10X20	

FIGURE 1-3. ENCLOSURE SKIRT INSTALLATION

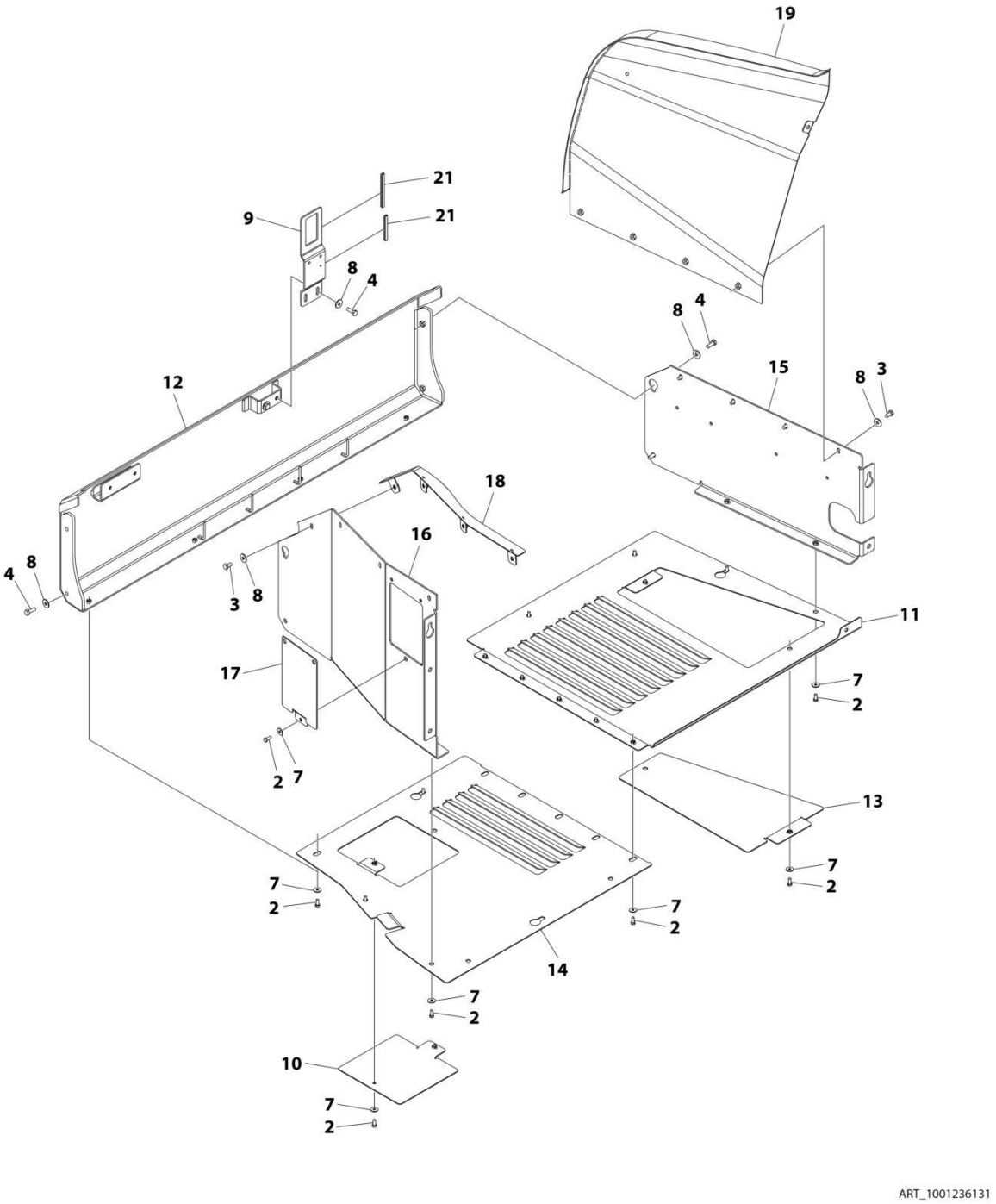

FIGURE 1-3. ENCLOSURE SKIRT INSTALLATION

ITEM	PART NUMBER	QTY	DESCRIPTION	REV
	1001236131	Ref	ENCLOSURE SKIRT INSTALLATION	C
2	0760810	20	Bolt M8 x 20	
3	0761010	8	Bolt M10 x 20	
4	0761014	6	Bolt M10 x 30	
7	4811902	20	Washer M8	
8	4812002	14	Washer M10	
9	1001154688	1	Plate, Latch	
10	1001194969	1	Plate, Access Panel	
11	1001242690	1	Panel, Bottom Cover Assembly	
12	1001242692	1	Panel, Side Skirt Assembly	
13	1001242719	1	Plate, Access Panel	
14	1001242721	1	Panel Bottom Cover Front	
15	1001242723	1	Panel, Rear Skirt	
16	1001242725	1	Panel, Front Skirt	
17	1001246770	1	Plate, Access Panel	
18	1001246771	1	Mount	
19	1001246801	1	Panel, Rear Cover	
21	4060804	235 mm	Shield	

FIGURE 1-4. HOOD INSTALLATION

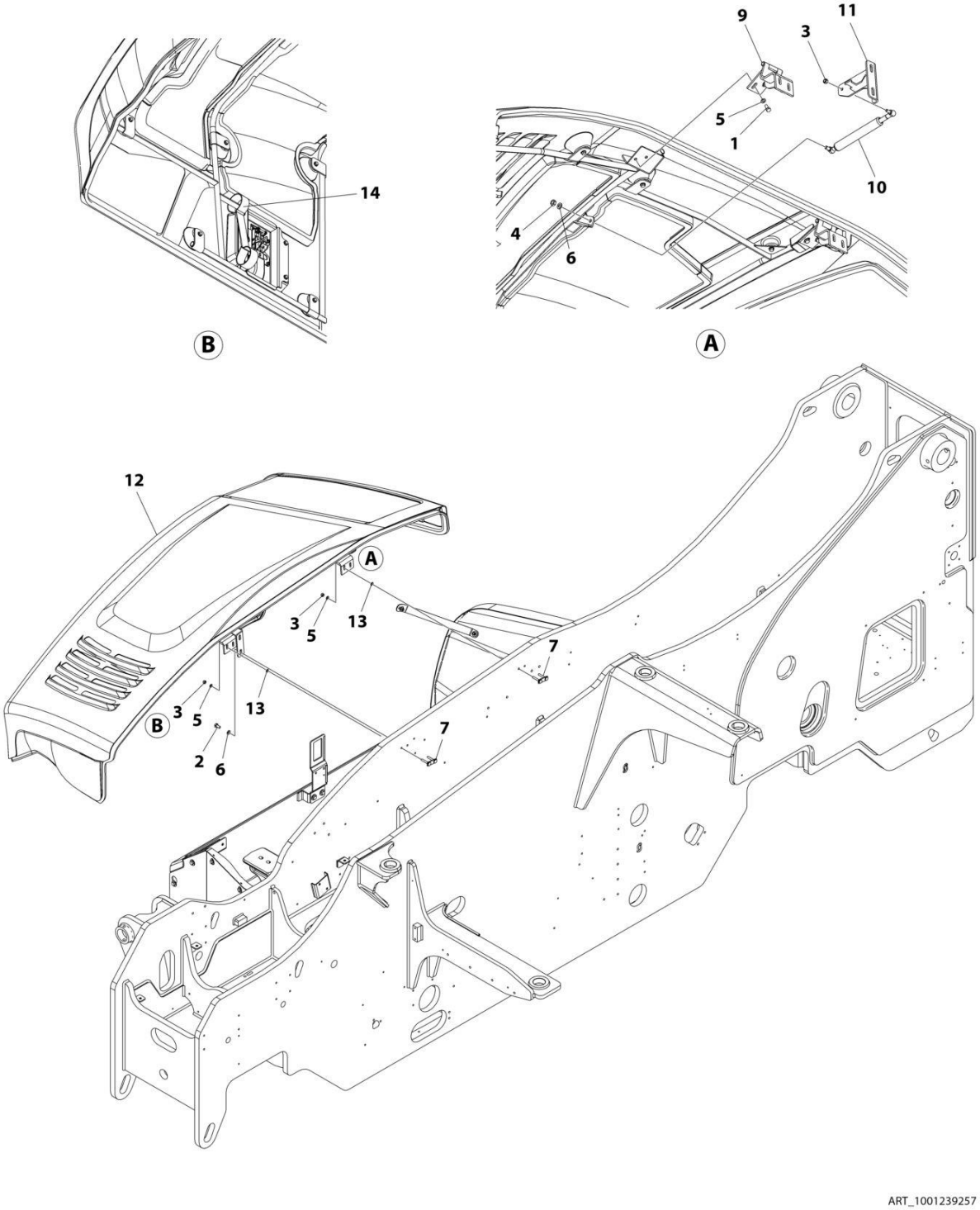

FIGURE 1-4. HOOD INSTALLATION

ITEM	PART NUMBER	QTY	DESCRIPTION	REV
	1001239257	Ref	HOOD INSTALLATION	C
1	0760810	4	Bolt M8 x 20	
2	0761010	2	Bolt M10 x 20	
3	3290805	5	Nut M8 x 1.25	
4	3291001	1	Nut M10 x 1.5	
5	4811900	8	Washer M8	
6	4812000	3	Washer M10	
7	1001195587	2	Brace, Hood Hinge	
9	1001205080	2	Hinge, Hood	
10	1001257090	1	Spring	
11	1001239256	1	Bracket	
12	1001246800	1	Hood Assembly	
13	1001256264	4	Washer M8	
14	1001265032	1	Strap, Hand Pull	

FIGURE 1-5. CLOSURE INSTALLATION (2733)

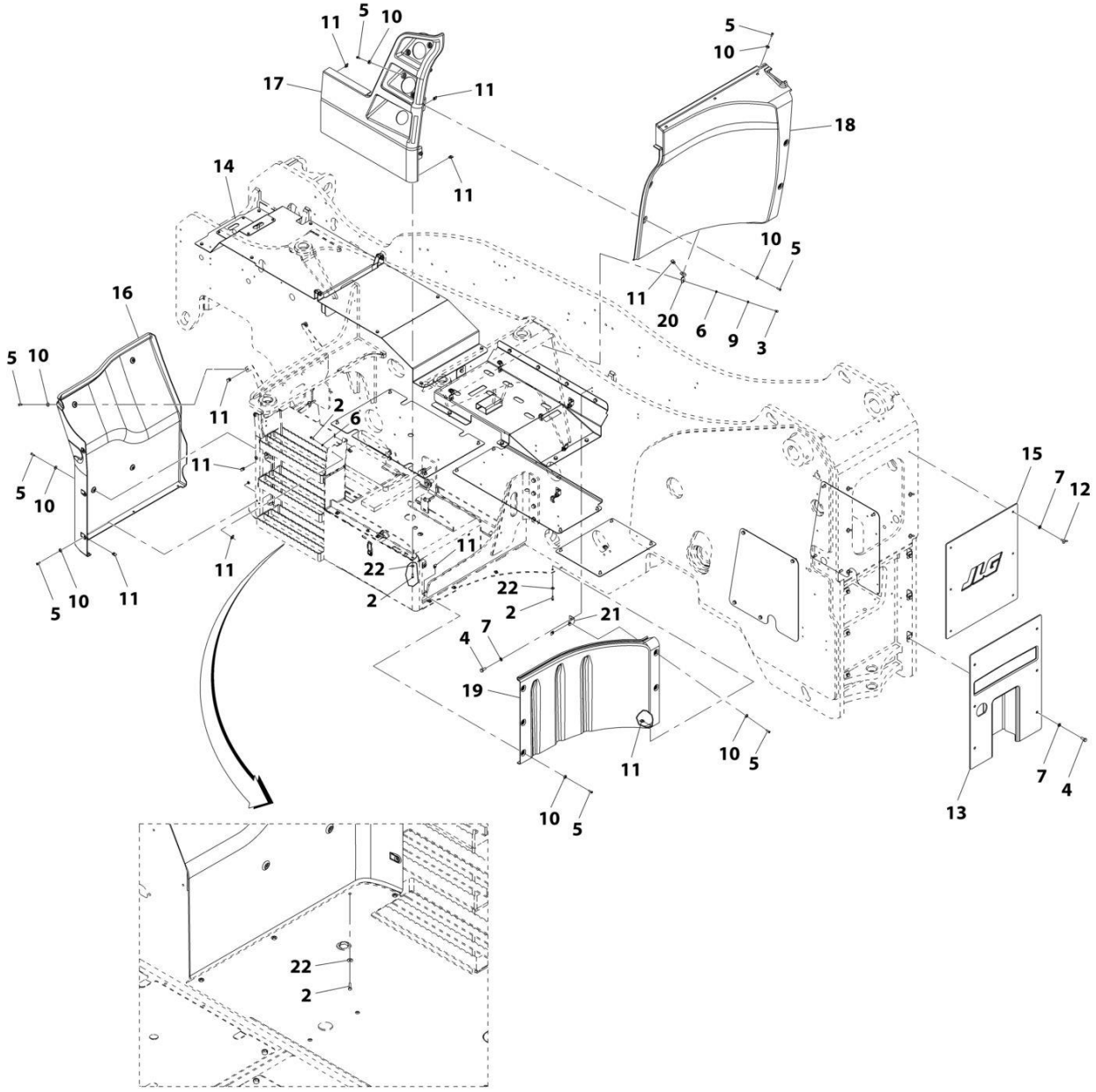

FIGURE 1-5. CLOSURE INSTALLATION (2733)

ITEM	PART NUMBER	QTY	DESCRIPTION	REV
	1001246734	Ref	Closures Installation	D
2	0700610	12	Bolt, M6X20	
3	0760607	3	Bolt, M6X14	
4	0761012	10	Bolt, M10X25	
5	3900379	23	Screw, M6-1X25	
6	4811700	4	Washer, M6	
7	4812000	16	Washer, M10	
9	4831700	3	Washer, Lock M6	
10	1001097540	23	Washer, M6	
11	1001130220	28	Nut, M6	
12	1001250708	6	Bolt, M8X20	
13	1001246376	1	Cover, Rear Frame	
14	1001239507	1	Installation, Frame Covers (See Separate Breakdown in this Section)	
15	1001246375	1	Cover, Rear Frame	
16	1001247056	1	Cover, Lower Front	
17	1001247103	1	Cover, Side Tank	
18	1001247148	1	Cover, Rear Tank	
19	1001247199	1	Cover, Lower Rear Tank	
20	1001247384	3	Bracket	
21	1001247414	4	Bracket	
22	4811702	11	Washer, M6	

FIGURE 1-6. CLOSURE INSTALLATION (12010)

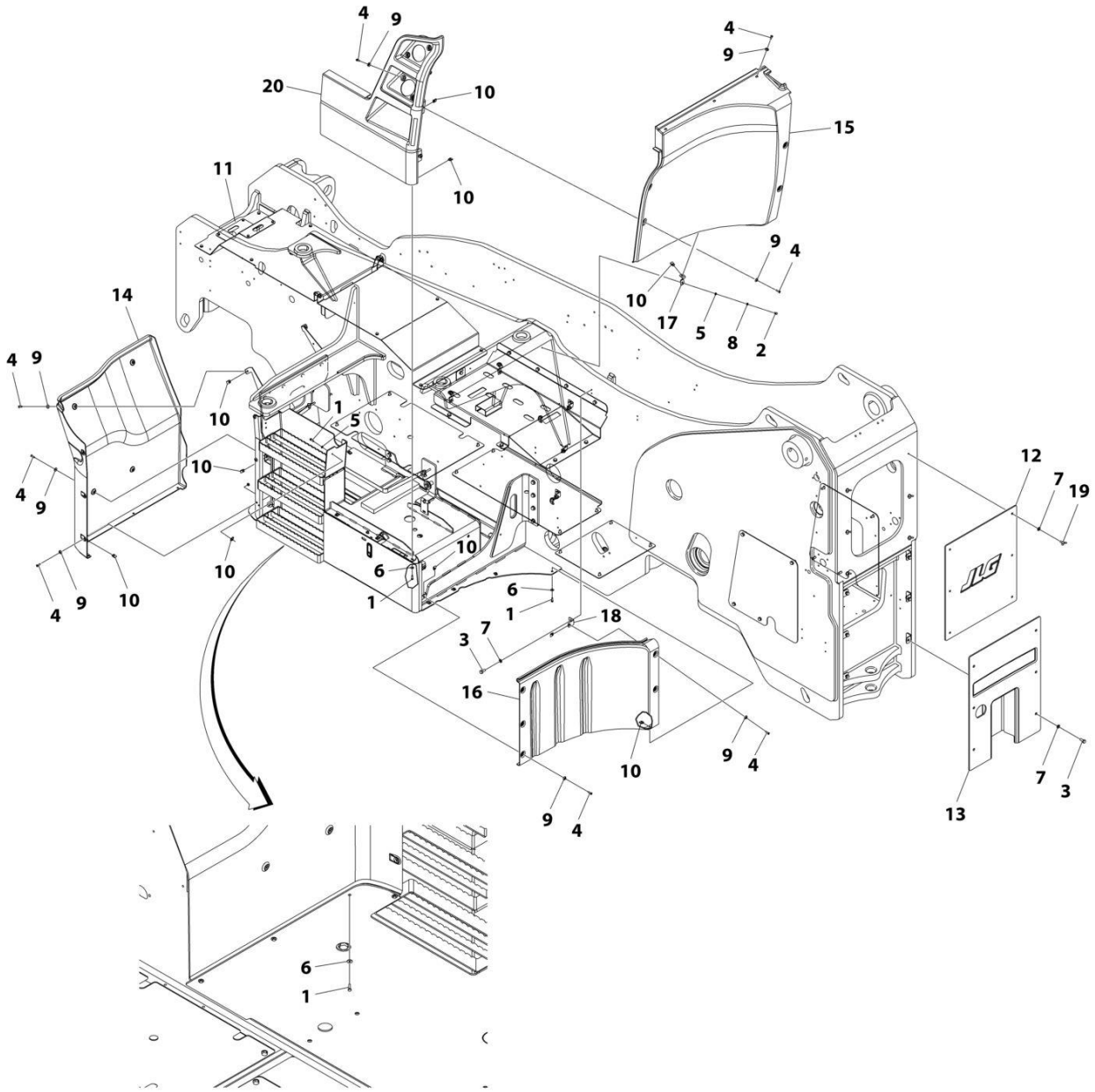

FIGURE 1-6. CLOSURE INSTALLATION (12010)

ITEM	PART NUMBER	QTY	DESCRIPTION	REV
	1001268597	Ref	CLOSURE INSTALLATION	A
1	0700610	12	Bolt M6 x 20	
2	0760607	3	Bolt M6 x 14	
3	0761012	10	Bolt M10 x 25	
4	3900379	23	Screw M6 x 25	
5	4811700	4	Washer M6	
6	4811702	11	Washer M6	
7	4812000	16	Washer M10	
8	4831700	3	Washer M6	
9	1001097540	23	Washer M6	
10	1001130220	28	Nut M6	
11	1001239507	1	Installation, Frame Covers (See Separate Breakdown in this Section)	
12	1001246375	1	Cover, Rear Frame	
13	1001246376	1	Cover, Rear Frame	
14	1001247056	1	Cover, Lower Front	
15	1001247148	1	Cover, Rear Tank	
16	1001247199	1	Cover, Lower Rear Tank	
17	1001247384	3	Bracket	
18	1001247414	4	Bracket	
19	1001250708	6	Bolt M8 x 20	
20	1001268596	1	Cover, Side Tank	

FIGURE 1-7. FRAME COVER INSTALLATION

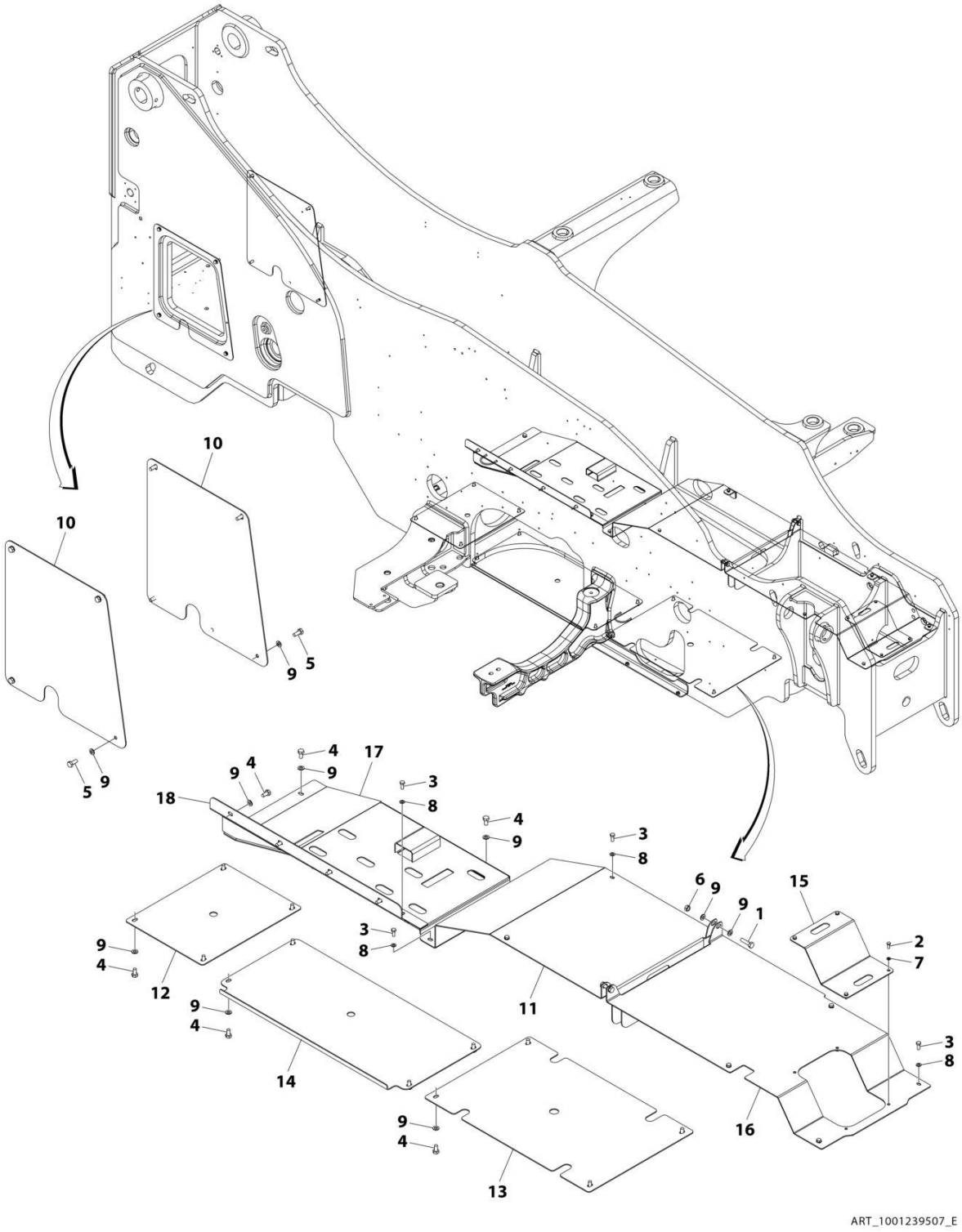

FIGURE 1-7. FRAME COVER INSTALLATION

ITEM	PART NUMBER	QTY	DESCRIPTION	REV
	1001239507	Ref	FRAME COVER INSTALLATION	E
1	0701016	2	Bolt M10 x 40	
2	0760608	4	Bolt M6 x 16	
3	0760810	10	Bolt M8 x 20	
4	0761010	20	Bolt M10 x 20	
5	0761012	8	Bolt M10 x 25	
6	3291001	2	Nut M10	
7	4811700	4	Washer M6	
8	4811900	10	Washer M8	
9	4812000	32	Washer M10	
10	1001239486	2	Plate, Frame Cover	
11	1001239488	1	Plate, Frame Cover	
12	1001239490	1	Plate, Frame Cover	
13	1001239491	1	Plate, Frame Cover	
14	1001239492	1	Plate, Frame Cover	
15	1001245200	1	Plate, Frame Cover	
16	1001245201	1	Assembly, Frame Cover	
17	1001245707	1	Assembly, Frame Cover	
18	1001239489	1	Plate, Frame Cover	

FIGURE 1-8. HYDRAULIC TANK INSTALLATION

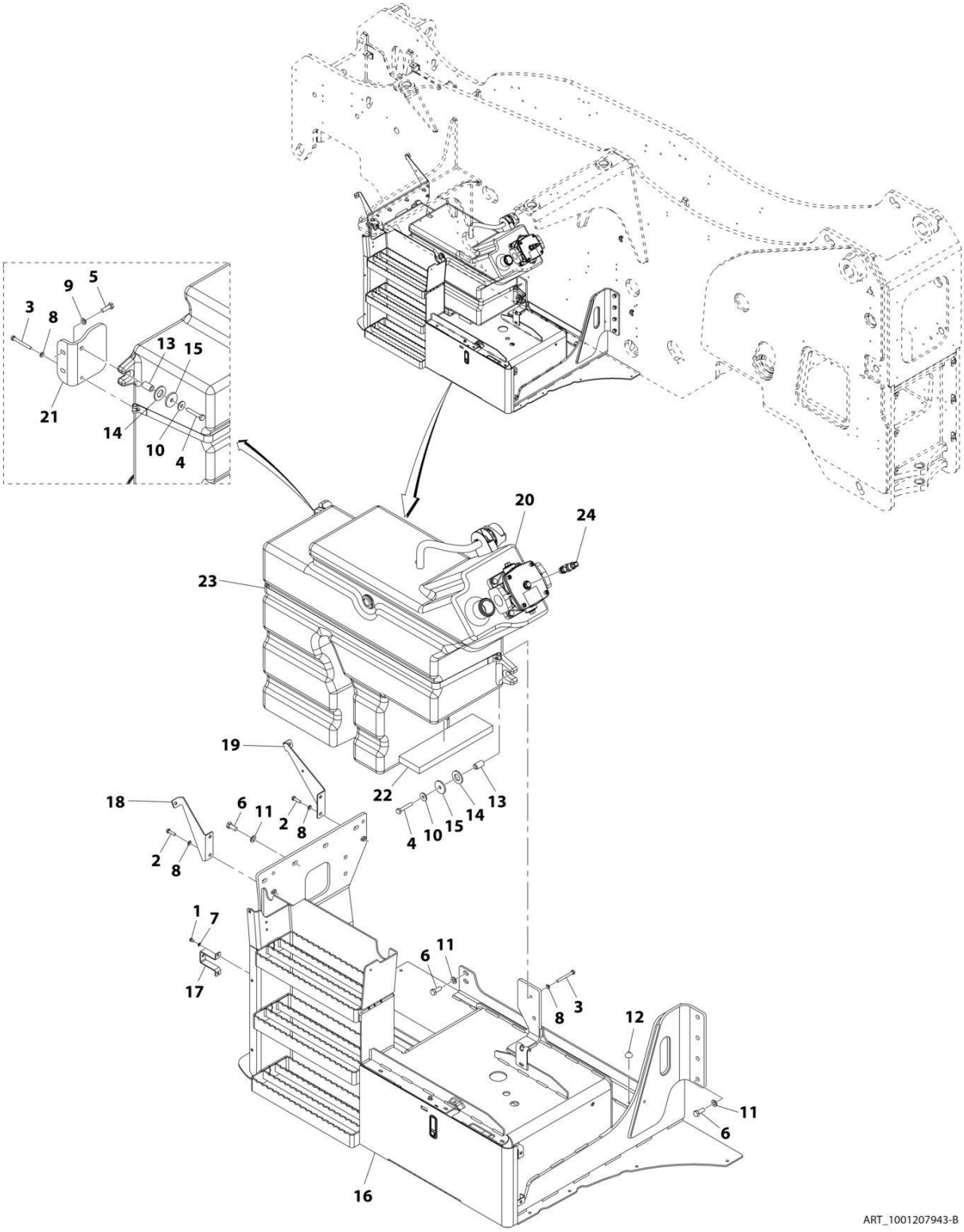

FIGURE 1-8. HYDRAULIC TANK INSTALLATION

ITEM	PART NUMBER	QTY	DESCRIPTION	REV
	1001207943	Ref	Hydraulic Tank Installation	B
1	0700605	4	Bolt, M6X10	
2	0700814	4	Bolt, M8X30	
3	0760823	2	Bolt, M8X75	
4	0701020	2	Bolt, M10X60	
5	0711015	2	Bolt, M10X35	
6	0761214	10	Bolt, M12X30	
7	4811700	4	Washer, M6	
8	4811900	6	Washer, M8	
9	4812000	2	Washer, M10	
10	4812002	2	Washer, M10	
11	4812100	10	Washer, M12	
12	1001169454	4	Buffer	
13	1001171179	2	Spacer	
14	1001172146	2	Washer, Rubber	
15	1001172147	2	Washer, M10	
16	1001205205	1	Support	
17	1001206850	2	Support	
18	1001206875	1	Support	
19	1001206876	1	Support	
20	1001207944	1	Tank (See Separate Breakdown in this Section)	
21	1001208026	1	Bracket	
22	1001208674	1	Insulate, Oil Tank	
23	1001208676	1	Strap	
24	1001255573	1	Switch, Pressure	

FIGURE 1-9. HYDRAULIC TANK ASSEMBLY

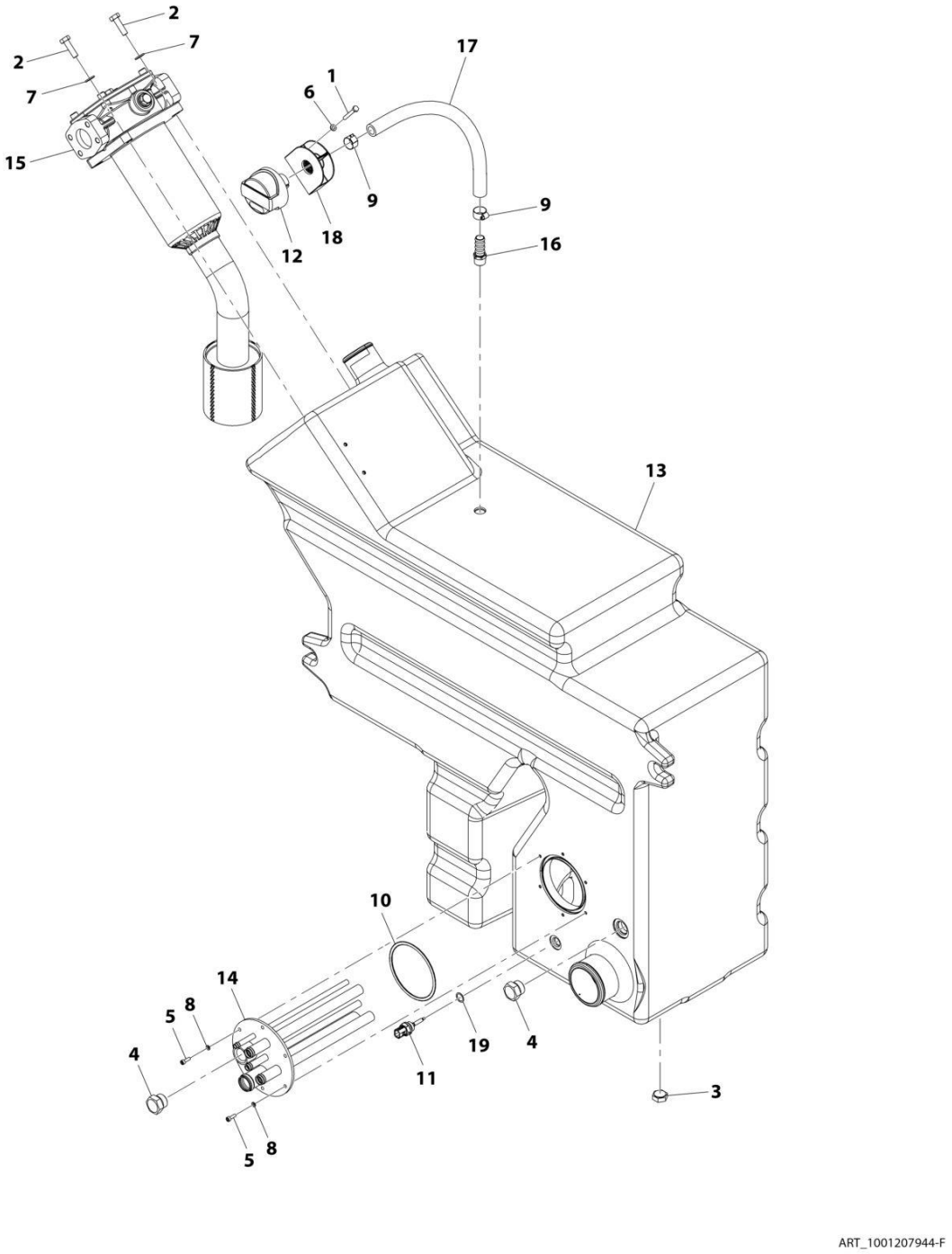

FIGURE 1-9. HYDRAULIC TANK ASSEMBLY

ITEM	PART NUMBER	QTY	DESCRIPTION	REV
	1001207944	Ref	Hydraulic Tank Assembly	F
1	0700617	2	Bolt, M6X45	
2	0711015	4	Bolt, M10X35	
3	2220239	1	Plug	
4	2220240	2	Plug	
5	4031607	6	Bolt, M5X16	
6	4811700	2	Washer, M6	
7	4812000	4	Washer, M10	
8	4831600	6	Washer, Lock M5	
9	8405006	2	Clamp, Gear	
10	1001003301	1	Seal O-Ring	
11	1001128478	1	Sensor, Temperature	
12	1001187877	1	Filter, Breather	
13	1001207945	1	Tank, Hydraulic	
14	1001191157	1	Manifold, Hydraulic Return	
15	1001243844	1	Filter	
16	1001239853	1	Straight, Adapter	
17	1001239856	1	Hose	
18	1001241350	1	Filter, Remote	
19	1001009163	1	O-Ring	

FIGURE 1-10. FUEL TANK INSTALLATION

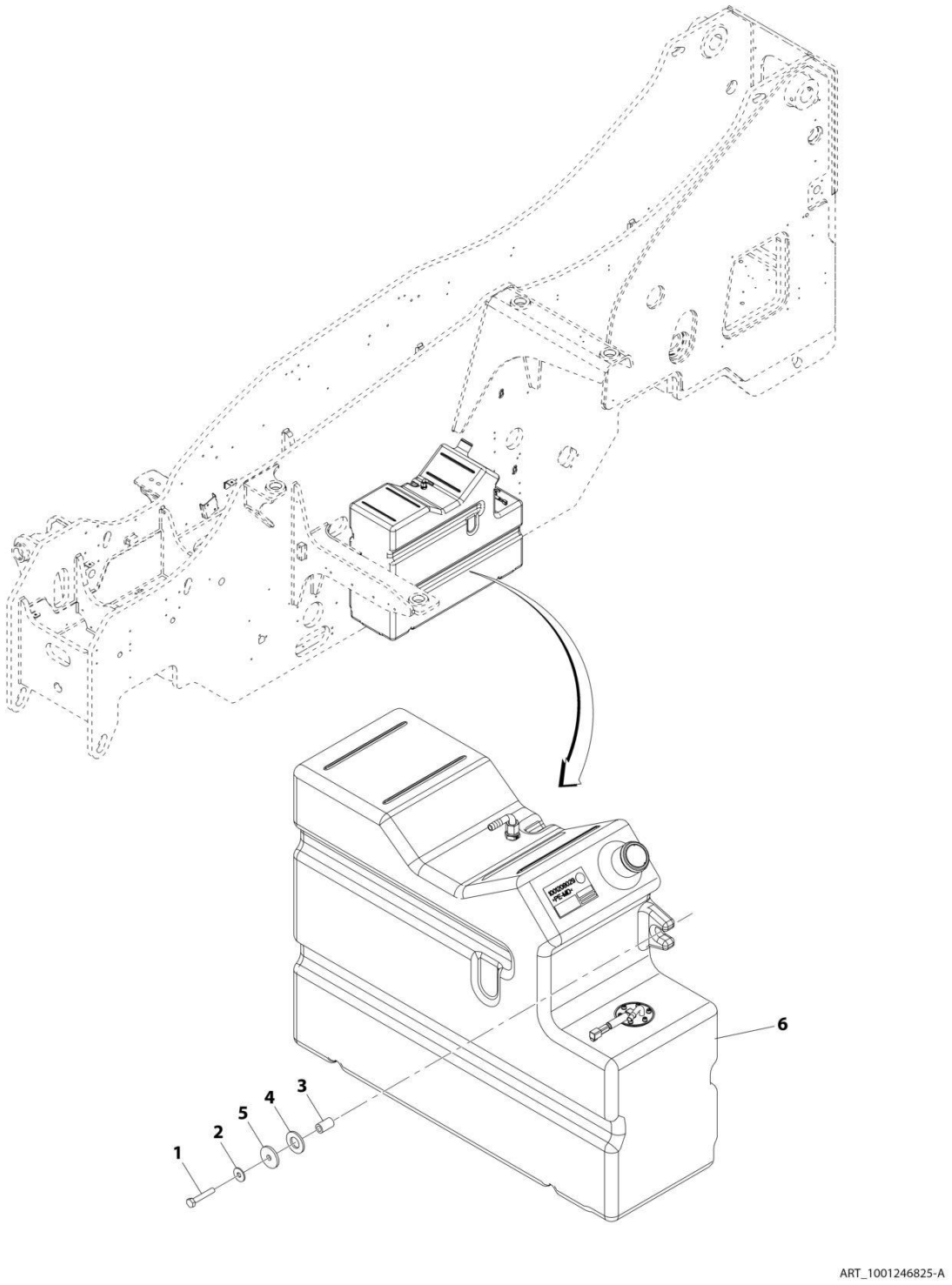

FIGURE 1-10. FUEL TANK INSTALLATION

ITEM	PART NUMBER	QTY	DESCRIPTION	REV
	1001246825	Ref	Fuel Tank Installation	A
1	0701020	2	Bolt, M10X60	
2	4812002	2	Washer, M10	
3	1001171179	2	Spacer	
4	1001172146	2	Washer, Rubber	
5	1001172147	2	Washer, M10	
6	1001208028	1	Assembly, Fuel Tank (See Separate Breakdown in this Section)	

FIGURE 1-11. FUEL TANK ASSEMBLY

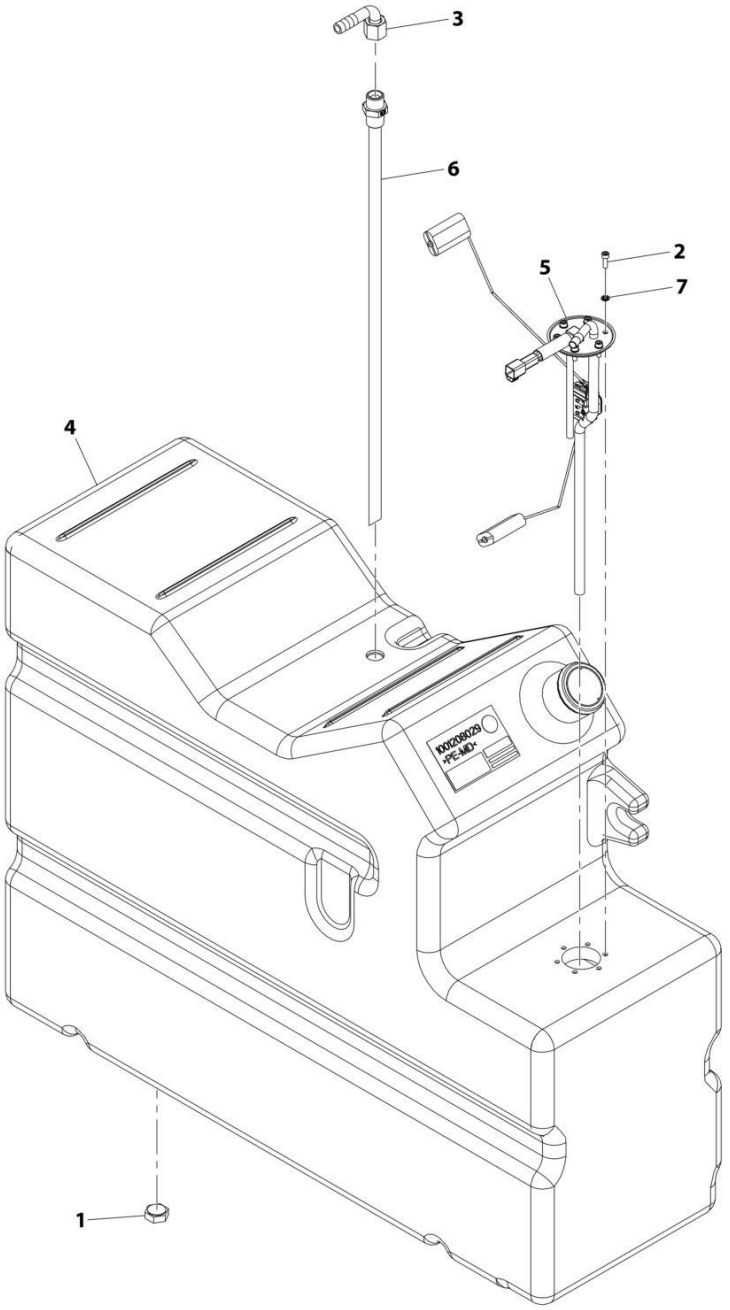

ART_1001208028-C

FIGURE 1-11. FUEL TANK ASSEMBLY

ITEM	PART NUMBER	QTY	DESCRIPTION	REV
	1001208028	Ref	Fuel Tank Assembly	C
1	2220239	1	Plug	
2	4031607	6	Bolt, M5X16	
3	1001172693	1	Fitting, 90	
4	1001208029	1	Tank, Fuel	
5	1001222188	1	Sender, Fuel Level	
6	1001241324	1	Pipe, Fuel Supply	
7	1001222190	6	Washer	

FIGURE 1-12. REMOTE FILL INSTALLATION

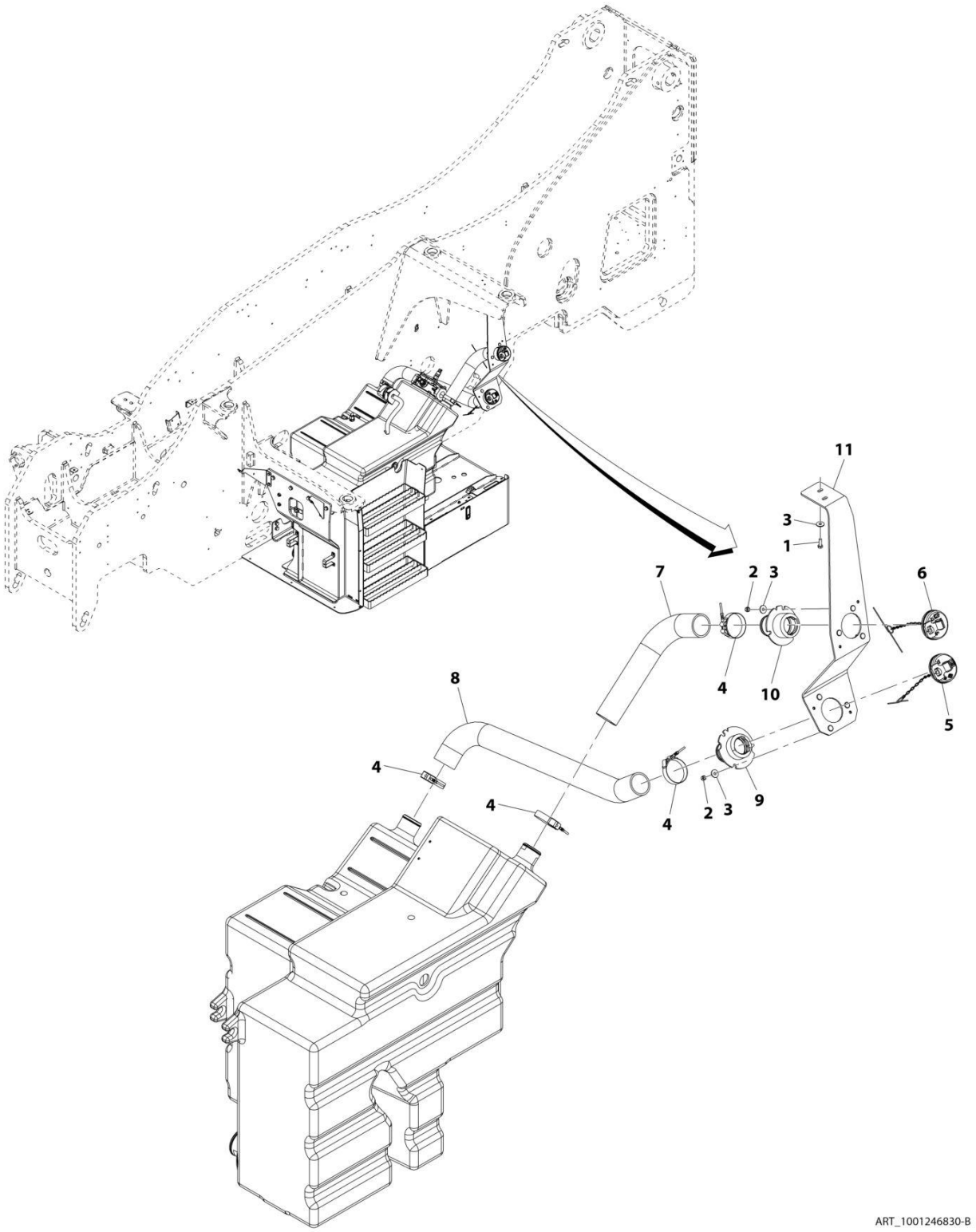

FIGURE 1-12. REMOTE FILL INSTALLATION

ITEM	PART NUMBER	QTY	DESCRIPTION	REV
	1001246830	Ref	Remote Fill Installation	B
1	0700812	2	Bolt, M8X25	
2	3290805	6	Nut, M8X1.25	
3	4811902	8	Washer, M8	
4	1001014233	4	Clamp	
5	1001194980	1	Cap	
6	1001194981	1	Cap, Hydraulic	
7	1001207947	1	Filter, Hose	
8	1001208031	1	Filler, Pipe	
9	1001244443	1	Adapter	
10	1001244459	1	Adapter	
11	1001244517	1	Support, Filler	

FIGURE 1-13. WHEEL CHOCK INSTALLATION

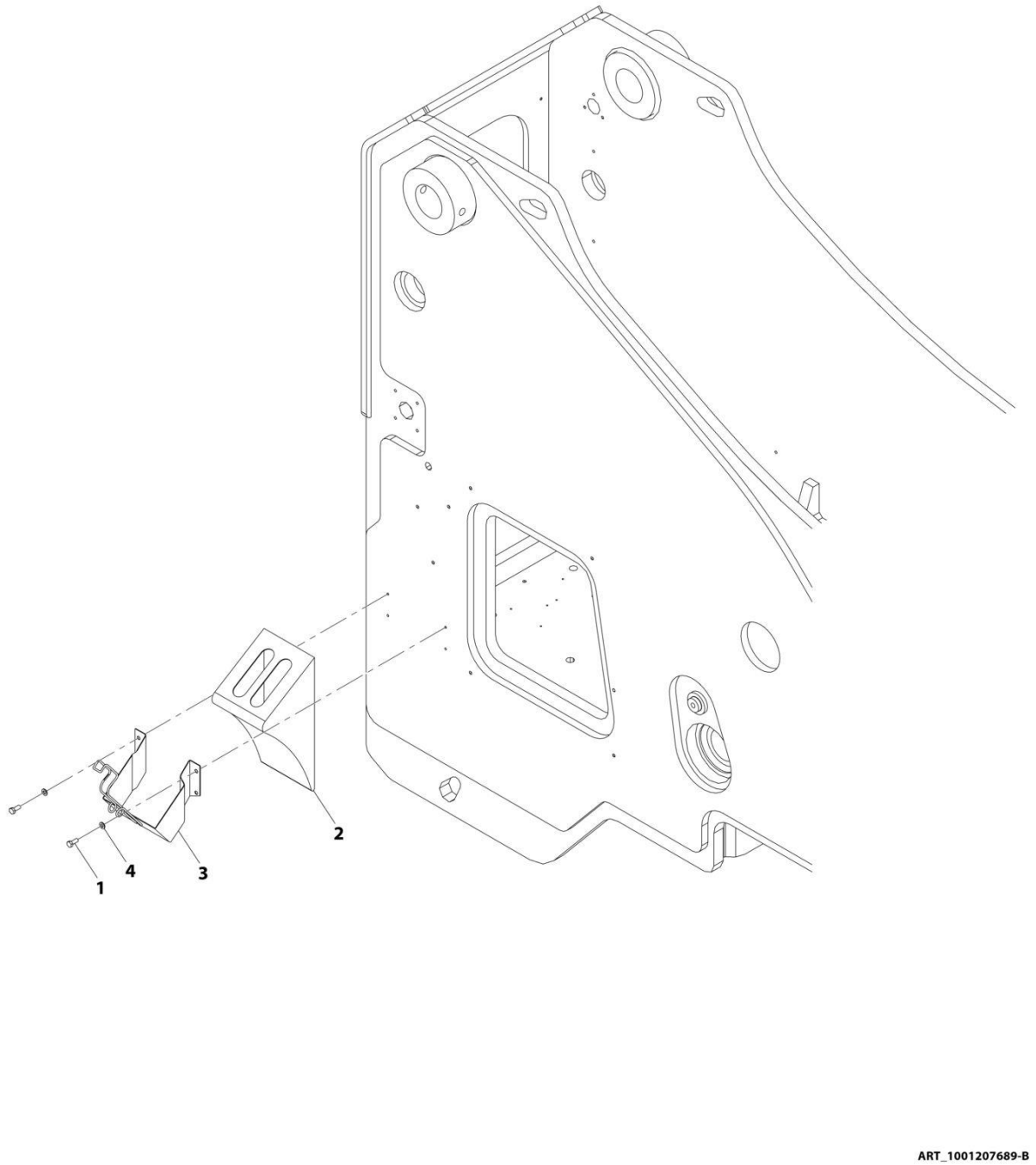

FIGURE 1-13. WHEEL CHOCK INSTALLATION

ITEM	PART NUMBER	QTY	DESCRIPTION	REV
	1001207689	Ref	Wheel Chock Installation	B
1	0760810	8	Bolt, M8X20	
2	806253	2	Wedge	
3	806264	2	Holder, Wedge	
4	4811900	8	Washer, M8	

FIGURE 1-14. PAD LOCK

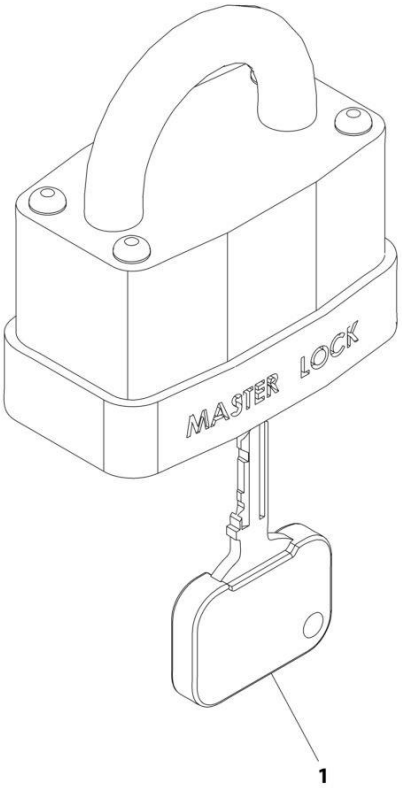

ART_1001102157-A

FIGURE 1-14. PAD LOCK

ITEM	PART NUMBER	QTY	DESCRIPTION	REV
	1001102157	Ref	Pad Lock	A
1	8342813	1	Key	

FIGURE 1-15. BOOM PROP INSTALLATION

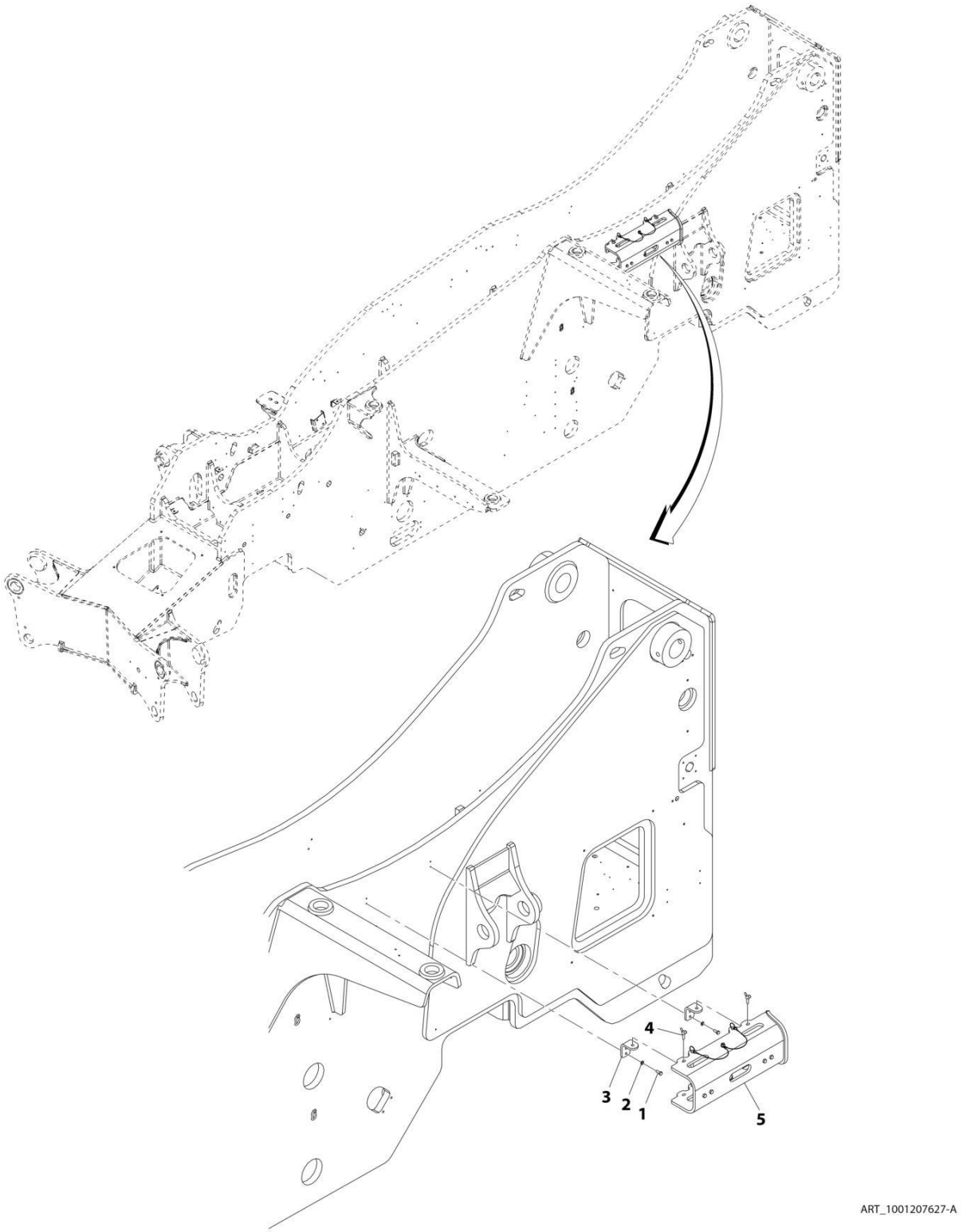

FIGURE 1-15. BOOM PROP INSTALLATION

ITEM	PART NUMBER	QTY	DESCRIPTION	REV
	1001207627	Ref	Boom Prop Installation	A
1	0760810	4	Bolt, M8X20	
2	4811900	4	Washer, M8	
3	1001193887	2	Bracket	
4	1001228860	2	Bolt, Wing M8X30	
5	1001248853	1	Bracket, Boom Prop	

FIGURE 1-16. GROMMETS INSTALLATION

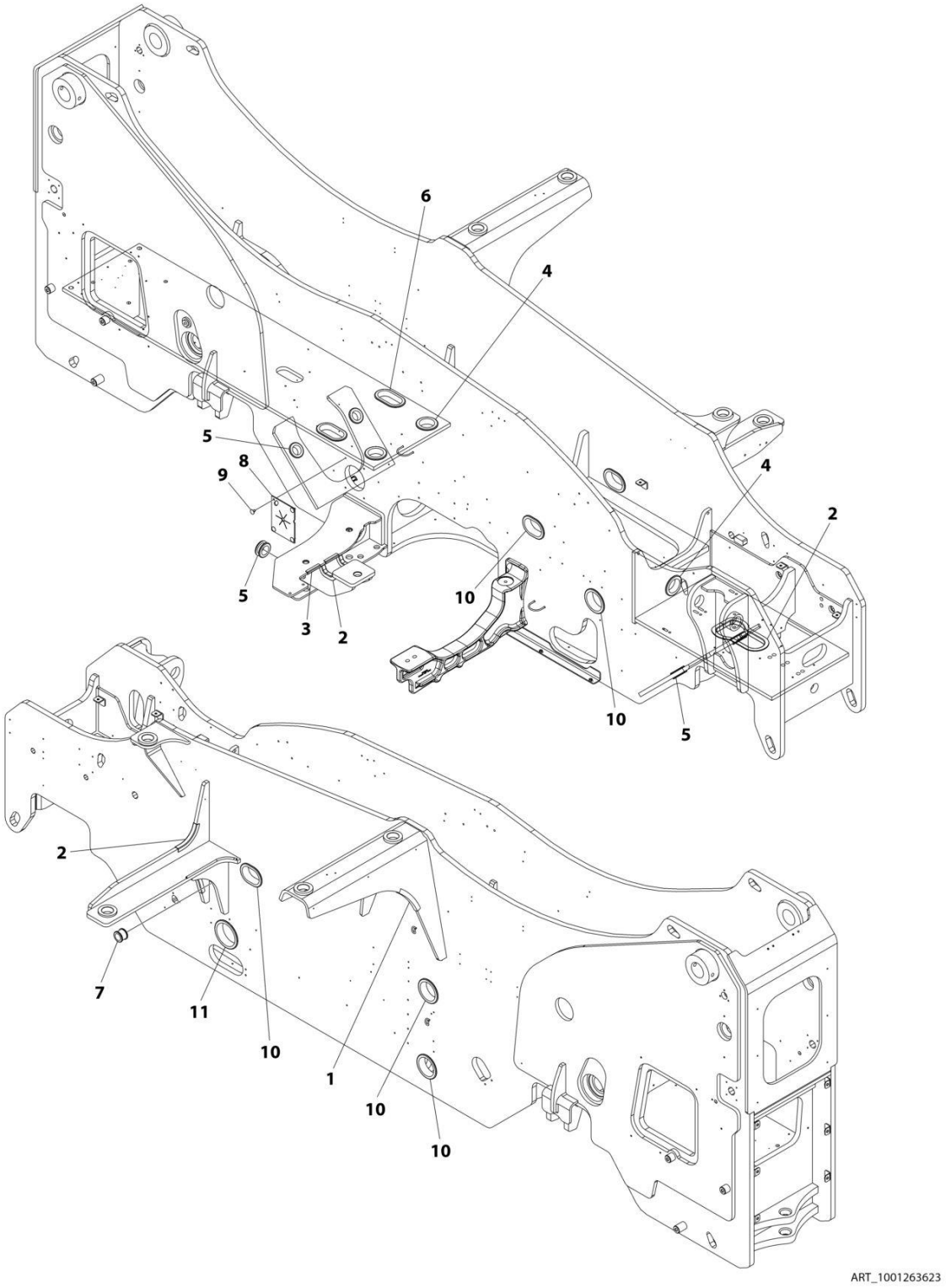

FIGURE 1-16. GROMMETS INSTALLATION

ITEM	PART NUMBER	QTY	DESCRIPTION	REV
	1001263623	Ref	GROMMETS INSTALLATION	A
1	4060918	181 mm	Trim	
2	4060919	1448 mm	Trim	
3	90206202	180 mm	Trim Lock	
4	1001028291	3	Grommet	
5	1001028308	5	Grommet, Rubber	
6	1001028377	2	Grommet, Rubber	
7	1001028400	1	Grommet, Rubber	
8	1001175347	1	Rubber, Grommet Over Frame Hole	
9	1001180306	4	Screw	
10	1001241314	5	Grommet, Rubber	
11	1001241315	1	Grommet, Rubber	

FIGURE 1-17. MIRROR INSTALLATION

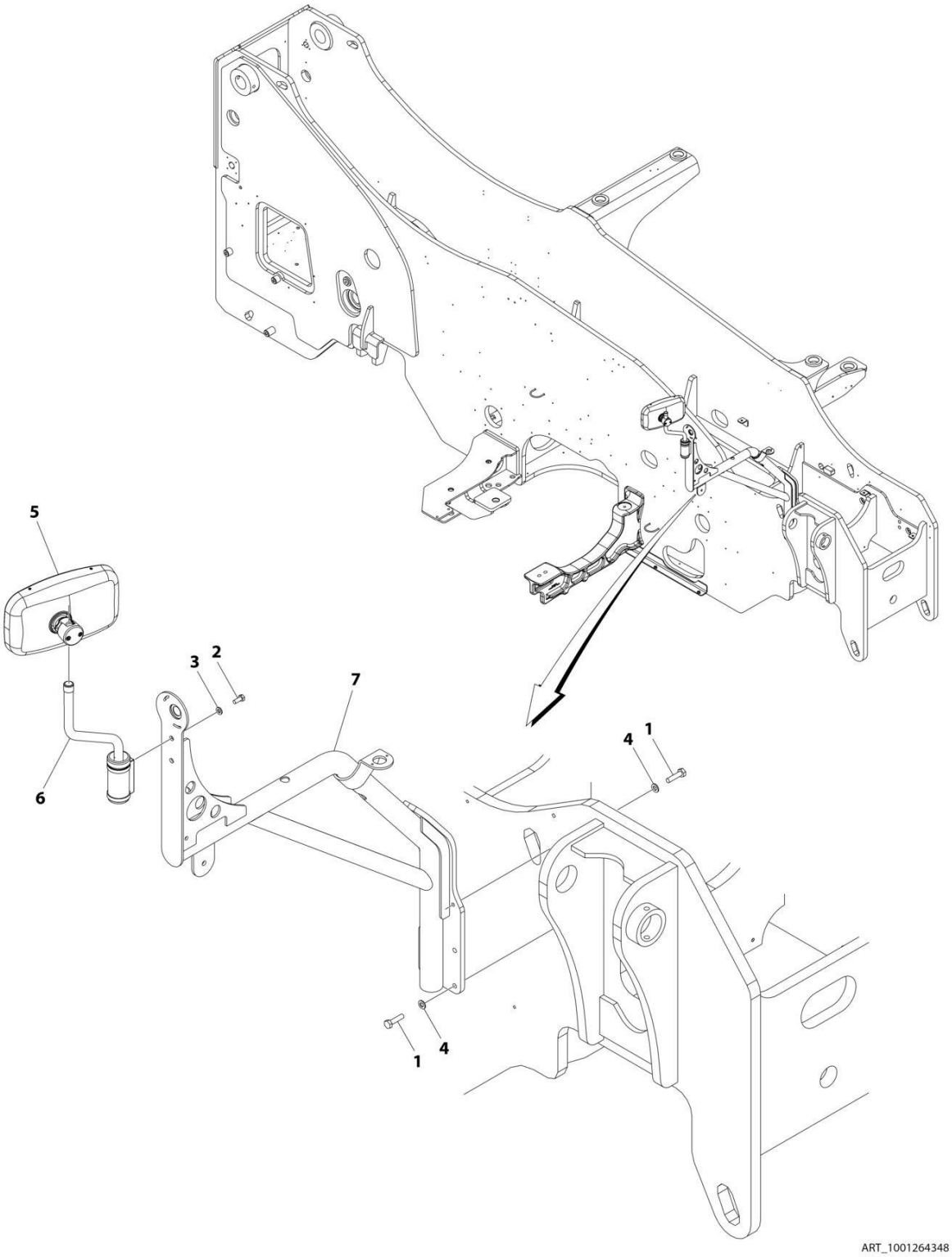

FIGURE 1-17. MIRROR INSTALLATION

ITEM	PART NUMBER	QTY	DESCRIPTION	REV
	1001264348	Ref	MIRROR INSTALLATION	B
1	0701016	6	Bolt M10 x 40	
2	0760810	2	Bolt M8 x 20	
3	4811900	2	Washer M8	
4	4812000	6	Washer M10	
5	1001191635	1	Mirror, Convex	
6	1001209346	1	Bracket	
7	1001265347	1	Bracket, Camera	

FIGURE 1-18. RIGHT SIDE CAMERA INSTALLATION

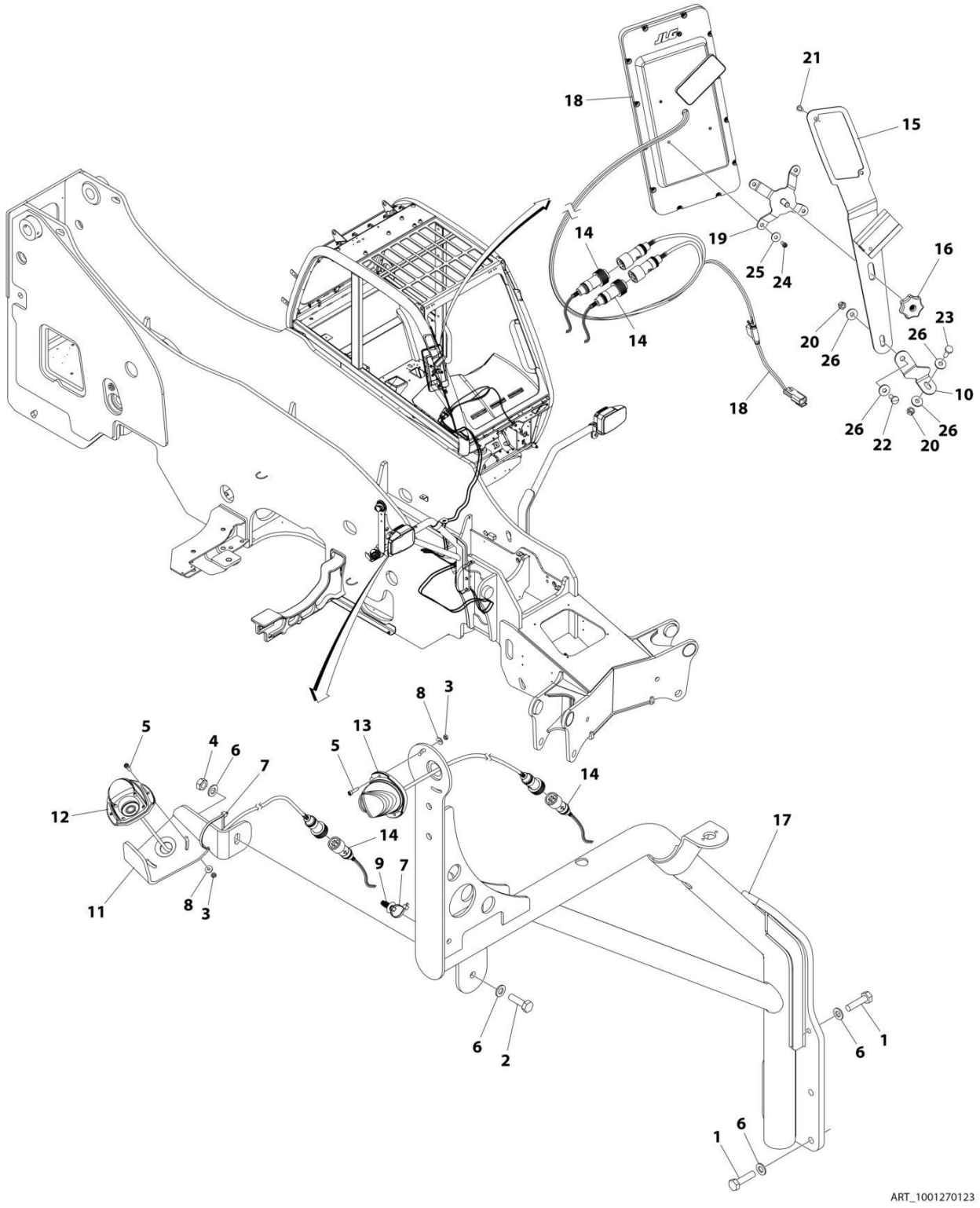

FIGURE 1-18. RIGHT SIDE CAMERA INSTALLATION

ITEM	PART NUMBER	QTY	DESCRIPTION	REV
	1001270123	Ref	CAMERA INSTALLATION	A
1	0701016	6	Bolt M10 x 40	
2	0761015	1	Bolt M10 x 35	
3	3290401	4	Nut M4 x 0.7	
4	3291001	1	Nut M10 x 1.5	
5	4031507	4	Bolt M4 x 16	
6	4812000	8	Washer M10	
7	1001008559	2	Tie-Strap	
8	1001091102	4	Washer M4	
9	1001202986	1	Strap, Push Mount	
10	1001260274	1	Plate, Display Bracket	
11	1001260580	1	Plate, Camera Bracket	
12	1001260685	1	Camera, Normal View	
13	1001260686	1	Camera, Mirror View	
14	1001260687	2	Cable, Extension	
15	1001260701	1	Bracket, Display	
16	1001265007	1	Knob, Display	
17	1001265347	1	Bracket, Camera	
18	1001265544	1	Display	
18	70031049	1	Control, Remote (Not Shown)	
19	1001271256	1	Mount, Display	
20	3290605001	2	Nut M6 x 1	
21	4010410002	2	Screw	
22	4010608002	1	Screw	
23	4010610002	1	Screw M6 x 20	
24	4031505001	4	Bolt M4 x 10	
25	4811602001	4	Washer M5	
26	4811702001	4	Washer M6	

SECTION 2 - BOOM

FIGURE 2-1. BOOM INSTALLATION

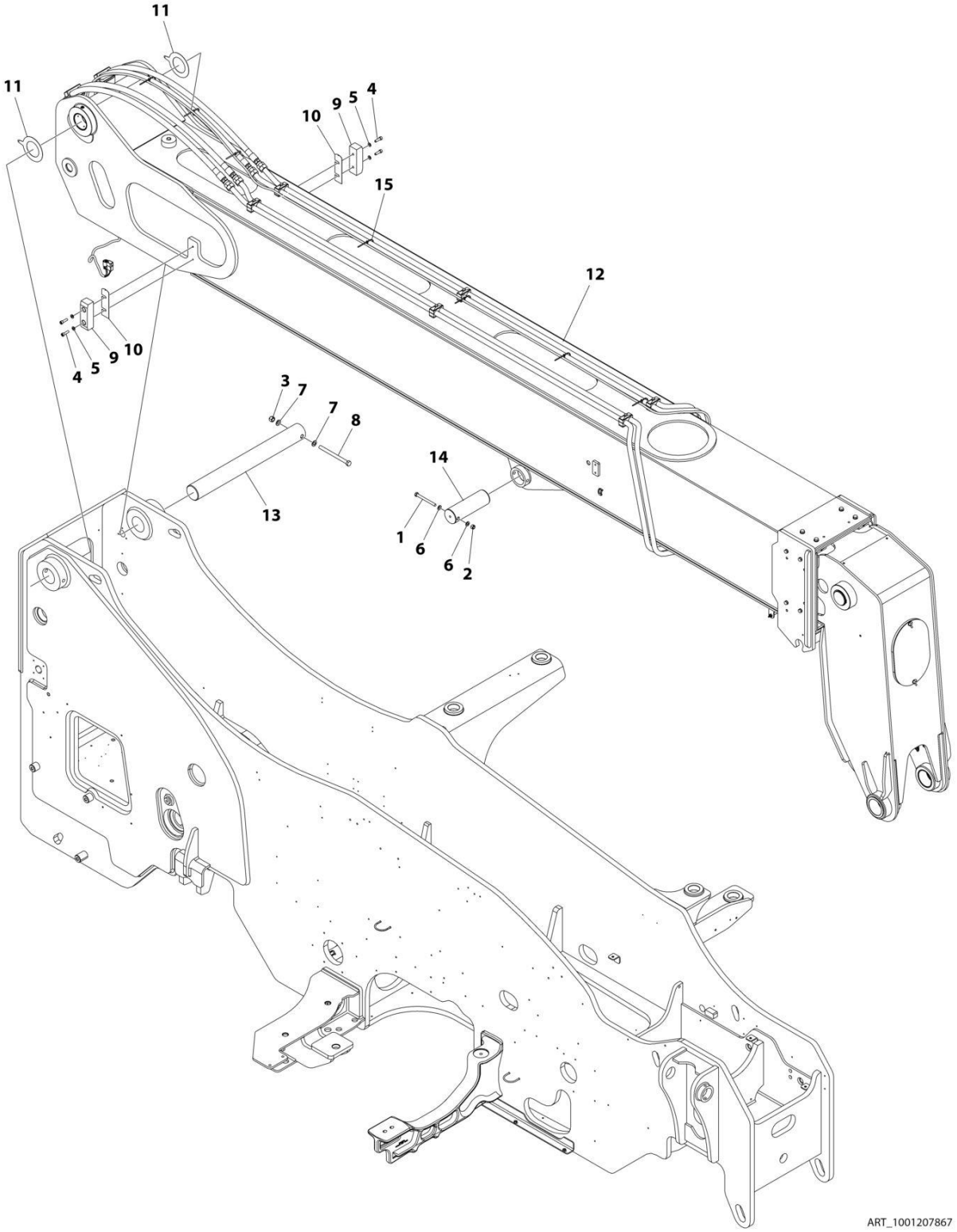

FIGURE 2-1. BOOM INSTALLATION

ITEM	PART NUMBER	QTY	DESCRIPTION	REV
	1001207867	Ref	BOOM ASSEMBLY INSTALLATION	C
1	0711230	1	Bolt M12 x 130	
2	3291205	1	Nut M12	
3	3291605	1	Nut M16	
4	4032011	4	Bolt M10 x 35	
5	4812000	4	Washer M10	
6	4812100	2	Washer M12	
7	4812300	2	Washer M16	
8	1001091951	1	Bolt M16 x 200	
9	1001195655	2	Pad	
10	1001219905	AR	Shim	
11	1001219953	AR	Shim, Boom Pivot	
12	1001232797	1	Boom Assembly (See Separate Breakdown in this Section)	
13	1001232801	1	Pin, Boom Pivot	
14	1001242105	1	Pin, Lift Cylinder	
15	471678	AR	Tie, Strap	

FIGURE 2-2. BOOM ASSEMBLY

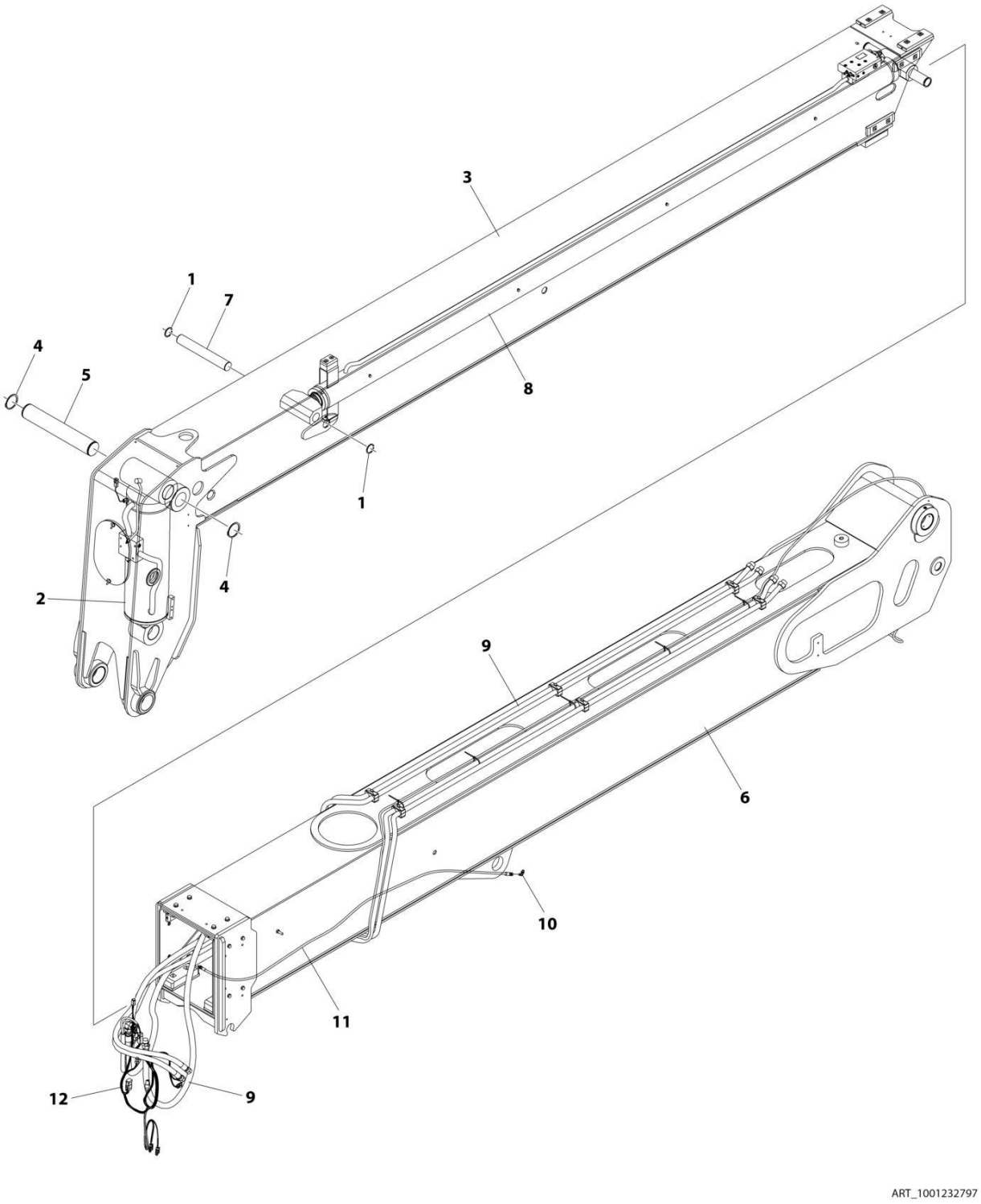

FIGURE 2-2. BOOM ASSEMBLY

ITEM	PART NUMBER	QTY	DESCRIPTION	REV
	1001232797	Ref	BOOM ASSEMBLY	B
1	314689	2	Ring, Retaining M50	
2	1001174983	1	Cylinder, Tilt (See Separate Breakdown in HYDRAULIC COMPONENTS Section)	
3	1001207172	1	Fly Boom Section Assembly (See Separate Breakdown in this Section)	
4	1001232786	2	Ring, Retaining	
5	1001232796	1	Pin	
6	1001232798	1	Base Boom Section Assembly (See Separate Breakdown in this Section)	
7	1001232804	1	Pin	
8	1001257983	1	Cylinder Installation - Extend/Retract (See Separate Breakdown in HYDRAULIC COMPONENTS Section)	
9	1001257986	1	Installation, Boom Hydraulic (See Separate Breakdown in HYDRAULIC CIRCUITS Section)	
10	8770215	1	Elbow, 90	
11	1001244542	1	Hose Assembly	
12	1001268360	1	Harness, Basic Platform (See Separate Breakdown in ELECTRICAL Section)	

FIGURE 2-3. BASE BOOM SECTION ASSEMBLY

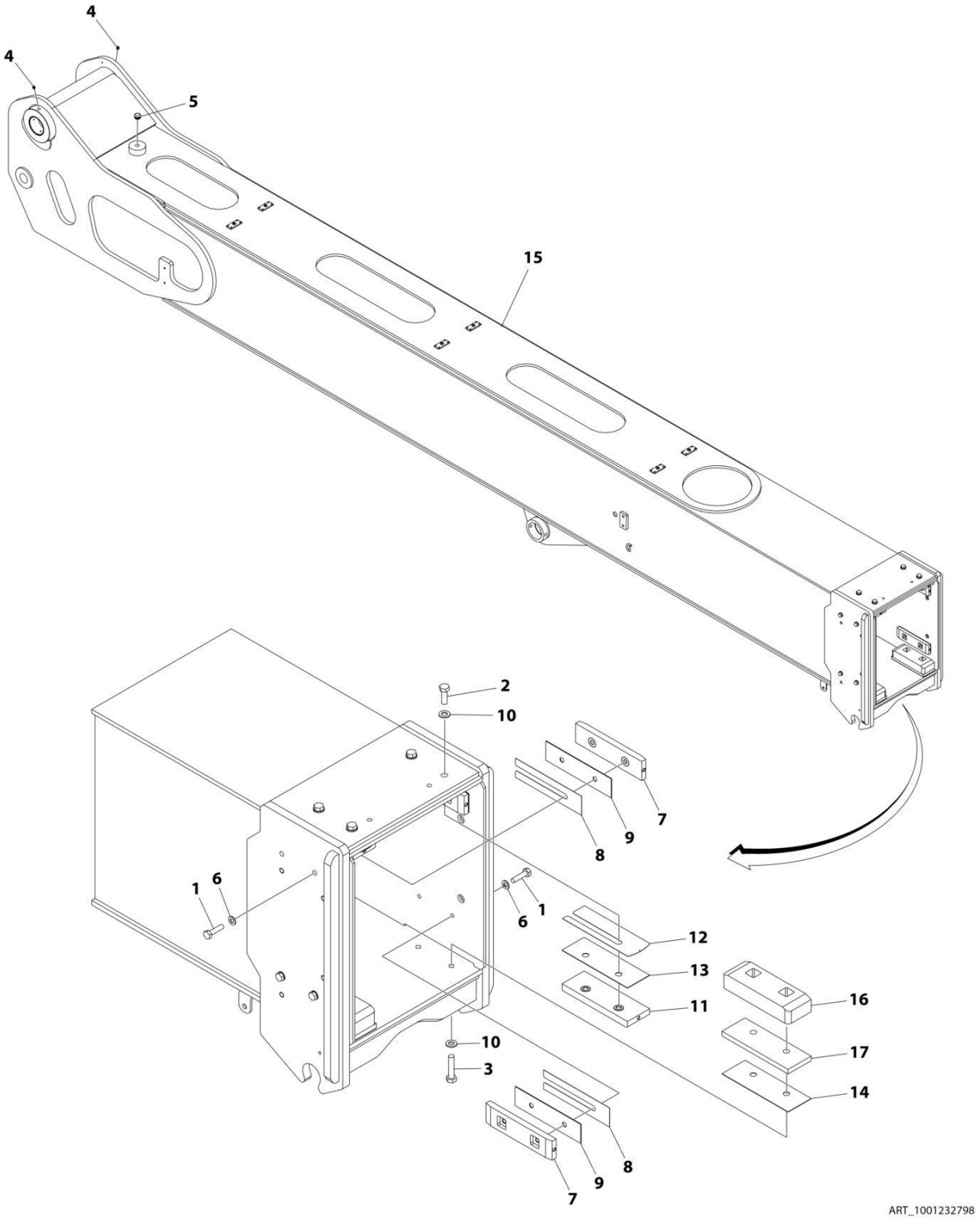

FIGURE 2-3. BASE BOOM SECTION ASSEMBLY

ITEM	PART NUMBER	QTY	DESCRIPTION	REV
	1001232798	Ref	BASE BOOM SECTION ASSEMBLY	B
1	0711016	8	Bolt M10 x 40	
2	0711215	4	Bolt M12 x 35	
3	0711219	4	Bolt M12 x 55	
4	2160016	2	Fitting, Grease	
5	3520193	1	Plug	
6	4812000	AR	Washer M10	
7	8002200	4	Pad	
8	8008640	AR	Shim	
9	1001003031	4	Shim	
10	1001125117	AR	Washer M12	
11	1001227334	2	Wear Pad	
12	1001195194	AR	Shim	
13	1001195737	2	Spacer	
14	1001201269	2	Spacer	
15	1001206111	1	Boom, Base	
16	1001227337	2	Wear Pad	
17	1001255087	2	Spacer	

FIGURE 2-4. FLY BOOM SECTION ASSEMBLY

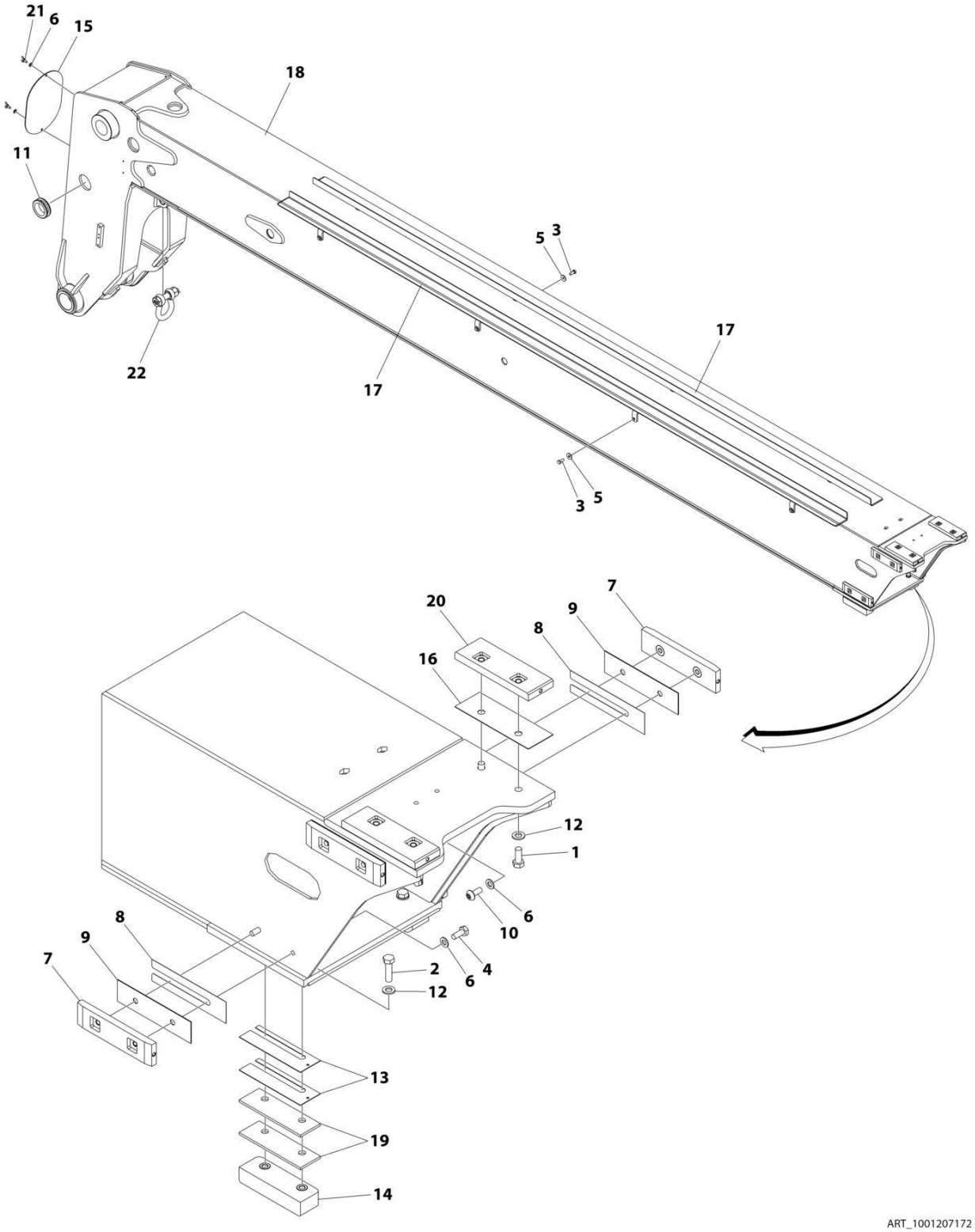

FIGURE 2-4. FLY BOOM SECTION ASSEMBLY

ITEM	PART NUMBER	QTY	DESCRIPTION	REV
	1001207172	Ref	BOOM ASSEMBLY INSTALLATION	B
1	0711214	4	Bolt M12 x 30	
2	0711217	4	Bolt M12 x 45	
3	0760810	8	Bolt M8 x 20	
4	0771012	4	Bolt M10 x 25	
5	4811902	8	Washer M8	
6	4812000	AR	Washer M10	
7	8002200	4	Pad	
8	8008640	AR	Shim	
9	1001003031	4	Shim	
10	1001009325	4	Screw M10 x 25	
11	1001028415	1	Grommet	
12	1001125117	AR	Washer M12	
13	1001163104	AR	Shim	
14	1001165175	2	Pad	
15	1001191789	1	Plate	
16	1001195737	2	Spacer	
17	1001203987	2	Bracket	
18	1001206110	1	Fly Boom Assembly	
19	1001215464	4	Spacer	
20	1001227334	2	Pad	
21	1001250708	2	Bolt M8 x 20	
22	1001254991	1	Clevis Bolt	

FIGURE 2-5. ATTACH COUPLER INSTALLATION (MANUAL)

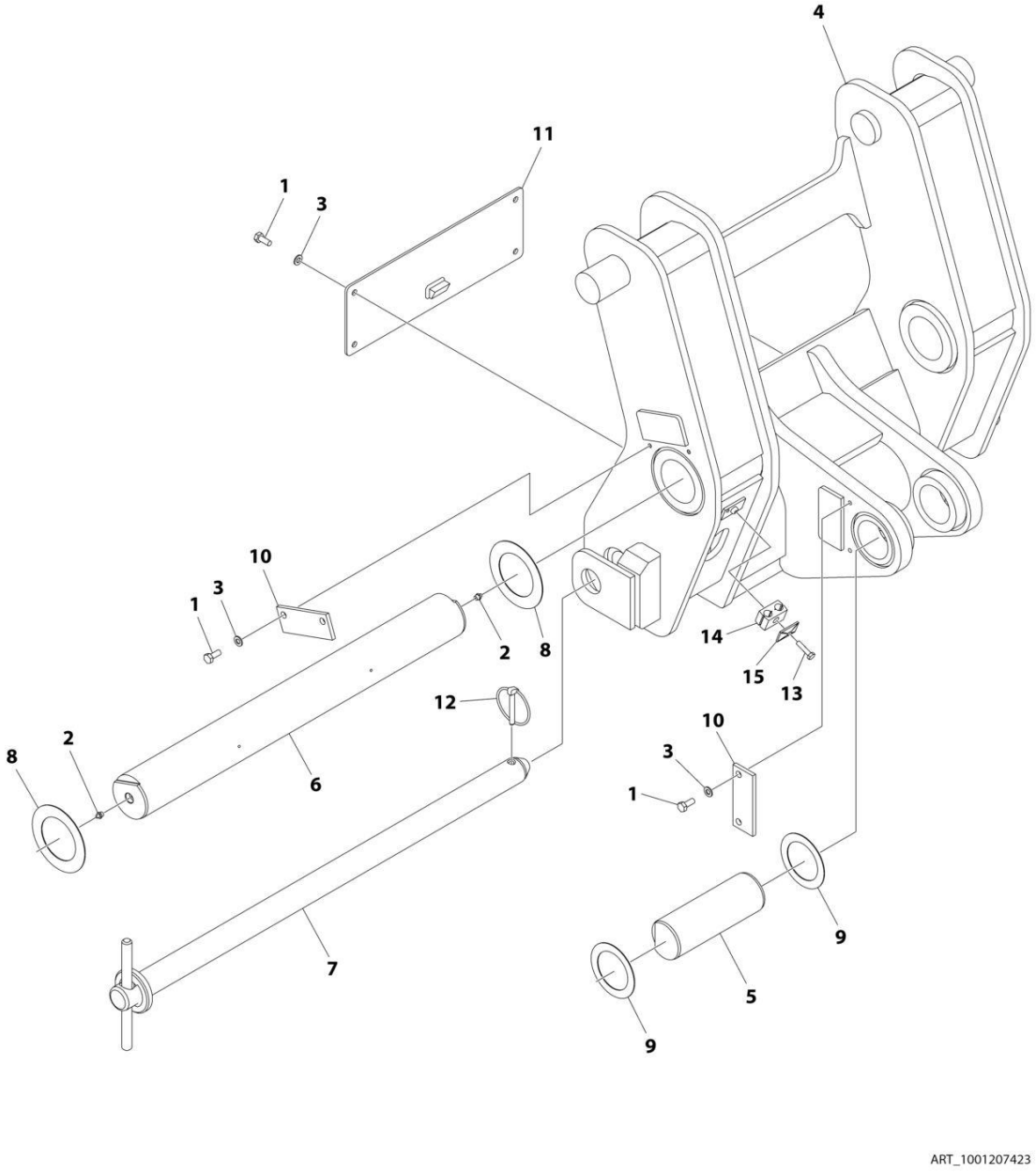

FIGURE 2-5. ATTACH COUPLER INSTALLATION (MANUAL)

ITEM	PART NUMBER	QTY	DESCRIPTION	REV
	1001207423	Ref	COUPLER INSTALLATION (MANUAL)	B
1	0761012	8	Bolt M10 x 25	
2	2160016	2	Fitting, Grease	
3	4812000	8	Washer M10	
4	1001207425	1	Carriage	
5	1001207428	1	Pin, Tilt	
6	1001207429	1	Pin, Coupler	
7	1001207430	1	Pin, Coupler	
8	1001207431	AR	Shim	
9	1001207432	AR	Shim	
10	1001210326	2	Plate, Pin Retention	
11	1001258766	1	Plate, Front Cover	
12	1001003803	1	Pin	
13	0760815	1	Bolt M8 x 35	
14	8769122	1	Clamp	
15	8769123	1	Cover Plate	

FIGURE 2-6. ATTACH COUPLER INSTALLATION (HYDRAULIC)

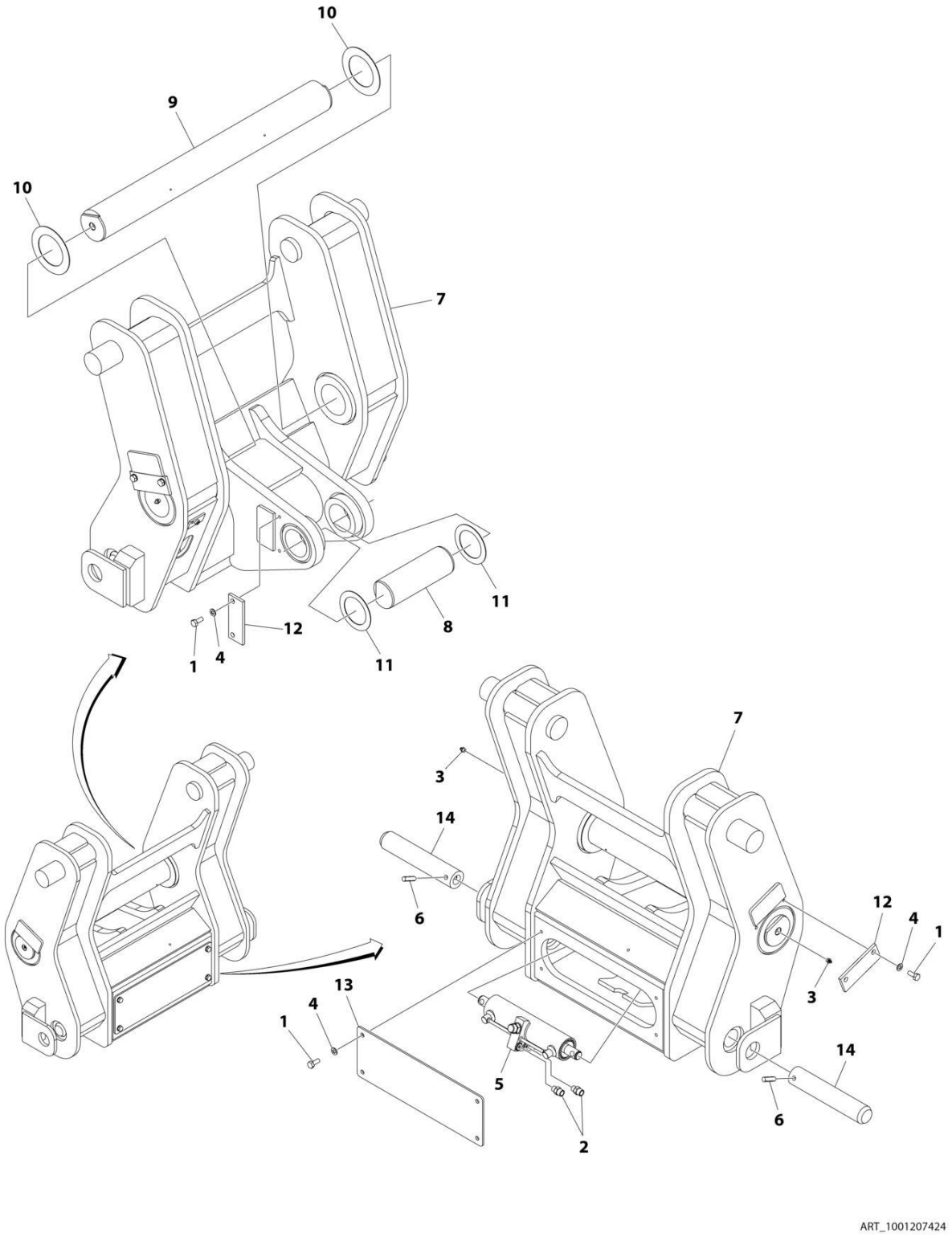

FIGURE 2-6. ATTACH COUPLER INSTALLATION (HYDRAULIC)

ITEM	PART NUMBER	QTY	DESCRIPTION	REV
	1001207424	Ref	COUPLER INSTALLATION (HYDRAULIC)	A
1	0761012	8	Bolt M10 x 25	
2	2110606	2	Fitting, Straight ORFS	
3	2160016	2	Fitting, Grease	
4	4812000	8	Washer M10	
5	1001145391	1	Assembly, Coupler Locking Cylinder (See Separate Breakdown in this Section)	
6	1001184610	2	Pin	
7	1001207425	1	Carriage	
8	1001207428	1	Pin, Tilt	
9	1001207429	1	Pin, Coupler	
10	1001207431	AR	Shim	
11	1001207432	AR	Shim	
12	1001210326	2	Plate, Pin Retention	
13	1001258766	1	Plate, Front Cover	
14	1001258767	2	Pin	

FIGURE 2-7. QUICK COUPLER INSTALLATION

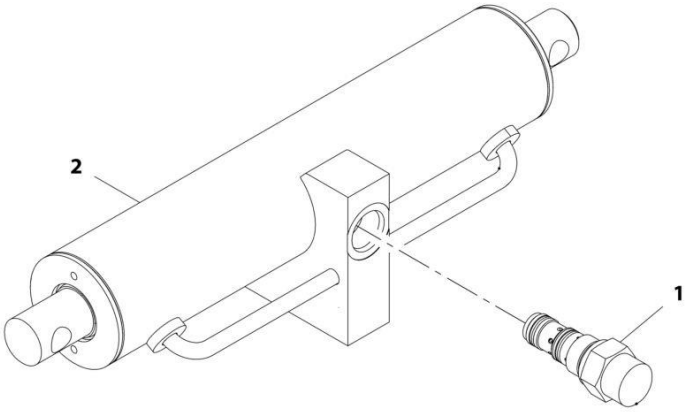

ART_1001145391-A

FIGURE 2-7. QUICK COUPLER INSTALLATION

ITEM	PART NUMBER	QTY	DESCRIPTION	REV
	1001145391	Ref	Coupler Locking Cylinder Assembly	A
1	1001007056	1	Valve, Check	
2	1001145390	1	Cylinder, Coupler Locking (See Separate Breakdown in Hydraulic Components Section)	

FIGURE 2-8. MANUAL COUPLER PIN HOLDER INSTALLATION

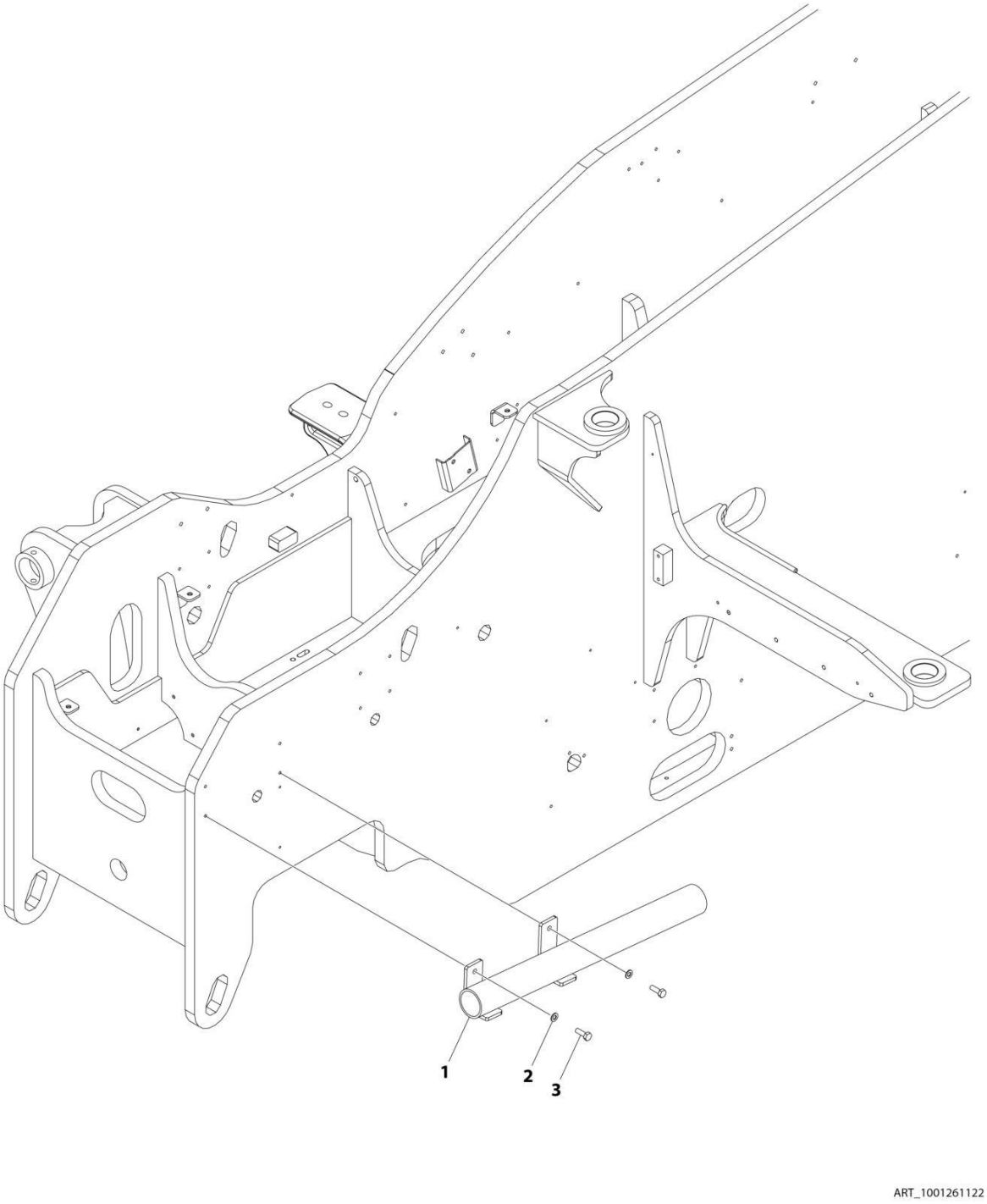

FIGURE 2-8. MANUAL COUPLER PIN HOLDER INSTALLATION

ITEM	PART NUMBER	QTY	DESCRIPTION	REV
	1001261122	Ref	MANUAL COUPLER PIN HOLDER INSTALLATION	A
1	1001261096	1	Bracket, Pin Holder	
2	4812000	2	Washer M10	
3	0701014	2	Bolt M10 x 30	

FIGURE 2-9. BOOM ANGLE INDICATOR INSTALLATION

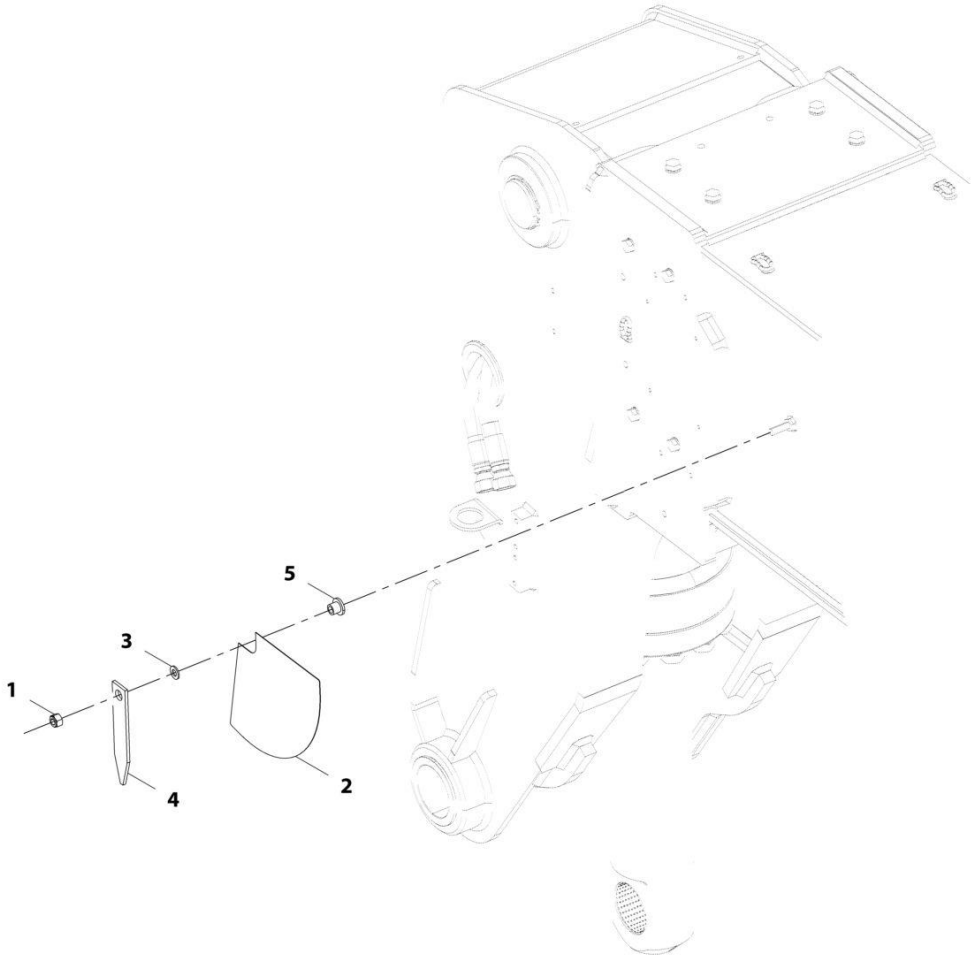

ART_1001192364-A

FIGURE 2-9. BOOM ANGLE INDICATOR INSTALLATION

ITEM	PART NUMBER	QTY	DESCRIPTION	REV
	1001192364	Ref	Boom Angle Indicator Installation	A
1	3291005	1	Nut, Lock M10X1.5	
2	4105262	1	Decal, Boom Angle Indicator	
3	4812000	1	Washer, M10	
4	1001098769	1	Plate, Boom Angle Indicator	
5	1001171808	1	Spacer	

FIGURE 2-10. BOOM BRUSHES INSTALLATION

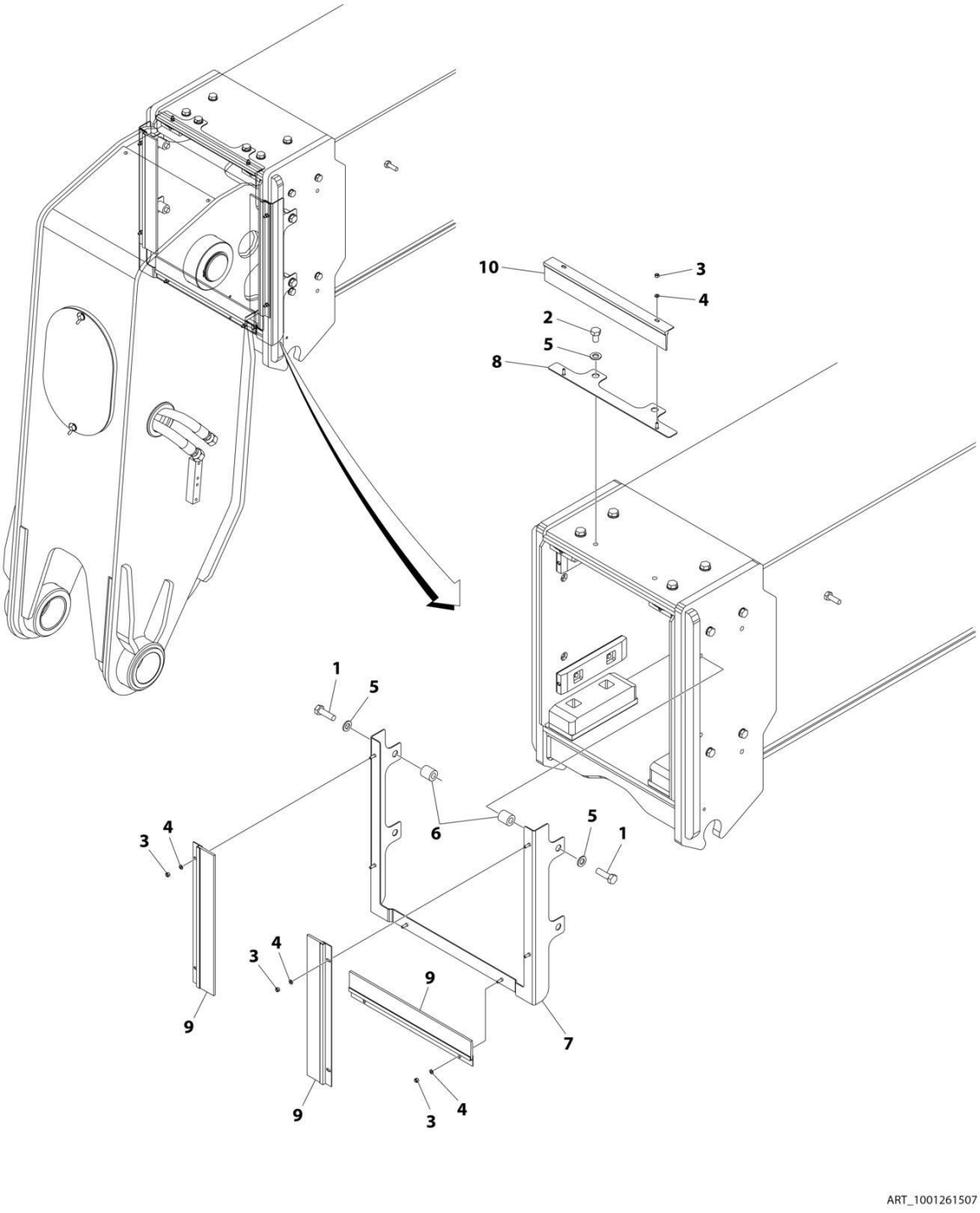

FIGURE 2-10. BOOM BRUSHES INSTALLATION

ITEM	PART NUMBER	QTY	DESCRIPTION	REV
	1001261507	Ref	BOOM BRUSHES INSALLATION	A
1	0701216	4	Bolt M12 x 40	
2	0761210	2	Bolt M12 x 20	
3	3290505	8	Nut M5 Grd8	
4	4811600	8	Washer M5	
5	1001125117	6	Washer M12	
6	1001220286	4	Tube	
7	1001261508	1	Bracket	
8	1001261509	1	Bracket	
9	1001261510	3	Brush	
10	1001261511	1	Brush	

SECTION 3 - ATTACHMENTS

FIGURE 3-1. PLATFORM DOCKING STATION KIT

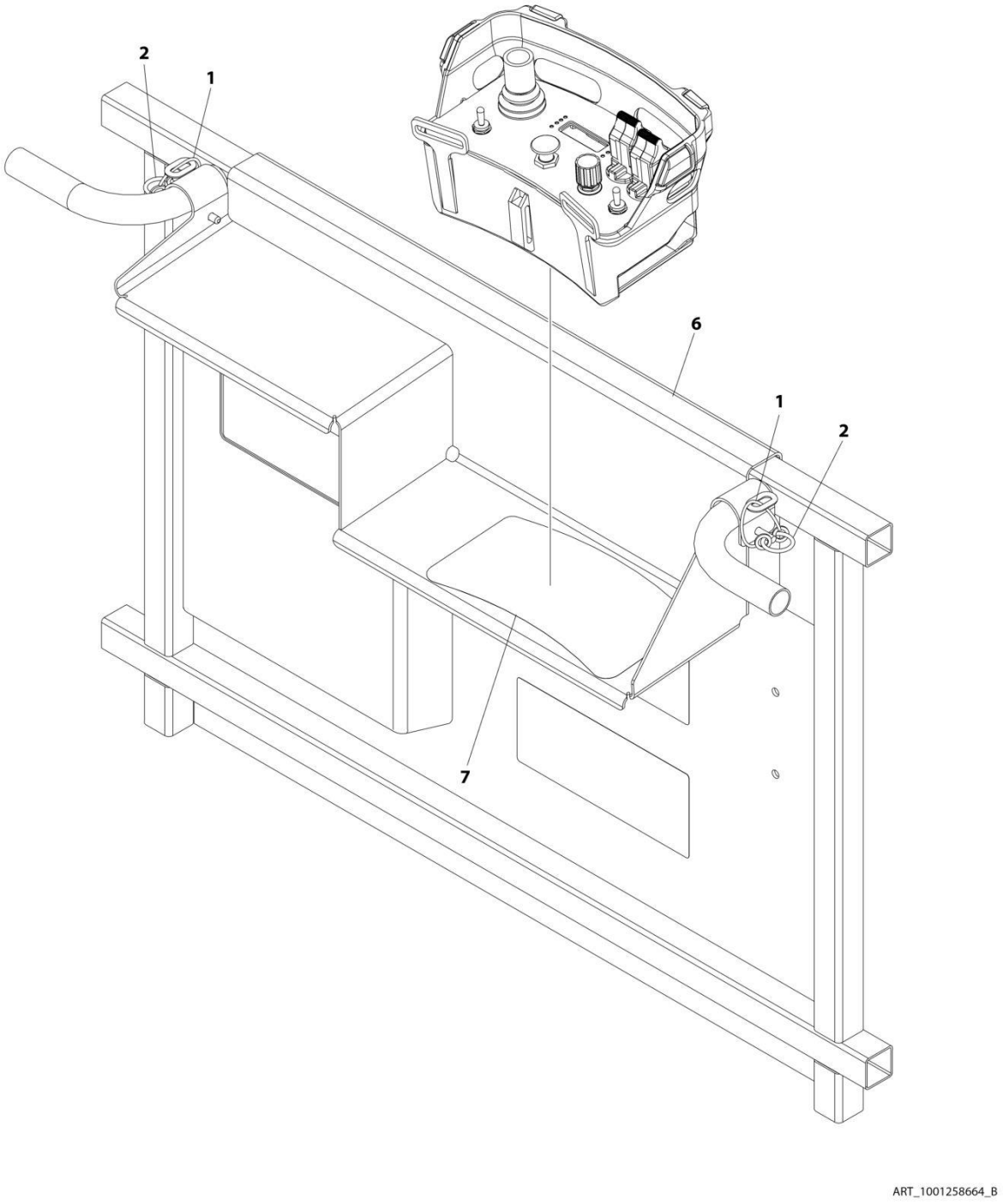

FIGURE 3-1. PLATFORM DOCKING STATION KIT

ITEM	PART NUMBER	QTY	DESCRIPTION	REV
	1001258664	Ref	PLATFORM DOCKING STATION KIT	B
1	1060379	2	Cable, Lanyard	
2	3422661	2	Pin, Quick Release	
6	1001259214	1	Bracket, Control Mount Weld	
7	1001259225	1	Decal, Remote Control	

FIGURE 3-2. CARRIAGE ASSEMBLY (60 INCH)

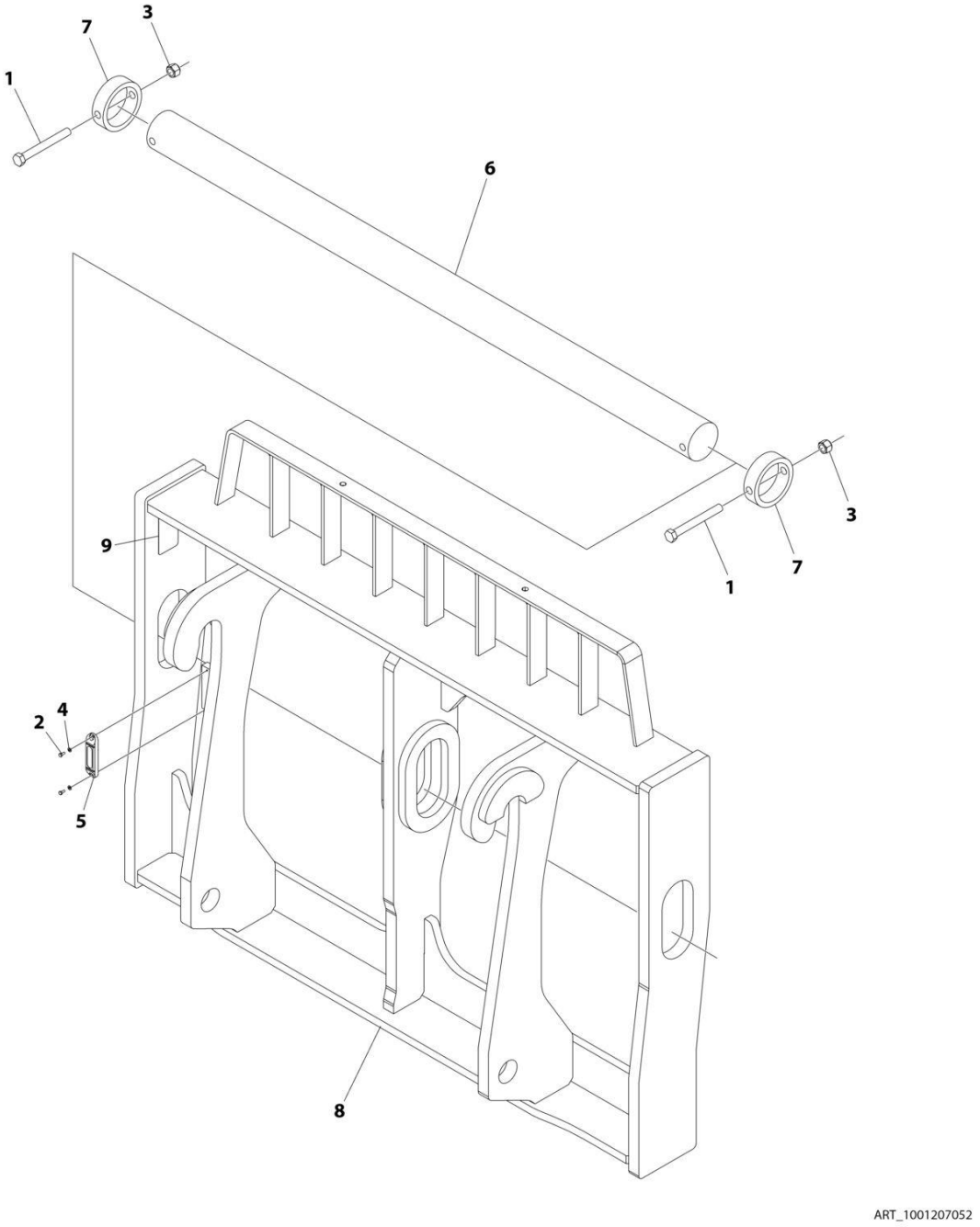

FIGURE 3-2. CARRIAGE ASSEMBLY (60 INCH)

ITEM	PART NUMBER	QTY	DESCRIPTION	REV
	1001207052	Ref	CARRIAGE ASSEMBLY (60 INCH)	D
1	0701631	2	Bolt M16 x 140	
2	0760405	2	Bolt M4 x 10	
3	3291605	2	Nut M16	
4	4811400	2	Washer M4	
5	1001227670	1	Tag, RFID	
6	See Note	NSS	Shaft, Carriage (Note: Purchase Complete Assembly)	
7	1001259542	2	Stop, Carriage Shaft	
8	See Note	NSS	Carriage (Note: Purchase, Shaft Complete Assembly)	
9	See Note	NSS	SN Plate (Note:Stamped Part - Not Available for Purchase)	

FIGURE 3-3. CARRIAGE ASSEMBLY (72 INCH)

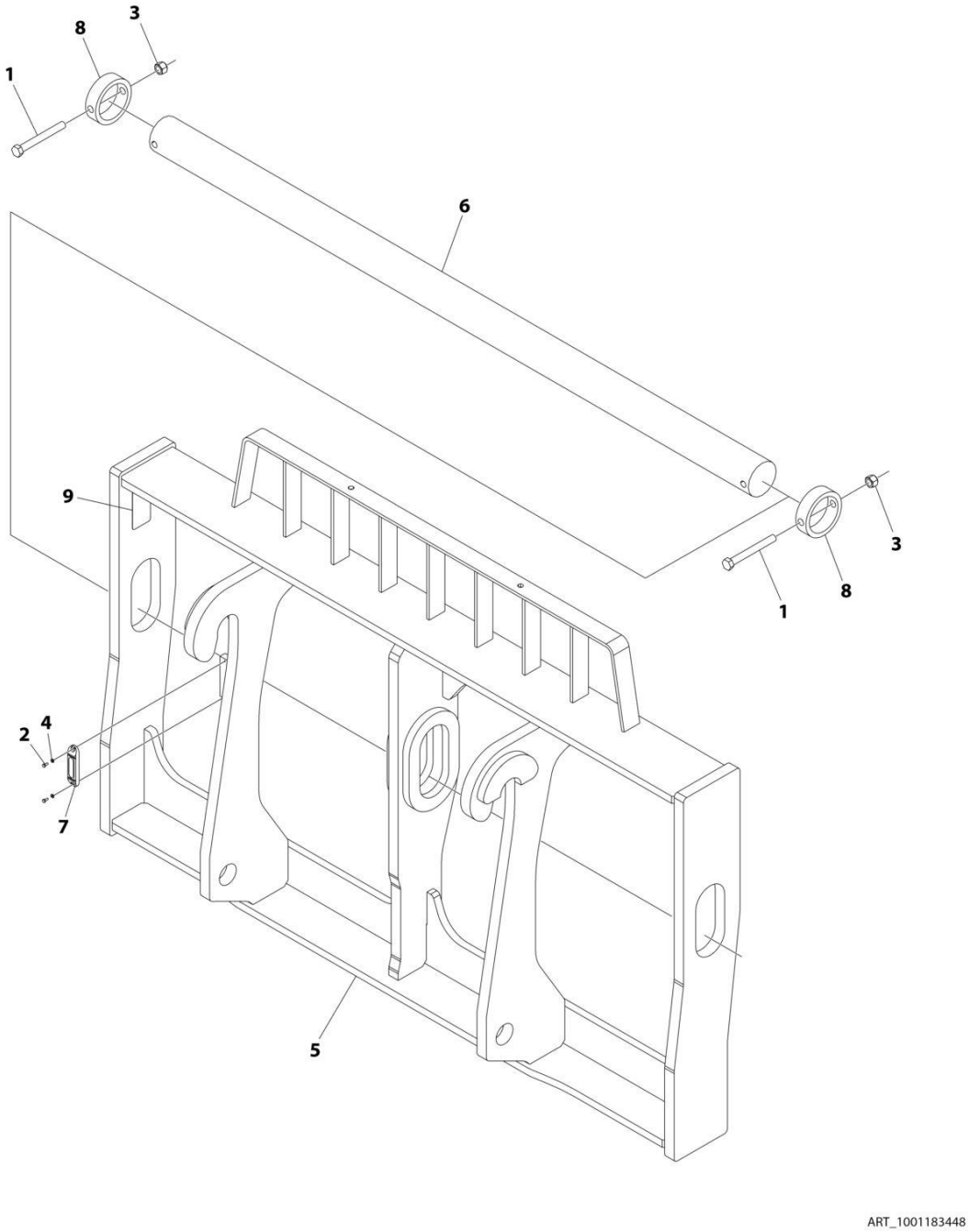

FIGURE 3-3. CARRIAGE ASSEMBLY (72 INCH)

ITEM	PART NUMBER	QTY	DESCRIPTION	REV
	1001183448	Ref	CARRIAGE ASSEMBLY (72 INCH)	D
1	0701631	2	Bolt M16 x 140	
2	0760405	2	Bolt M4 x 10	
3	3291605	2	Nut M16	
4	4811400	2	Washer M4	
5	See Note	NSS	Carriage (Note: Purchase Complete Assembly)	
6	See Note	NSS	Shaft, Carriage (Note: Purchase Complete Assembly)	
7	1001227670	1	Tag, RFID	
8	1001259542	2	Stop, Carriage Shaft	
9	See Note	NSS	SN Plate (Note:Stamped Part - Not Available for Purchase)	

FIGURE 3-4. CARRIAGE ASSEMBLY (87 INCH)

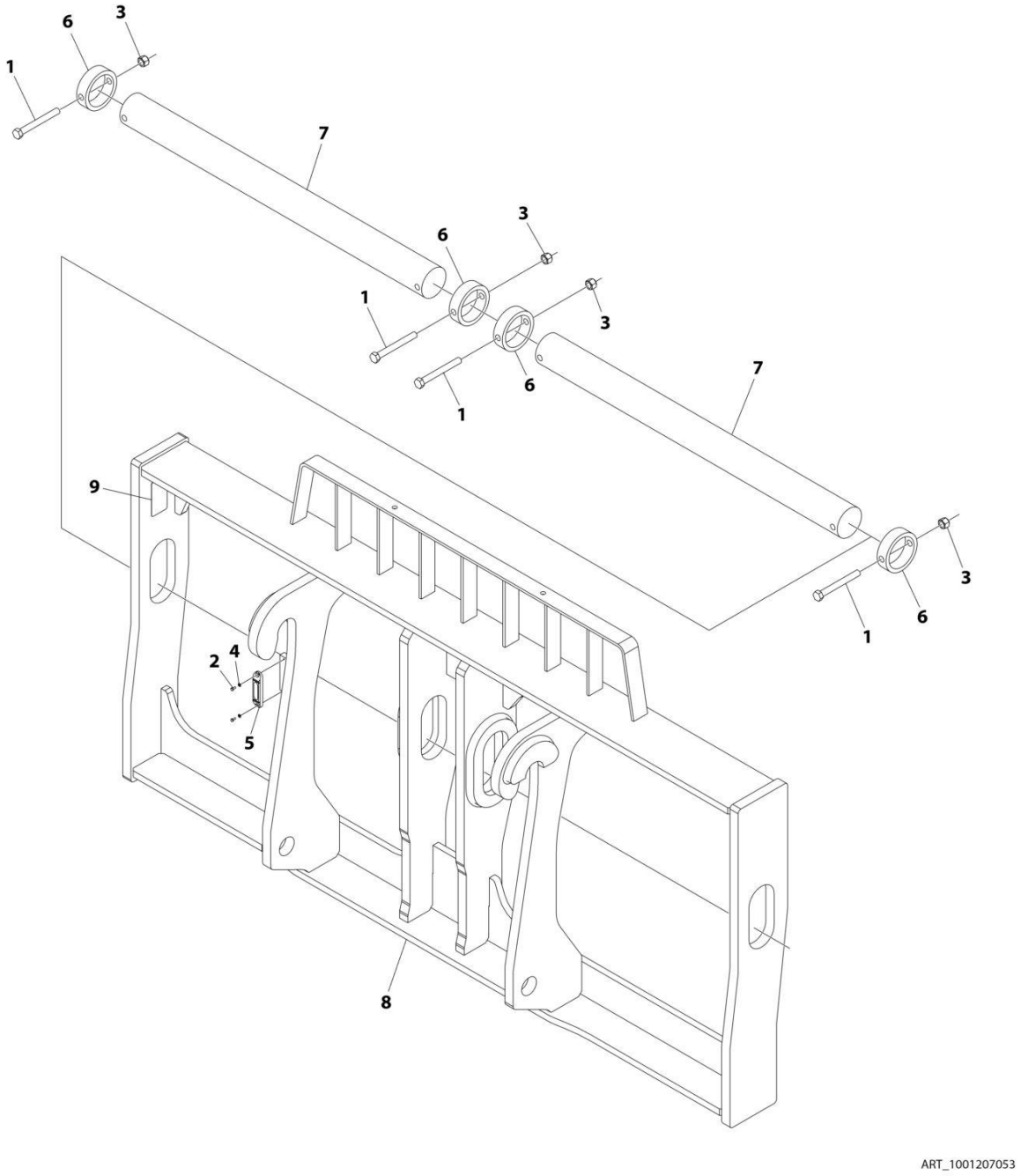

FIGURE 3-4. CARRIAGE ASSEMBLY (87 INCH)

ITEM	PART NUMBER	QTY	DESCRIPTION	REV
	1001207053	Ref	CARRIAGE ASSEMBLY (87 INCH)	D
1	0701631	4	Bolt M16 x 140	
2	0760405	2	Bolt M4 x 10	
3	3291605	4	Nut M16	
4	4811400	2	Washer M4	
5	1001227670	1	Tag, RFID	
6	1001259542	4	Stop, Carriage Shaft	
7	See Note	NSS	Shaft, Carriage (Note: Purchase Complete Assembly)	
8	See Note	NSS	Carriage (Note: Purchase Complete Assembly)	
9	See Note	NSS	SN Plate (Note:Stamped Part - Not Available for Purchase)	

FIGURE 3-5. DUAL FORK POSITIONING SIDE SHIFT CARRIAGE

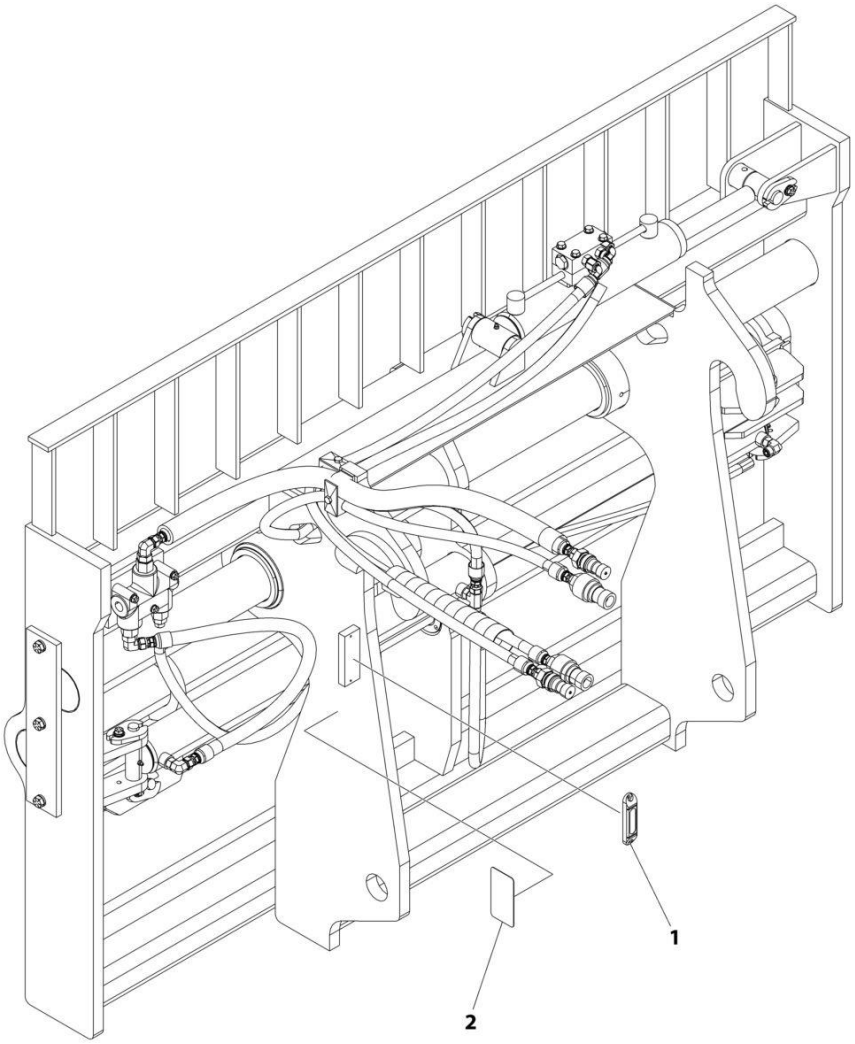

ART_1001207054

FIGURE 3-5. DUAL FORK POSITIONING SIDE SHIFT CARRIAGE

ITEM	PART NUMBER	QTY	DESCRIPTION	REV
	1001207054	Ref	DUAL FORK POSITIONING SIDE SHIFT CARRIAGE	B
1	1001227670	1	Tag, RFID	
2	See Note	NSS	SN Plate (Note:Stamped Part - Not Available for Purchase)	

FIGURE 3-6. DUAL FORK POSITIONING CARRIAGE, (72IN/1829MM)

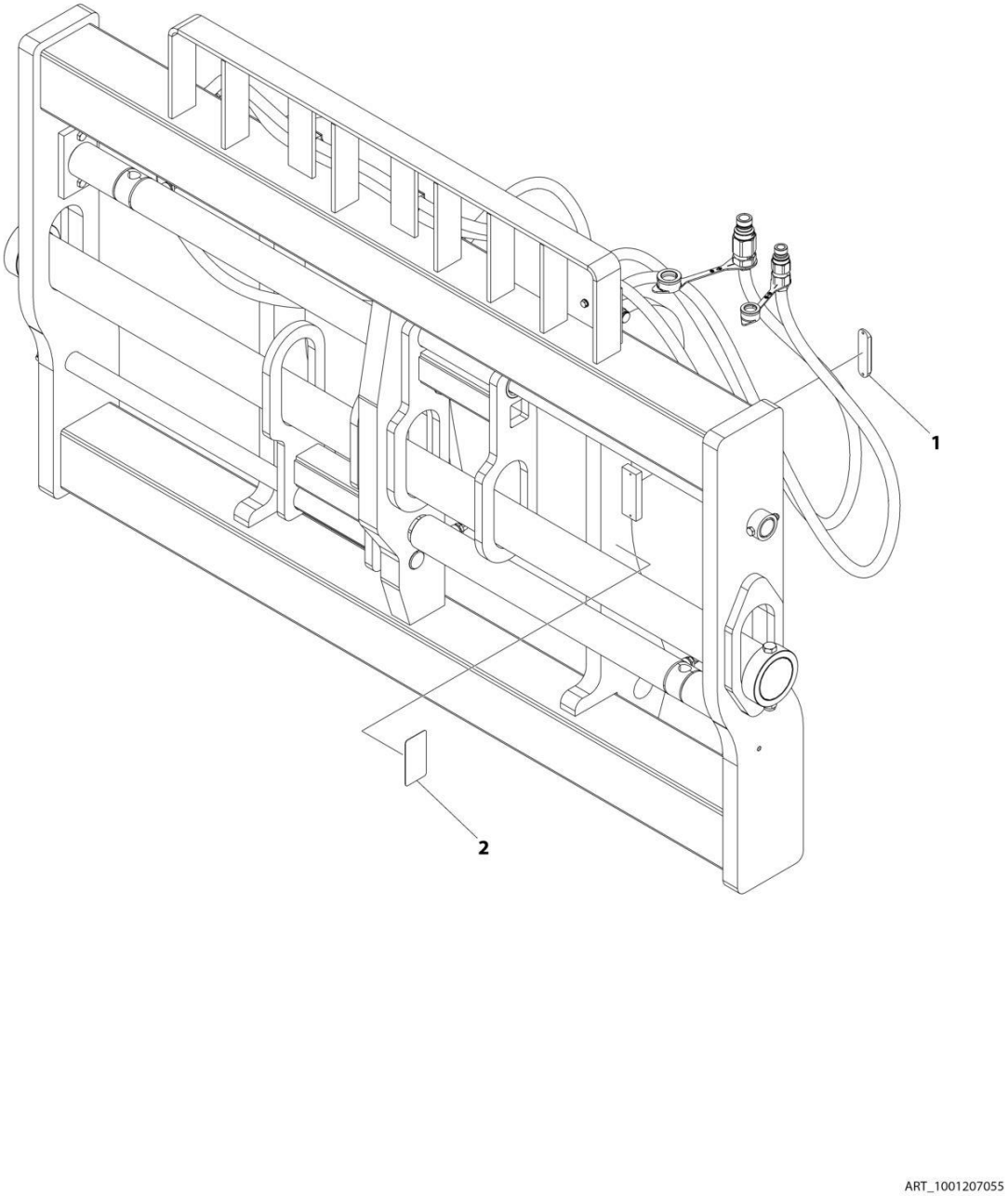

FIGURE 3-6. DUAL FORK POSITIONING CARRIAGE, (72IN/1829MM)

ITEM	PART NUMBER	QTY	DESCRIPTION	REV
	1001207055	Ref	DUAL FORK POSITIONING CARRIAGE	A
1	1001227670	1	Tag, RFID	
2	See Note	NSS	SN Plate (Note:Stamped Part - Not Available for Purchase)	

FIGURE 3-7. FORK - PALLET (2.75X7.87X48)

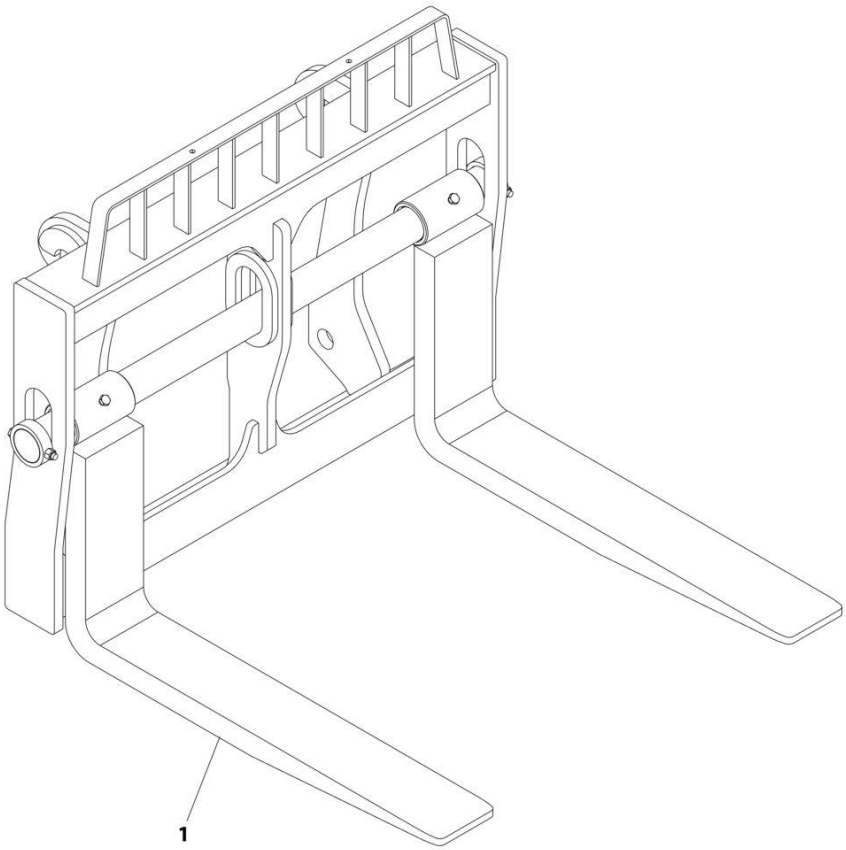

ART_1001260772

FIGURE 3-7. FORK - PALLET (2.75X7.87X48)

ITEM	PART NUMBER	QTY	DESCRIPTION	REV
1	1001260772	1 pr	FORK - PALLET (2.75X7.87X48)	B
	Note	Ref	FORKS RATED LESS THAN THE ATTACHMENT OR MACHINE'S CAPACITY DECREASES CAPACITY OF THE ATTACHMENT OR MACHINE TO THAT OF THE FORKS. FORKS RATED MORE THAN THE ATTACHMENT OR MACHINE'S CAPACITY DO NOT INCREASE ATTACHMENT OR MACHINE'S CAPACITY.	
	Note	Ref	PLEASE CONSULT JLG PARTS DEPARTMENT TO DETERMINE THE CORRECT FORKS APPLICABLE TO YOUR SPECIFIC CARRIAGE ASSEMBLY AND APPLICATION.	

FIGURE 3-8. FORK - PALLET (2.75X7.87X60)

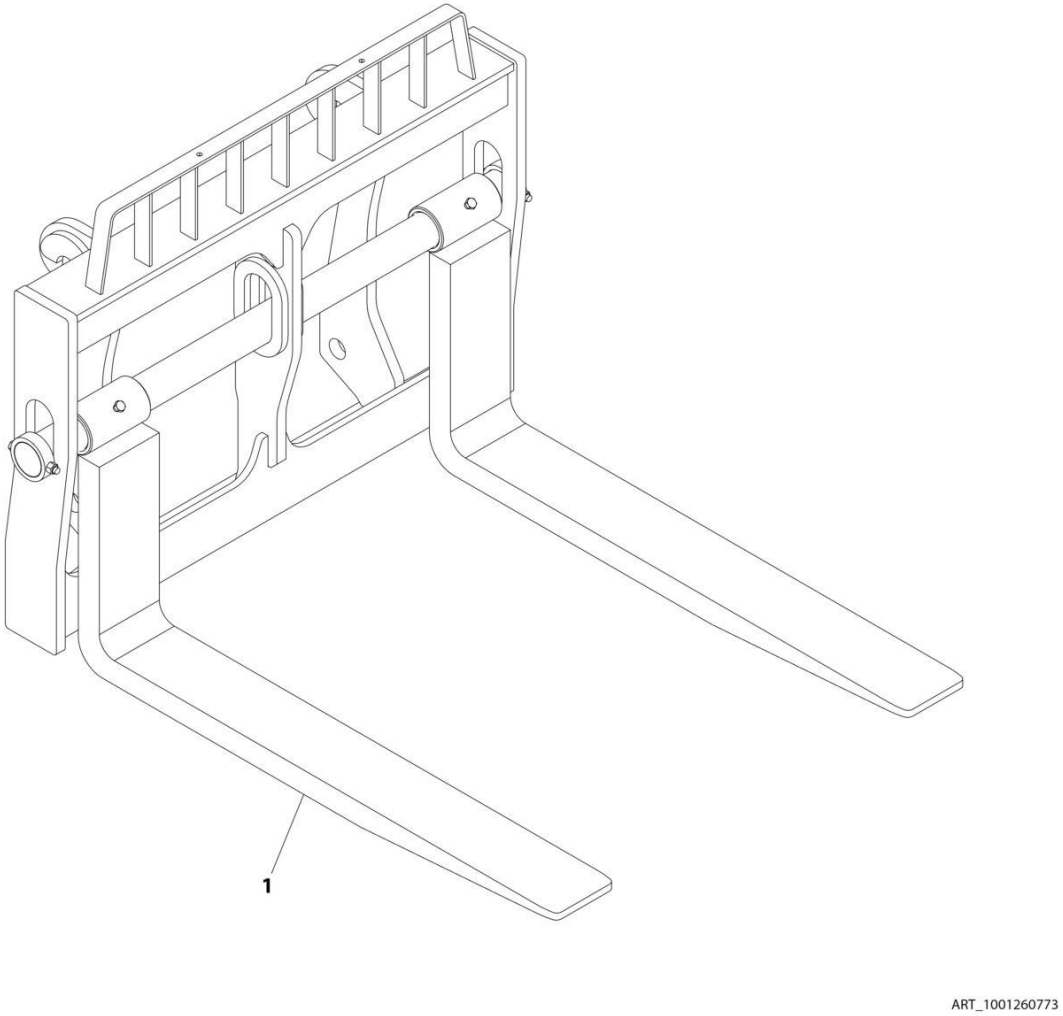

FIGURE 3-8. FORK - PALLET (2.75X7.87X60)

ITEM	PART NUMBER	QTY	DESCRIPTION	REV
	1001260773	1 pr	FORK - PALLET (2.75X7.87X60)	B
	Note	Ref	FORKS RATED LESS THAN THE ATTACHMENT OR MACHINE'S CAPACITY DECREASES CAPACITY OF THE ATTACHMENT OR MACHINE TO THAT OF THE FORKS. FORKS RATED MORE THAN THE ATTACHMENT OR MACHINE'S CAPACITY DO NOT INCREASE ATTACHMENT OR MACHINE'S CAPACITY.	
	Note	Ref	PLEASE CONSULT JLG PARTS DEPARTMENT TO DETERMINE THE CORRECT FORKS APPLICABLE TO YOUR SPECIFIC CARRIAGE ASSEMBLY AND APPLICATION.	

FIGURE 3-9. FORK - PALLET (2.75X7.87X72)

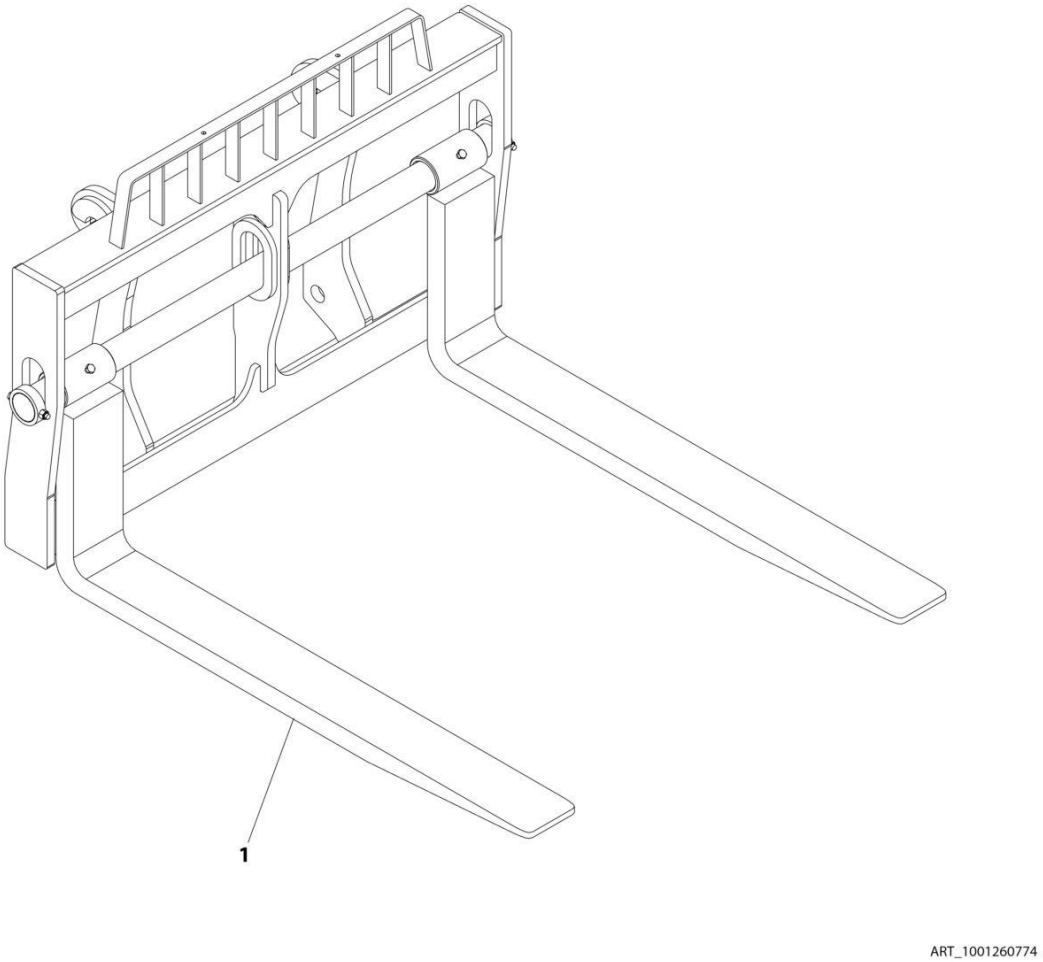

FIGURE 3-9. FORK - PALLET (2.75X7.87X72)

ITEM	PART NUMBER	QTY	DESCRIPTION	REV
1	1001260774	1 pr	FORK - PALLET (2.75X7.87X72)	B
	Note	Ref	FORKS RATED LESS THAN THE ATTACHMENT OR MACHINE'S CAPACITY DECREASES CAPACITY OF THE ATTACHMENT OR MACHINE TO THAT OF THE FORKS. FORKS RATED MORE THAN THE ATTACHMENT OR MACHINE'S CAPACITY DO NOT INCREASE ATTACHMENT OR MACHINE'S CAPACITY.	
	Note	Ref	PLEASE CONSULT JLG PARTS DEPARTMENT TO DETERMINE THE CORRECT FORKS APPLICABLE TO YOUR SPECIFIC CARRIAGE ASSEMBLY AND APPLICATION.	

FIGURE 3-10. FORK - PALLET (2.75X7.87X96)

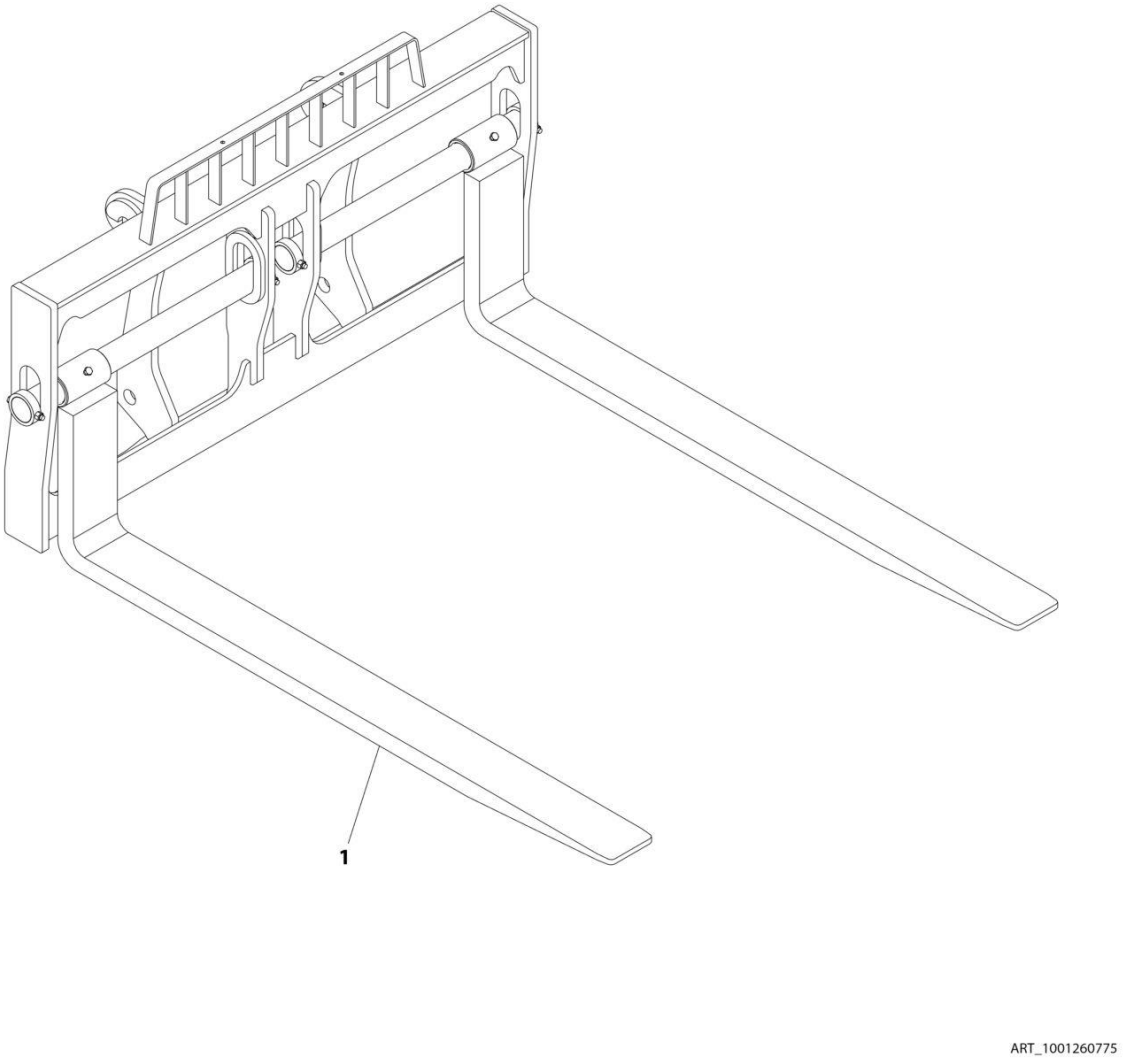

FIGURE 3-10. FORK - PALLET (2.75X7.87X96)

ITEM	PART NUMBER	QTY	DESCRIPTION	REV
1	1001260775	1 pr	FORK - PALLET (2.75X7.87X96)	B
	Note	Ref	FORKS RATED LESS THAN THE ATTACHMENT OR MACHINE'S CAPACITY DECREASES CAPACITY OF THE ATTACHMENT OR MACHINE TO THAT OF THE FORKS. FORKS RATED MORE THAN THE ATTACHMENT OR MACHINE'S CAPACITY DO NOT INCREASE ATTACHMENT OR MACHINE'S CAPACITY.	
	Note	Ref	PLEASE CONSULT JLG PARTS DEPARTMENT TO DETERMINE THE CORRECT FORKS APPLICABLE TO YOUR SPECIFIC CARRIAGE ASSEMBLY AND APPLICATION.	

FIGURE 3-11. FORK MOUNTED PLATFORM (ANSI)

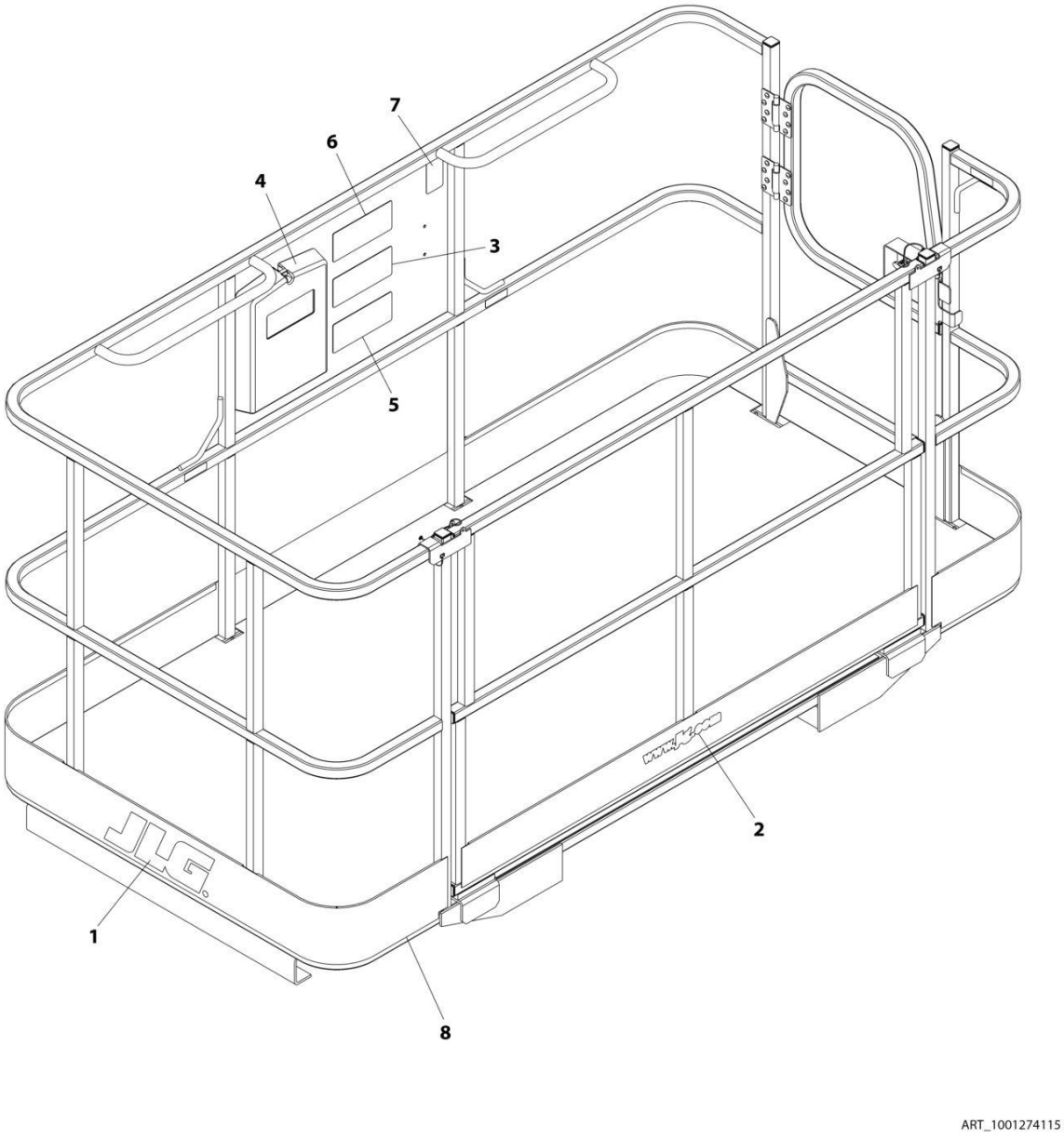

FIGURE 3-11. FORK MOUNTED PLATFORM (ANSI)

ITEM	PART NUMBER	QTY	DESCRIPTION	REV
	1001274115	Ref	FORK MOUNTED PLATFORM	B
1	1702773	2	Decal, JLG	
2	1704885	1	Decal, Website	
3	1706892	1	Decal, Platform Warning	
4	31200160	1	Manual, Personnel Work Platform Operation and Safety	
5	1001092481	1	Decal, Warning Attachment	
6	1001092482	1	Decal, Platform Capacity	
7	See Note	NSS	SN Plate (Note: Stamped Part - Not Available for Purchase)	
8	1001274113	1	Platform, Side Entry (See Separate Breakdown in this Section)	

FIGURE 3-12. FORK MOUNTED PLATFORM (CSA)

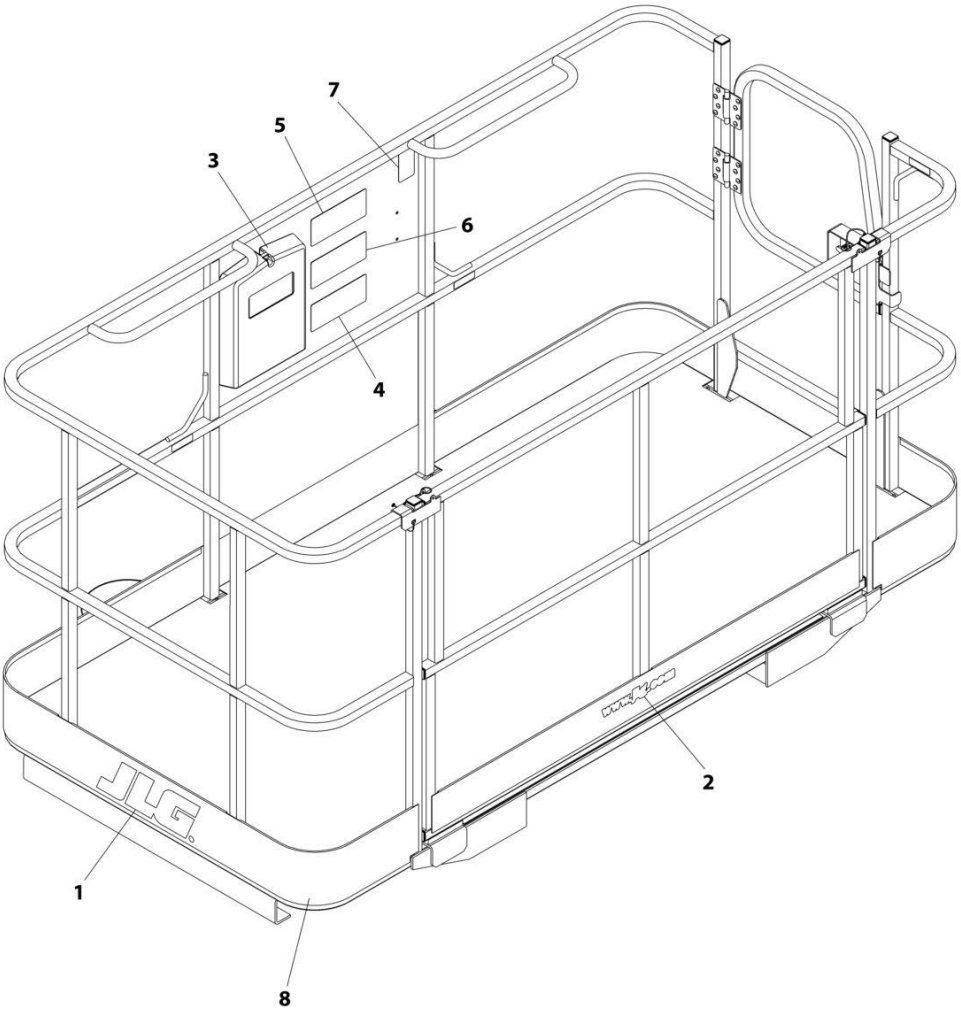

ART_1001274117

FIGURE 3-12. FORK MOUNTED PLATFORM (CSA)

ITEM	PART NUMBER	QTY	DESCRIPTION	REV
	1001274117	Ref	FORK MOUNTED PLATFORM	B
1	1702773	2	Decal, JLG	
2	1704885	1	Decal, Website	
3	31200386	1	Manual, Operation and Safety	
4	1001096019	1	Decal, Warning Attachment	
5	1001096020	1	Decal, Platform Capacity	
6	1001096024	1	Decal, Platform Warning	
7	See Note	NSS	SN Plate (Note: Stamped Part - Not Available for Purchase)	
8	1001274113	1	Platform, Side Entry (See Separate Breakdown in this Section)	

FIGURE 3-13. FORK MOUNTED PLATFORM (ISO)

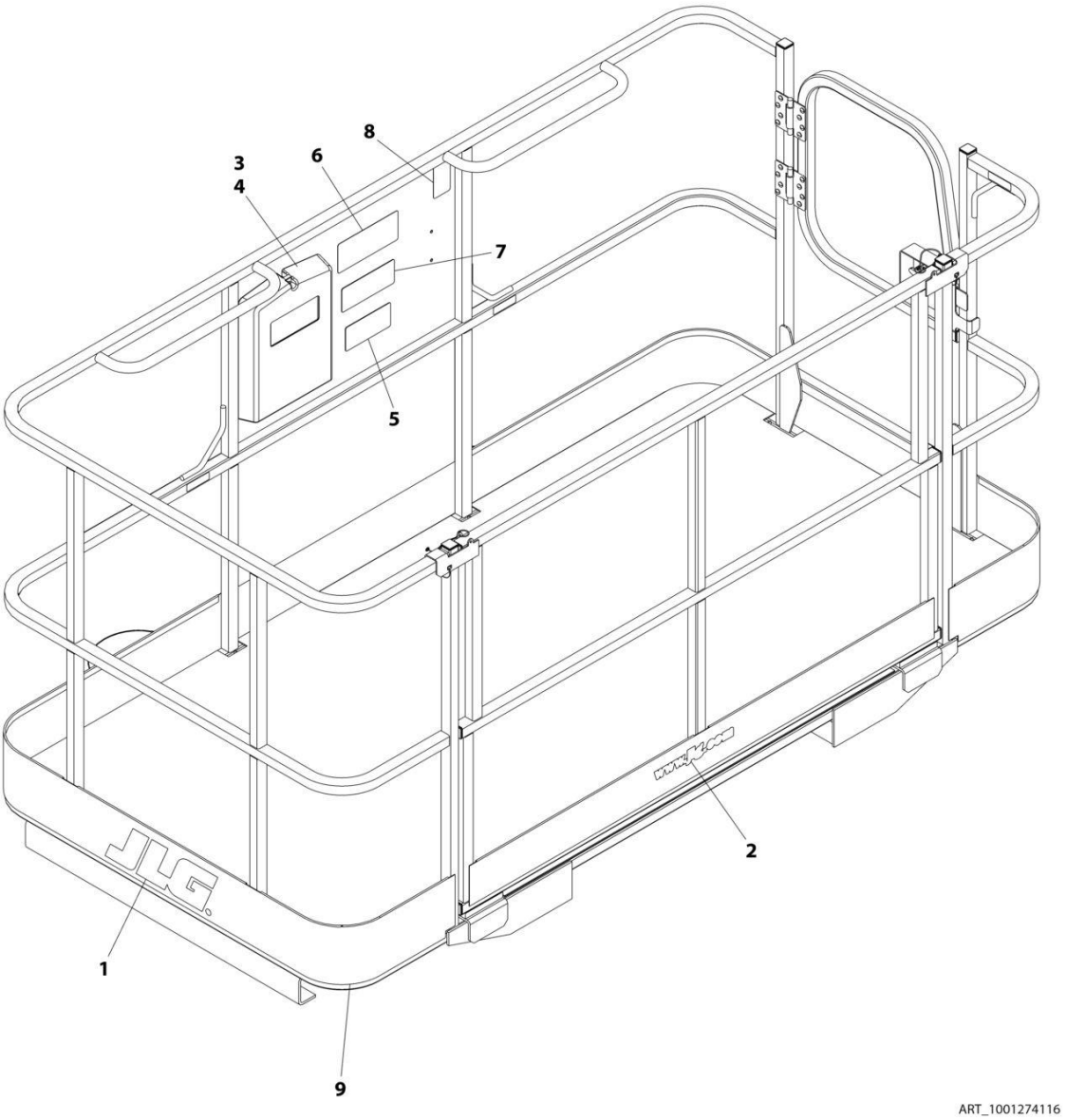

FIGURE 3-13. FORK MOUNTED PLATFORM (ISO)

ITEM	PART NUMBER	QTY	DESCRIPTION	REV
	1001274116	Ref	FORK MOUNTED PLATFORM ISO	B
1	1702773	2	Decal, JLG	
2	1704885	1	Decal, Website	
3	31200387	1	Manual, Operation and Safety (SPANISH)	
4	31200388	1	Manual, Operation and Safety (PORTUGUESE)	
5	1001096021	1	Decal, Warning Attachment	
6	1001096023	1	Decal, Platform Capacity	
7	1001096025	1	Decal, Platform Warning	
8	See Note	NSS	SN Plate (Note: Stamped Part - Not Available for Purchase)	
9	1001274113	1	Platform, Side Entry (See Separate Breakdown in this Section)	

FIGURE 3-14. PLATFORM SIDE ENTRY

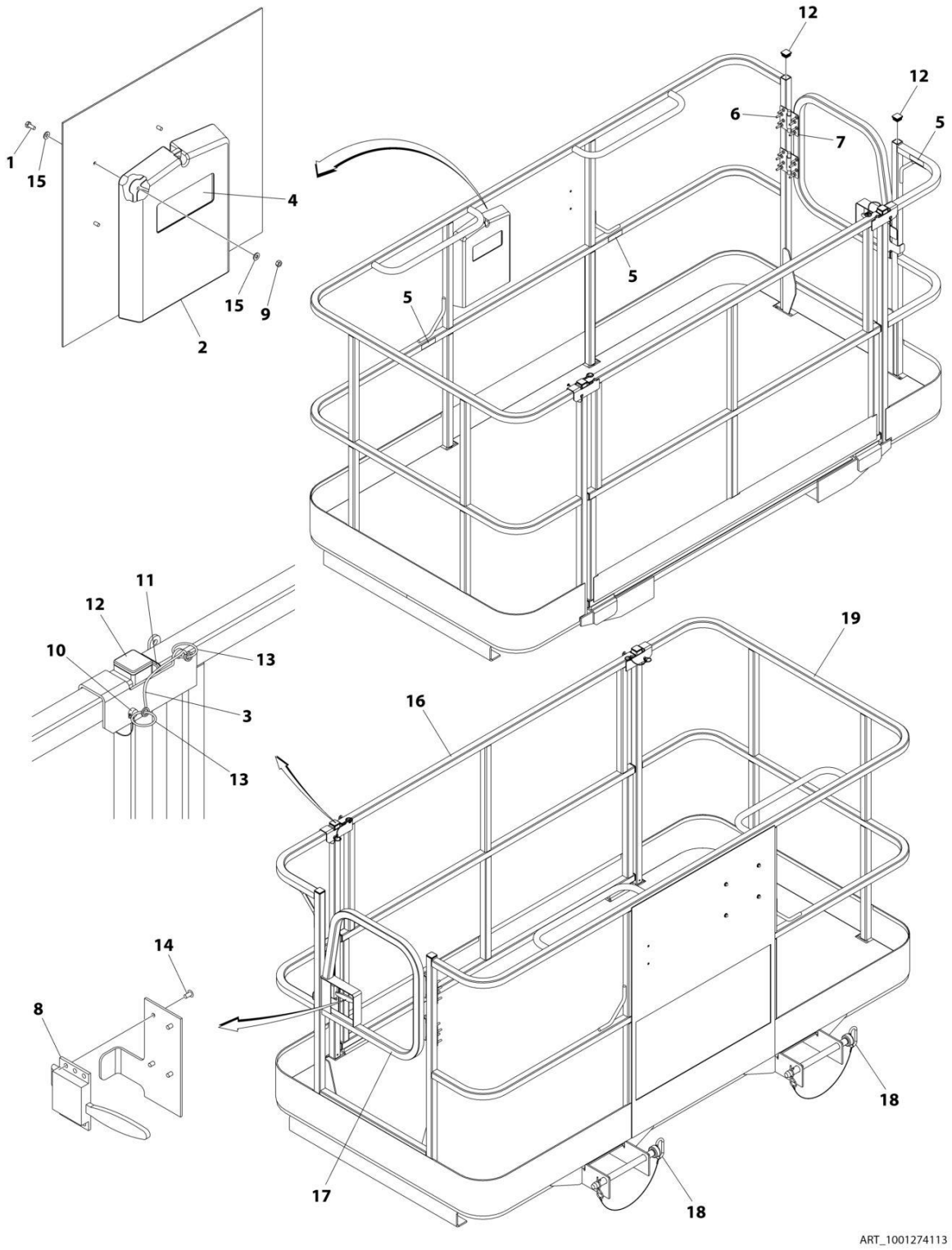

FIGURE 3-14. PLATFORM SIDE ENTRY

ITEM	PART NUMBER	QTY	DESCRIPTION	REV
	1001274113	Ref	PLATFORM SIDE ENTRY	B
1	0641405	4	Bolt 1/4 x 5/8	
2	0860520	1	Box, Manual Storage	
3	1060379	2	Cable, Lanyard	
4	1701509	1	Decal, Manual	
5	1704277	3	Decal, Lanyard Attach	
6	2080040	16	Fastener	
7	2600281	2	Hinge	
8	2940074	1	Latch	
9	3311405	4	Nut 1/4	
10	3421453	2	Pin	
11	3520072	7	Plug	
12	3520198	4	Plug	
13	3760170	4	Ring	
14	3820020	4	Rivet	
15	4711400	8	Washer 1/4	
16	1001095810	1	Gate	
17	1001144629J	1	Gate	
18	1001274111	2	Pin, Hitch	
19	1001274112	1	Platform, Fork Mounted	

FIGURE 3-15. BUCKET, GENERAL PURPOSE (94", 3.9YD3)

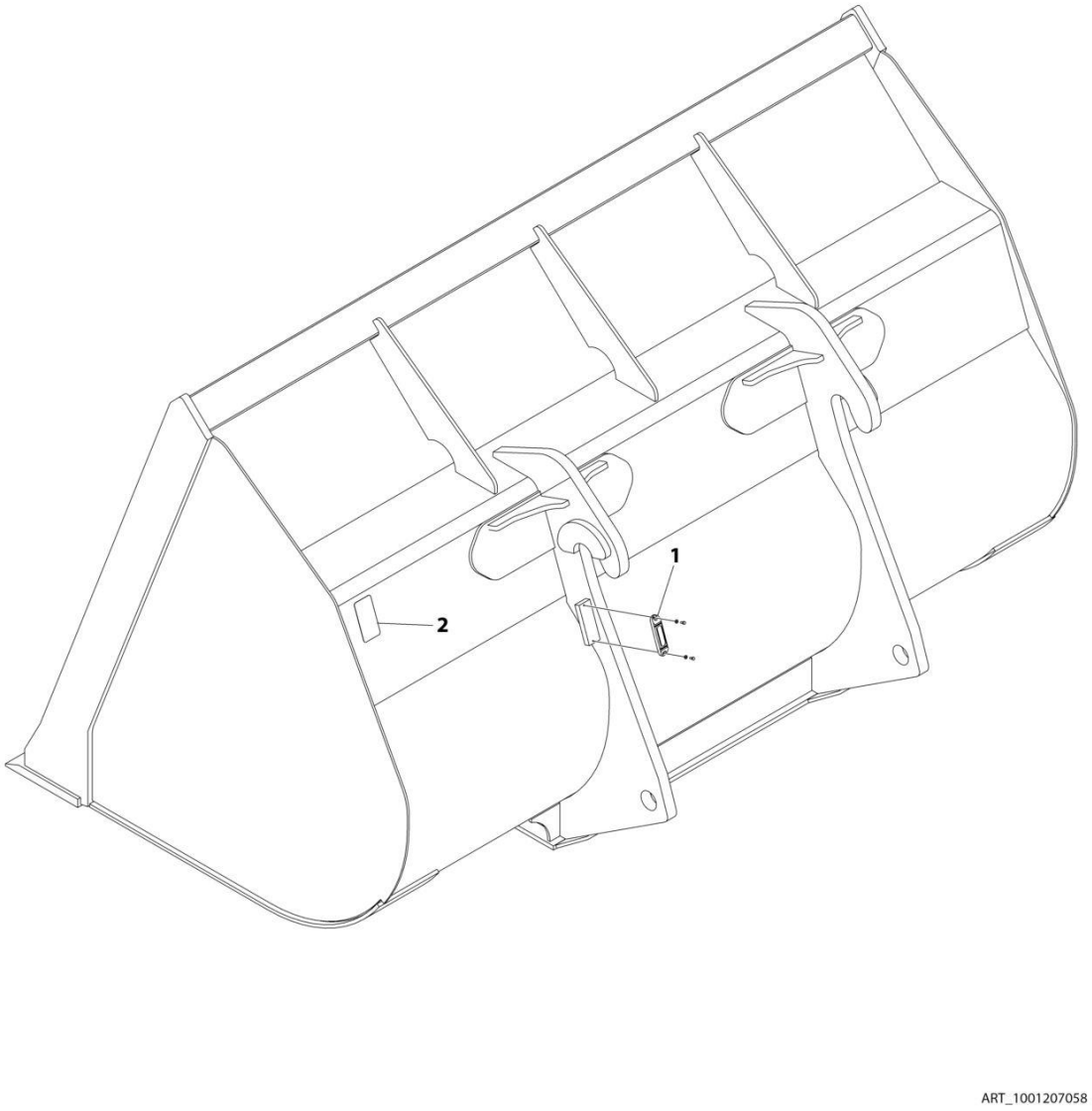

FIGURE 3-15. BUCKET, GENERAL PURPOSE (94", 3.9YD3)

ITEM	PART NUMBER	QTY	DESCRIPTION	REV
	1001207058	Ref	BUCKET, GENERAL PURPOSE (94", 3.9yd3)	B
1	1001227670	1	Tag, RFID	
2	N.S.S.	1	SN Plate (Note: Stamped Part - Not Available for Purchase)	

FIGURE 3-16. BUCKET, LIGHT MATERIAL (102", 6.5YD3)

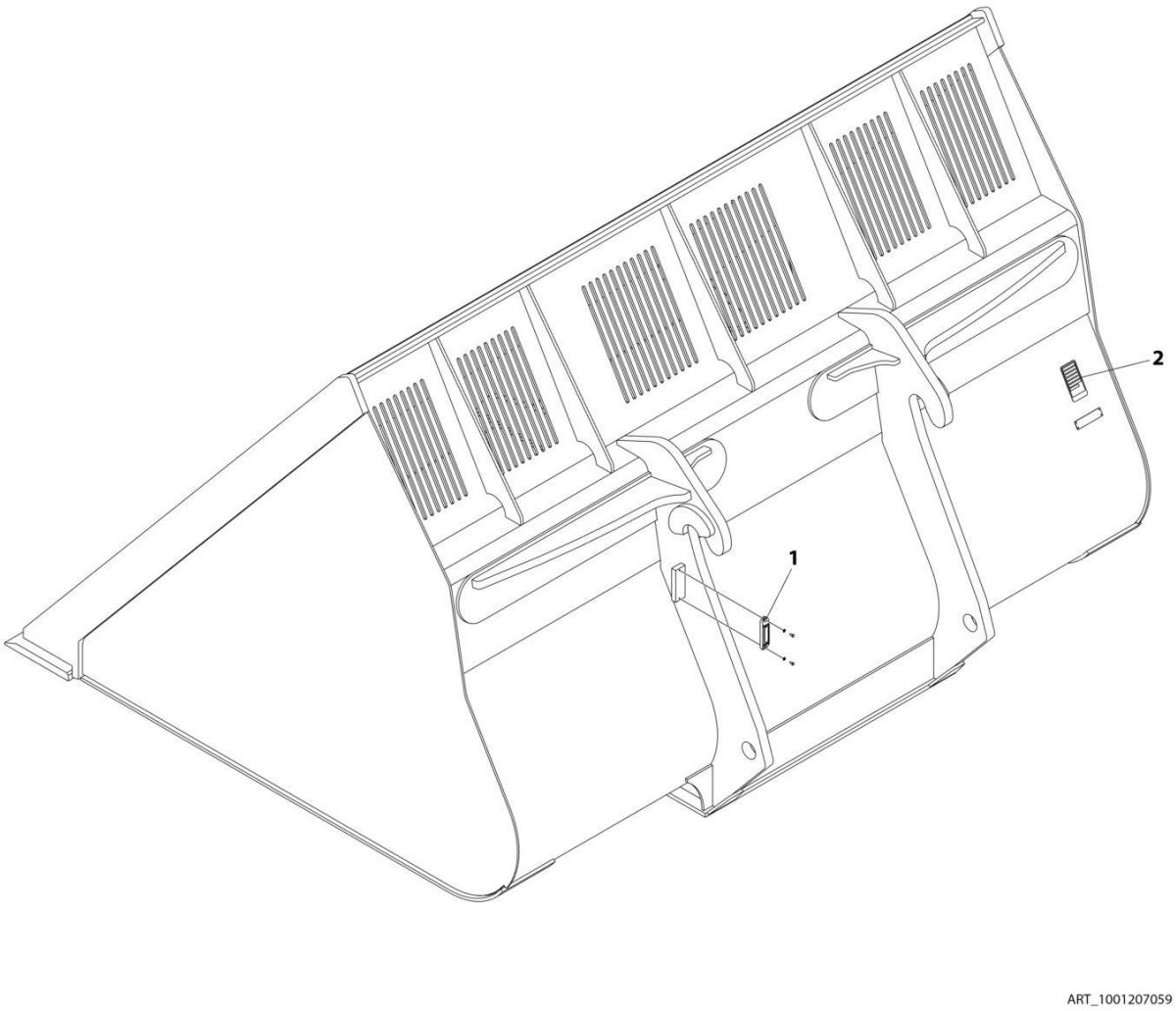

FIGURE 3-16. BUCKET, LIGHT MATERIAL (102", 6.5YD3)

ITEM	PART NUMBER	QTY	DESCRIPTION	REV
	1001207059	Ref	BUCKET, LIGHT MATERIAL (102", 6.5yd3)	B
1	1001227670	1	Tag, RFID	
2	N.S.S.	1	SN Plate (Note: Stamped Part - Not Available for Purchase)	

FIGURE 3-17. GRAPPLE BUCKET (2.4 M X 3.0M³)

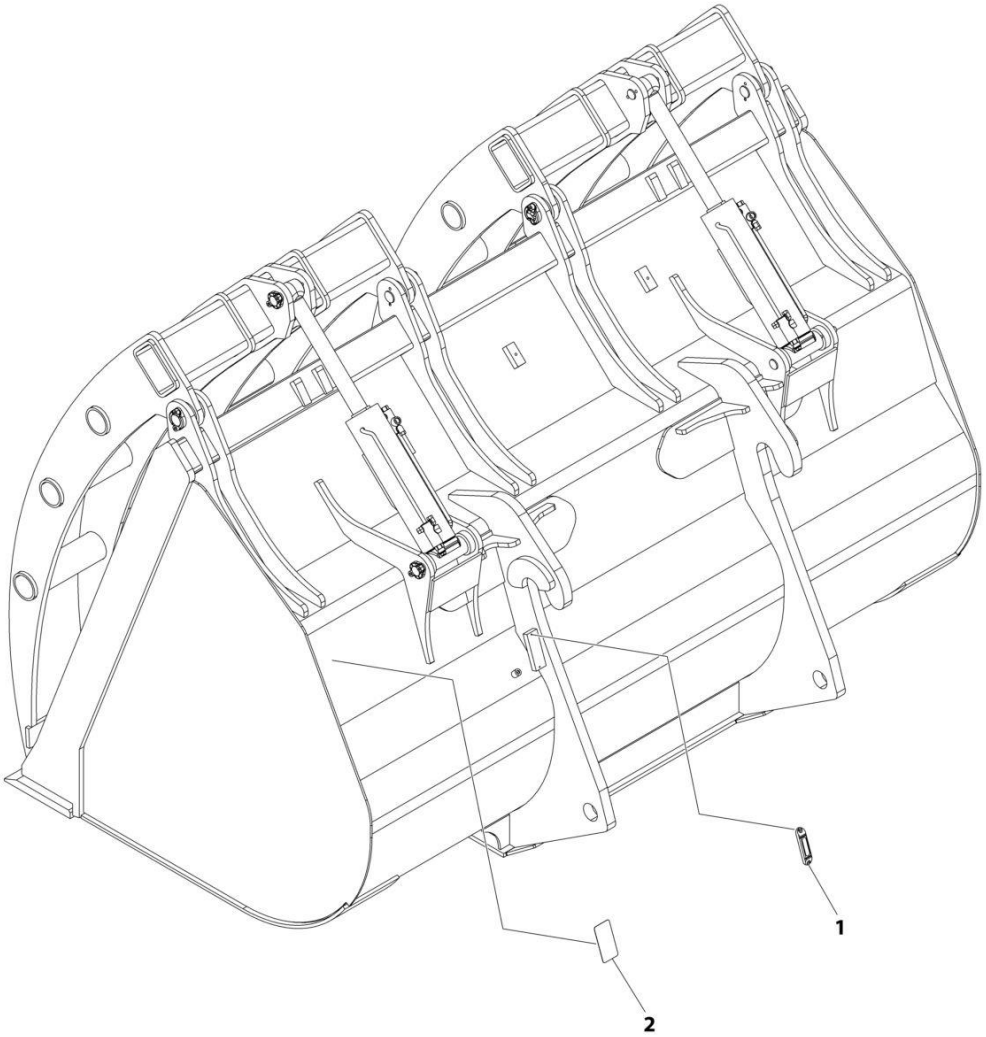

ART_1001207060

FIGURE 3-17. GRAPPLE BUCKET (2.4 M X 3.0M³)

ITEM	PART NUMBER	QTY	DESCRIPTION	REV
	1001207060	Ref	GRAPPLE BUCKET (2.4 M X 3.0M³)	B
1	1001227670	1	Tag, RFID	
2	See Note	NSS	SN Plate (Note: Stamped Part - Not Available for Purchase)	

FIGURE 3-18. LIFTING HOOK (30K)

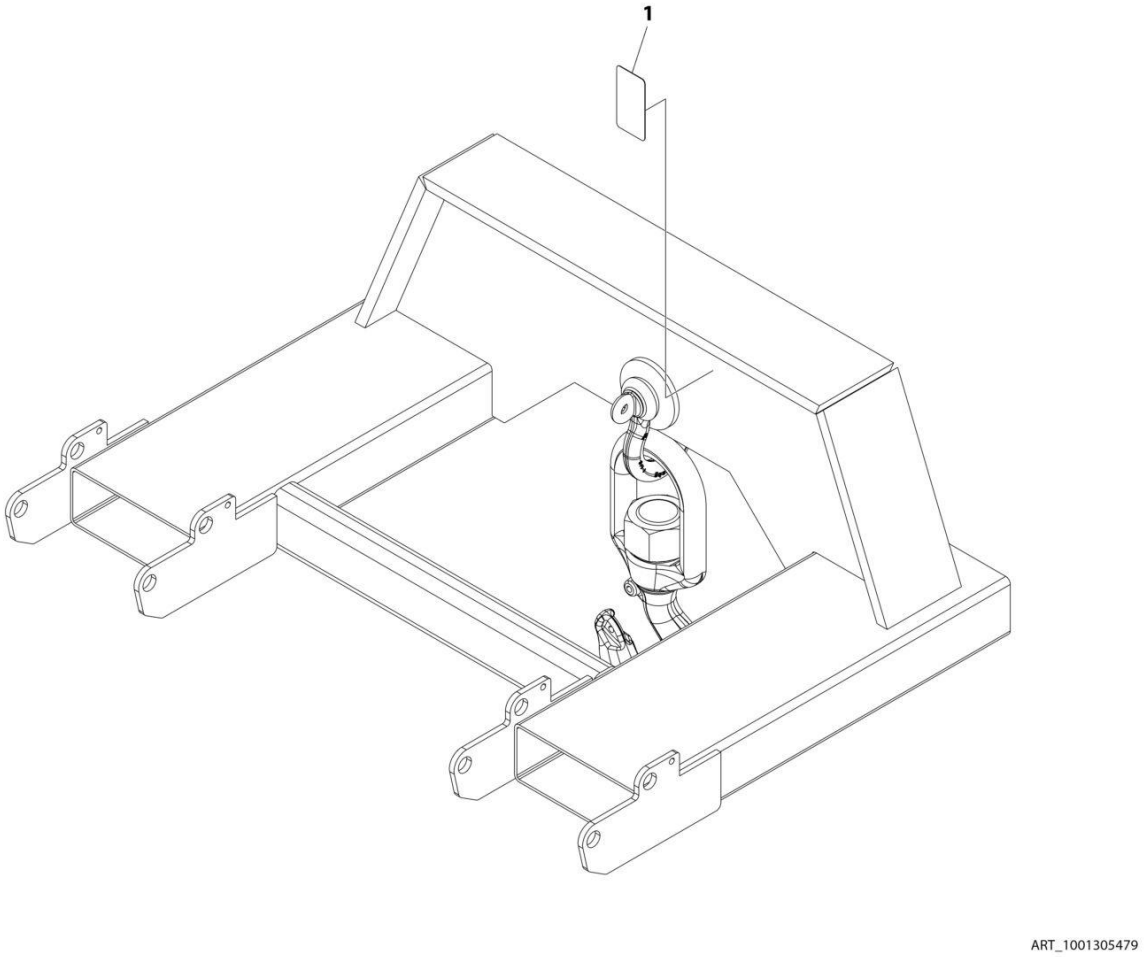

FIGURE 3-18. LIFTING HOOK (30K)

ITEM	PART NUMBER	QTY	DESCRIPTION	REV
	1001305479	Ref	LIFTING HOOK (30K)	A
1	See Note	NSS	SN Plate (Note: Not Available for Purchase)	

FIGURE 3-19. TRUSS BOOM

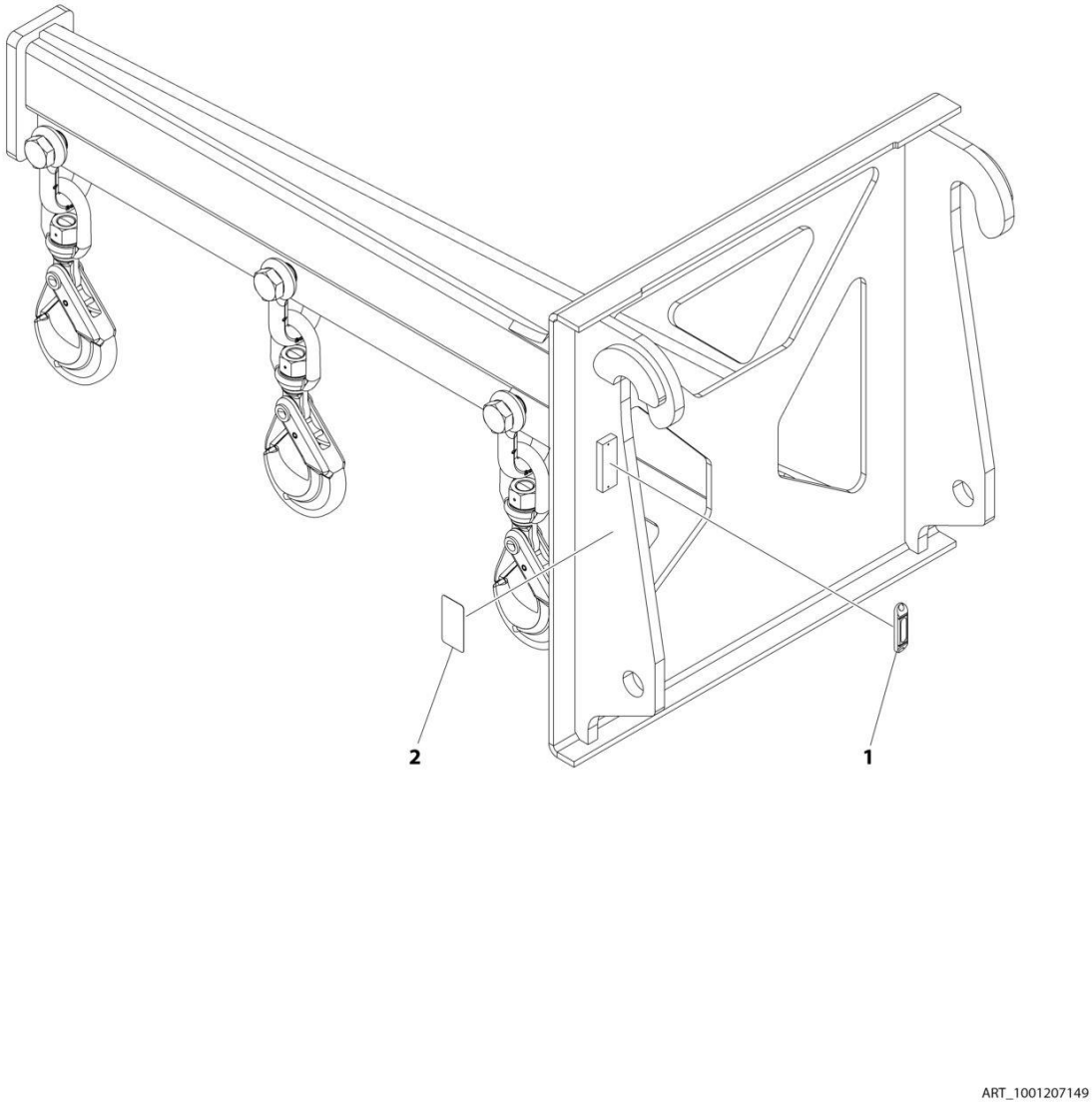

FIGURE 3-19. TRUSS BOOM

ITEM	PART NUMBER	QTY	DESCRIPTION	REV
	1001207149	Ref	TRUSS BEAM STYLE INSTALLATION	B
1	1001227670	1	Tag, RFID	
2	See Note	NSS	SN Plate (Note:Stamped Part - Not Available for Purchase)	

FIGURE 3-20. HYDRAULIC WINCH INSTALLATION (12 TON)

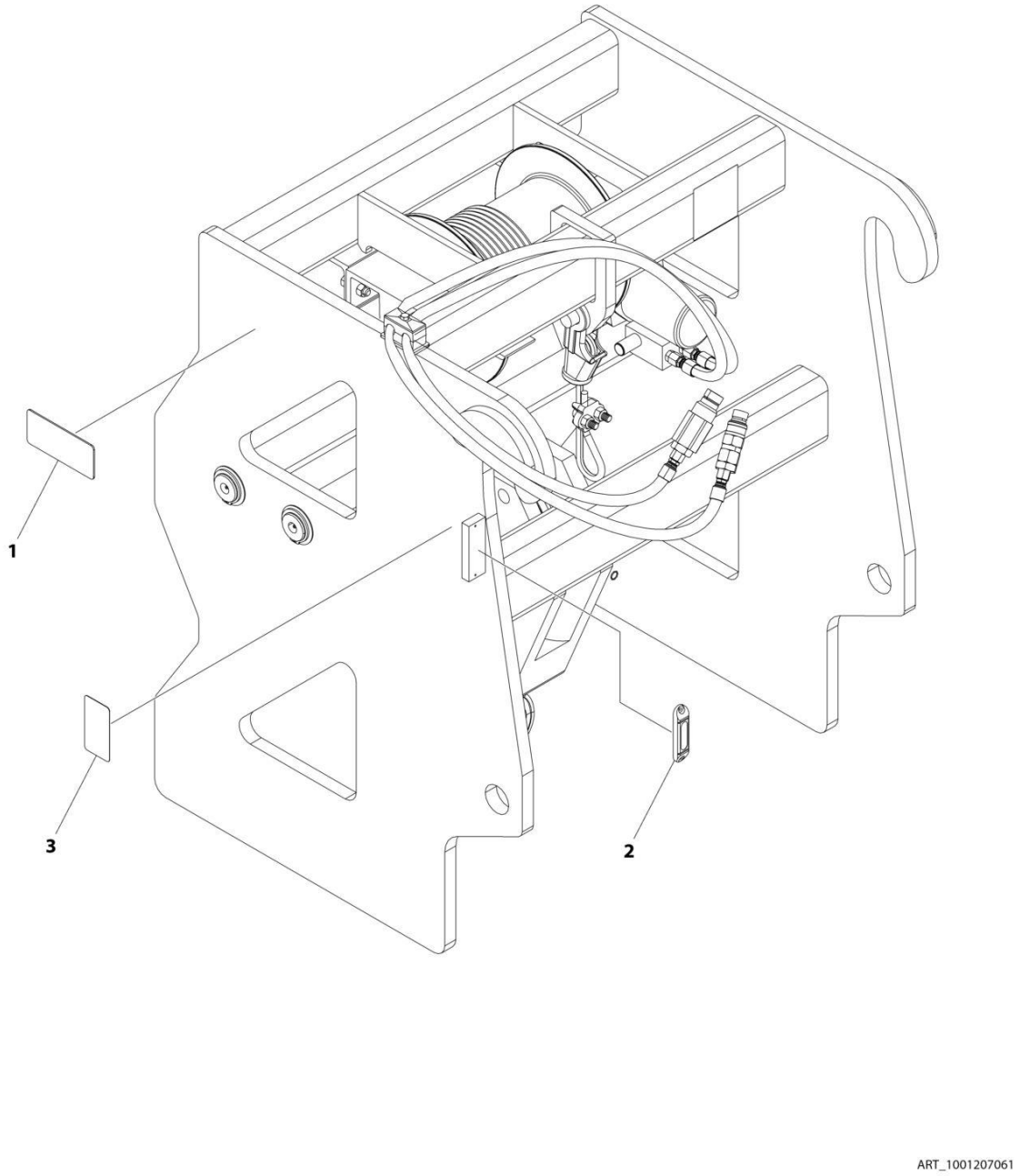

FIGURE 3-20. HYDRAULIC WINCH INSTALLATION (12 TON)

ITEM	PART NUMBER	QTY	DESCRIPTION	REV
	1001207061	Ref	HYDRAULIC WINCH INSTALLATION (12 TON)	B
1	4110422	2	Decal, Warning Swinging Loads	
2	1001227670	1	Tag, RFID	
3	See Note	NSS	SN Plate (Note: Stamped Part - Not Available for Purchase)	

FIGURE 3-21. PIPE GRAPPLE INSTALLATION

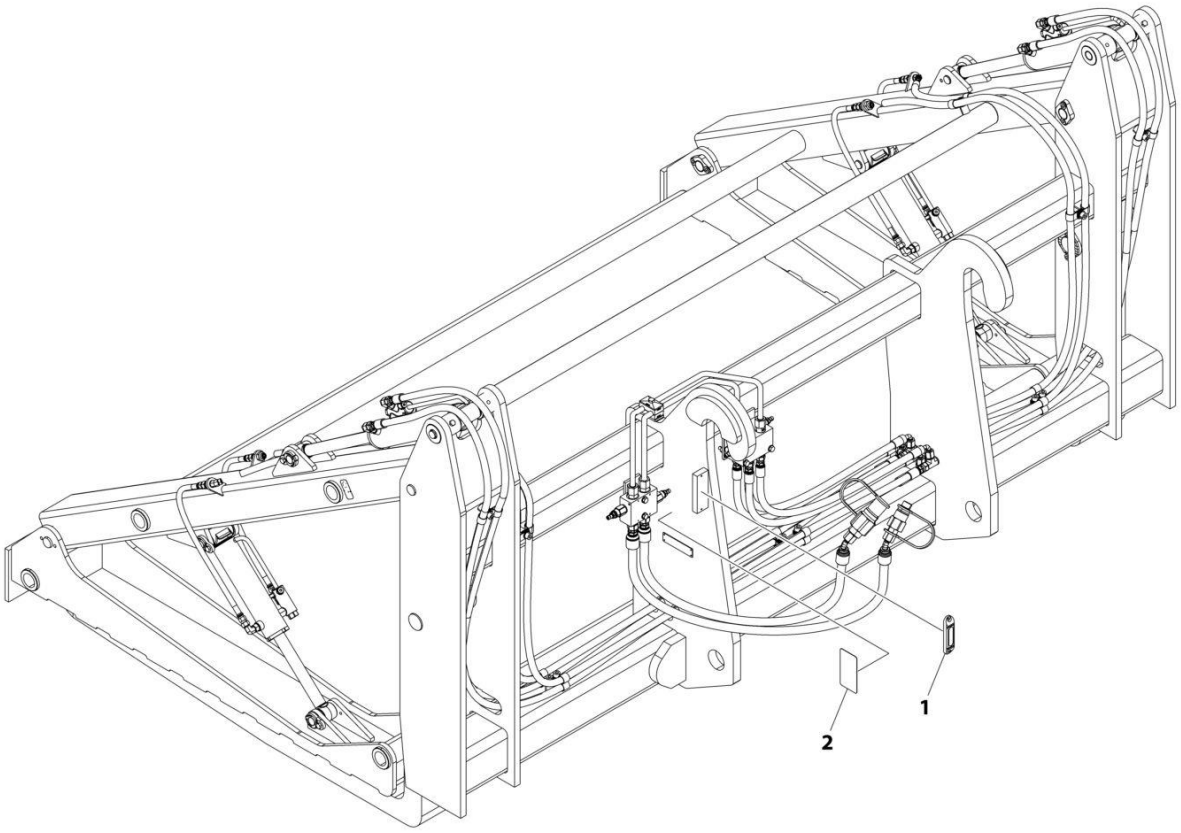

ART_1001207148

FIGURE 3-21. PIPE GRAPPLE INSTALLATION

ITEM	PART NUMBER	QTY	DESCRIPTION	REV
	1001207148	Ref	PIPE GRAPPLE INSTALLATION	B
1	1001227670	1	Tag, RFID	
2	N.S.S.	1	SN Plate (Note: Stamped Part - Not Available for Purchase)	

FIGURE 3-22. TIRE HANDLER INSTALLATION (2500KG)

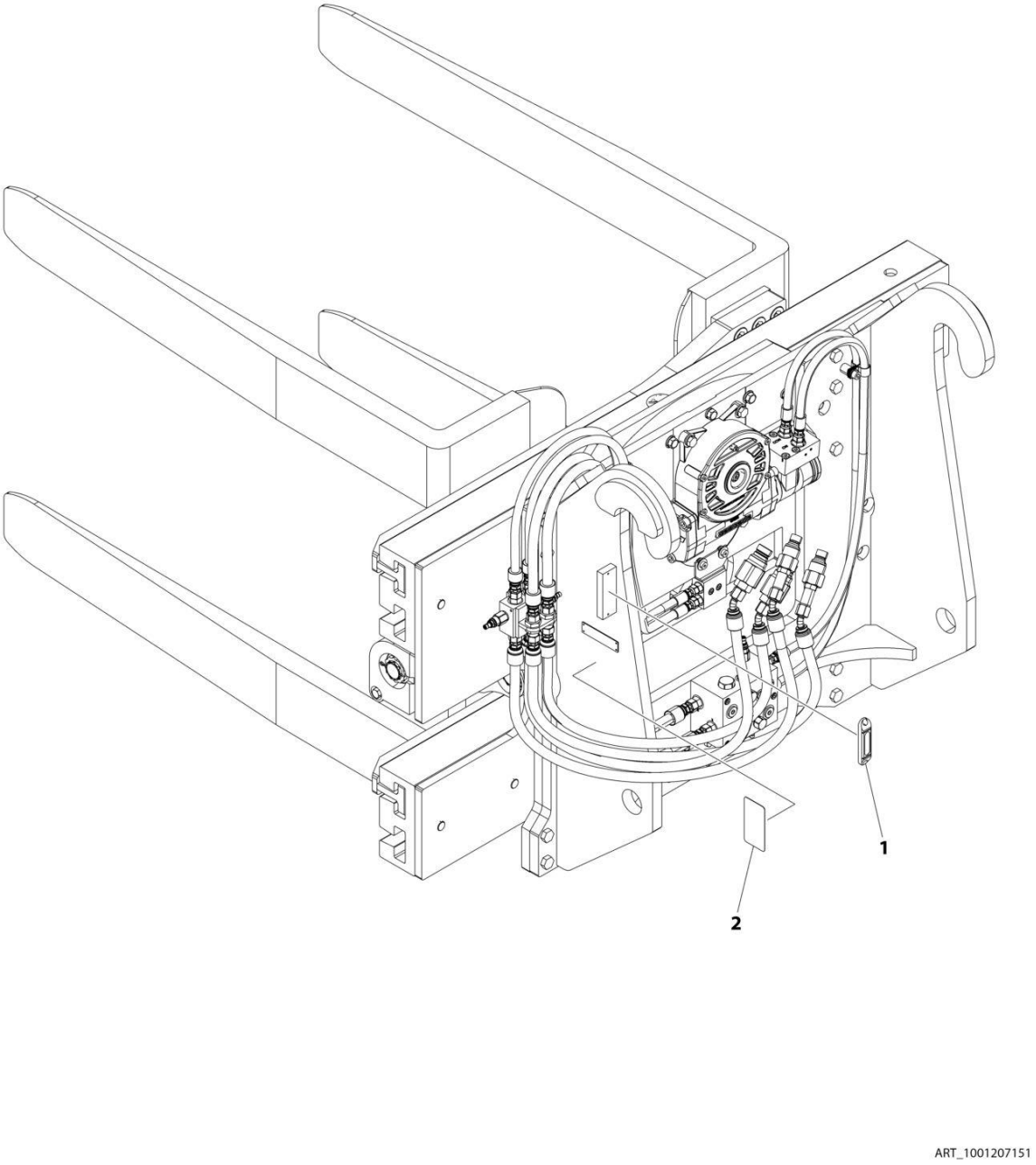

FIGURE 3-22. TIRE HANDLER INSTALLATION (2500KG)

ITEM	PART NUMBER	QTY	DESCRIPTION	REV
	1001207151	Ref	TIRE HANDLER INSTALLATION (2500KG)	B
1	1001227670	1	Tag, RFID	
2	See Note	NSS	SN Plate (Note:Stamped Part - Not Available for Purchase)	

FIGURE 3-23. LOG CLAMP INSTALLATION

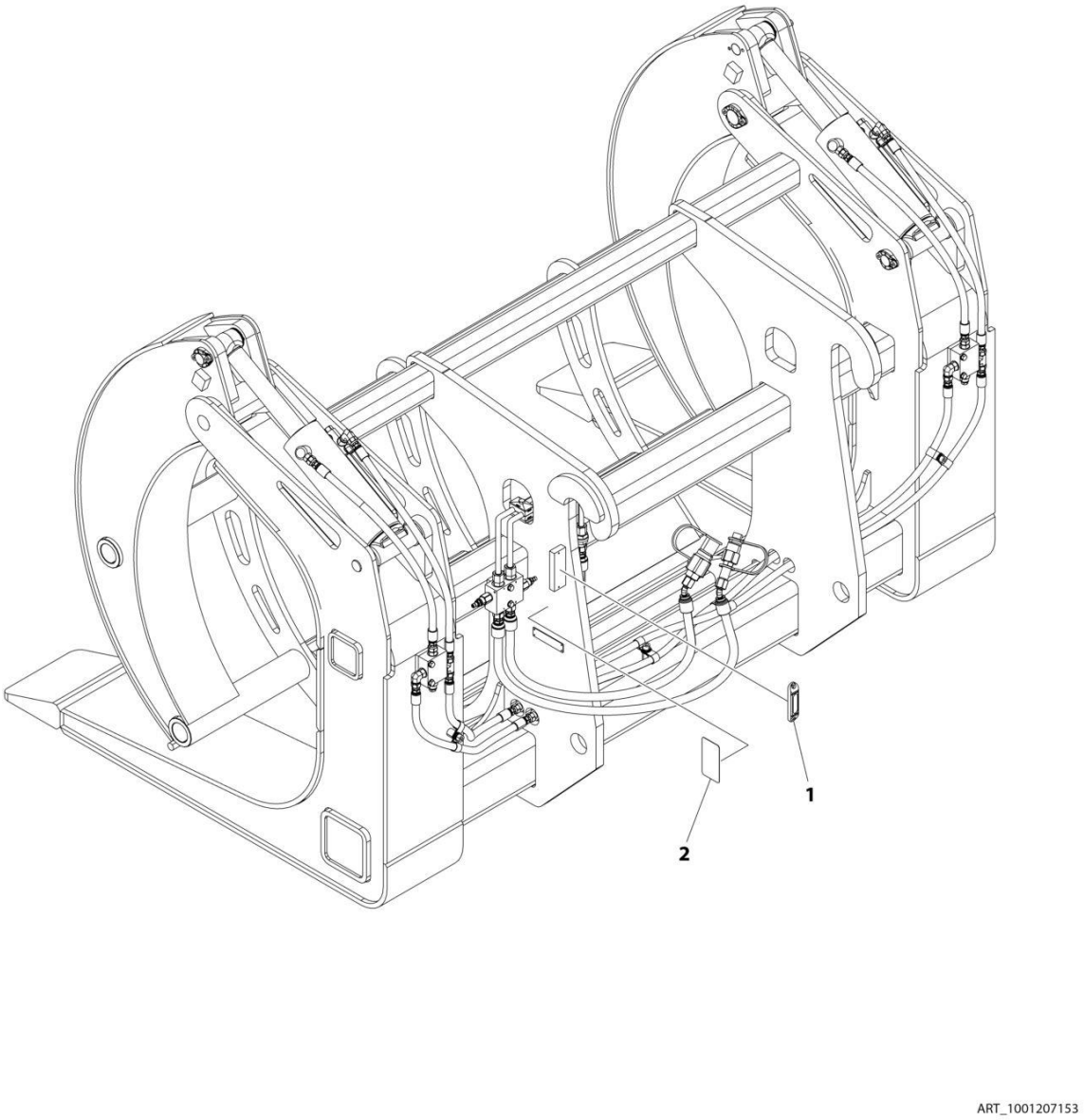

FIGURE 3-23. LOG CLAMP INSTALLATION

ITEM	PART NUMBER	QTY	DESCRIPTION	REV
	1001207153	Ref	LOG CLAMP INSTALLATION	B
1	1001227670	1	Tag, RFID	
2	See Note	NSS	SN Plate (Note:Stamped Part - Not Available for Purchase)	

FIGURE 3-24. STEEL COIL HANDLER

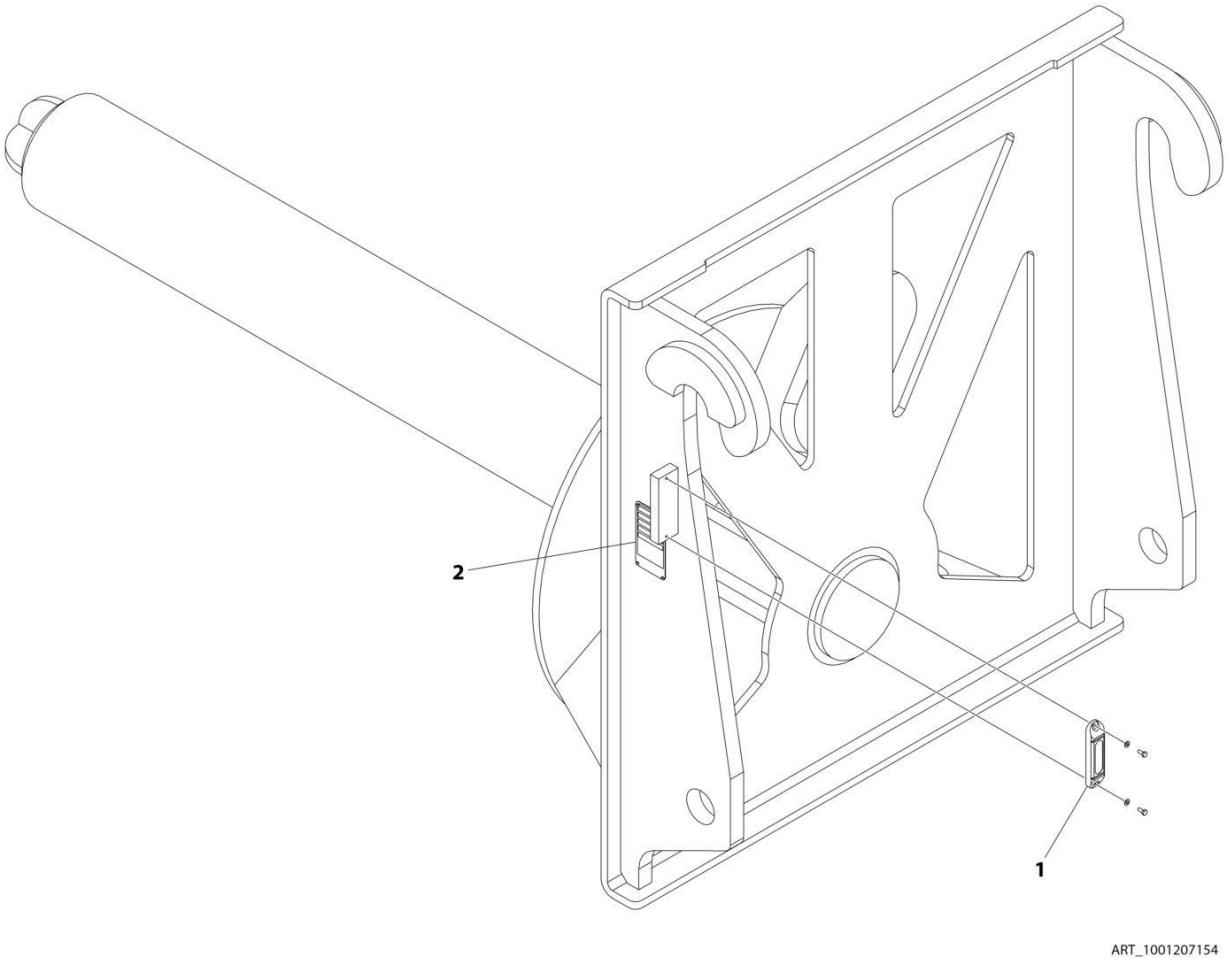

FIGURE 3-24. STEEL COIL HANDLER

ITEM	PART NUMBER	QTY	DESCRIPTION	REV
	1001207154	Ref	STEEL COIL HANDLER	B
1	1001227670	1	Tag, RFID	
2	N.S.S.	1	SN Plate (Note: Stamped Part - Not Available for Purchase)	

FIGURE 3-25. TIRE HANDLER INSTALLATION (6800KG)

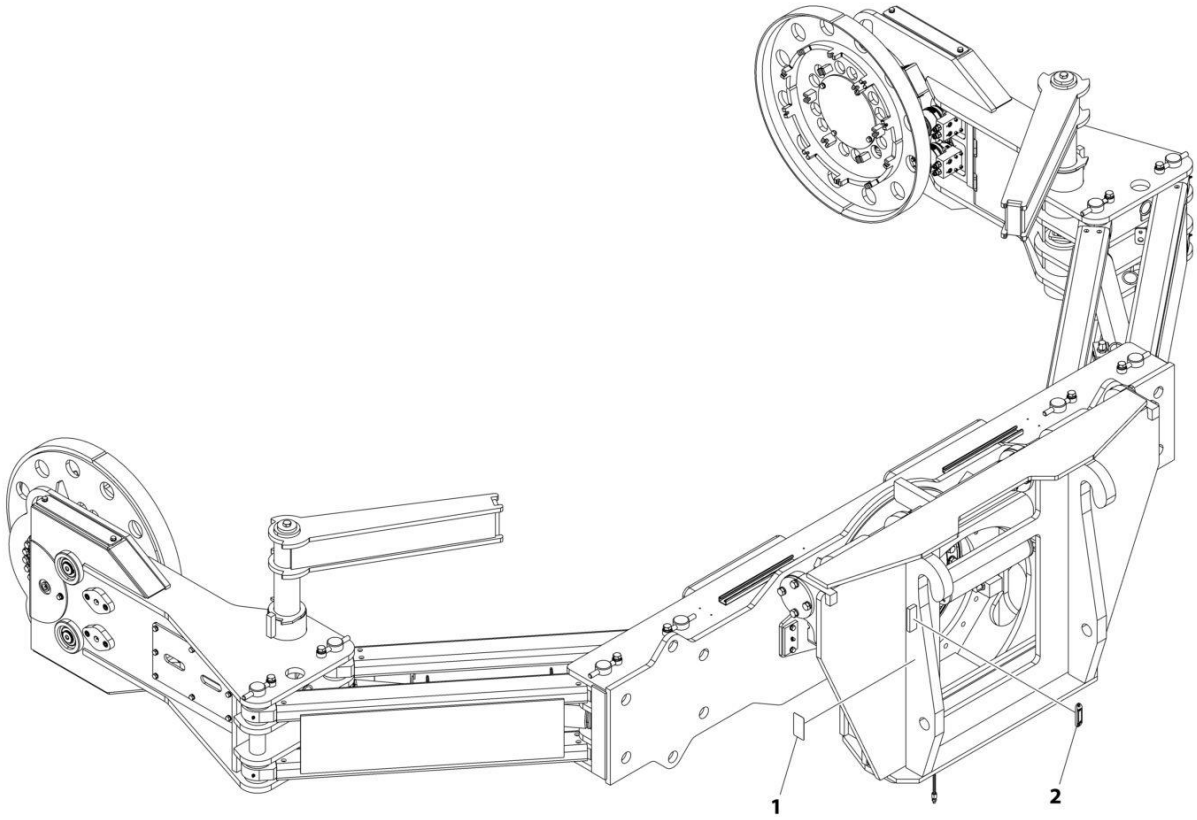

ART_1001207062

FIGURE 3-25. TIRE HANDLER INSTALLATION (6800KG)

ITEM	PART NUMBER	QTY	DESCRIPTION	REV
	1001207062	Ref	TIRE HANDLER INSTALLATION (6800KG)	A
1	See Note	NSS	SN Plate (Note:Stamped Part - Not Available for Purchase)	
2	1001227670	1	Tag, RFID	

SECTION 4 - ENGINE AND ATTACHING PARTS

FIGURE 4-1. ENGINE MOUNT INSTALLATION

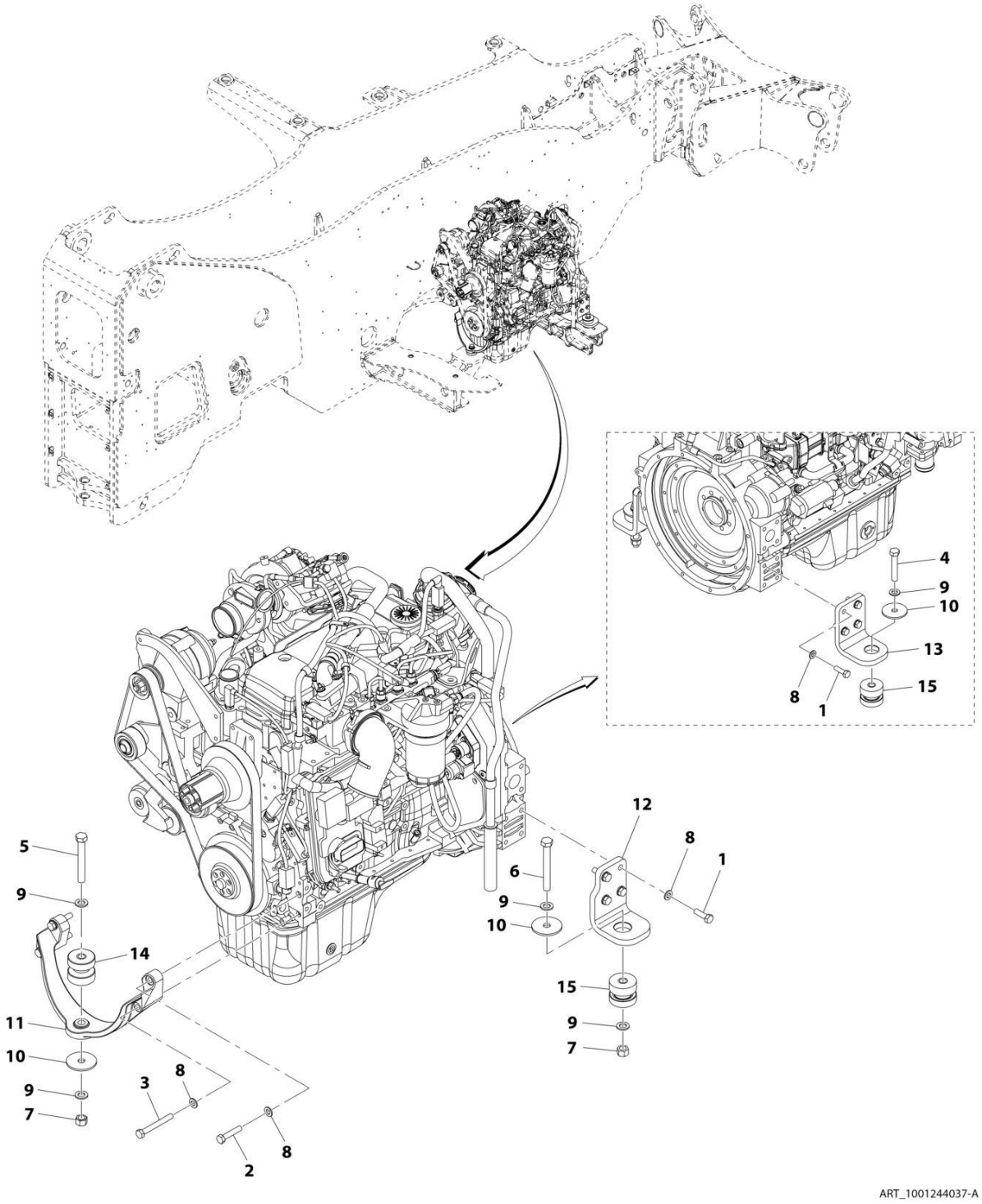

FIGURE 4-1. ENGINE MOUNT INSTALLATION

ITEM	PART NUMBER	QTY	DESCRIPTION	REV
	1001244037	Ref	Engine Mount Installation	A
1	0701216	8	Bolt, M12X40	
2	0701220	2	Bolt, M12X60	
3	0701227	2	Bolt, M12X100	
4	0711626	1	Bolt, M16X90	
5	0711629	1	Bolt, M16X120	
6	0711630	1	Bolt, M16X130	
7	3331615	1	Nut, M16	
8	4812100	2	Washer, M12	
9	4812300	12	Washer, M16	
10	7300435	5	Washer	
11	1001160116	3	Bracket, Engine	
12	1001238820	1	Plate, Engine Mount	
13	1001238821	1	Plate, Engine Mount	
14	1001188757	1	Mount, Isolator Engine	
15	1001197072	2	Mount, Isolator Engine	

FIGURE 4-2. CUMMINS ENGINE, QSB 4.5L (2733)

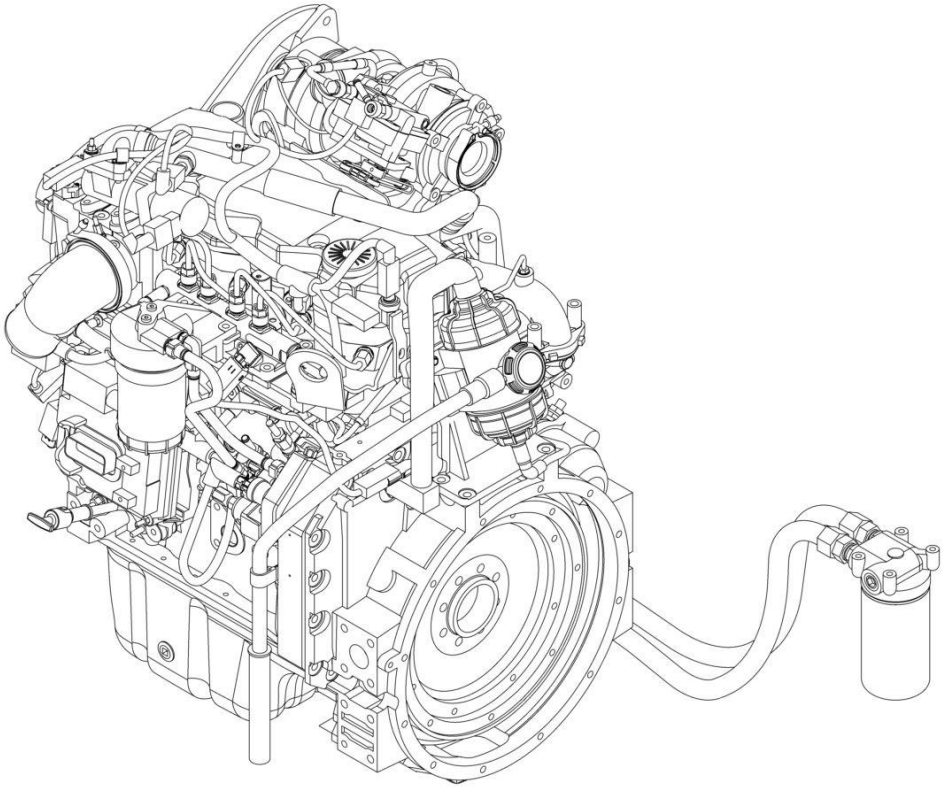

ART_1001274337

FIGURE 4-2. CUMMINS ENGINE, QSB 4.5L (2733)

ITEM	PART NUMBER	QTY	DESCRIPTION	REV
	1001274337	Ref	CUMMINS ENGINE, QSB 4.5L	B
	70026248	1	Filter After Treatment Kit	
	N.S.S.	1	Filter Screen	
	N.S.S.	1	Filter Support	
	N.S.S.	1	Filter Service Tool	
	70026247	1	Cap, Filter After treatment	
	70026244	1	Connector, Male (Inlet)	
	70026245	1	Connector, Male (Outlet)	
		Ref	Crankcase Breather	
		Ref	Breather Tube and Seal	
	70024284	1	Vent Filter, Crankcase	
	70025351	1	Pressure Sensor	
		Ref	Idler Pulley Kit	
		Ref	Support, Idler Pulley	
	70023443	1	Block Heater Staring Aid, (includes o-ring)	
	1001195923	1	Block Heater Cordset	
		Ref	Fuel Drain Hose Coupling	
	7029128	1	Sealing Washer	
		Ref	Alternator	
		Ref	Pulley, Alternator	
		Ref	Support, Alternator	
		Ref	Brace, Alternator	
	1322073	1	Pulley, Fan	
	7028938	1	Fan Support Kit	
	70029919	1	Fan Spacer	
	70028450	1	Fuel Filter Assembly	

FIGURE 4-3. CUMMINS ENGINE, QSB 4.5L (12010)

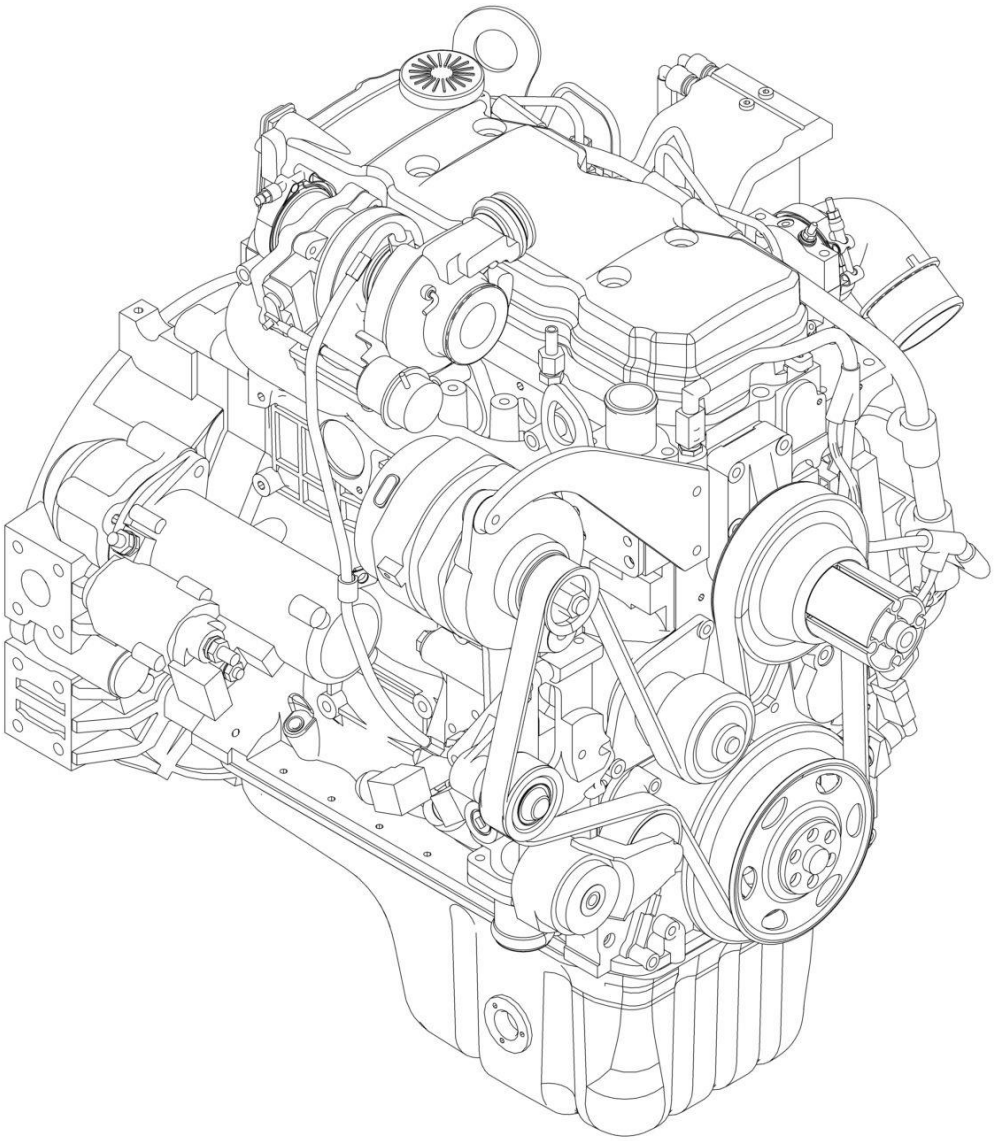

ART_1001255278

FIGURE 4-3. CUMMINS ENGINE, QSB 4.5L (12010)

ITEM	PART NUMBER	QTY	DESCRIPTION	REV
	1001255278	Ref	ENGINE, QSB 4.5L LRC	B
	70026533	1	Starting Aid Assembly	
	70030164	1	Support, Idler Pulley	
	70023443	1	Engine Heater with O-Ring	
	1001195923	1	Heater Cable	
	70024313	1	Thermostat Kit (Includes O-Ring)	
	70030316	1	Valve, Check	
	70030167	1	Pulley, Alternator	
	70030168	1	Support, Alternator	
	70030169	1	Brace, Alternator	
	1322073	1	Pulley, Fan	
	7028938	1	Fan Support	
	70029919	1	Spacer, Fan Pilot	
	1322181	4	Screw	
	70026557	1	Tube, Fuel Supply	
	70022641	1	Fuel Filter Head with Fittings	
	70020348	1	Secondary Fuel Filter	
	70030146	1	Oil Seal, Rear Main	
	70021795	1	Flywheel	
	70021794	1	Fuel Injection Pump	
	1321797	1	Gasket, Cover Plate	
	70029430	1	Pipe, Air Transfer	
	70029431	1	O-Ring, Air Transfer	
	70029429	1	Clamp, V Band	
	70020358	1	Oil Filter	
	70020351	1	Dipstick Tube	
	70030310	1	Alternator	
	70030311	1	Dipstick	
	70030312	2	Pan, Oil	
	70022637	1	Oil Pan Plug Gasket	
	70024317	1	Oil Pan Valve	
	70022845	1	Gasket, Oil Pan Valve	
	70030313	1	Plug	
	70030315	1	Tensioner, Belt	
	1001128594	1	Starter	
	77384830	1	V-Band Clamp, Exhaust Outlet Connection	
	70030314	1	Coupling	
	70021805	1	Water Pump	
	70021806	1	Water Pump Gaskett	

FIGURE 4-4. AIR CLEANER LINES INSTALLATION (2733)

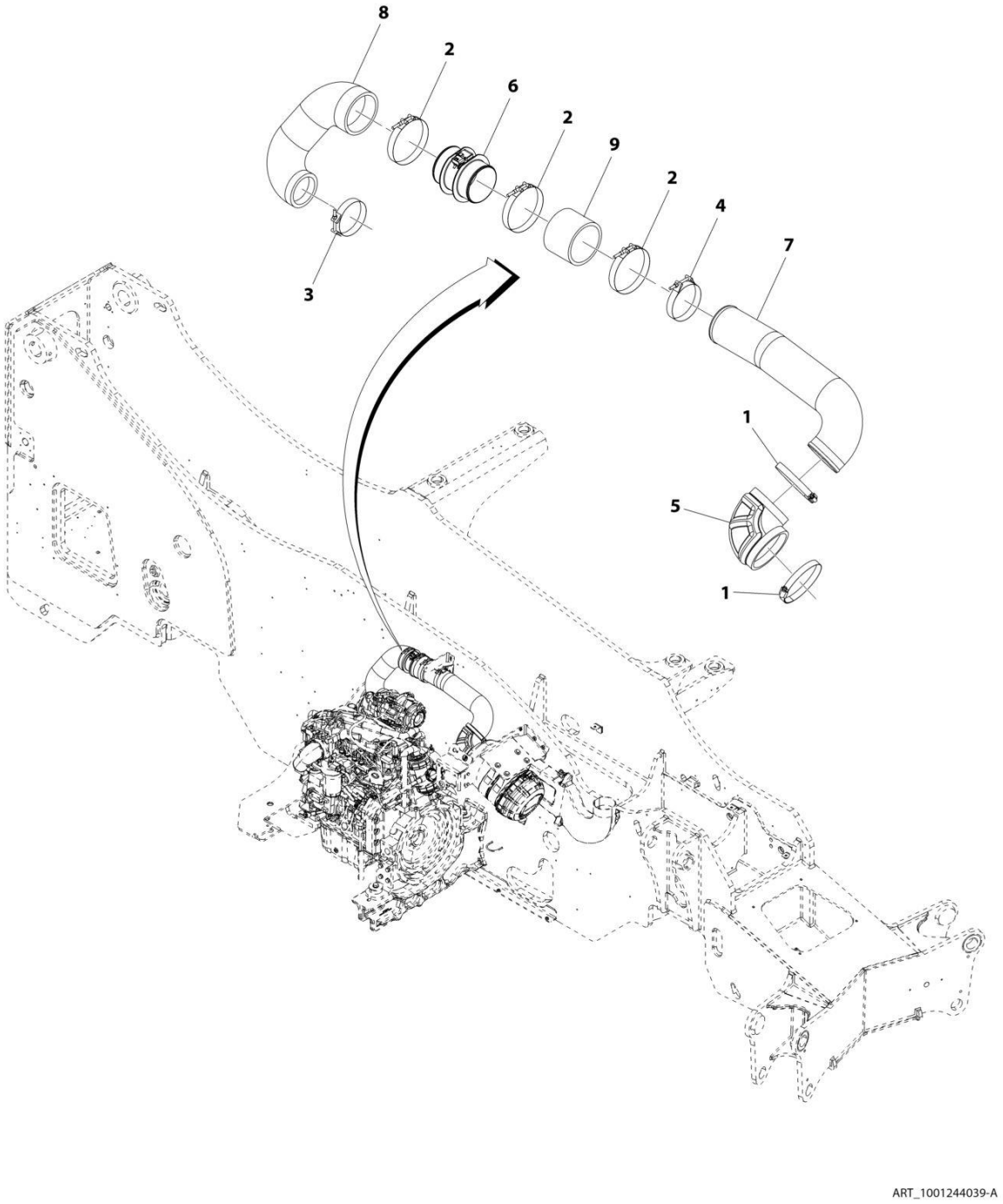

FIGURE 4-4. AIR CLEANER LINES INSTALLATION (2733)

ITEM	PART NUMBER	QTY	DESCRIPTION	REV
	1001244039	Ref	Air Cleaner Lines Installation	A
1	8405402	2	Clamp	
2	80933367	3	Clamp	
3	90028631	1	Clamp	
4	91413025	1	Clamp	
5	1001166451	1	Elbow	
6	1001168771	1	Tube	
7	1001241370	1	Tube	
8	1001243775	1	Hose	
9	1001247094	1	Hose	

FIGURE 4-5. AIR INTAKE LINES INSTALLATION (12010)

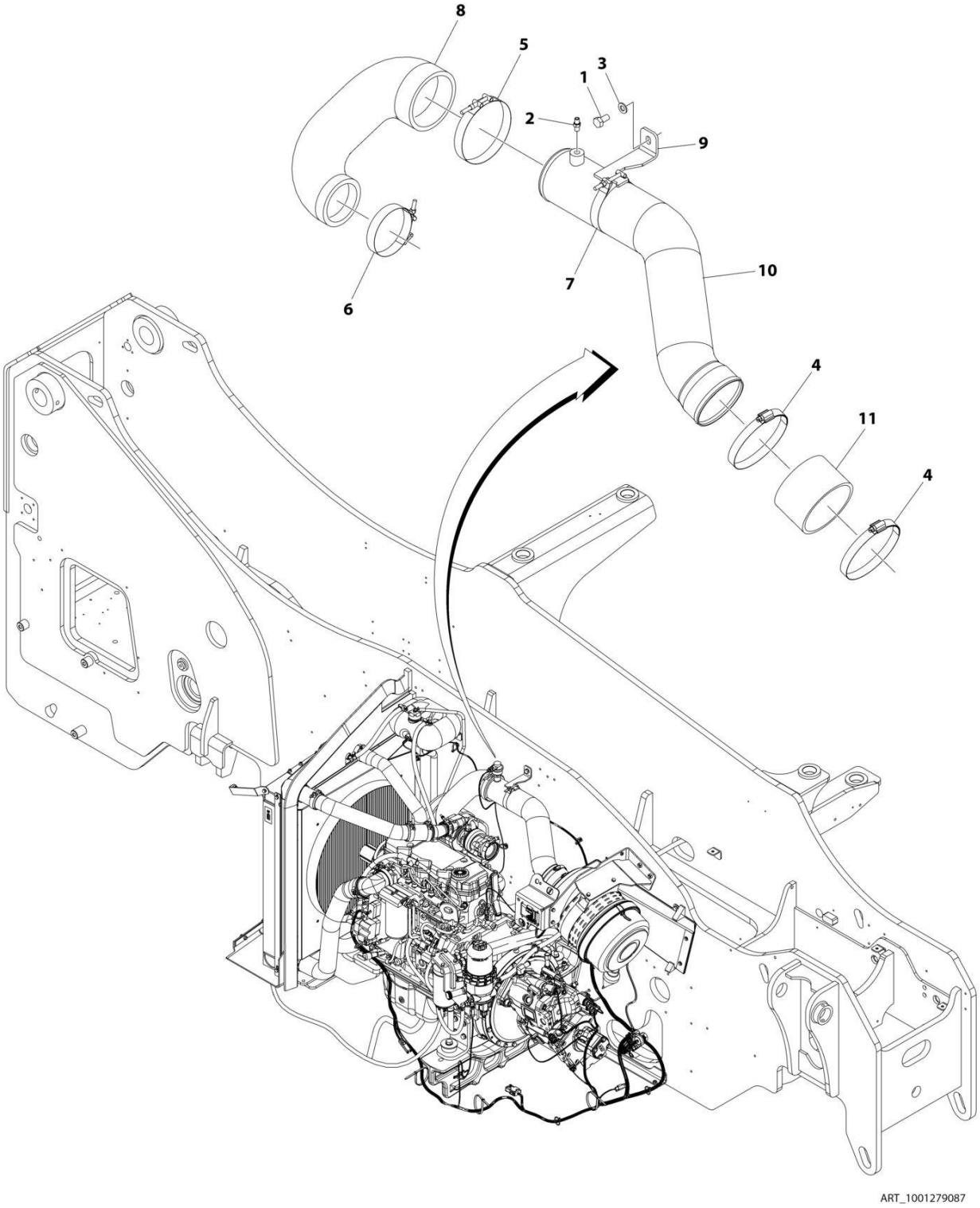

FIGURE 4-5. AIR INTAKE LINES INSTALLATION (12010)

ITEM	PART NUMBER	QTY	DESCRIPTION	REV
	1001279087	Ref	AIR INTAKE LINES INSTALLATION	A
1	0761010	1	Bolt M10 x 20	
2	2180104	1	Fitting, Straight	
3	4812000	1	Washer M10	
4	8405402	2	Clamp	
5	80933367	1	Clamp	
6	90028631	1	Clamp	
7	91413025	1	Clamp	
8	1001243775	1	Hose	
9	1001256718	1	Support	
10	1001279089	1	Tube	
11	1001279096	1	Sleeve	

FIGURE 4-6. AIR CLEANER INSTALLATION (2733)

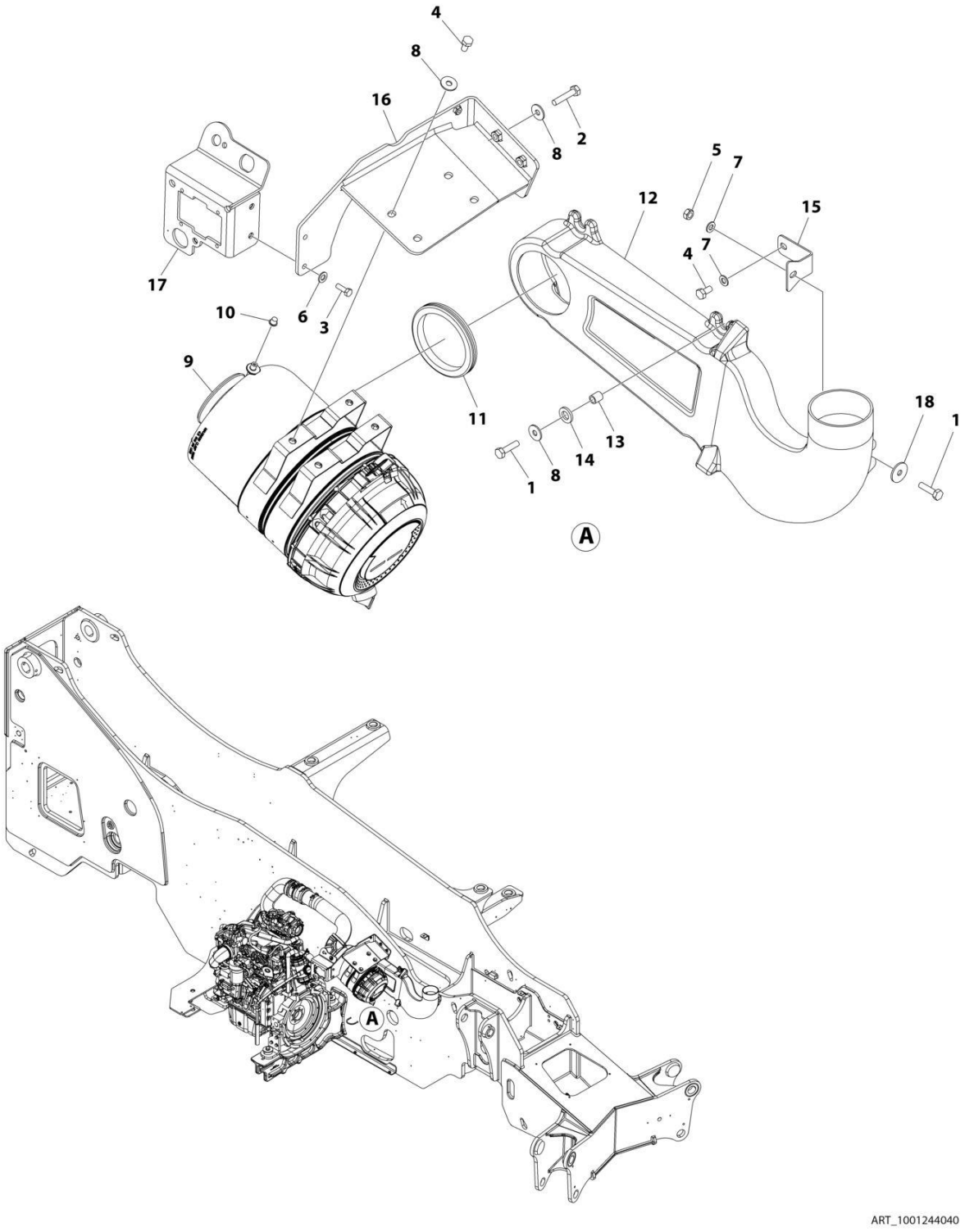

FIGURE 4-6. AIR CLEANER INSTALLATION (2733)

ITEM	PART NUMBER	QTY	DESCRIPTION	REV
	1001244040	Ref	AIR CLEANER INSTALLATION	C
1	0701016	5	Bolt M10 x 40	
2	0701018	3	Bolt M10 x 50	
3	0760812	2	Bolt M8 x 25	
4	0761010	5	Bolt M10 x 20	
5	3291001	1	Nut M10 x 1.5	
6	4811900	2	Washer M8	
7	4812000	2	Washer M10	
8	4812002	11	Washer M10	
9	1001166565	1	Filter, Air Cleaner (See Separate Breakdown in this Section)	
10	1001183177	1	Cap	
11	1001183831	1	Grommet	
12	1001216813	1	Duct	
13	1001231389	4	Sleeve, Spacer	
14	1001231390	4	Washer	
15	1001244442	1	Bracket	
16	1001245277	1	Bracket	
17	1001245283	1	Plate	
18	1001155540	1	Washer	

FIGURE 4-7. AIR CLEANER INSTALLATION (12010)

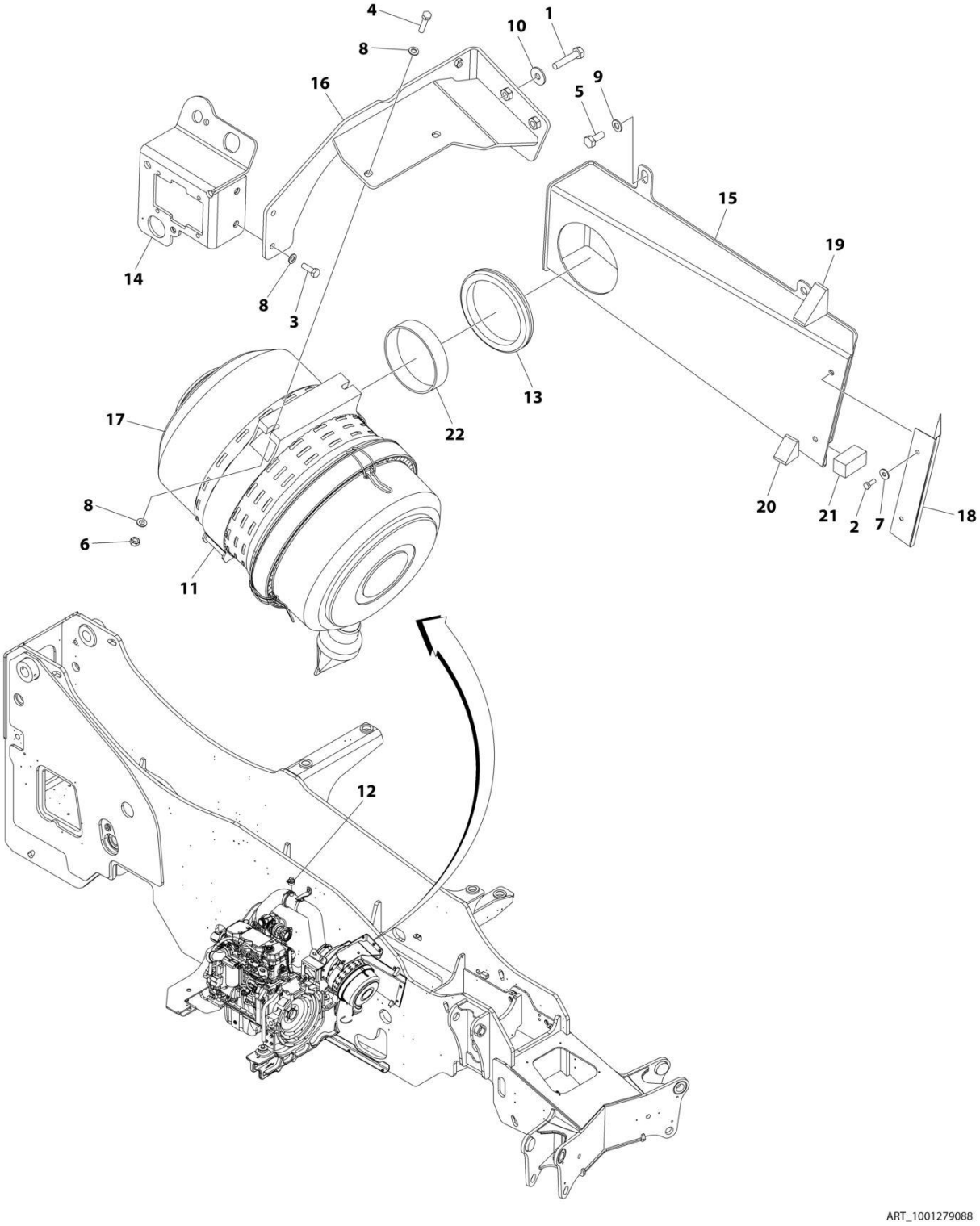

FIGURE 4-7. AIR CLEANER INSTALLATION (12010)

ITEM	PART NUMBER	QTY	DESCRIPTION	REV
	1001279088	Ref	AIR CLEANER INSTALLATION	A
1	0701018	3	Bolt M10 x 50	
2	0760608	2	Bolt M6 x 16	
3	0760812	2	Bolt M8 x 25	
4	0760815	2	Bolt M8 x 35	
5	0761012	3	Bolt M10 x 25	
6	3290801	2	Nut M8	
7	4811702	2	Washer M6	
8	4811900	6	Washer M8	
9	4812000	3	Washer M10	
10	4812002	3	Washer M10	
11	1001130443	1	Clamp	
12	1001166715	1	Indicator, Restriction	
13	1001183831	1	Grommet	
14	1001245283	1	Plate	
15	1001279090	1	Duct	
16	1001279093	1	Bracket	
17	1001279128	1	Filter, Air Cleaner (See Separate Breakdown in this Section)	
18	1001279682	1	Plate	
19	1001280354	1	Seal	
20	1001280355	1	Seal	
21	1001280381	1	Seal	
22	1001280666	1	Seal	

FIGURE 4-8. AIR CLEANER FILTER ASSEMBLY (90/100KW - 2733)

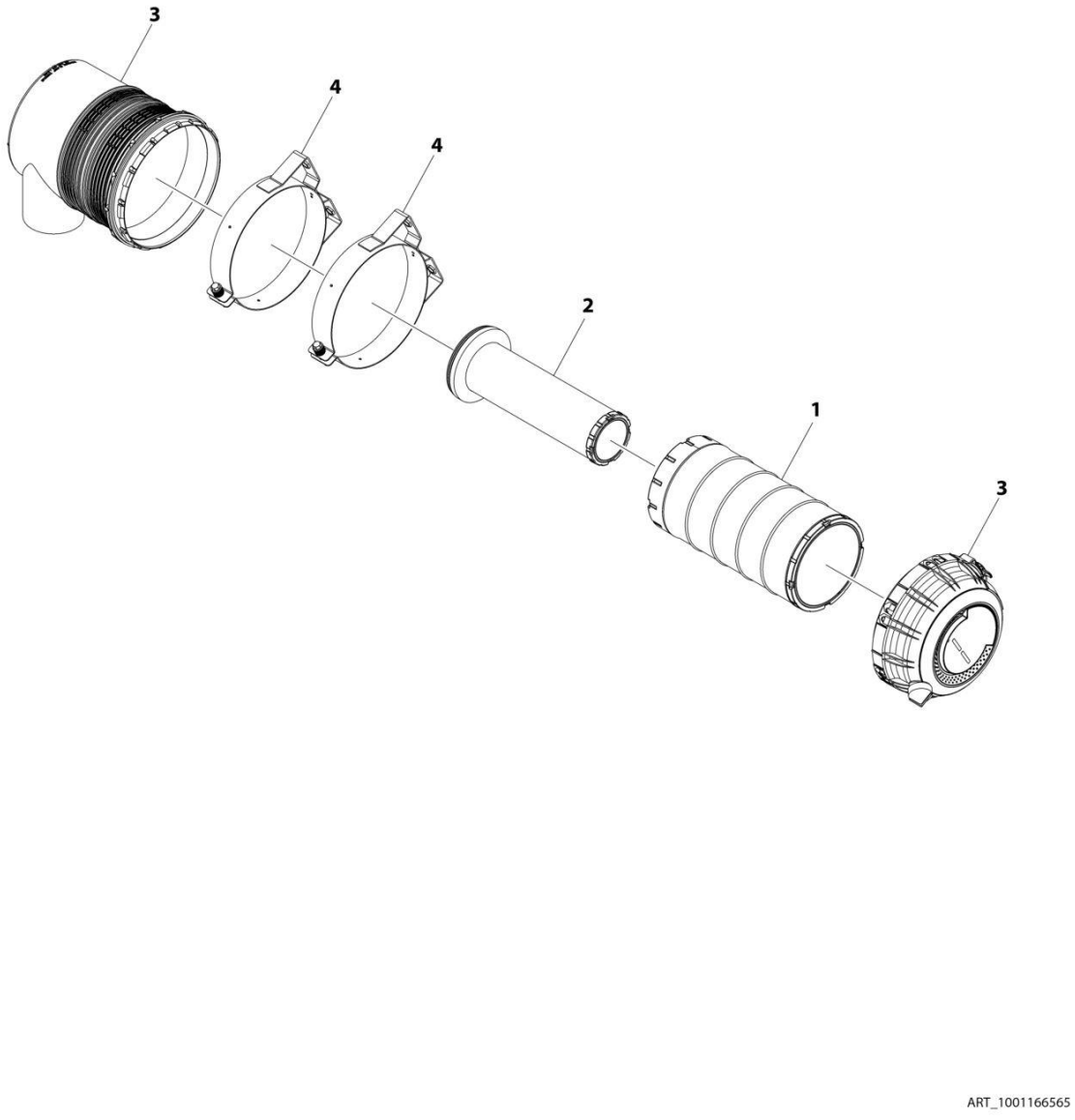

FIGURE 4-8. AIR CLEANER FILTER ASSEMBLY (90/100KW - 2733)

ITEM	PART NUMBER	QTY	DESCRIPTION	REV
	1001166565	Ref	AIR FILTER ASSEMBLY (90/100KW)	F
1	70025850	1	Filter, Cylindrical Air Primary	
2	70025851	1	Filter, Cylindrical Air Secondary	
3	70026395	1	Cover	
4	70026396	2	Bracket	

FIGURE 4-9. AIR CLEANER FILTER ASSEMBLY (12010)

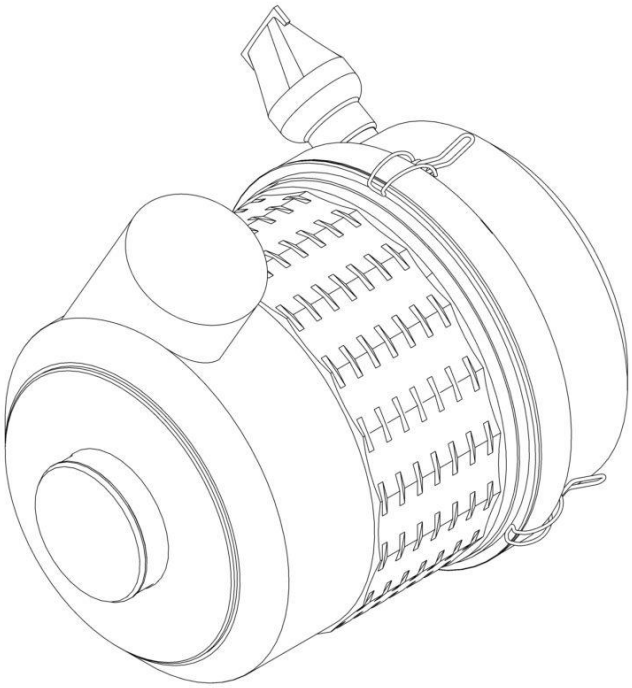

ART_1001279128

FIGURE 4-9. AIR CLEANER FILTER ASSEMBLY (12010)

ITEM	PART NUMBER	QTY	DESCRIPTION	REV
	1001279128	Ref	AIR CLEANER FILTER ASSEMBLY	A
		Ref	Note: No Service Parts Available at Time of Printing.	

FIGURE 4-10. AIR FILTER, RAIN CAP INSTALLATION

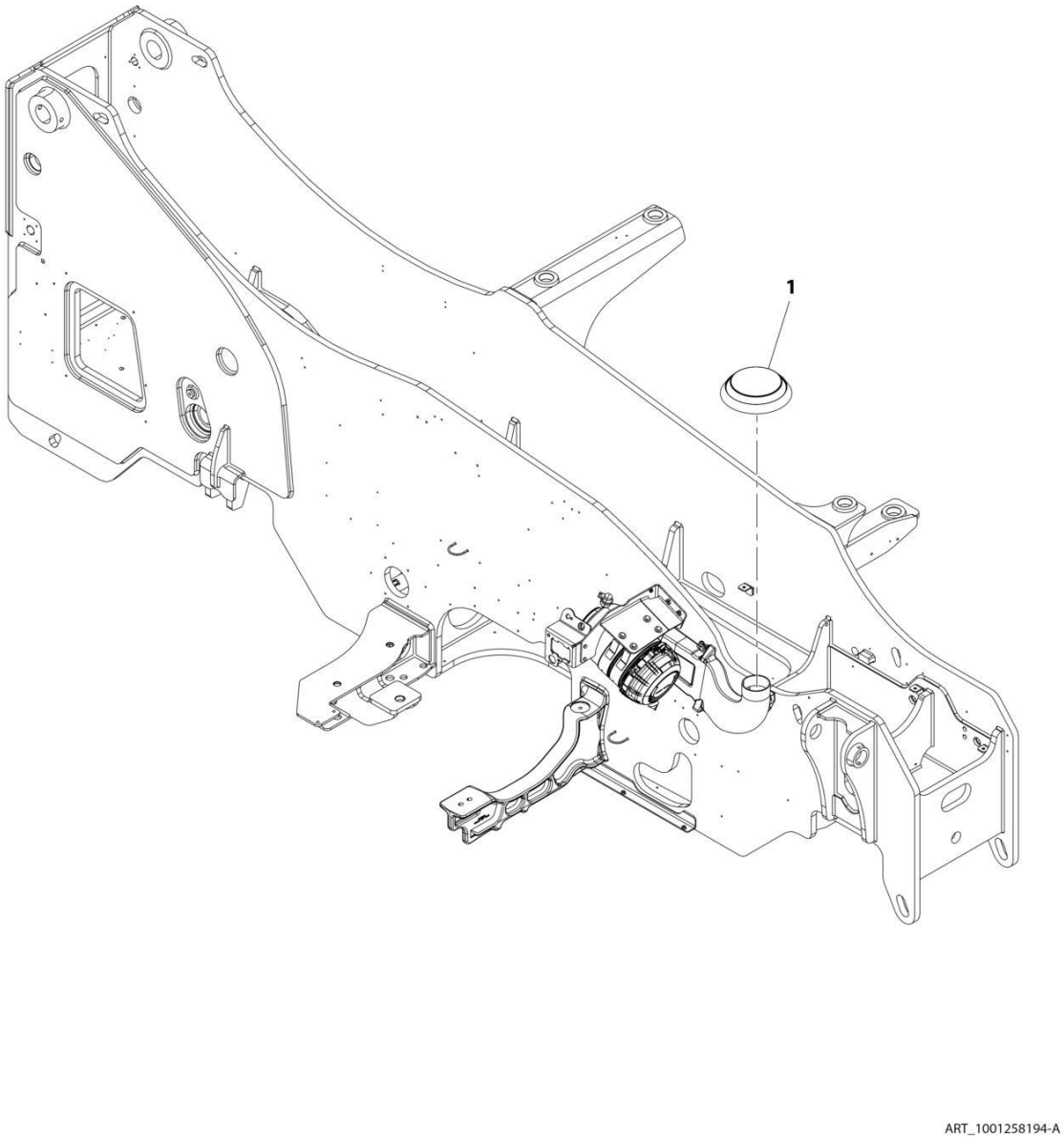

FIGURE 4-10. AIR FILTER, RAIN CAP INSTALLATION

ITEM	PART NUMBER	QTY	DESCRIPTION	REV
	1001258194	Ref	Air Filter, Rain Cap Installation	A
1	90200849	1	Air Stack Cap	

FIGURE 4-11. PRE-CLEANER, AIR FILTER INSTALLATION

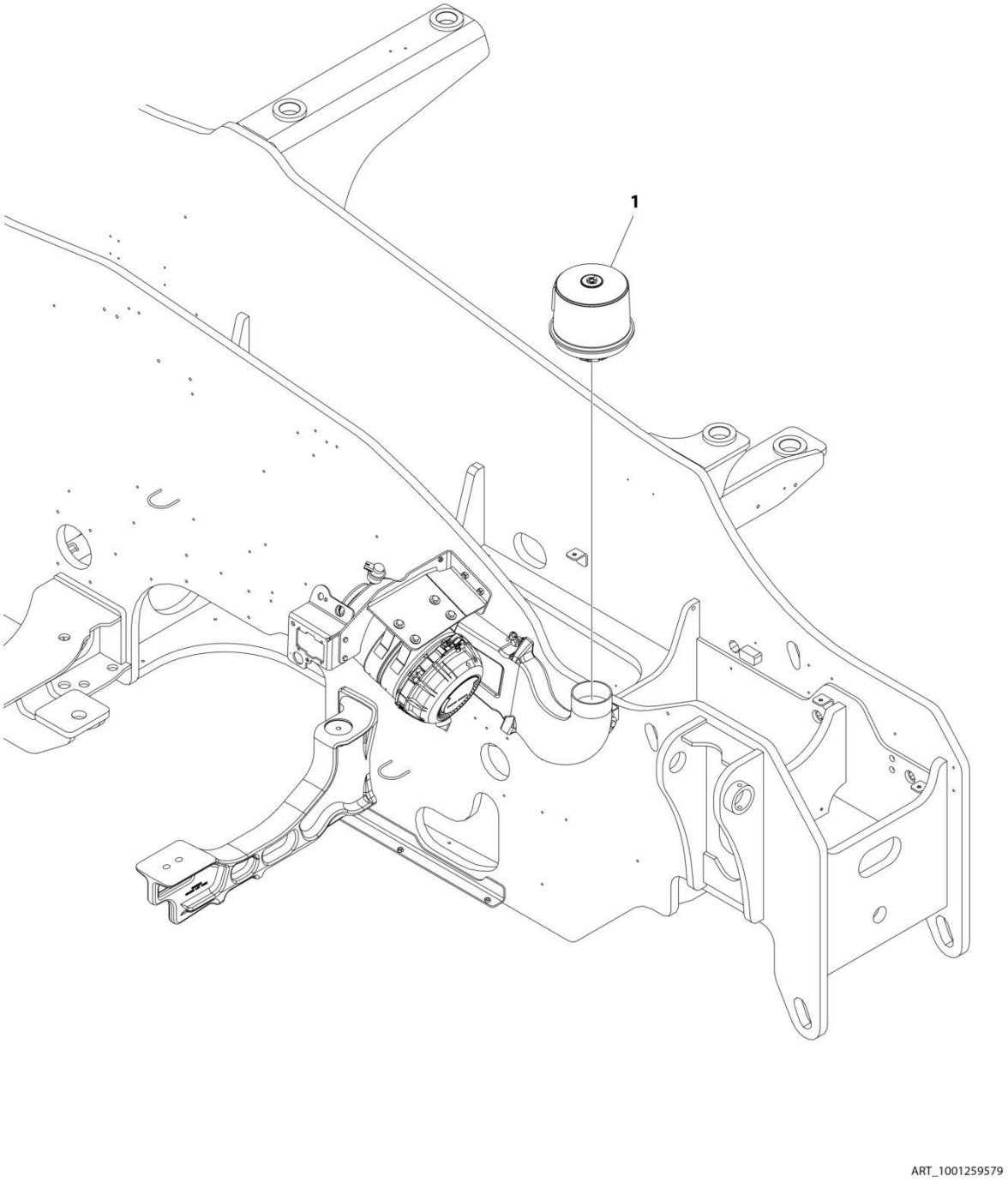

FIGURE 4-11. PRE-CLEANER, AIR FILTER INSTALLATION

ITEM	PART NUMBER	QTY	DESCRIPTION	REV
	1001259579	Ref	AIR PRE-CLEANER FILTER INSTALLATION	A
1	1001092771	1	Topspin, Pre-cleaner Accessory	

FIGURE 4-12. FUEL FILTER INSTALLATION (2733)

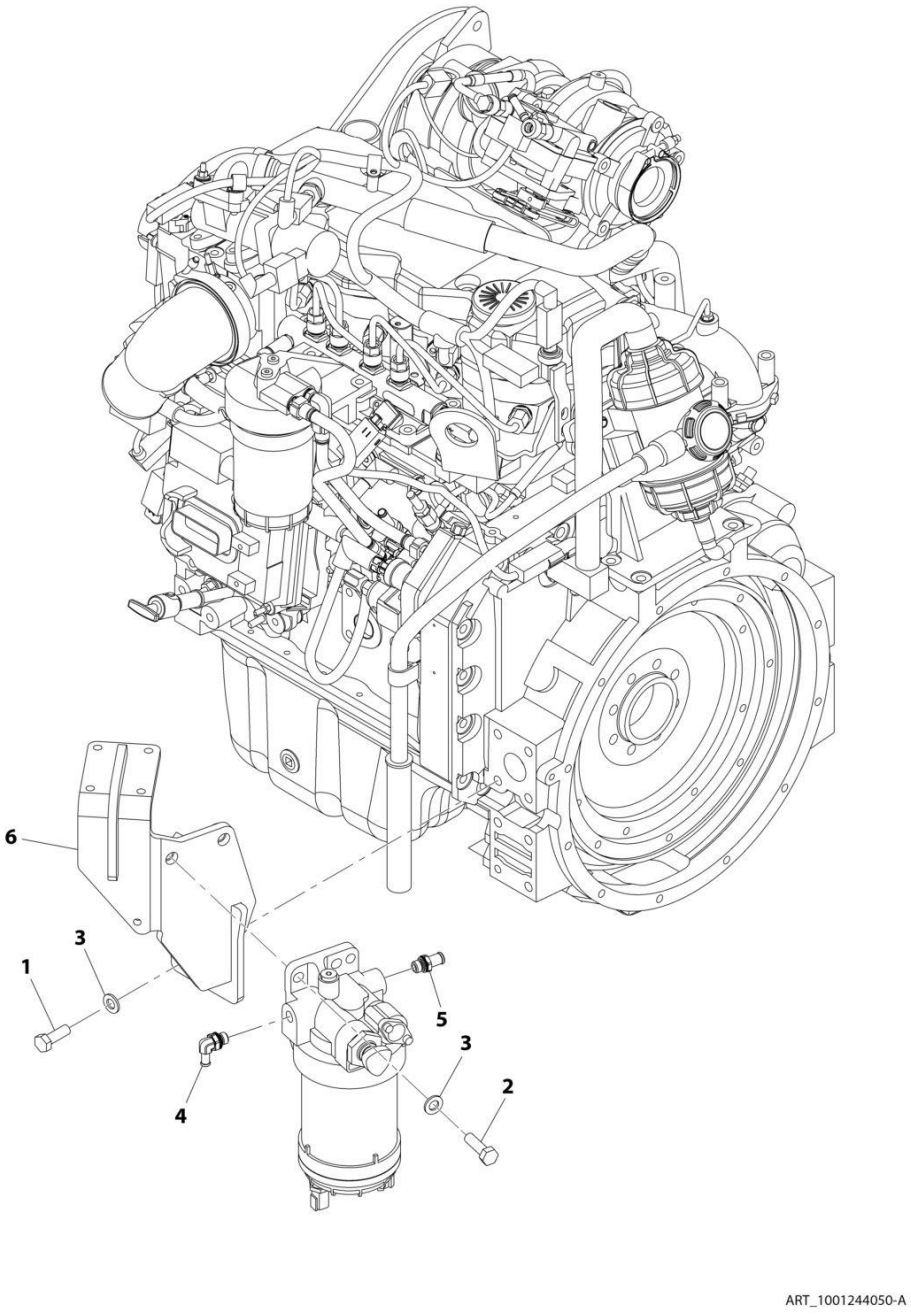

FIGURE 4-12. FUEL FILTER INSTALLATION (2733)

ITEM	PART NUMBER	QTY	DESCRIPTION	REV
	1001244050	Ref	Primary Fuel Filter Installation	A
1	0701215	4	Bolt, M12X35	
2	0701216	2	Bolt, M12X40	
3	4812100	6	Washer, M12	
4	1001182094	1	Hose, Barb	
5	1001217467	1	Adapter	
6	1001242340	1	Bracket	

FIGURE 4-13. FUEL FILTER INSTALLATION (12010)

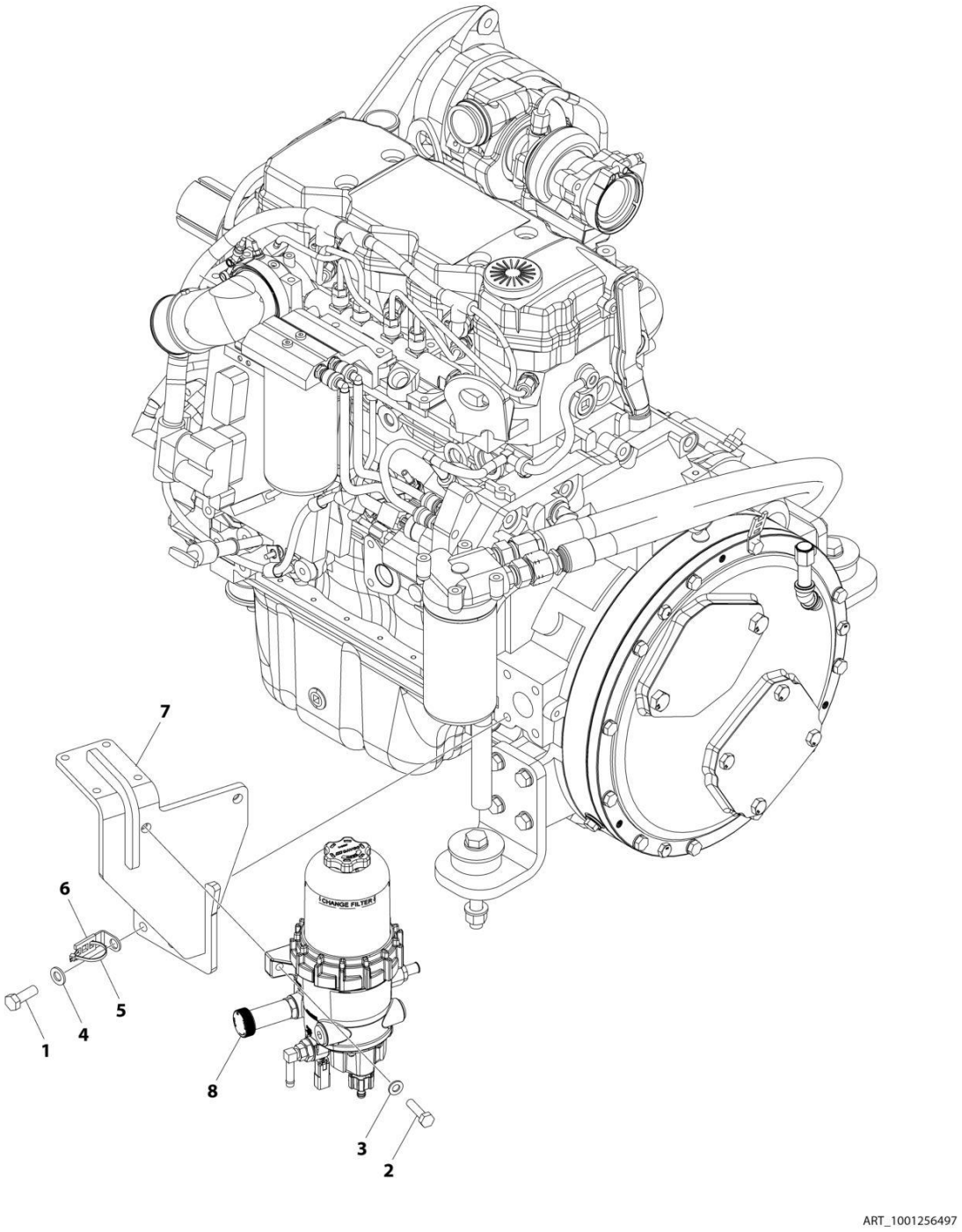

FIGURE 4-13. FUEL FILTER INSTALLATION (12010)

ITEM	PART NUMBER	QTY	DESCRIPTION	REV
	1001256497	Ref	FUEL FILTER INSTALLATION	A
1	0701215	4	Bolt M12 x 35	
2	0761016	2	Bolt M10 x 40	
3	4812000	2	Washer M10	
4	4812100	4	Washer M12	
5	1001008559	1	Tie-Strap	
6	1001130198	1	Clip	
7	1001256622	1	Bracket	
8	1001256942	1	Fuel Filter & Fittings Assembly (See Separate Breakdown in this Section)	

FIGURE 4-14. FUEL LINES INSTALLATION (2733)

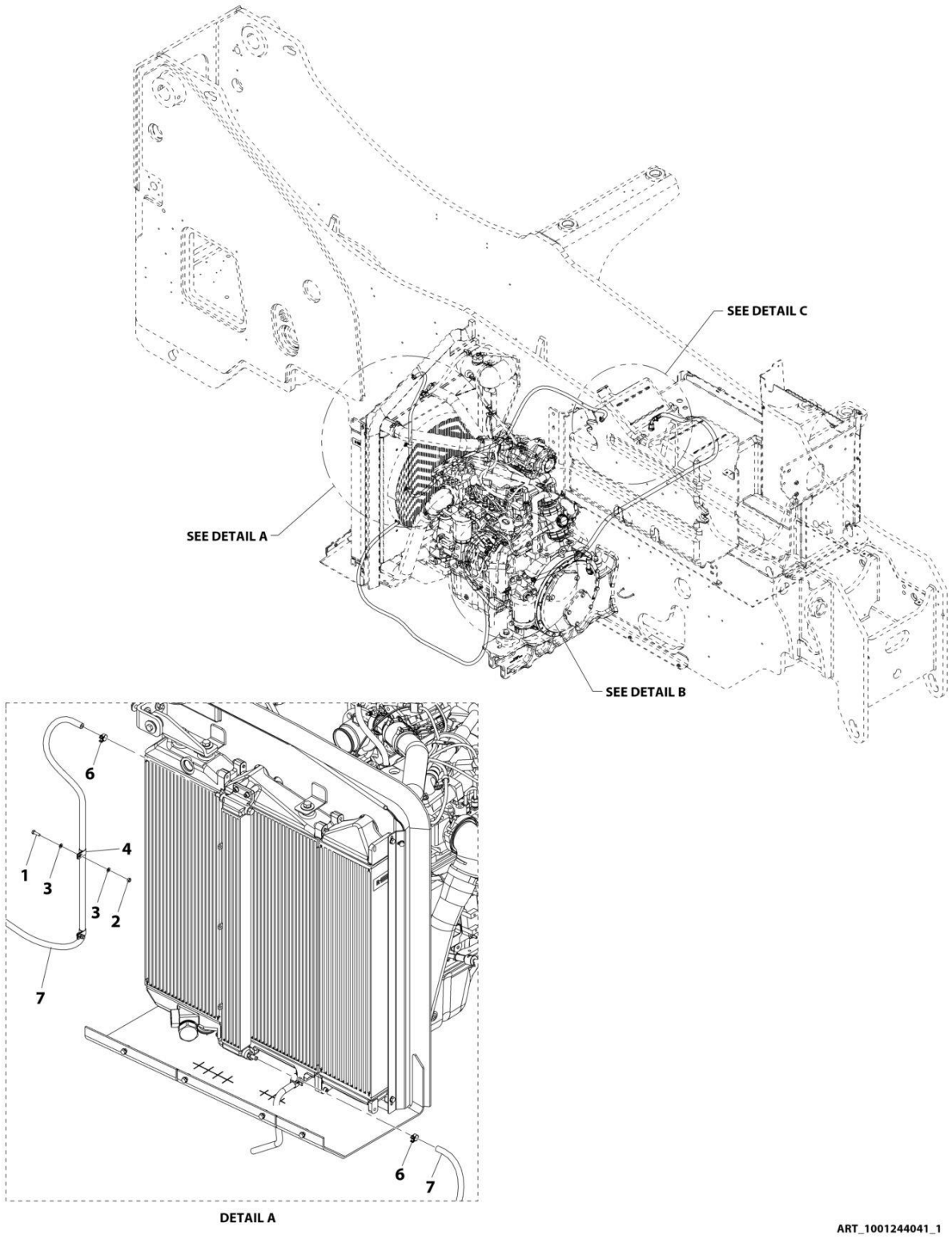

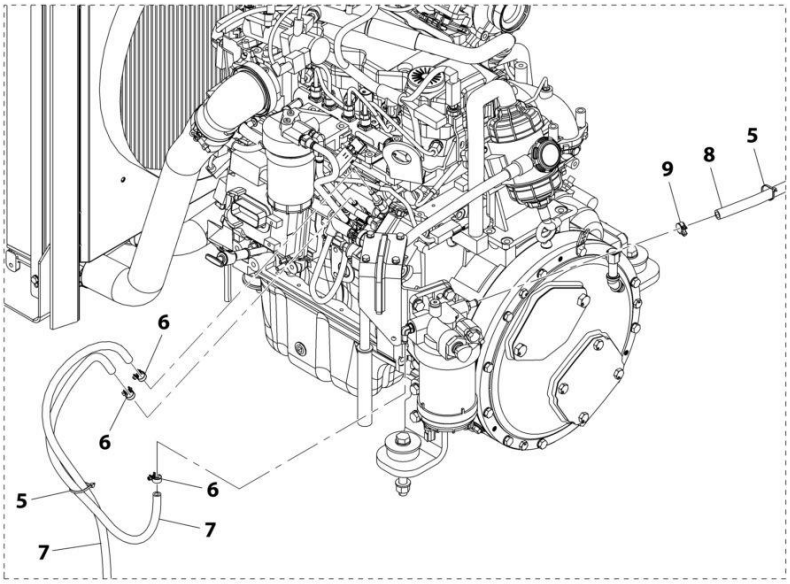

DETAIL B

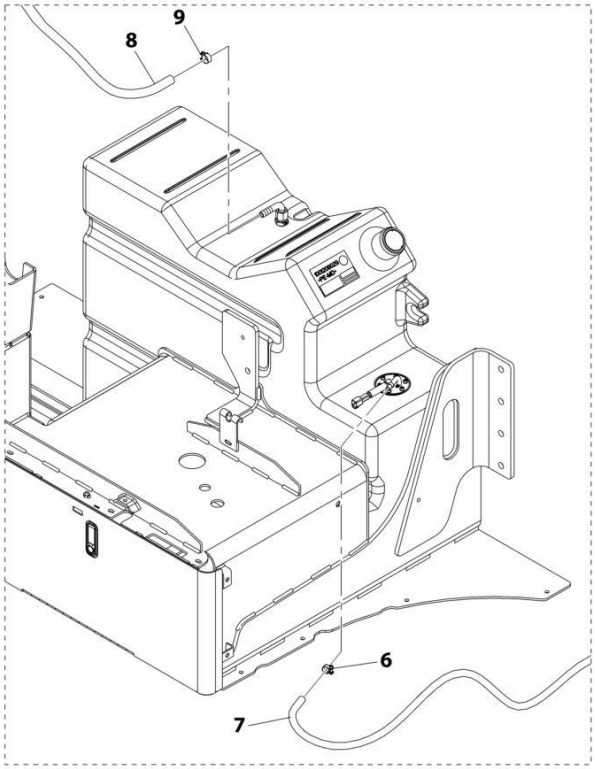

DETAIL C

ART_1001244041_2

FIGURE 4-14. FUEL LINES INSTALLATION (2733)

ITEM	PART NUMBER	QTY	DESCRIPTION	REV
	1001244041	Ref	Fuel Lines Installation	C
1	0700610	2	Bolt, M6X20	
2	3290601	2	Nut, M6X1	
3	4811700	4	Washer, M6	
4	8406112	2	Clip, Tube	
5	1001008559	2	Strap	
6	1001136975	6	Clamp	
7	1001141400	5.7 m	Hose	
8	1001172755	2 m	Hose	
9	1001186342	2	Clip, Hose	

FIGURE 4-15. FUEL INTAKE LINES INSTALLATION (12010)

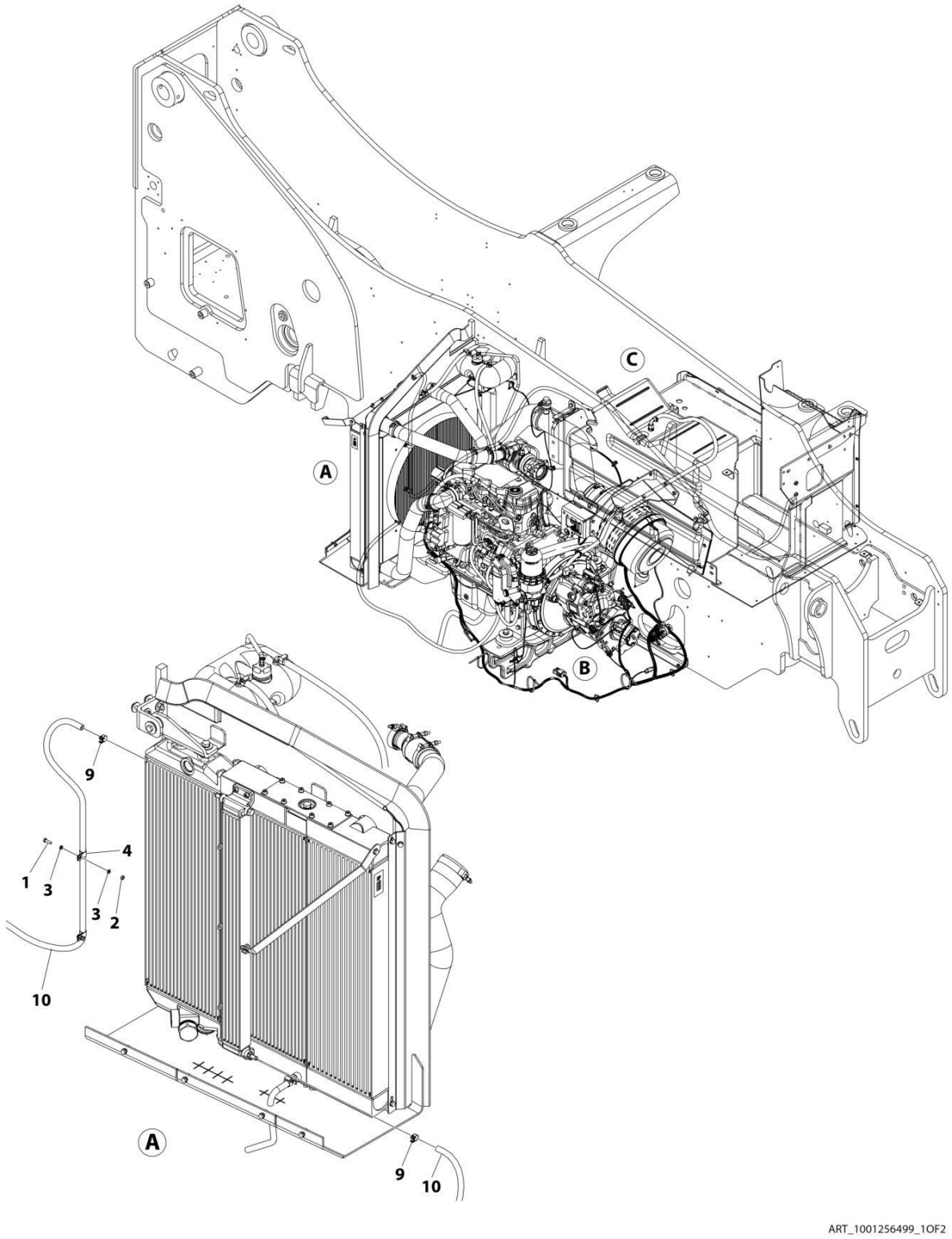

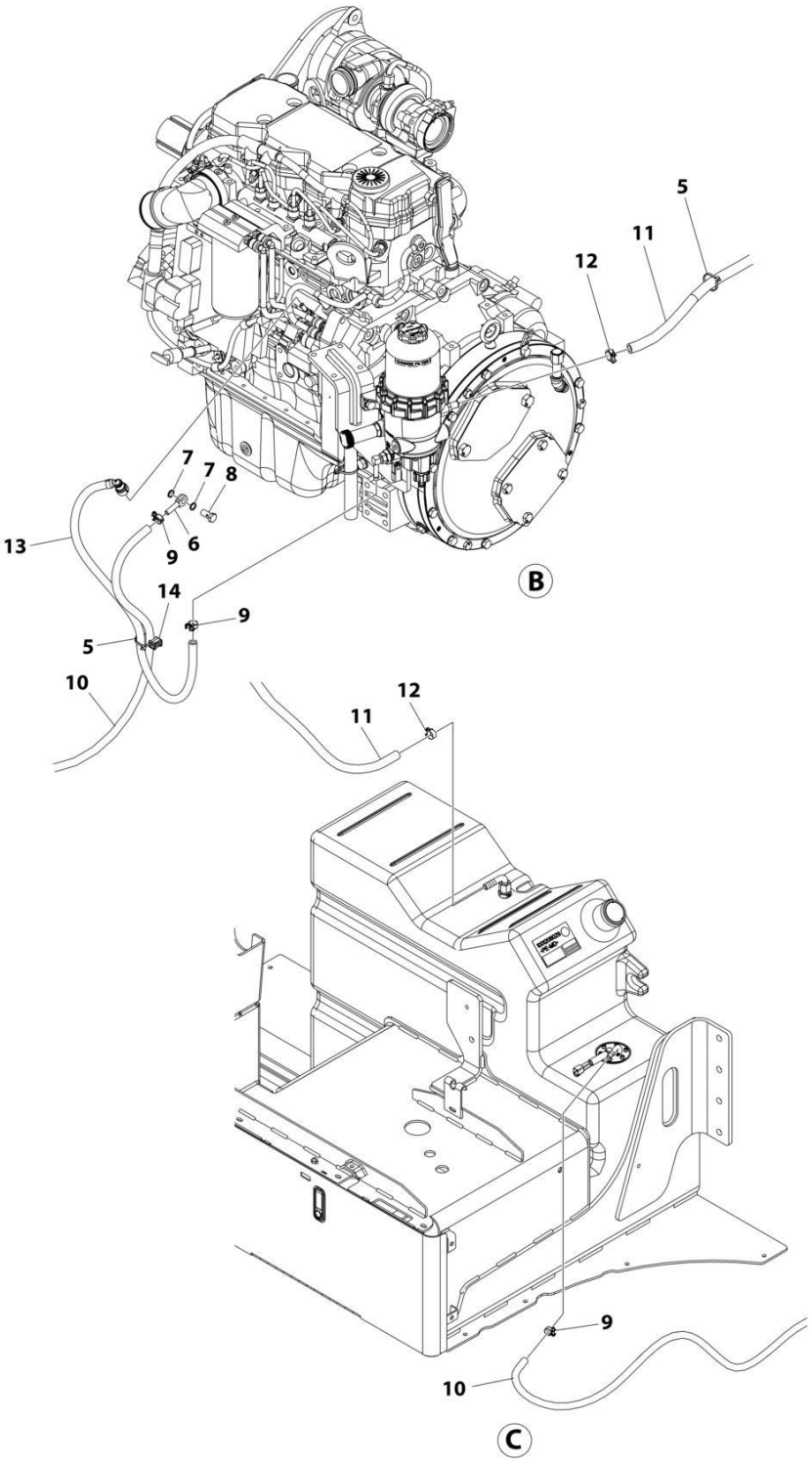

ART_1001256499_2OF2

FIGURE 4-15. FUEL INTAKE LINES INSTALLATION (12010)

ITEM	PART NUMBER	QTY	DESCRIPTION	REV
	1001256499	Ref	FUEL INTAKE LINES INSTALLATION	A
1	0700610	2	Bolt M6 x 20	
2	3290601	2	Nut M6	
3	4811700	4	Washer M6	
4	8406112	2	Clip, Tube	
5	1001008559	2	Tie-Strap	
6	1001105638	1	Fitting, Straight	
7	1001105639	2	Washer	
8	1001105643	1	Screw	
9	1001136975	5	Clamp	
10	1001141400	4.6 m / 15.1 ft	Hose	
11	1001172755	2 m / 6.6 ft	Hose	
12	1001186342	2	Clip, Hose	
13	1001256721	1	Hose	
14	1001004723	1	Clip, Hose	

FIGURE 4-16. HYDROSTATIC DRIVE PUMP INSTALLATION

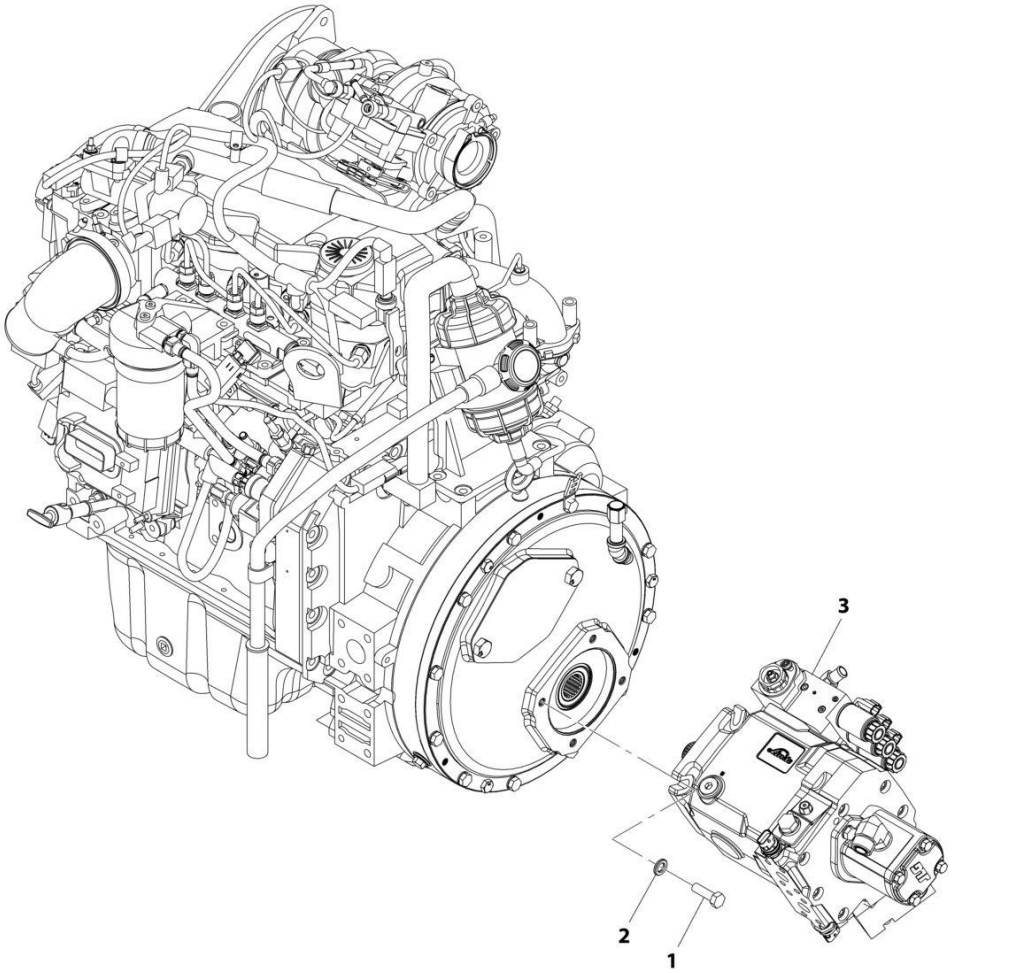

FIGURE 4-16. HYDROSTATIC DRIVE PUMP INSTALLATION

ITEM	PART NUMBER	QTY	DESCRIPTION	REV
	1001244049	Ref	Hydrostatic Drive Pump Installation	B
1	0711216	4	Bolt, M12X40	
2	4740532	4	Washer, M12	
3	1001243013	1	Assembly, Hydrostatic Pump (See Separate Breakdown in this Section)	

FIGURE 4-17. FUEL FILTER & FITTINGS ASSEMBLY (12010)

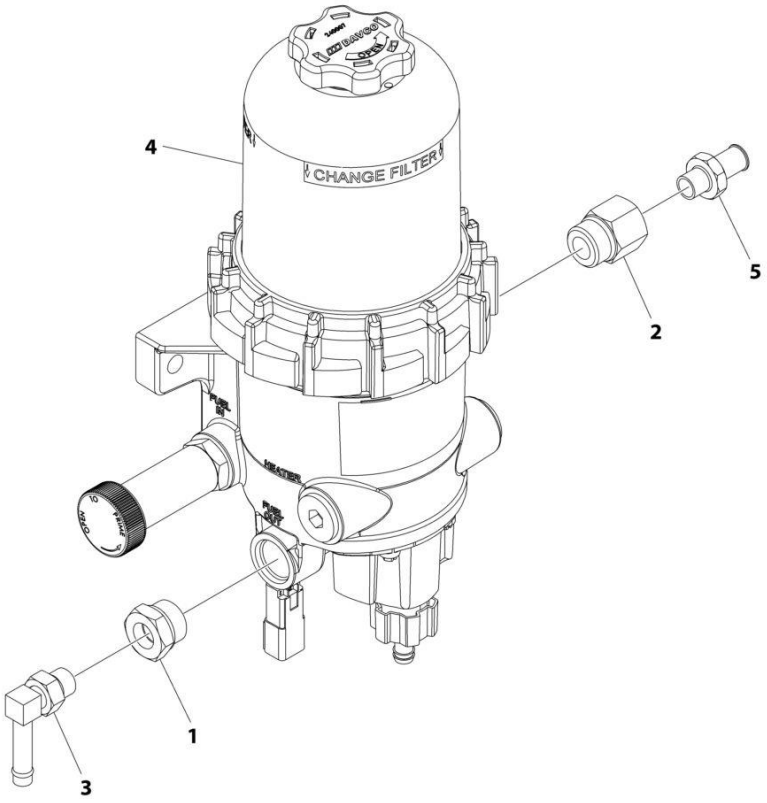

ART_1001256942

FIGURE 4-17. FUEL FILTER & FITTINGS ASSEMBLY (12010)

ITEM	PART NUMBER	QTY	DESCRIPTION	REV
	1001256942	Ref	FUEL FILTER & FITTINGS ASSEMBLY	A
1	2220218	1	Fitting, Straight	
2	2220810	1	Fitting, Straight	
3	8430034	1	Fitting, 90	
4	1001133534	1	Filter, Fuel	
5	1001190631	1	Fitting	

FIGURE 4-18. HYDROSTATIC PUMP ASSEMBLY

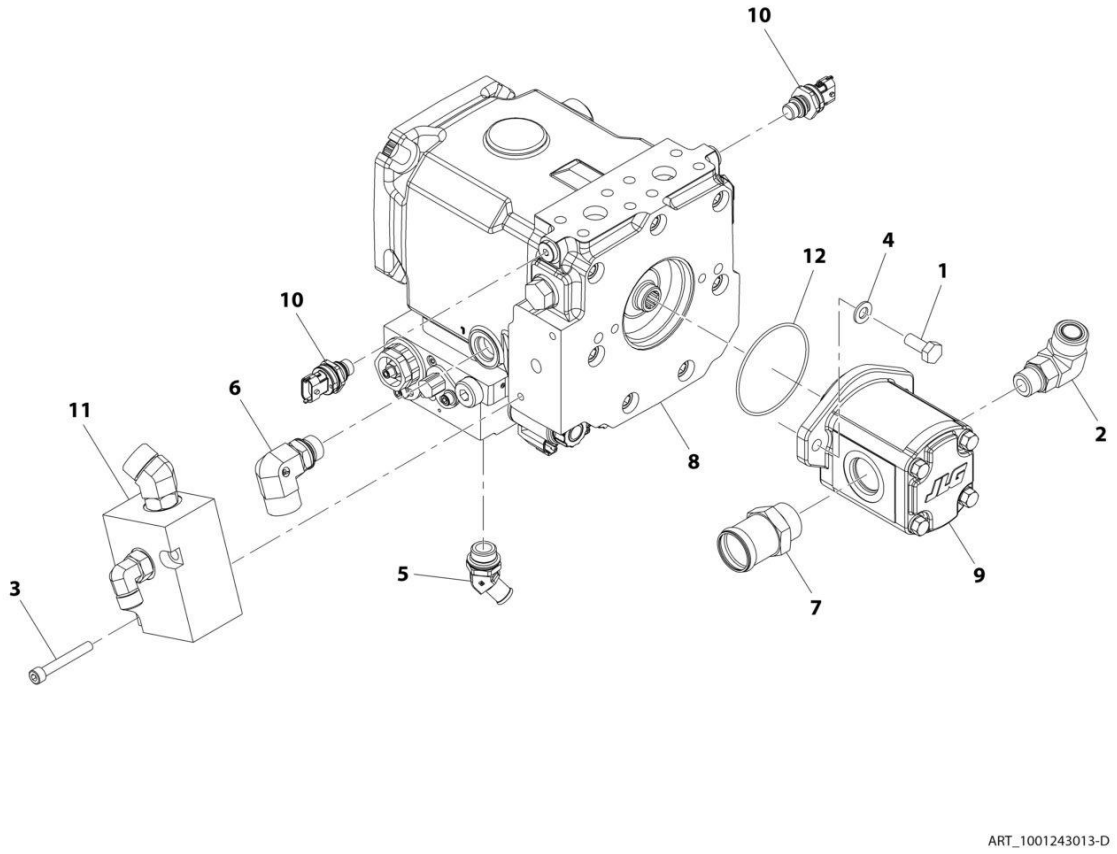

FIGURE 4-18. HYDROSTATIC PUMP ASSEMBLY

ITEM	PART NUMBER	QTY	DESCRIPTION	REV
	1001243013	Ref	Hydrostatic Pump Assembly	D
1	0761012	2	Bolt, M10X25	
2	2131210	1	Fitting, 90 ORFS	
3	4031916	2	Bolt, M8X60	
4	4812000	2	Washer, M10	
5	1001203005	1	Fitting, 45	
6	8770247	1	Fitting, 90 ORFS	
7	1001217930	1	Fitting, Straight ORB	
8	1001242635	1	Pump, Drive (See Separate Breakdown in HYDRAULIC COMPONENTS Section)	
9	1001243724	1	Pump, Charge (See Separate Breakdown in HYDRAULIC COMPONENTS Section)	
10	1001243960	2	Sensor, Pressure Transducer	
11	1001244407	1	Valve, Charge Flow Control Assembly (See Separate Breakdown in HYDRAULIC COMPONENTS Section)	
12	3790152	1	Ring	

FIGURE 4-19. HYDRAULIC PUMP INSTALLATION

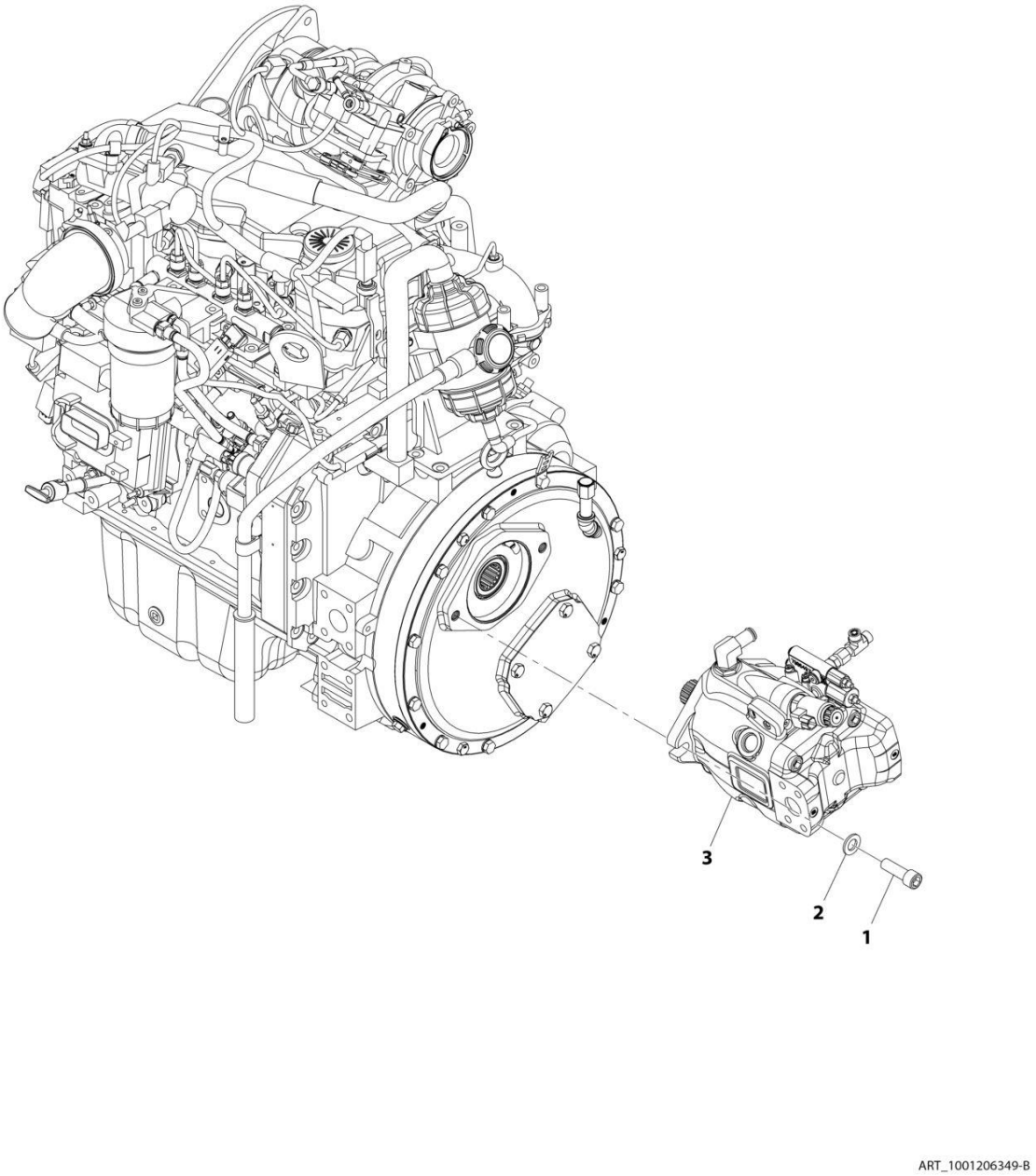

FIGURE 4-19. HYDRAULIC PUMP INSTALLATION

ITEM	PART NUMBER	QTY	DESCRIPTION	REV
	1001206349	Ref	Hydraulic Pump Installation	B
1	4032314	2	Bolt, M16X50	
2	5241600	2	Washer, M16	
3	1001245394	1	Assembly, Implement Pump (See Separate Breakdown in this Section)	

FIGURE 4-20. IMPLEMENT PUMP ASSEMBLY

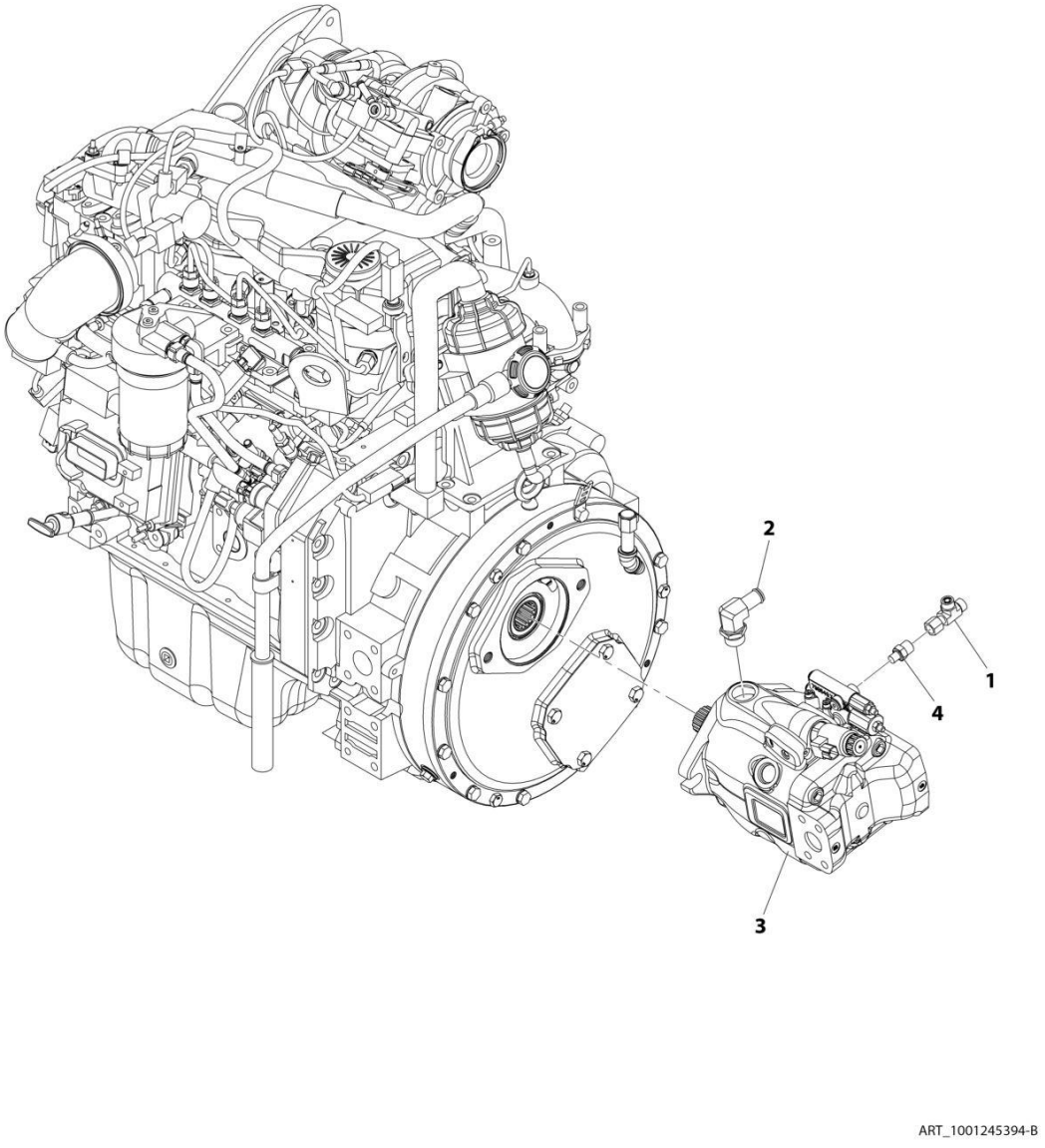

FIGURE 4-20. IMPLEMENT PUMP ASSEMBLY

ITEM	PART NUMBER	QTY	DESCRIPTION	REV
	1001245394	Ref	Implement Pump Assembly	B
1	2170706	1	Fitting, Tee ORFS	
2	1001188880	1	Fitting	
3	1001203793	1	Pump (See Separate Breakdown in HYDRAULIC COMPONENTS Section)	
4	2110604	1	Fitting, Straight ORFS	

FIGURE 4-21. DEF COOLANT LINES INSTALLATION

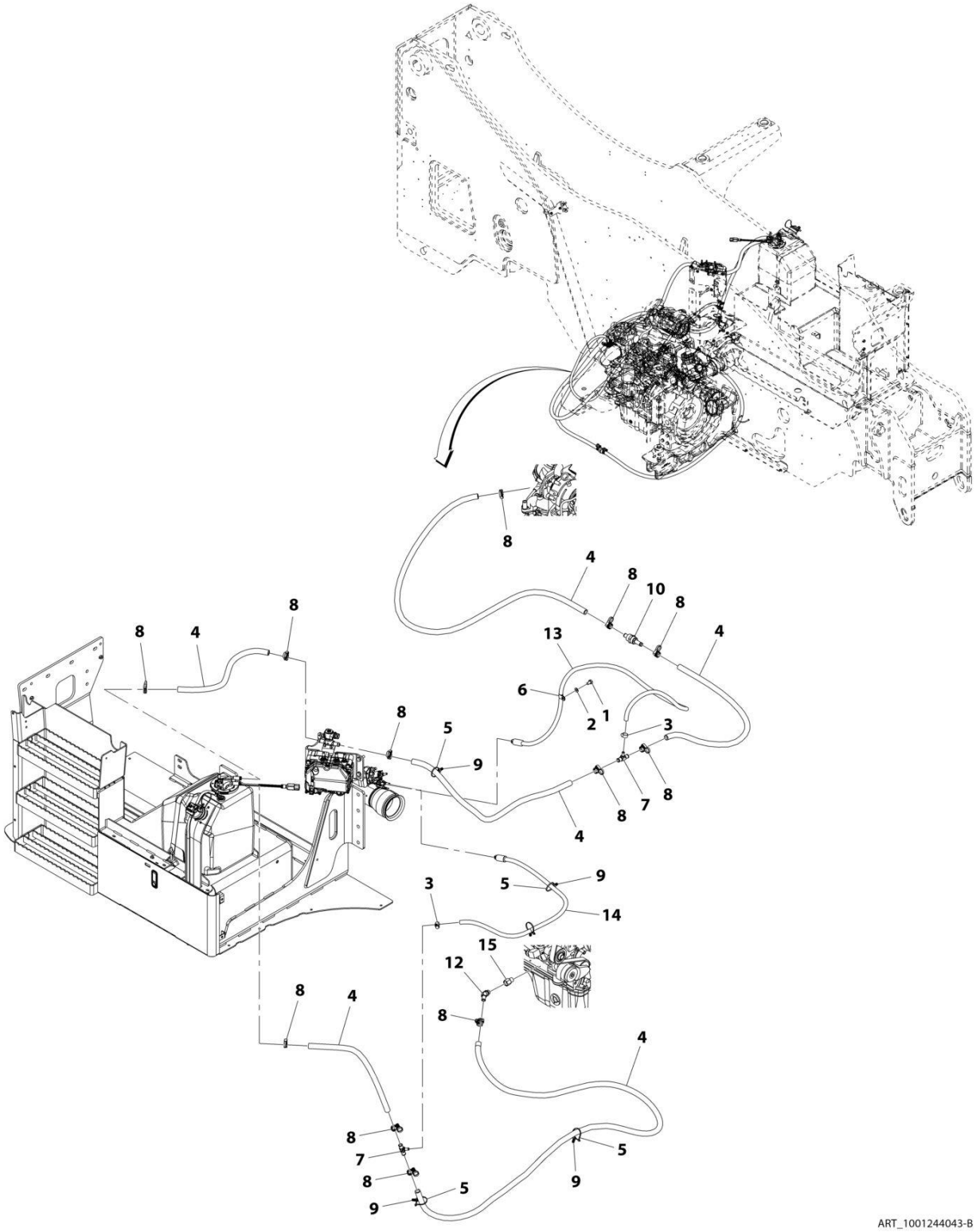

FIGURE 4-21. DEF COOLANT LINES INSTALLATION

ITEM	PART NUMBER	QTY	DESCRIPTION	REV
	1001244043	Ref	DEF Coolant Lines Installation	B
1	0761008	1	Bolt, M10X16	
2	4812000	1	Washer, M10	
3	8410013	2	Gear Clamp	
4	82033995	9 m	Hose	
5	1001008559	5	Strap	
6	8406101	1	Clip	
7	1001162212	2	Fitting, Tee	
8	1001202526	12	Clamp	
9	1001202986	5	Strap, Fir Tree Push Mount	
10	1001228872	1	Filter	
12	1001238153	1	Fitting, Straight	
13	1001243728	1	Hose	
14	1001243729	1	Hose	
15	1001245075	1	Adapter	

FIGURE 4-22. DEF TANK INSTALLATION

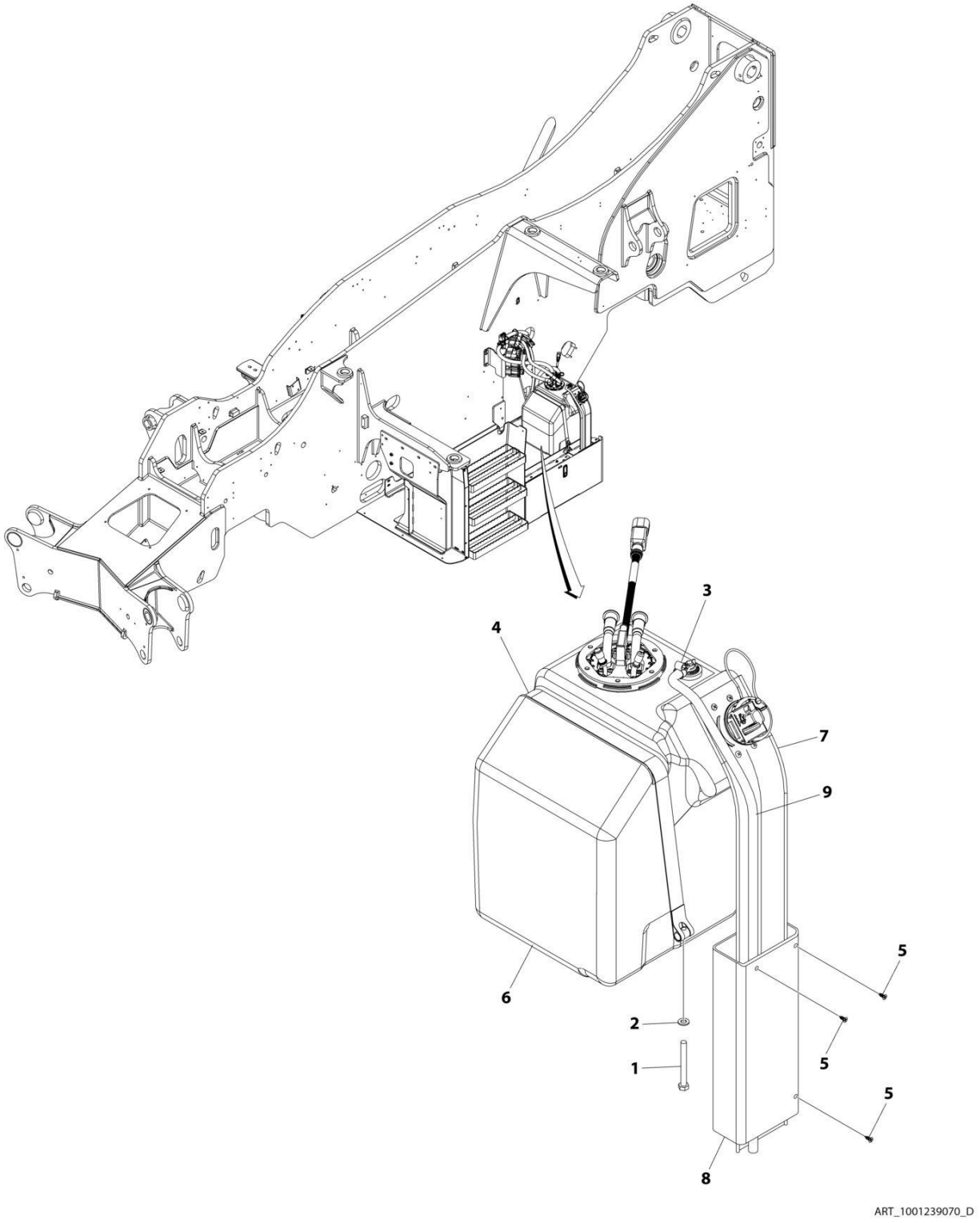

FIGURE 4-22. DEF TANK INSTALLATION

ITEM	PART NUMBER	QTY	DESCRIPTION	REV
	1001239070	Ref	DEF TANK INSTALLATION	D
1	0760823	1	Bolt M8 x 75	
2	4811900	1	Washer M8	
3	8405009	1	Clamp, Gear	
4	1001178791	1	Strap, Tank	
5	1001226681	3	Screw	
6	1001289561	1	Assembly, DEF Tank (See Separate Breakdown in this Section)	
7	1001239149	1	Sleeve	
8	1001239165	1	Tube	
9	1001175201	887 mm	Hose	

FIGURE 4-23. DEF TANK ASSEMBLY

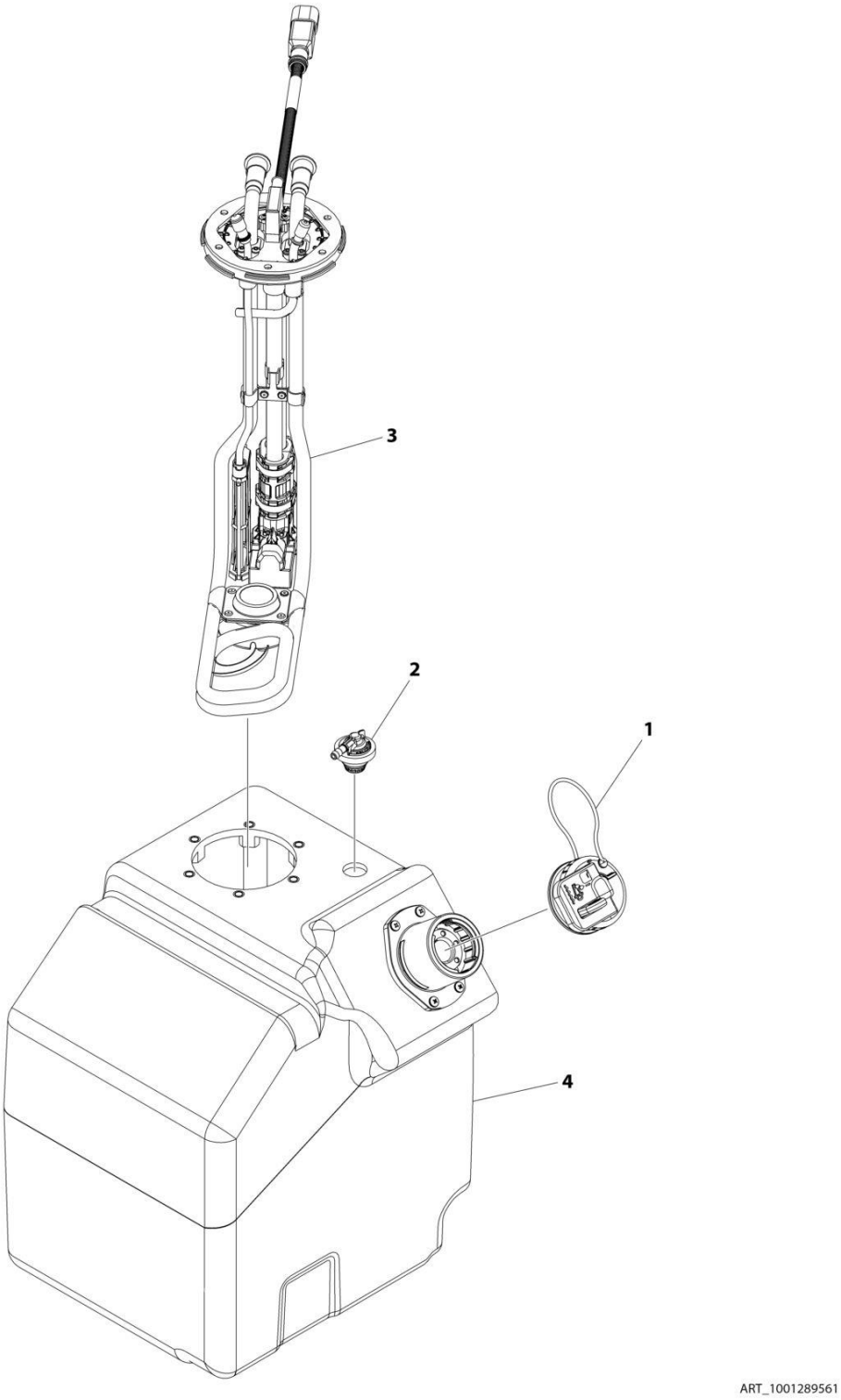

FIGURE 4-23. DEF TANK ASSEMBLY

ITEM	PART NUMBER	QTY	DESCRIPTION	REV
	1001289561	Ref	DEF TANK ASSEMBLY	A
1	1001174795	1	Cap	
2	1001215319	1	Valve (See Separate Breakdown in this Section)	
3	1001278919	1	Assembly, DEF Electrical	
4	1001289559	1	Tank	

FIGURE 4-24. DEF BREATHER VALVE

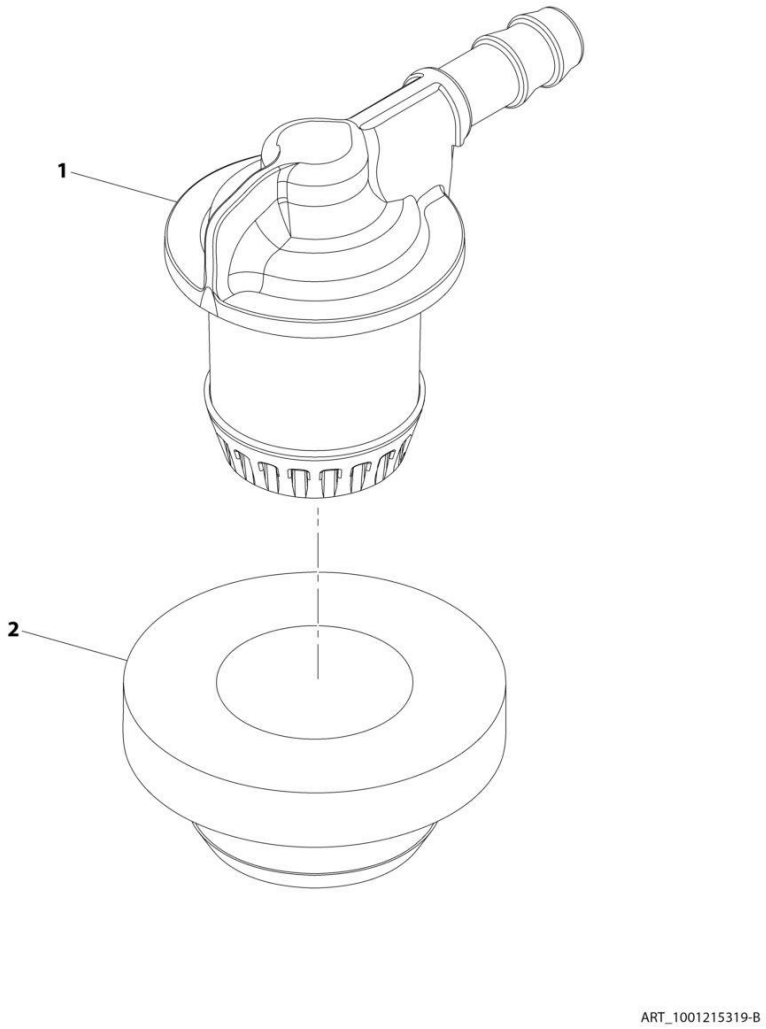

FIGURE 4-24. DEF BREATHER VALVE

ITEM	PART NUMBER	QTY	DESCRIPTION	REV
	1001215319	Ref	DEF Breather Valve	B
1	1001239510	1	Valve, DEF Breather	
2	1001239511	1	Grommet, DEF Breather	

FIGURE 4-25. COOLING PACKAGE INSTALLATION (CUMMINS 4.5L - 2733)

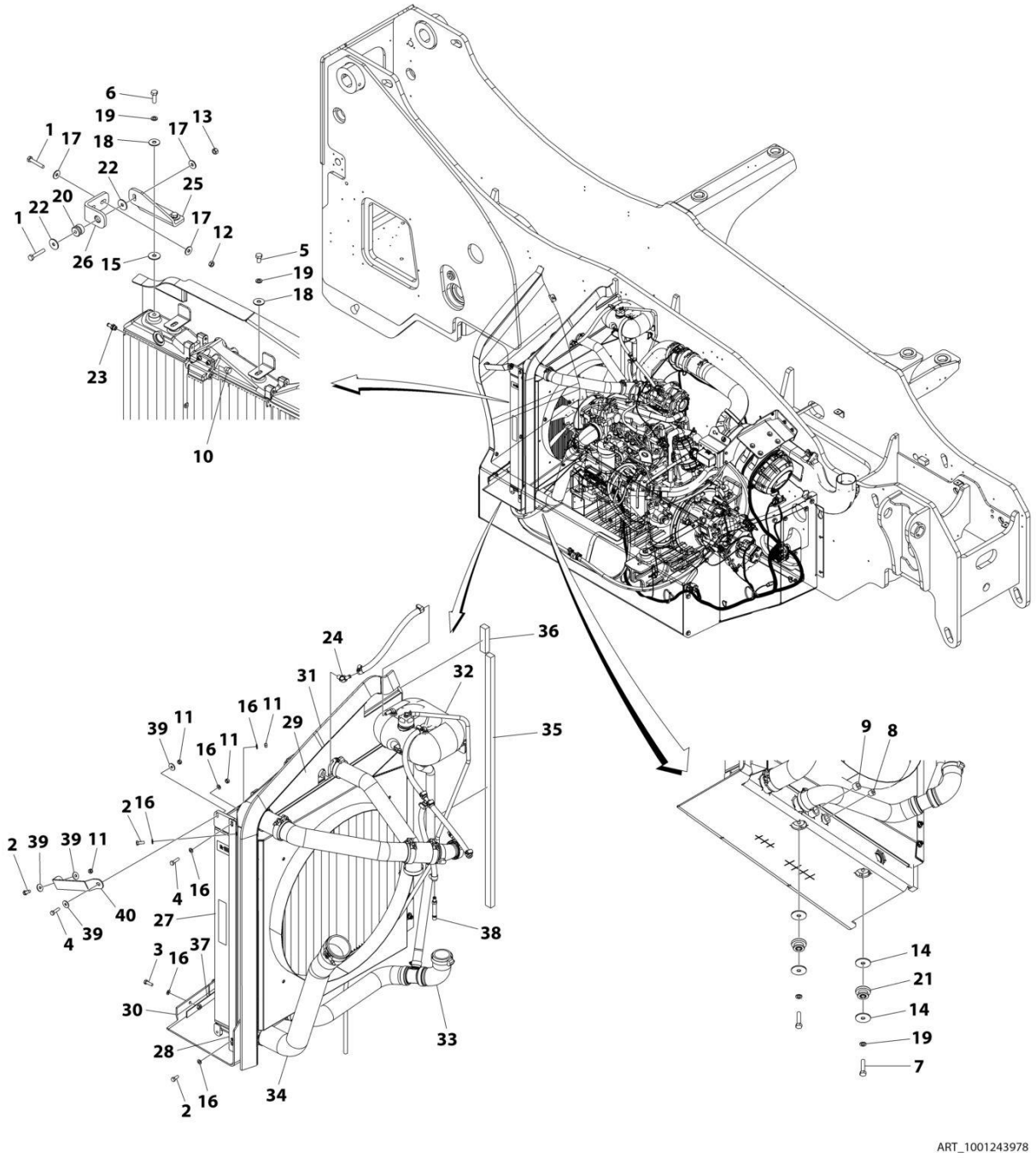

FIGURE 4-25. COOLING PACKAGE INSTALLATION (CUMMINS 4.5L - 2733)

ITEM	PART NUMBER	QTY	DESCRIPTION	REV
	1001243978	Ref	COOLING PACKAGE INSTALLATION (CUMMINS 4.5L)	C
1	0701020	3	Bolt M10 x 60	
2	0760810	3	Bolt M8 x 20	
3	0760812	4	Bolt M8 x 25	
4	0760814	2	Bolt M8 x 30	
5	0761210	1	Bolt M12 x 20	
6	0761215	2	Bolt M12 x 35	
7	0761218	2	Bolt M12 x 50	
8	2200223	1	Plug	
9	2200224	1	Plug	
10	2220237	2	Plug	
11	3290801	4	Nut M8 x 1.25	
12	3291001	2	Nut M10 x 1.5	
13	3291005	1	Nut M10 x 1.5	
14	4740274	4	Washer	
15	4740550	1	Washer M12	
16	4811900	9	Washer M8	
17	4812002	5	Washer M10	
18	4812102	3	Washer M12	
19	4832100	5	Washer M12	
20	8278020	1	Mount	
21	1001114803	2	Mount	
22	1001155540	2	Washer	
23	1001168030	2	Barb, Hose	
24	1001174356	1	Barb, Hose	
25	1001200498	1	Bracket, Radiator	
26	1001200499	1	Bracket, Frame	
27	1001237936	1	Radiator Cooling Package (See Separate Breakdown in this Section)	
28	1001250184	1	Plate	
29	1001250185	1	Bracket	
30	1001250183	1	Panel, Air Dam	
31	1001243961	1	Seal, Foam Gasket	
32	1001244051	1	Installation, Surge Tank (See Separate Breakdown in this Section)	
33	1001244052	1	Installation, Coolant Lines (See Separate Breakdown in this Section)	
34	1001244053	1	Installation, CAC Lines (See Separate Breakdown in this Section)	
35	1001244117	1	Seal, Foam Gasket	
36	1001244118	1	Seal, Foam Gasket	
37	1001247366	1	Bracket	
38	1001252525	1	Coupling	
39	4811902	4	Washer	
40	1001250190	1	Bracket	

FIGURE 4-26. COOLING PACKAGE INSTALLATION (CUMMINS 4.5L - 12010)

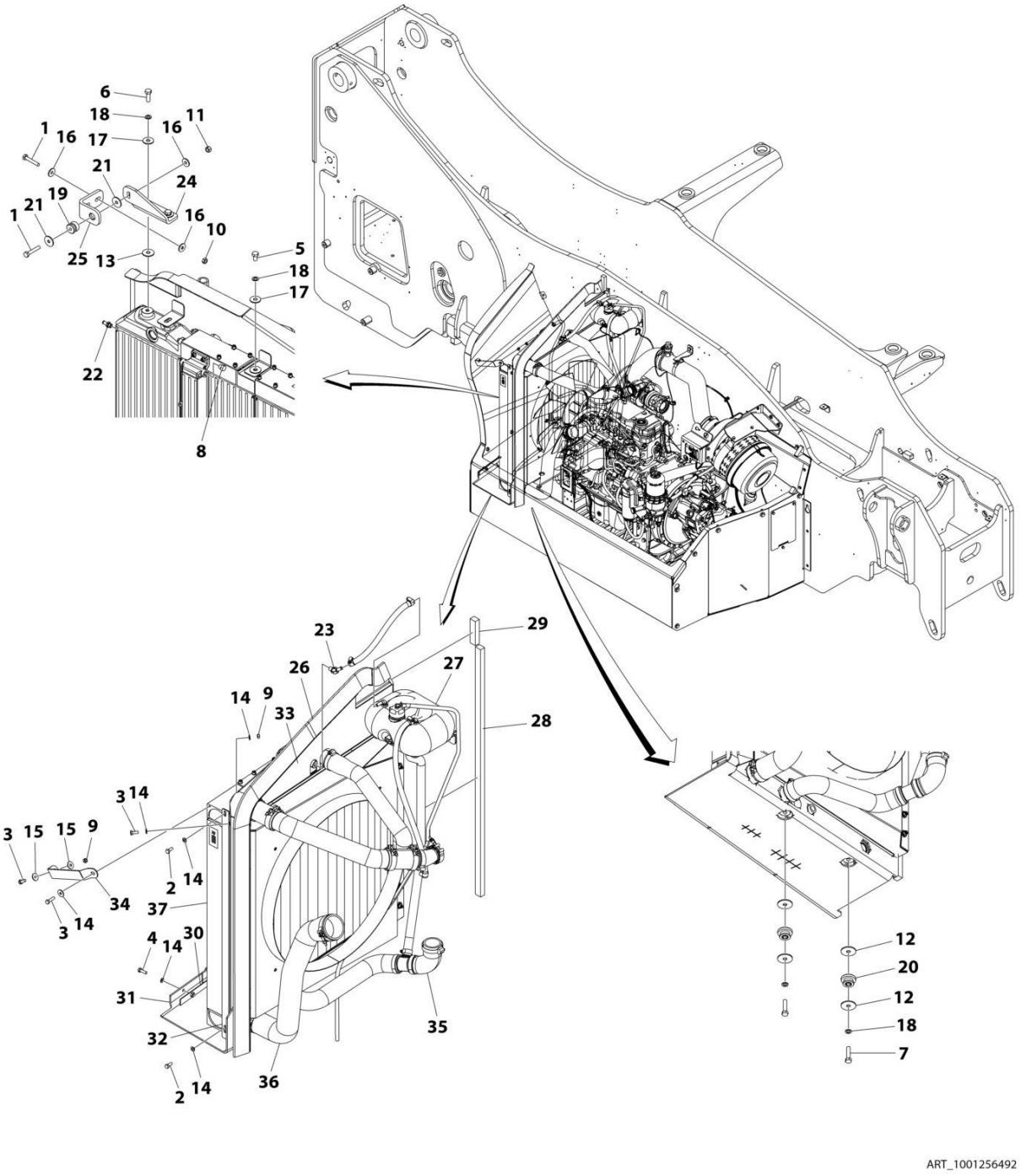

FIGURE 4-26. COOLING PACKAGE INSTALLATION (CUMMINS 4.5L - 12010)

ITEM	PART NUMBER	QTY	DESCRIPTION	REV
	1001256492	Ref	COOLING PACKAGE INSTALLATION (CUMMINS 4.5L)	A
1	0701020	3	Bolt M10 x 60	
2	0760807	2	Bolt M8 x 14	
3	0760810	3	Bolt M8 x 20	
4	0760812	4	Bolt M8 x 25	
5	0761210	1	Bolt M12 x 20	
6	0761215	2	Bolt M12 x 35	
7	0761218	2	Bolt M12 x 50	
8	2220237	2	Plug	
9	3290801	2	Nut M8 x 1.25	
10	3291001	2	Nut M10 x 1.5	
11	3291005	1	Nut M10 x 1.5	
12	4740274	4	Washer	
13	4740550	1	Washer M12	
14	4811900	9	Washer M8	
15	4811902	2	Washer	
16	4812002	5	Washer M10	
17	4812102	3	Washer M12	
18	4832100	5	Washer M12	
19	8278020	1	Mount	
20	1001114803	2	Mount	
21	1001155540	2	Washer	
22	1001168030	2	Fitting, Straight	
23	1001174356	1	Fitting, 45	
24	1001200498	1	Bracket, Radiator	
25	1001200499	1	Bracket, Frame	
26	1001243961	1	Seal, Foam Gasket	
27	1001244051	1	Installation, Surge Tank (See Separate Breakdown in this Section)	
28	1001244117	1	Seal, Foam Gasket	
29	1001244118	1	Seal, Foam Gasket	
30	1001247366	1	Bracket	
31	1001250183	1	Panel, Air Dam	
32	1001250184	1	Plate	
33	1001250185	1	Bracket	
34	1001250190	1	Bracket	
35	1001256500	1	Installation, Coolant Lines (See Separate Breakdown in this Section)	
36	1001256501	1	Installation, CAC Lines (See Separate Breakdown in this Section)	
37	1001262349	1	Radiator Cooling Package (See Separate Breakdown in this Section)	

FIGURE 4-27. COOLING PACKAGE INSTALLATION (ASOV - 2733)

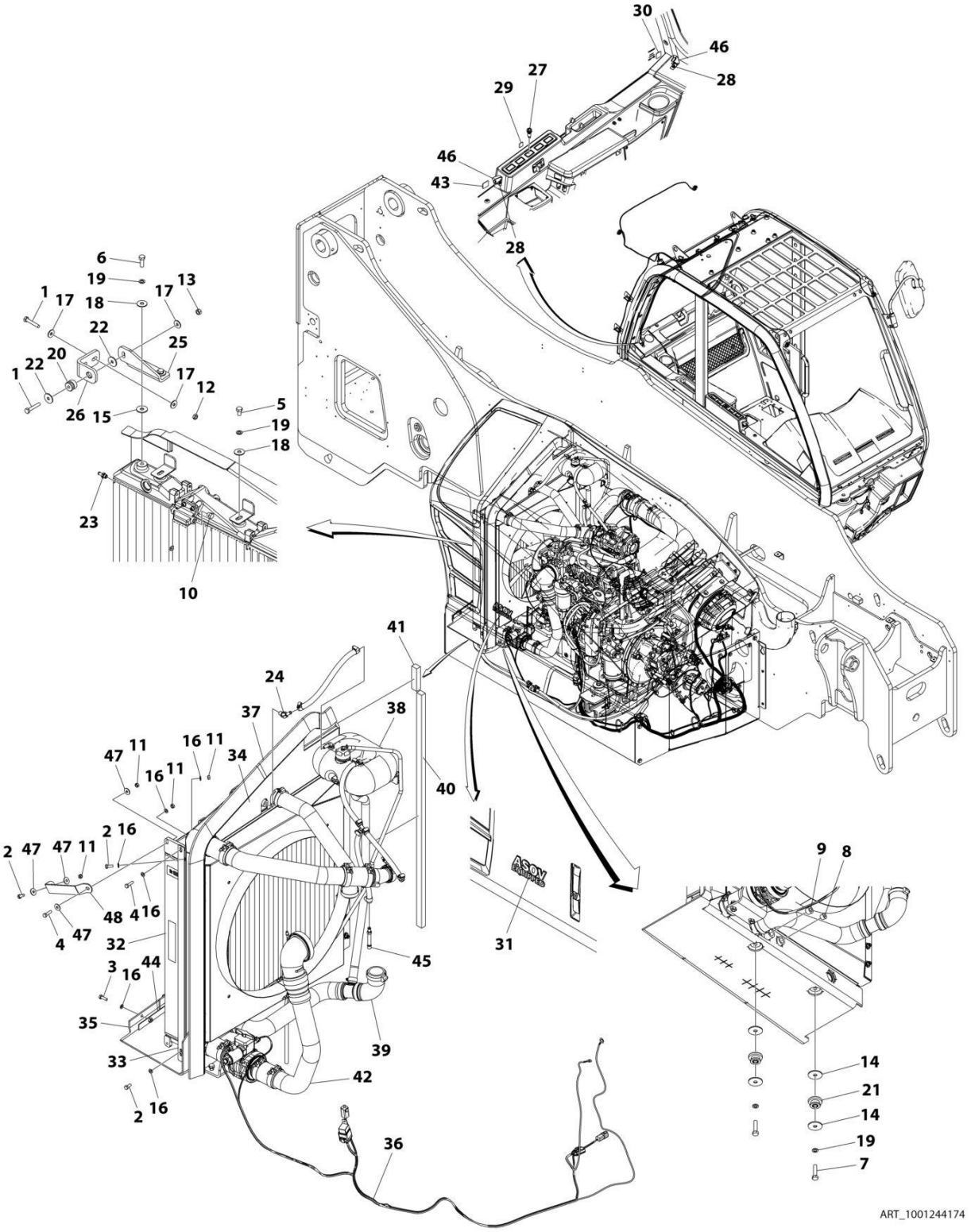

FIGURE 4-27. COOLING PACKAGE INSTALLATION (ASOV - 2733)

ITEM	PART NUMBER	QTY	DESCRIPTION	REV
	1001244174	Ref	COOLING PACKAGE INSTALLATION (ASOV)	C
1	0701020	3	Bolt M10 x 60	
2	0760810	3	Bolt M8 x 20	
3	0760812	4	Bolt M8 x 25	
4	0760814	2	Bolt M8 x 30	
5	0761210	1	Bolt M12 x 20	
6	0761215	2	Bolt M12 x 35	
7	0761218	2	Bolt M12 x 50	
8	2200223	1	Plug	
9	2200224	1	Plug	
10	2220237	2	Plug	
11	3290801	4	Nut M8 x 1.25	
12	3291001	2	Nut M10 x 1.5	
13	3291005	1	Nut M10 x 1.5	
14	4740274	4	Washer	
15	4740550	1	Washer M12	
16	4811900	9	Washer M8	
17	4812002	5	Washer M10	
18	4812102	3	Washer M12	
19	4832100	5	Washer M12	
20	8278020	1	Mount	
21	1001114803	2	Mount	
22	1001155540	2	Washer	
23	1001168030	2	Barb, Hose	
24	1001174356	1	Barb, Hose	
25	1001200498	1	Bracket, Radiator	
26	1001200499	1	Bracket, Frame	
27	1001200631	1	Lamp, LED Indicator	
28	1001255706	2	Switch	
29	1001227077	1	Decal, Air Shut Off	
30	1001227964	1	Decal, ASOV Test	
31	1001228643	1	Decal, ASOV Equipped	
32	1001237936	1	Radiator Cooling Package (See Separate Breakdown in this Section)	
33	1001250184	1	Plate	
34	1001250185	1	Bracket	
35	1001250183	1	Panel, Air Dam	
36	1001243540	1	ASOV Harness (See Separate Breakdown in ELECTRICAL Section)	
37	1001243961	1	Seal, Foam Gasket	
38	1001244051	1	Installation, Surge Tank (See Separate Breakdown in this Section)	
39	1001244052	1	Installation, Coolant Lines (See Separate Breakdown in this Section)	
40	1001244117	1	Seal, Foam Gasket	
41	1001244118	1	Seal, Foam Gasket	
42	1001244175	1	Installation, CAC Lines (See Separate Breakdown in this Section)	
43	1001246971	1	Decal, ASOV E-Stop	
44	1001247366	1	Bracket	
45	1001252525	1	Coupling	
46	1001255723	2	Switch, Toggle Guard	

ITEM	PART NUMBER	QTY	DESCRIPTION	REV
47	4811902	4	Washer	
48	1001250190	1	Bracket	

FIGURE 4-28. COOLING PACKAGE INSTALLATION (ASOV - 12010)

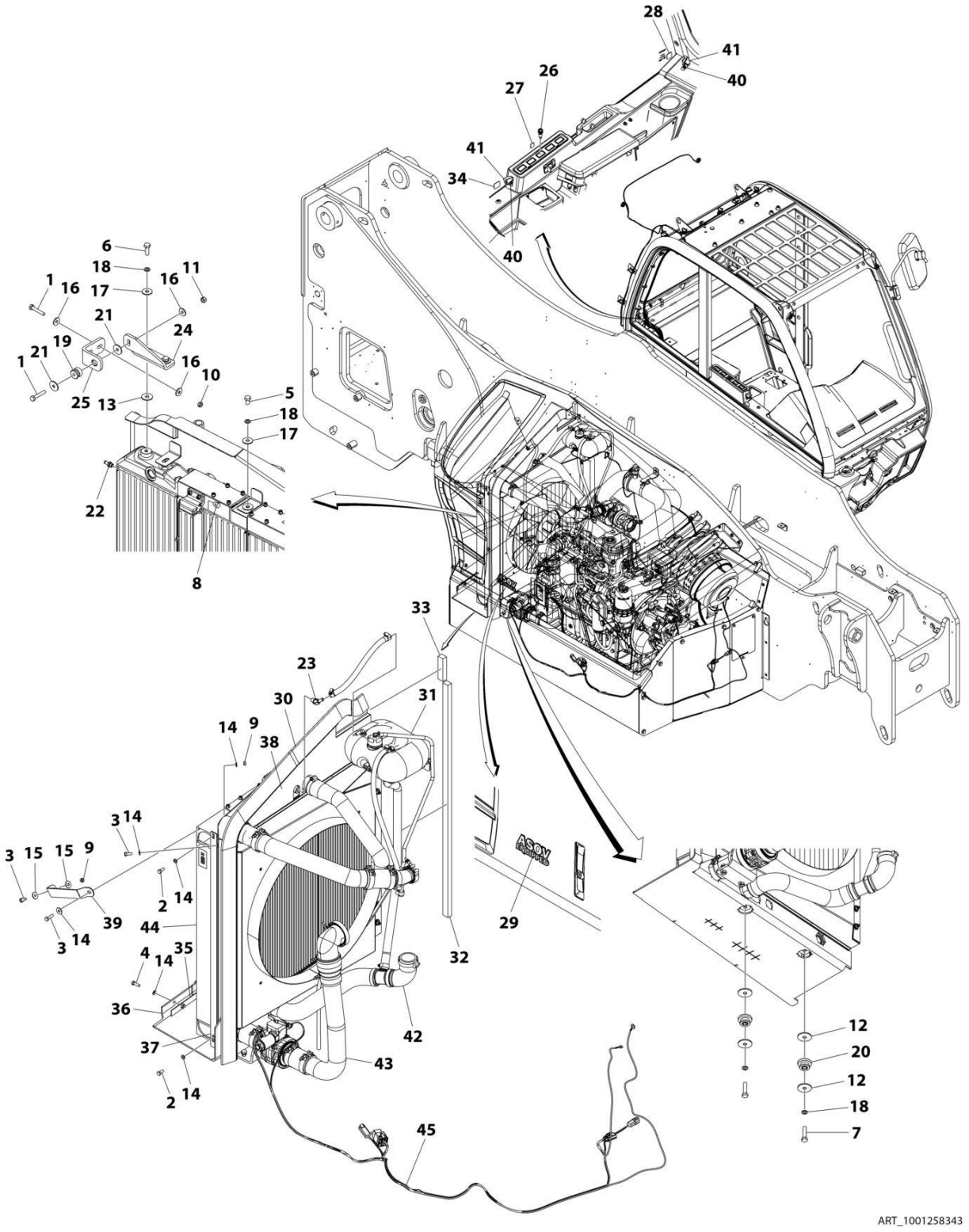

FIGURE 4-28. COOLING PACKAGE INSTALLATION (ASOV - 12010)

ITEM	PART NUMBER	QTY	DESCRIPTION	REV
	1001258343	Ref	COOLING PACKAGE INSTALLATION (ASOV)	A
1	0701020	3	Bolt M10 x 60	
2	0760807	2	Bolt M8 x 14	
3	0760810	3	Bolt M8 x 20	
4	0760812	4	Bolt M8 x 25	
5	0761210	1	Bolt M12 x 20	
6	0761215	2	Bolt M12 x 35	
7	0761218	2	Bolt M12 x 50	
8	2220237	2	Plug	
9	3290801	2	Nut M8	
10	3291001	2	Nut M10	
11	3291005	1	Nut M10	
12	4740274	4	Washer	
13	4740550	1	Washer M12	
14	4811900	9	Washer M8	
15	4811902	2	Washer M8	
16	4812002	5	Washer M10	
17	4812102	3	Washer M12	
18	4832100	5	Washer M12	
19	8278020	1	Mount	
20	1001114803	2	Mount	
21	1001155540	2	Washer	
22	1001168030	2	Fitting, Straight	
23	1001174356	1	Fitting, 45	
24	1001200498	1	Bracket, Radiator	
25	1001200499	1	Bracket, Frame	
26	1001200631	1	Lamp, LED Indicator	
27	1001227077	1	Decal, Air Shut Off	
28	1001227964	1	Decal, ASOV Test	
29	1001228643	1	Decal, ASOV Equipped	
30	1001243961	1	Seal, Foam Gasket	
31	1001244051	1	Installation, Surge Tank (See Separate Breakdown in this Section)	
32	1001244117	1	Seal, Foam Gasket	
33	1001244118	1	Seal, Foam Gasket	
34	1001246971	1	Decal, ASOV E-Stop	
35	1001247366	1	Bracket	
36	1001250183	1	Panel, Air Dam	
37	1001250184	1	Plate	
38	1001250185	1	Bracket	
39	1001250190	1	Bracket	
40	1001255706	2	Switch	
41	1001255723	2	Switch, Toggle Guard	
42	1001256500	1	Installation, Coolant Lines (See Separate Breakdown in this Section)	
43	1001258344	1	Installation, CAC Lines (See Separate Breakdown in this Section)	
44	1001262349	1	Radiator Cooling Package (See Separate Breakdown in this Section)	
45	1001243540	1	ASOV Harness (See Separate Breakdown in ELECTRICAL Section)	

FIGURE 4-29. RADIATOR ASSEMBLY (2733)

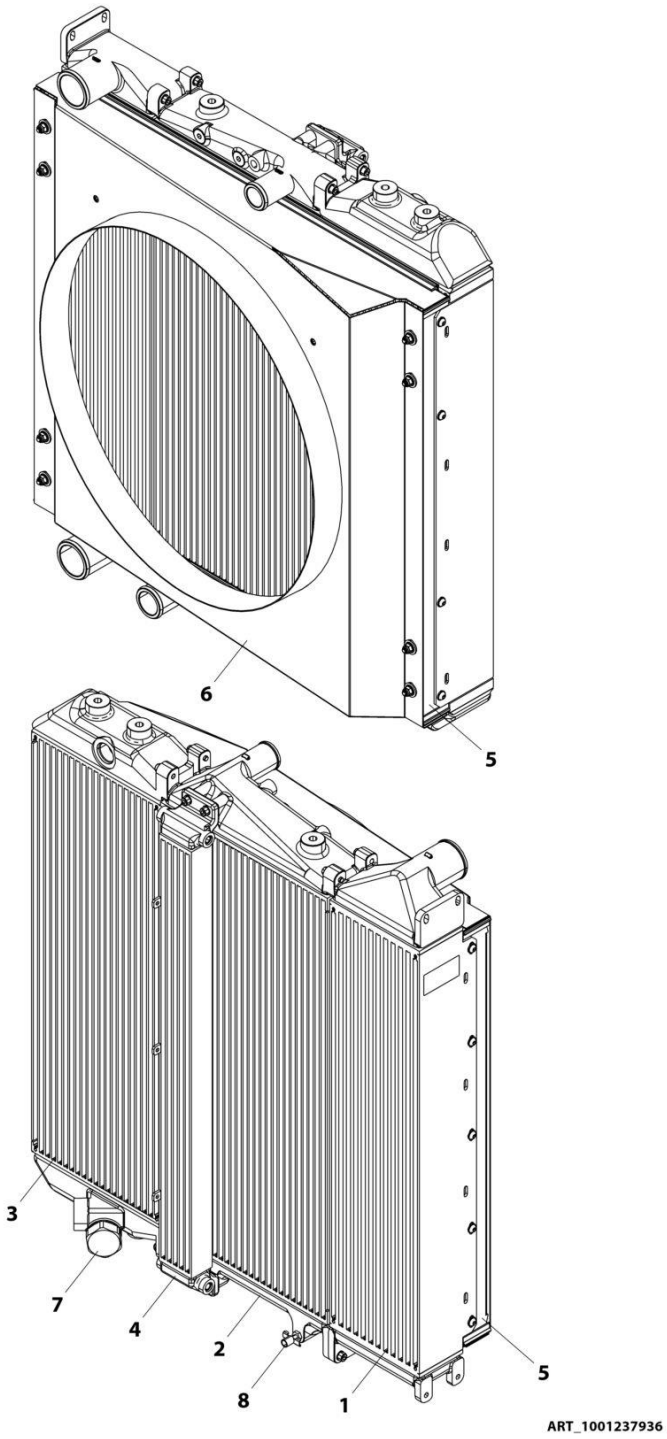

FIGURE 4-29. RADIATOR ASSEMBLY (2733)

ITEM	PART NUMBER	QTY	DESCRIPTION	REV
	1001237936	Ref	Radiator Assembly	D
1	70030086	1	Charge Air Cooler	
2	70026354	1	Radiator	
3	70028550	1	HYD Oil Cooler	
4	70026357	1	Fuel Cooler	
5	70026359	2	Bracket, Shroud Mounting	
6	70030087	1	Shroud	
7	70028548	1	Valve Bypass	
8	70026081	1	Petcock	

FIGURE 4-30. RADIATOR ASSEMBLY (12010)

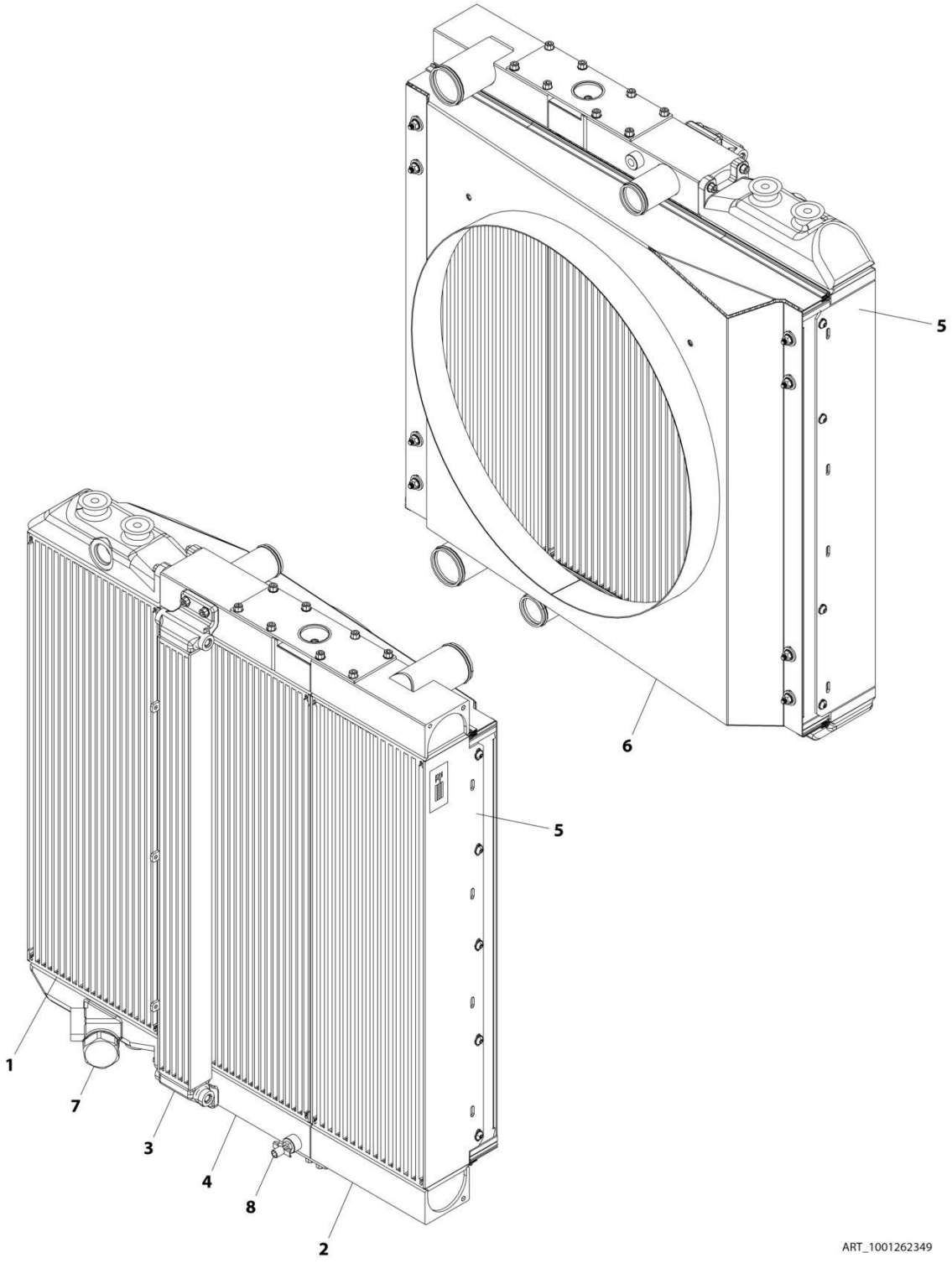

FIGURE 4-30. RADIATOR ASSEMBLY (12010)

ITEM	PART NUMBER	QTY	DESCRIPTION	REV
	1001262349	Ref	RADIATOR COOLING PACKAGE	A
1	70028550	1	Hydraulic Oil Cooler	
2	70030287	1	Charge Air Cooler	
3	70026357	1	Fuel Cooler	
4	70030288	1	Radiator	
5	70026359	2	Bracket, Shroud Mounting	
6	70030087	1	Shroud	
7	70028548	1	Valve, Bypass	
8	70026081	1	Petcock	

FIGURE 4-31. SURGE TANK INSTALLATION

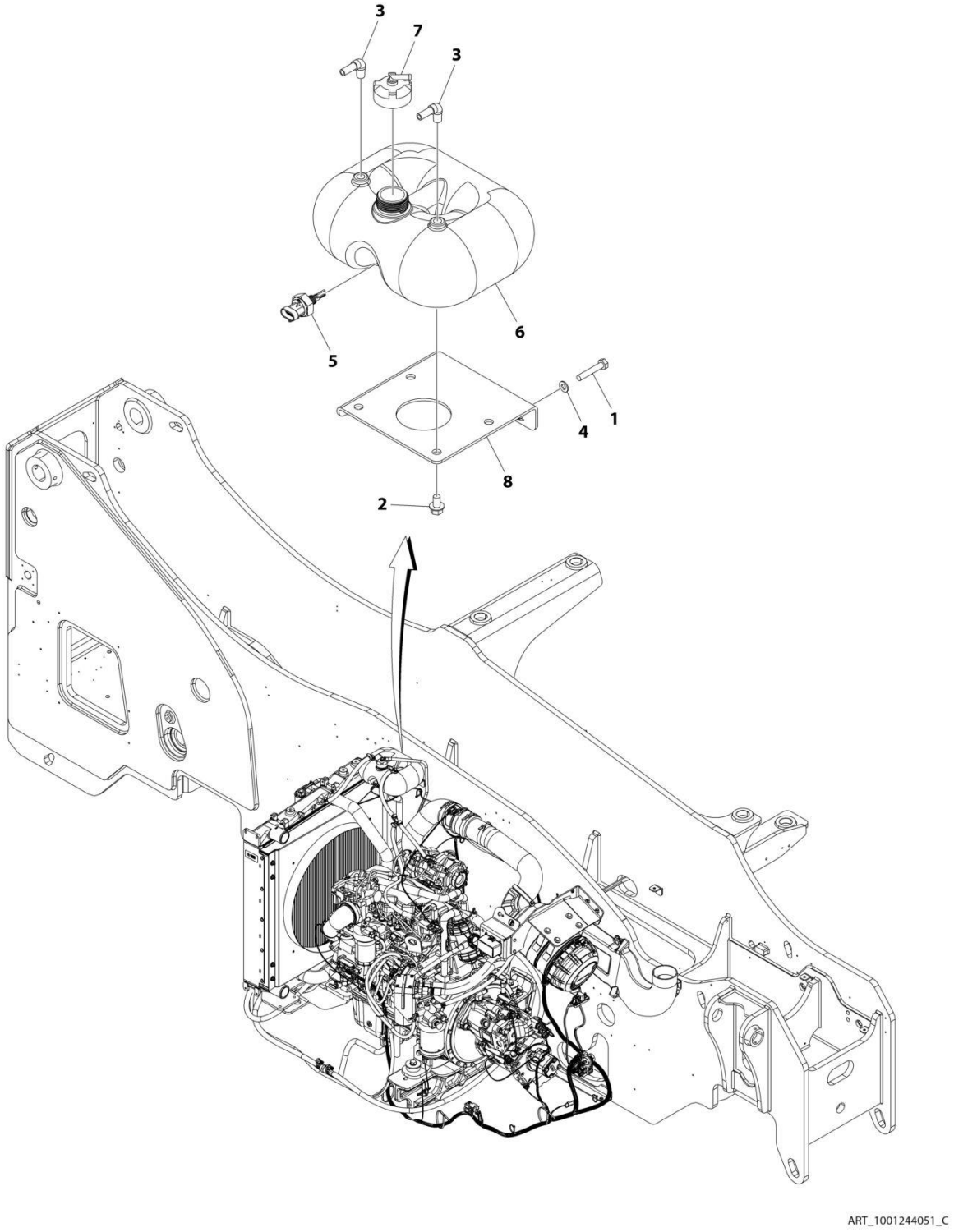

FIGURE 4-31. SURGE TANK INSTALLATION

ITEM	PART NUMBER	QTY	DESCRIPTION	REV
	1001244051	Ref	SURGE TANK INSTALLATION	C
1	0700817	2	Bolt M8 x 45	
2	0791605	4	Bolt M3/8-16 x 5/8	
3	2180467	2	Fitting	
4	4811900	2	Washer M8	
5	1001286175	1	Sensor, Coolant Level	
6	1001128144	1	Tank, Coolant	
7	1001128341	1	Cap	
8	1001163637	1	Bracket, Coolant Tank	

FIGURE 4-32. COOLANT LINES INSTALLATION (2733)

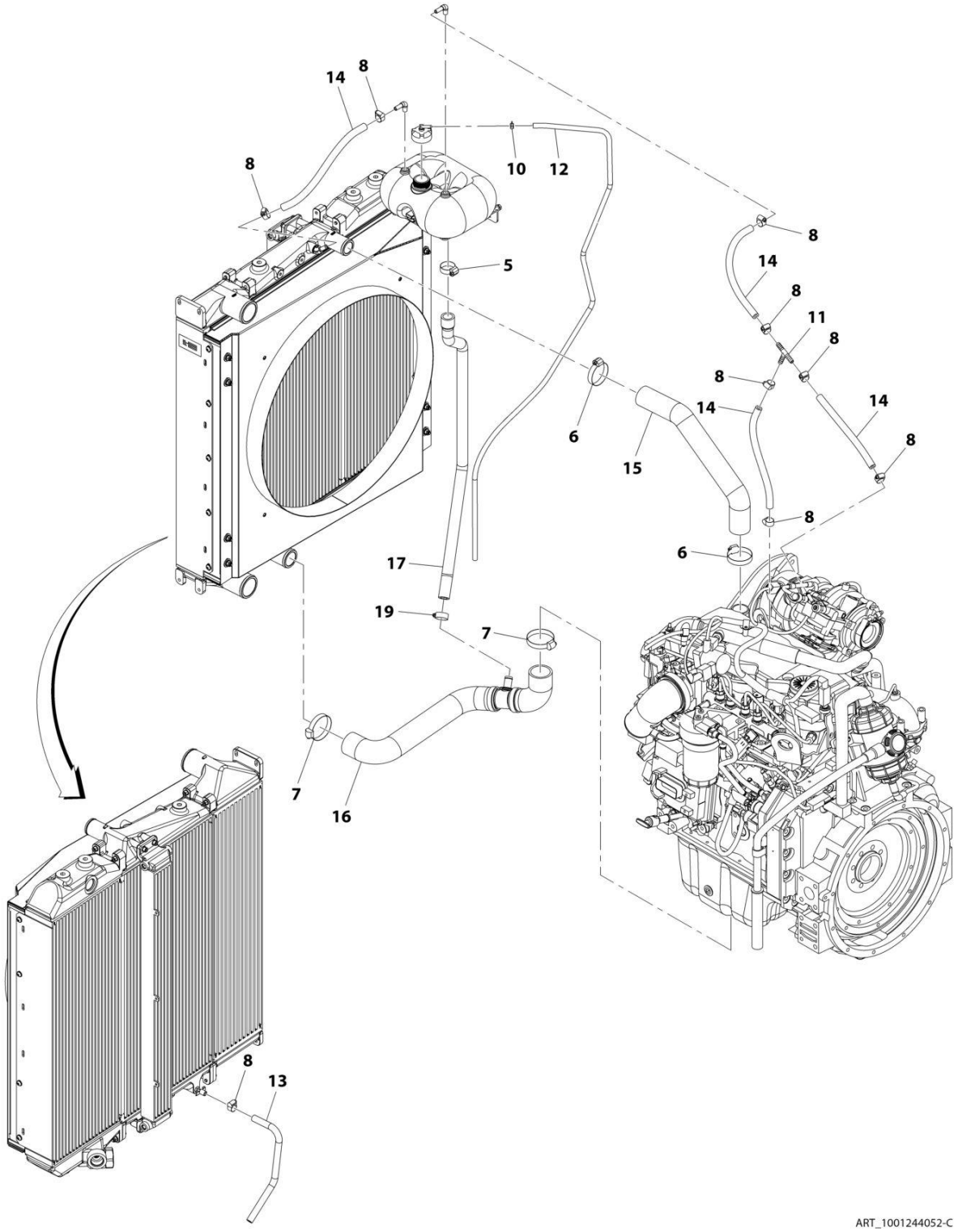

FIGURE 4-32. COOLANT LINES INSTALLATION (2733)

ITEM	PART NUMBER	QTY	DESCRIPTION	REV
	1001244052	Ref	Coolant Lines Installation	C
5	8405101	1	Clamp, Gear	
6	8405201	2	Clamp, Gear	
7	8405202	2	Clamp, Gear	
8	8410013	9	Clamp, Gear	
10	1001144802	1	Clamp, Hose	
11	1001172953	1	Pipe, Tee	
12	1001180542	1680 mm	Hose	
13	1001180553	370 mm	Hose	
14	1001181625	1180 mm	Hose	
15	1001239297	1	Hose	
16	1001239298	1	Hose	
17	1001242685	1	Hose	
19	8405007	1	Clamp, Gear	

FIGURE 4-33. COOLANT LINES INSTALLATION (12010)

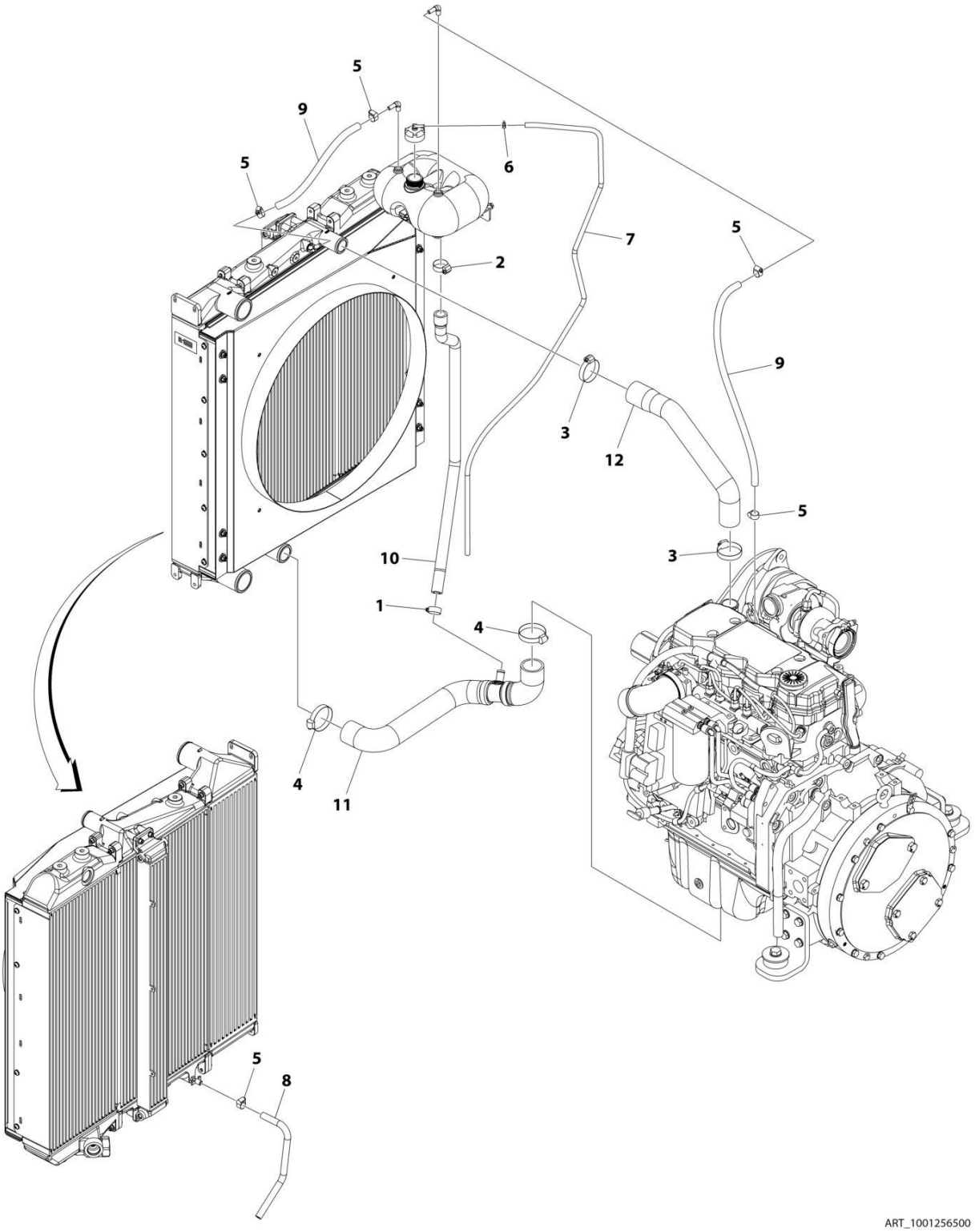

FIGURE 4-33. COOLANT LINES INSTALLATION (12010)

ITEM	PART NUMBER	QTY	DESCRIPTION	REV
	1001256500	Ref	COOLING LINES INSTALLATION	A
1	8405007	1	Clamp, Gear	
2	8405101	1	Clamp, Gear	
3	8405201	2	Clamp, Gear	
4	8405202	2	Clamp, Gear	
5	8410013	5	Clamp, Gear	
6	1001144802	1	Clamp, Hose	
7	1001180542	1.7 m / 5.58 ft	Hose	
8	1001180553	0.37 m / 1.21 ft	Hose	
9	1001181625	0.94 m / 3.08 ft	Hose	
10	1001242685	1	Hose	
11	1001262591	1	Hose	
12	1001263425	1	Hose	

FIGURE 4-34. CAC LINES INSTALLATION (CUMMINS 4.5L - 2733)

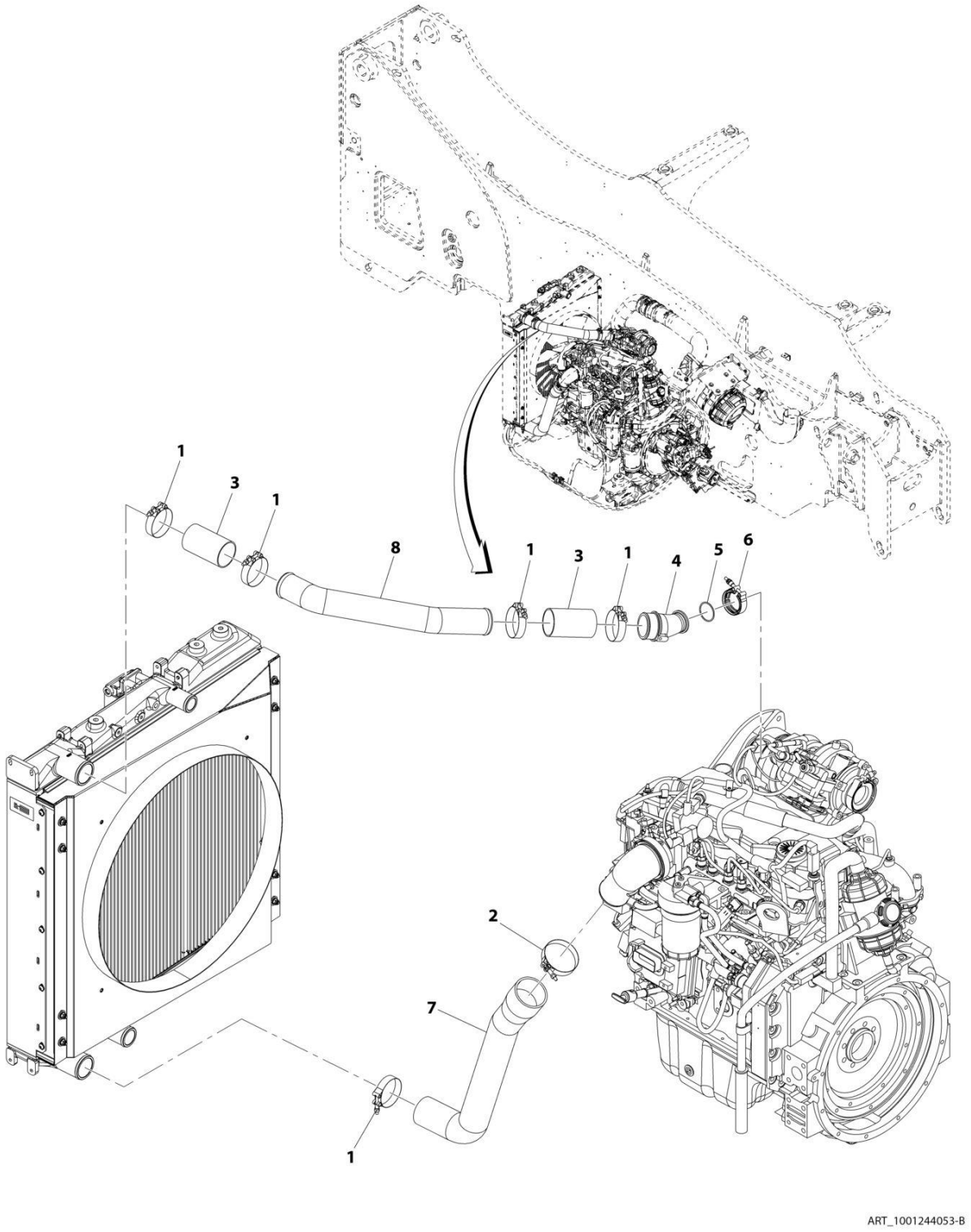

FIGURE 4-34. CAC LINES INSTALLATION (CUMMINS 4.5L - 2733)

ITEM	PART NUMBER	QTY	DESCRIPTION	REV
	1001244053	Ref	CAC Lines Installation	B
1	8405212	5	Clamp, T-Bolt	
2	8405305	1	Clamp, T-Bolt	
3	1001114495	2	Hose	
4	1001161920	1	Adapter Mech	
5	1001238624	1	O-Ring	
6	1001238625	1	Clamp, Pipe-Tube	
7	1001250181	1	Hose	
8	1001250180	1	Pipe	

FIGURE 4-35. CAC LINES INSTALLATION (CUMMINS 4.5L - 12010)

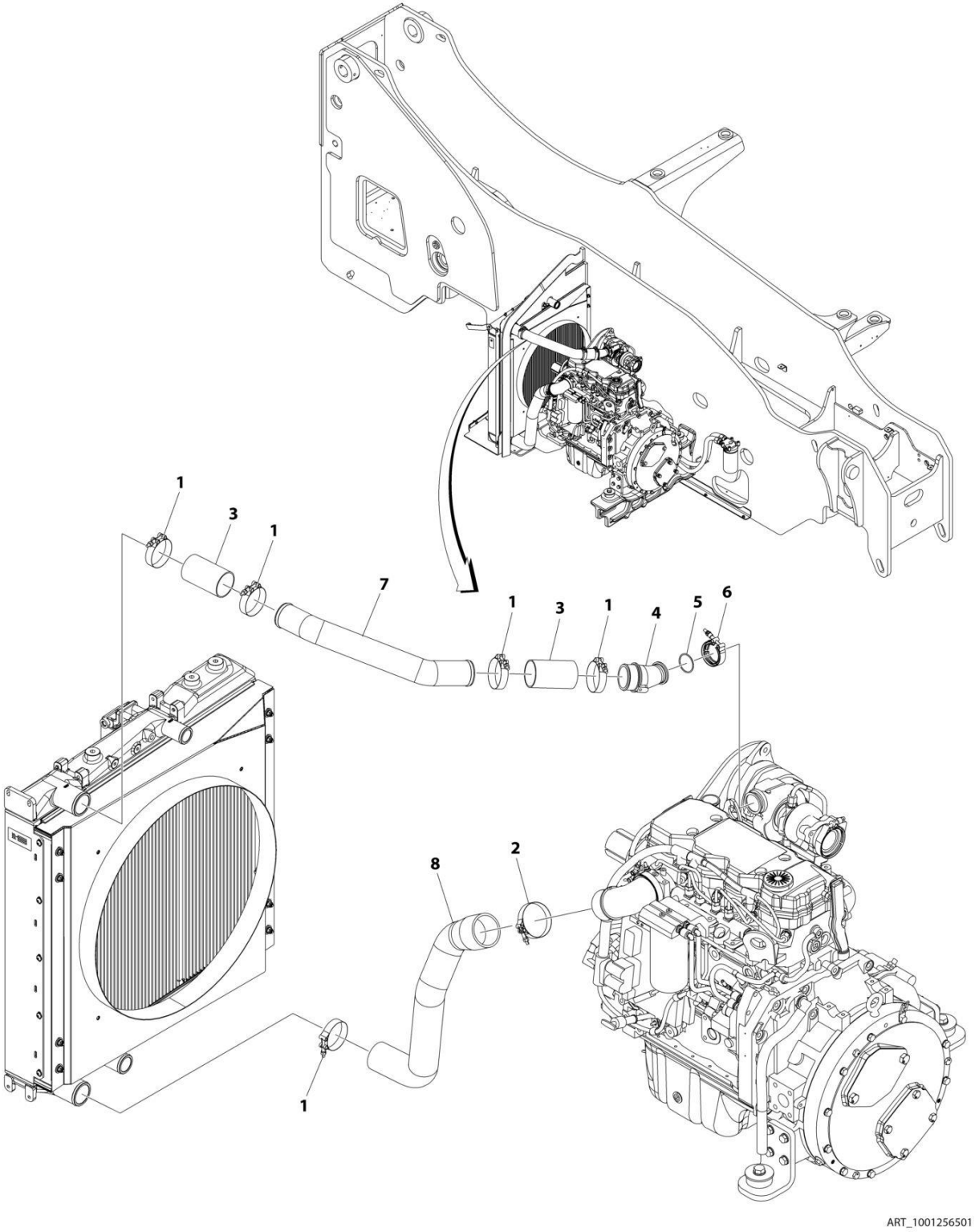

FIGURE 4-35. CAC LINES INSTALLATION (CUMMINS 4.5L - 12010)

ITEM	PART NUMBER	QTY	DESCRIPTION	REV
	1001256501	Ref	CAC LINES INSTALLATION (WITHOUT ASOV)	A
1	8405212	5	Clamp, T-Bolt	
2	8405305	1	Clamp, T-Bolt	
3	1001114495	2	Hose	
4	1001161920	1	Adapter Mech	
5	1001238624	1	O-Ring	
6	1001238625	1	Clamp, Pipe-Tube	
7	1001256504	1	Tube	
8	1001256505	1	Hose	

FIGURE 4-36. CAC LINES INSTALLATION (ASOV - 2733)

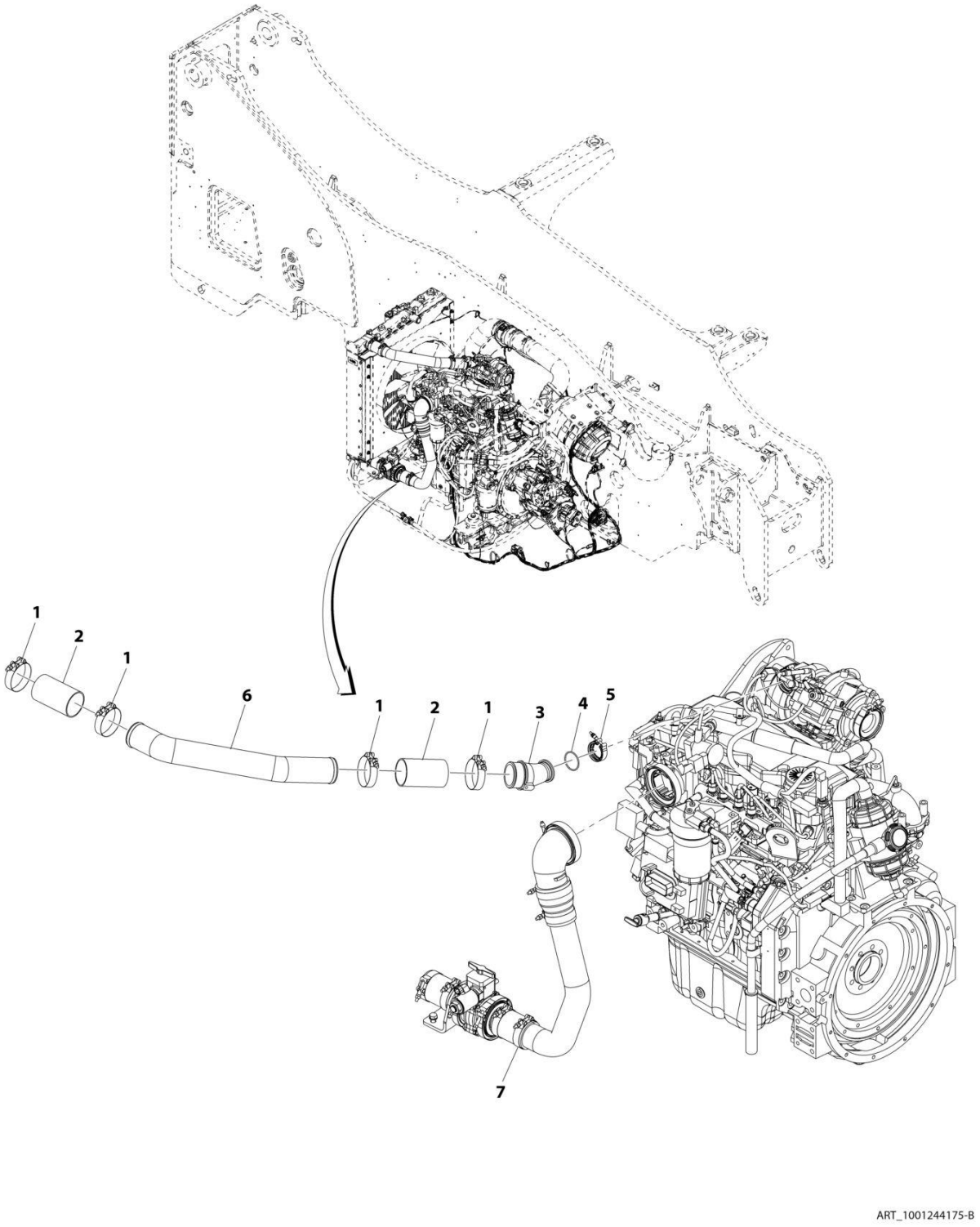

FIGURE 4-36. CAC LINES INSTALLATION (ASOV - 2733)

ITEM	PART NUMBER	QTY	DESCRIPTION	REV
	1001244175	Ref	CAC Lines Installation (ASOV)	B
1	8405212	4	Clamp, T-Bolt	
2	1001114495	2	Hose	
3	1001161920	1	Adapter Mech	
4	1001238624	1	O-Ring	
5	1001238625	1	Clamp, Pipe-Tube	
6	1001250180	1	Pipe	
7	1001244048	1	Installation, ASOV Lines (See Separate Breakdown in this Section)	

FIGURE 4-37. CAC LINES INSTALLATION (ASOV - 12010)

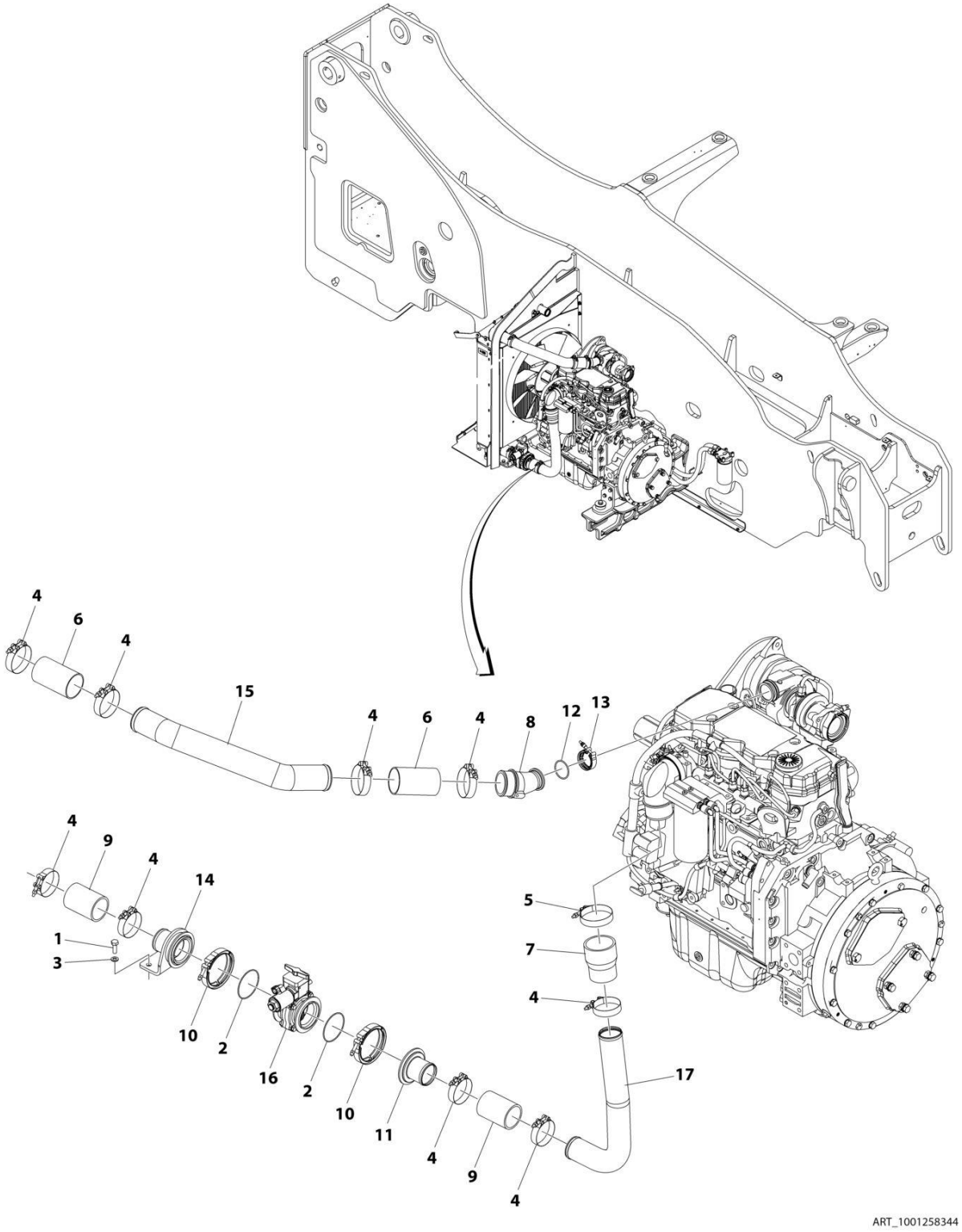

FIGURE 4-37. CAC LINES INSTALLATION (ASOV - 12010)

ITEM	PART NUMBER	QTY	DESCRIPTION	REV
	1001258344	Ref	CAC LINE INSTALLATION (WITH ASOV)	A
1	0701014	2	Bolt M10 x 30	
2	3790152	2	O-Ring	
3	4812000	2	Washer M10	
4	8405212	9	Clamp, T-Bolt	
5	8405305	1	Clamp, T-Bolt	
6	1001114495	2	Hose	
7	1001138348	1	Hose	
8	1001161920	1	Adapter Mech	
9	1001166416	2	Hose	
10	1001202247	2	V-Clamp	
11	1001223628	1	Adapter Mech	
12	1001238624	1	O-Ring	
13	1001238625	1	Clamp, Pipe-Tube	
14	1001253340	1	Bracket	
15	1001256504	1	Tube	
16	1001257324	1	Valve, Air Shut-Off	
17	1001258345	1	Pipe	

FIGURE 4-38. ASOV LINES INSTALLATION

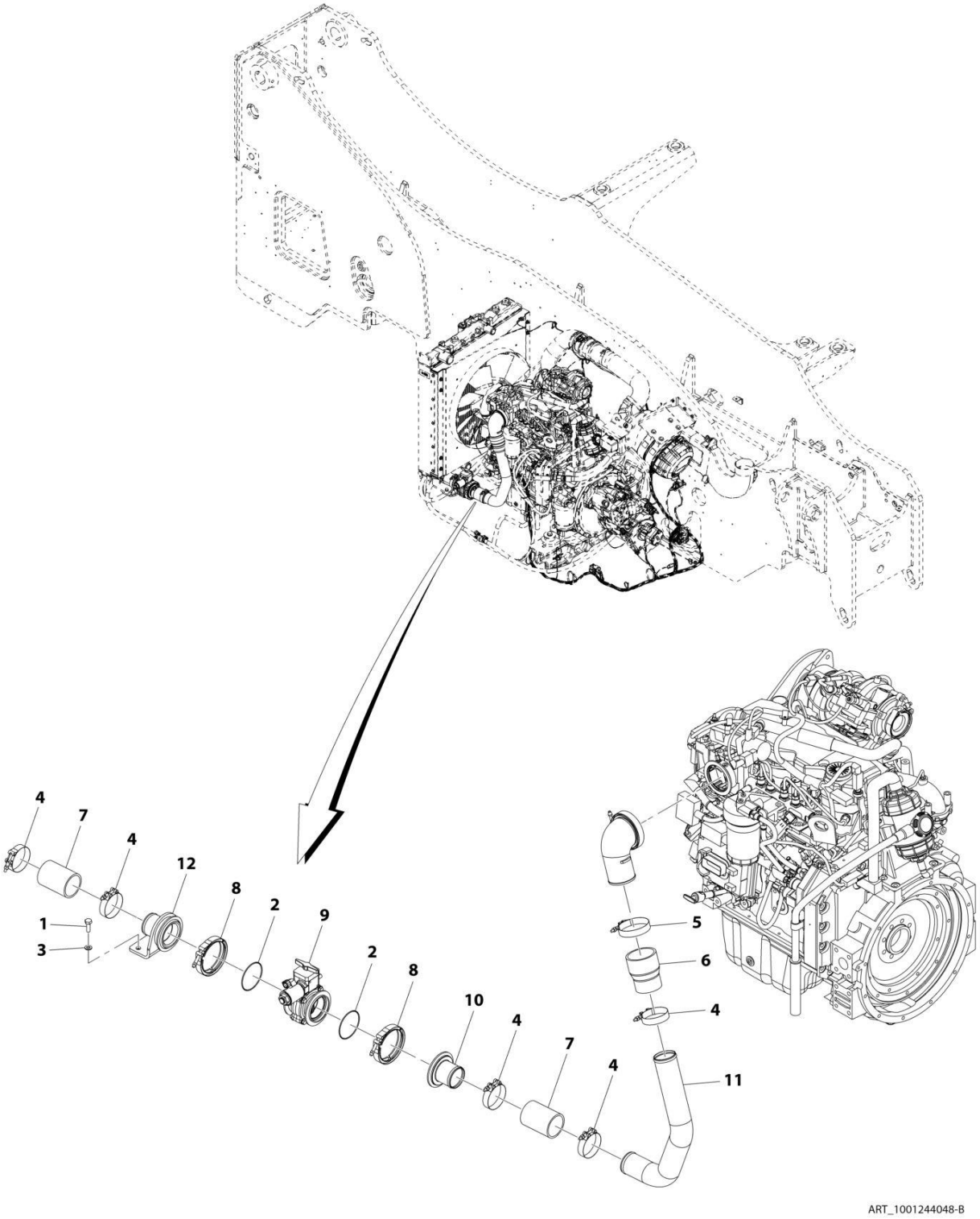

FIGURE 4-38. ASOV LINES INSTALLATION

ITEM	PART NUMBER	QTY	DESCRIPTION	REV
	1001244048	Ref	ASOV Lines Installation	B
1	0701014	2	Bolt, M10X30	
2	3790152	2	Ring	
3	4812000	2	Washer, M10	
4	8405212	5	Clamp, T-Bolt	
5	8405305	1	Clamp, T-Bolt	
6	1001138348	1	Hose	
7	1001166416	2 mm	Hose	
8	1001202247	2	Clamp	
9	1001257324	1	Valve, Air Shut Off	
10	1001223628	1	Adapter Mech	
11	1001250189	1	Pipe	
12	1001253340	1	Bracket	

FIGURE 4-39. FAN GUARD INSTALLATION

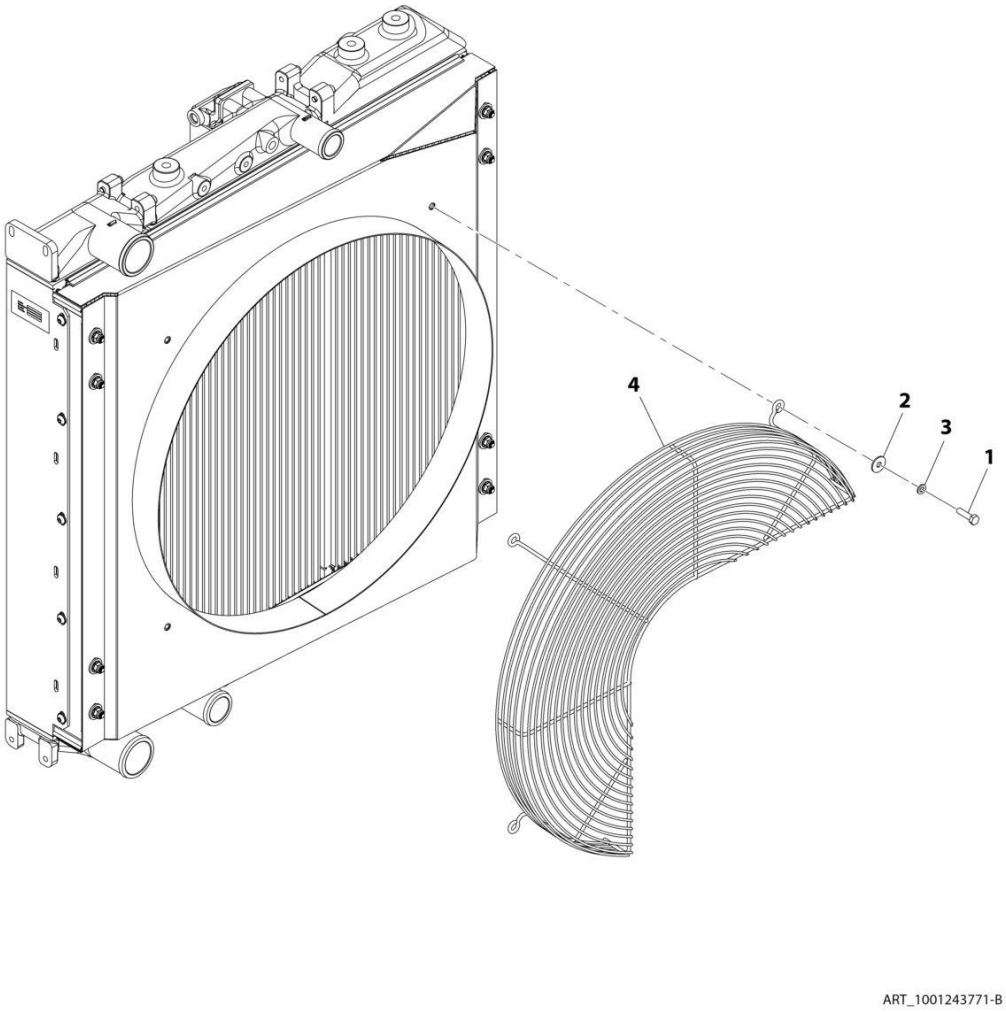

FIGURE 4-39. FAN GUARD INSTALLATION

ITEM	PART NUMBER	QTY	DESCRIPTION	REV
	1001243771	Ref	Fan Guard Installation	B
1	0700814	3	Bolt, M8X30	
2	4811902	3	Washer, M8	
3	4831900	3	Washer, Lock M8	
4	1001243772	1	Grill	

FIGURE 4-40. COOLING FAN INSTALLATION

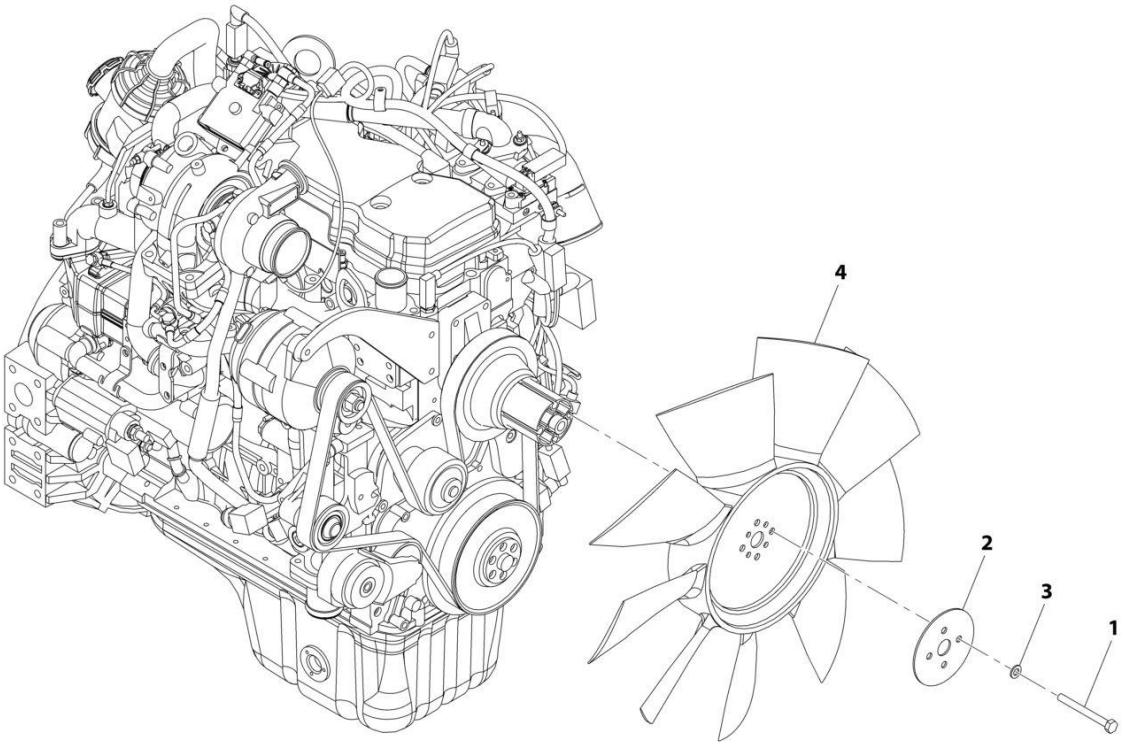

FIGURE 4-40. COOLING FAN INSTALLATION

ITEM	PART NUMBER	QTY	DESCRIPTION	REV
	1001244057	Ref	Cooling Fan Installation	A
1	0701027	4	Bolt, M10X100	
2	3575947	1	Plate	
3	4812000	4	Washer, M10	
4	1001237170	1	Fan, Cooling	

FIGURE 4-41. REVERSING FAN INSTALLATION

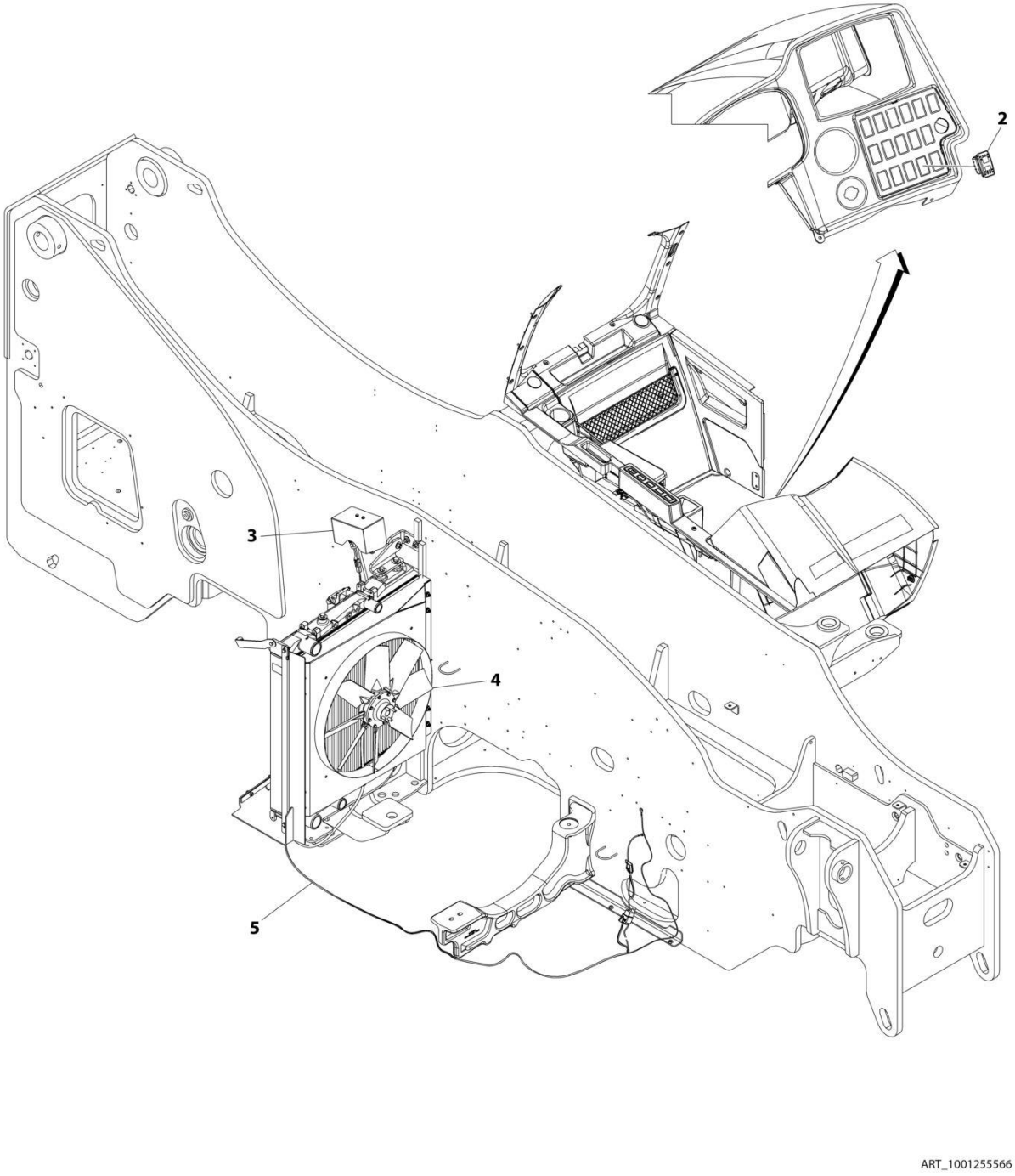

FIGURE 4-41. REVERSING FAN INSTALLATION

ITEM	PART NUMBER	QTY	DESCRIPTION	REV
	1001255566	Ref	REVERSE COOLING FAN INSTALLATION	B
1	1062255	AR	Tie-Strap (Not Shown)	
2	1001145204	1	Switch	
3	1001217757	1	Installation, Cover (See Separate Breakdown in this Section)	
4	1001241713	1	Kit, Reversing Fan	
5	1001257881	1	Harness, Reversing Fan (See Separate Breakdown in ELECTRICAL Section)	

FIGURE 4-42. COMPRESSOR COVER INSTALLATION

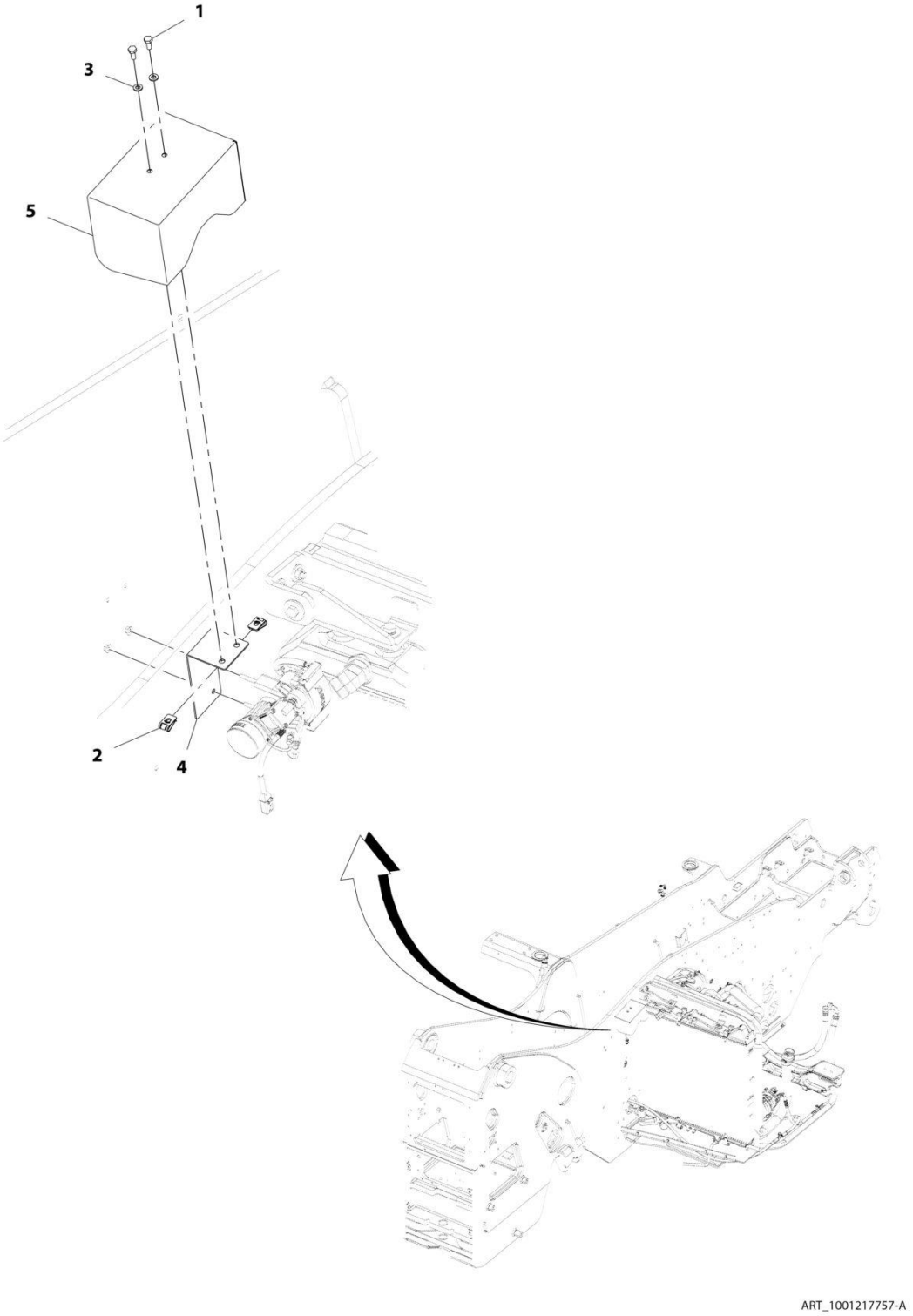

FIGURE 4-42. COMPRESSOR COVER INSTALLATION

ITEM	PART NUMBER	QTY	DESCRIPTION	REV
	1001217757	Ref	Compressor Cover Installation	A
1	0760607	2	Bolt, M6X14	
2	8305919	2	Nut, M6	
3	8307219	2	Washer, M6	
4	1001217758	1	Bracket	
5	1001217759	1	Cover	

FIGURE 4-43. EXHAUST INSTALLATION (CUMMINS 4.5L - 2733)

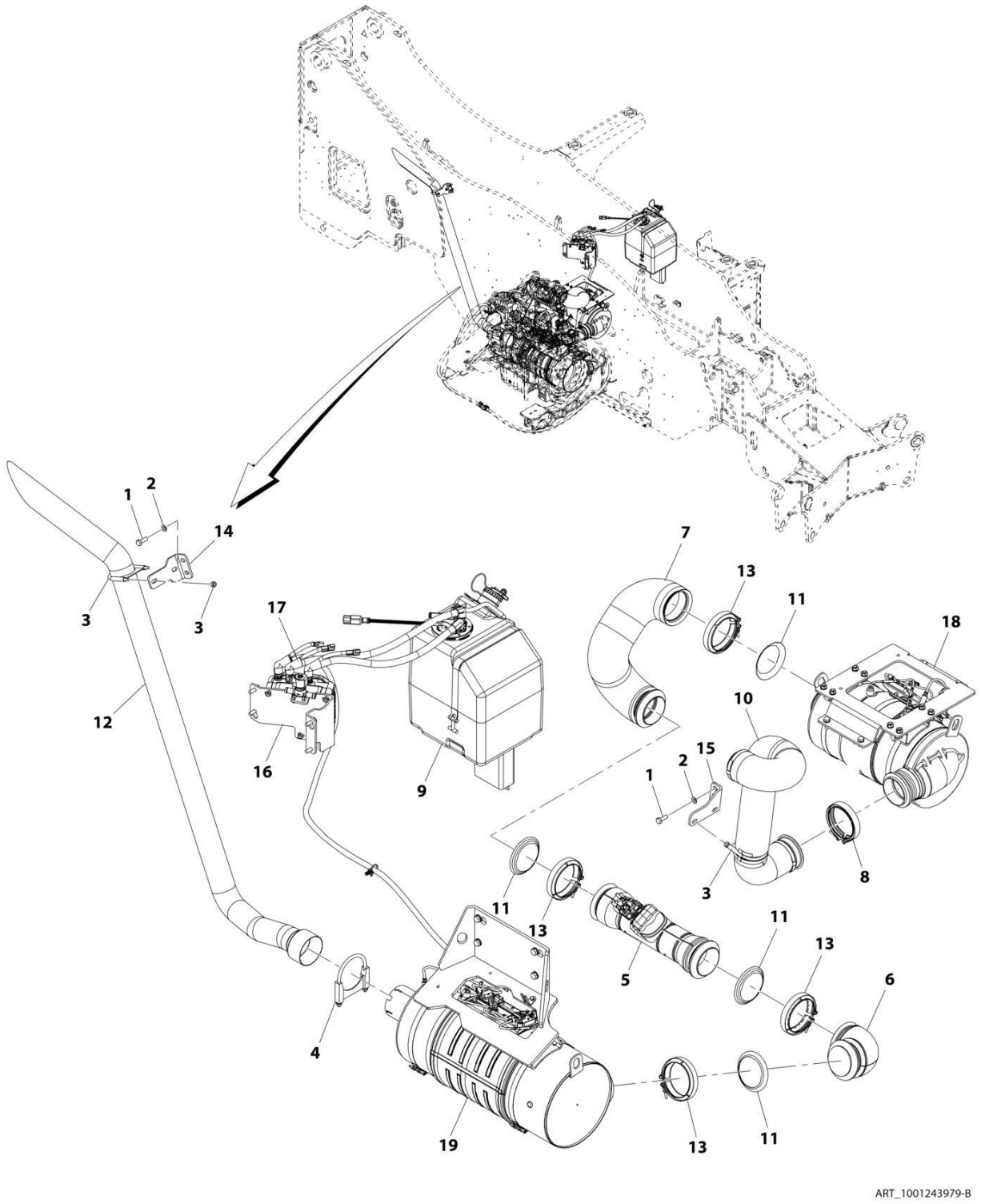

FIGURE 4-43. EXHAUST INSTALLATION (CUMMINS 4.5L - 2733)

ITEM	PART NUMBER	QTY	DESCRIPTION	REV
	1001243979	Ref	Exhaust Installation (Cummins 4.5L)	B
1	0701014	4	Bolt, M10X30	
2	4812000	4	Washer, M10	
3	24921332	2	Clamp	
4	86883127	1	Clamp	
5	1001236528	1	Muffler	
6	1001236556	1	Pipe	
7	1001236557	1	Pipe	
8	1001237181	1	Clamp	
9	1001239070	1	Installation, DEF Tank (See Separate Breakdown in this Section)	
10	1001239301	1	Pipe	
11	1001241318	4	Seal	
12	1001241326	1	Pipe	
13	1001241482	4	Clamp	
14	1001242740	1	Bracket	
15	1001242741	1	Bracket	
16	1001244059	1	Installation, DEF Pump and Control (See Separate Breakdown in this Section)	
17	1001244060	1	Installation, DEF Lines (See Separate Breakdown in this Section)	
18	1001245757	1	Installation, DOC (See Separate Breakdown in this Section)	
19	1001245758	1	Installation, SCR (See Separate Breakdown in this Section)	

FIGURE 4-44. EXHAUST INSTALLATION (CUMMINS 4.5L - 12010)

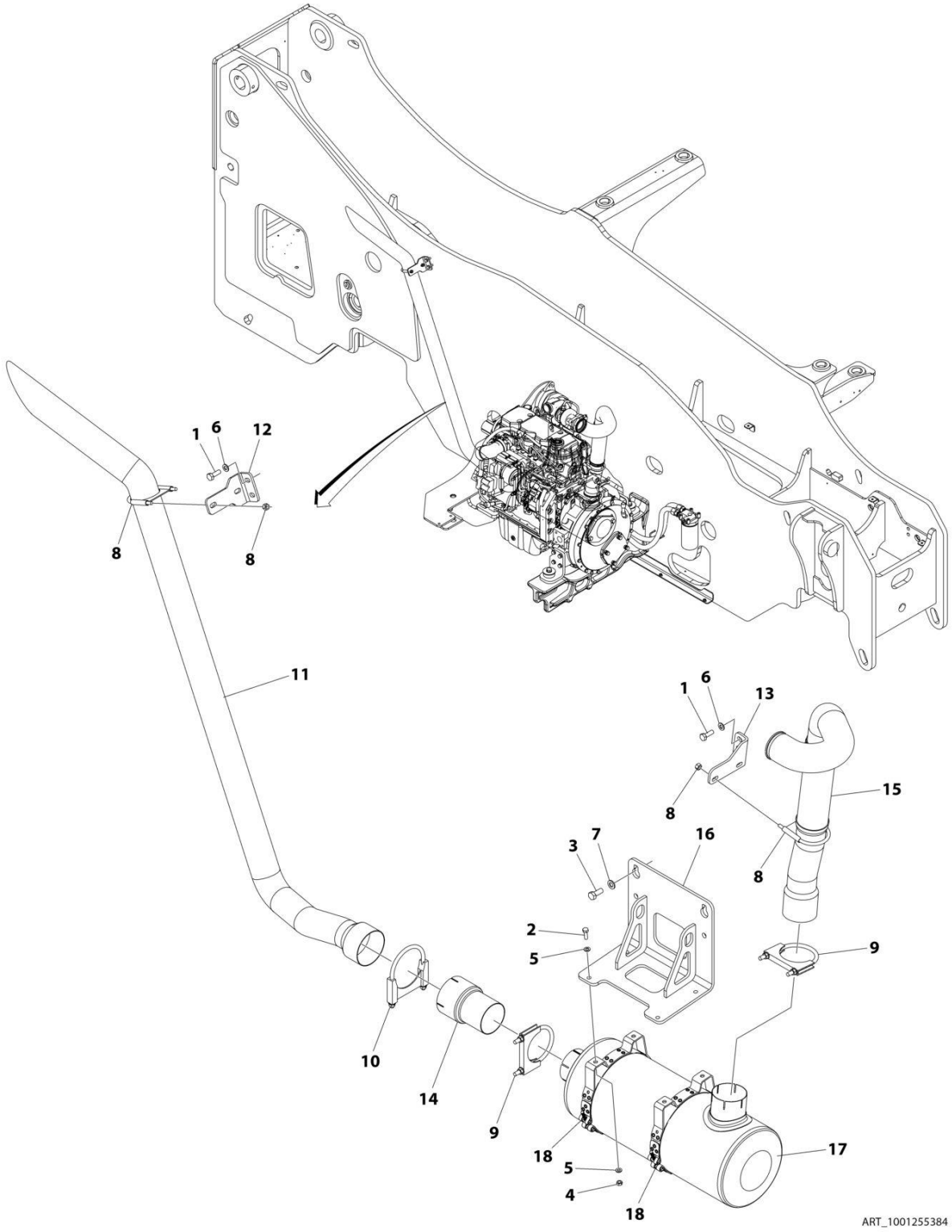

FIGURE 4-44. EXHAUST INSTALLATION (CUMMINS 4.5L - 12010)

ITEM	PART NUMBER	QTY	DESCRIPTION	REV
	1001255384	Ref	EXHAUST INSTALLATION	A
1	0701014	4	Bolt M10 x 30	
2	0760812	4	Bolt M8 x 25	
3	0761214	4	Bolt M12 x 30	
4	3290801	4	Nut M8	
5	4811900	8	Washer M8	
6	4812000	4	Washer M10	
7	4812100	4	Washer M12	
8	24921332	2	Clamp	
9	86671583	2	Clamp	
10	86883127	1	Clamp	
11	1001241326	1	Pipe	
12	1001242740	1	Bracket	
13	1001242741	1	Bracket	
14	1001255385	1	Pipe	
15	1001255386	1	Pipe	
16	1001255387	1	Bracket	
17	1001263267	1	Muffler	
18	1001263268	2	Clamp	

FIGURE 4-45. CAB - HEATER LINES INSTALLATION (2733)

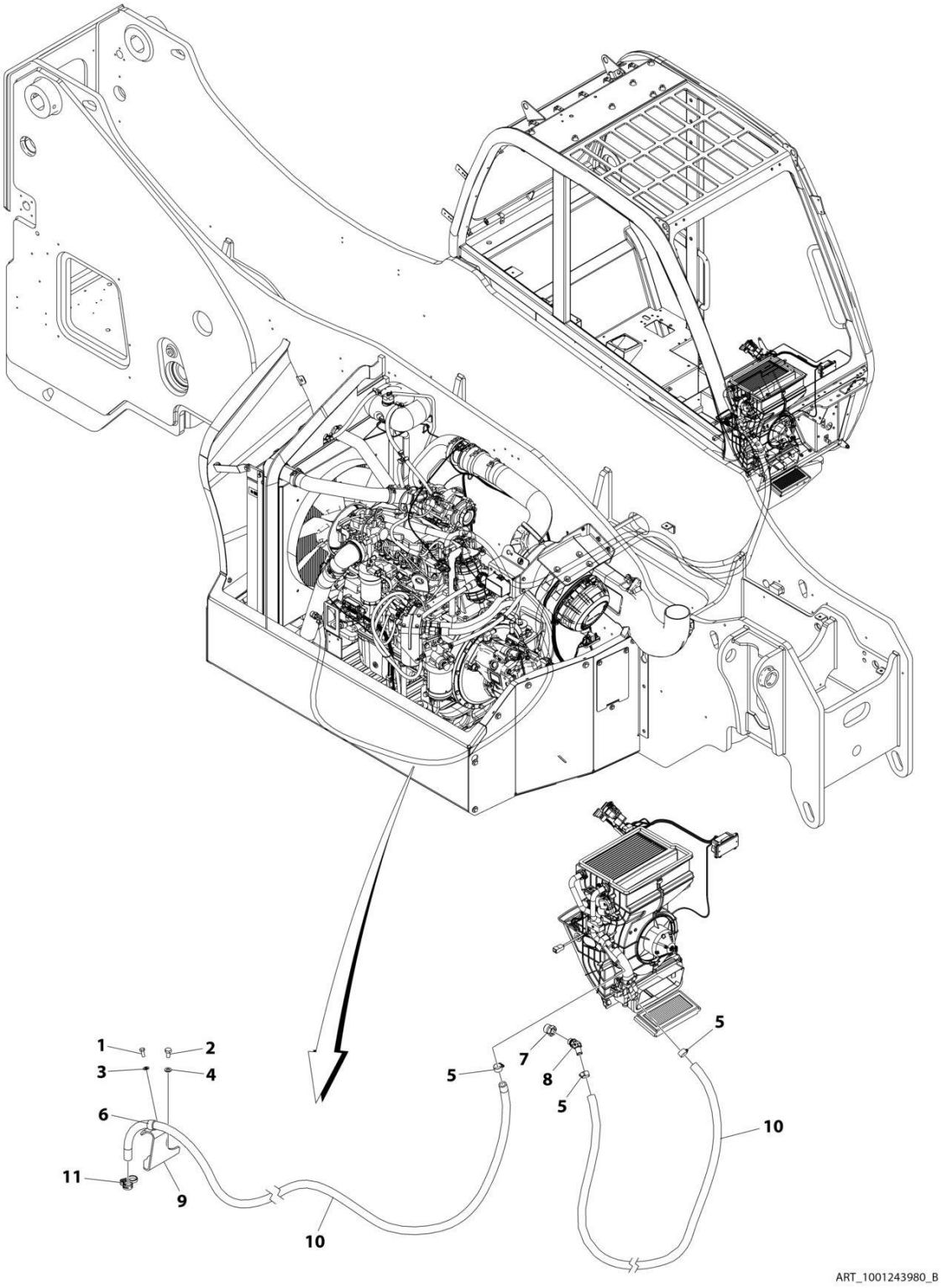

FIGURE 4-45. CAB - HEATER LINES INSTALLATION (2733)

ITEM	PART NUMBER	QTY	DESCRIPTION	REV
	1001243980	Ref	Cab - Heater Lines Installation	B
1	0700810	1	Bolt, M8X20	
2	0701010	2	Bolt, M10X20	
3	4811900	1	Washer, M8	
4	4812000	2	Washer, M10	
5	8410009	3	Gear Clamp	
6	1001100319	1	Clip	
7	1001238152	1	Fitting	
8	1001238153	1	Fitting, Hose Barb	
9	1001245142	1	Bracket	
10	82033995	7 m	Hose	
11	1001202526	1	Clamp	

FIGURE 4-46. CAB - HEATER LINES INSTALLATION (12010)

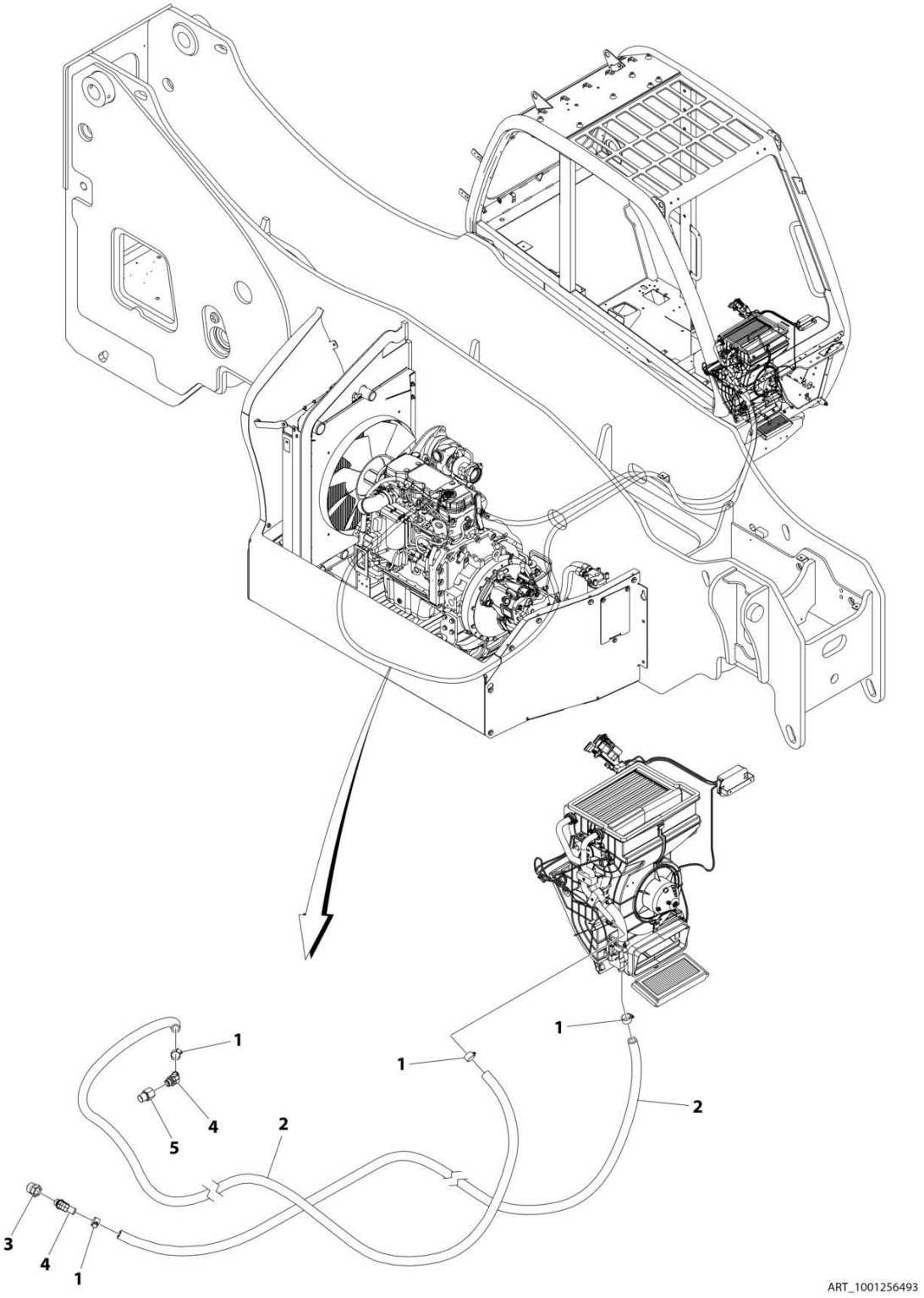

FIGURE 4-46. CAB - HEATER LINES INSTALLATION (12010)

ITEM	PART NUMBER	QTY	DESCRIPTION	REV
	1001256493	Ref	CAB - HEATER LINES INSTALLATION	A
1	8410009	4	Gear Clamp	
2	82033995	7.3 m / 24 ft	Hose	
3	1001238152	1	Fitting	
4	1001238153	2	Fitting, Hose Barb	
5	1001245075	1	Fitting	

FIGURE 4-47. DEF PUMP AND CONTROL INSTALLATION

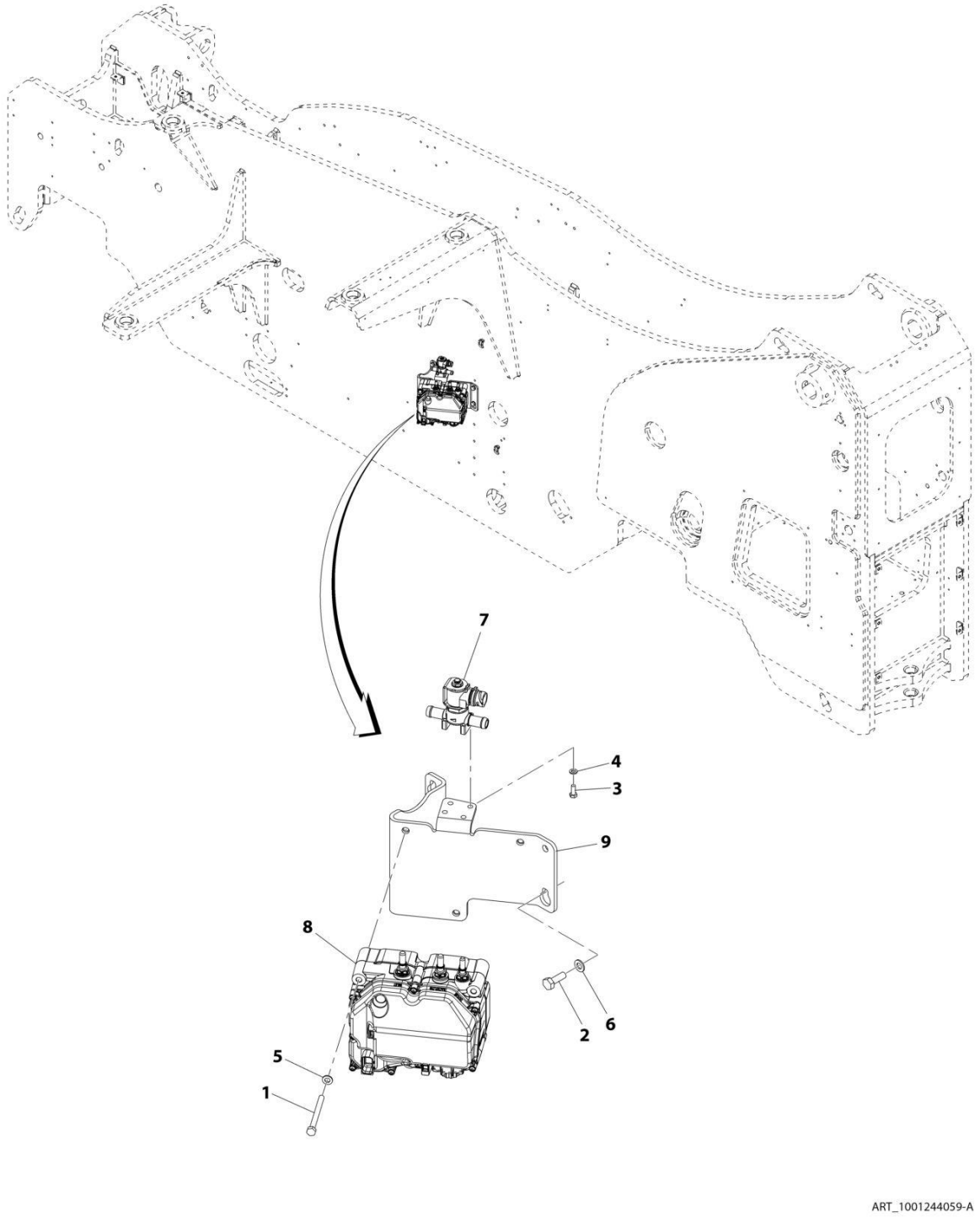

FIGURE 4-47. DEF PUMP AND CONTROL INSTALLATION

ITEM	PART NUMBER	QTY	DESCRIPTION	REV
	1001244059	Ref	DEF Pump and Control Installation	A
1	0700826	3	Bolt, M8X90	
2	0701014	4	Bolt, M10X30	
3	0760608	4	Bolt, M6X16	
4	4811700	4	Washer, M6	
5	4811900	3	Washer, M8	
6	4812000	4	Washer, M10	
7	1001199670	1	Valve, DEF Tank Coolant Flow	
8	1001213210	1	Pump, DEF Module (See Separate Breakdown in HYDRAULIC COMPONENTS Section)	
9	1001241702	1	Bracket	

FIGURE 4-48. DEF LINES INSTALLATION

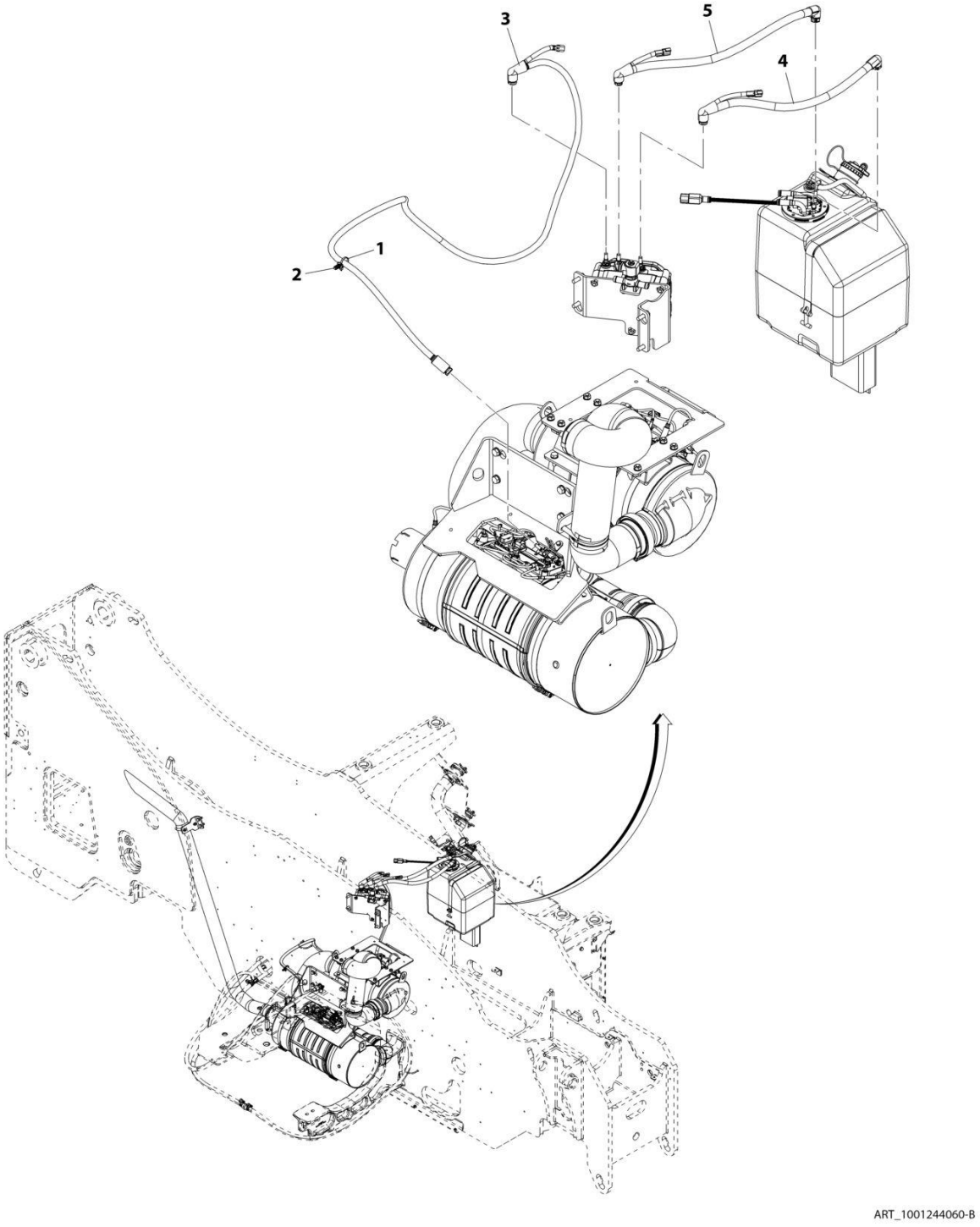

FIGURE 4-48. DEF LINES INSTALLATION

ITEM	PART NUMBER	QTY	DESCRIPTION	REV
	1001244060	Ref	DEF Lines Installation	B
1	1001008559	1	Strap, Cable	
2	1001202986	1	Strap Push Mount	
3	1001241684	1	Hose	
4	1001241704	1	Hose	
5	1001241705	1	Hose	

FIGURE 4-49. DOC INSTALLATION

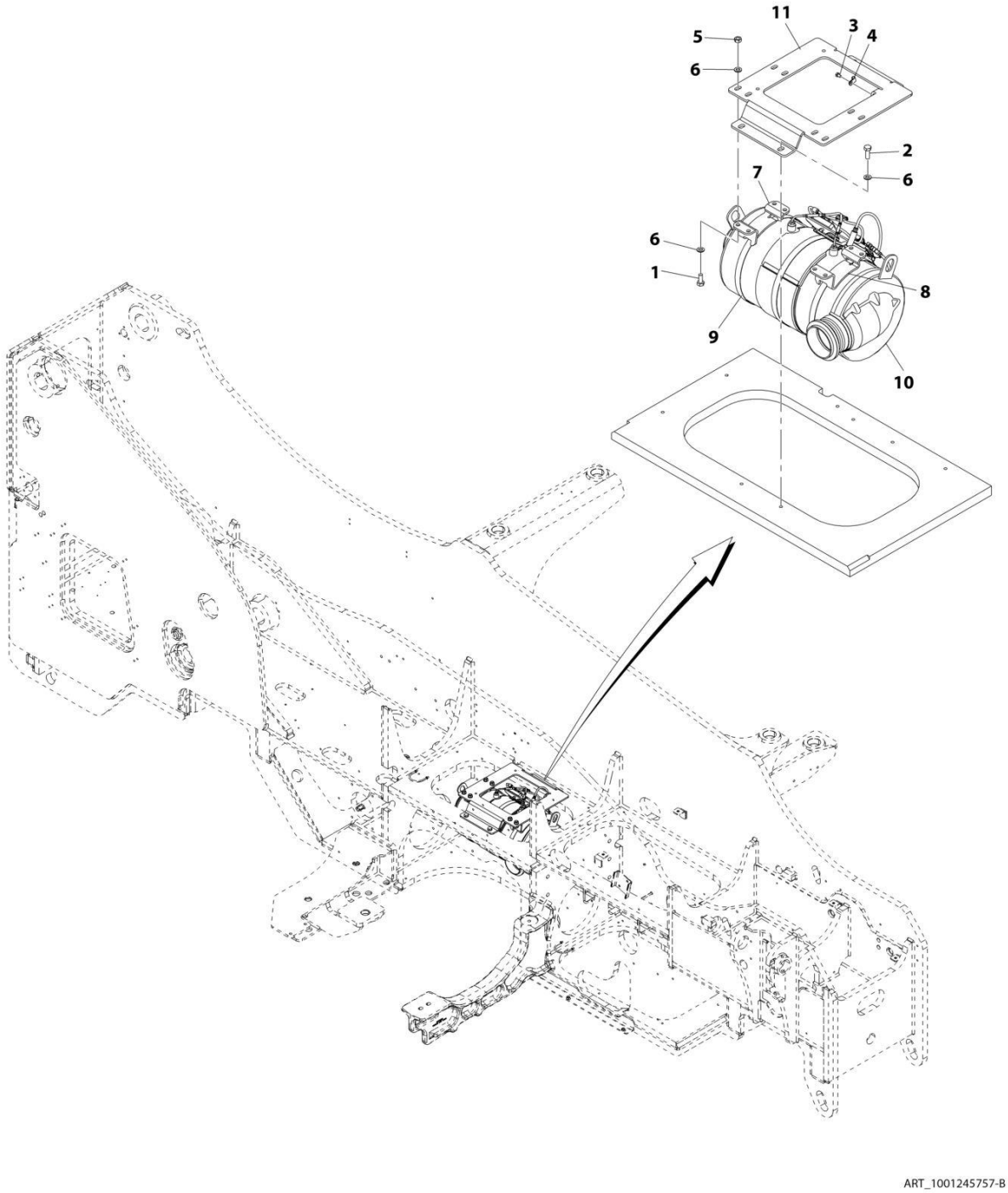

FIGURE 4-49. DOC INSTALLATION

ITEM	PART NUMBER	QTY	DESCRIPTION	REV
	1001245757	Ref	DOC Installation	B
1	0701012	8	Bolt, M10X25	
2	0701014	4	Bolt, M10X30	
3	0760605	1	Bolt, M6X10	
4	1320136	1	Clamp, Cable	
5	3291001	8	Nut, M10X1.5	
6	4812000	20	Washer, M10	
7	1001159881	1	Bracket	
8	1001159882	1	Bracket	
9	1001176945	2	Strap	
10	1001236530	1	Muffler	
11	1001242739	1	Bracket	

FIGURE 4-50. SCR INSTALLATION

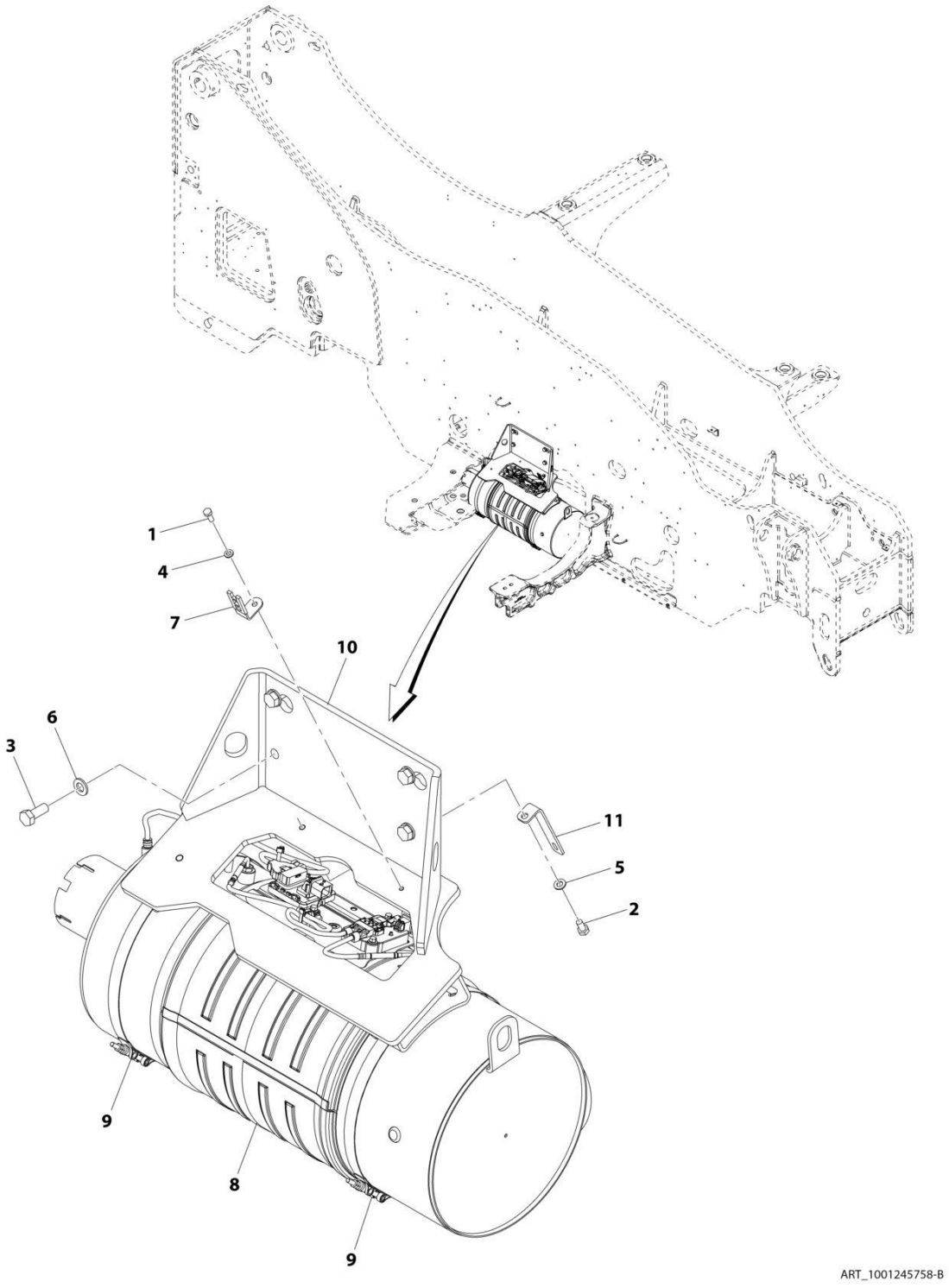

FIGURE 4-50. SCR INSTALLATION

ITEM	PART NUMBER	QTY	DESCRIPTION	REV
	1001245758	Ref	SCR Installation	B
1	0760608	1	Bolt, M6X16	
2	0760808	1	Bolt, M8X16	
3	0761214	4	Bolt, M12X30	
4	4811700	1	Washer, M6	
5	4811900	1	Washer, M8	
6	4812100	4	Washer, M12	
7	1001025749	1	Clip	
8	1001236529	1	Muffler	
9	1001238755	2	Strap	
10	1001242734	1	Bracket	
11	1001247578	1	Bracket	

FIGURE 4-51. A/C PUMP INSTALLATION (CUMMINS 4.5L)

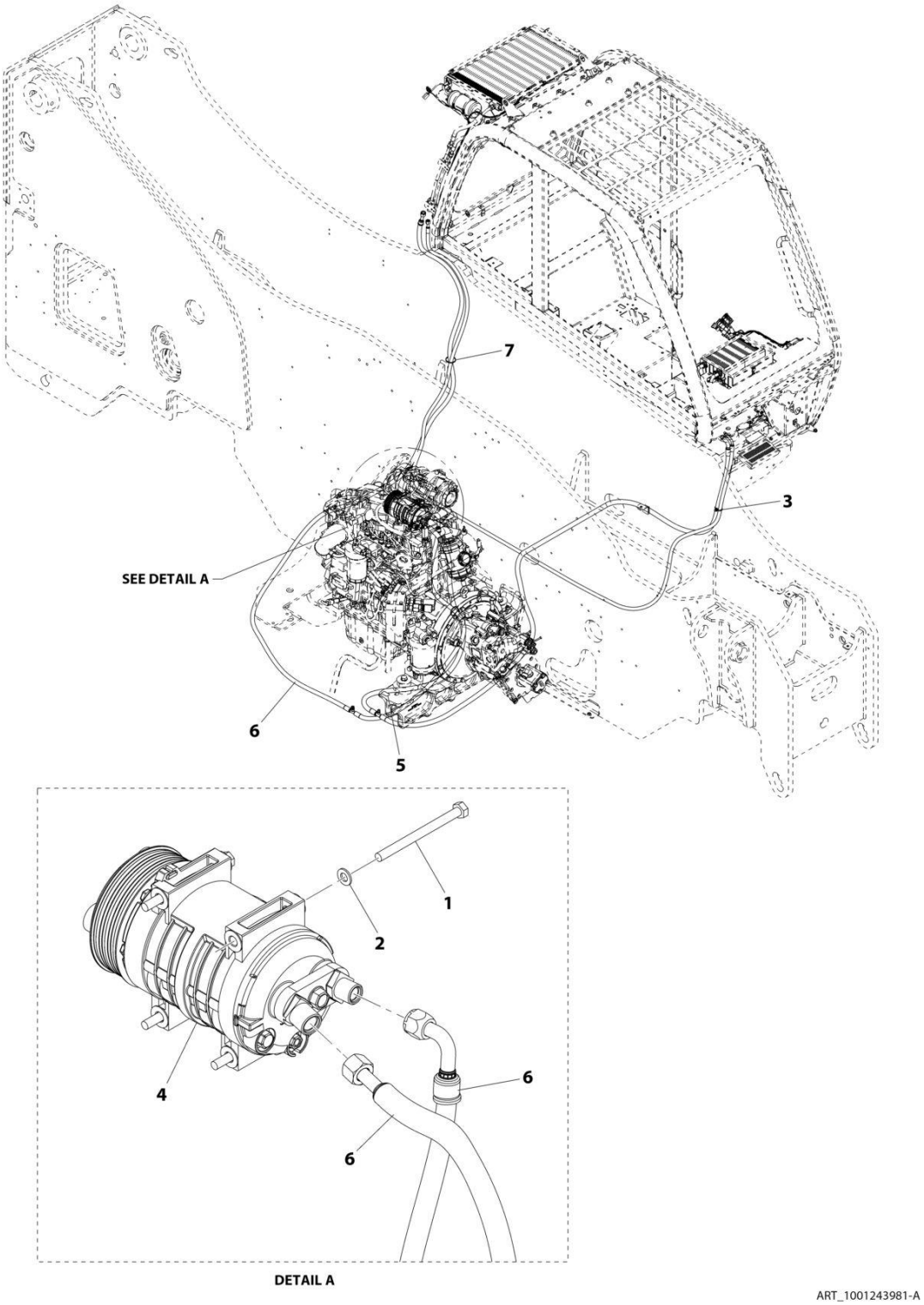

FIGURE 4-51. A/C PUMP INSTALLATION (CUMMINS 4.5L)

ITEM	PART NUMBER	QTY	DESCRIPTION	REV
	1001243981	Ref	A/C Pump Installation (Cummins 4.5L)	A
1	0700827	4	Bolt, M8X100	
2	4811900	4	Washer, M8	
3	1001146588	1	Strap, Tie	
4	1001157663	1	Compressor, A/C	
5	1001193026	1	Decal, A/C Refrigerant	
6	1001243982	1	A/C Lines Installation (See Separate Breakdown in this Section)	
7	1001008559	2	Strap, Cable	

FIGURE 4-52. A/C LINES INSTALLATION

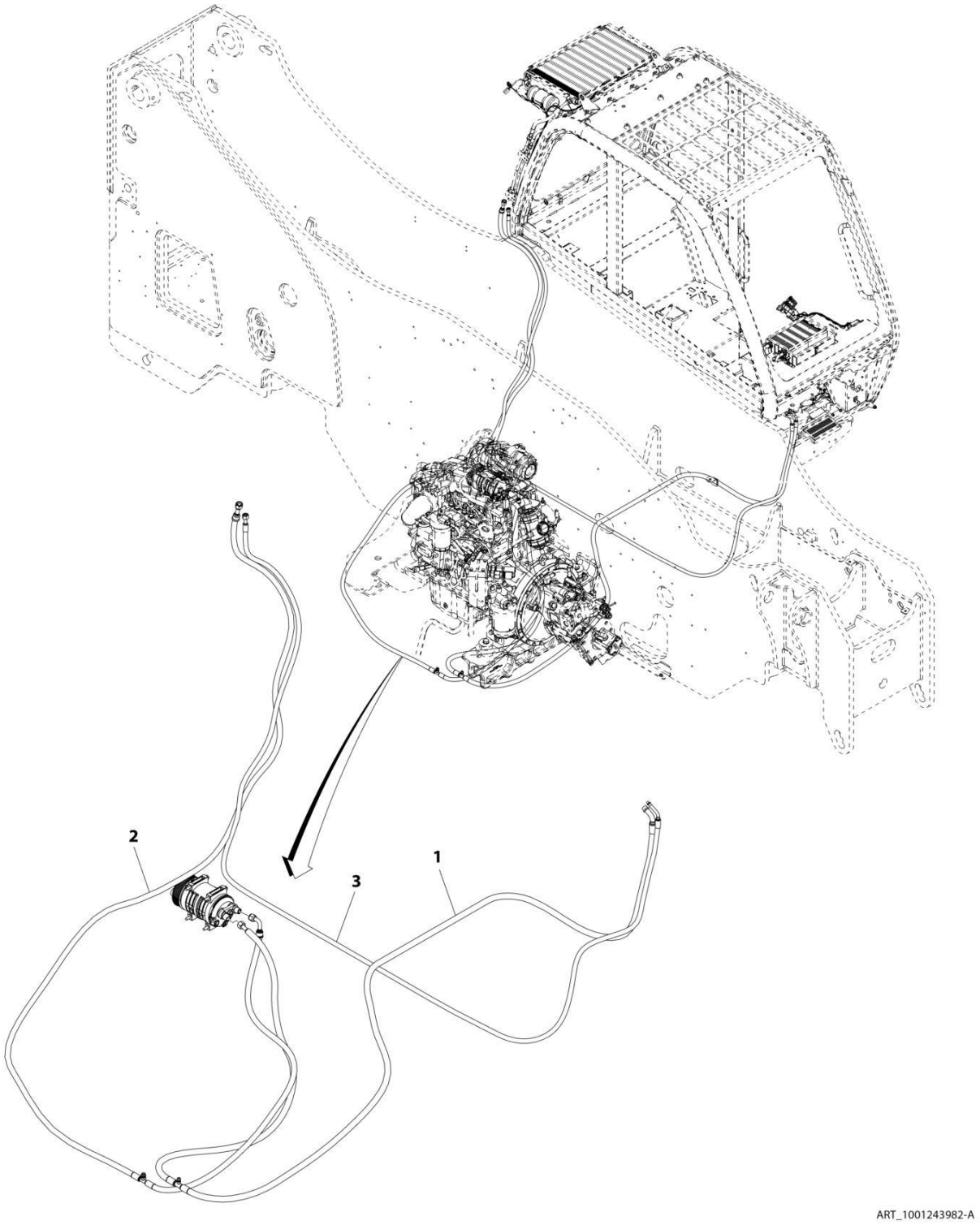

FIGURE 4-52. A/C LINES INSTALLATION

ITEM	PART NUMBER	QTY	DESCRIPTION	REV
	1001243982	Ref	A/C Line Installation	A
1	1001243840	1	Hose	
2	1001243841	1	Hose	
3	1001245708	1	Hose	

FIGURE 4-53. BREATHER TUBE HEATER INSTALLATION

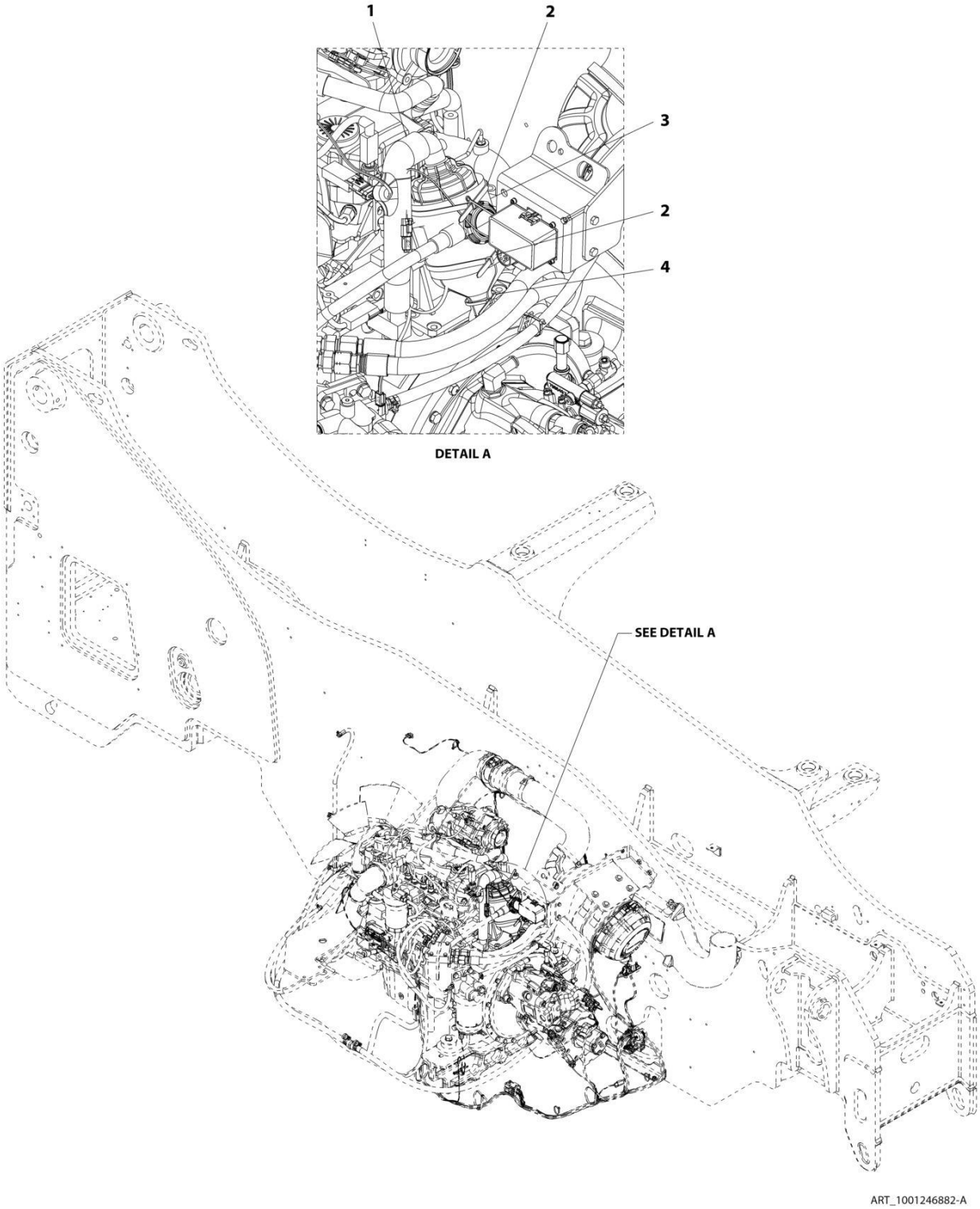

FIGURE 4-53. BREATHER TUBE HEATER INSTALLATION

ITEM	PART NUMBER	QTY	DESCRIPTION	REV
	1001246882	Ref	Breather Tube Heater Installation	A
1	1001211884	1	Hose	
2	01043892	2	Tie wrap, Long	
3	1001211503	1	Insulate, CV Filter	
4	86683122	1	Tie wrap, Short	

FIGURE 4-54. TRANSMISSION HYDROSTATIC ADAPTER INSTALLATION

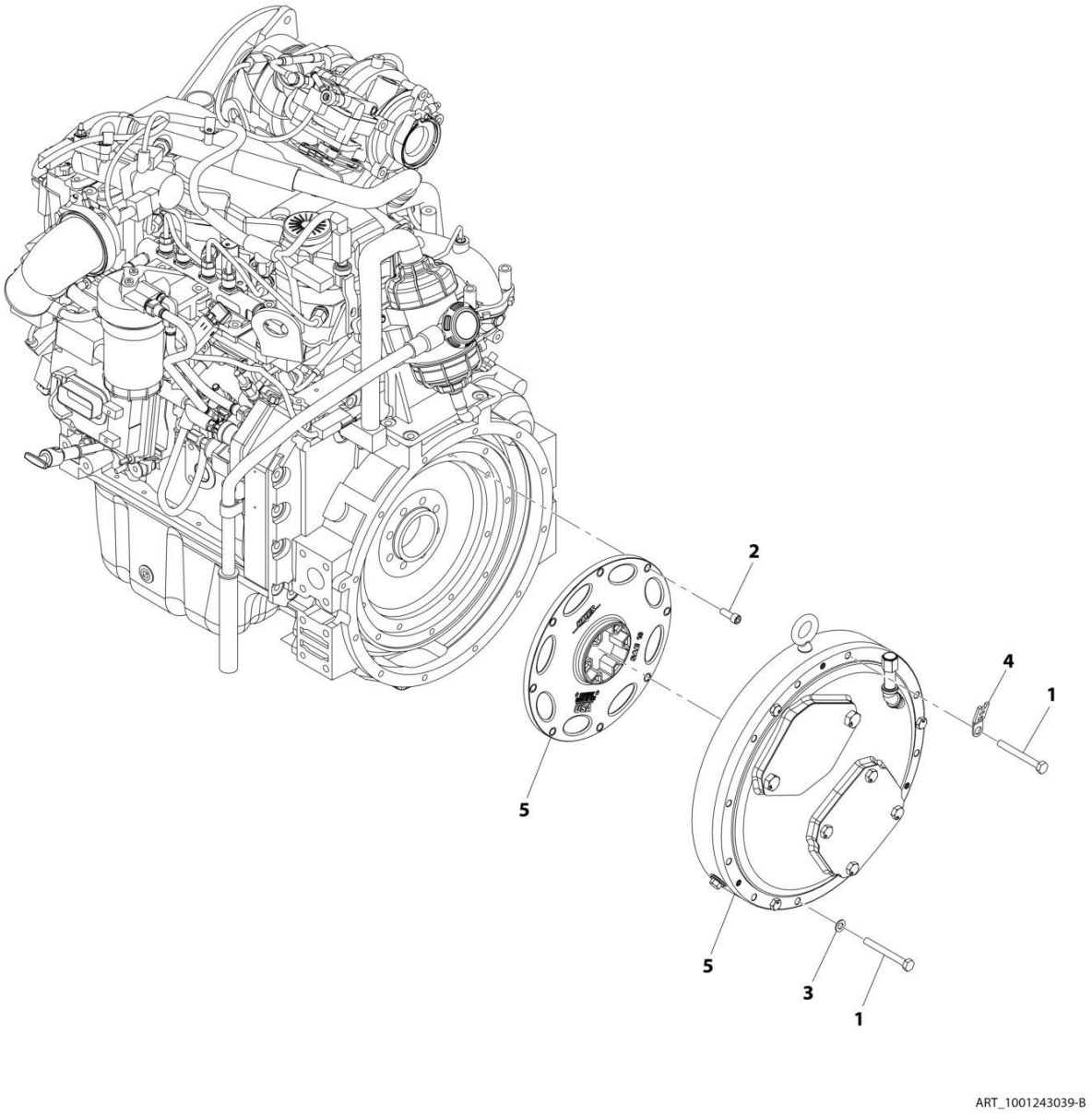

FIGURE 4-54. TRANSMISSION HYDROSTATIC ADAPTER INSTALLATION

ITEM	PART NUMBER	QTY	DESCRIPTION	REV
	1001243039	Ref	Transmission Hydrostatic Adapter Installation	B
1	0701026	12	Bolt, M10X90	
2	3931616	8	Bolt 3/8-16X1	
3	4812000	11	Washer, M10	
4	1001025750	1	Clip	
5	1001256526	1	Gear, HY-Stat Dual Drive	

FIGURE 4-55. REMOTE OIL FILTER INSTALLATION (2733)

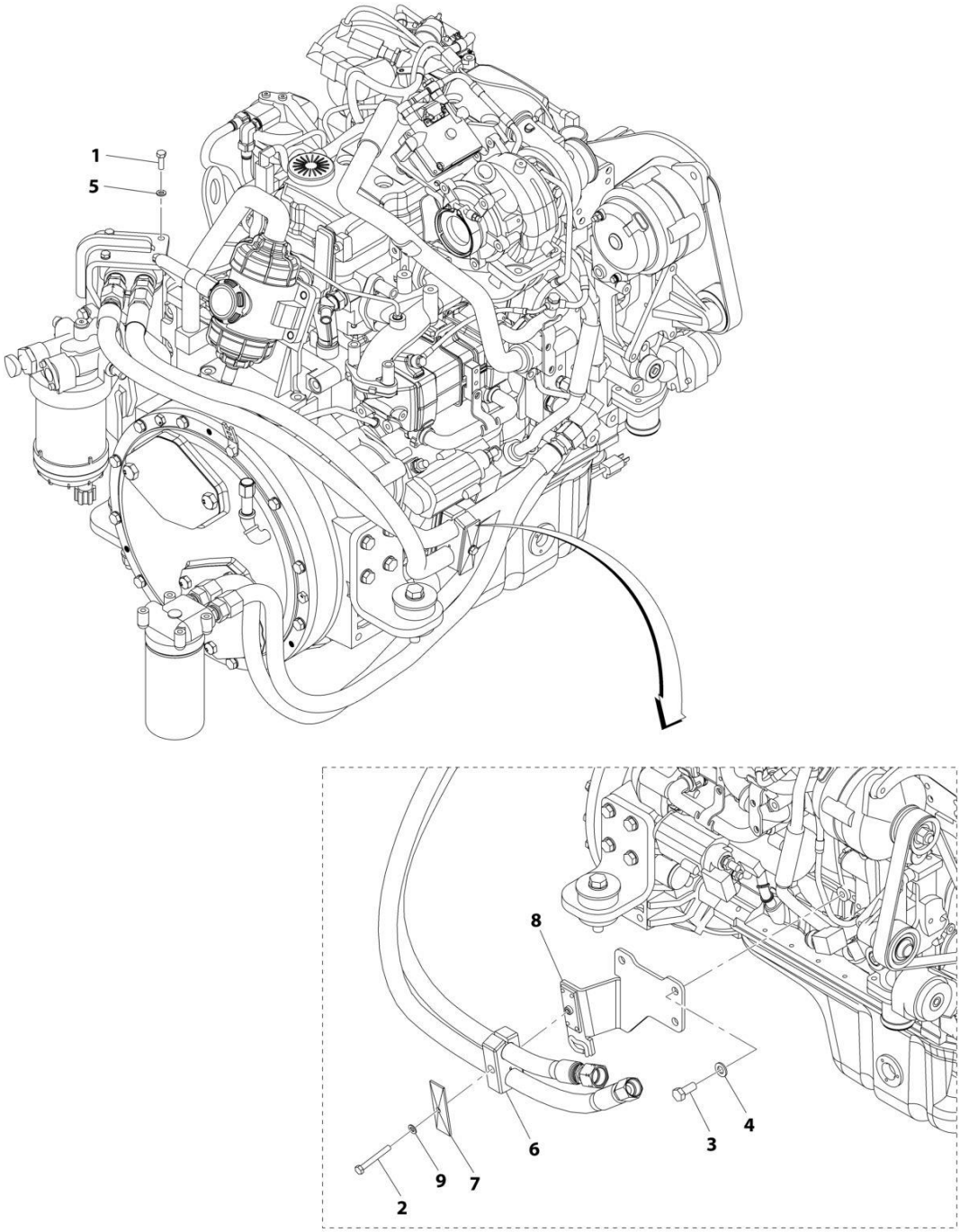

FIGURE 4-55. REMOTE OIL FILTER INSTALLATION (2733)

ITEM	PART NUMBER	QTY	DESCRIPTION	REV
	1001244046	Ref	Remote Oil Filter Installation	C
1	0700812	4	Bolt, M8X25	
2	0700821	1	Bolt, M8X65	
3	0761214	3	Bolt, M8X30	
4	4812100	3	Washer, 12mm	
5	4831900	4	Washer, Lock M8	
6	8750024	1	Clamp Set	
7	8750025	1	Cover Plate	
8	1001246178	1	Bracket	
9	4811900	1	Washer, 8mm	

FIGURE 4-56. REMOTE OIL FILTER INSTALLATION (12010)

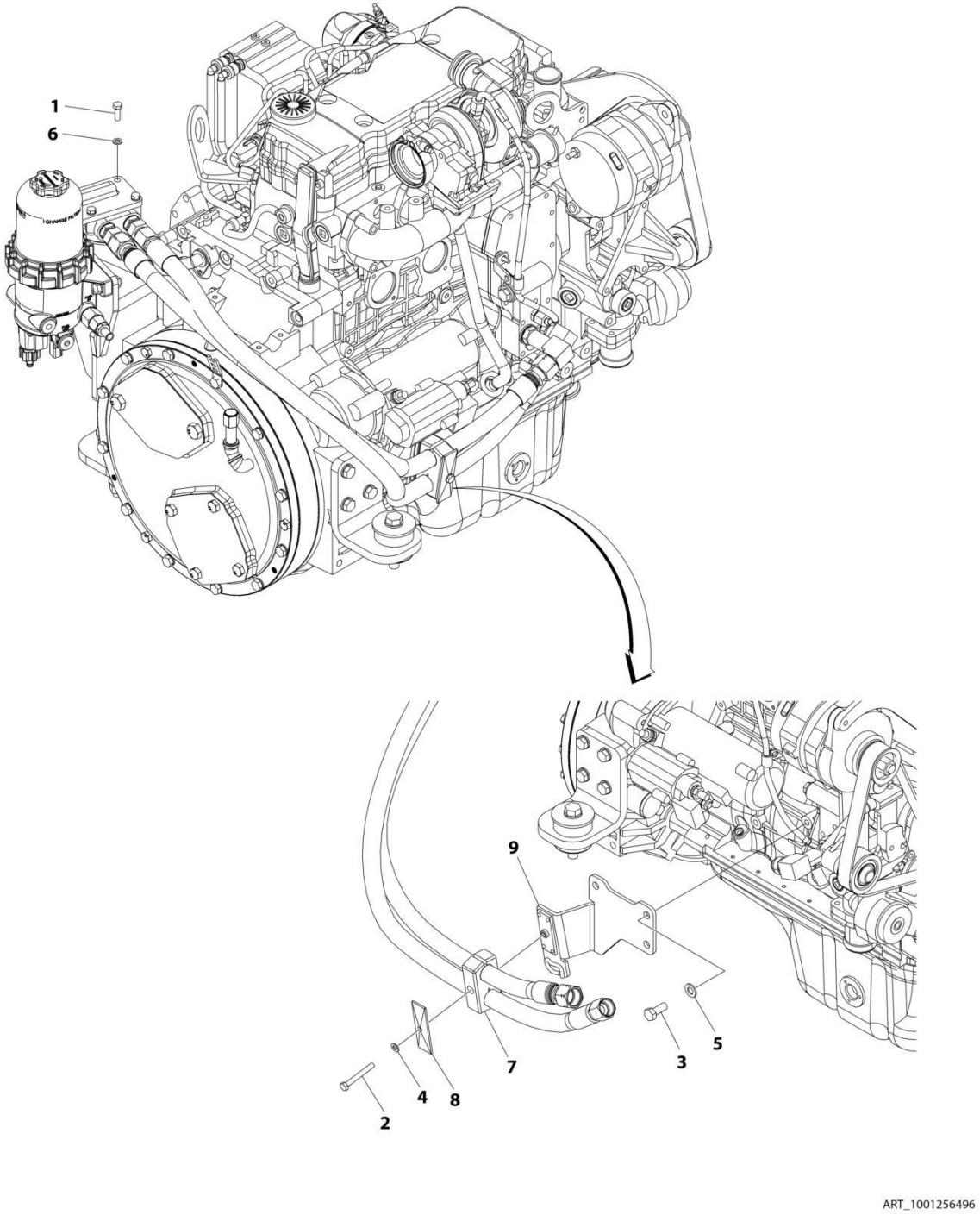

FIGURE 4-56. REMOTE OIL FILTER INSTALLATION (12010)

ITEM	PART NUMBER	QTY	DESCRIPTION	REV
	1001256496	Ref	REMOTE OIL FILTER INSTALLATION	A
1	0700812	4	Bolt M8 x 25	
2	0700821	1	Bolt M8 x 65	
3	0761214	3	Bolt M12 x 30	
4	4811900	1	Washer M8	
5	4812100	3	Washer M12	
6	4831900	4	Washer M8	
7	8750024	1	Clamp Set	
8	8750025	1	Cover Plate	
9	1001246178	1	Bracket	

FIGURE 4-57. OIL DRAIN HOSE INSTALLATION

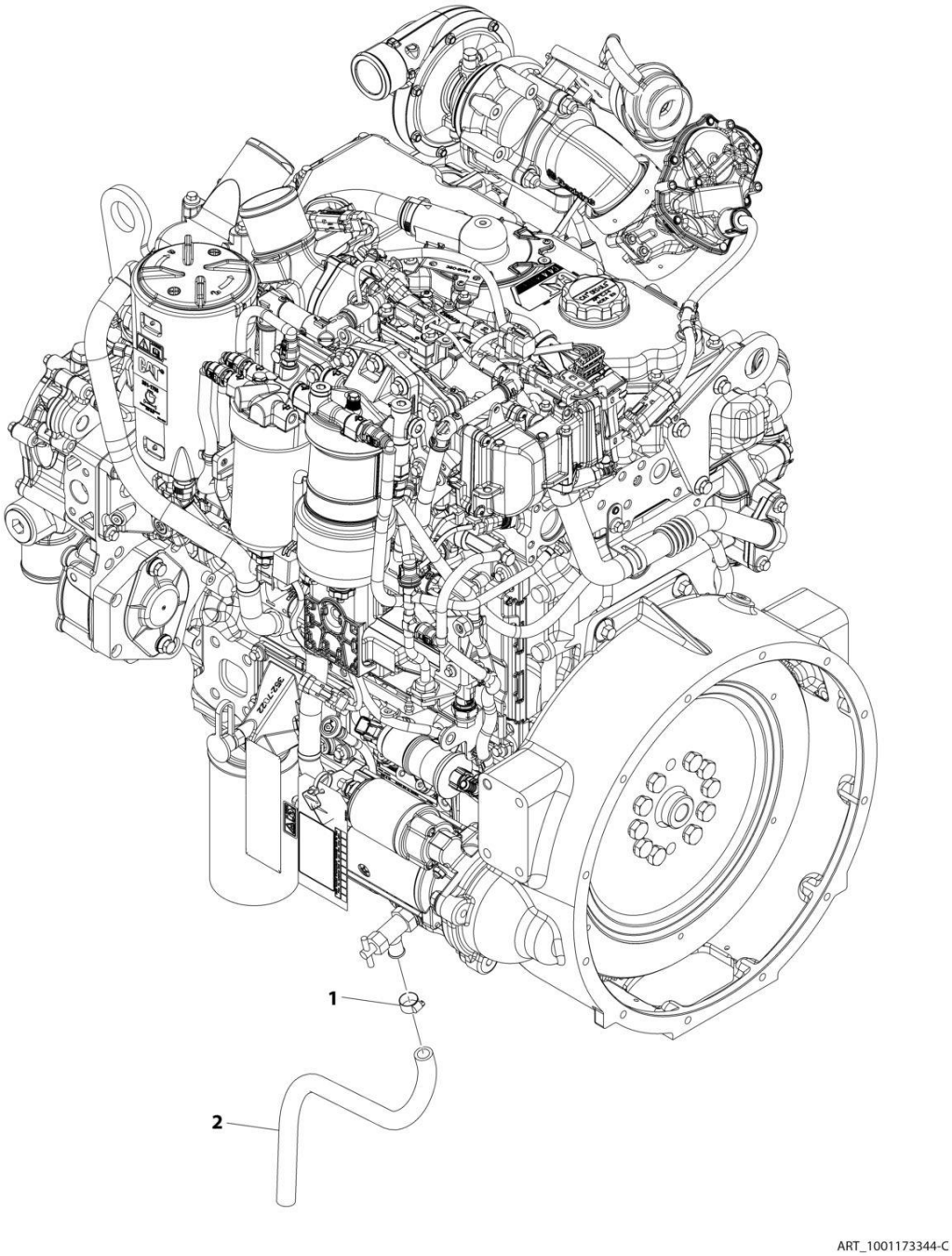

FIGURE 4-57. OIL DRAIN HOSE INSTALLATION

ITEM	PART NUMBER	QTY	DESCRIPTION	REV
	1001173344	Ref	Oil Drain Hose Installation	C
1	8410009	1	Gear Clamp	
2	1001213237	1	Hose	

FIGURE 4-58. QUICK DRAIN OIL VALVE INSTALLATION

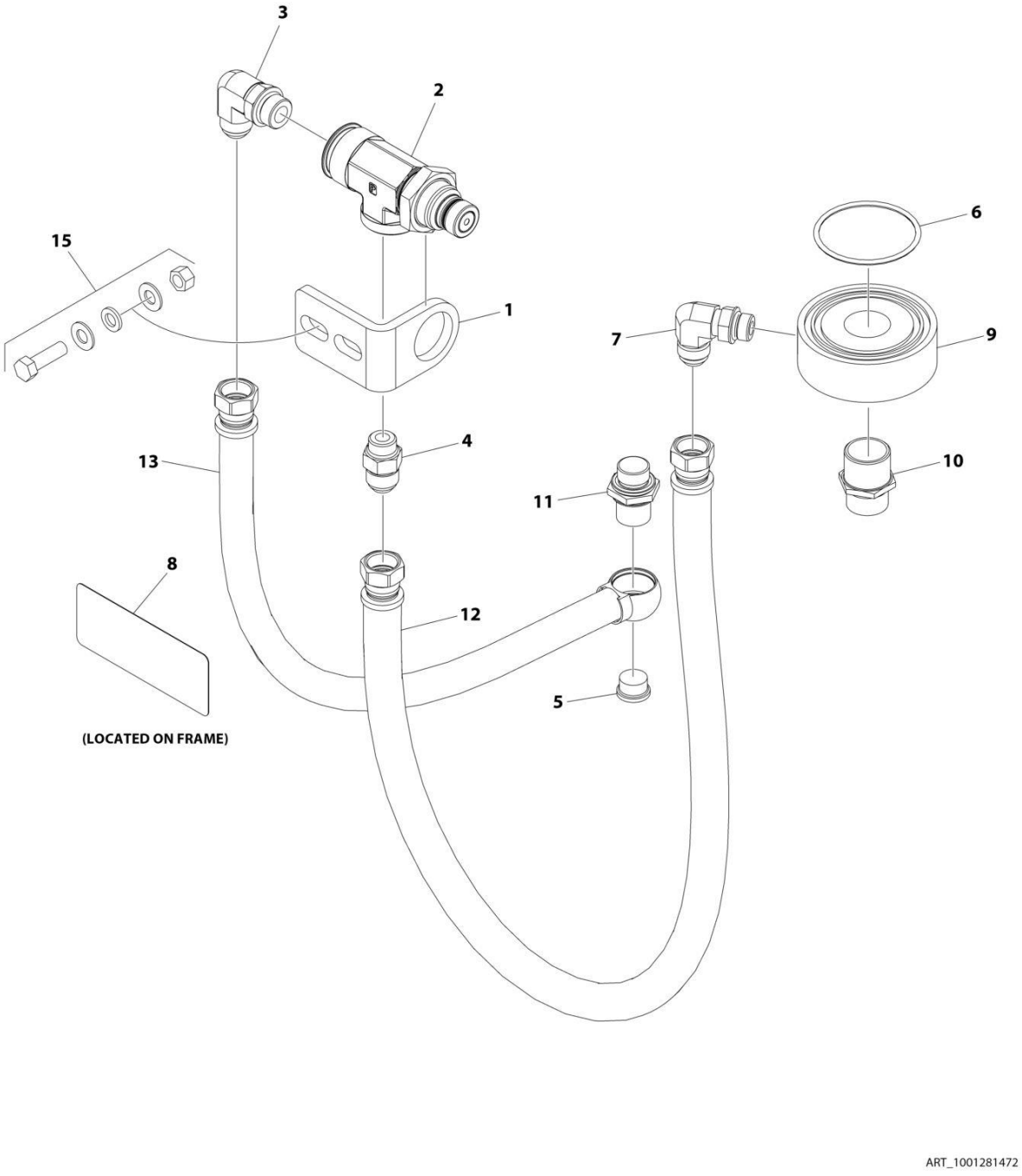

FIGURE 4-58. QUICK DRAIN OIL VALVE INSTALLATION

ITEM	PART NUMBER	QTY	DESCRIPTION	REV
	1001281472	Ref	QUICK DRAIN OIL VALVE INSTALLATION	A
1	1001281297	1	Bracket	
2	1001281298	1	Valve, Small Quickfit	
3	1001281301	1	Fitting, 90	
4	1001281302	1	Fitting, Straight	
5	1001281304	1	Plug, Quickfit	
6	1001281311	1	O-Ring	
7	1001281359	1	Valve, Check Quickfit	
8	1001281360	1	Decal - RPM Quickfit	
9	1001281380	1	Filter, Ring	
10	1001281386	1	Fitting, Straight	
11	1001281394	1	Fitting, Straight Quickfit	
12	1001281399	1	Hose	
13	1001281400	1	Hose	
14	1001281656	AR	Tie-Strap (Not Shown)	
15	1001281888	2	Bolt 3/8 x 1-1/4	

SECTION 5 - DRIVE TRAIN

FIGURE 5-1. DRIVETRAIN INSTALLATION

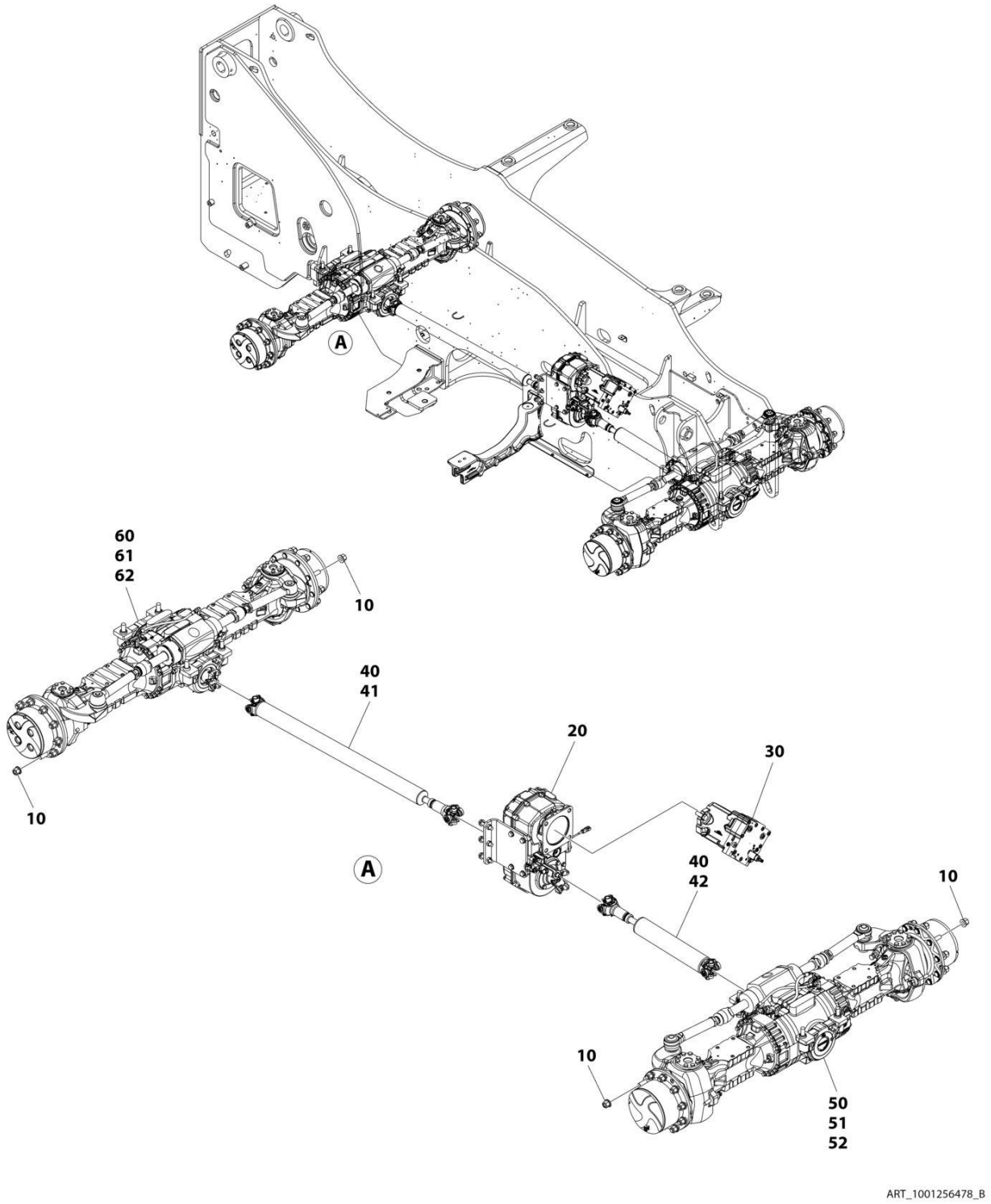

FIGURE 5-1. DRIVETRAIN INSTALLATION

ITEM	PART NUMBER	QTY	DESCRIPTION	REV
	1001256478	Ref	DRIVETRAIN INSTALLATION	B
10	91403193	40	Nut M22 x 1.5	
20	1001295916	Ref	Installation, Gearbox (See Separate Breakdown in this Section)	
30	1001244340	Ref	Installation, Hydraulic Motor (See Separate Breakdown in this Section)	
40	1001256479	Ref	Installation, Drive Shaft	
41	1001244036	Ref	Installation, Drive Shaft - Rear (See Separate Breakdown in this Section)	
42	1001256482	Ref	Installation, Drive Shaft - Front (See Separate Breakdown in this Section)	
50	1001256480	Ref	Installation, Front Axle	
51	1001256484	Ref	Installation, Front Axle Lines (See Separate Breakdown in this Section)	
52	1001256485	Ref	Installation, Front Axle Mount (See Separate Breakdown in this Section)	
60	1001256481	Ref	Installation, Rear Axle	
61	1001256486	Ref	Installation, Rear Axle Lines (See Separate Breakdown in this Section)	
62	1001256487	Ref	Installation, Rear Axle Mount (See Separate Breakdown in this Section)	

FIGURE 5-2. GEARBOX INSTALLATION

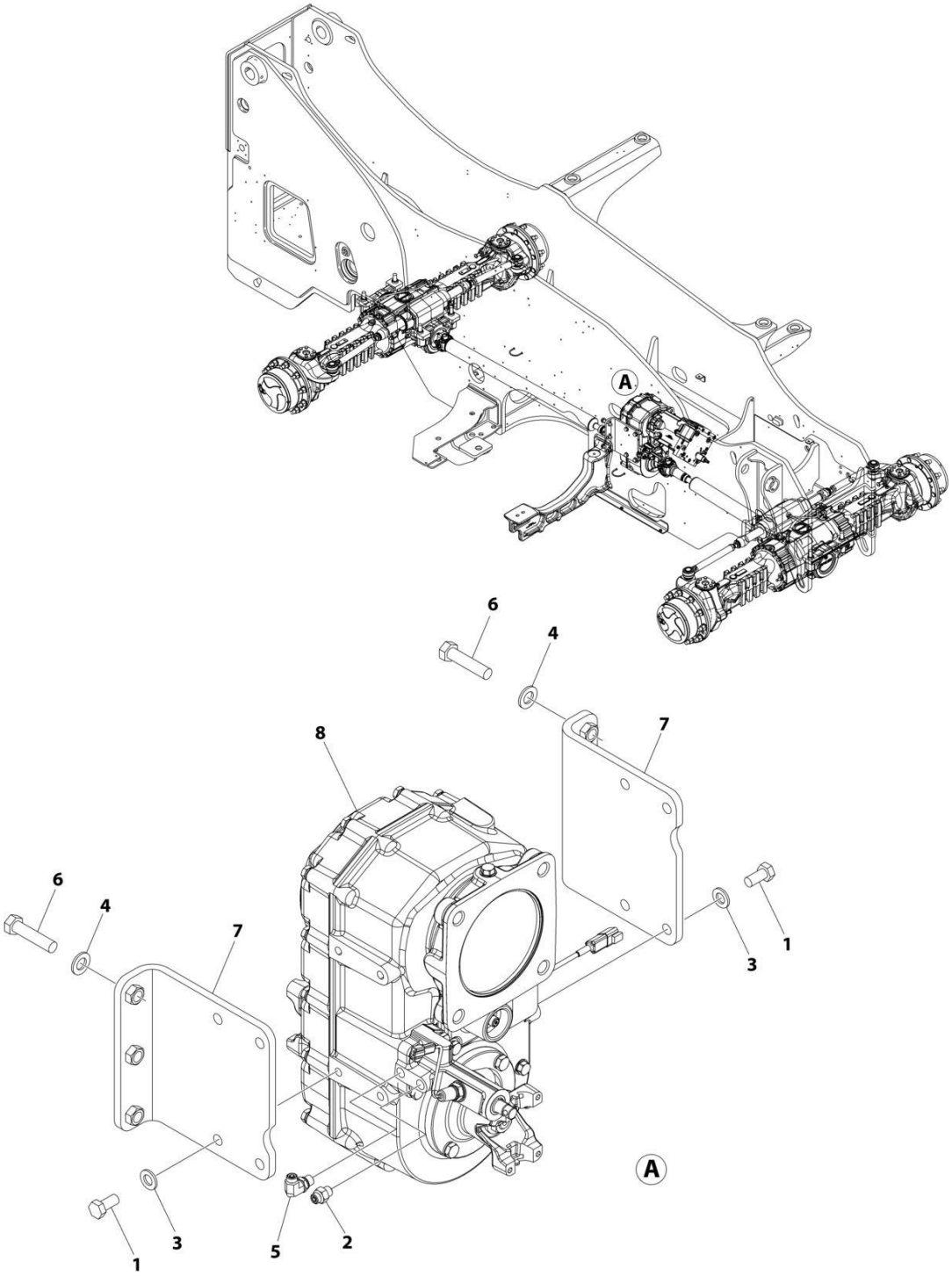

FIGURE 5-2. GEARBOX INSTALLATION

ITEM	PART NUMBER	QTY	DESCRIPTION	REV
	1001295916	Ref	GEARBOX INSTALLATION	A
1	0771414	8	Bolt M14 x 30	
2	2144603	1	Fitting, Straight ORFS	
3	5241400	8	Washer M14	
4	5241600	6	Washer M16	
5	8770241	1	Fitting, 90 ORFS	
6	1001094516	6	Bolt M16 x 70	
7	1001245691	2	Bracket	
8	1001295491	1	Gearbox (See Separate Breakdown in this Seciton)	

FIGURE 5-3. GEARBOX ASSEMBLY

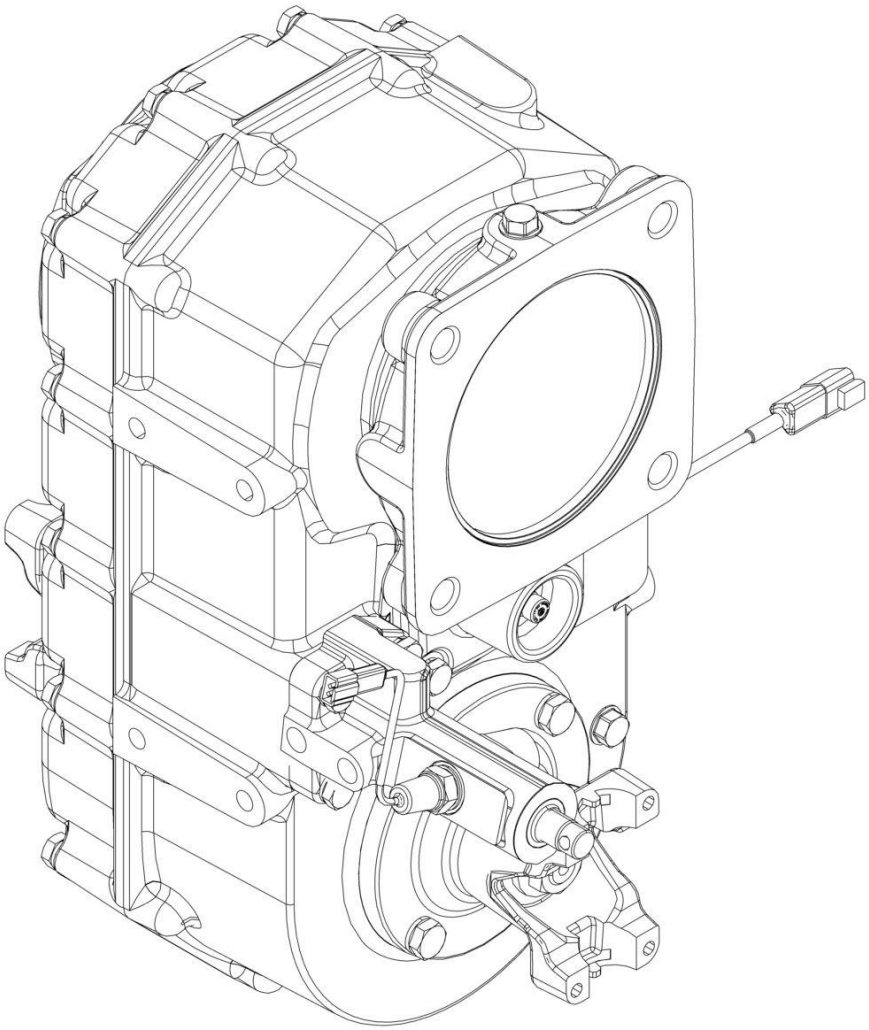

ART_1001295491

FIGURE 5-3. GEARBOX ASSEMBLY

ITEM	PART NUMBER	QTY	DESCRIPTION	REV
	1001295491	Ref	GEARBOX ASSEMBLY	A
	See Note	Ref	Note: No Service Parts Available at Time of Printing	

FIGURE 5-4. HYDRAULIC MOTOR INSTALLATION

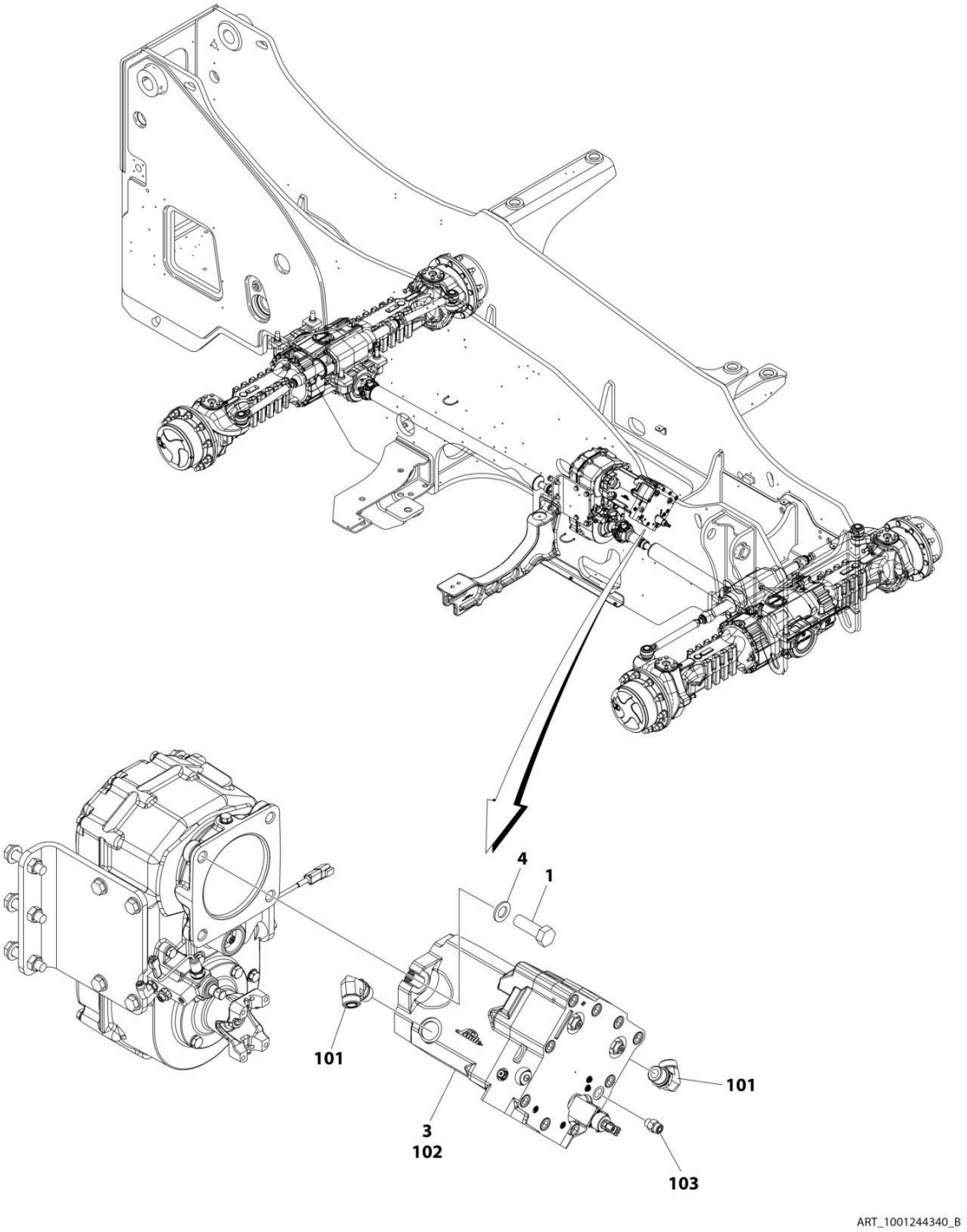

FIGURE 5-4. HYDRAULIC MOTOR INSTALLATION

ITEM	PART NUMBER	QTY	DESCRIPTION	REV
	1001244340	Ref	HYDRAULIC MOTOR INSTALLATION	B
1	0772020	2	Bolt M16 x 50	
3	1001203797	Ref	Sub-Assembly, Drive Motor (includes items 101-103)	C
4	1001244524	2	Washer M16	
101	8770248	2	Fitting	
102	1001268891	1	Hydraulic Motor (See Separate Breakdown in HYDRAULIC COMPONENTS Section) (Note: Check tag on motor before ordering parts)	
103	2144605	1	Fitting, Straight (Used with Hydraulic Motor 1001268891)	

FIGURE 5-5. FRONT DRIVESHAFT INSTALLATION

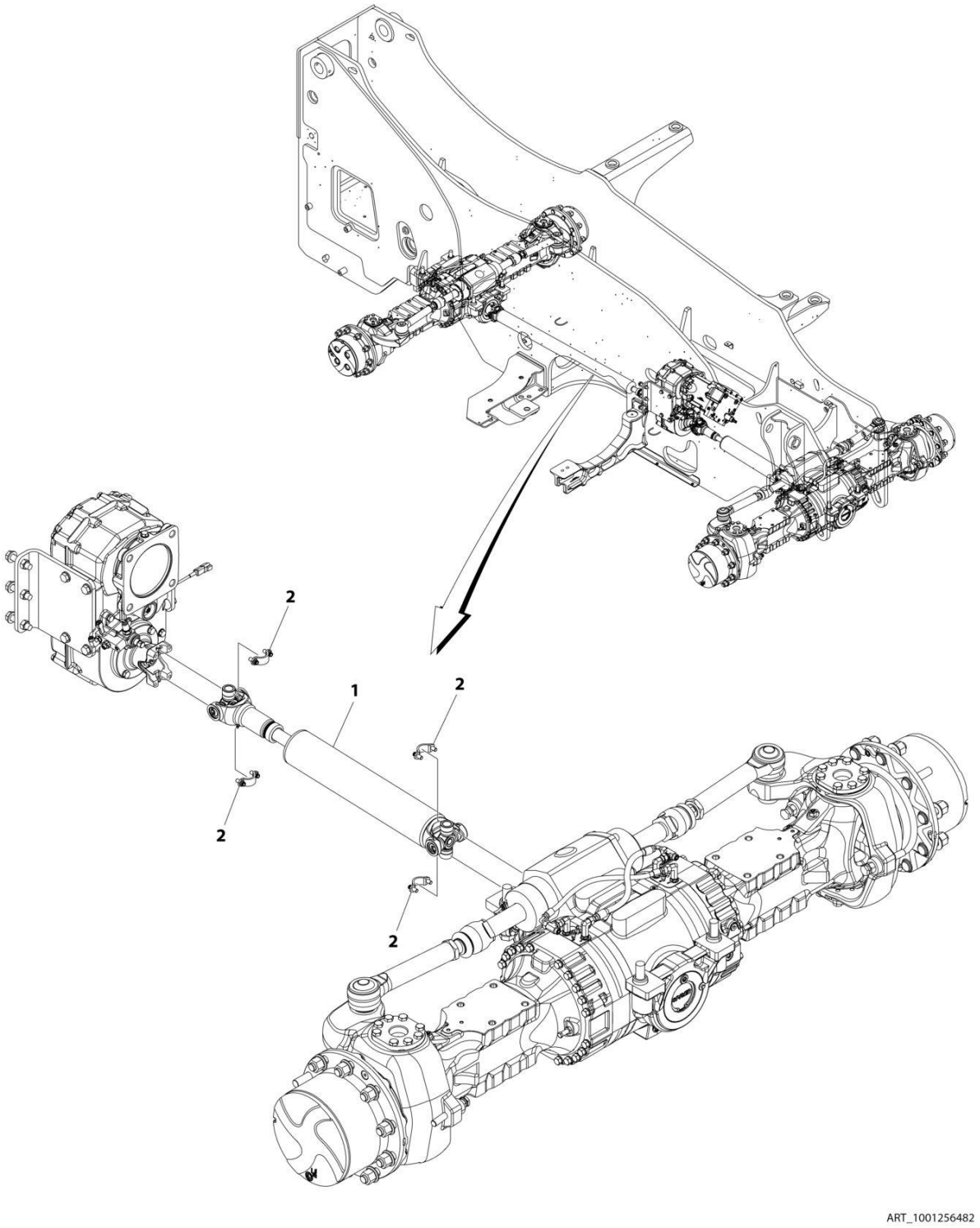

FIGURE 5-5. FRONT DRIVESHAFT INSTALLATION

ITEM	PART NUMBER	QTY	DESCRIPTION	REV
	1001256482	Ref	FRONT DRIVESHAFT INSTALLATION	A
1	1001256449	1	Drive Shaft, Front	
2	8880218-OM	2	Kit, Strap	

FIGURE 5-6. REAR DRIVESHAFT INSTALLATION

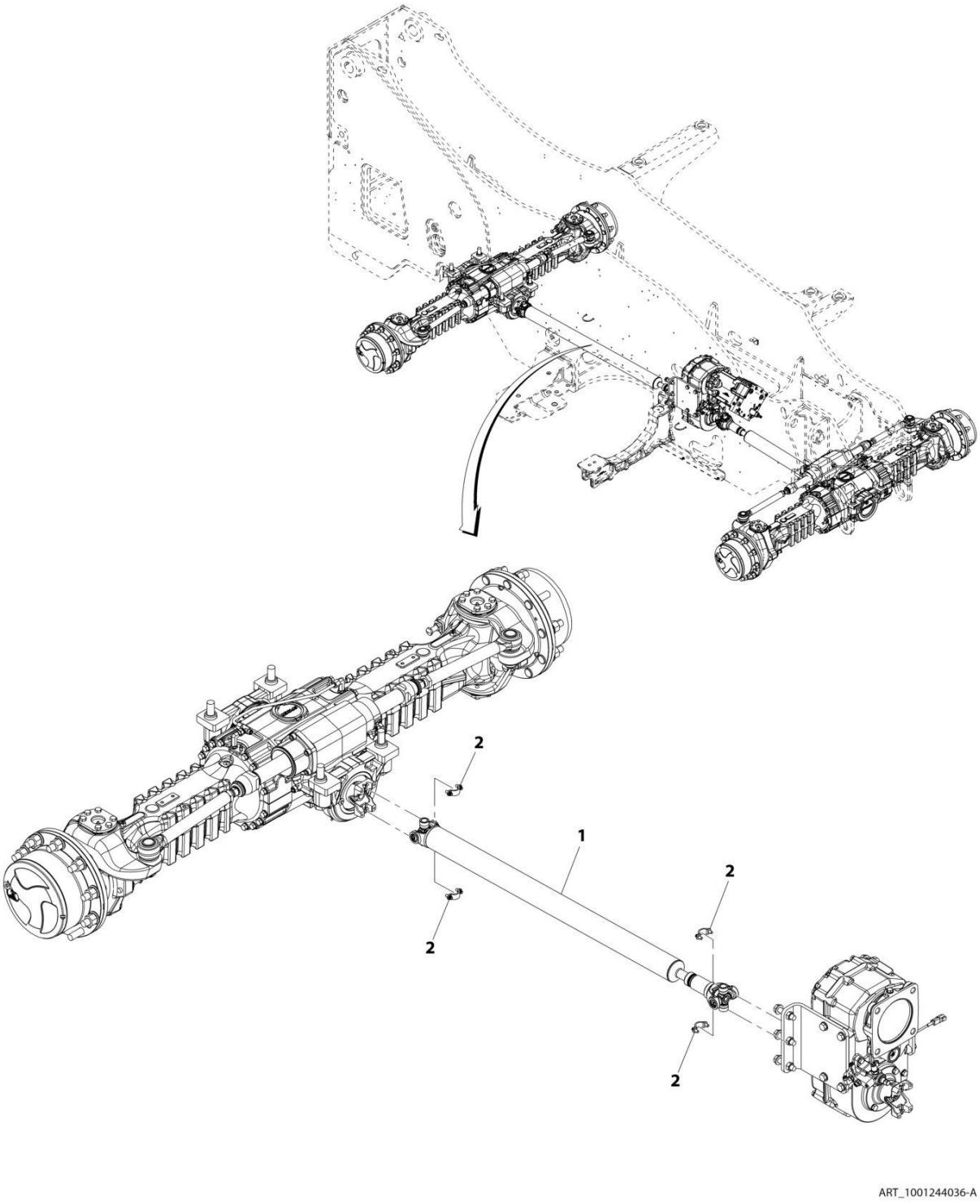

FIGURE 5-6. REAR DRIVESHAFT INSTALLATION

ITEM	PART NUMBER	QTY	DESCRIPTION	REV
	1001244036	Ref	Rear Driveshaft Installation	A
1	1001203806	1	Drive Shaft, Rear	
2	8880218-OM	2	Kit, Strap	

FIGURE 5-7. FRONT AXLE LINES INSTALLATION

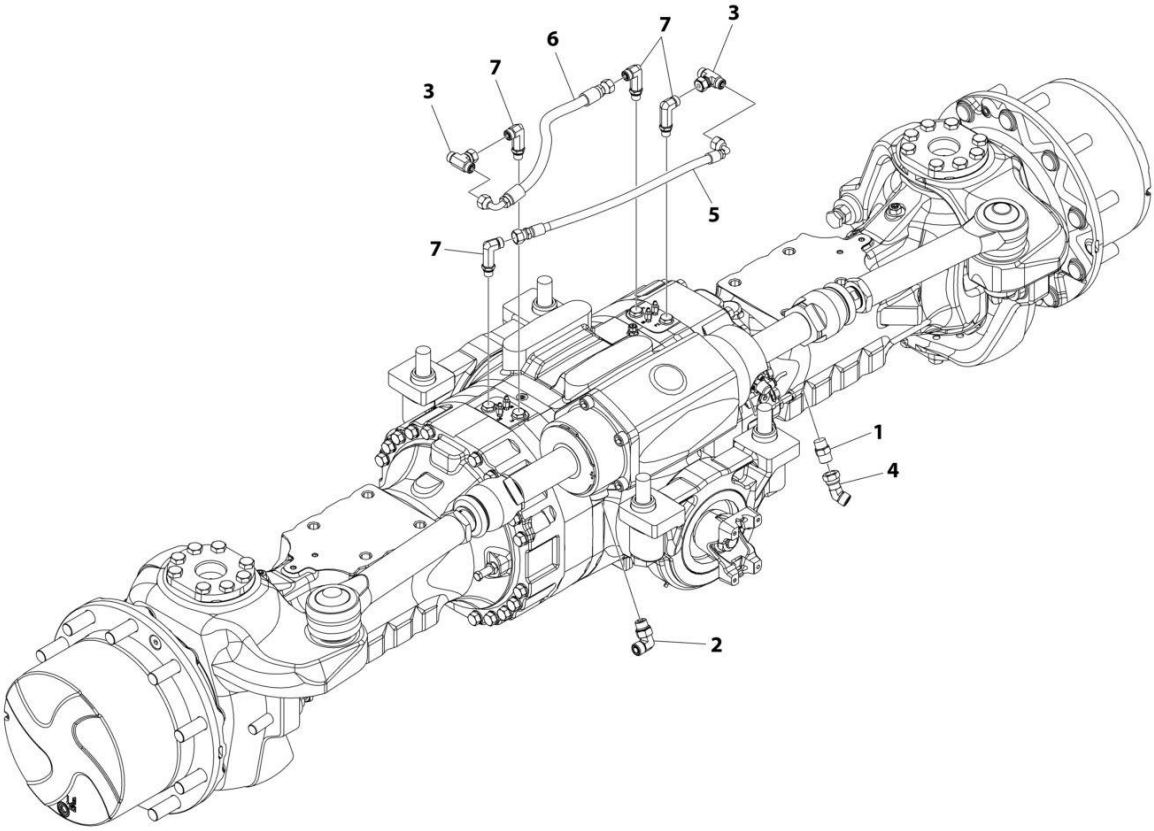

ART_1001256484

FIGURE 5-7. FRONT AXLE LINES INSTALLATION

ITEM	PART NUMBER	QTY	DESCRIPTION	REV
	1001256484	Ref	FRONT AXLE LINES INSTALLATION	A
1	2110808	1	Fitting, Straight ORFS	
2	2130808	1	Fitting, 90 ORFS	
3	2170806	2	Fitting, Tee ORFS	
4	2221231	1	Fitting	
5	1001097810	1	Hose	
6	1001210281	1	Hose	
7	1001210769	4	Fitting, 90 ORFS	

FIGURE 5-8. FRONT AXLE MOUNTING INSTALLATION

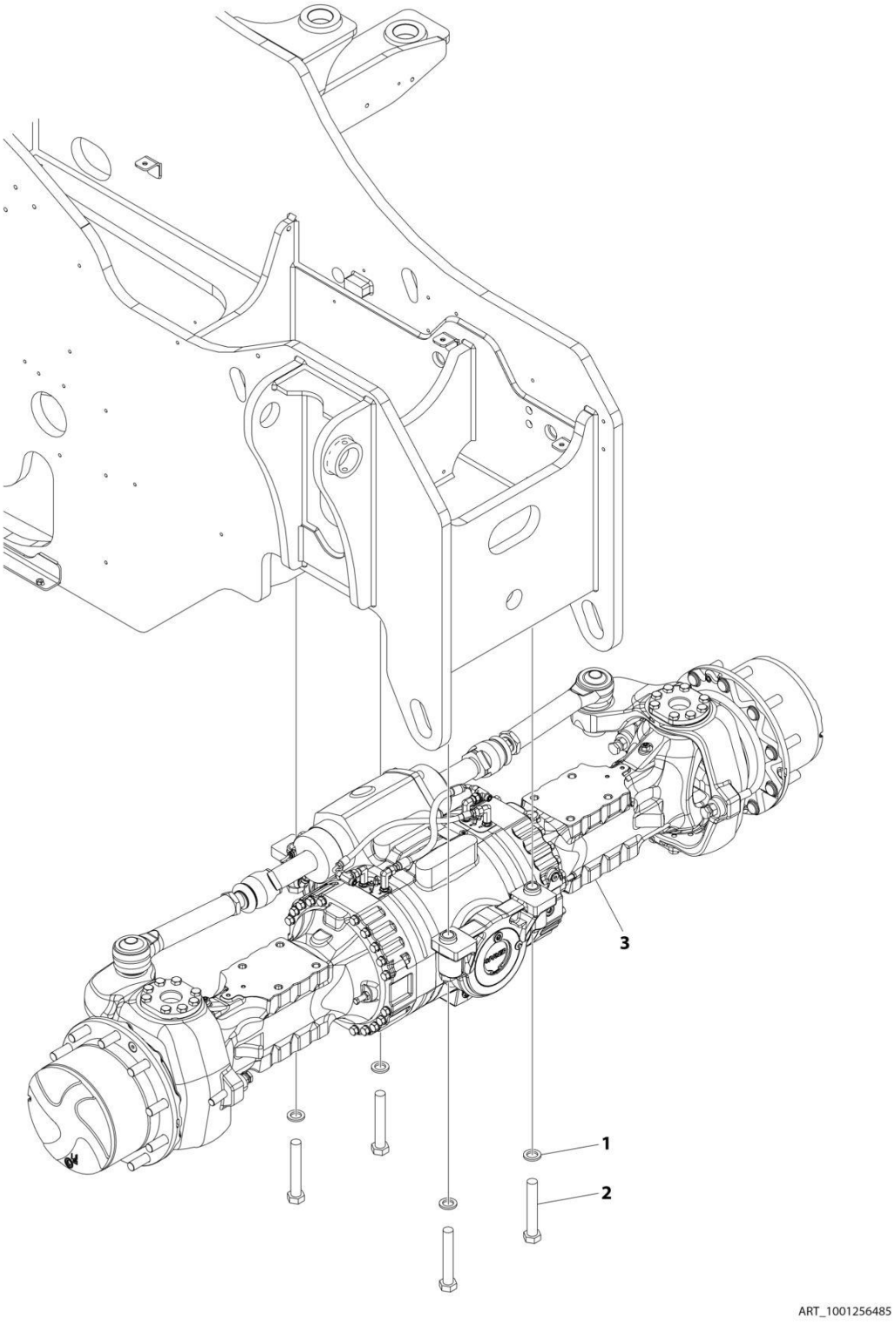

FIGURE 5-8. FRONT AXLE MOUNTING INSTALLATION

ITEM	PART NUMBER	QTY	DESCRIPTION	REV
	1001256485	Ref	FRONT AXLE MOUNTING INSTALLATION	A
1	4892600	4	Washer	
2	1001097587	4	Bolt M24-3 x 150	
3	1012266900	1	Axle Assembly - Front (See Separate Breakdown in this Section)	

FIGURE 5-9. FRONT AXLE

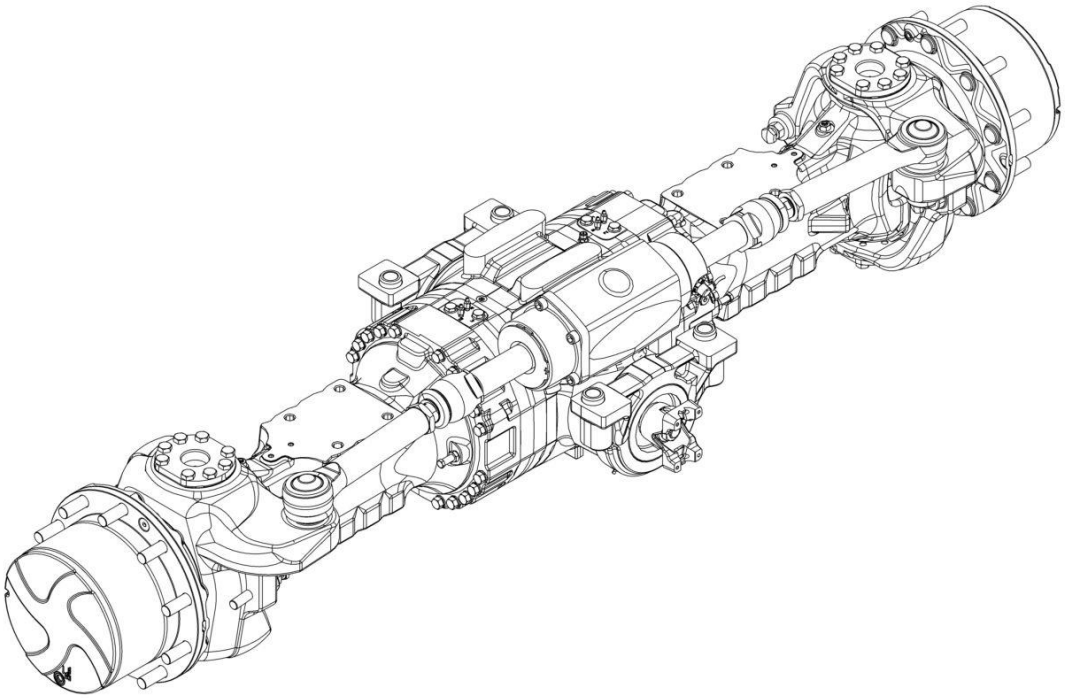

ART_1012266900

FIGURE 5-9. FRONT AXLE

ITEM	PART NUMBER	QTY	DESCRIPTION	REV
	1012266900	Ref	FRONT AXLE	C
		Ref	Note: No Service Parts Available at Time of Printing.	

FIGURE 5-10. REAR AXLE LINES INSTALLATION

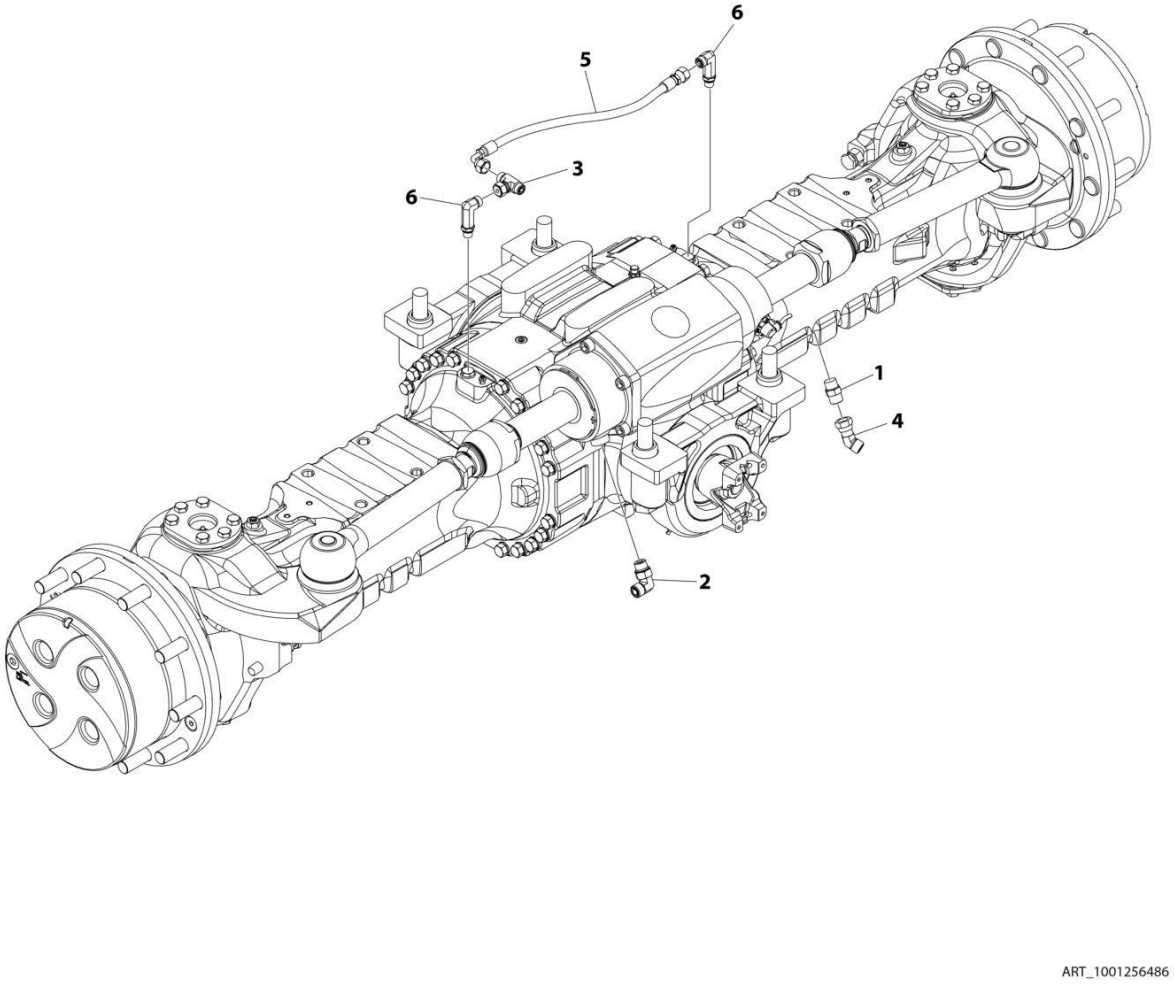

FIGURE 5-10. REAR AXLE LINES INSTALLATION

ITEM	PART NUMBER	QTY	DESCRIPTION	REV
	1001256486	Ref	REAR AXLE LINES INSTALLATION	A
1	2110808	1	Fitting, Straight ORFS	
2	2130808	1	Fitting, 90 ORFS	
3	2170806	1	Fitting, Tee ORFS	
4	2221231	1	Fitting, 45 ORFS	
5	1001097810	1	Hose	
6	1001210769	2	Fitting, 90 ORFS	

FIGURE 5-11. REAR AXLE MOUNTING INSTALLATION

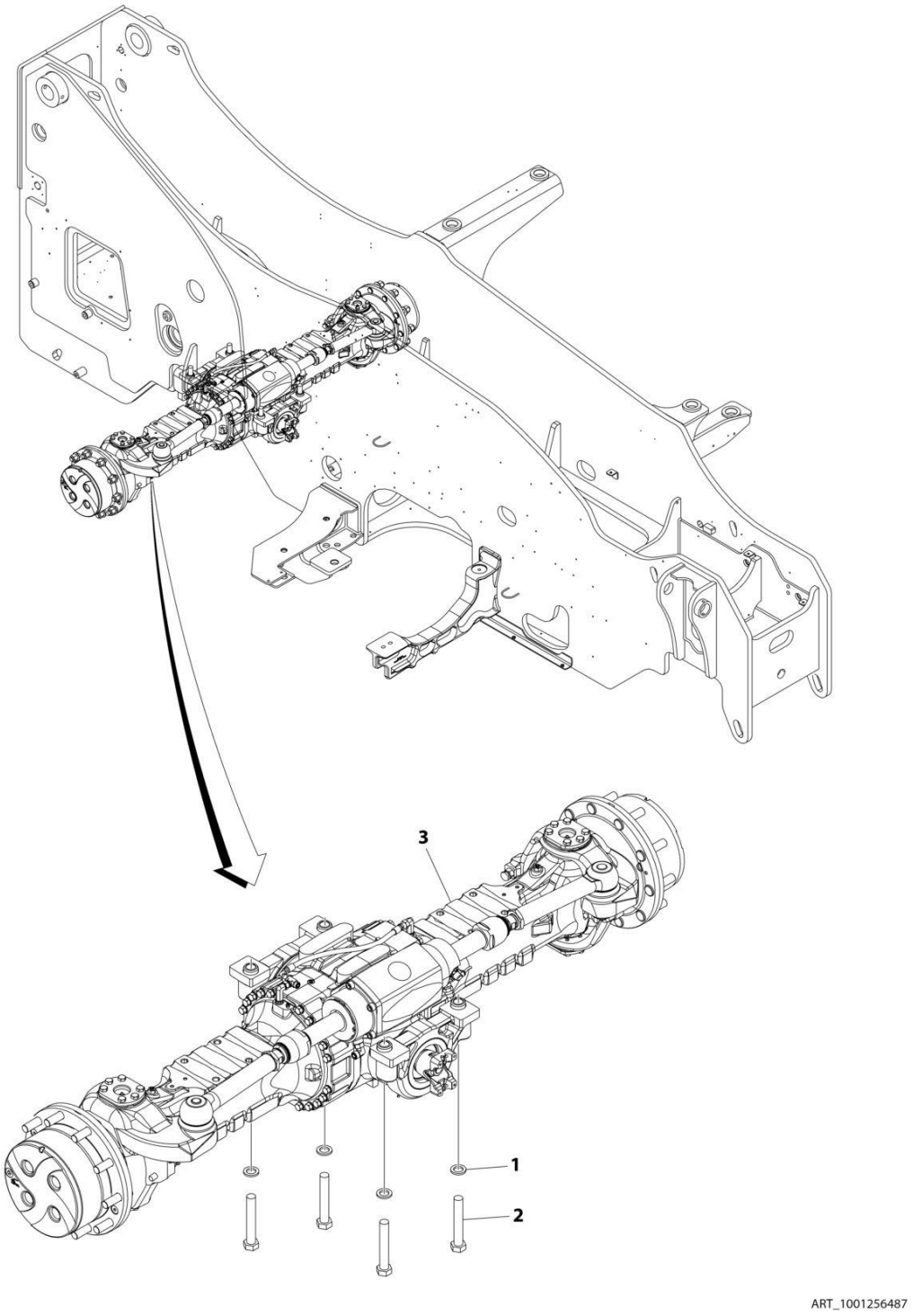

FIGURE 5-11. REAR AXLE MOUNTING INSTALLATION

ITEM	PART NUMBER	QTY	DESCRIPTION	REV
	1001256487	Ref	REAR AXLE MOUNTING INSTALLATION	A
1	4892600	4	Washer	
2	1001097587	4	Bolt M24-3 x 150	
3	1012667300	1	Axle Assembly - Rear (See Separate Breakdown in this Section)	

FIGURE 5-12. REAR AXLE

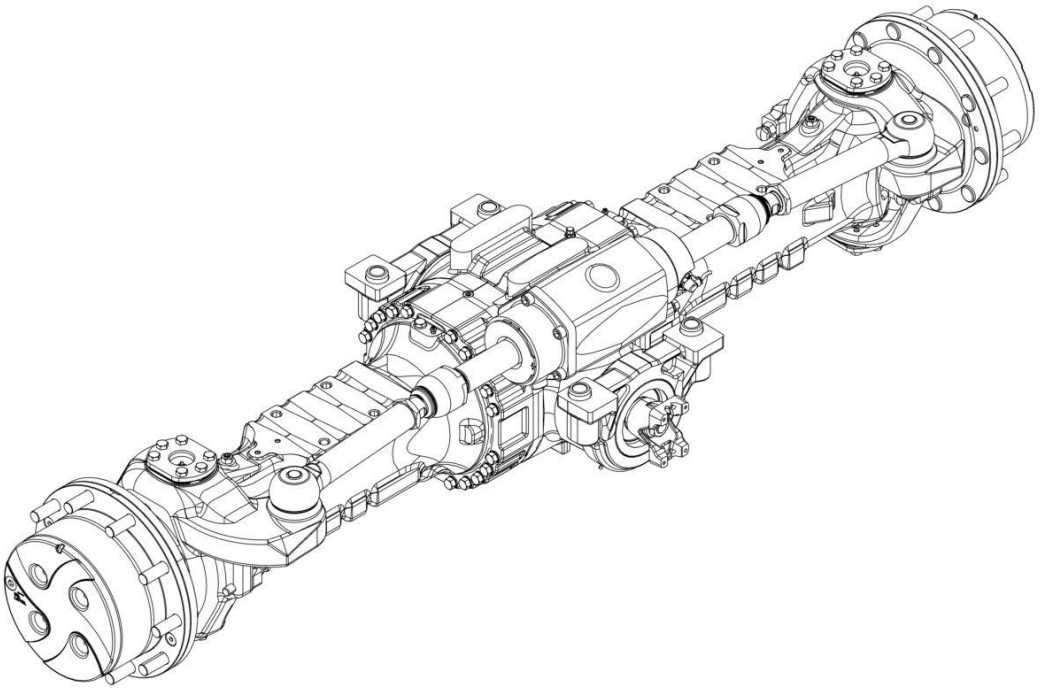

ART_1012667300

FIGURE 5-12. REAR AXLE

ITEM	PART NUMBER	QTY	DESCRIPTION	REV
	1012667300	Ref	REAR AXLE	B
		Ref	Note: No Service Parts Available at Time of Printing.	

FIGURE 5-13. TIRE/WHEEL SET (AIR 17.5-25 - 20 PLY), CAMSO L2

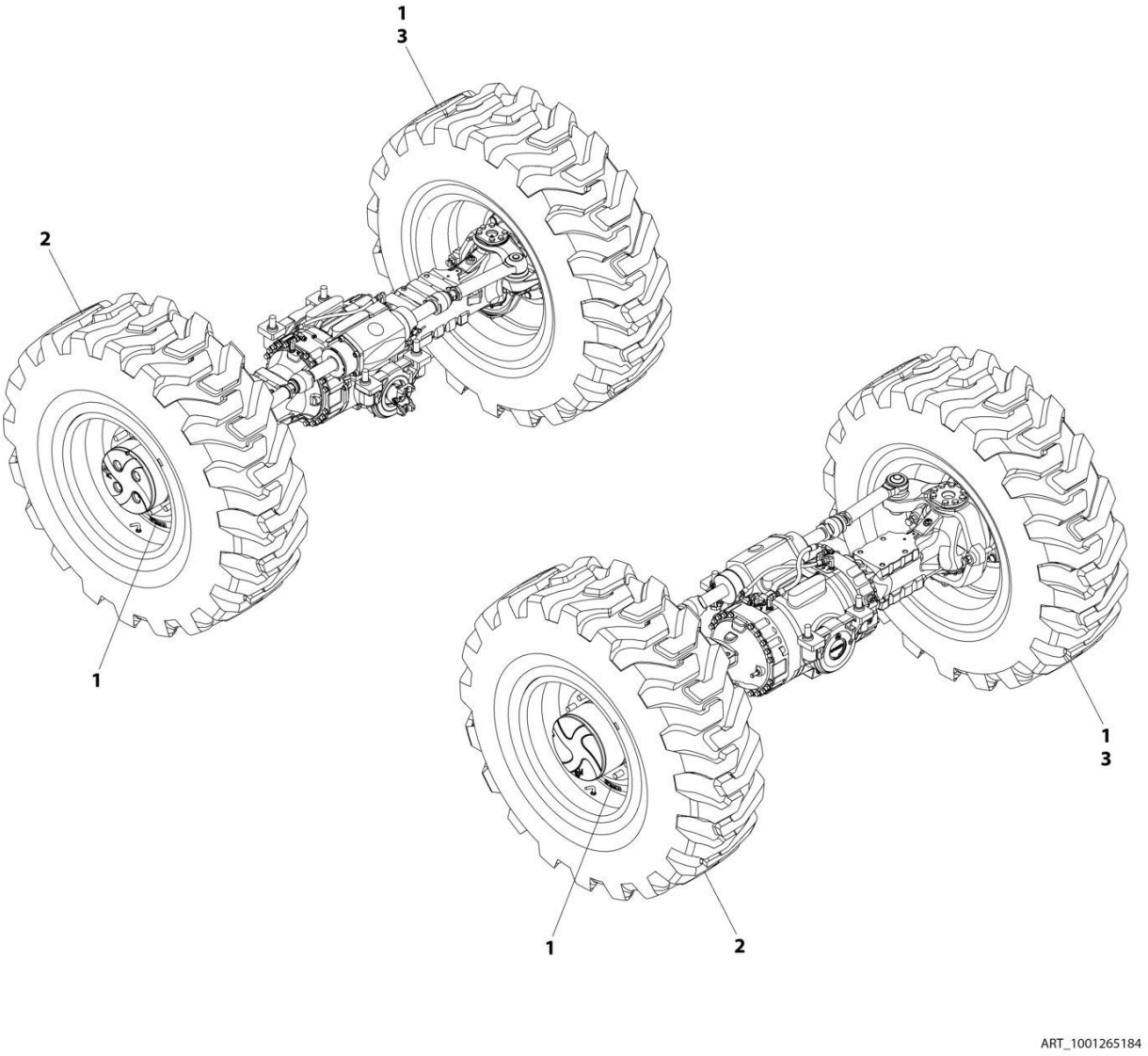

FIGURE 5-13. TIRE/WHEEL SET (AIR 17.5-25 - 20 PLY), CAMSO L2

ITEM	PART NUMBER	QTY	DESCRIPTION	REV
	1001265184	Ref	TIRE/WHEEL SET (FOAM 17.5-25) (CAMSO L2)	A
1	1001257082	4	Decal - Tire Pressure	
2	1001265076	2	Tire Assembly, RH (Foam 17.5 - 25) (Camso L2)	A
2	8786549	1	Valve, Stem	
2	1001189288J	1	Wheel, 25 x 14.0 DTU 10 Hole	
2	1001264617	1	Tire, 17.5 - 25 Camso L2 24 Ply	
3	1001265077	2	Tire Assembly, LH (Foam 17.5 - 25) (Camso L2)	A
3	8786549	1	Valve, Stem	
3	1001189288J	1	Wheel, 25 x 14.0 DTU 10 Hole	
3	1001264617	1	Tire, 17.5 - 25 Camso L2 24 Ply	

FIGURE 5-14. TIRE/WHEEL SET (AIR 17.5-25 - 20 PLY), CAMSO L3

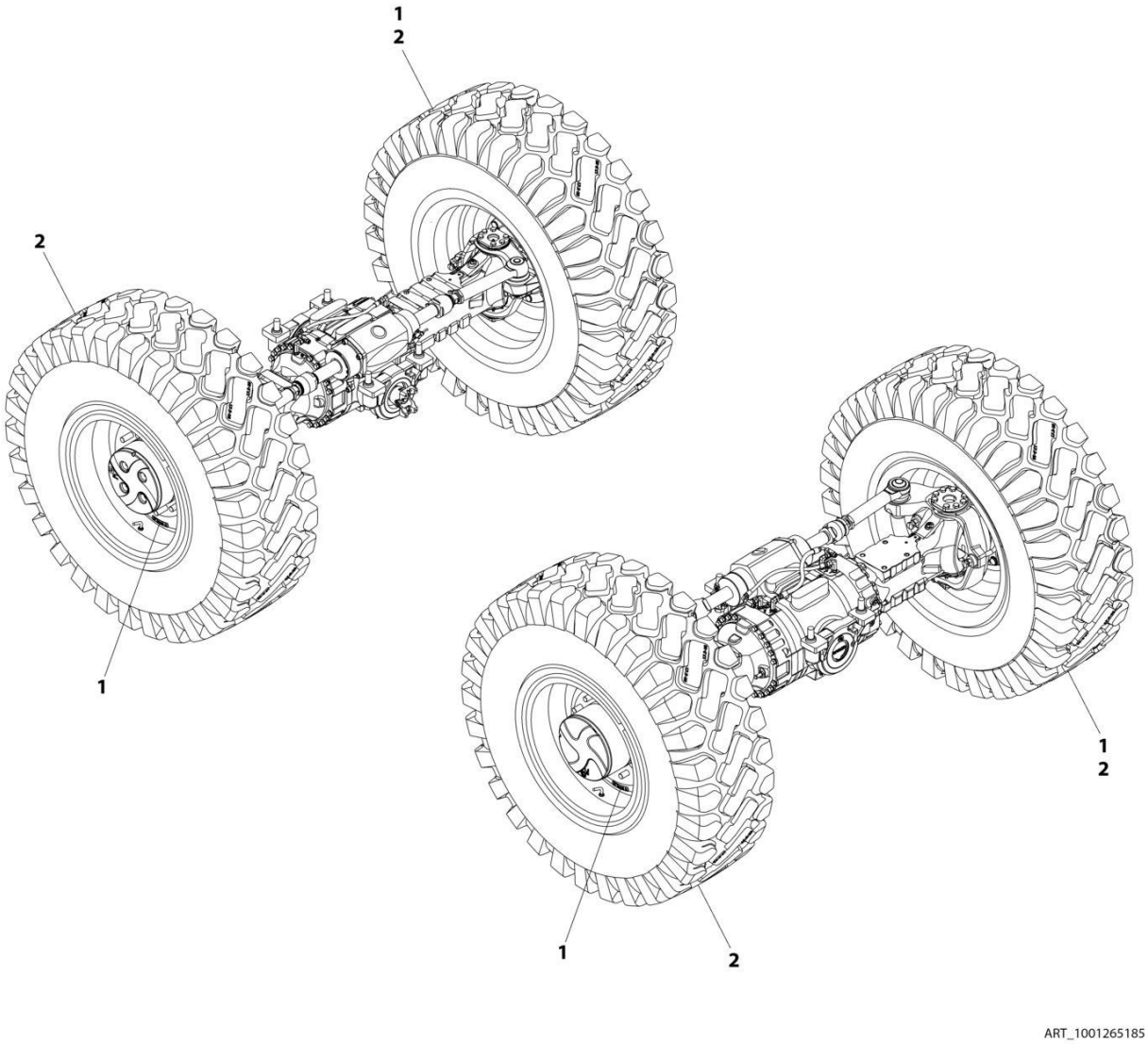

FIGURE 5-14. TIRE/WHEEL SET (AIR 17.5-25 - 20 PLY), CAMSO L3

ITEM	PART NUMBER	QTY	DESCRIPTION	REV
	1001265185	Ref	TIRE/WHEEL SET (AIR 17.5-25) (CAMSO L3)	A
1	1001257082	4	Decal - Tire Pressure	
2	1001265078	4	Tire Assembly (Air 17.5 - 25) (Camso L3)	B
2	8786549	1	Valve, Stem	
2	1001189288J	1	Wheel, 25 x 14.0 DTU 10 Hole	
2	1001264618	1	Tire, Air 17.5 - 25 (Camso L3)	

FIGURE 5-15. TIRE/WHEEL SET (FOAM 17.5-25 - 20 PLY), CAMSO L2

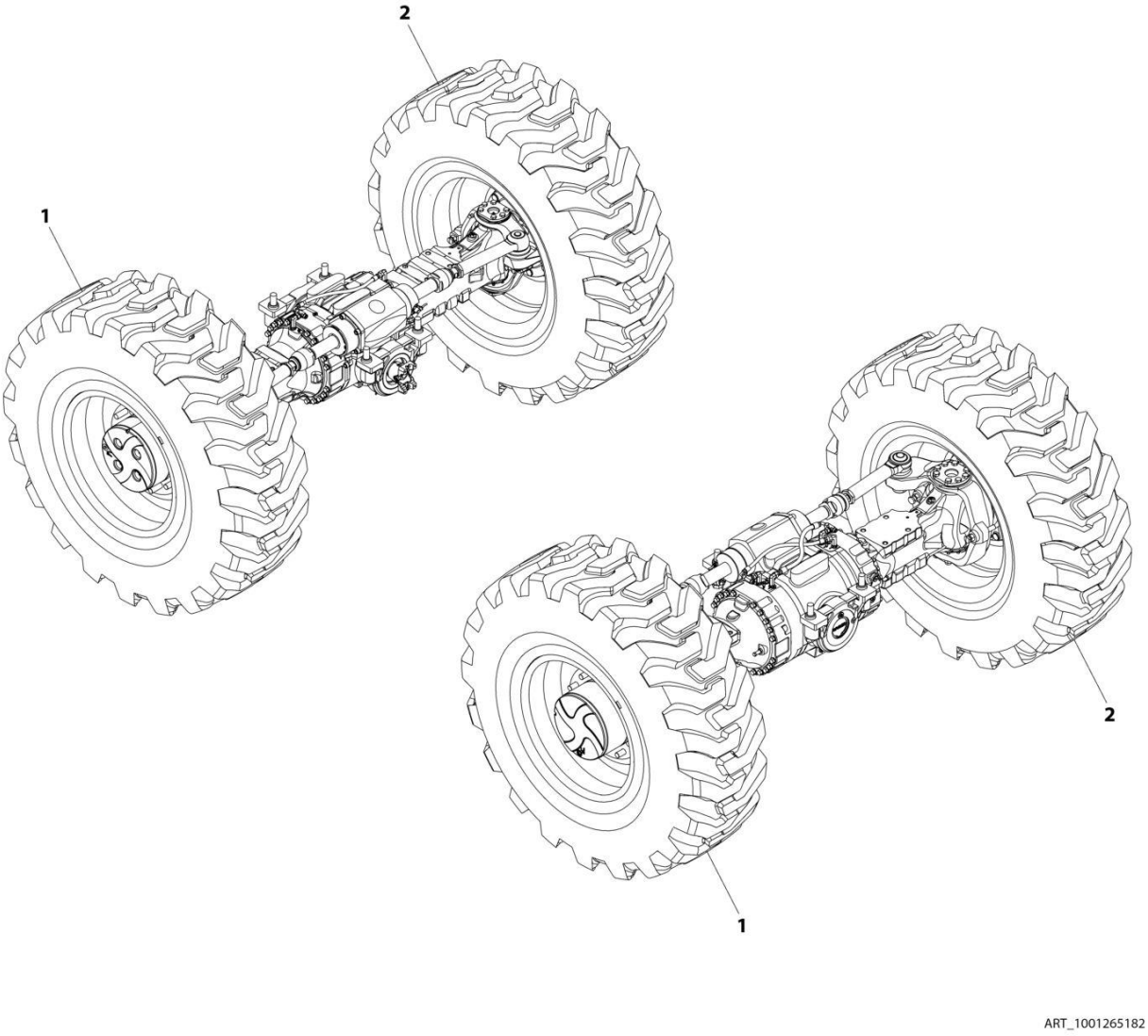

FIGURE 5-15. TIRE/WHEEL SET (FOAM 17.5-25 - 20 PLY), CAMSO L2

ITEM	PART NUMBER	QTY	DESCRIPTION	REV
	1001265182	Ref	TIRE/WHEEL SET (FOAM 17.5-25) (CAMSO L2)	A
		Ref	Note: Requires ballast/foam filling to manufacturer's specifications prior to installing on a machine. Refer to Service and Maintenance Manuals. Purchase individual tire and/or rim only if able to foam fill tire and wheel assembly, otherwise, purchase complete.	
1	1001265073	2	Tire Assembly RH (Foam 17.5 - 25) (Camso L2)	A
1	8786549	1	Valve, Stem	
1	1001189288J	1	Wheel, 25 x 14.0 DTU 10 Hole	
1	1001264617	1	Tire (Foam 17.5 - 25) (Camso L2)	
2	1001265074	2	Tire Assembly LH (Foam 17.5 - 25) (Camso L2)	A
2	8786549	1	Valve, Stem	
2	1001189288J	1	Wheel, 25 x 14.0 DTU 10 Hole	
2	1001264617	1	Tire (Foam 17.5 - 25) (Camso L2)	

FIGURE 5-16. TIRE/WHEEL SET (FOAM 17.5-25 - 20 PLY), CAMSO L3

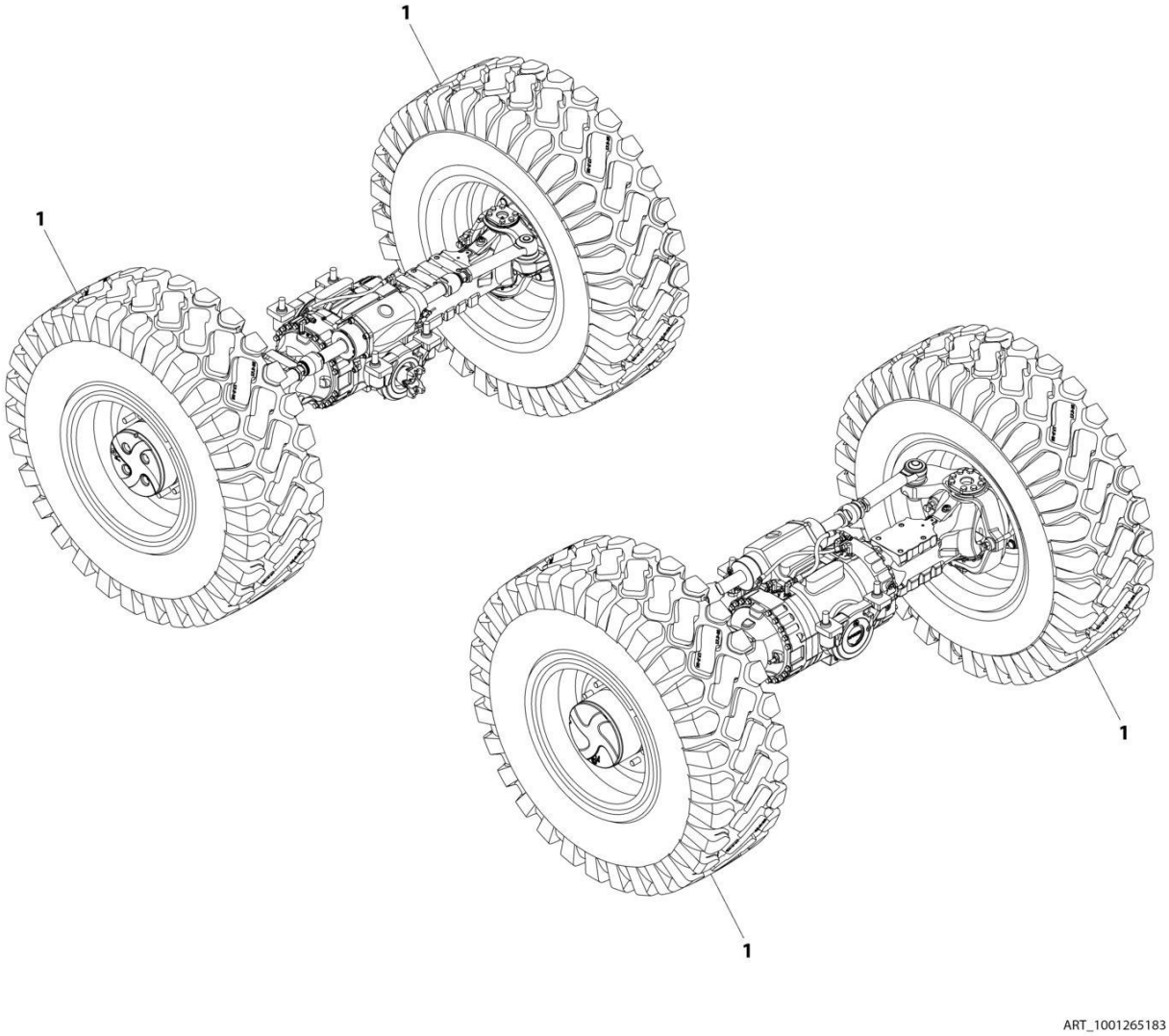

FIGURE 5-16. TIRE/WHEEL SET (FOAM 17.5-25 - 20 PLY), CAMSO L3

ITEM	PART NUMBER	QTY	DESCRIPTION	REV
	1001265183	Ref	TIRE/WHEEL SET (FOAM 17.5-25) (CAMSO L3)	A
		Ref	Note: Requires ballast/foam filling to manufacturer's specifications prior to installing on a machine. Refer to Service and Maintenance Manuals. Purchase individual tire and/or rim only if able to foam fill tire and wheel assembly, otherwise, purchase complete.	
1	1001265075	4	Tire/Wheel Assembly (Foam 17.5 - 25) (Camso L3)	B
1	8786549	1	Valve, Stem	
1	1001189288J	1	Wheel, 25 x 14.0 DTU 10 Hole	
1	1001264618	1	Tire (Foam 17.5 - 25) (Camso L3)	

FIGURE 5-17. CAB FENDER INSTALLATION

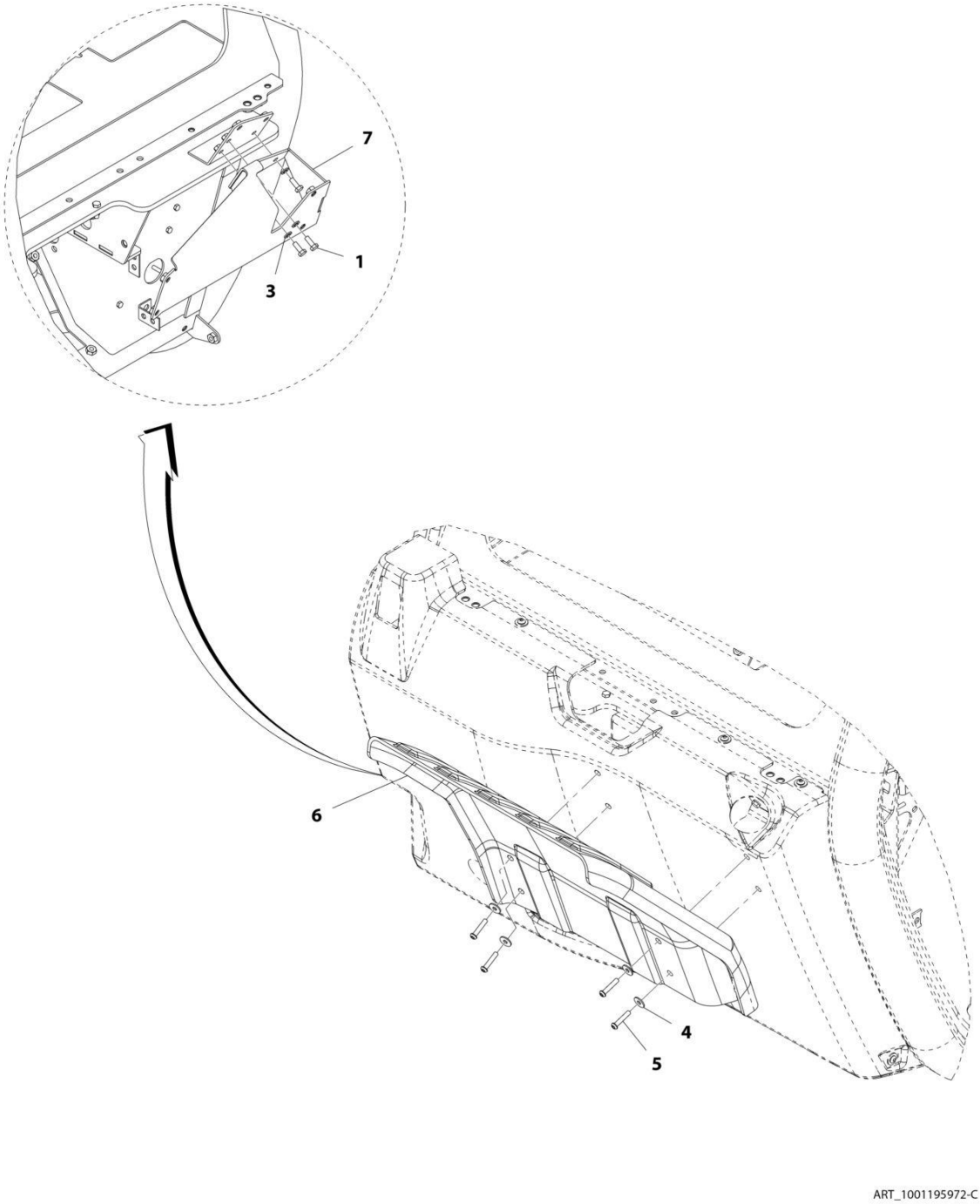

FIGURE 5-17. CAB FENDER INSTALLATION

ITEM	PART NUMBER	QTY	DESCRIPTION	REV
	1001195972	Ref	Cab Fender Installation	C
1	0760608	3	Bolt, M6X16	
3	4811700	3	Washer, M6	
4	4811702	4	Washer, M6	
5	1001097202	4	Screw, M6X30	
6	1001187335	1	Fender, Front	
7	1001188048	1	Plate	

FIGURE 5-18. FENDER INSTALLATION

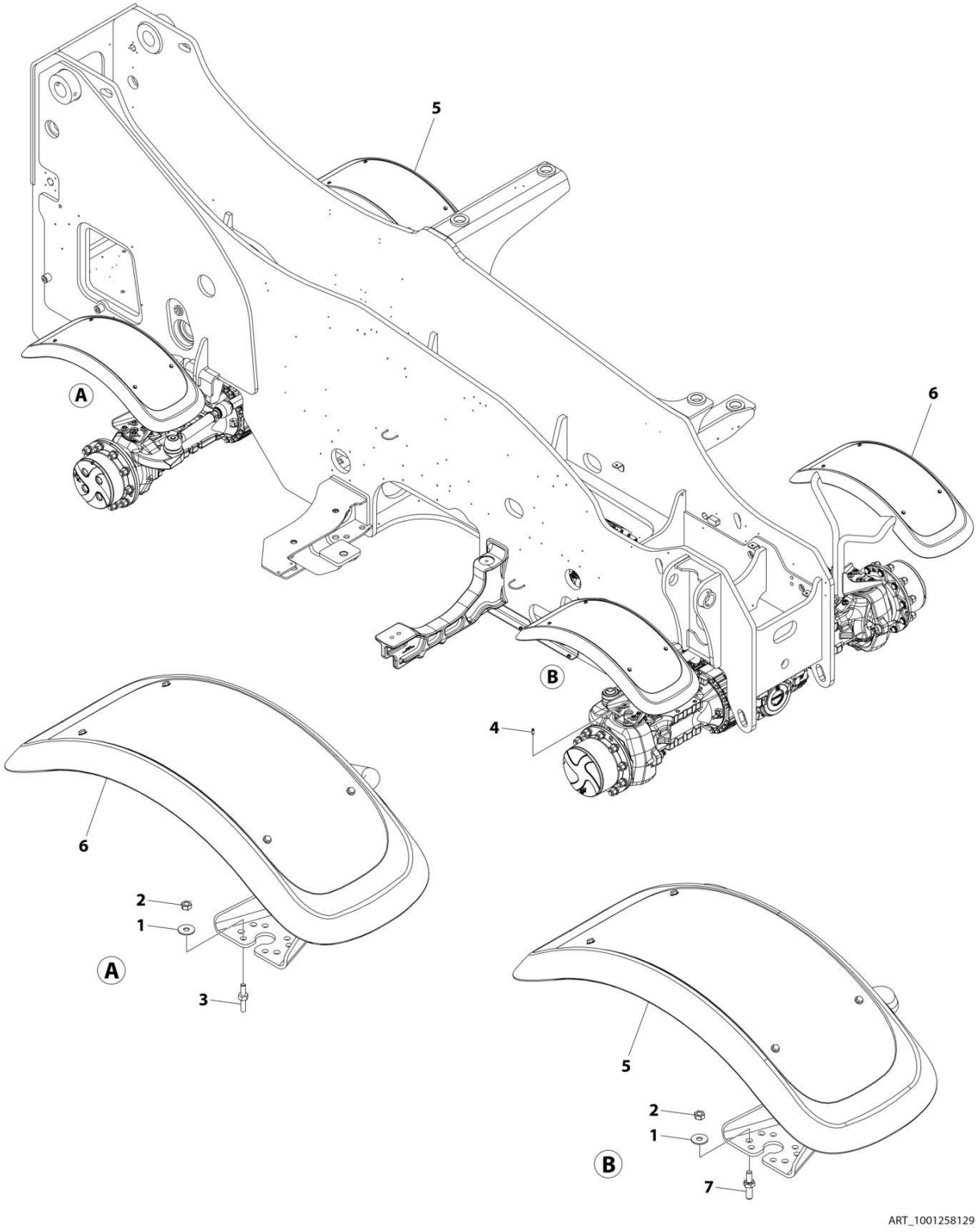

FIGURE 5-18. FENDER INSTALLATION

ITEM	PART NUMBER	QTY	DESCRIPTION	REV
	1001258129	Ref	FENDER INSTALLATION	A
1	4812102	16	Washer M12	
2	91513266	16	Nut M12	
3	91514118	8	Stud, Fender	
4	1001225317	4	Fitting, Grease	
5	1001258117	2	Assembly, RH Fender (See Separate Breakdown in this Section)	
6	1001258118	2	Assembly, LH Fender (See Separate Breakdown in this Section)	
7	1001269183	8	Stud, Fender	

FIGURE 5-19. RH FENDER ASSEMBLY

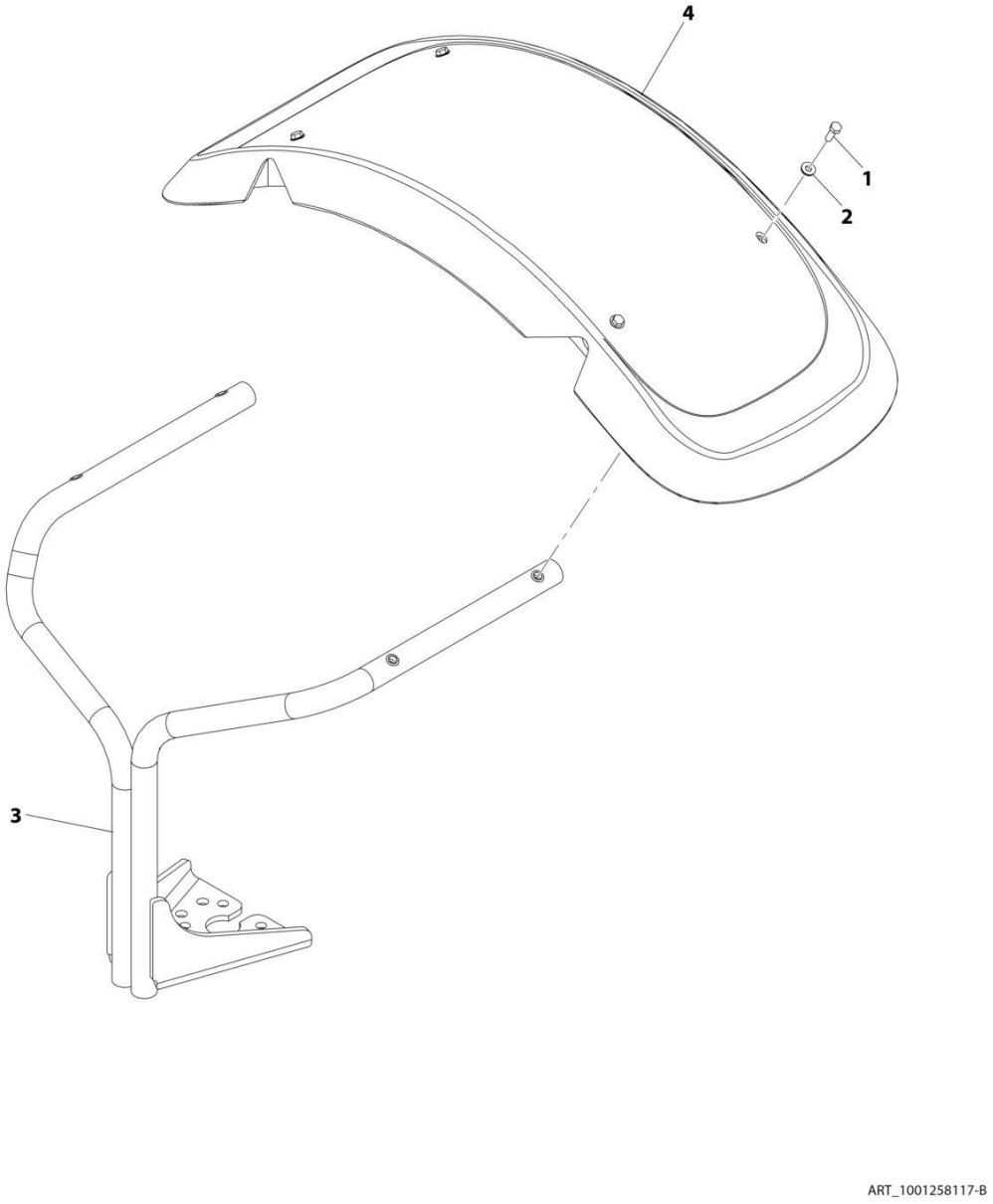

FIGURE 5-19. RH FENDER ASSEMBLY

ITEM	PART NUMBER	QTY	DESCRIPTION	REV
	1001258117	Ref	RH Fender Assembly	B
1	0760812	4	Bolt, M8X25	
2	1001202786	4	Washer	
3	1001258121	1	Bracket, Fender RH Assembly	
4	1001168264	1	Fender	

FIGURE 5-20. LH FENDER ASSEMBLY

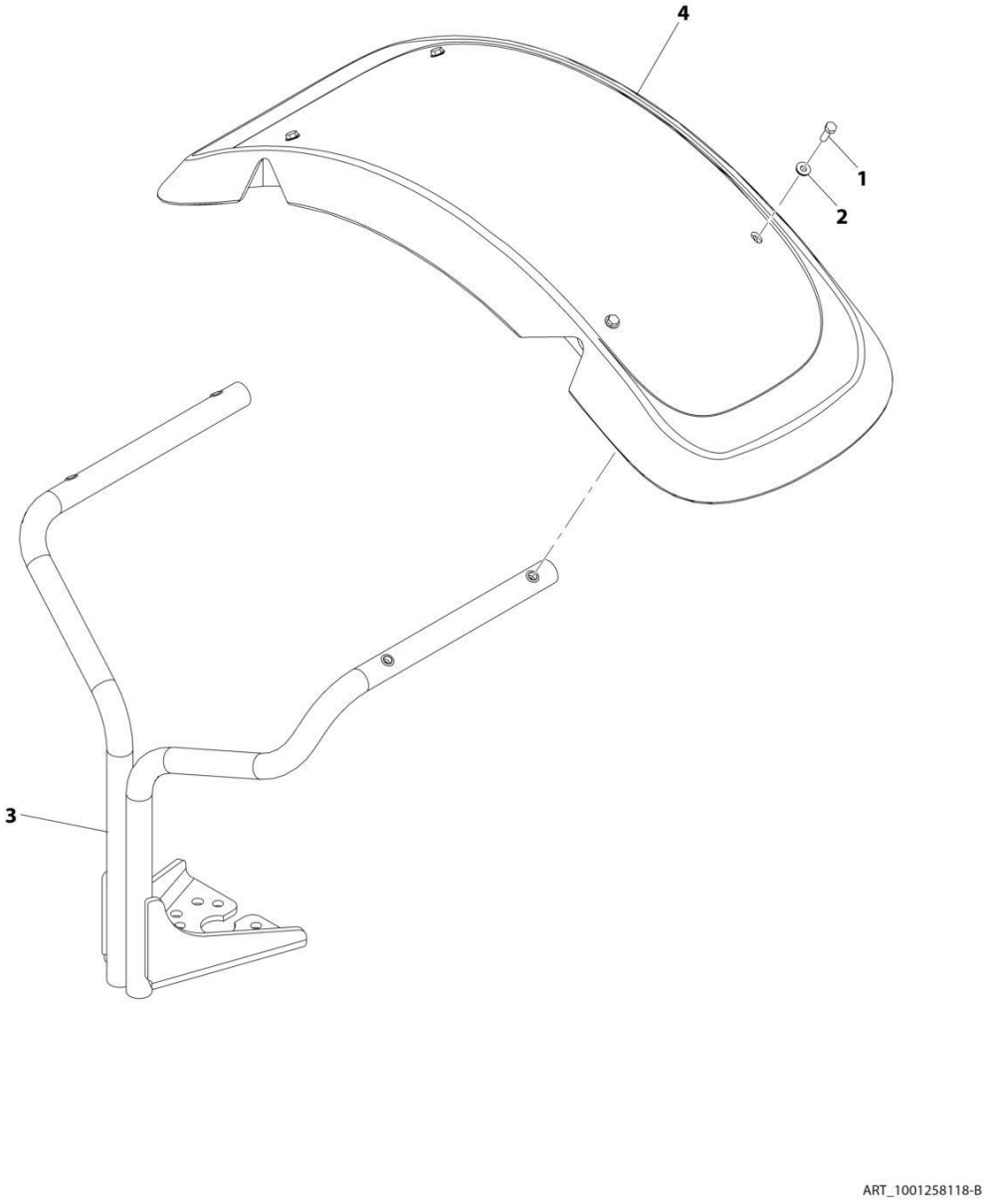

FIGURE 5-20. LH FENDER ASSEMBLY

ITEM	PART NUMBER	QTY	DESCRIPTION	REV
	1001258118	Ref	LH Fender Assembly	B
1	0760812	4	Screw, M8X25	
2	1001202786	4	Washer	
3	1001258122	1	LH Bracket	
4	1001168264	1	Fender	

SECTION 6 - CAB

FIGURE 6-1. CAB MOUNTING

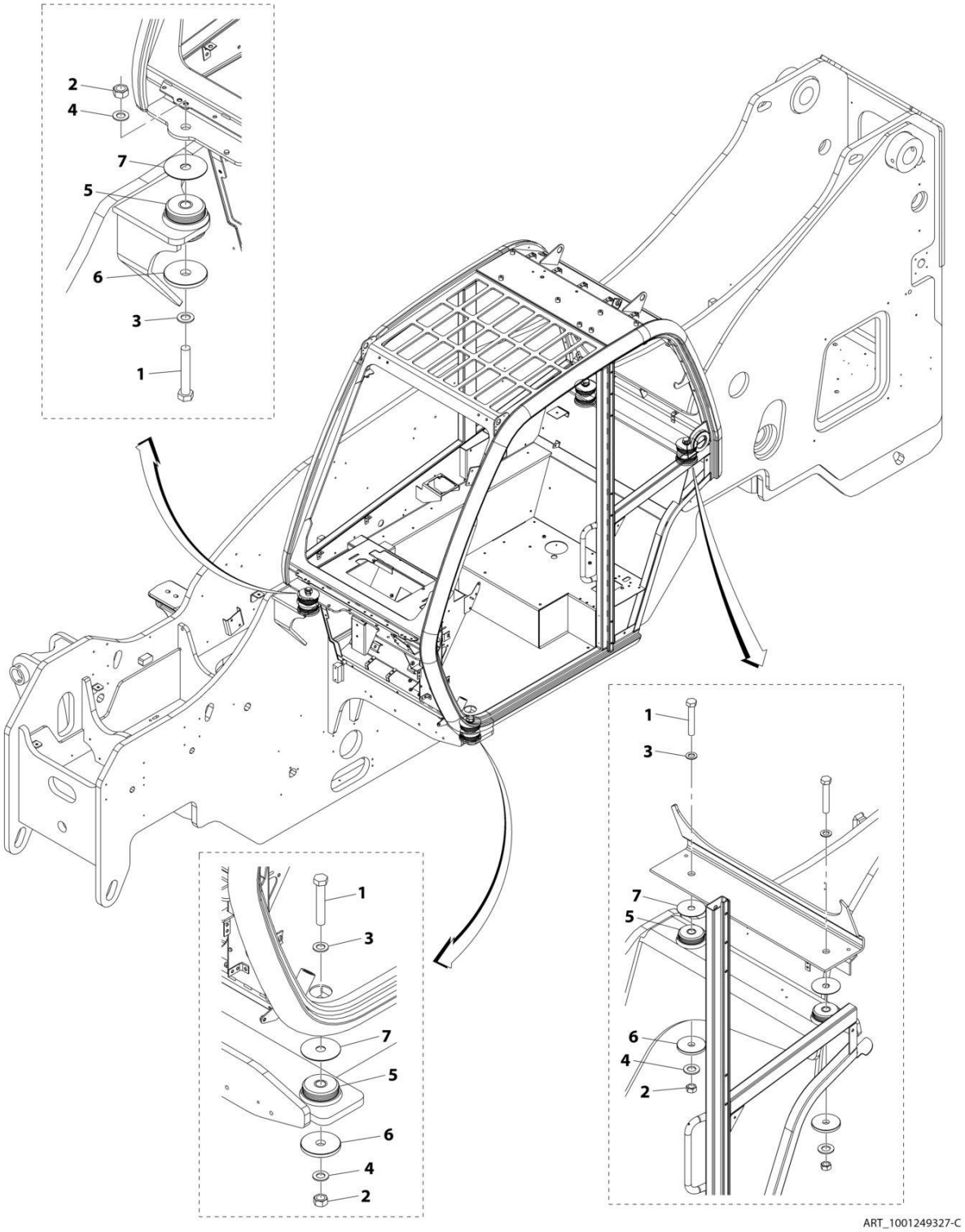

FIGURE 6-1. CAB MOUNTING

ITEM	PART NUMBER	QTY	DESCRIPTION	REV
	1001249327	Ref	CAB MOUNTING	C
1	0712029	4	Bolt M20 X 120 Class 10.9	
2	3332011	4	Nut M20	
3	4812500	4	Washer M20	
4	5242000	4	Washer M20	
5	1001205066	4	Mount, Cab Isolation	
6	1001207854	4	Washer, Cab Rebound	
7	1001253797	4	Washer, Cab Mount	

FIGURE 6-2. CAB INSTALLATION

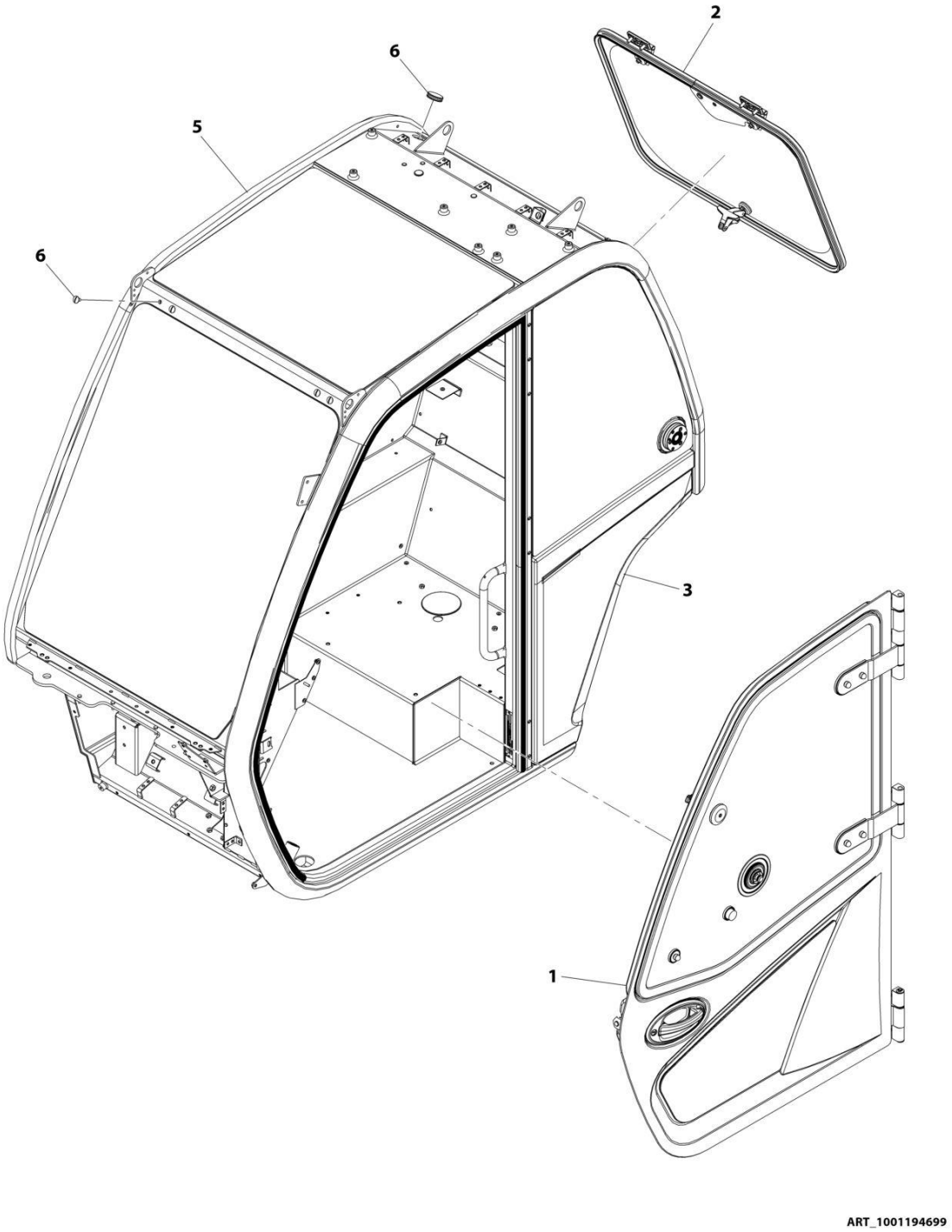

FIGURE 6-2. CAB INSTALLATION

ITEM	PART NUMBER	QTY	DESCRIPTION	REV
	1001194699	Ref	Cab Installation	L
1	1001155228	1	Installation, Cab Door (See Separate Breakdown in this Section)	
2	1001220339	1	Installation, Rear Window (See Separate Breakdown in this Section)	
3	1001194700	1	Assembly, Cab Group (See Separate Breakdown in this Section)	
5	N.S.S.	1	Weldment, Cab	
6	1001195814	1	Group, Cab Plug (See Separate Breakdown in this Section)	

FIGURE 6-3. CAB ASSEMBLY

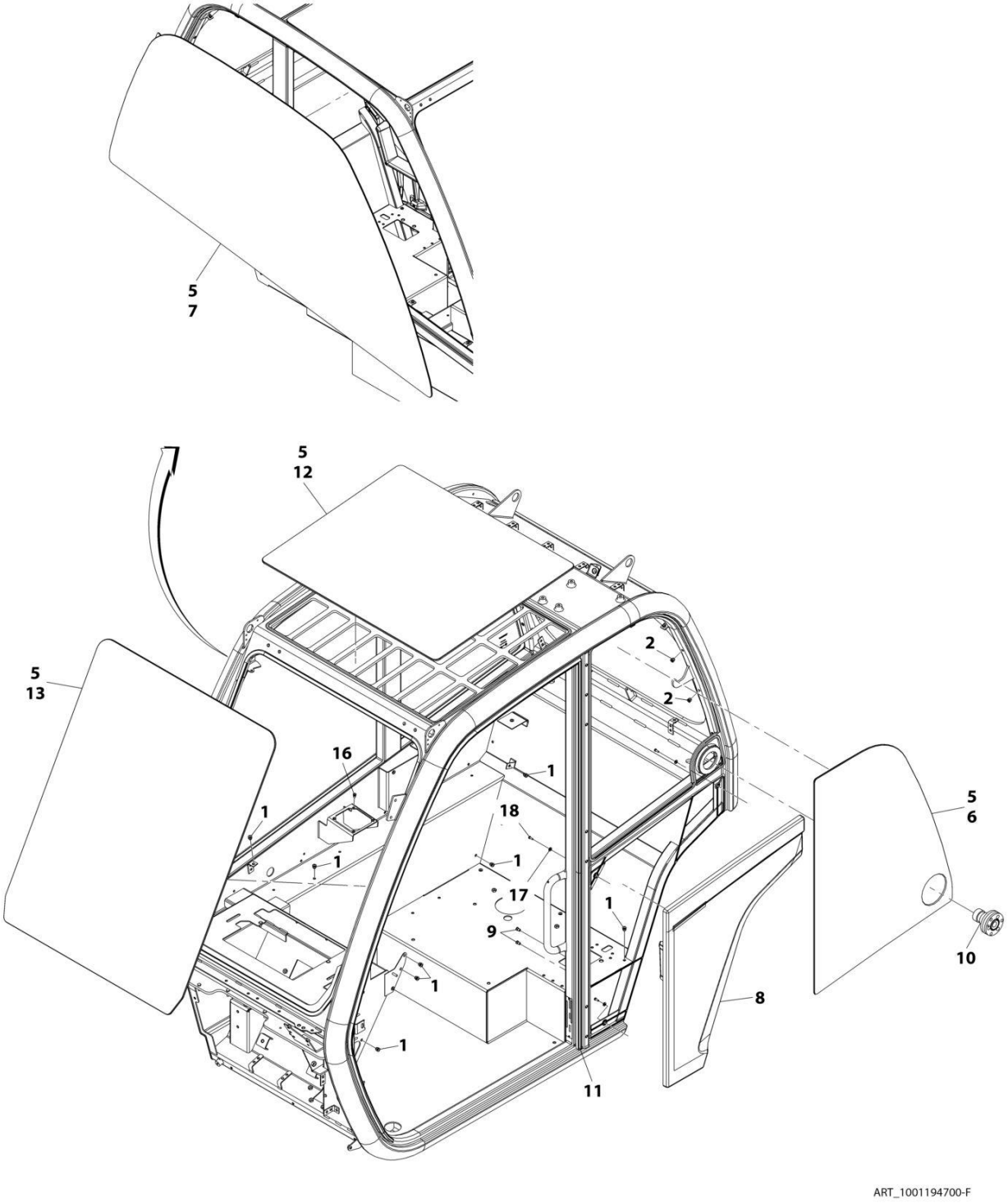

FIGURE 6-3. CAB ASSEMBLY

ITEM	PART NUMBER	QTY	DESCRIPTION	REV
	1001194700	Ref	Cab Assembly	G
1	2080086	25	Rivnut M6 x 1	
2	2080087	16	Rivnut M8 x 1.25	
5	1001111317	AR	Compound, Locking	
6	1001152915	1	Glass, LH Screen	
7	1001152947	1	Glass, RH Screen	
8	1001256073	1	Panel, Cab Quarter	
9	1001172193	2	Rivnut M5 x 0.8	
10	1001174320	1	Latch, Top Window	
11	1001227186	1	Seal, Cab Door	
12	1001178159	1	Glass, Roof Laminated	
13	1001178160	1	Glass, Front Laminated	
16	1001195878	4	Rivnut M5 x 0.8	
17	4811700	3	Washer M6	
18	4010608002	3	Screw	

FIGURE 6-4. DOOR INSTALLATION

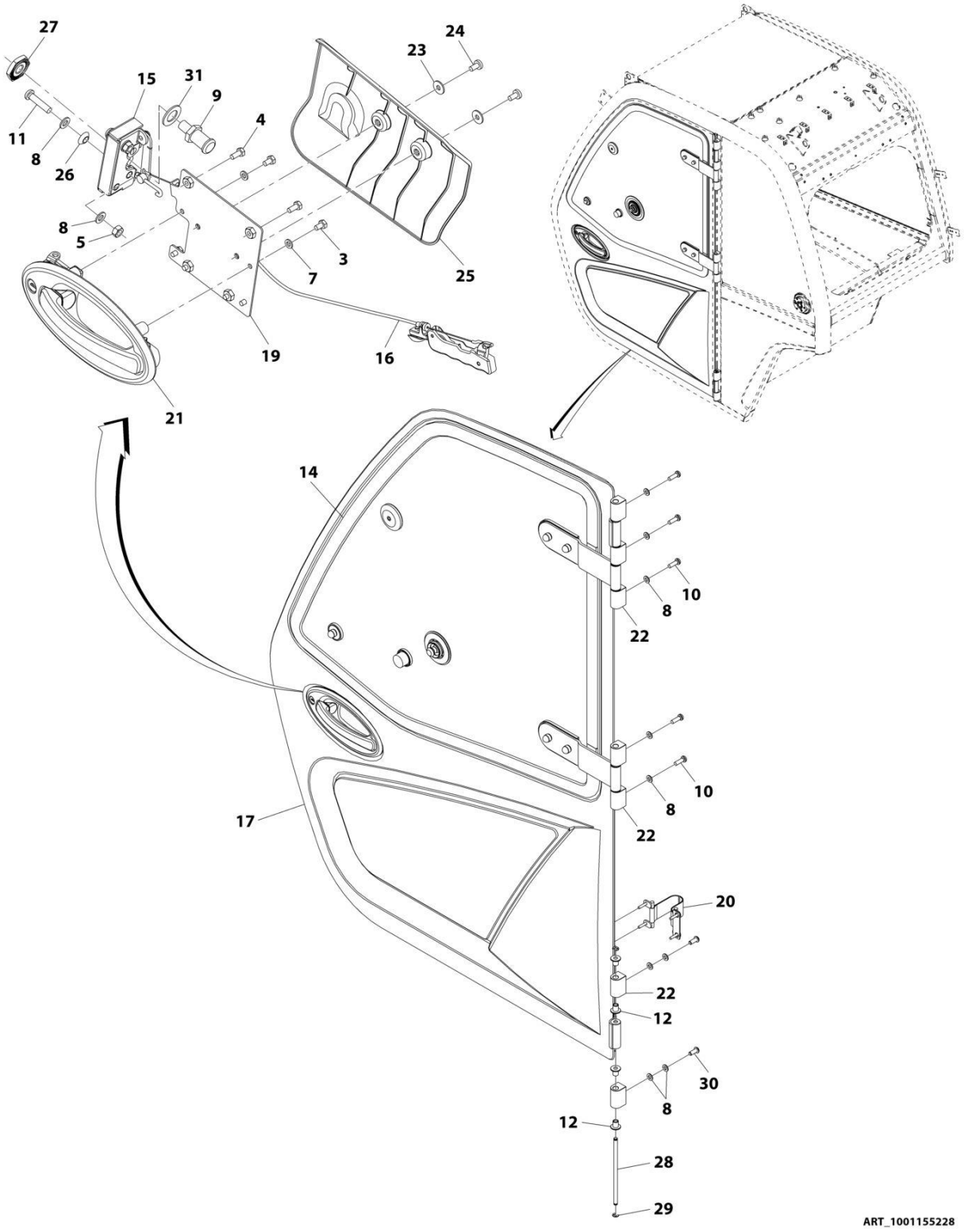

FIGURE 6-4. DOOR INSTALLATION

ITEM	PART NUMBER	QTY	DESCRIPTION	REV
	1001155228	Ref	Door Installation	Q
3	0760605	4	Bolt, M6X10	
4	0760607	4	Bolt, M6X14	
5	3290801	2	Nut, M8X1.25 Grade 8	
7	4811700	4	Washer, M6	
8	4811900	13	Washer, M8	
9	8000803	1	Pin, Door Striker	
10	1001008988	5	Screw M8X25	
11	1001047062	2	Screw, M8X35	
12	1001107192	10	Sleeve, Hinge	
14	1001205532	1	Assembly, Door Upper Glass (See Separate Breakdown in this Section)	
15	1001192766	1	Assembly, Cab Latch (See Separate Breakdown in this Section)	
16	1001167958	1	Assembly, Cab Door Trigger (See Separate Breakdown in this Section)	
17	1001170114	1	Assembly, Door (See Separate Breakdown in this Section)	
19	1001173298	1	Bracket	
20	1001174295	1	Installation, Door Strap (See Separate Breakdown in this Section)	
21	1001192646	1	Handle, Exterior Door	
22	1001229543	7	Block, Hinge (Rounded Top/Bottom Edge)	
22	1001170601J	7	Block, Hinge (Square Top/Bottom Edge)	
23	4811702001	2	Washer, M6	
24	4010608002	2	Screw, Posi-Drive, M6X16	
25	1001175477	1	Cover, Cab Door Interior	
26	1001184439	2	Bushing	
27	1001192309	1	Nut, M12X1	
28	1001213791	1	Pin	
29	0498748	2	Washer, Lock M7	
30	1001164726	2	Bolt, M8X20	
31	1001227802	1	Washer	

FIGURE 6-5. DOOR ASSEMBLY (AG)

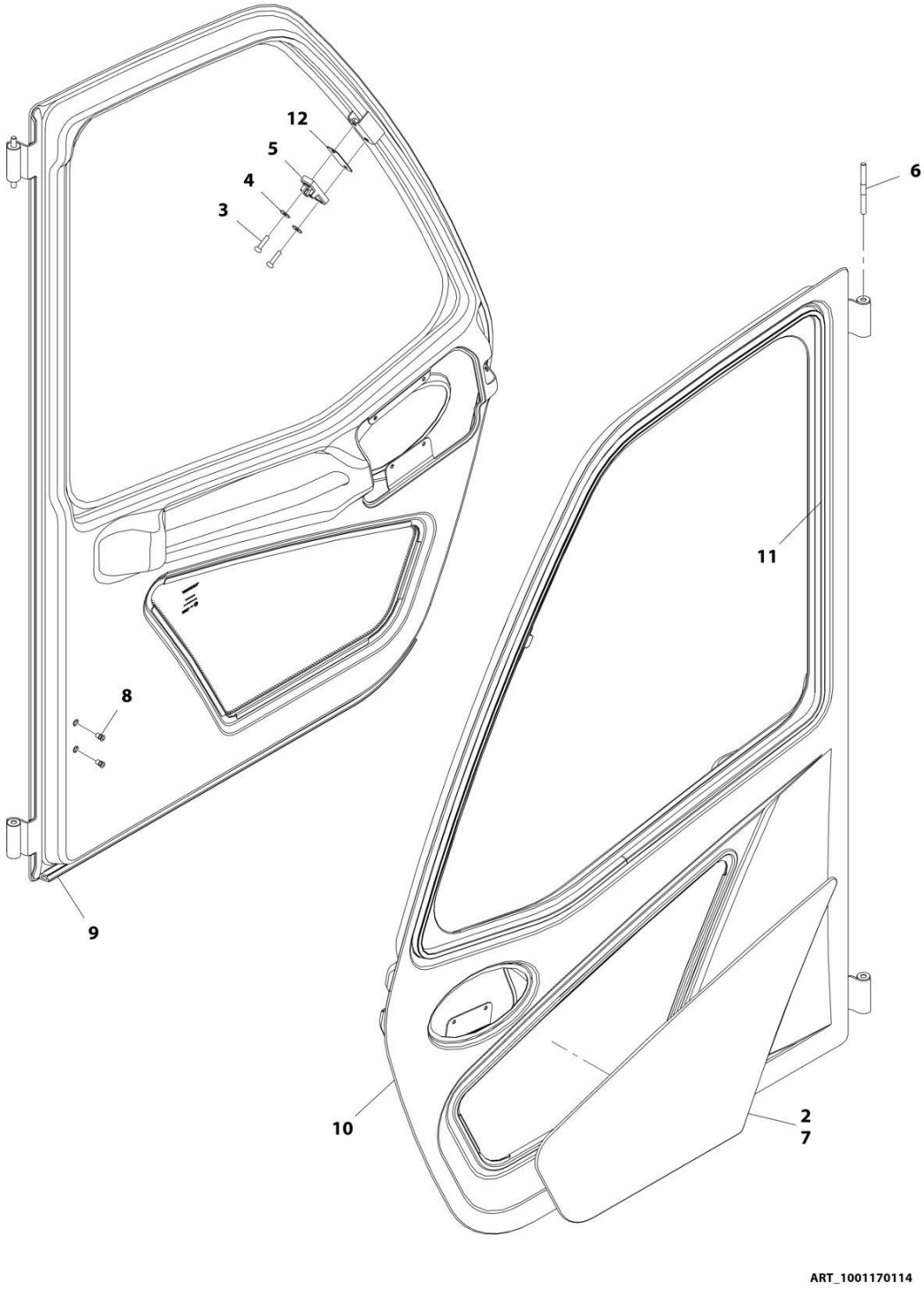

FIGURE 6-5. DOOR ASSEMBLY (AG)

ITEM	PART NUMBER	QTY	DESCRIPTION	REV
	1001170114	Ref	Door Assembly	K
2	1001111317	AR	Compound, Locking	
3	4010612002	2	Screw, M6X25	
4	4811702001	2	Washer, M6	
5	1001165276	1	Plate, Window Latch Striker	
6	1001166634	1	Pin, Hinge	
7	1001169880	1	Window, Lower Glass	
8	1001172193	2	Rivnut, M5X0.8	
9	1001227188	1	Seal, Cab Door	
10	1001170113J	1	Door, Cab (See Separate Breakdown in this Section)	
11	1001227187	1	Seal, Cab Door Window	
12	1001193210	AR	Shim, Window Latch	

FIGURE 6-6. CAB DOOR

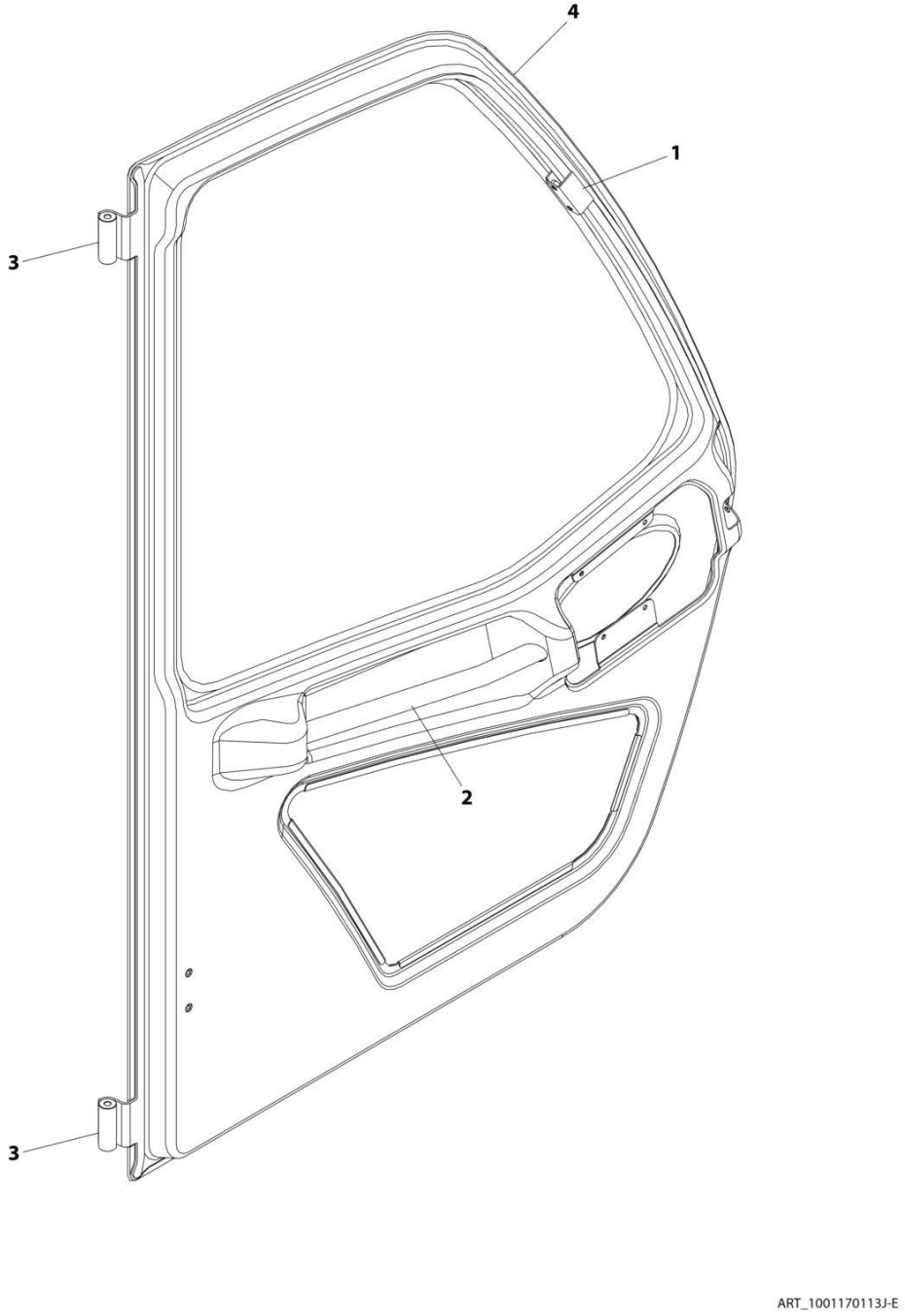

FIGURE 6-6. CAB DOOR

ITEM	PART NUMBER	QTY	DESCRIPTION	REV
	1001170113J	Ref	Cab Door	E
1	1001169883	1	Bracket, Window Latch	
2	1001169885	1	Handle, Interior Door	
3	1001171037	1	Plate, Hinge	
4	1001171635	1	Frame, Door	

FIGURE 6-7. DOOR UPPER GLASS ASSEMBLY

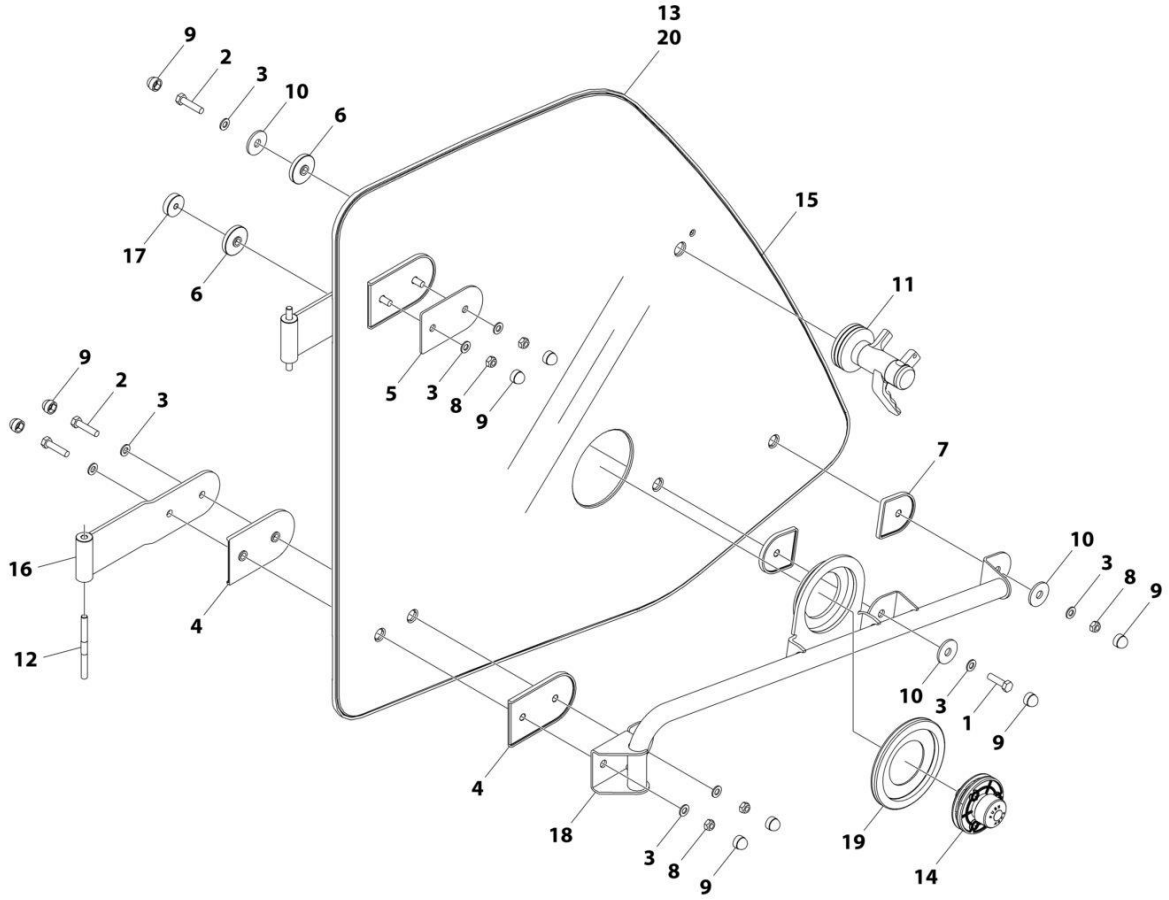

ART_1001205532

FIGURE 6-7. DOOR UPPER GLASS ASSEMBLY

ITEM	PART NUMBER	QTY	DESCRIPTION	REV
	1001205532	Ref	Door Upper Glass Assembly	G
1	0760812	1	Bolt, M8X25	
2	0760815	5	Bolt, M8X35	
3	4811900	11	Washer, 8MM	
4	1001002946	4	Mount, Hinge	
5	1001002947	1	Mount, Hinge	
6	1001002953	2	Mount, Rubber	
7	1001002957	2	Mount, Latch	
8	1001008857	5	Nut, Lock	
9	1001096365	11	Cap, M8	
10	1001141246	3	Mount, Rubber	
11	1001165275	1	Latch, Window	
12	1001166634	2	Pin, Hinge	
13	1001170944	1	Panel, Window Surround	
14	1001174321	1	Striker, Top Window	
15	1001204066	1	Glass, Window	
16	1001204115	2	Hinge	
17	1001222741	1	Buffer, Cab	
18	1001204120	1	Handle	
19	1001213331	1	Gasket	
20	1001215531	AR	Adhesive	

FIGURE 6-8. CAB LATCH ASSEMBLY

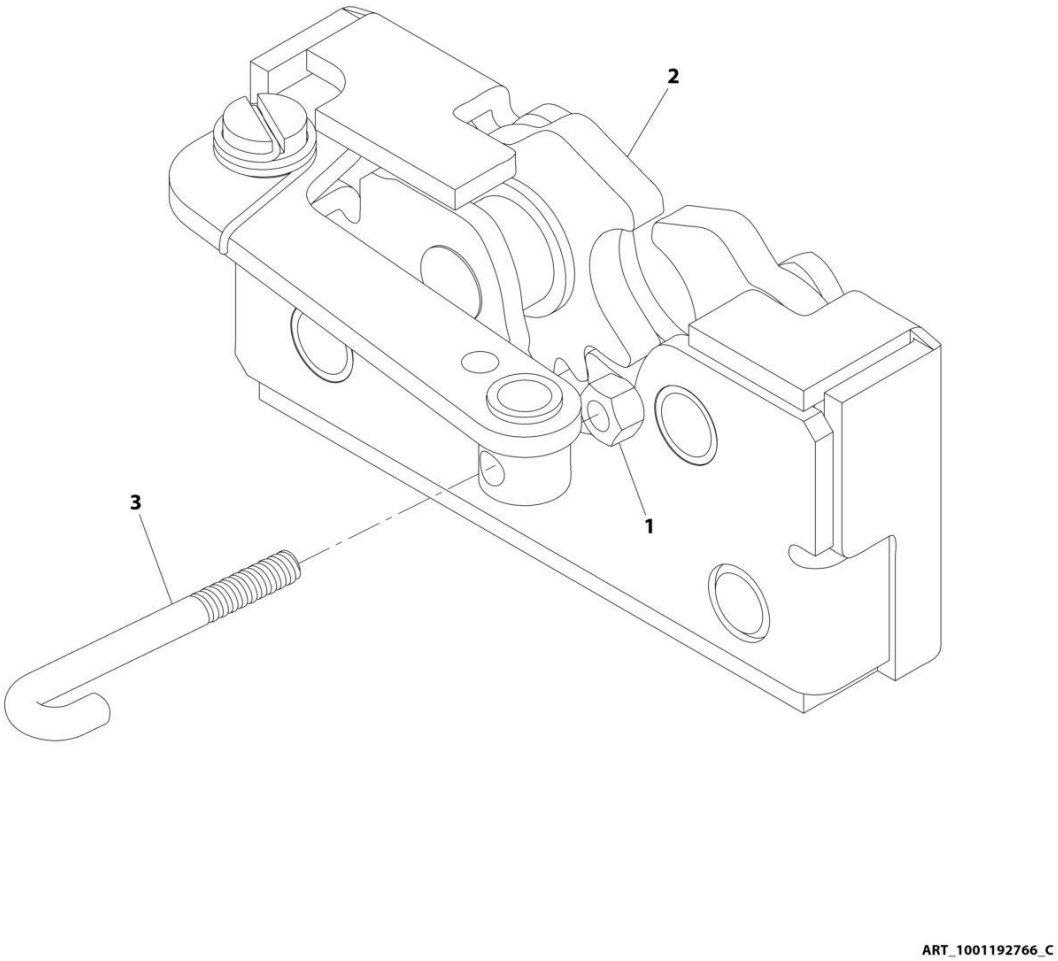

FIGURE 6-8. CAB LATCH ASSEMBLY

ITEM	PART NUMBER	QTY	DESCRIPTION	REV
	1001192766	Ref	Cab Latch Assembly	C
1	3290405	1	Nut, M4X0.7 Grade 8	
2	1001192643	1	Latch	
3	1001241308	1	Link, Door Handle	

FIGURE 6-9. CAB DOOR TRIGGER ASSEMBLY

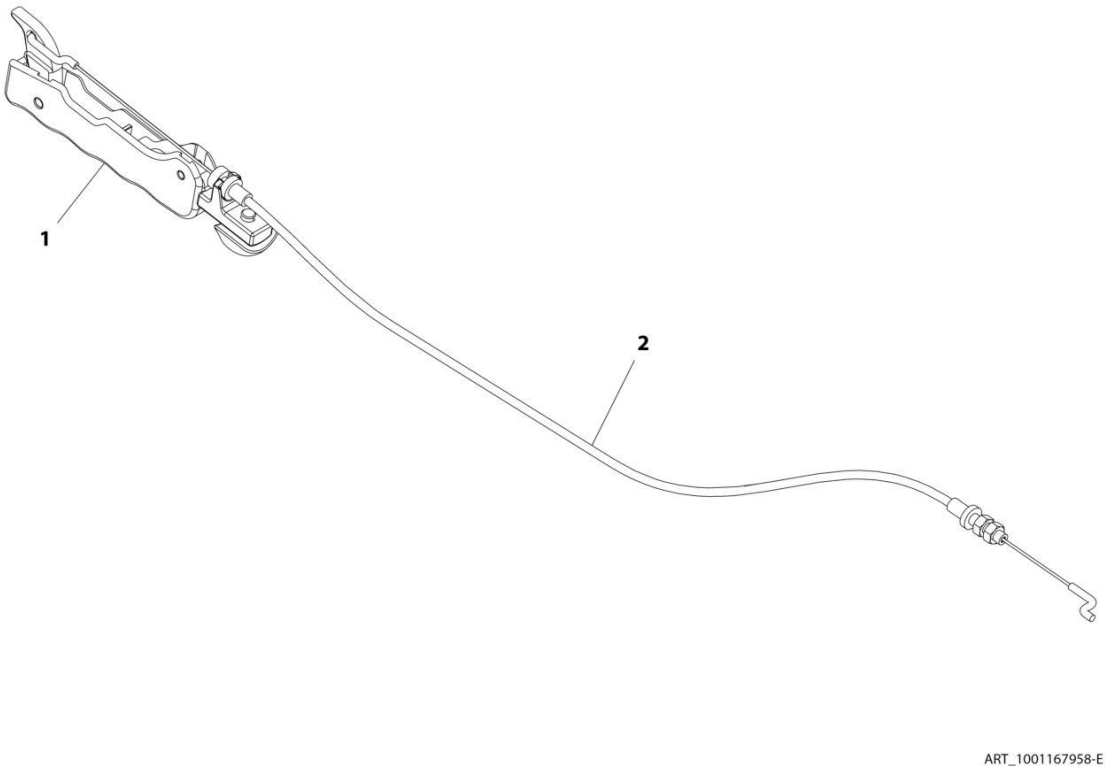

FIGURE 6-9. CAB DOOR TRIGGER ASSEMBLY

ITEM	PART NUMBER	QTY	DESCRIPTION	REV
	1001167958	Ref	Cab Door Trigger Assembly	E
1	1001167937	1	Trigger, Cab Interior Release	
2	1001192644	1	Cable, Cab Latch Release	

FIGURE 6-10. DOOR STRAP INSTALLATION

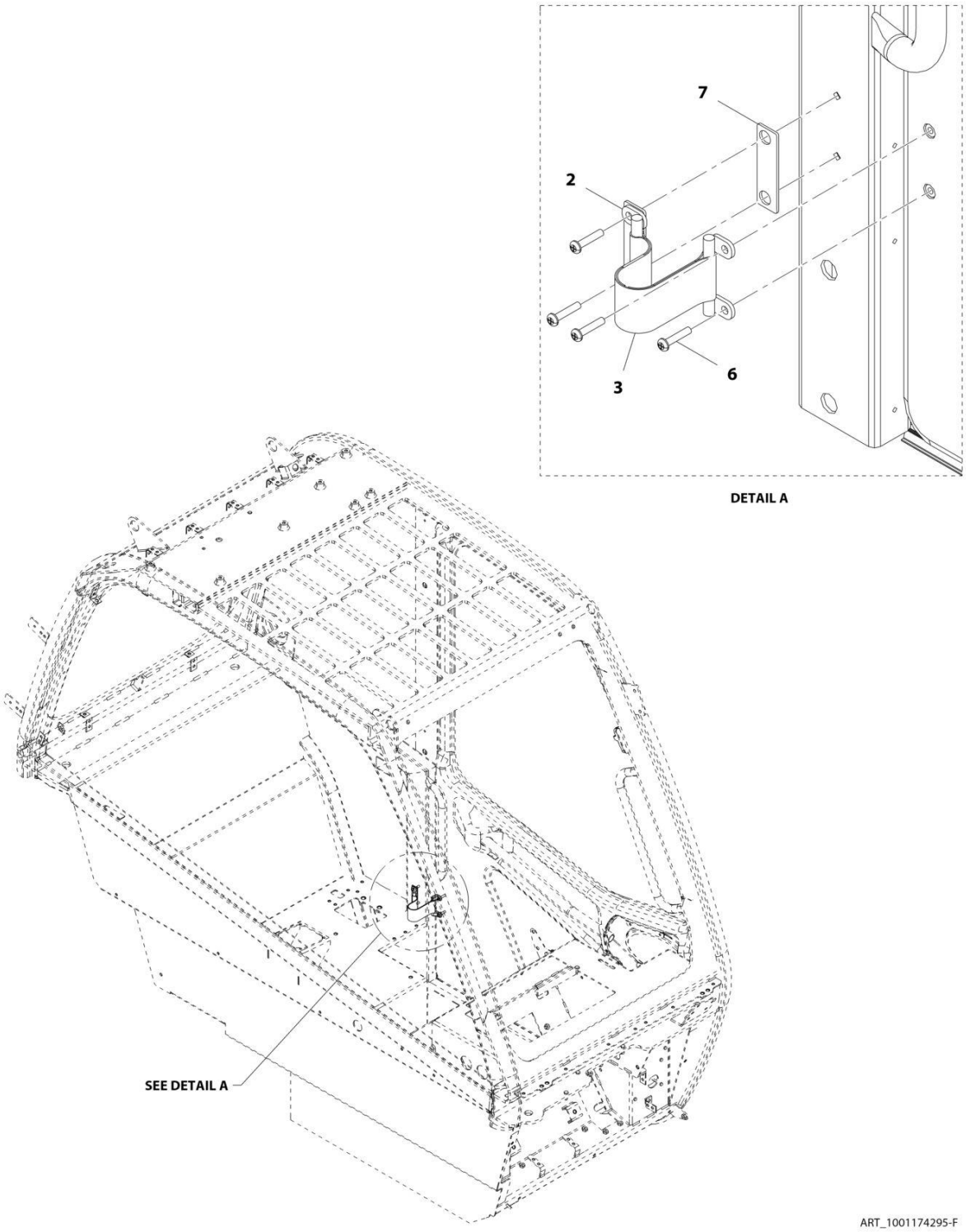

FIGURE 6-10. DOOR STRAP INSTALLATION

ITEM	PART NUMBER	QTY	DESCRIPTION	REV
	1001174295	Ref	Door Strap Installation	F
2	1001230163	2	Bracket, Strap Holder	
3	1001212011	1	Strap, Door Hold Open	
6	8310559	4	Screw	
7	1001191091	1	Plate, Cab Door Strap	

FIGURE 6-11. REAR WINDOW INSTALLATION

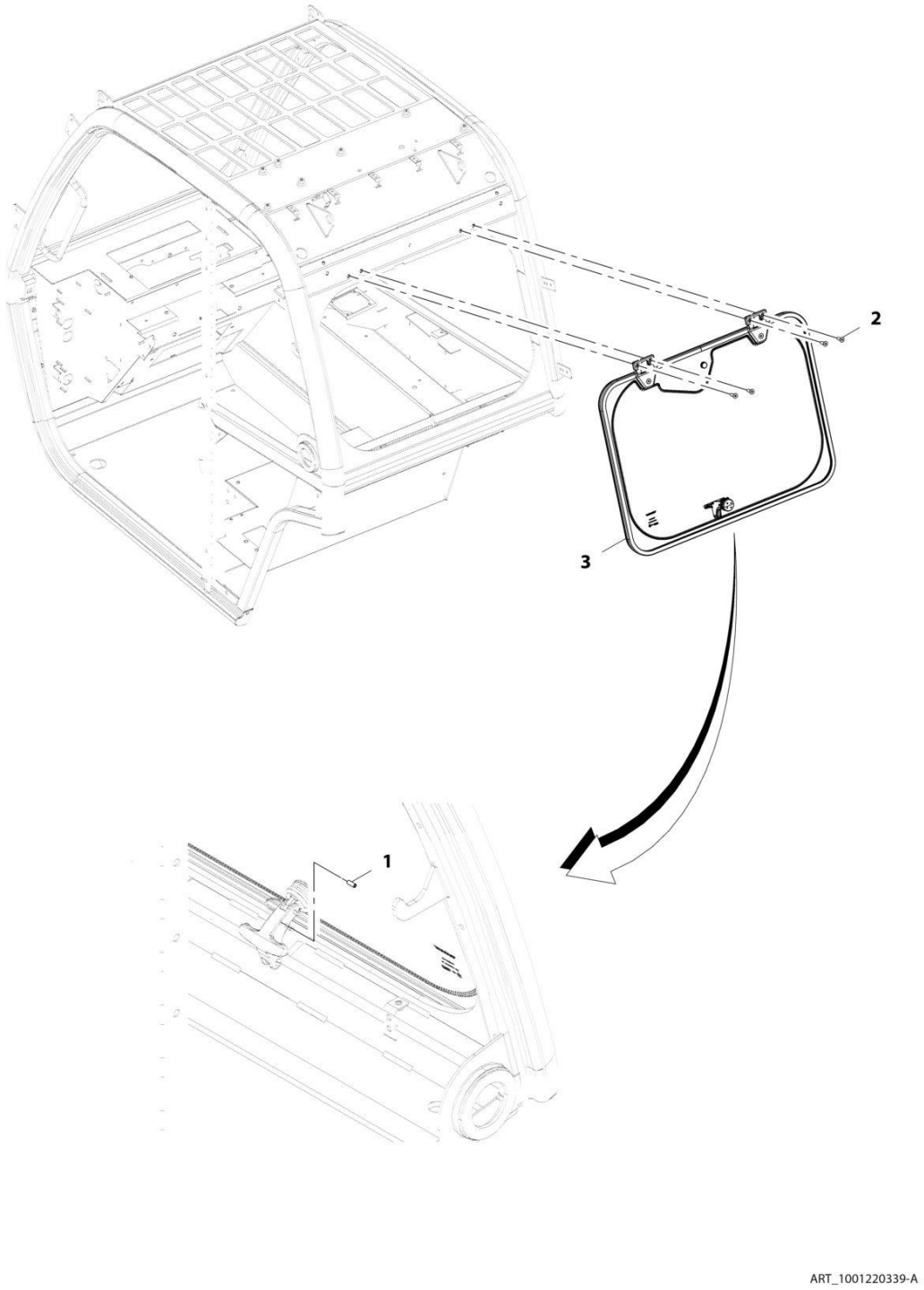

FIGURE 6-11. REAR WINDOW INSTALLATION

ITEM	PART NUMBER	QTY	DESCRIPTION	REV
	1001220339	Ref	Rear Window Installation	A
1	1001003043	1	Pin, Spring	
2	1001097586	4	Screw, M8X1.25	
3	1001220338	1	Assembly, Rear Window (See Separate Breakdown in this Section)	

FIGURE 6-12. REAR WINDOW GROUP

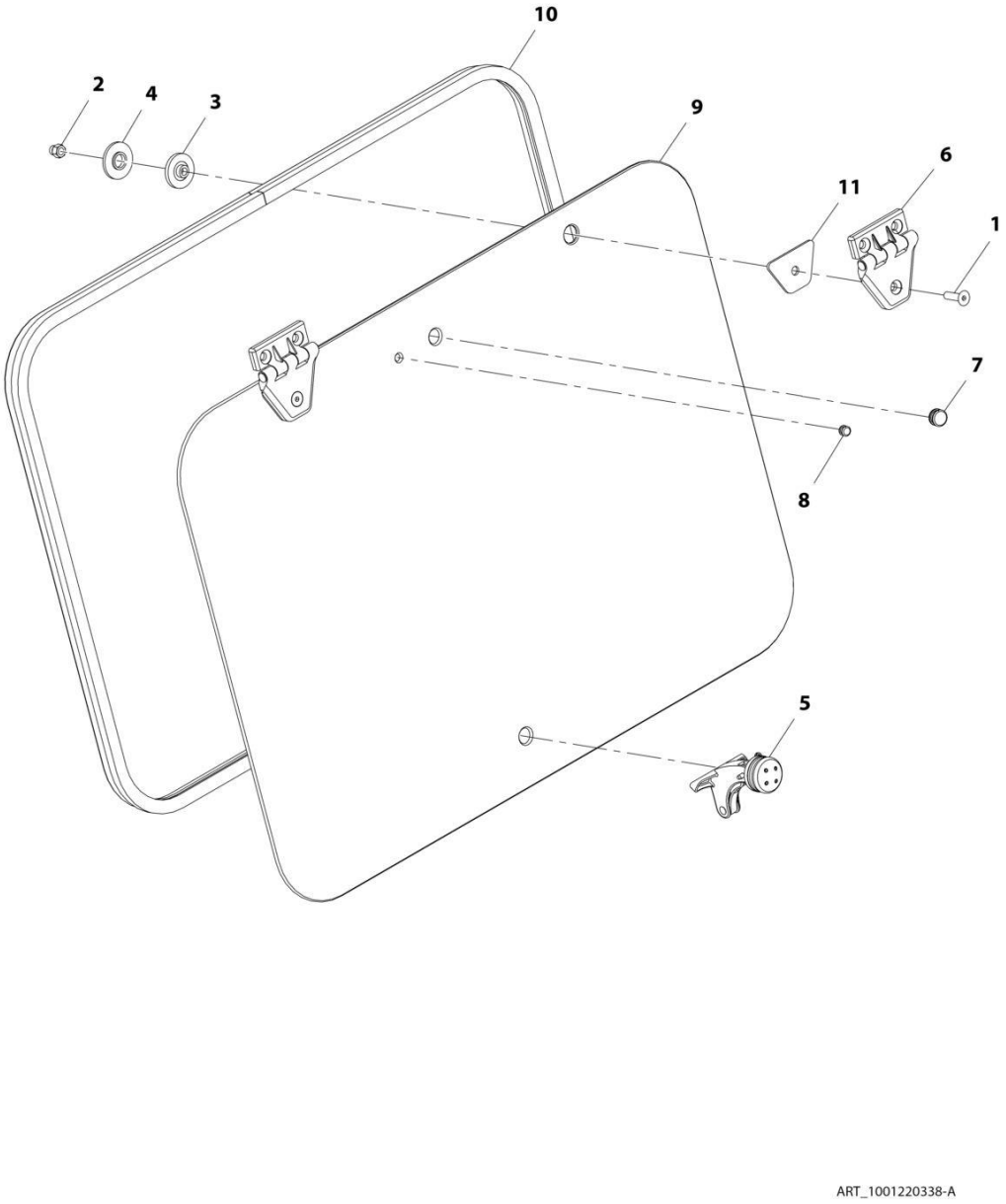

FIGURE 6-12. REAR WINDOW GROUP

ITEM	PART NUMBER	QTY	DESCRIPTION	REV
	1001220338	Ref	Rear Window Group	A
1	2080078	2	Fastener, M8X30	
2	3290806	2	Nut, M8X1.25 Grade 8	
3	8000759	2	Spacer	
4	8004398	2	Spacer	
5	1001005368	1	Latch, Window	
6	1001139568	2	Hinge	
7	1001171182	1	Grommet	
8	1001171183	1	Grommet	
9	1001178680	1	Glass, Rear Window	
10	1001178681	1	Seal	
11	1001181411	2	Gasket, Rear Window Hinge	

FIGURE 6-13. CAB PLUG GROUP

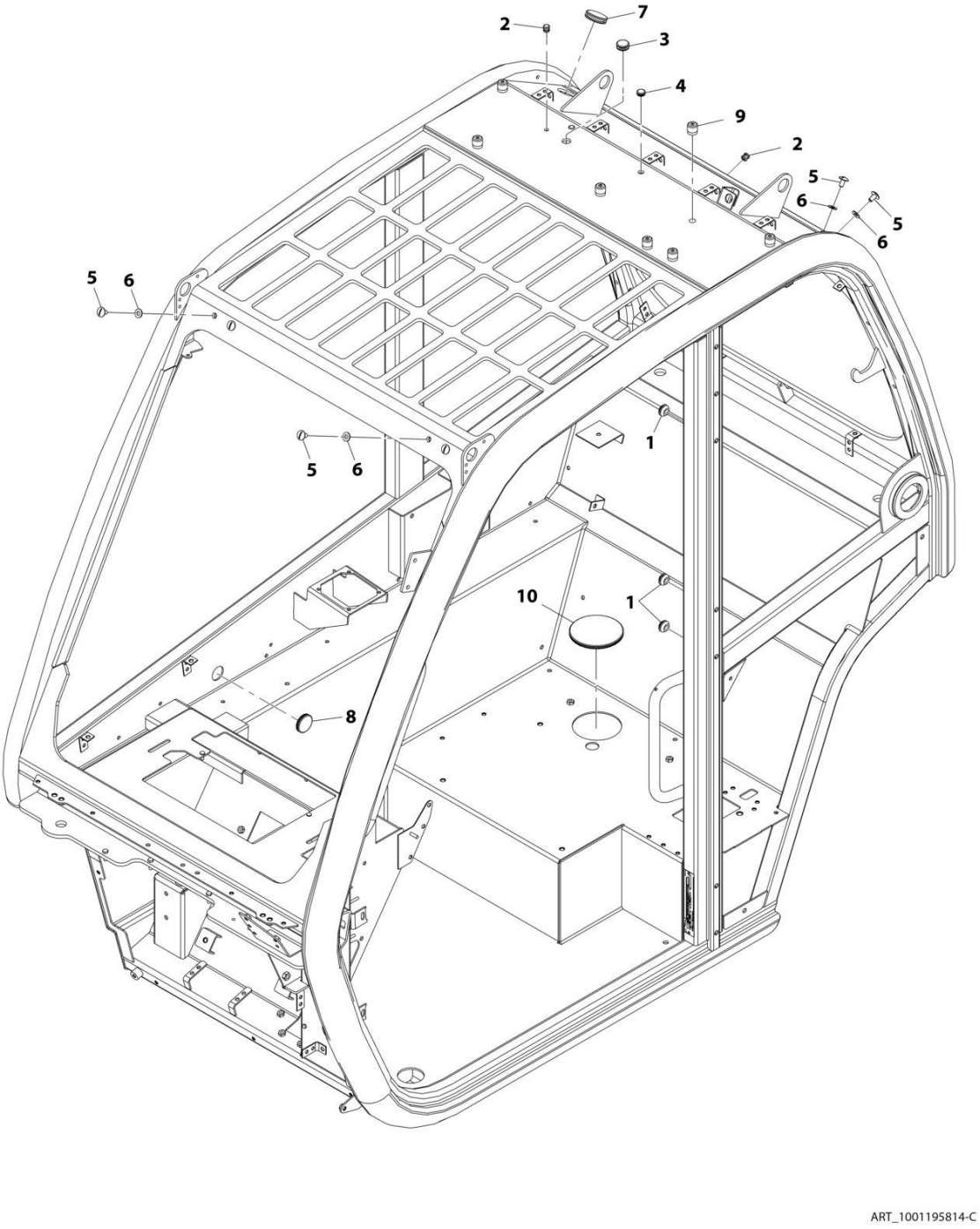

FIGURE 6-13. CAB PLUG GROUP

ITEM	PART NUMBER	QTY	DESCRIPTION	REV
	1001195814	Ref	Cab Plug Group	C
1	1001143200	7	Plug	
2	1001176272	3	Plug	
3	1001176273	1	Plug	
4	1001176626	1	Plug	
5	1001181920	8	Screw, Nylon M8X16	
6	1001181921	8	Washer, Rubber M8	
7	1001182123	2	Plug	
8	1001182139	1	Plug	
9	1001219220	7	Plug	
10	1001209899	1	Plug	

FIGURE 6-14. BASIC MIRROR INSTALLATION

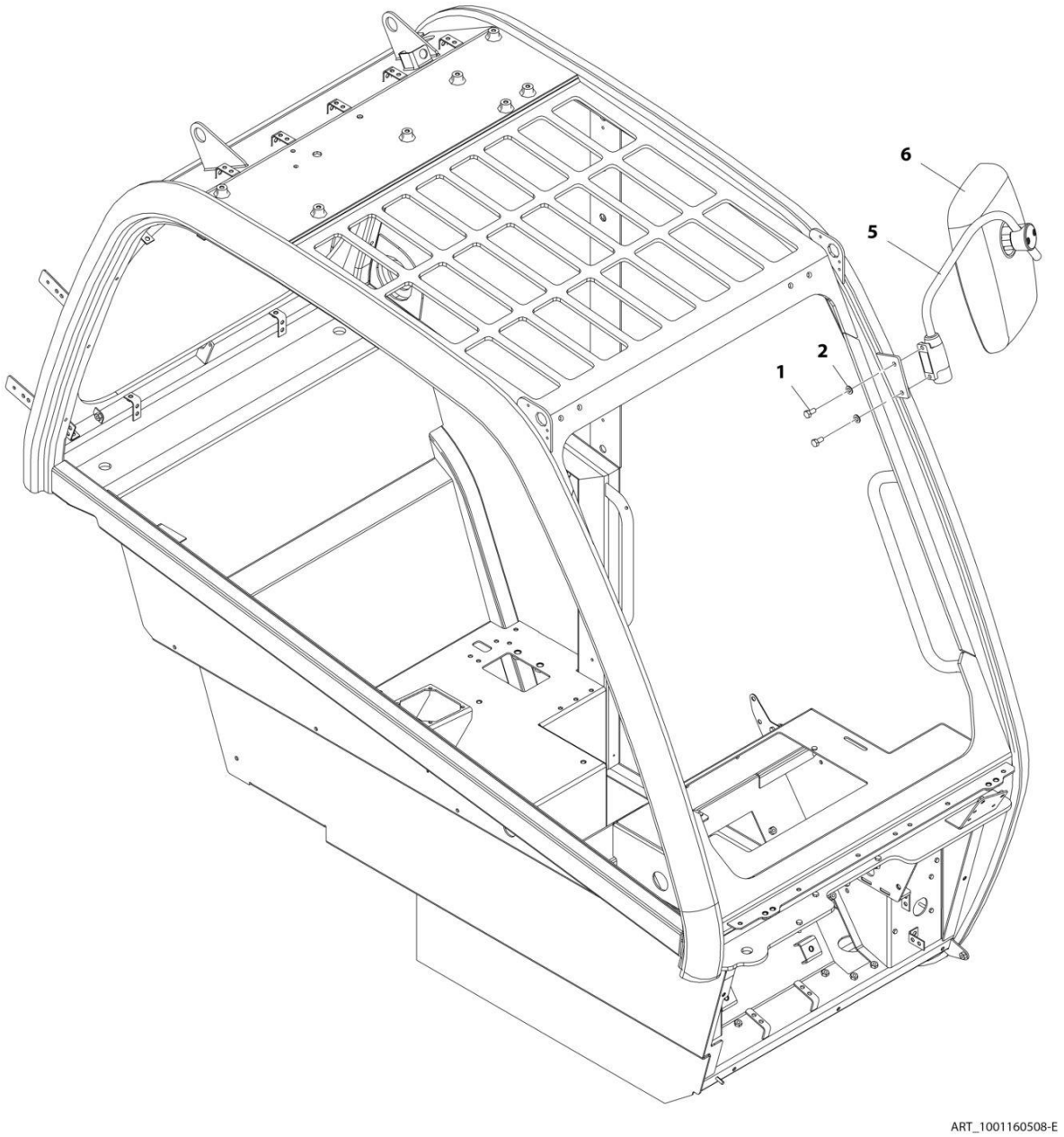

FIGURE 6-14. BASIC MIRROR INSTALLATION

ITEM	PART NUMBER	QTY	DESCRIPTION	REV
	1001160508	Ref	Basic Mirror Installation	E
1	0760808	2	Bolt, M8X16	
2	4811900	2	Washer, M8	
5	1001164655	1	Bracket	
6	80363195	1	Mirror	

FIGURE 6-15. FRONT WIPER INSTALLATION

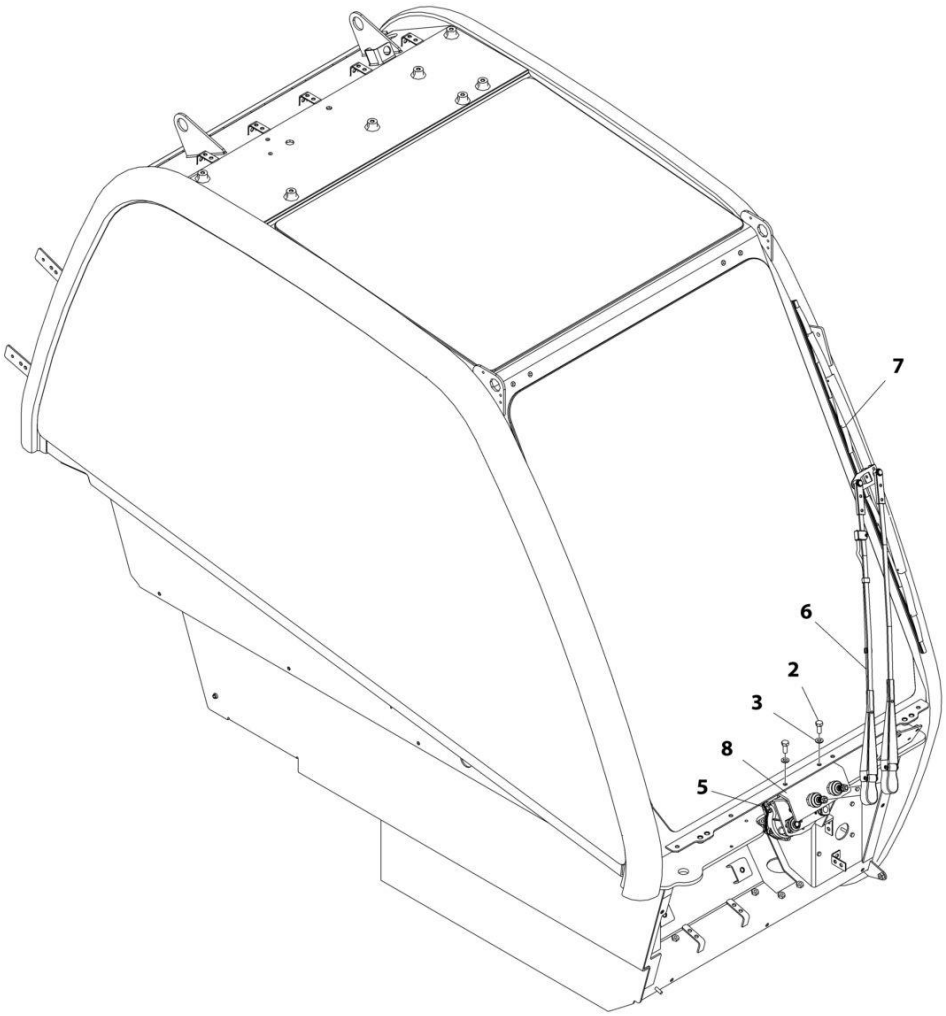

ART_1001155447-G

FIGURE 6-15. FRONT WIPER INSTALLATION

ITEM	PART NUMBER	QTY	DESCRIPTION	REV
	1001155447	Ref	Front Wiper Installation	G
2	0760810	2	Bolt, M8X20	
3	4811900	2	Washer, M8	
5	1001214092	1	Motor, Front Wiper	
6	1001212369	1	Arm, Front Wiper	
7	1001141281	1	Blade, Wiper	
8	1001165637	1	Bracket	

FIGURE 6-16. WASHER TANK INSTALLATION

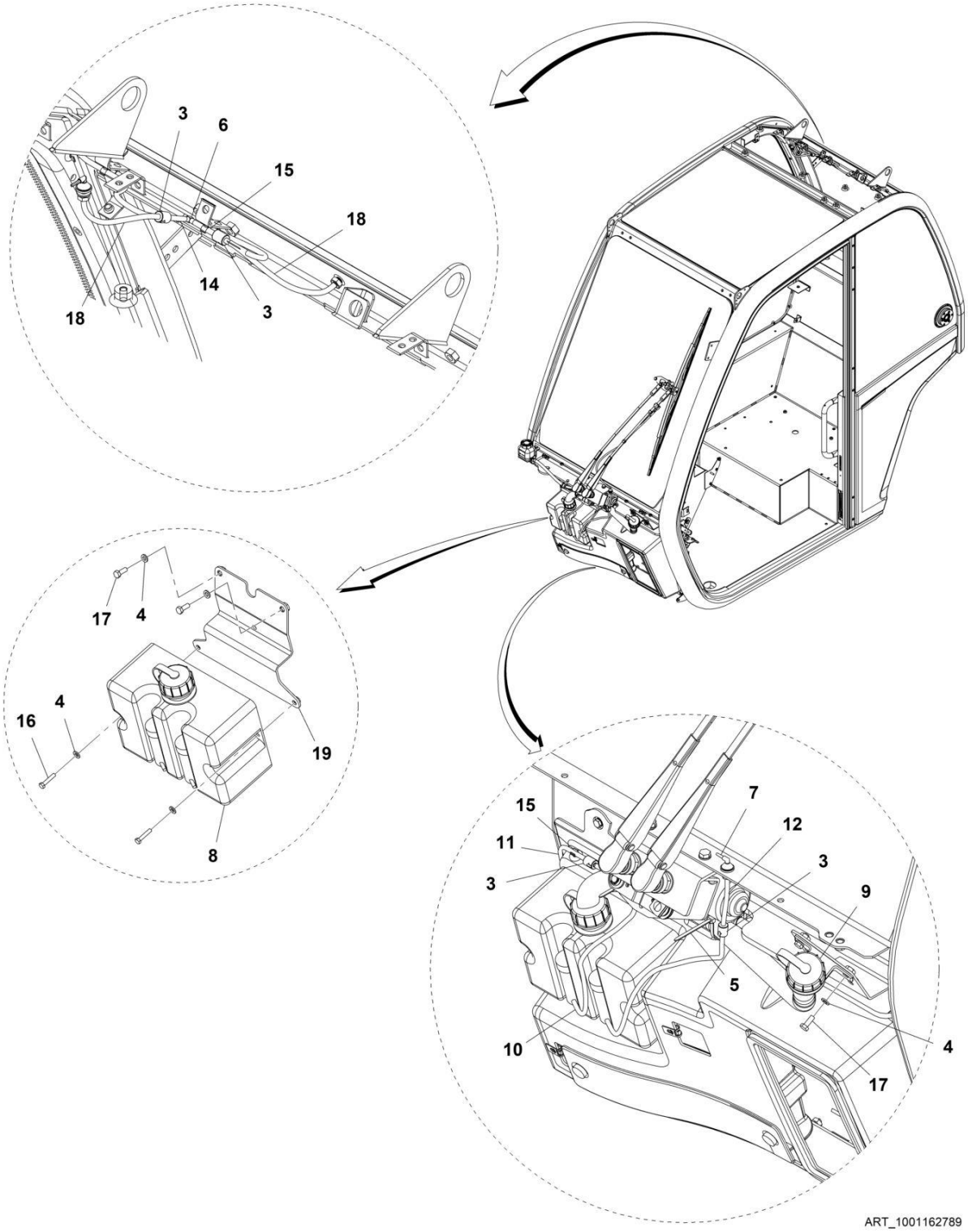

FIGURE 6-16. WASHER TANK INSTALLATION

ITEM	PART NUMBER	QTY	DESCRIPTION	REV
	1001162789	Ref	Washer Tank Installation	M
3	1001201331	4	Valve, Check	
4	4811700	6	Washer, M6	
5	471678	2	Strap, Tie	
6	1001008742	1	Coupling, Tee	
8	1001165269	1	Bottle, Washer (See Separate Breakdown in this Section)	
9	1001165270	1	Hose, Washer Filler	
10	1001165351	2	Hose	
11	1001165407	1	Hose	
12	1001165416	1	Hose	
14	1001165455	2	Hose	
15	1001165458	16	Hose	
16	0760512	2	Bolt M5X25	
17	0760608	4	Bolt, M6X16	
18	1001178123	2	Hose	
19	1001171756	1	Bracket	

FIGURE 6-17. WASHER BOTTLE

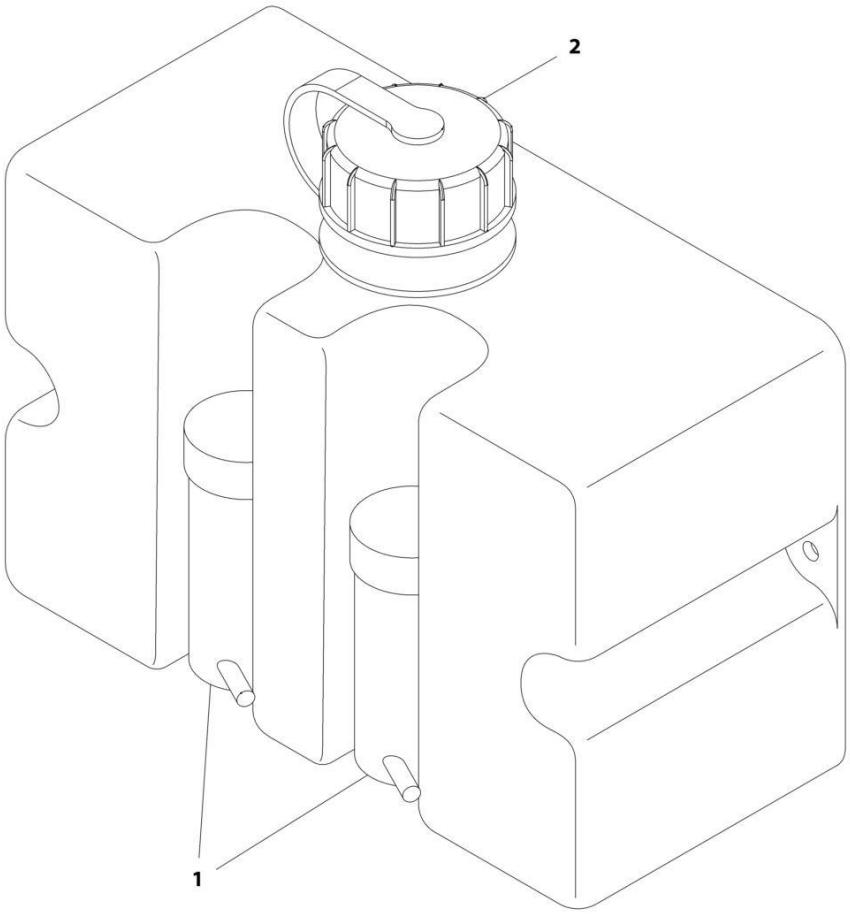

ART_1001165269-B

FIGURE 6-17. WASHER BOTTLE

ITEM	PART NUMBER	QTY	DESCRIPTION	REV
	1001165269	Ref	Washer Bottle	B
1	1001165327	2	Pump, Washer	
2	1001165273	1	Cap, Washer	

FIGURE 6-18. FRONT COVER INSTALLATION

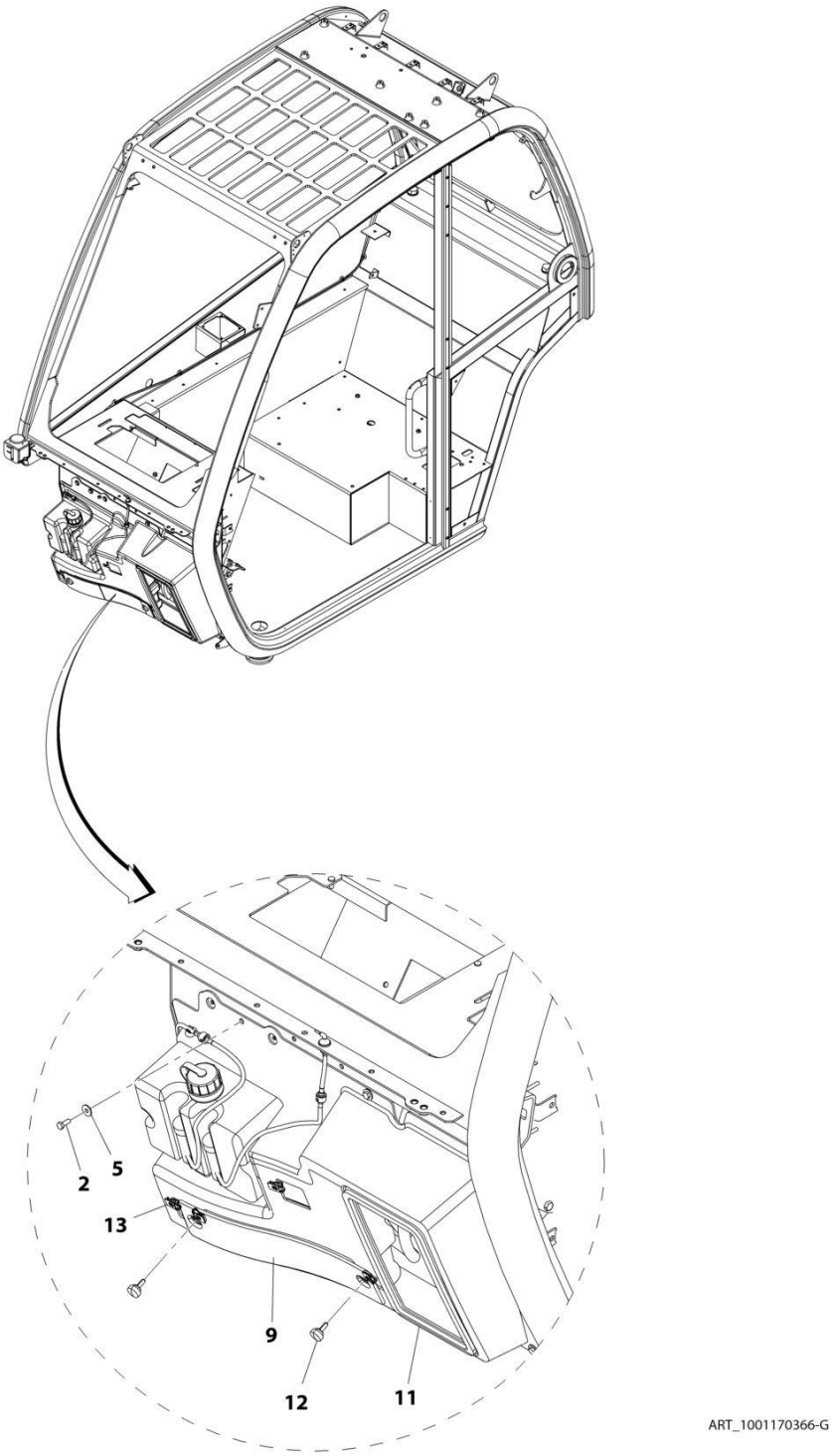

FIGURE 6-18. FRONT COVER INSTALLATION

ITEM	PART NUMBER	QTY	DESCRIPTION	REV
	1001170366	Ref	Front Cover Installation	G
2	0760608	7	Bolt, M6X16	
5	4811702	7	Washer, M6	
9	1001175471	1	Panel, Filter Tray (See Separate Breakdown in this Section)	
11	1001176121	1	Cover, Front Duct (See Separate Breakdown in this Section)	
12	2080092	2	Thumb Screw, M6X16	
13	8305919	4	Nut, M6	

FIGURE 6-19. FIRE EXTINGUISHER INSTALLATION

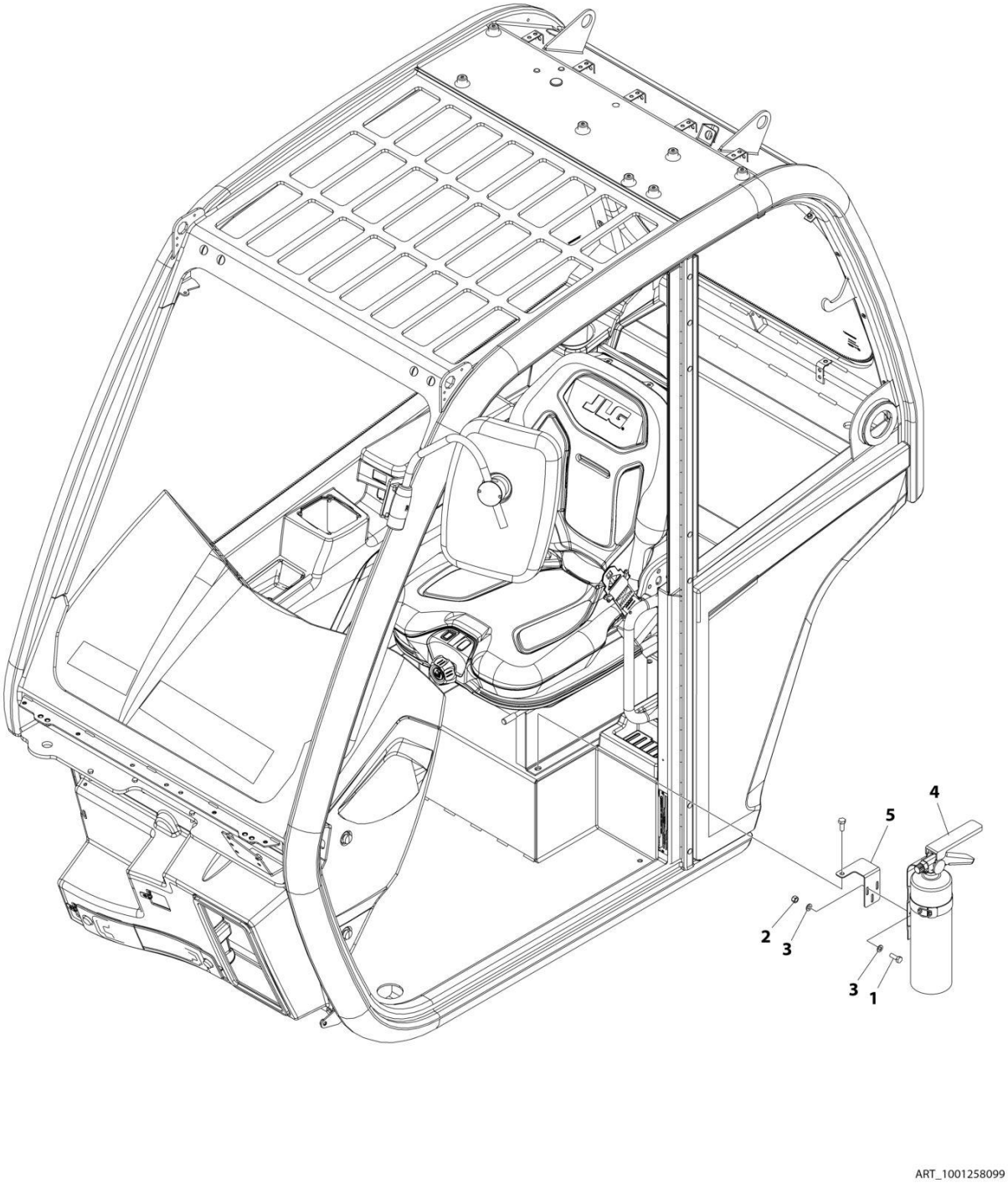

FIGURE 6-19. FIRE EXTINGUISHER INSTALLATION

ITEM	PART NUMBER	QTY	DESCRIPTION	REV
	1001258099	Ref	FIRE EXTINGUISHER INSTALLATION	A
1	0760507	3	Bolt M5X14	
2	3290505	3	Nut M5	
3	4811600	6	Washer M5	
4	1001099699	1	Fire Extinguisher Assy	
5	1001241337	1	Bracket	

FIGURE 6-20. FRONT DUCT COVER

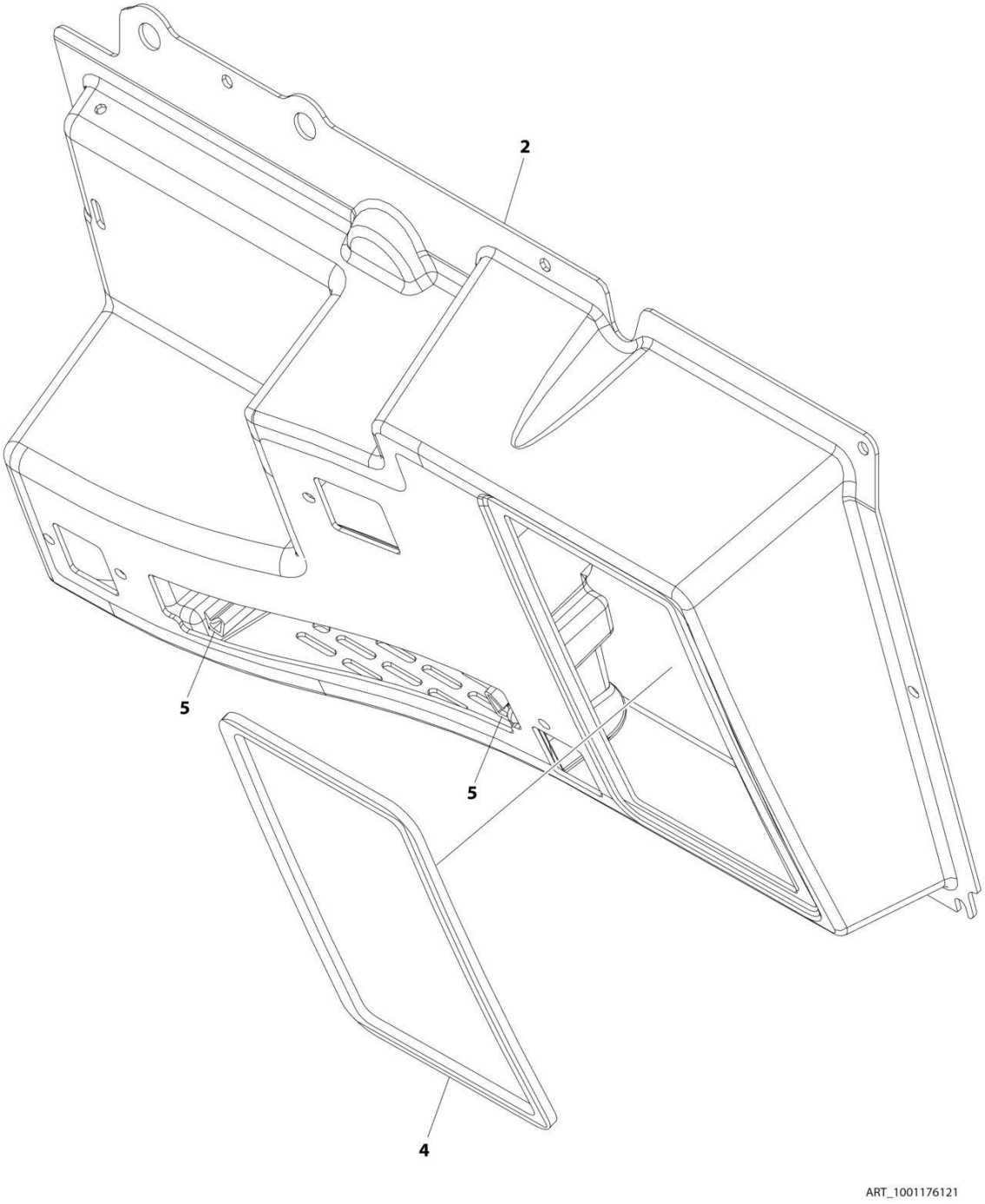

FIGURE 6-20. FRONT DUCT COVER

ITEM	PART NUMBER	QTY	DESCRIPTION	REV
	1001176121	Ref	FRONT DUCT COVER	H
2	1001170326	1	Cover, Front	
4	1001175470	1	Seal, Front Cab Panel	
5	1001270117	AR	Seal, Bulb	

FIGURE 6-21. FILTER TRAY PANEL

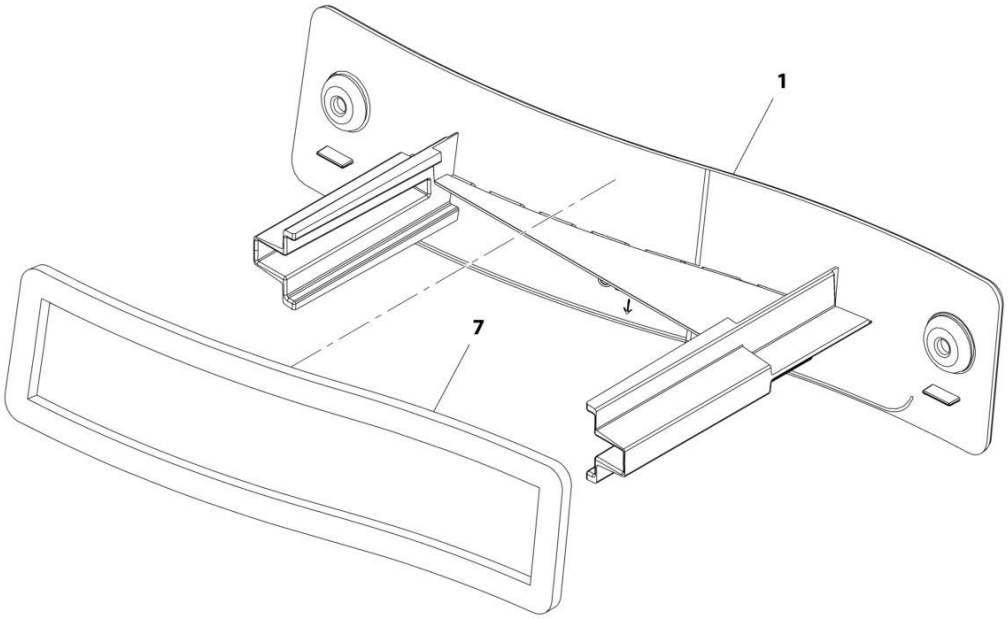

ART_1001175471-D

FIGURE 6-21. FILTER TRAY PANEL

ITEM	PART NUMBER	QTY	DESCRIPTION	REV
	1001175471	Ref	Filter Tray Panel	D
1	1001170993	1	Panel, Front Inlet	
7	1001171767	1	Cab, Front Panel Seal	

FIGURE 6-22. LEVEL INDICATOR INSTALLATION

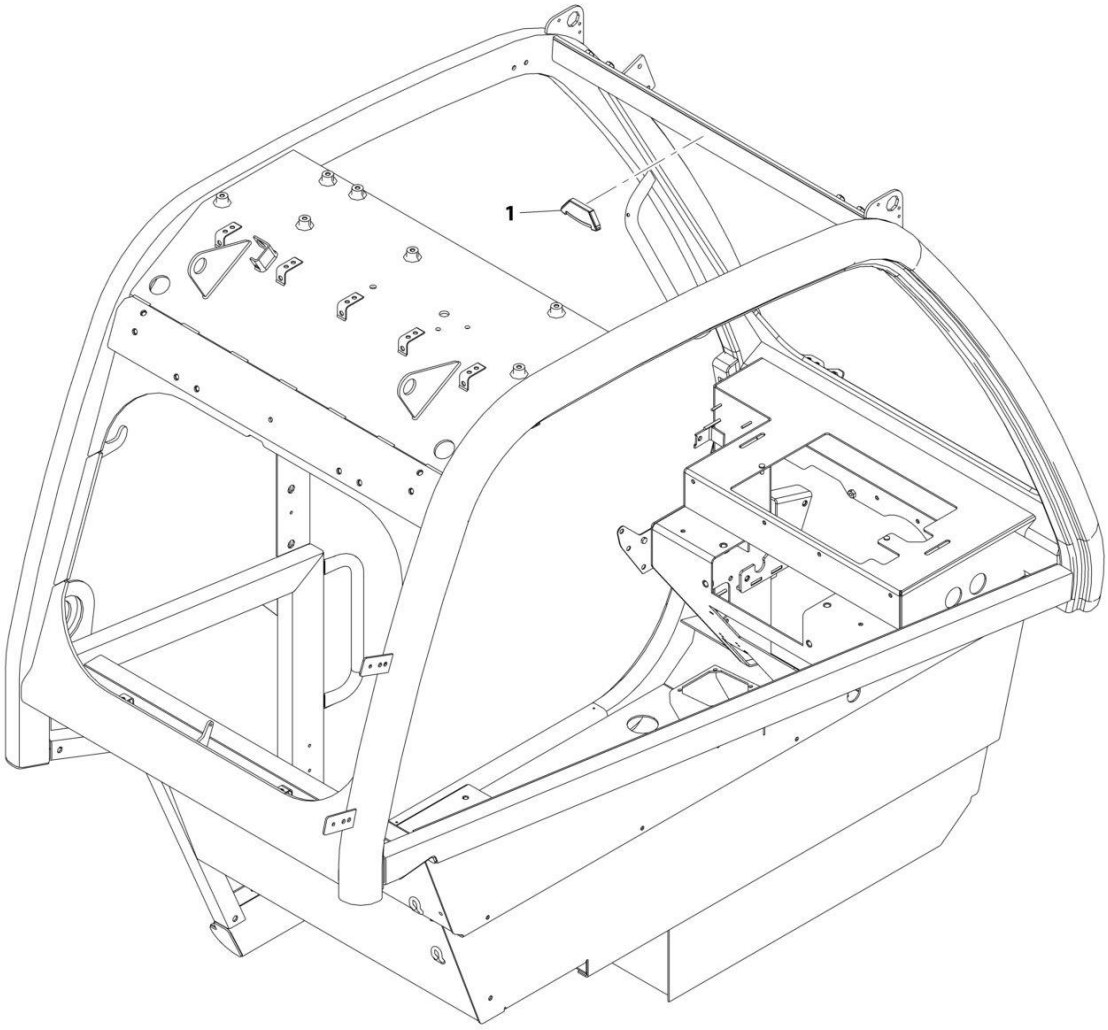

FIGURE 6-22. LEVEL INDICATOR INSTALLATION

ITEM	PART NUMBER	QTY	DESCRIPTION	REV
	1001172401	Ref	Level Indicator Installation	C
1	8466306	1	Gauge, Tilt Angle	

FIGURE 6-23. CAB STORAGE TRAY INSTALLATION

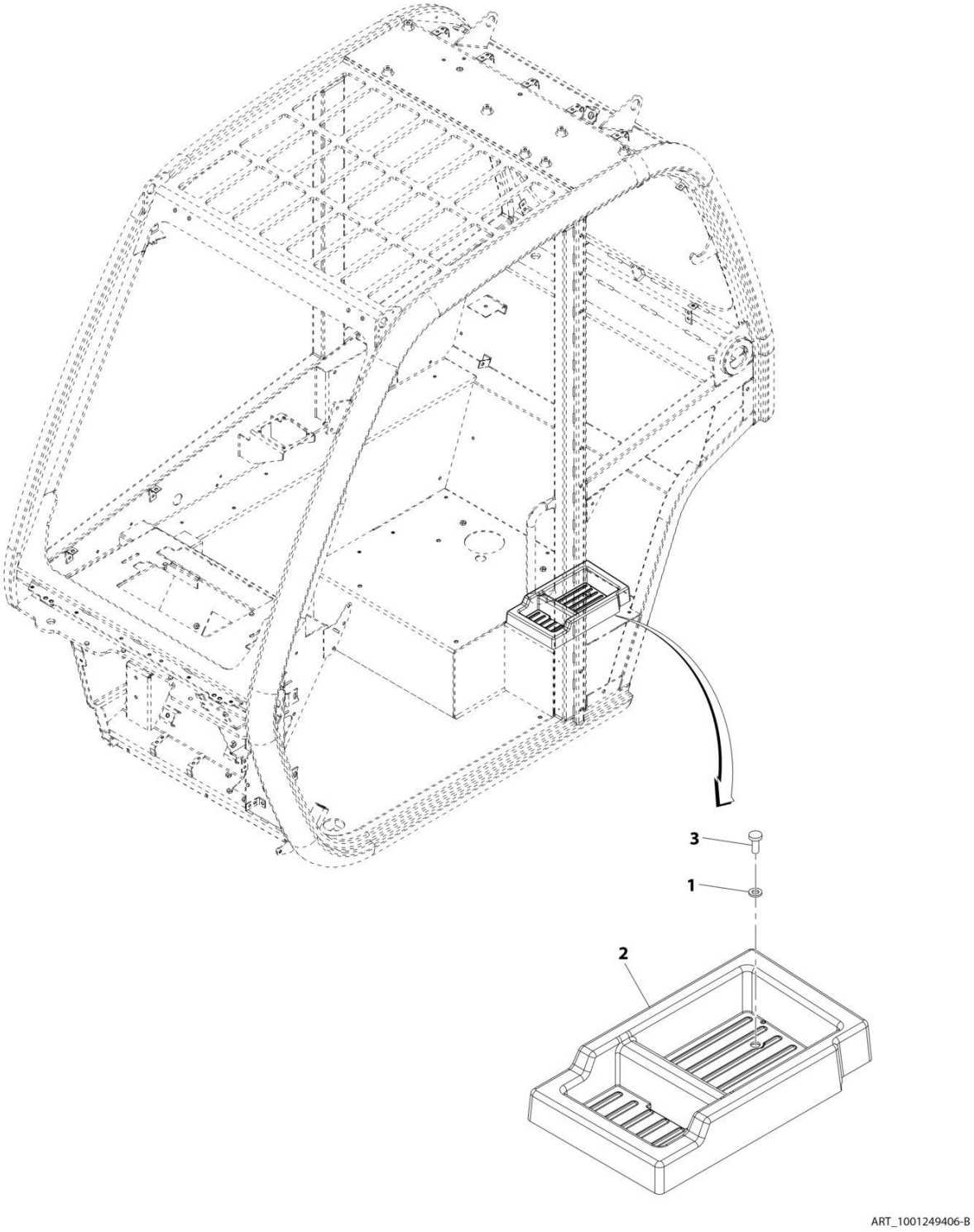

FIGURE 6-23. CAB STORAGE TRAY INSTALLATION

ITEM	PART NUMBER	QTY	DESCRIPTION	REV
	1001249406	Ref	Cab Storage Tray Installation	B
1	4811700	1	Washer, M6	
2	1001170515	1	Insert, Storage Tray	
3	4010608002	1	Screw, Posi-Drive, M6X16	

FIGURE 6-24. GRAB HANDLE INSTALLATION

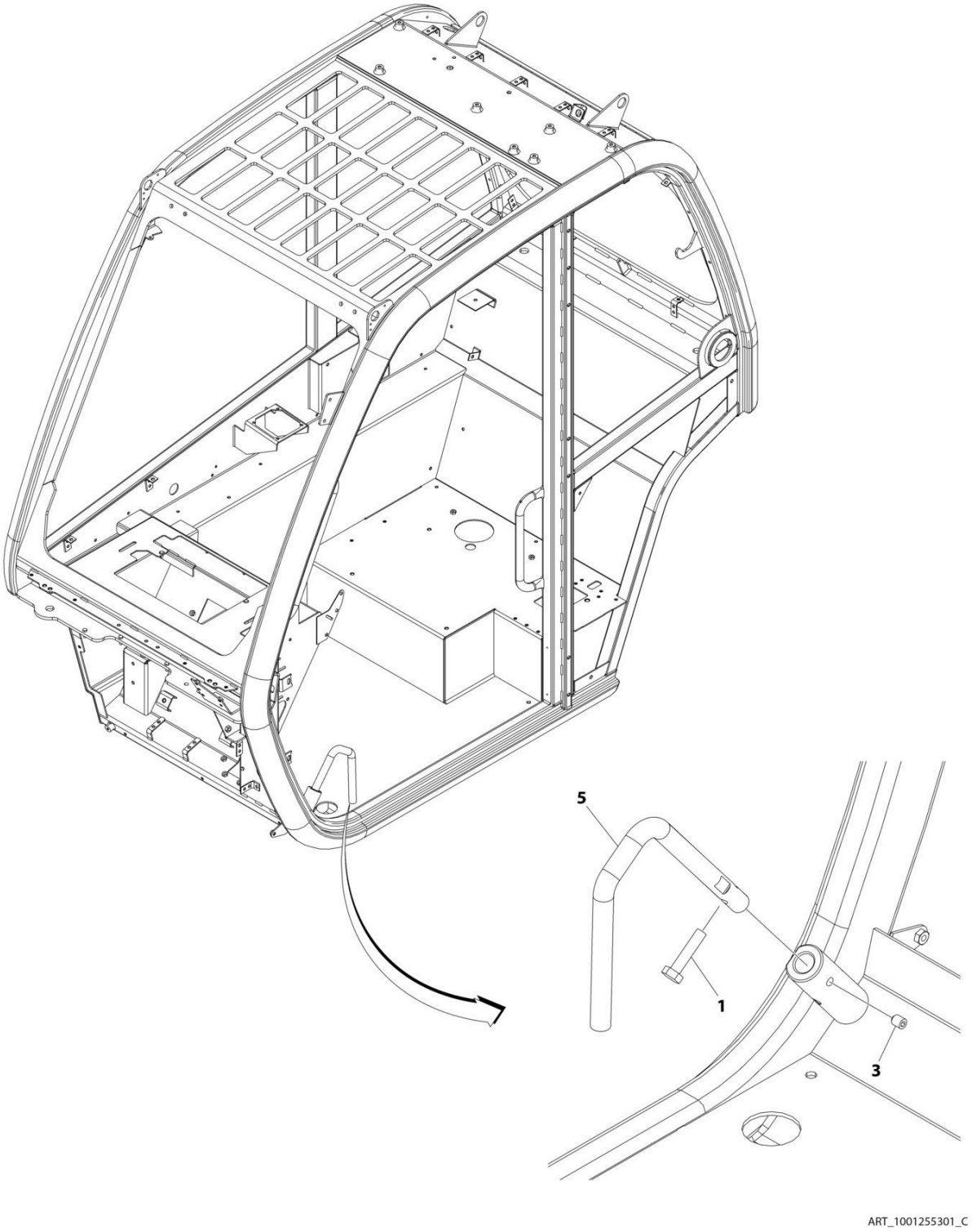

FIGURE 6-24. GRAB HANDLE INSTALLATION

ITEM	PART NUMBER	QTY	DESCRIPTION	REV
	1001255301	Ref	Grab Handle Installation	C
1	0761015001	1	Bolt, M10X35	
3	4092006	1	Bolt, M10X12	
5	1001247335	1	Handle	

FIGURE 6-25. REAR WIPER INSTALLATION

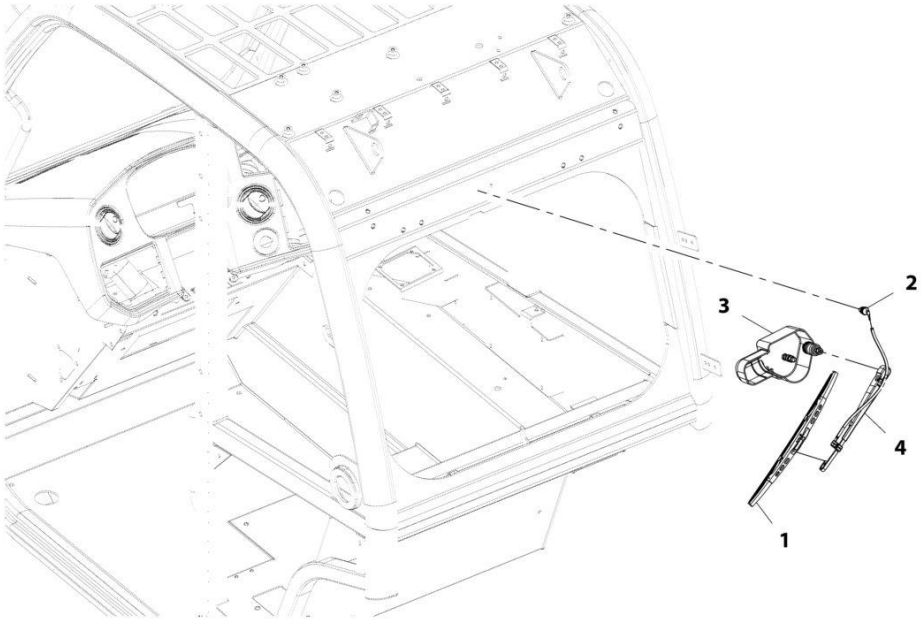

ART_1001220329-A

FIGURE 6-25. REAR WIPER INSTALLATION

ITEM	PART NUMBER	QTY	DESCRIPTION	REV
	1001220329	Ref	Rear Wiper Installation	A
1	4807718	1	Wiper Blade, Oslv Italia	
2	1001090343	1	Connector	
3	1001139552	1	Motor, Wiper, Rear Window	
4	1001141312	1	Blade, Arm, Rear Window	

FIGURE 6-26. MULTIFUNCTION DISPLAY INSTALLATION

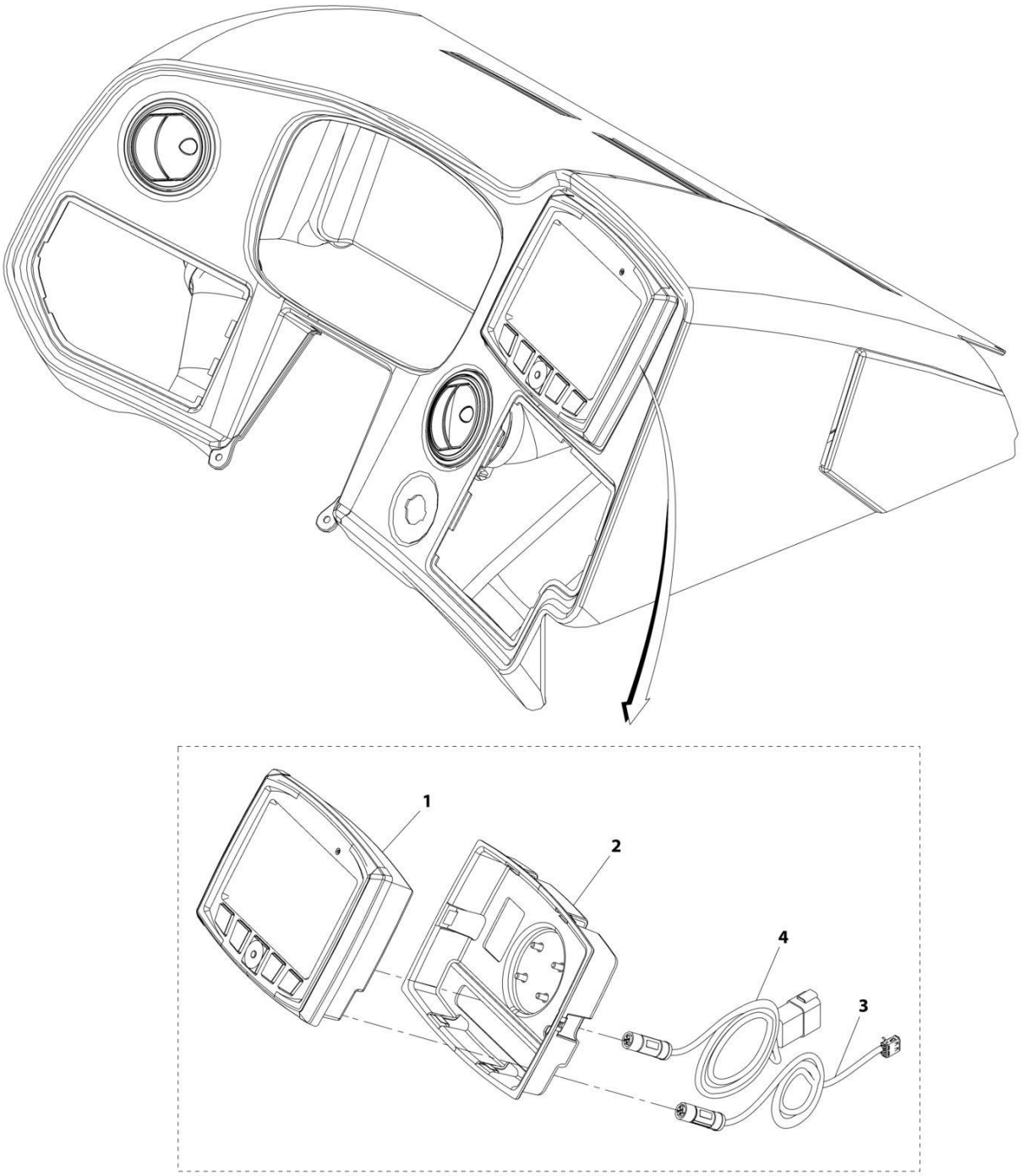

FIGURE 6-26. MULTIFUNCTION DISPLAY INSTALLATION

ITEM	PART NUMBER	QTY	DESCRIPTION	REV
	1001176338	Ref	Multifunction Display Installation	C
1	1001250161	1	Display	
2	1001178783	1	Bezel	
3	1001180682	1	Cable	
4	1001180683	1	Cable, Video	

FIGURE 6-27. SEAT INSTALLATION

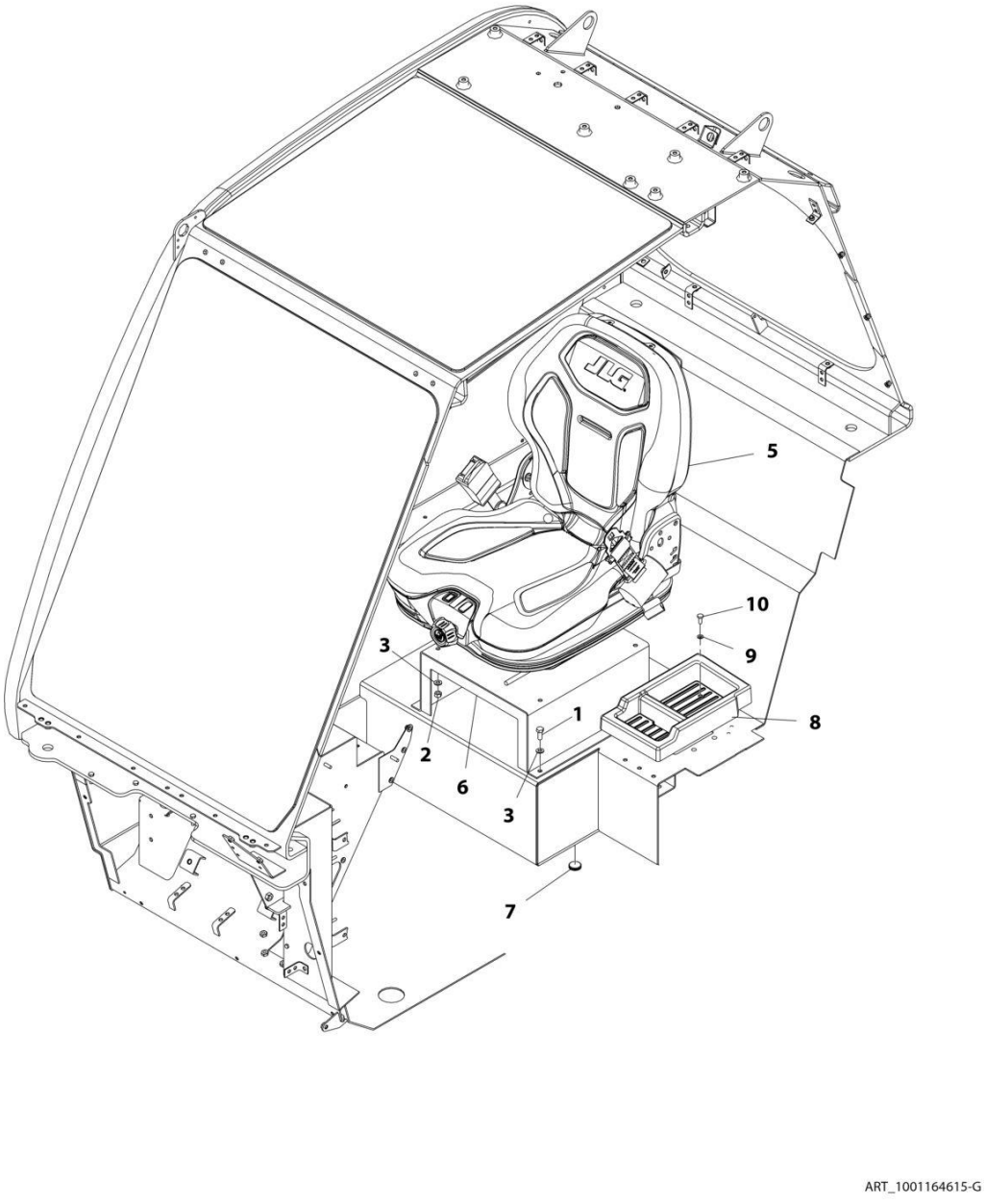

FIGURE 6-27. SEAT INSTALLATION

ITEM	PART NUMBER	QTY	DESCRIPTION	REV
	1001164615	Ref	Seat Installation	I
1	0760810	4	Bolt, M8X20	
2	3311505	4	Nut, Lock 5/16-18	
3	4811900	8	Washer, M8	
5	1001275929	1	Seat (See Separate Breakdown in this Section)	
6	1001164498	1	Plinth, Seat	
7	1001196076	1	Plug	
8	1001170515	1	Insert, Storage Tray	
9	4811700	1	Washer, M6	
10	4010608002	1	Screw, Posi-Drive, M6X16	

FIGURE 6-28. SUSPENSION SEAT ASSEMBLY

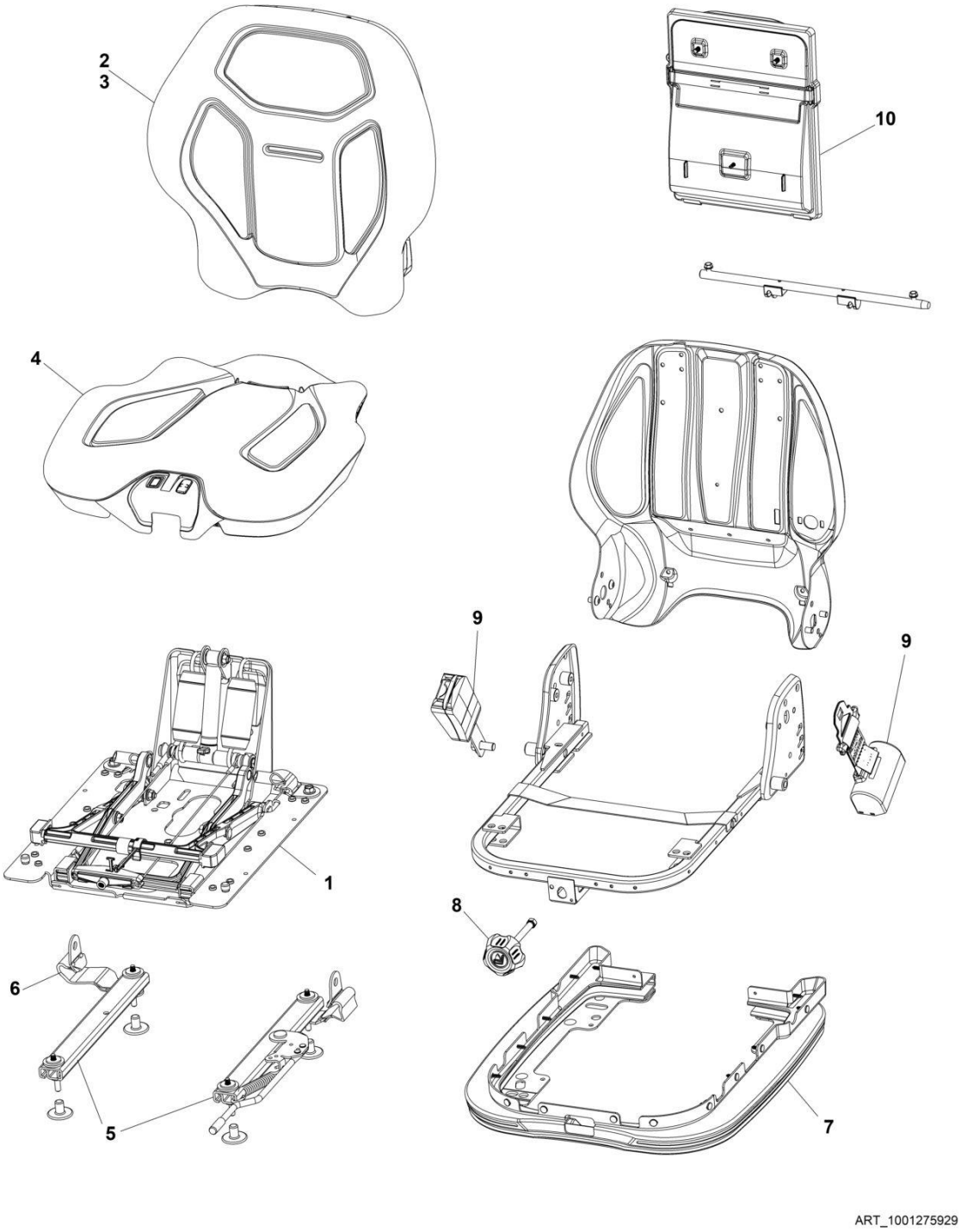

FIGURE 6-28. SUSPENSION SEAT ASSEMBLY

ITEM	PART NUMBER	QTY	DESCRIPTION	REV
	1001275929	Ref	Seat Assembly	A
1	70027024	1	Suspension Kit	
2	70027026	1	Back Cushion Kit (JLG)	
3	70027027	1	Back Cushion Kit (CAT)	
4	70027028	1	Seat Cushion Kit	
5	7026798	1	Adjuster Kit	
6	70027032	1	Tether strap	
7	70027030	1	Boot Kit	
8	70027033	1	Weight Adjust Knob Kit	
9	1001275933	1	Seat Belt	
10	70027035	1	Document box Kit	

FIGURE 6-29. SEAT INSTALLATION (CLOTH)

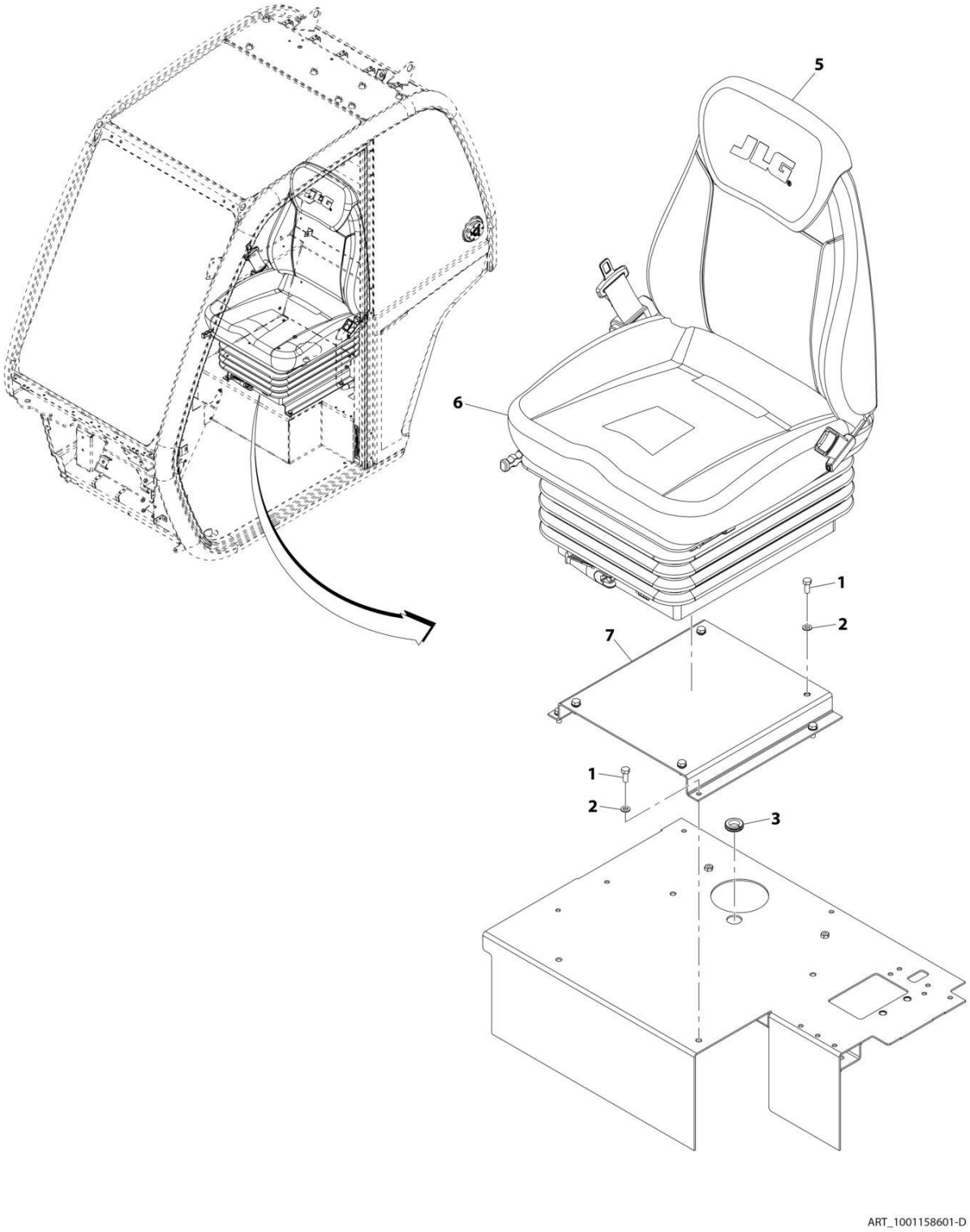

FIGURE 6-29. SEAT INSTALLATION (CLOTH)

ITEM	PART NUMBER	QTY	DESCRIPTION	REV
	1001158601	Ref	Seat Installation (Cloth)	D
1	0760810	8	Bolt, M8X20	
2	4811900	8	Washer, M8	
3	1001216974	1	Grommet	
5	1001119467	1	Headrest, Cloth	
6	1001150294	1	Assembly, Seat (See Separate Breakdown in this Section)	
7	1001158738C	1	Plinth, Seat	

FIGURE 6-30. SEAT ASSEMBLY

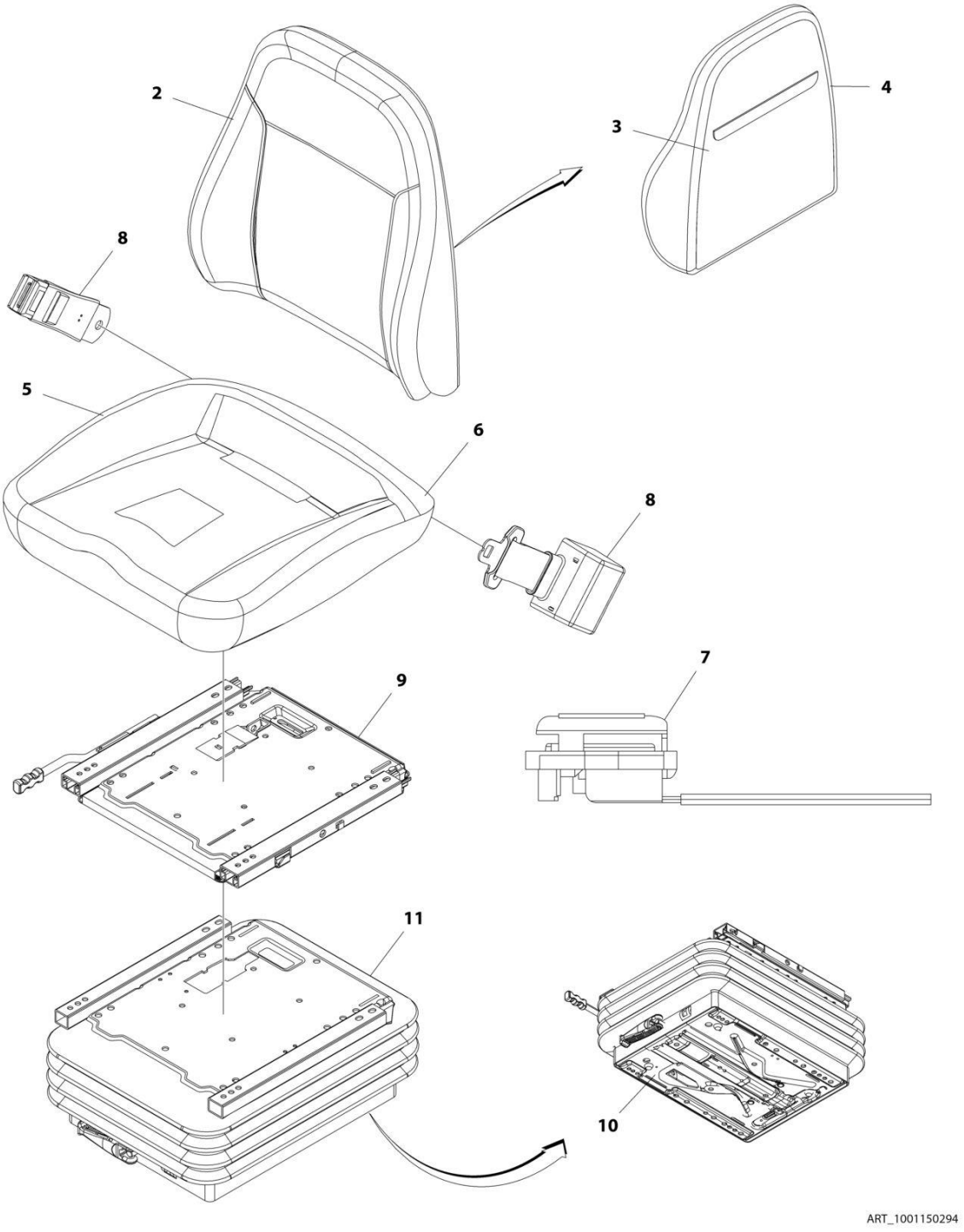

FIGURE 6-30. SEAT ASSEMBLY

ITEM	PART NUMBER	QTY	DESCRIPTION	REV
	1001150294	Ref	CLOTH SEAT	F
2	70025489	1	Fabric, Upper Seat	
3	70025490	1	Cover, Back	
4	70025483	1	Foam, Back	
5	70025491	1	Cover, Seat	
6	70025485	1	Foam, Seat	
7	70025486	1	Switch, Contact	
8	7029767	1	Belt, Seat	
9	70021252	1	Rail, Slide	
10	70021251	1	Unit, Suspension	
11	70022034	1	Cover, Rubber	

FIGURE 6-31. SEAT ASSEMBLY

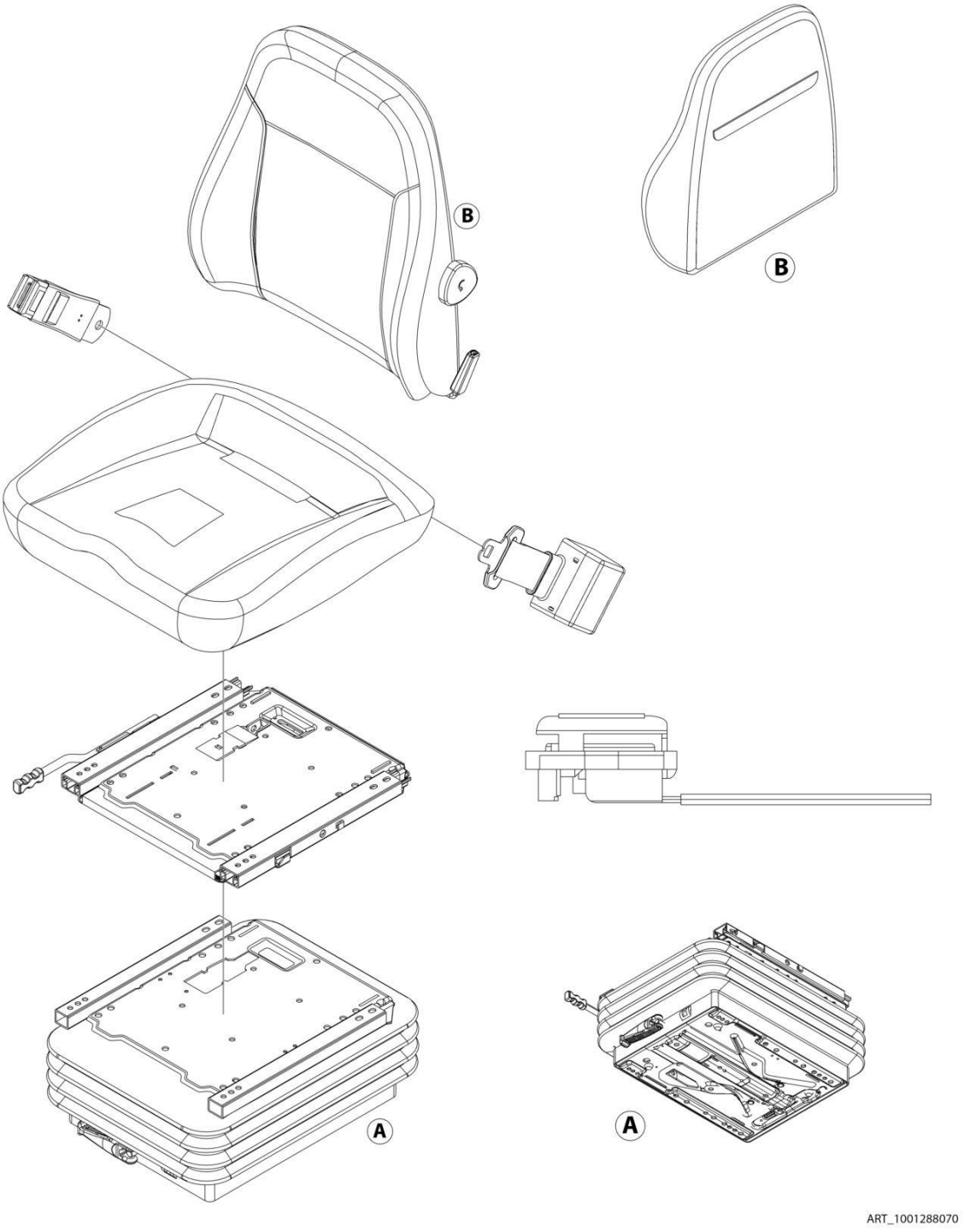

FIGURE 6-31. SEAT ASSEMBLY

ITEM	PART NUMBER	QTY	DESCRIPTION	REV
	1001288070	Ref	SEAT ASSEMBLY	A
	See Note	NSS	Note: No Available Parts at time of Printing	

FIGURE 6-32. SEAT INSTALLATION (AIR SUSPENSION - STANDARD)

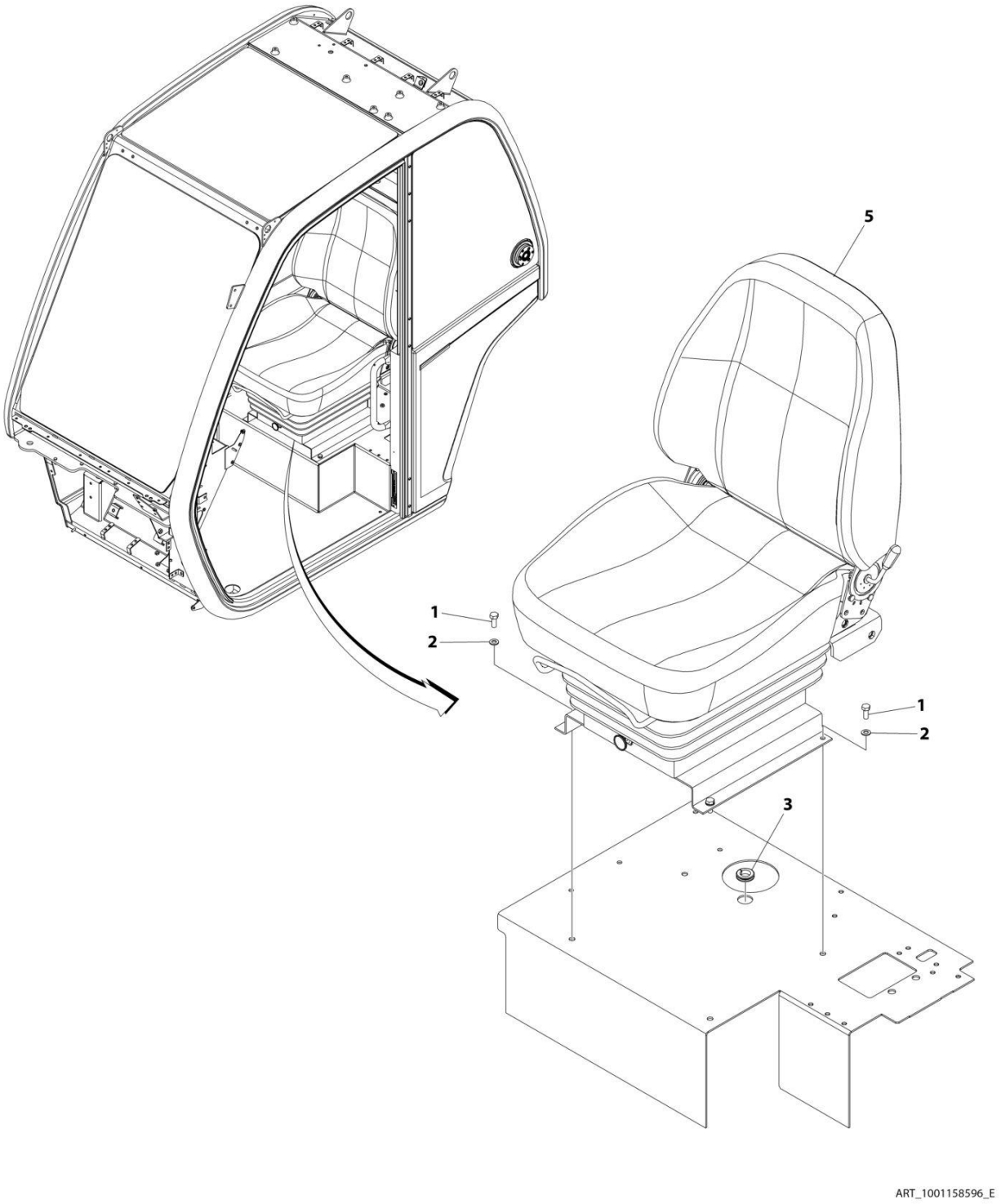

FIGURE 6-32. SEAT INSTALLATION (AIR SUSPENSION - STANDARD)

ITEM	PART NUMBER	QTY	DESCRIPTION	REV
	1001158596	Ref	SEAT INSTALLATION (AIR SUSPENSION - STANDARD)	E
1	0760810	4	Bolt, M8X20	
2	4811900	4	Washer, M8	
3	1001216974	1	Grommet	
5	1001280471	1	Seat Assembly (See Separate Breakdown in this Section)	

FIGURE 6-33. SEAT ASSEMBLY (AIR SUSPENSION - STANDARD)

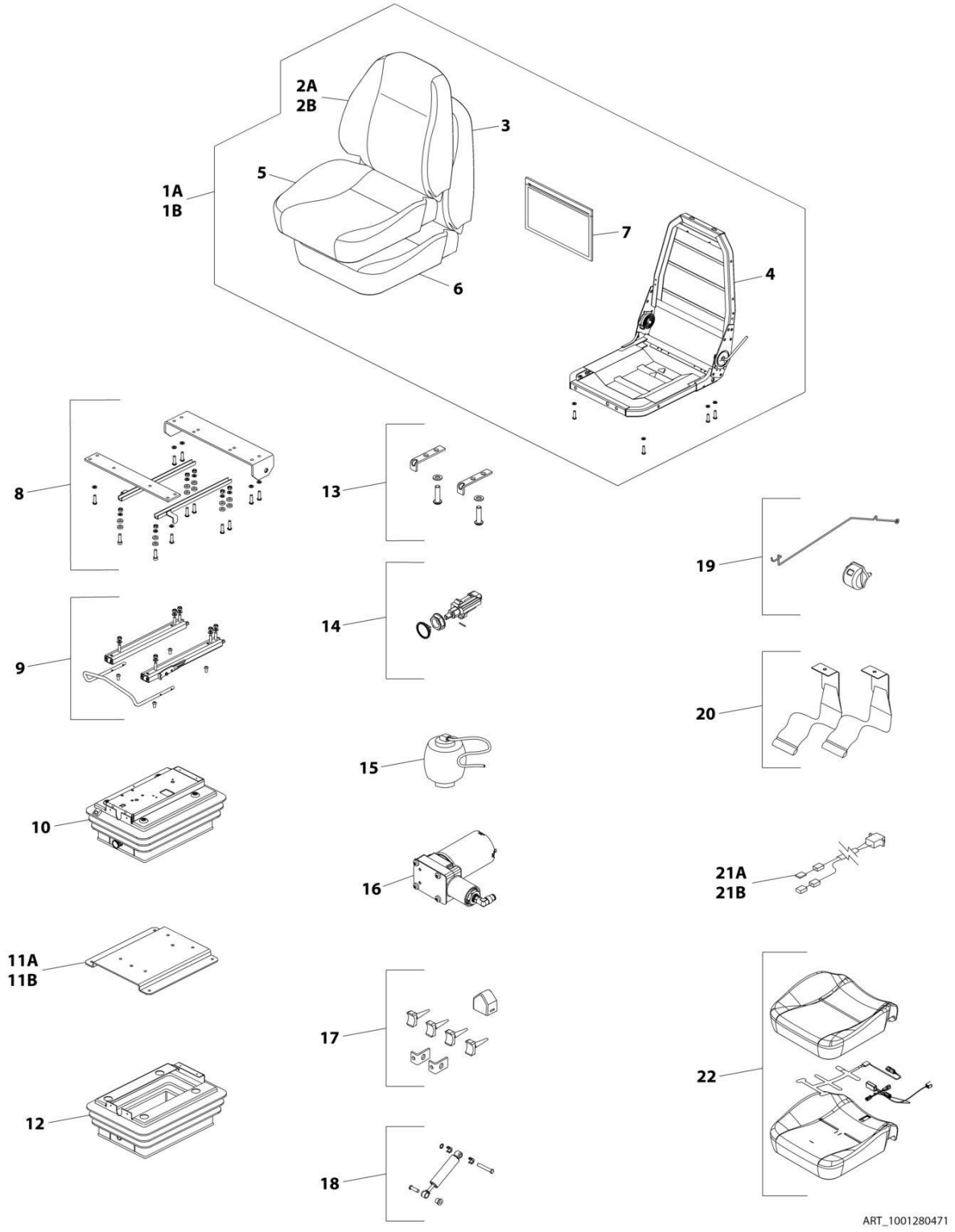

FIGURE 6-33. SEAT ASSEMBLY (AIR SUSPENSION - STANDARD)

ITEM	PART NUMBER	QTY	DESCRIPTION	REV
	1001280471	Ref	SEAT ASSEMBLY (AIR SUSPENSION - STANDARD)	A
1A	70031050	1	Cushion and Frame Assembly (Without Sensor) (Includes Items 2-7)	
1B	70031051	1	Cushion and Frame Assembly (With Sensor) (Includes Items 2-7)	
2A	70027399	1	Fabric, Seat Back (Without Sensor)	
2B	70031052	1	Fabric, Seat Back (With Sensor)	
3	80264002	1	Foam, Seat Back	
4	70021314	1	Frame, Seat Bottom and Back	
5	70027394	1	Fabric, Seat Bottom	
6	80264004	1	Foam, Seat Bottom	
7	70021316	1	Document Bag Kit	
8	70021317	1	Frame Mount Kit	
9	70021318	1	Fore/Aft Side Adjustment Kit	
10	70021319	1	Suspension Kit	
11A	70021320	1	Mounting Plate Kit (16.5mm Height)	
11B	70027395	1	Mounting Plate Kit (44.5mm Height)	
12	70021321	1	Cover, Suspension	
13	70021322	1	Side Rail Stop Kit	
14	70021323	1	Air Valve Kit	
15	70021324	1	Air Spring Kit	
16	70021325	1	Compressor Kit	
17	70021326	1	Limit Switches Kit	
18	70021327	1	Damper Kit	
19	70021328	1	Ride Indicator Kit	
20	70021329	1	Seatbelts Kit	
21A	70021330	1	Seat Adapter Harness (Without Sensor)	
21B	70031053	1	Seat Adapter Harness (With Sensor)	
22	70031054	1	Cover/Foam/Sensor Kit (Includes Items 5 & 6)	

FIGURE 6-34. UPPER SEAT ASSEMBLY

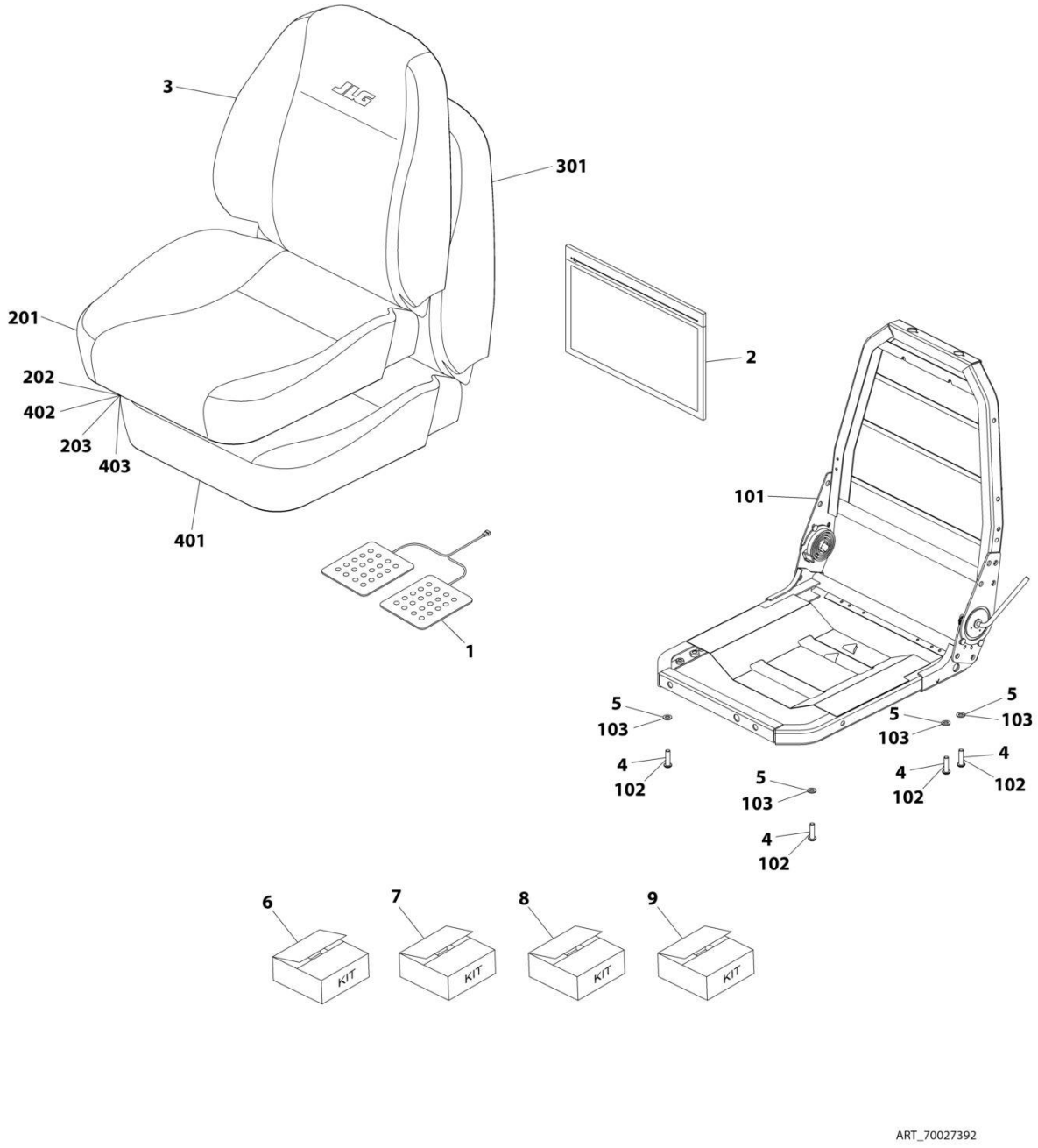

FIGURE 6-34. UPPER SEAT ASSEMBLY

ITEM	PART NUMBER	QTY	DESCRIPTION	REV
	70027392	Ref	Upper Seat Assembly	
1	70025539	1	Pad, Sensor	
2	70021316	1	Bag	
3	70027393	1	Cover, Back	
4	N.S.S.	4	Bolt, M8X25	
5	N.S.S.	4	Washer	
6	70021314	1	Kit, Frame (includes items 101 thru 103)	
7	70027394	1	Kit, Bottom Seat Cover (includes items 201 thru 203)	
8	80264002	1	Kit, Back Foam (includes items 301 thru 303)	
9	80264004	1	Kit, Seat Foam (includes items 401 thru 403)	
101	N.S.S.	1	Frame, Seat	
102	N.S.S.	4	Bolt, M8X25	
103	N.S.S.	4	Washer	
201	N.S.S.	1	Cover, Seat	
202	N.S.S.	2	Clip	
203	N.S.S.	17	Clip	
301	N.S.S.	1	Foam, Back	
302	N.S.S.	3	Bar, Trim	
303	N.S.S.	4	Ring	
401	N.S.S.	1	Foam, Seat	
402	N.S.S.	2	Clip	
403	N.S.S.	17	Clip	

FIGURE 6-35. SUSPENSION KIT

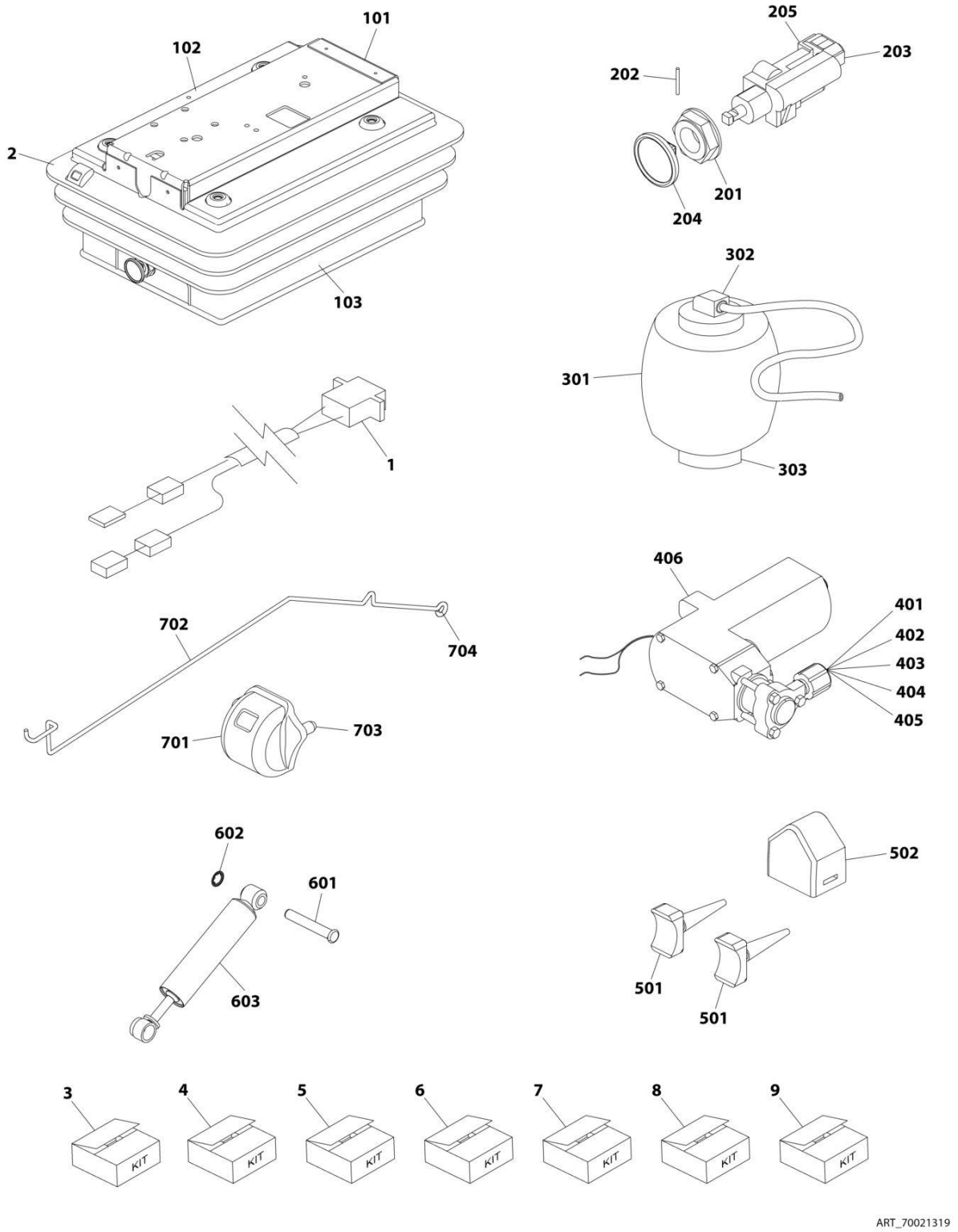

FIGURE 6-35. SUSPENSION KIT

ITEM	PART NUMBER	QTY	DESCRIPTION	REV
	70021319	Ref	Suspension Kit	
1	70021330	1	Lead, Fly	
2	N.S.S.	1	Suspension	
3	70021321	1	Kit, Suspension Cover (includes items 101 thru 103)	
4	70021323	1	Kit, Air Valve (includes items 201 thru 205)	
5	70021324	1	Kit, Air Spring (includes items 301 thru 303)	
6	70021325	1	Kit, Compressor (includes items 401 thru 406)	
7	70021326	1	Kit, Upstop/Bumpstop (includes items 501 & 502)	
8	70021327	1	Kit, Damper (includes items 601 thru 603)	
9	70021328	1	Kit, Ride Indicator (includes items 701 thru 704)	
101	N.S.S.	6	Clip, Cover	
102	N.S.S.	1	Cover, Suspension	
103	N.S.S.	5	Clip, Cover	
201	N.S.S.	1	Nut, Air Valve	
202	N.S.S.	1	Pin, Retaining	
203	N.S.S.	1	Valve, Combination	
204	N.S.S.	1	Knob	
205	N.S.S.	2	Tie, Plastic	
301	N.S.S.	1	Spring, Air	
302	N.S.S.	1	Clip	
303	N.S.S.	1	Screw, Countersunk Self Tapping	
401	N.S.S.	1	Clip	
402	N.S.S.	1	Pad	
403	N.S.S.	1	Loom	
404	N.S.S.	2	Tie, Cable	
405	N.S.S.	3	Tie, Plastic	
406	N.S.S.	1	Compressor (with Elbow)	
501	N.S.S.	2	Upstop	
502	N.S.S.	1	Bumpstop	
601	N.S.S.	2	Pin	
602	N.S.S.	2	Washer, Starlock	
603	N.S.S.	1	Damper	
701	N.S.S.	1	Indicator, Ride	
702	N.S.S.	1	Wire, Ride Indicator	
703	N.S.S.	2	Washer, Starlock	
704	N.S.S.	1	Washer, Grip M4	

FIGURE 6-36. SEAT INSTALLATION (AIR SUSPENSION - PREMIUM)

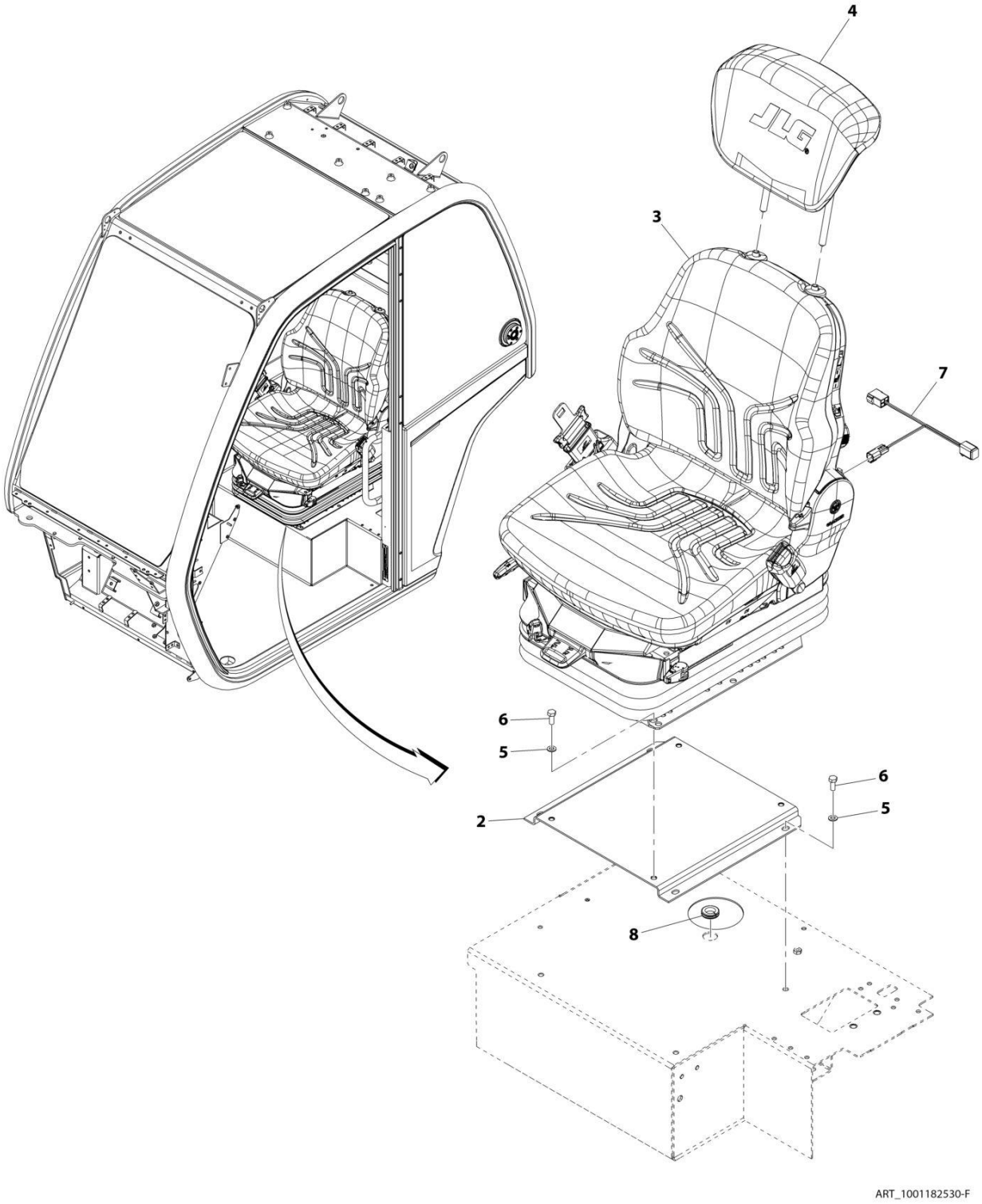

FIGURE 6-36. SEAT INSTALLATION (AIR SUSPENSION - PREMIUM)

ITEM	PART NUMBER	QTY	DESCRIPTION	REV
	1001182530	Ref	Seat Installation (Air Suspension - Premium)	F
2	1001158736C	1	Plinth, Seat	
3	1001169135	1	Assembly, Seat (See Separate Breakdown in this Section)	
4	1001182529	1	Headrest	
5	4811900	8	Washer, M8	
6	0760810	8	Bolt, M8X20	
7	1001168531	1	Harness, Seat Adaptor (See Separate Breakdown in ELECTRICAL Section)	
8	1001216974	1	Grommet	

FIGURE 6-37. SEAT INSTALLATION (CLOTH) (SEAOP)

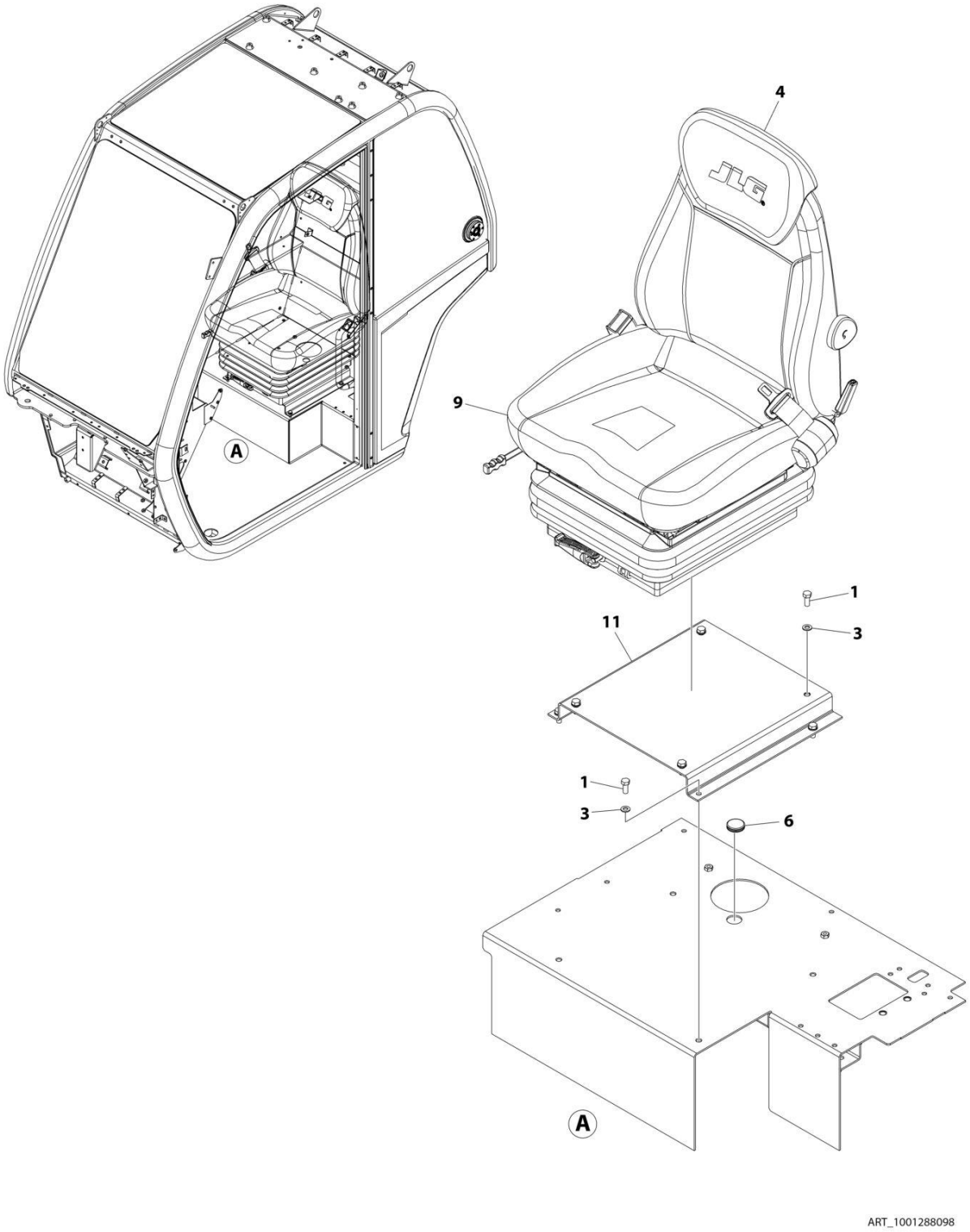

FIGURE 6-37. SEAT INSTALLATION (CLOTH) (SEAOP)

ITEM	PART NUMBER	QTY	DESCRIPTION	REV
	1001288098	Ref	SEAT INSTALLATION (CLOTH) (SEAOP)	A
1	0760810	8	Bolt M8 x 20	
3	4811900	8	Washer M8	
4	1001119467	1	Headrest, Cloth	
6	1001196076	1	Cap	
7	1001266488	1	Lamp, LED (Red) (Not Shown)	
8	1001268744	1	Seat Belt Alarm Harness (See Separate Breakdown in ELECTICAL Section) (Not Shown)	
9	1001288070	1	Seat Assembly (See Separate Breakdown in this Section)	
11	1001158738C	1	Plinth, Seat	

FIGURE 6-38. SEAT ASSEMBLY (AIR SUSPENSION - PREMIUM)

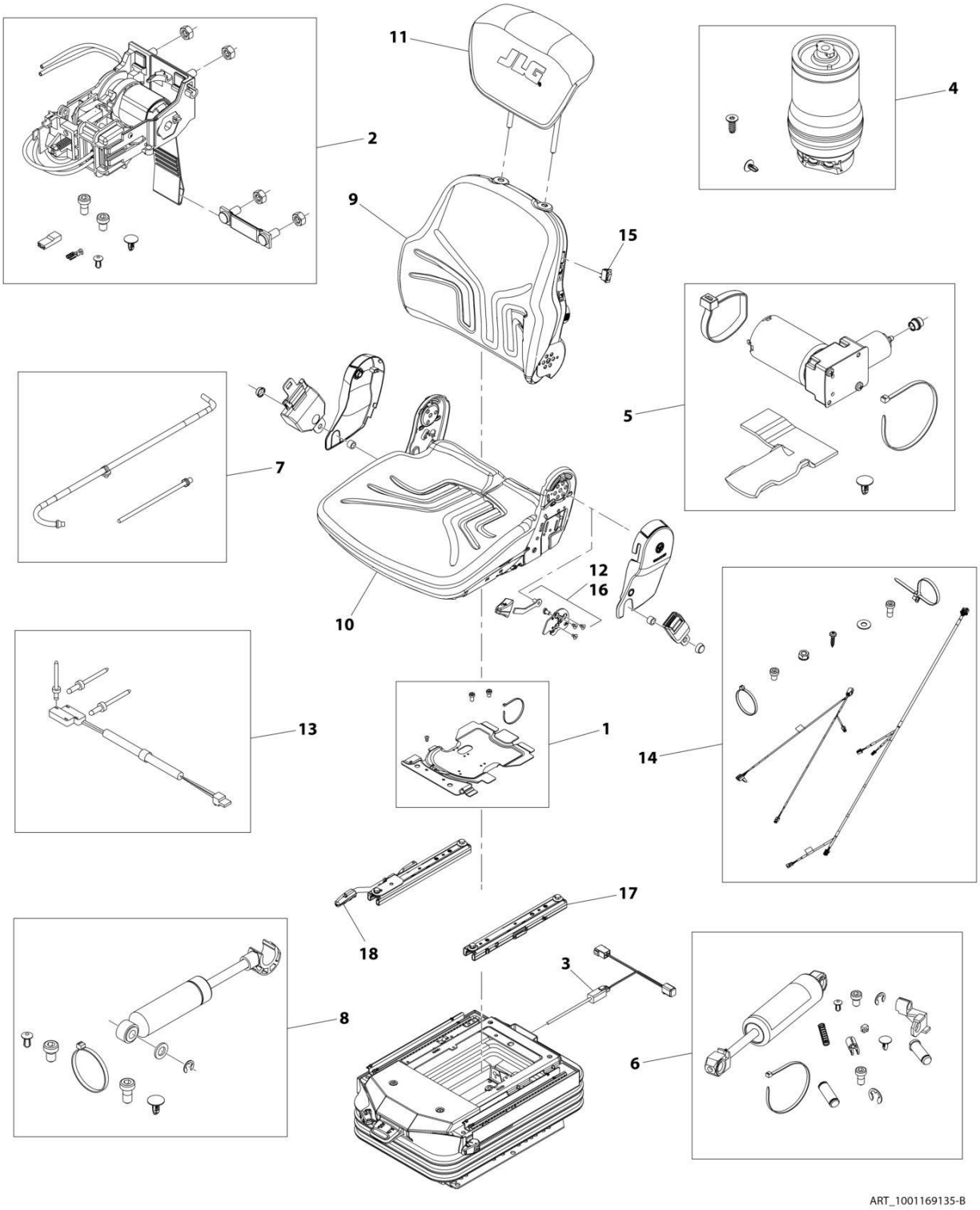

FIGURE 6-38. SEAT ASSEMBLY (AIR SUSPENSION - PREMIUM)

ITEM	PART NUMBER	QTY	DESCRIPTION	REV
	1001169135	Ref	Seat Assembly (Air Suspension - Premium)	B
1	70024856	1	Cover	
2	70023182	1	Control Level Kit	
3	70023186	1	Wiring Harness, Air/Safeswitch	
4	70023184	1	Air Spring Kit	
5	70024857	1	Compressor, 12V	
6	70023181	1	Shock Absorber Kit	
7	70024459	1	Air Tubes Kit	
8	70023189	2	Shock Absorber Kit	
9	70023179	1	Back Cushion Kit	
10	70024858	1	Seat Cushion Kit	
11	1001182529	1	Headrest, Cloth	
12	70024859	1	Backrest Actuator	
13	70028326	1	Switch	
14	70024861	1	Wiring Harness	
15	70024107	1	Switch, Heater	
16	7028621	1	Handle, Backrest Angle Adjust	
17	3986643	1	Adjust Slide Kit	
18	3986610	1	Handle	

FIGURE 6-39. HEATER INSTALLATION

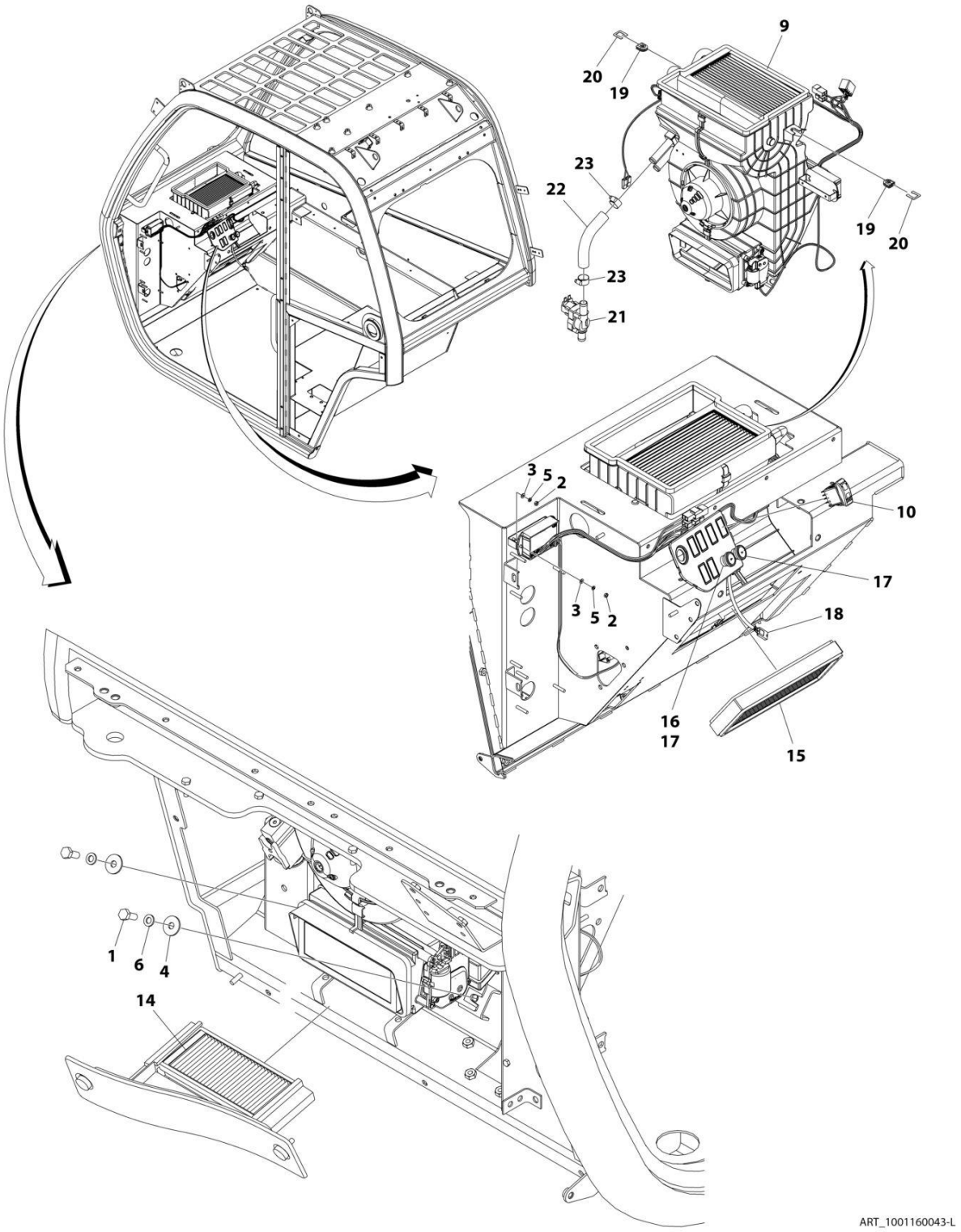

FIGURE 6-39. HEATER INSTALLATION

ITEM	PART NUMBER	QTY	DESCRIPTION	REV
	1001160043	Ref	HEATER INSTALLATION	L
1	0760810	2	Bolt M8 x 20	
2	3290401	4	Nut M4	
3	4811400	4	Washer M4	
4	4811902	2	Washer M8	
5	4831400	4	Washer M4	
6	4831900	2	Washer M8	
9	1001268827	1	Assembly, Heater (See Separate Breakdown in this Section)	
10	1001159925	1	Switch, HVAC Recycle	
14	1001218996	1	Filter, HVAC Air	
15	1001172553	1	Filter, HVAC Recirculation Air	
16	1001172547	1	Switch, HVAC Rotary 3 Speed	
17	1001172550	2	Knob, HVAC Control	
18	1001270976	1	Cable, HVAC	
19	1001188590	2	Grommet	
20	1001218542	2	Shim	
21	1001221059	1	Valve, Water	
22	1001221295	1	House	
23	8410009	2	Clamp	

FIGURE 6-40. HEATER AND A/C INSTALLATION (CAB PARTS)

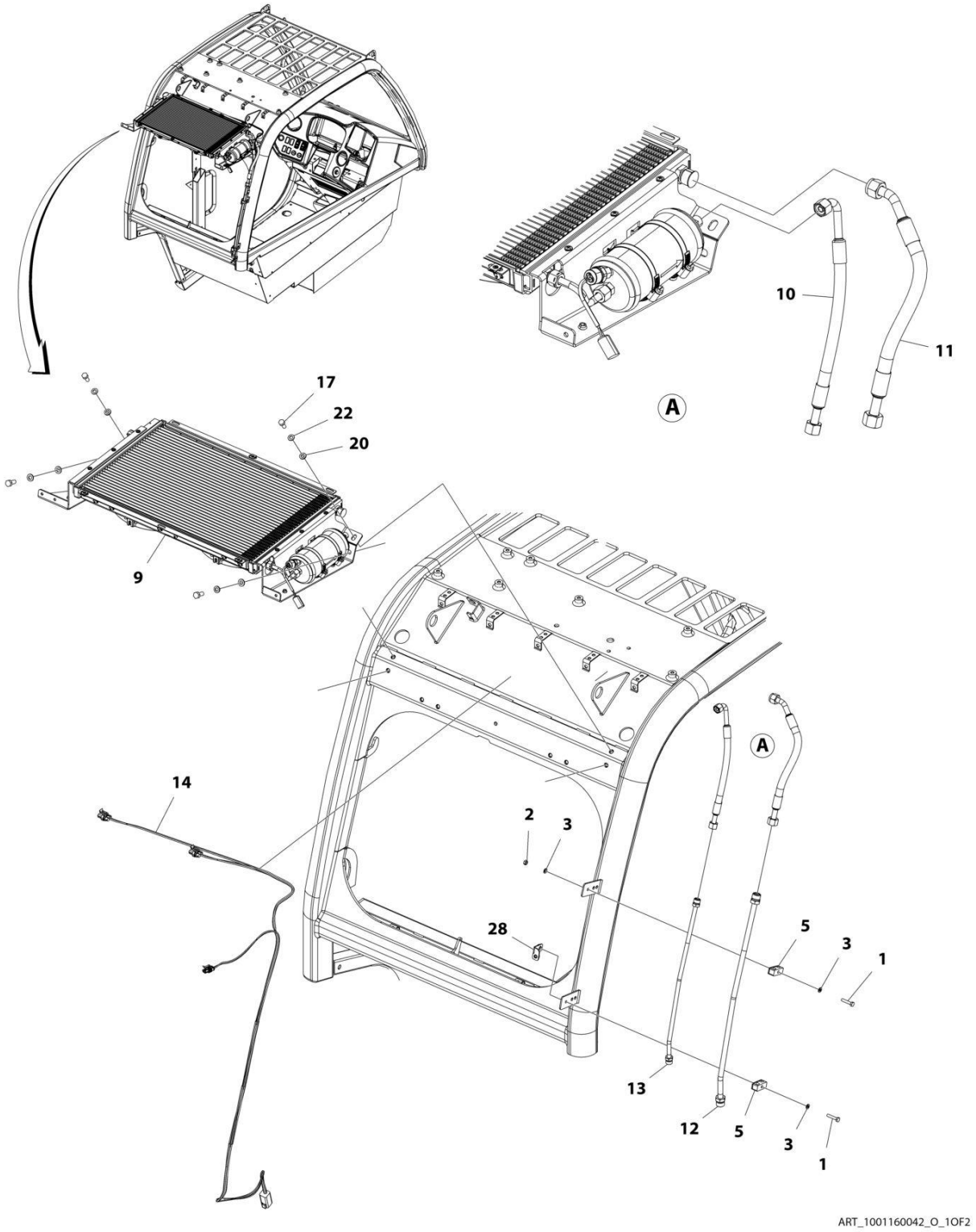

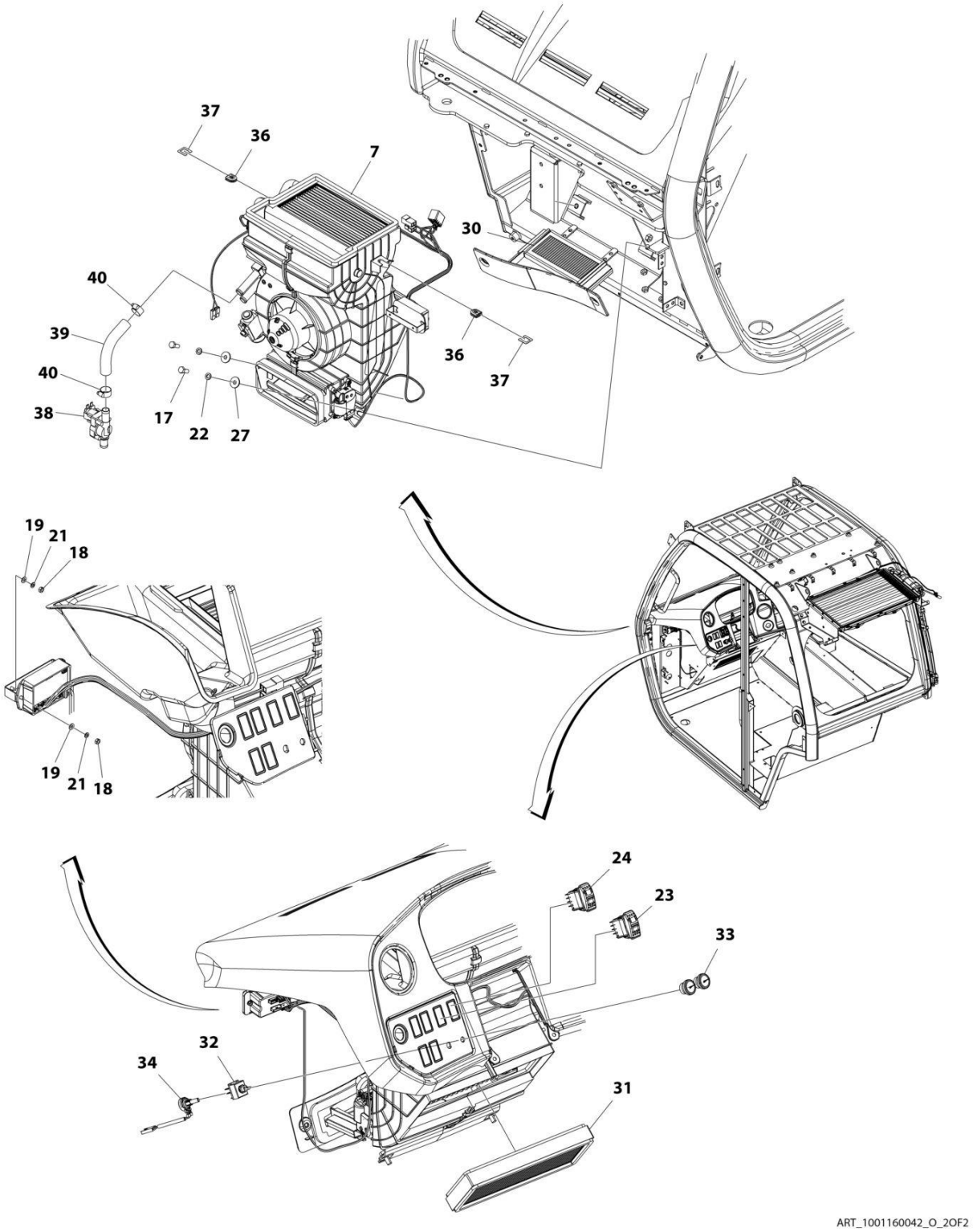
37
36
7
30
40
39
40
38
17
22
27
36
37
19
21
18
19
21
18
24
23
33
32
34
31
ART_1001160042_O_2OF2

FIGURE 6-40. HEATER AND A/C INSTALLATION (CAB PARTS)

ITEM	PART NUMBER	QTY	DESCRIPTION	REV
	1001160042	Ref	HEATER AND A/C INSTALLATION (CAB PARTS)	O
1	0700614	2	Bolt M6 x 30	
2	3290601	1	Nut M6	
3	4811700	3	Washer M6	
5	1001145539	2	Support, Pipe	
7	1001268831	1	Assembly, Heater and A/C (See Separate Breakdown in this Section)	
9	1001162953	1	Assembly, Cab Condenser (See Separate Breakdown in this Section)	
10	1001168327	1	Hose	
11	1001168330	1	Hose	
12	1001168331	1	Tube	
13	1001168456	1	Tube	
14	1001169151	1	Harness, A/C Option (See Separate Breakdown in ELECTRICAL Section)	
17	0760810	6	Bolt M8 x 20 GR8.8	
18	3290401	4	Nut M4	
19	4811400	4	Washer M4	
20	4811900	4	Washer M8	
21	4831400	4	Washer M4	
22	4831900	6	Washer M8	
23	1001159925	1	Switch, HVAC Recycle	
24	1001160326	1	Switch, HVAC On/Off	
27	4811902	2	Washer M8	
28	1001178170	1	Bracket	
30	1001218996	1	Filter, HVAC Fresh Air	
31	1001172553	1	Filter, HVAC Air Recirculation	
32	1001172547	1	Switch, HVAC Rotary 3 Speed	
33	1001172550	2	Knob, HVAC Control	
34	1001270976	1	Cable, HVAC	
35	1320022	1	Clamp	
36	1001188590	2	Grommet	
37	1001218542	2	Shim	
38	1001221059	1	Valve, Water	
39	1001221295	1	Hose	
40	8410009	2	Clamp	

FIGURE 6-41. CAB CONDENSER ASSEMBLY

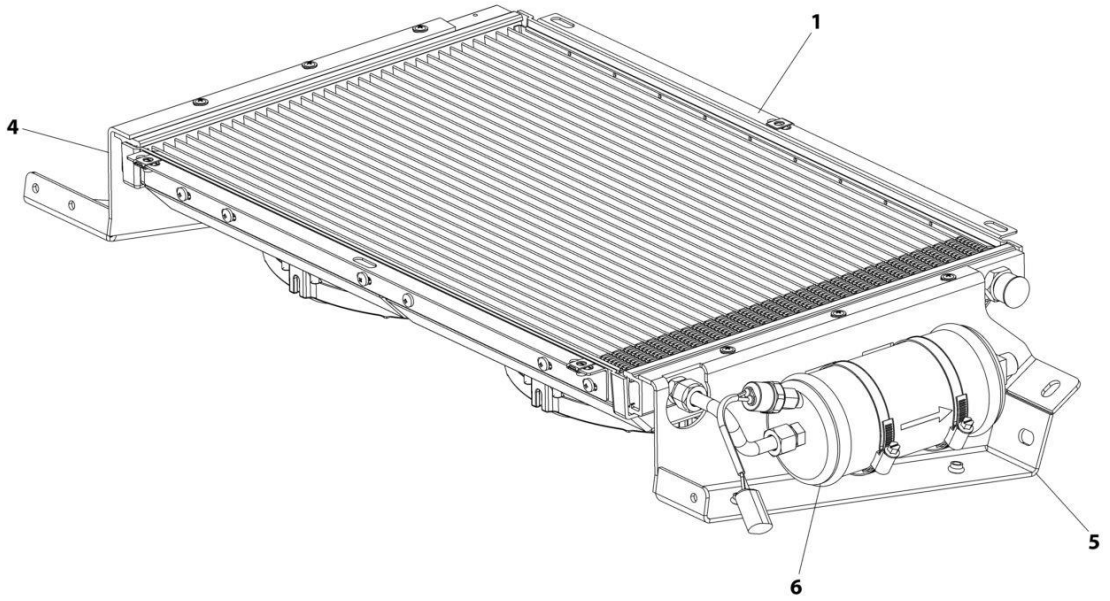

ART_1001162953

FIGURE 6-41. CAB CONDENSER ASSEMBLY

ITEM	PART NUMBER	QTY	DESCRIPTION	REV
	1001162953	Ref	Cab Condenser Assembly	G
1	1001167266	1	Condenser (See Separate Breakdown in this Section)	
4	1001179080	1	Bracket	
5	1001179081	1	Bracket	
6	1001179130	1	Drier, A/C Receiver (See Separate Breakdown in this Section)	

FIGURE 6-42. CONDENSER

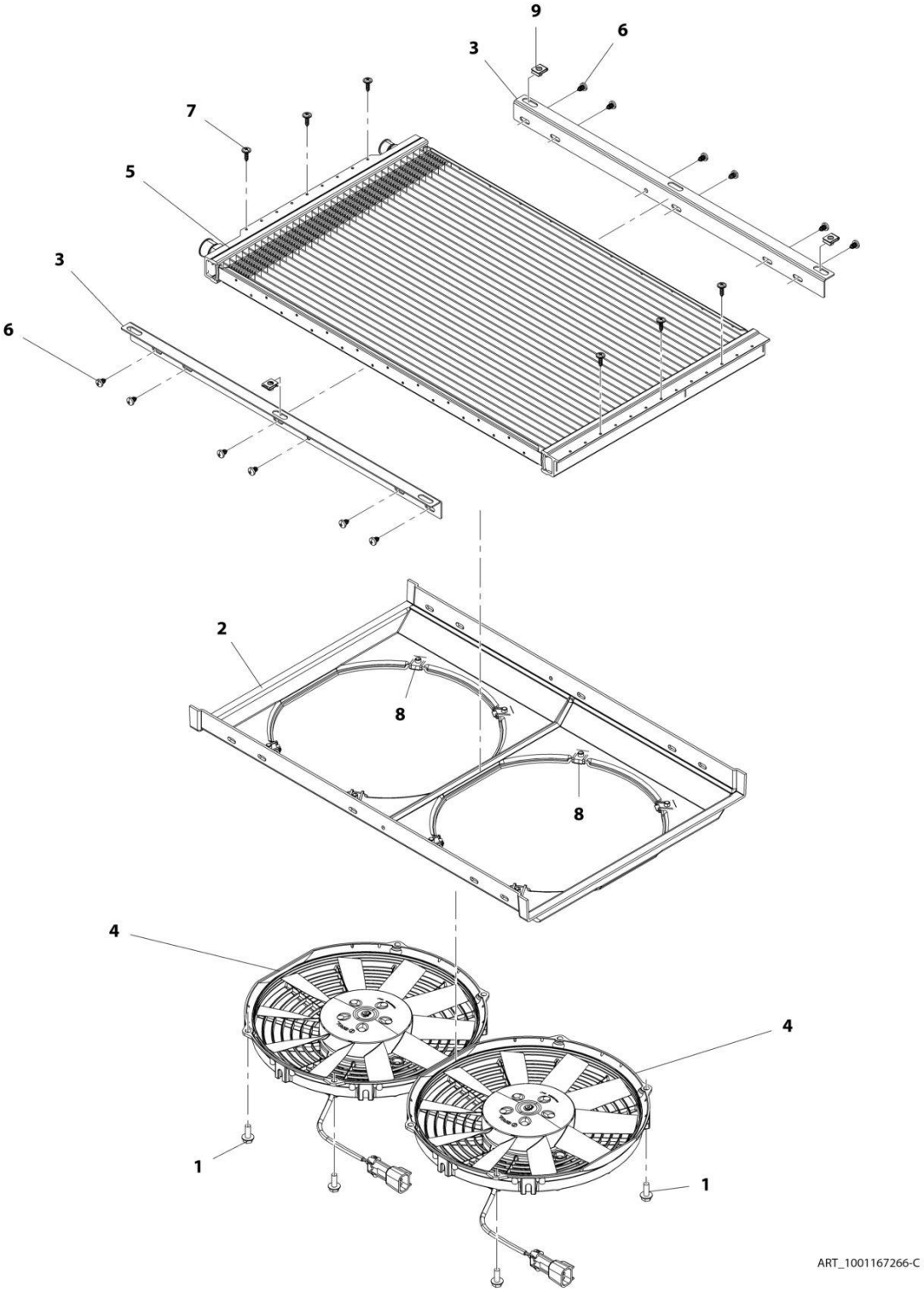

FIGURE 6-42. CONDENSER

ITEM	PART NUMBER	QTY	DESCRIPTION	REV
	1001167266	Ref	Condenser	C
1	5250608	8	Bolt, M6X16	
2	1001195342	1	Bracket, Condenser Fan Mount	
3	1001195343	2	Support, Condenser	
4	1001195345	2	Fan, Condenser	
5	1001195346	1	Condenser	
6	1001195385	12	Screw, M3.9X9.5	
7	1001195386	6	Screw, M4.2X16	
8	1001195437	8	Clip, M6X1	
9	1001195438	3	Clip, M6X1	

FIGURE 6-43. A/C RECEIVER DRIER

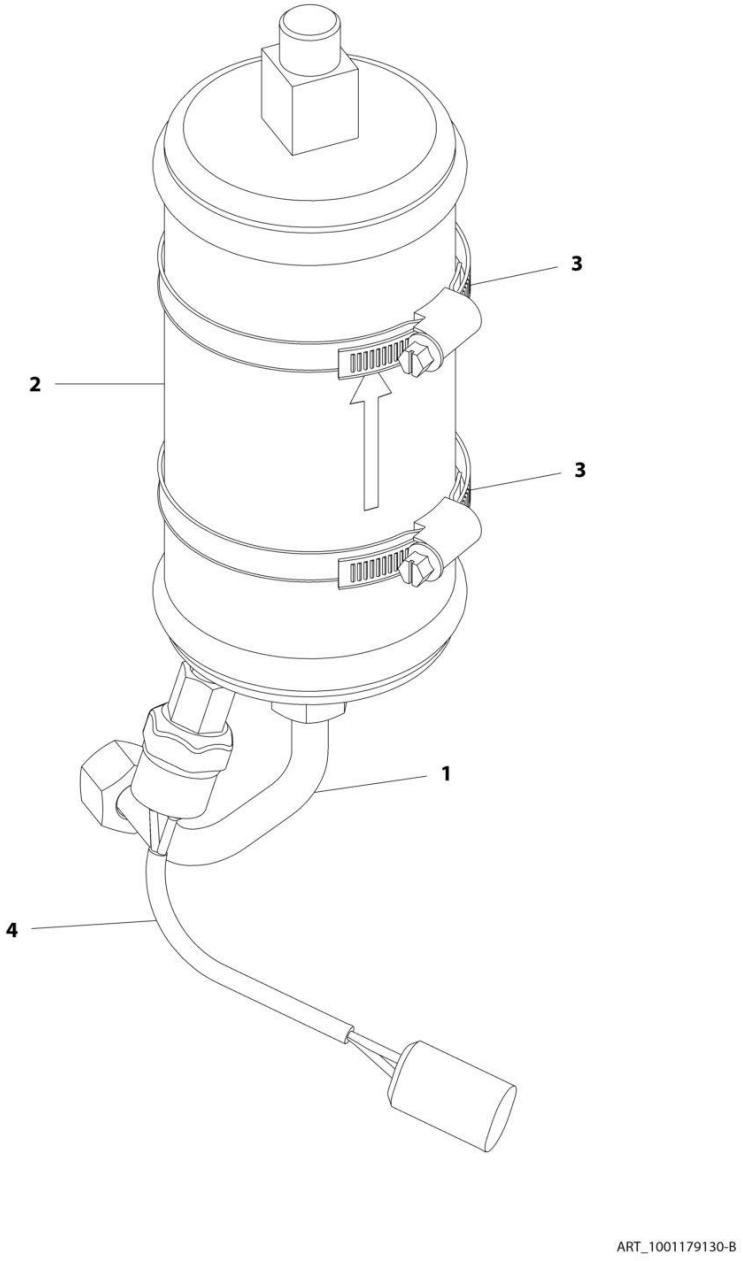

FIGURE 6-43. A/C RECEIVER DRIER

ITEM	PART NUMBER	QTY	DESCRIPTION	REV
	1001179130	Ref	A/C Receiver Drier	B
1	1001184403	1	Tube, Heater	
2	1001184404	1	Receiver, Heater Drier	
3	1001184405	2	Clamp	
4	1001184406	1	Connector, Heater	

FIGURE 6-44. HEATER ASSEMBLY

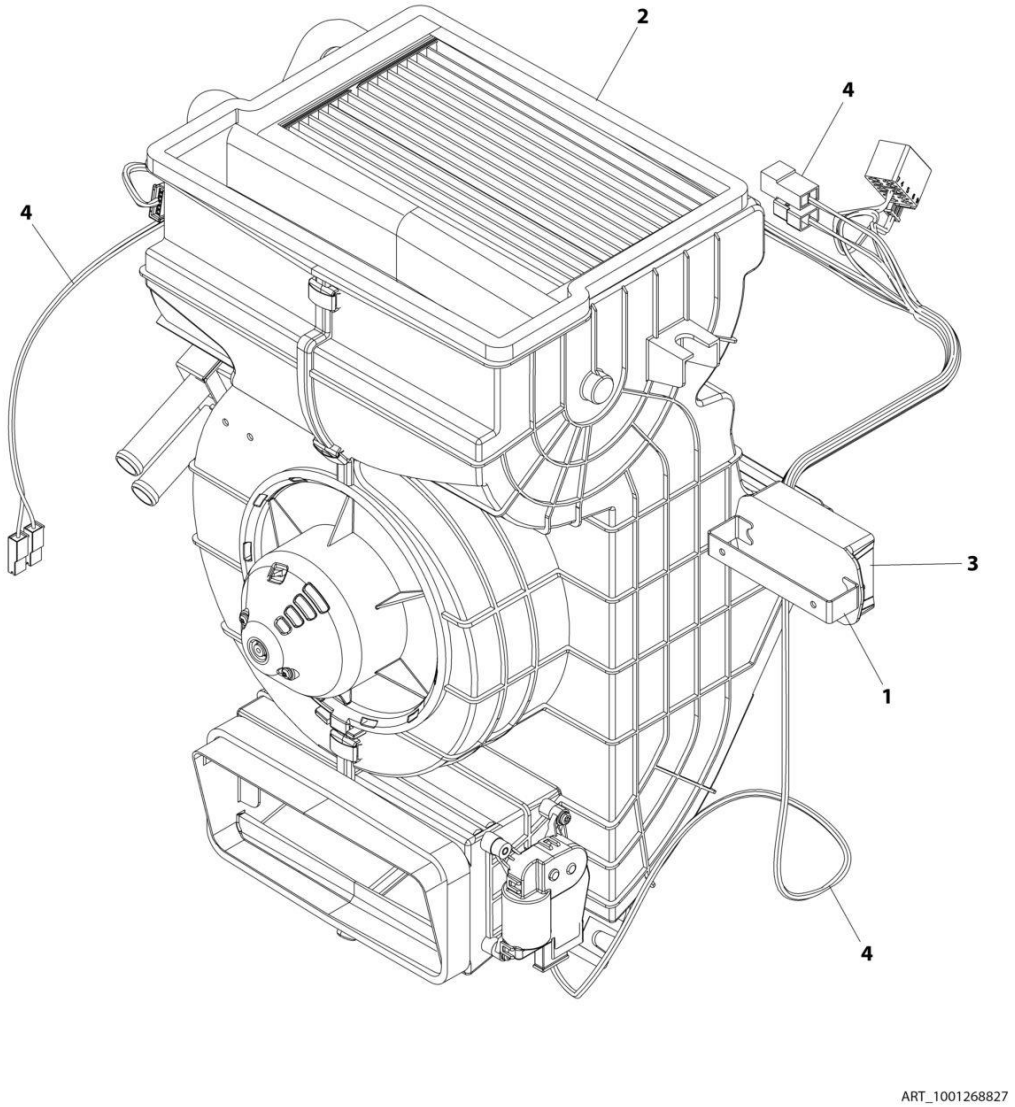

FIGURE 6-44. HEATER ASSEMBLY

ITEM	PART NUMBER	QTY	DESCRIPTION	REV
	1001268827	Ref	HEATER ASSEMBLY	B
1	1001264976	1	Bracket	
2	1001268828	1	Heater, Cab (See Separate Breakdown in this Section)	
3	1001268829	1	Actuator, HVAC Cab	
4	1001268830	1	Harness, HVAC Actuator (See Separate Breakdown in ELECTRICAL Section)	

FIGURE 6-45. HEATER AND A/C ASSEMBLY

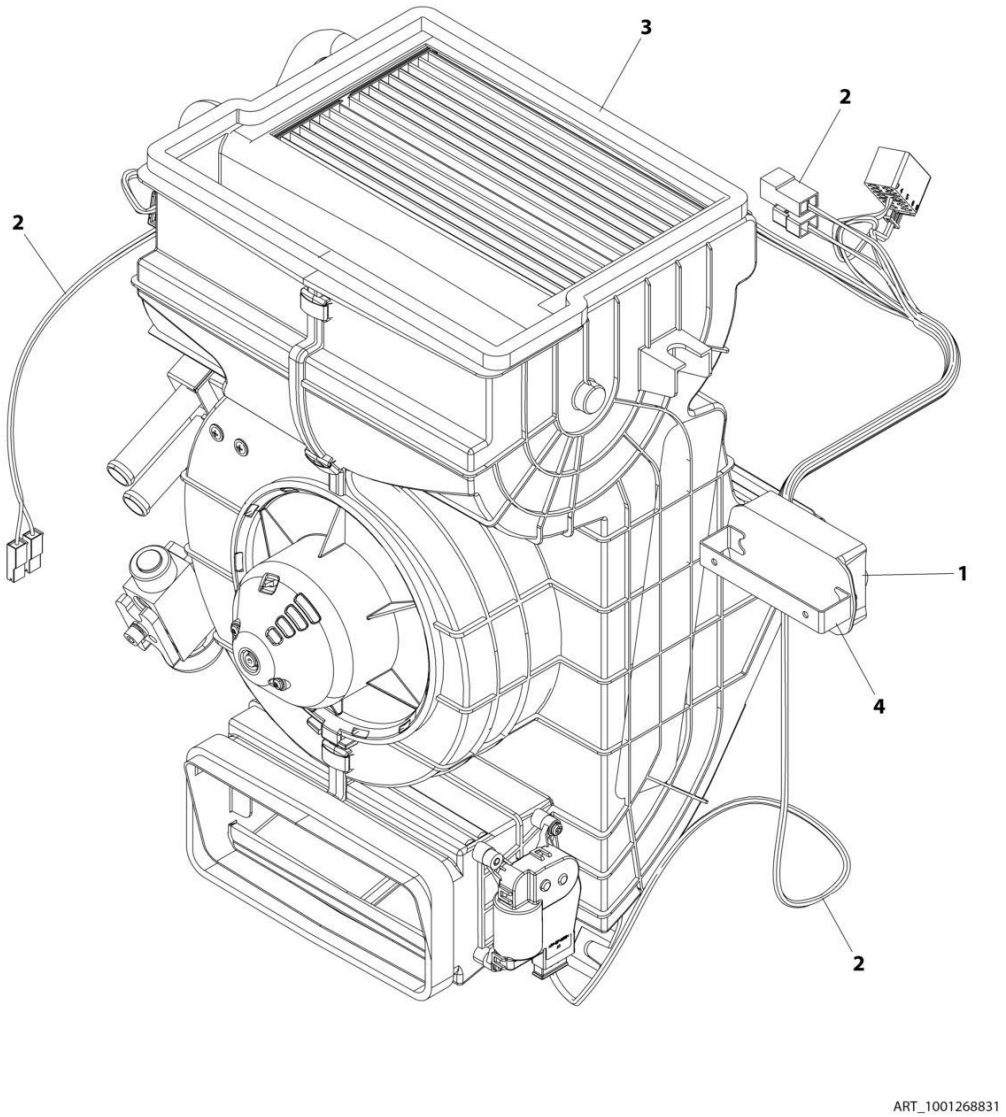

FIGURE 6-45. HEATER AND A/C ASSEMBLY

ITEM	PART NUMBER	QTY	DESCRIPTION	REV
	1001268831	Ref	HEATER AND A/C ASSEMBLY	B
1	1001268829	1	Actuator, HVAC Cab	
2	1001268830	1	Harness, HVAC Actuator (See Separate Breakdown in this Section)	
3	1001268832	1	Heater and A/C (See Separate Breakdown in this Section)	
4	1001264976	1	Bracket	

FIGURE 6-46. HEATER

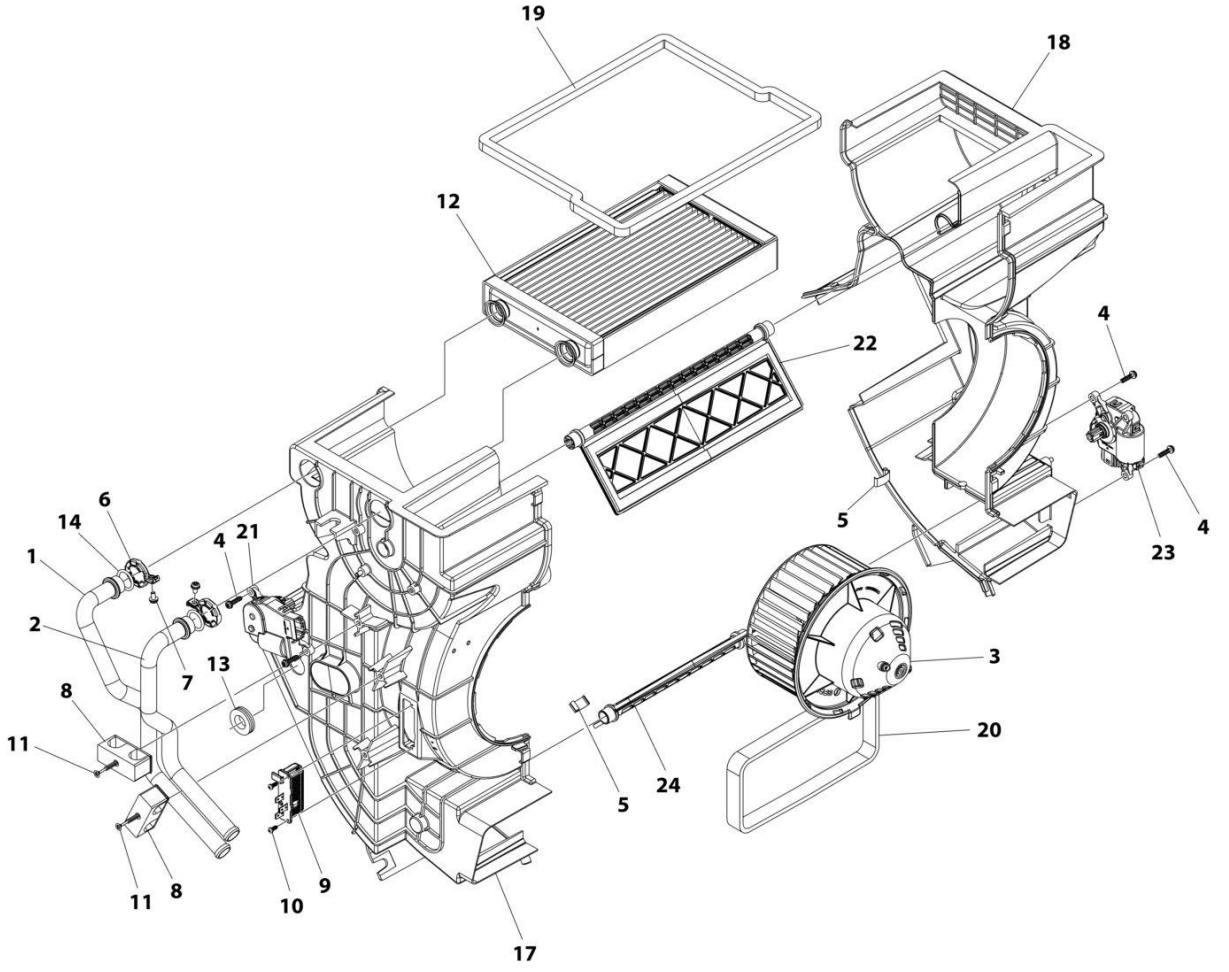

FIGURE 6-46. HEATER

ITEM	PART NUMBER	QTY	DESCRIPTION	REV
	1001268828	Ref	HEATER	B
1	1001184296	1	Pipe, Water	
2	1001184297	1	Pipe, Water	
3	1001188594	1	Fan, 12V	
4	1001188602	4	Screw	
5	1001188603	9	Clamp	
6	1001188604	2	Clamp	
7	1001188610	2	Screw	
8	1001188612	2	Clamp	
9	1001188614	1	Resistor	
10	1001188720	2	Screw	
11	1001188725	2	Screw	
12	1001188729	1	Radiator, Heater Core	
13	1001188733	1	Grommet	
14	1001189025	2	O-Ring	
17	1001269555	1	Housing, RH	
18	1001269556	1	Housing, LH	
19	1001269558	1	Foam, Air Outlet	
20	1001269559	1	Foam, Air Inlet	
21	1001269560	1	Actuator, Fresh/Recirculation Air	
22	1001269561	1	Flap, Mixing	
23	1001269563	1	Actuator, Fresh/Recirculation Air	
24	1001269564	1	Flap, HVAC Fresh	

FIGURE 6-47. HEATER AND A/C ASSEMBLY

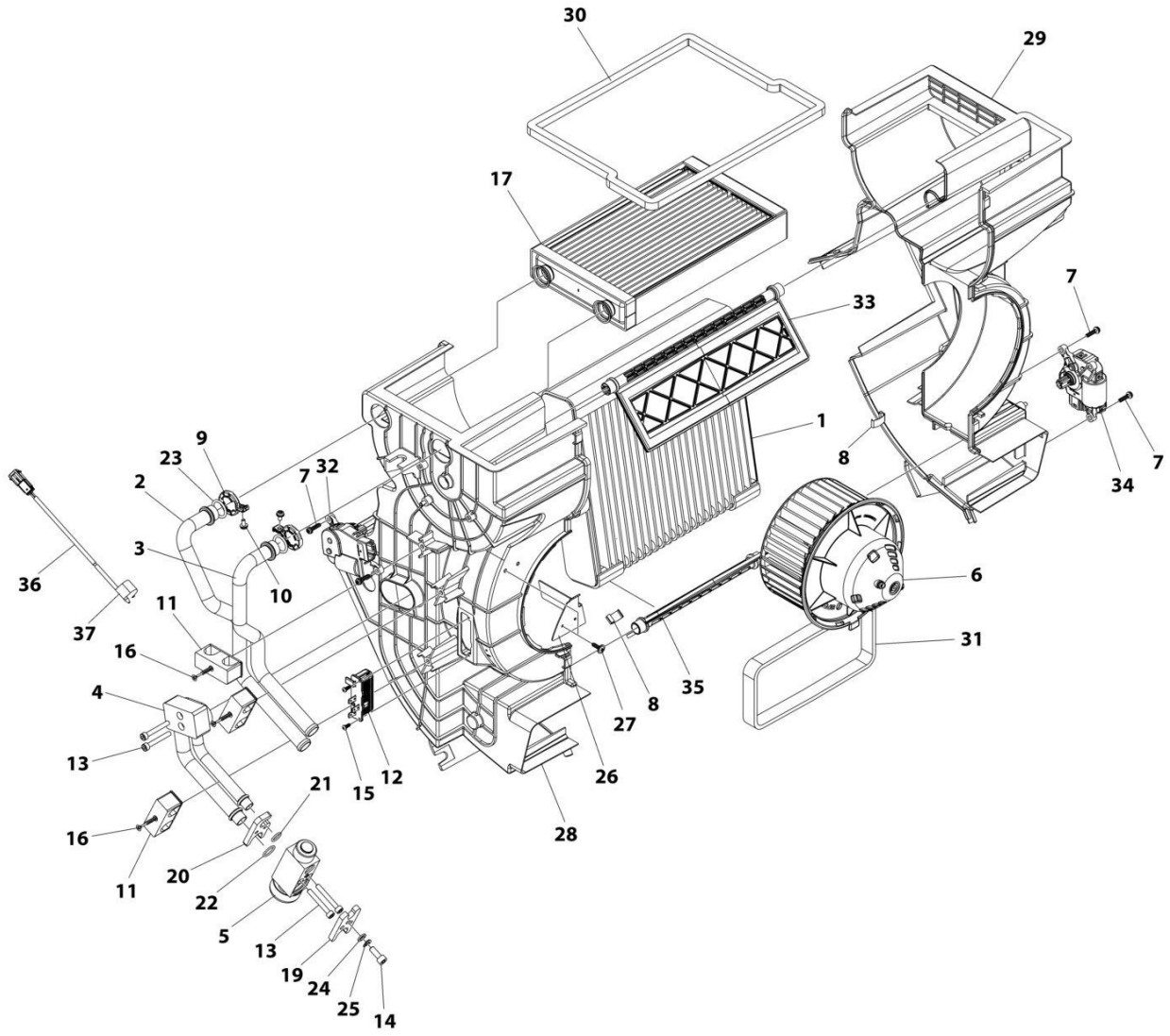

FIGURE 6-47. HEATER AND A/C ASSEMBLY

ITEM	PART NUMBER	QTY	DESCRIPTION	REV
	1001268832	Ref	HEATER AND A/C	B
1	1001184280	1	Evaporator, Heater	
2	1001184296	1	Pipe, Heater Water	
3	1001184297	1	Pipe, Heater Water	
4	1001184427	1	Pipe, Heater	
5	1001188592	1	Valve, HVAC Expansion	
6	1001188594	1	Fan, HVAC Centrifugal 12V	
7	1001188602	4	Screw M4	
8	1001188603	9	Clamp, HVAC Case	
9	1001188604	2	Clamp, HVAC Pipe	
10	1001188610	2	Screw M4	
11	1001188612	3	Clamp, Pipe	
12	1001188614	1	Resistor	
13	1001188618	4	Screw M5	
14	1001188619	1	Screw M6	
15	1001188720	2	Screw M2.9 x 9.5	
16	1001188725	3	Screw M4 x 35	
17	1001188729	1	Radiator, Heater Core	
19	1001188817	1	Clamp, Hose	
20	1001188818	1	Clamp, HVAC EVAP/Valve	
21	1001189023	1	O-Ring	
22	1001189024	1	O-Ring	
23	1001189025	2	O-Ring	
24	1001189048	1	Washer	
25	1001189054	1	Washer, Spring	
26	1001221057	1	Plate	
27	1001221058	2	Screw	
28	1001269555	1	Housing, HVAC RH	
29	1001269556	1	Housing, HVAC LH	
30	1001269558	1	Seal, Heater Outlet Foam	
31	1001269559	1	Seal, Air Inlet Foam	
32	1001269560	1	Actuator, Hot/Cold Mixing	
33	1001269561	1	Foam, Heater Mixing Flap	
34	1001269563	1	Actuator, Fresh/Recirculation Air	
35	1001269564	1	Foam, Heater Mixing Flap	
36	1001269578	1	Temperature Sensor	
37	1001269579	1	Clamp, Temperature Sensor	

FIGURE 6-48. ROOF WIPER INSTALLATION

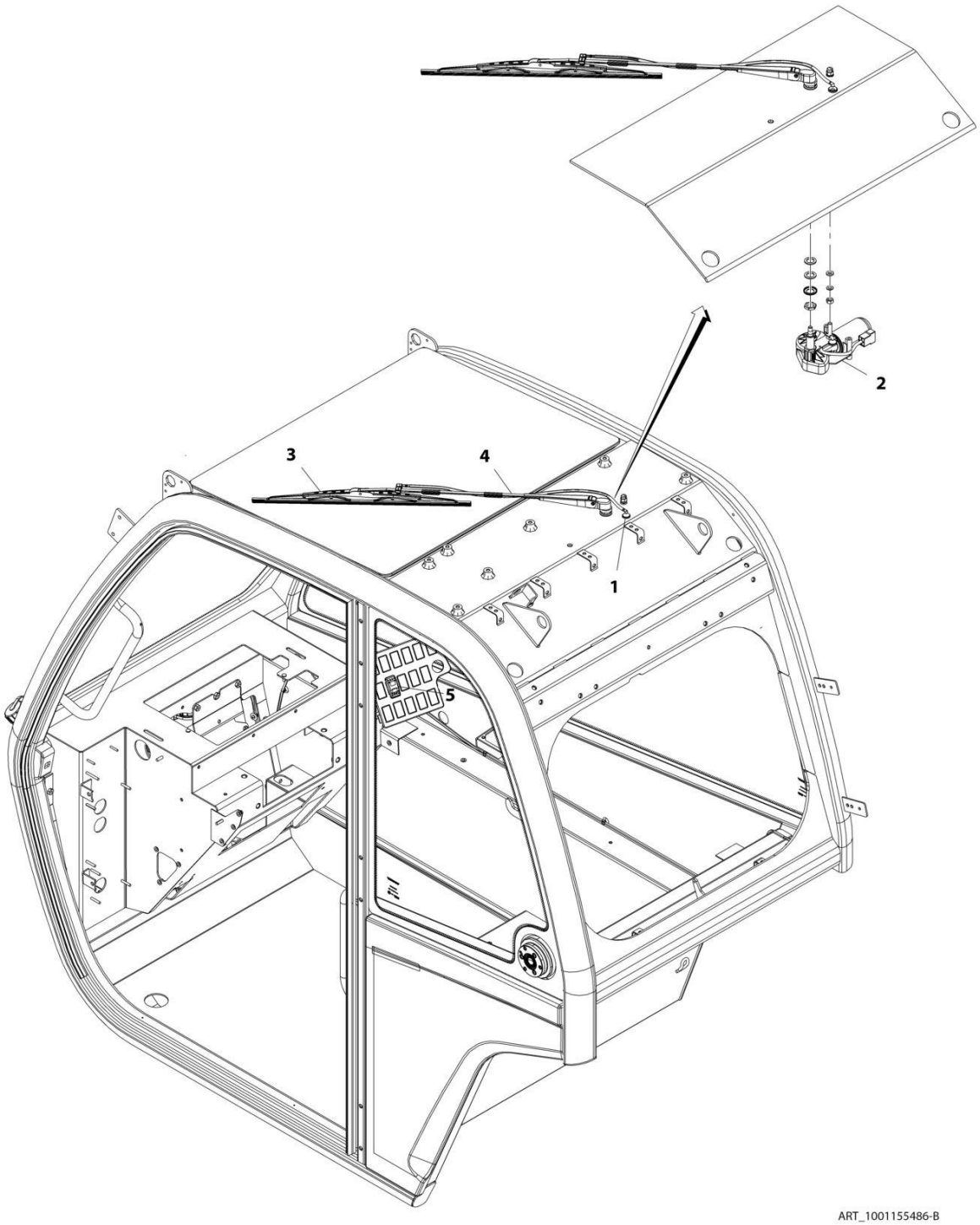

FIGURE 6-48. ROOF WIPER INSTALLATION

ITEM	PART NUMBER	QTY	DESCRIPTION	REV
	1001155486	Ref	Roof Wiper Installation	B
1	1001090343	1	Connector	
2	1001139551	1	Motor, Roof Wiper	
3	1001141313	1	Blade, Roof Wiper	
4	1001141311	1	Arm, Roof Wiper Blade	
5	1001159736	1	Switch, Roof Wiper	

FIGURE 6-49. HEADLINER INSTALLATION

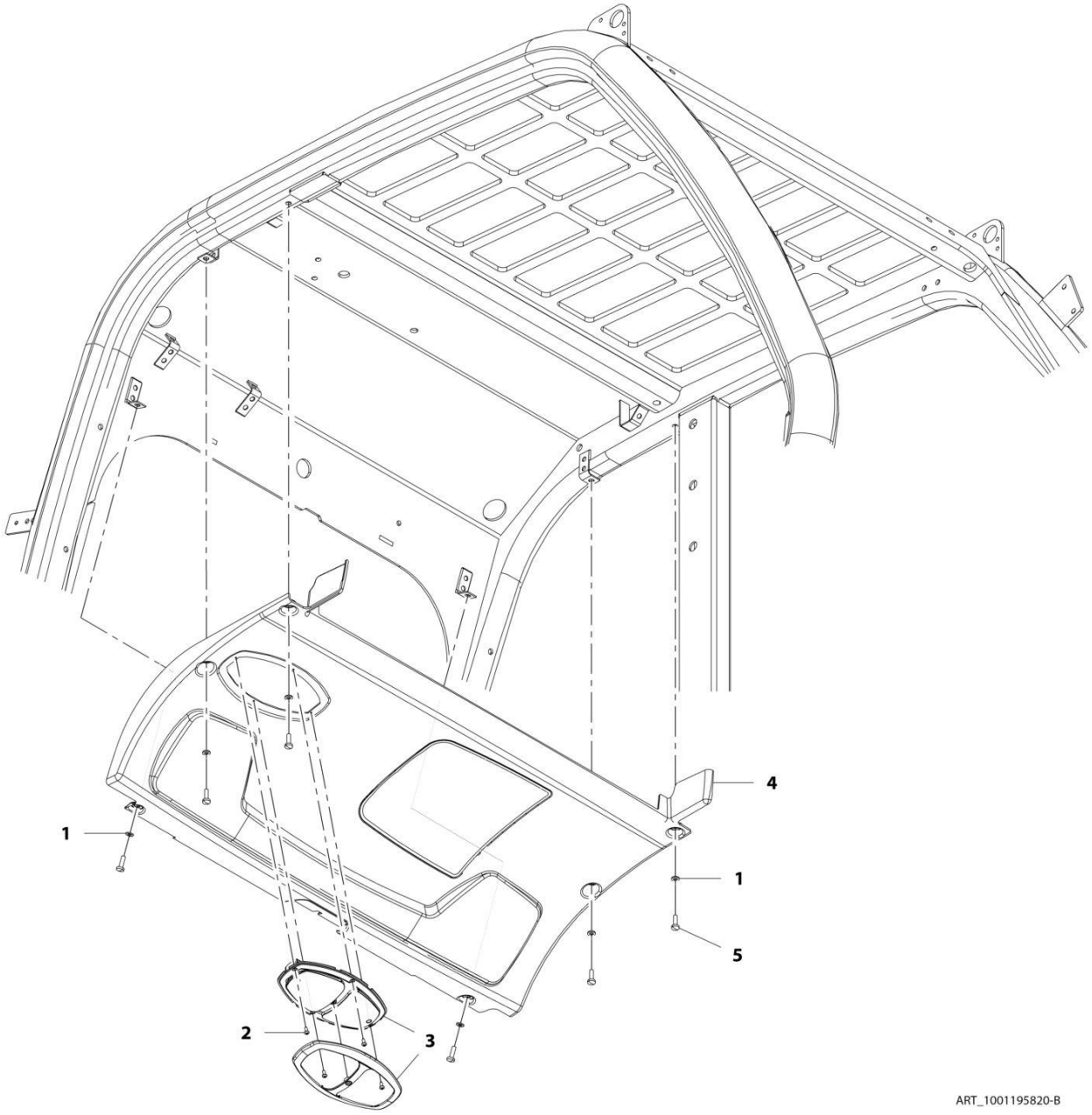

FIGURE 6-49. HEADLINER INSTALLATION

ITEM	PART NUMBER	QTY	DESCRIPTION	REV
	1001195820	Ref	Headliner Installation	C
1	4811700	6	Washer, M6	
2	7029486	4	Screw	
3	1001167015	1	Lamp, Dome	
4	1001195822	1	Panel, Headliner	
5	4031708001	1	Cap Screw M6 x 20	

FIGURE 6-50. HEADLINER/RADIO READY PACKAGE INSTALLATION

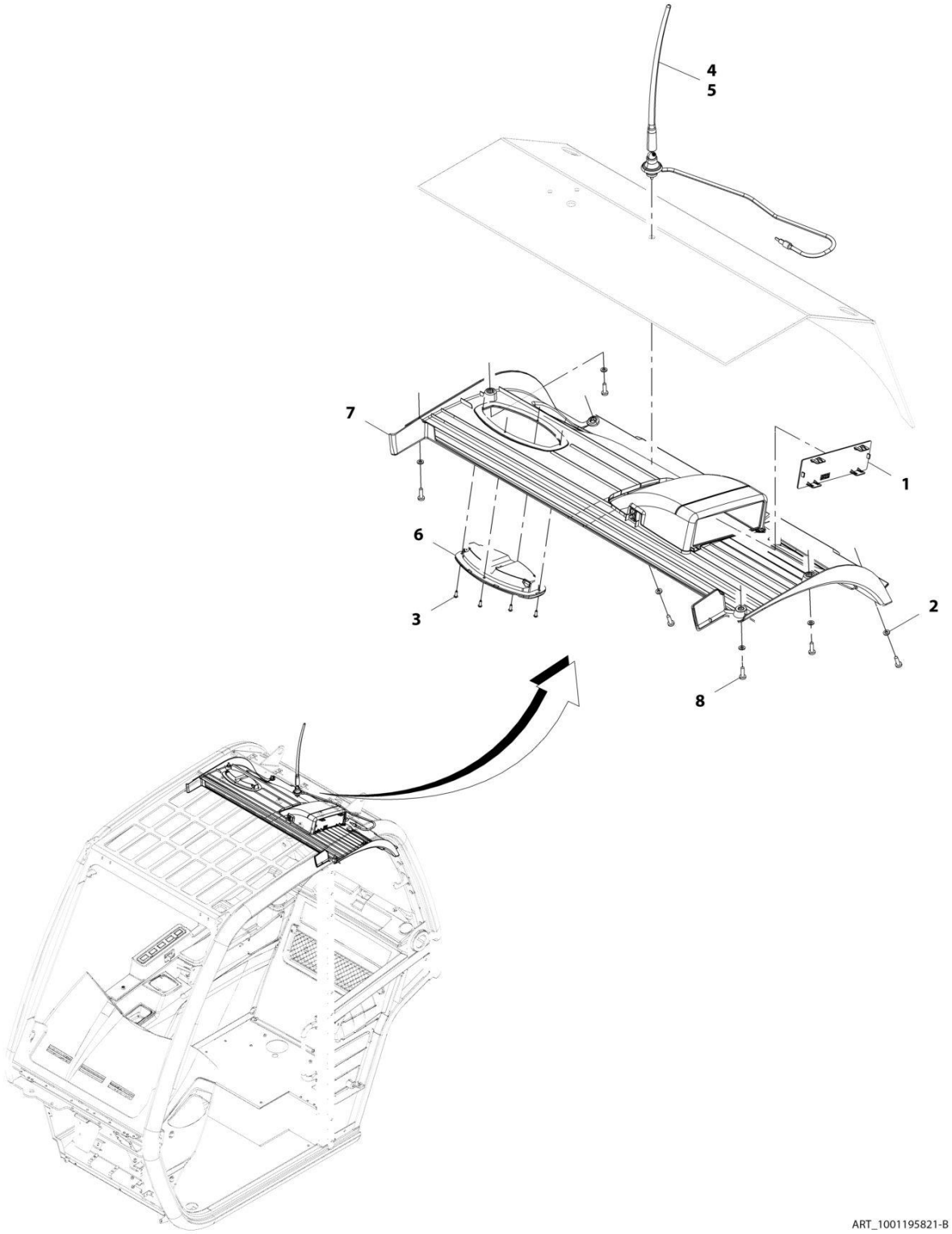

FIGURE 6-50. HEADLINER/RADIO READY PACKAGE INSTALLATION

ITEM	PART NUMBER	QTY	DESCRIPTION	REV
	1001195821	Ref	Headliner/Radio Ready Package Installation	B
1	1001200968	1	Plate	
2	4811700	6	Washer, 6M	
3	7029486	4	Screw	
4	8005901	1	Antenna	
5	1001116128	AR	Sealant, Polysiloxane	
6	1001167015	1	Lamp	
7	1001195823	1	Cover, Headliner	
8	4010610002	6	Screw, M6X20	

FIGURE 6-51. CAB TRIM INSTALLATION

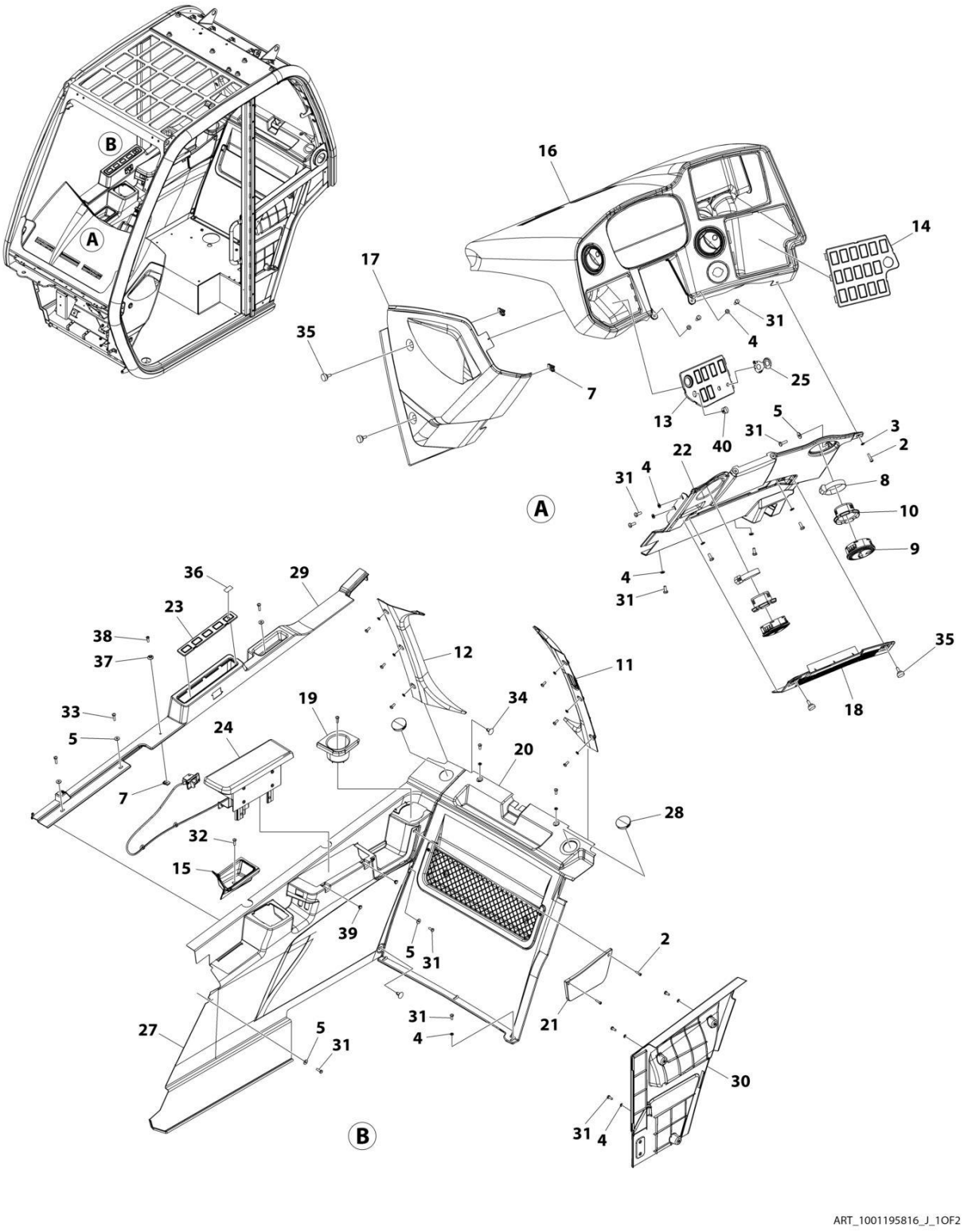

ART_1001195816_J_1OF2

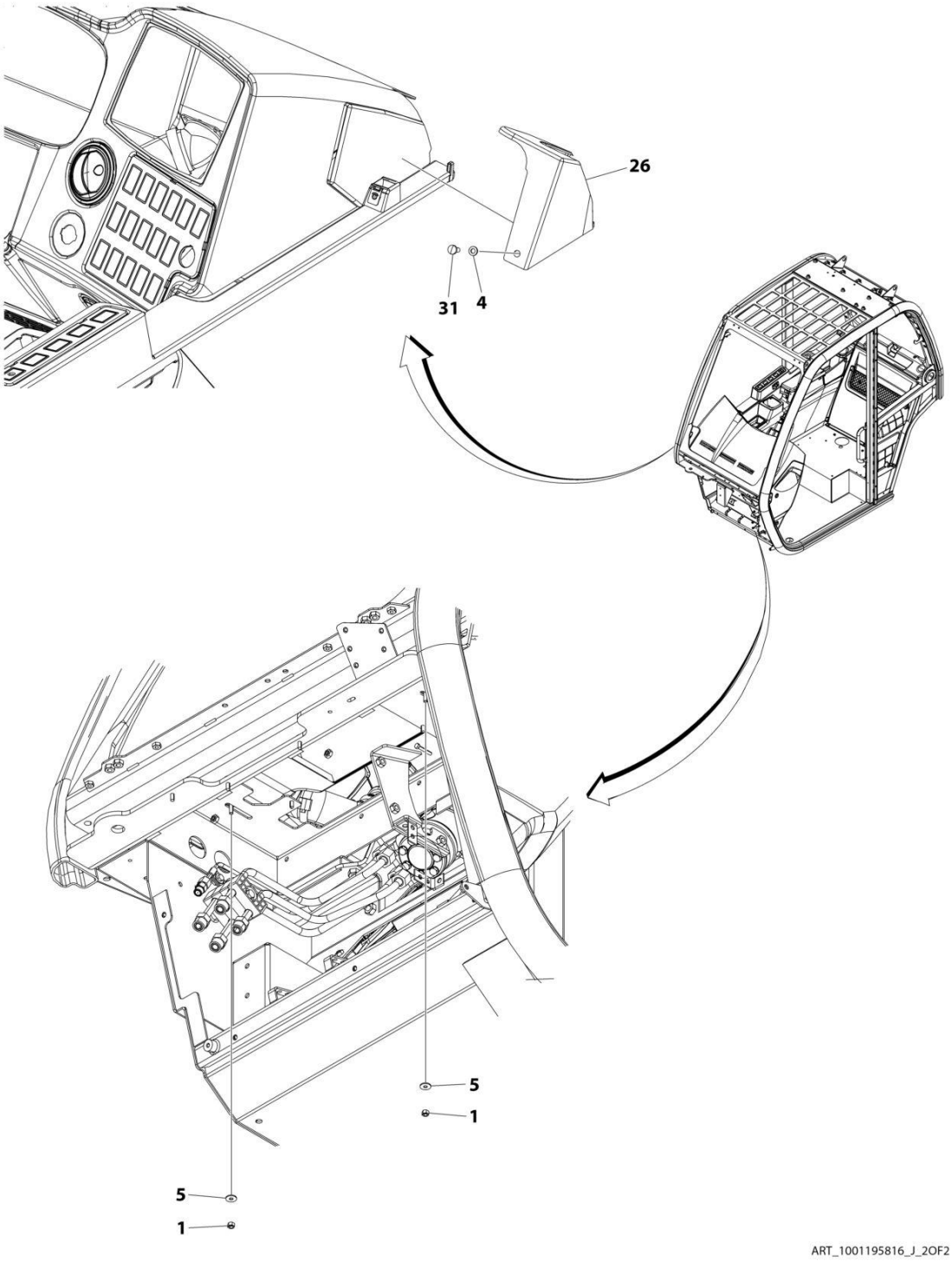
26
31
4
5
1
5
1
ART_1001195816_J_2OF2

FIGURE 6-51. CAB TRIM INSTALLATION

ITEM	PART NUMBER	QTY	DESCRIPTION	REV
	1001195816	Ref	CAB TRIM INSTALLATION	J
1	3290605	2	Nut, Lock M6 x 1	
2	4031608001	3	Screw M5 x 20	
3	4811600	1	Washer M5	
4	4811700001	23	Washer M6	
5	4811702001	7	Washer M6	
7	8305919	2	Nut M6	
8	8405201	2	Clamp	
9	1001147449	2	Vent	
10	1001149278	2	Connector, Vent	
11	1001161252	1	Cover, LH C-Post	
12	1001161253	1	Cover, RH C-Post	
13	1001268846	1	Plate, Switch	
14	1001219865	1	Plate, Switch	
15	1001169603	1	Tray	
16	1001169604	1	Assembly, Dash Cover (See Separate Breakdown in this Section)	
17	1001161855	1	Cover, Side Dash	
18	1001170504	1	Cover, Recirculation Grille	
19	1001170518	1	Holder, Cup	
20	1001170519	1	Assembly, Rear Panel Cover (See Separate Breakdown in this Section)	
21	1001173965	1	Bezel, Net	
22	1001175903	1	Cover, Lower Dash	
23	1001219863	1	Plate, Switch	
24	1001181726	1	Installation, Armrest (See Separate Breakdown in this Section)	
25	1001184975	1	Decal, HVAC	
26	1001185870	1	Cover, Lower A-Post	
27	1001189182	1	Cover, RH Side	
28	1001223265	2	Grommet	
29	1001195817	1	Cover, RH Extension	
30	1001195818	1	Panel, LH Side	
31	4010608002	26	Screw M6 x 16	
32	4010610002	1	Screw M6 x 20	
33	4010612002	3	Screw M6 x 25	
34	1001211907	2	Screw	
35	1001208308	4	Thumb Screw M6 x 15	
36	1001226481	1	Decal, Blank	
37	1001098150	1	Washer M6	
38	1001132564	1	Screw M6 x 20	
39	1001227133	2	Grommet	
40	1001207963	1	Plug	

FIGURE 6-52. DASH COVER ASSEMBLY

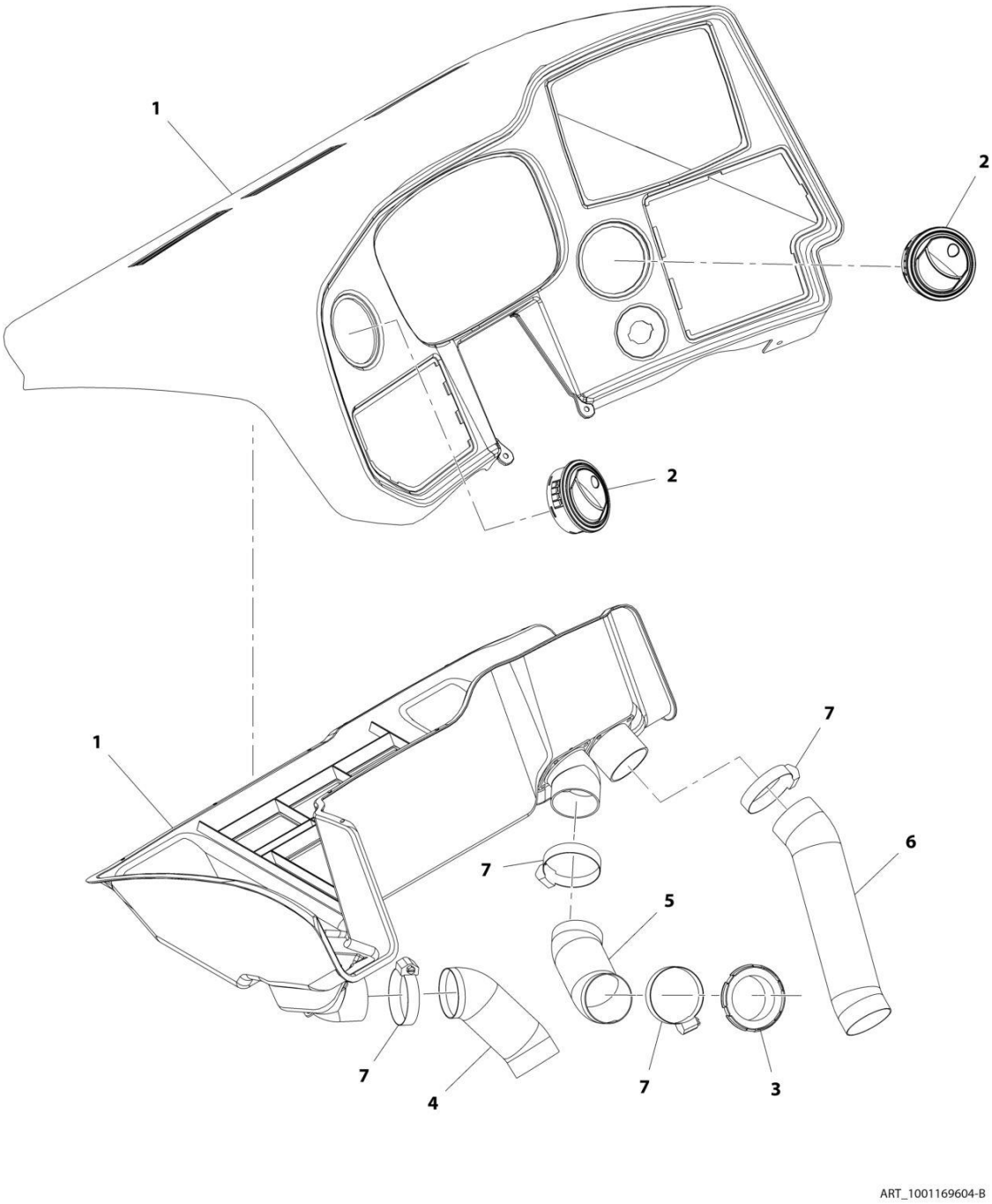

FIGURE 6-52. DASH COVER ASSEMBLY

ITEM	PART NUMBER	QTY	DESCRIPTION	REV
	1001169604	Ref	Dash Cover Assembly (Construction)	B
1	1001161851	1	Panel, Top Dash	
2	1001147449	2	Vent, Air	
3	1001149278	1	Vent, Connector	
4	1001174652	1	Hose	
5	1001174653	1	Hose	
6	1001174655	1	Hose	
7	8405201	4	Clamp, Gear	

FIGURE 6-53. REAR PANEL COVER ASSEMBLY

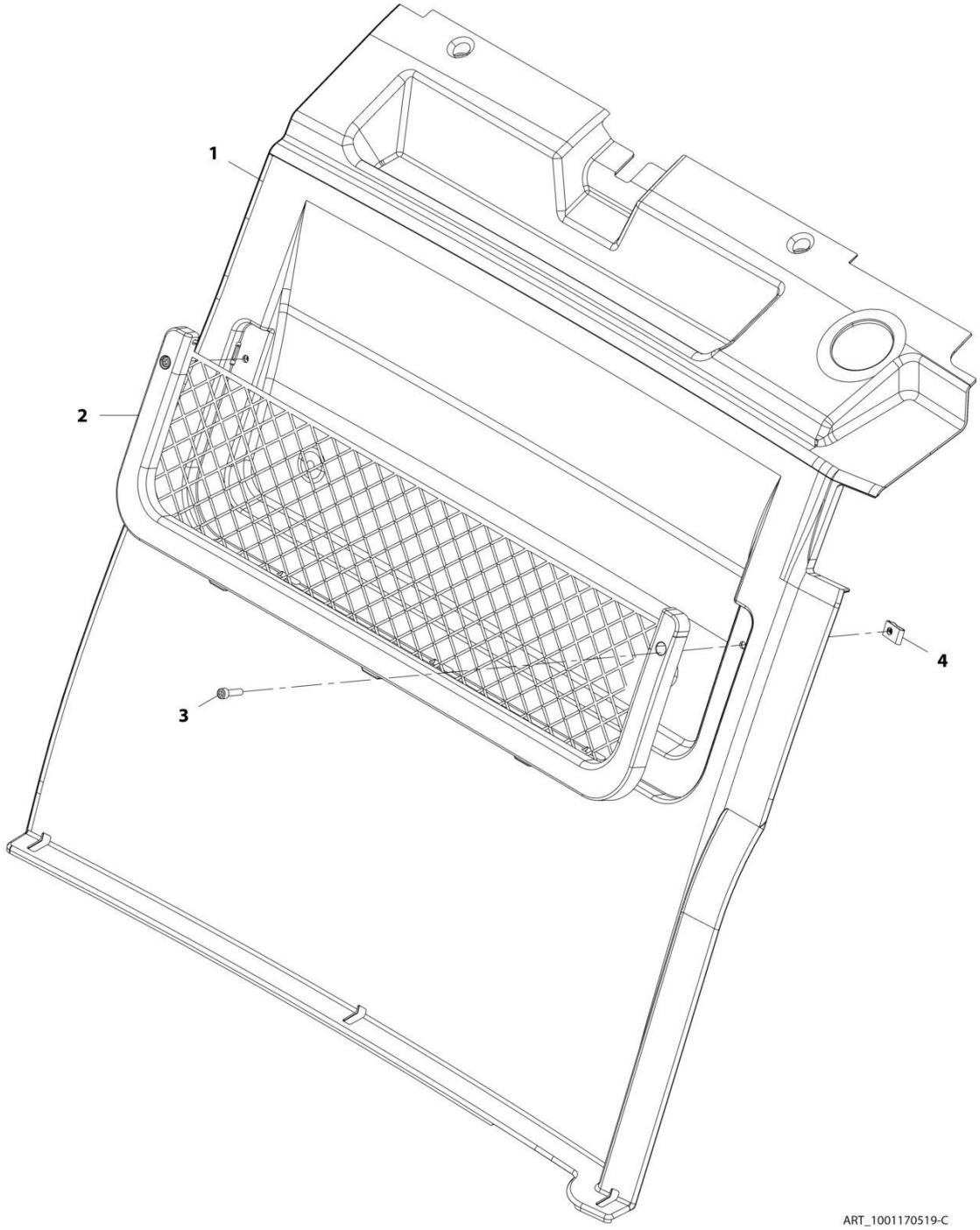

FIGURE 6-53. REAR PANEL COVER ASSEMBLY

ITEM	PART NUMBER	QTY	DESCRIPTION	REV
	1001170519	Ref	Rear Panel Cover Assembly	C
1	1001161067	1	Panel, Rear	
2	1001170514	1	Storage Net, Rear Panel	
3	4031608	2	Bolt, M5X20	
4	1001183550	2	Nut, Cage M5	

FIGURE 6-54. ADJUSTABLE ARMREST INSTALLATION

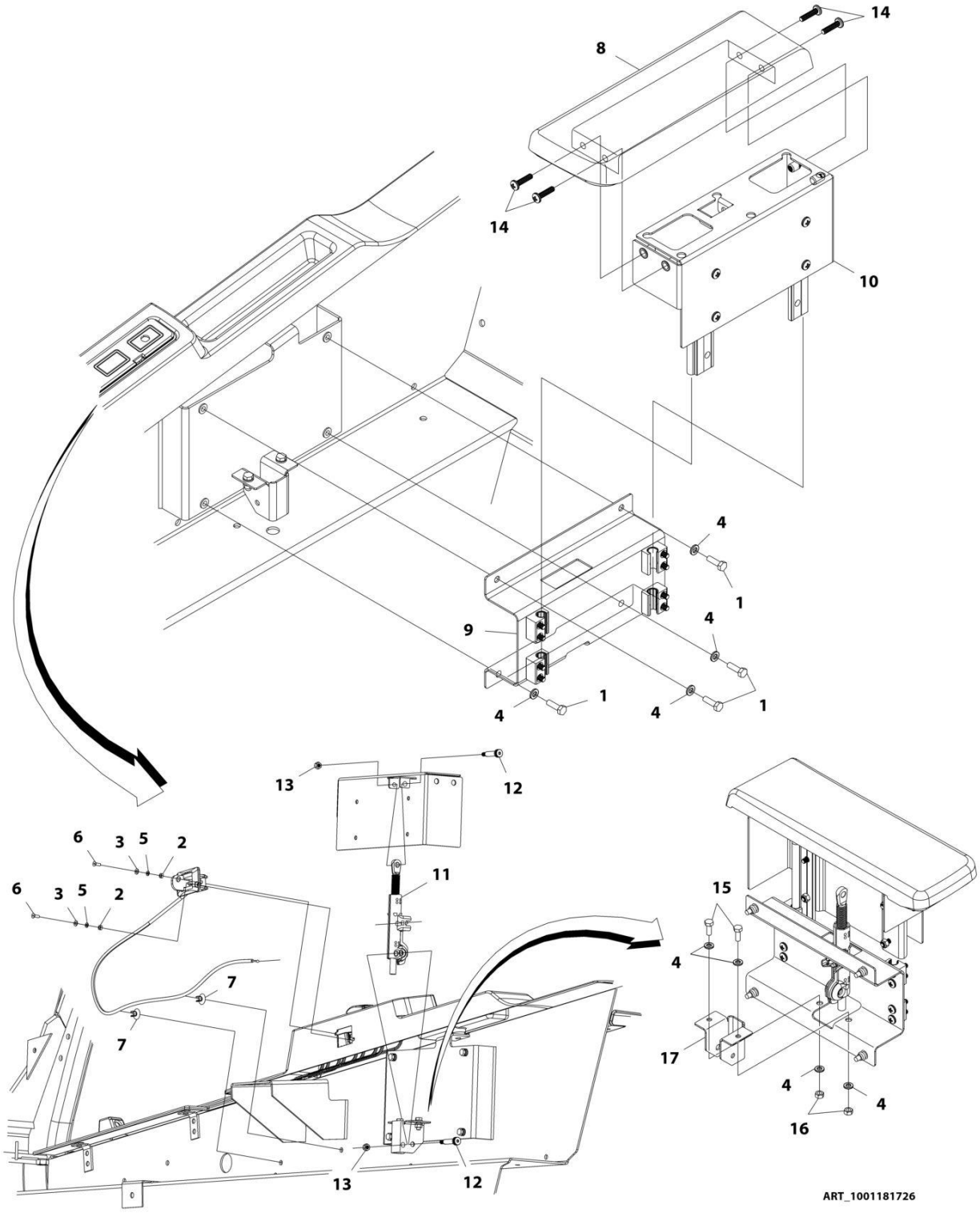

FIGURE 6-54. ADJUSTABLE ARMREST INSTALLATION

ITEM	PART NUMBER	QTY	DESCRIPTION	REV
	1001181726	Ref	Adjustable Armrest Installation	F
1	0700610	4	Bolt, M6X20	
2	3290401	2	Nut, M4X0.7	
3	4811400	2	Washer, M4	
4	4811700	8	Washer, M6	
5	4831400	2	Washer, Lock M4	
6	1001097244	2	Screw, M4X12	
7	1001165458	4	Hose	
8	1001191281	1	Armrest (See Separate Breakdown in this Section)	
9	1001191283	1	Bracket, Fixed Armrest (See Separate Breakdown in this Section)	
10	1001191284	1	Bracket, Moving Armrest (See Separate Breakdown in this Section)	
11	1001191285	1	Spring	
12	1001191370	2	Screw, M6	
13	3290605	2	Nut, M6X1 Grade 8	
14	4010612002	4	Screw, M6X25	
15	0760608	2	Bolt, M6X16	
16	3290601	2	Nut, M6X1	
17	1001212468	1	Bracket, Locking Spring Mount	

FIGURE 6-55. ROOF CAP INSTALLATION (NO A/C)

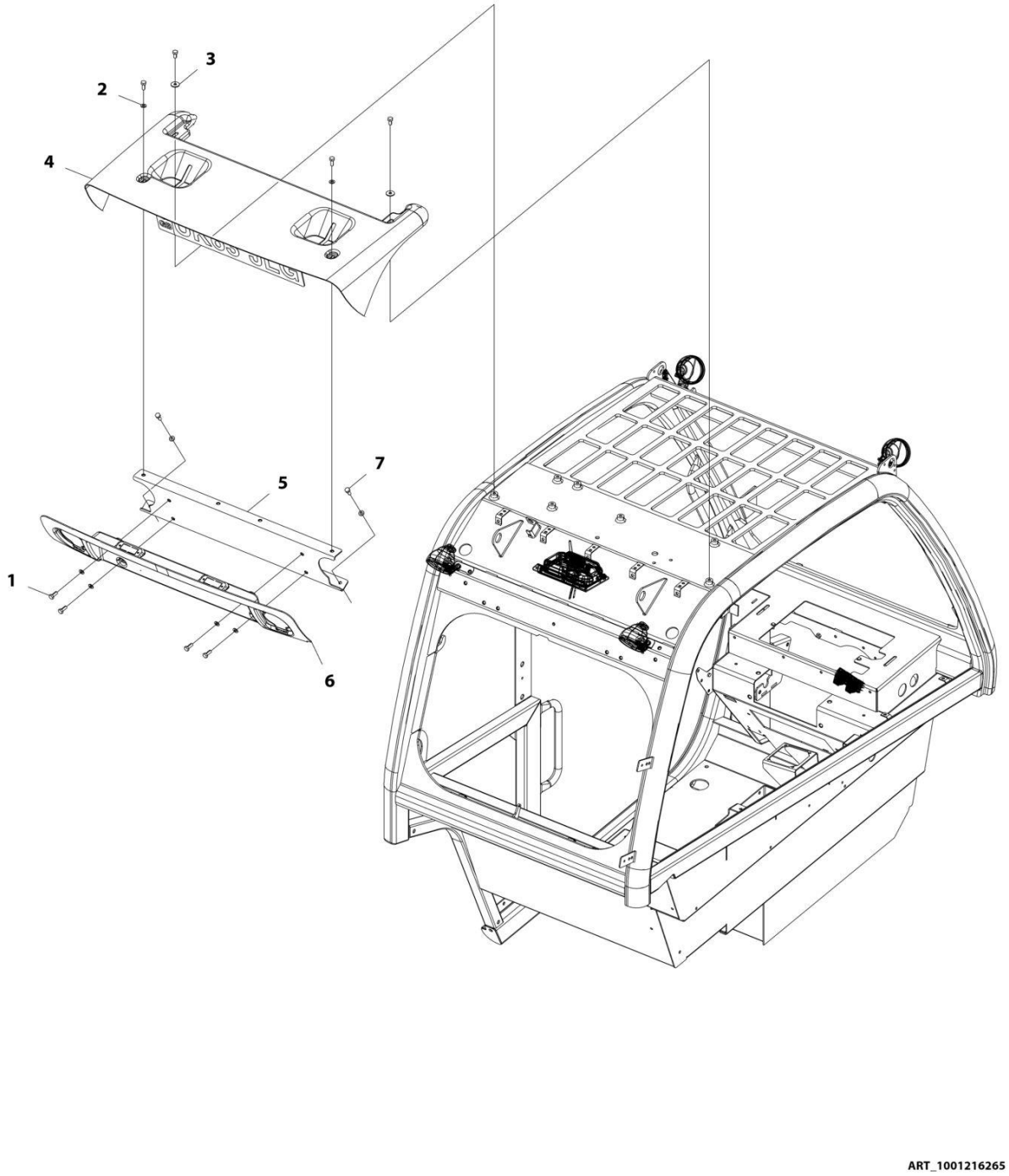

FIGURE 6-55. ROOF CAP INSTALLATION (NO A/C)

ITEM	PART NUMBER	QTY	DESCRIPTION	REV
	1001216265	Ref	Roof Cap Installation (No A/C)	B
1	0760810	8	Bolt, M8X20	
2	4811900	8	Washer, M8	
3	4811902	2	Washer, M8	
4	1001182330	1	Cover, Short Upper Roof Cap	
5	1001185633	1	Bracket, Roof Cap Mount	
6	1001216270	1	Cover, Short Lower Roof Cap	
7	0760808	2	Bolt, M8X16	

FIGURE 6-56. ROOF CAP INSTALLATION (A/C)

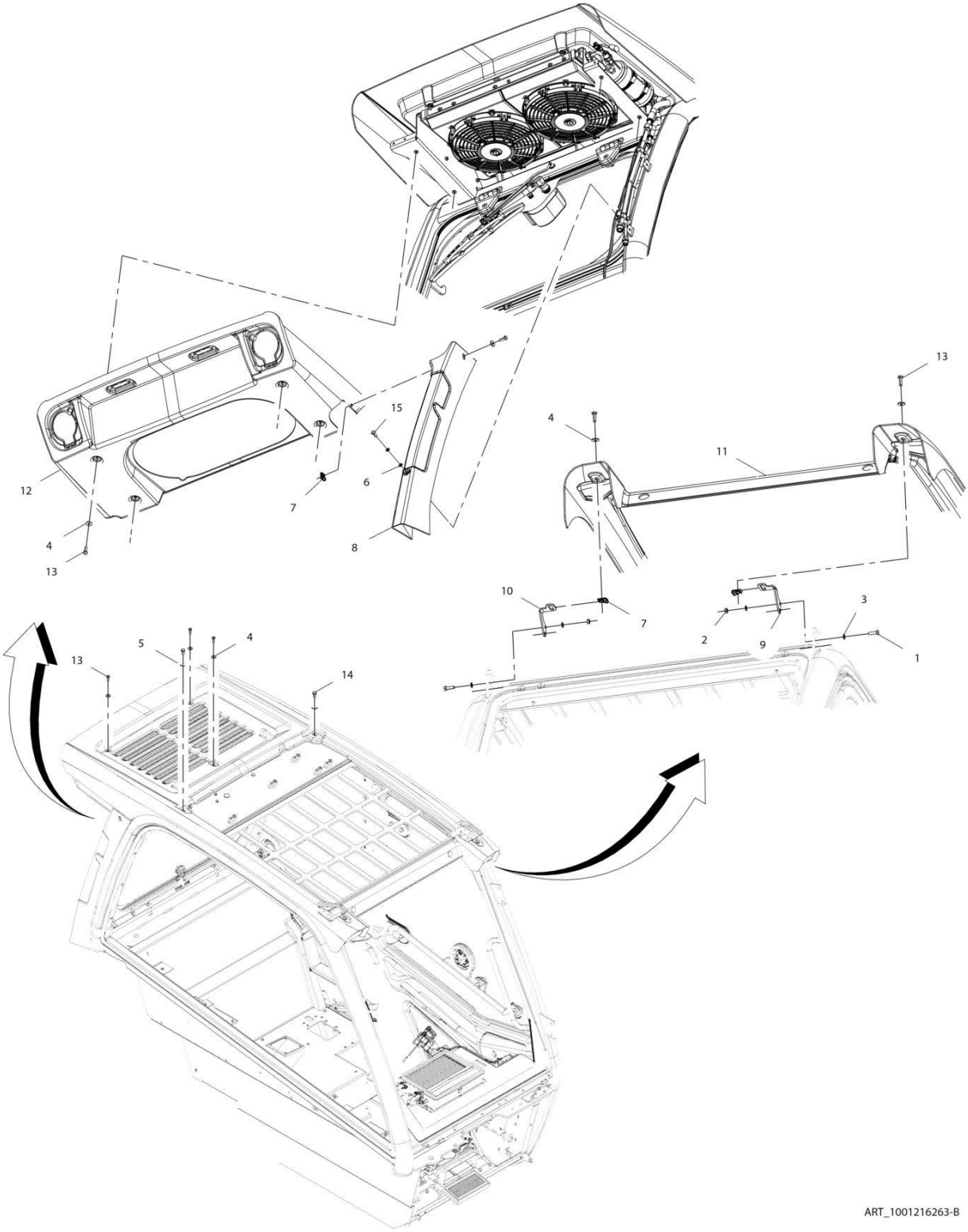

FIGURE 6-56. ROOF CAP INSTALLATION (A/C)

ITEM	PART NUMBER	QTY	DESCRIPTION	REV
	1001216263	Ref	Roof Cap (A/C) Installation	B
1	0700610	4	Bolt, M6X20	
2	3290601	4	Nut, M6X1	
3	4811700	9	Washer, M6	
4	4811702	10	Washer, M6	
5	4811902	2	Washer, M8	
6	4831700	1	Washer, Lock M6	
7	8305919	3	Nut, M6	
8	1001174741	1	Cover	
9	1001174800	1	Bracket	
10	1001174801	1	Bracket	
11	1001216267	1	Cover, Upper Roof Cap	
12	1001216269	1	Cover, Lower Roof Cap	
13	4010610002	10	Screw, Posi-Drive M6X20	
14	0760808	2	Bolt, M8X16	
15	4010608002	1	Screw, M6X16	

FIGURE 6-57. NO SUNSCREEN INSTALLATION

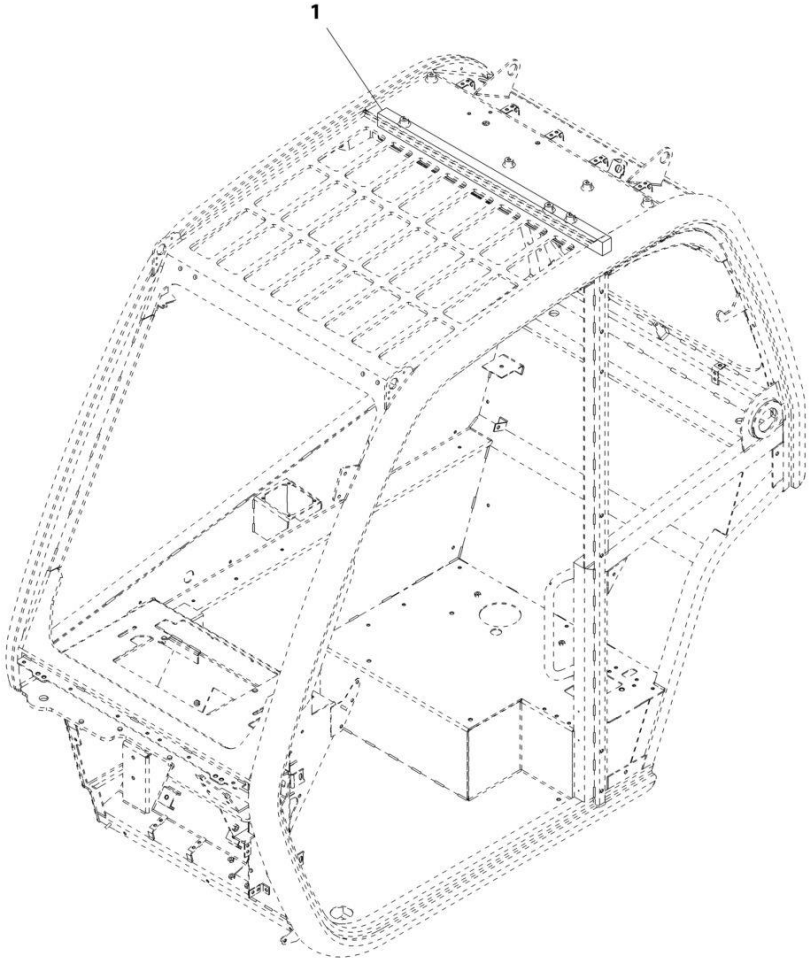

ART_1001211041-A

FIGURE 6-57. NO SUNSCREEN INSTALLATION

ITEM	PART NUMBER	QTY	DESCRIPTION	REV
	1001211041	Ref	No Sunscreen Installation	A
1	1001208192	1	Seal, Foam	

FIGURE 6-58. RETRACTABLE SUNSCREEN INSTALLATION

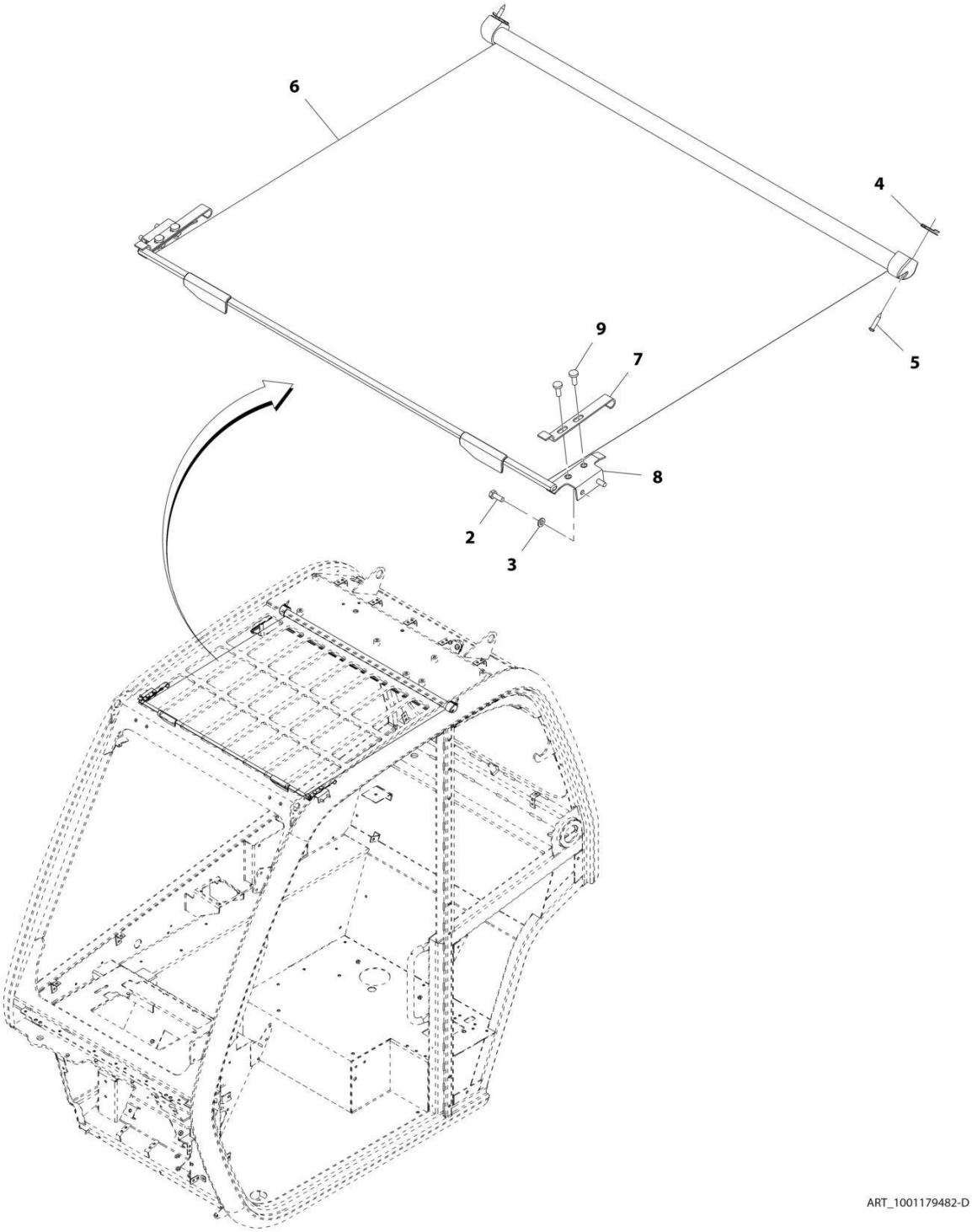

FIGURE 6-58. RETRACTABLE SUNSCREEN INSTALLATION

ITEM	PART NUMBER	QTY	DESCRIPTION	REV
	1001179482	Ref	Retractable Sunscreen Installation	D
2	0760608	4	Bolt, M6X16	
3	4811700	4	Washer, M6	
4	1001111076	2	Nut, Spire	
5	1001111147	2	Screw, Self Tapping	
6	1001179483	1	Cab, Sun Blind	
7	1001209463	2	Bracket	
8	1001166385	2	Bracket	
9	4010608002	4	Screw, Posi-Drive M6X16	

FIGURE 6-59. NON SKID TAPE INSTALLATION

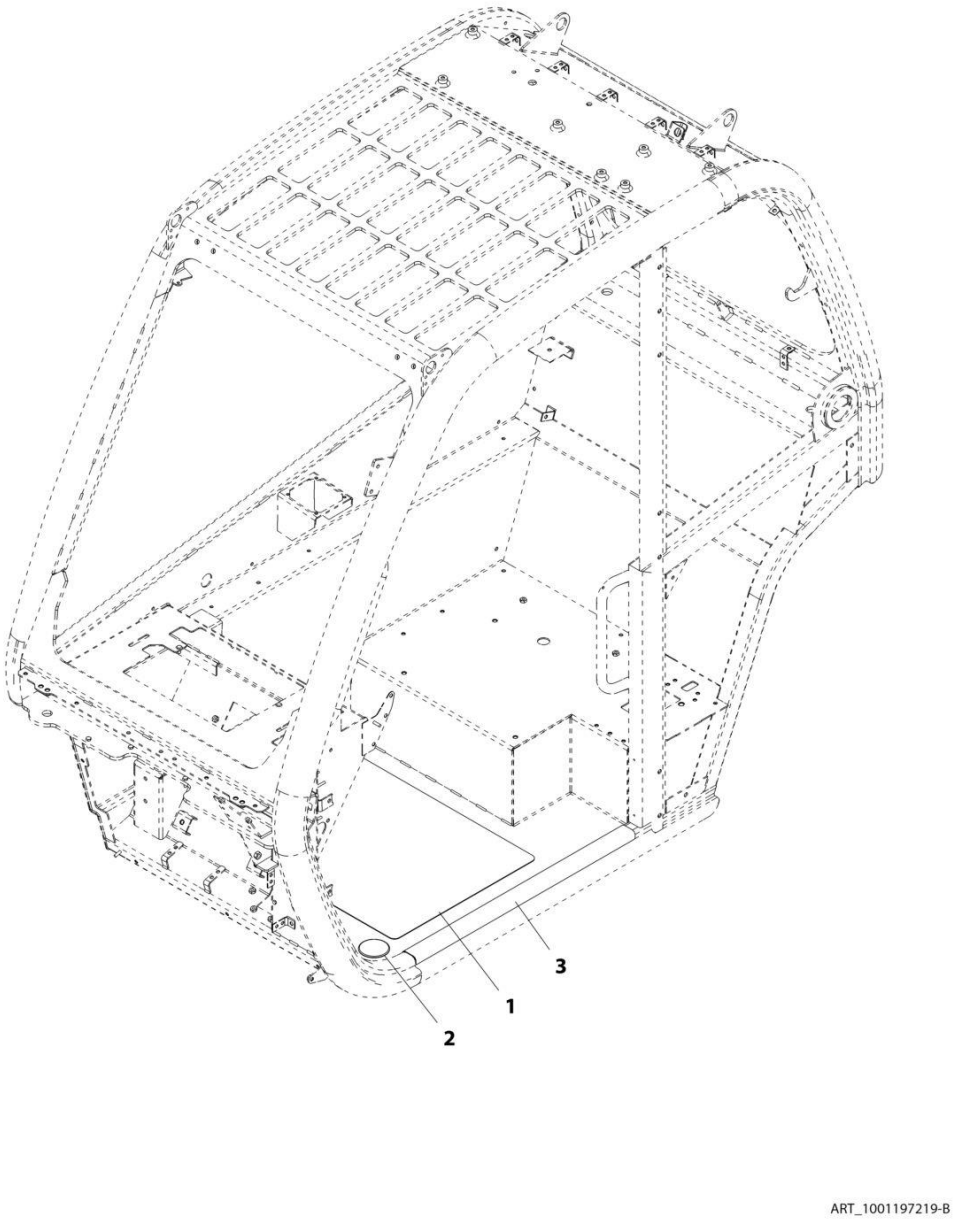

FIGURE 6-59. NON SKID TAPE INSTALLATION

ITEM	PART NUMBER	QTY	DESCRIPTION	REV
	1001197219	Ref	Non Skid Tape Installation	B
1	1001197217	1	Tape, Non Skid Floor	
2	1001197218	1	Grommet	
3	1001197259	1	Tape, Non Skid Frame	

FIGURE 6-60. FLOOR MAT INSTALLATION

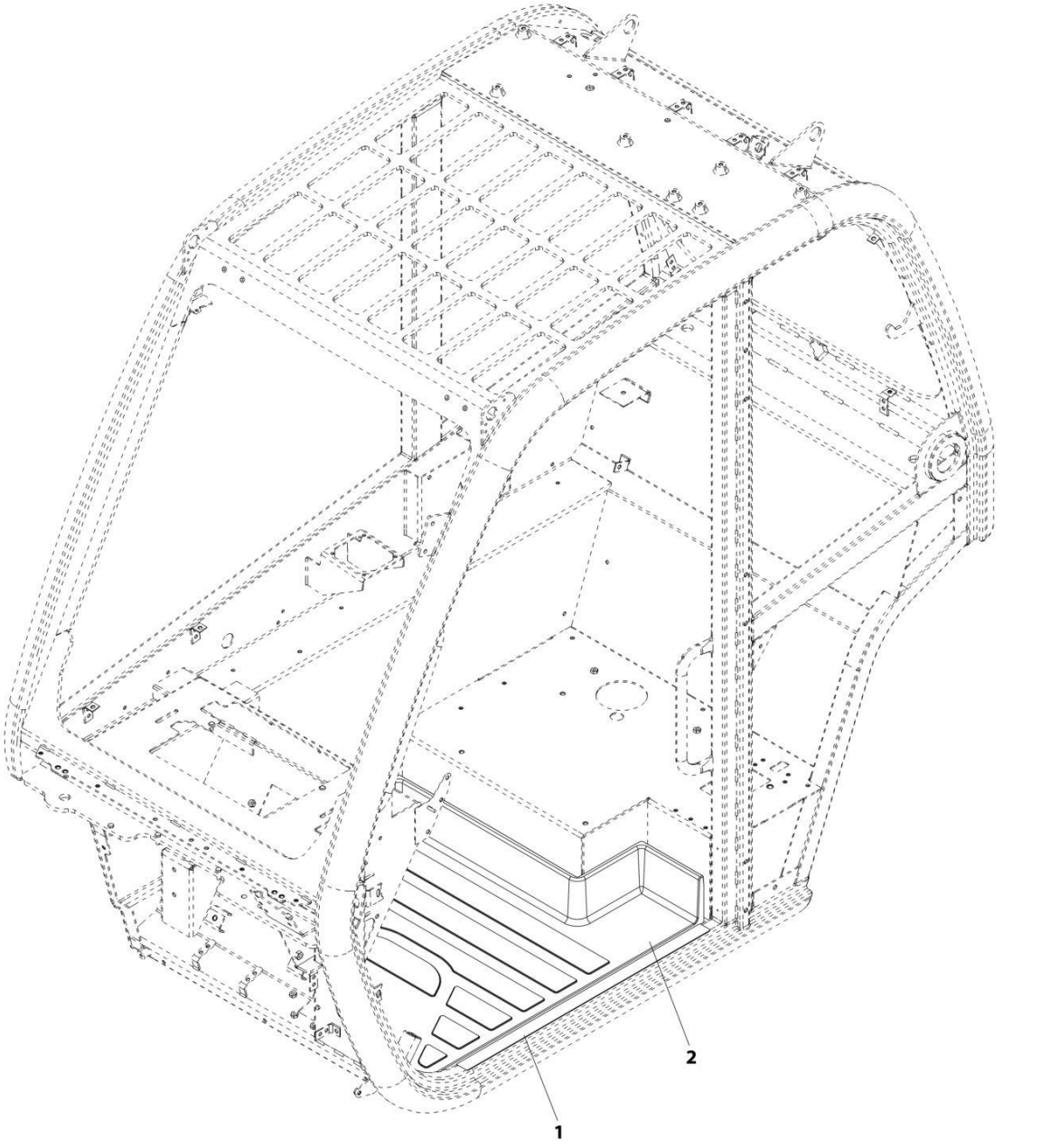

FIGURE 6-60. FLOOR MAT INSTALLATION

ITEM	PART NUMBER	QTY	DESCRIPTION	REV
	1001255273	Ref	Floor Mat Installation	B
1	1001197259	1	Tape, Non Skid Frame	
2	1001255131	1	Floor Mat, Cab	

FIGURE 6-61. SEAT BELT INSTALLATION (3IN)

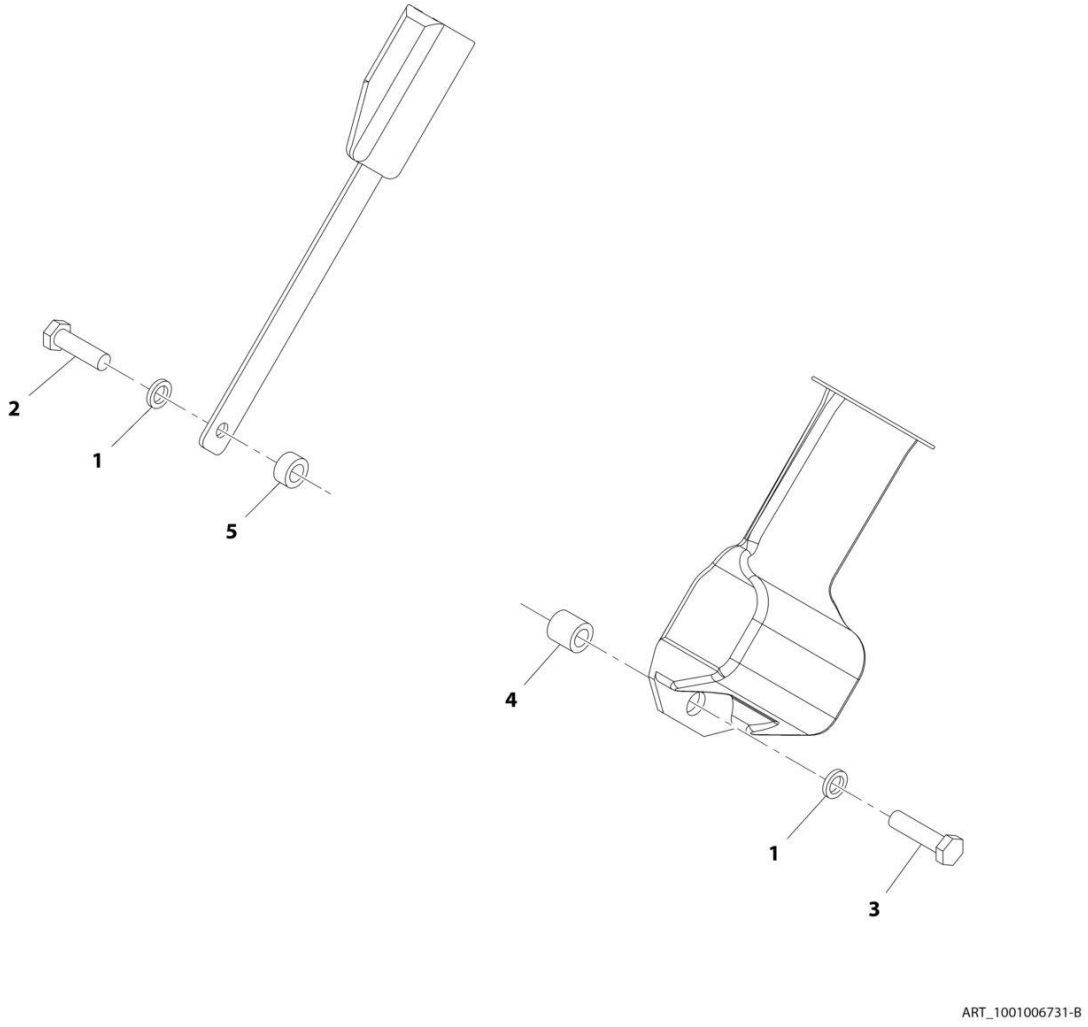

FIGURE 6-61. SEAT BELT INSTALLATION (3IN)

ITEM	PART NUMBER	QTY	DESCRIPTION	REV
	1001006731	Ref	Seat Belt Installation (3IN)	B
1	1001010646	2	Washer	
2	1001010647	1	Bolt	
3	1001010648	1	Bolt	
4	1001010649	1	Spacer	
5	1001010650	1	Spacer	

FIGURE 6-62. SEAT BELT INSTALLATION (2IN)

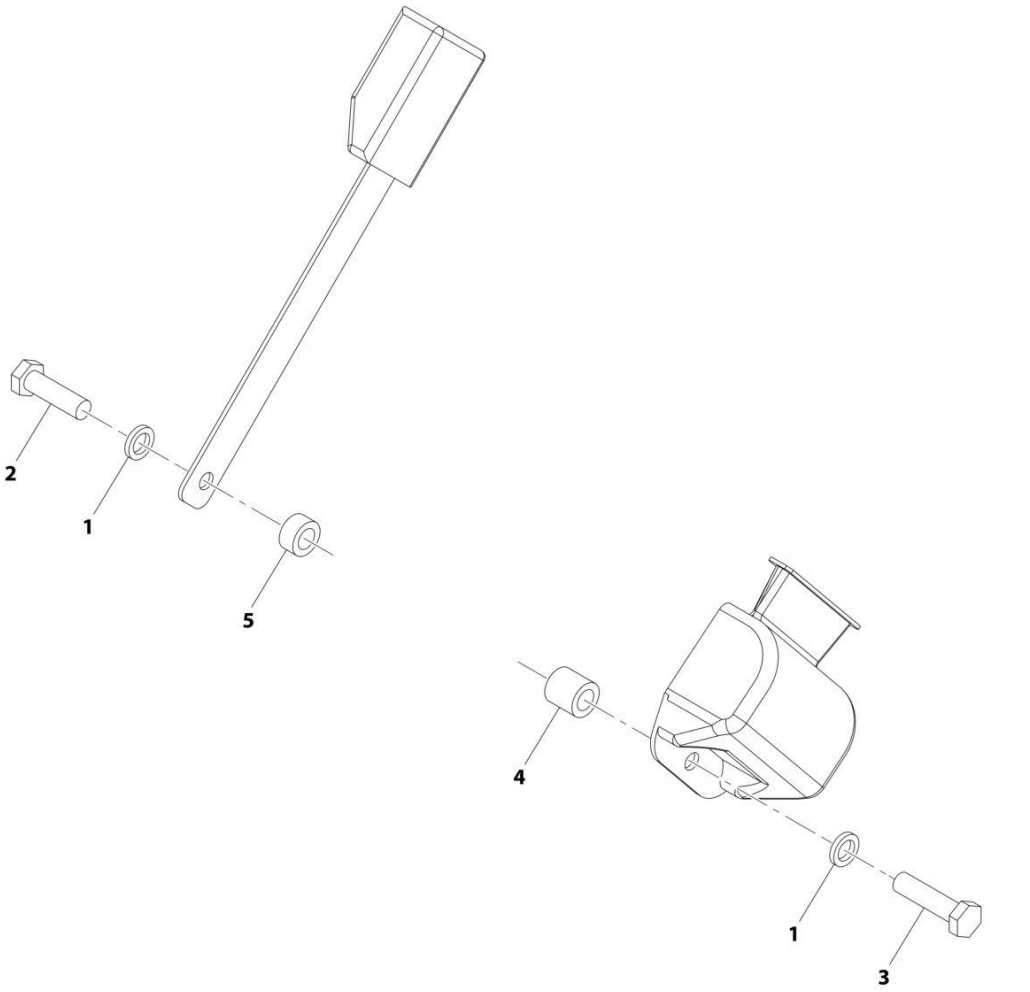

ART_1001006730

FIGURE 6-62. SEAT BELT INSTALLATION (2IN)

ITEM	PART NUMBER	QTY	DESCRIPTION	REV
	1001006730	Ref	Seat Belt Installation (2IN)	H
1	1001010646	2	Washer	
2	1001010647	1	Bolt	
3	1001010648	1	Bolt	
4	1001010649	1	Spacer, Shim	
5	1001010650	1	Spacer, Shim	

FIGURE 6-63. SEAT BELT INSTALLATION (3 INCH)

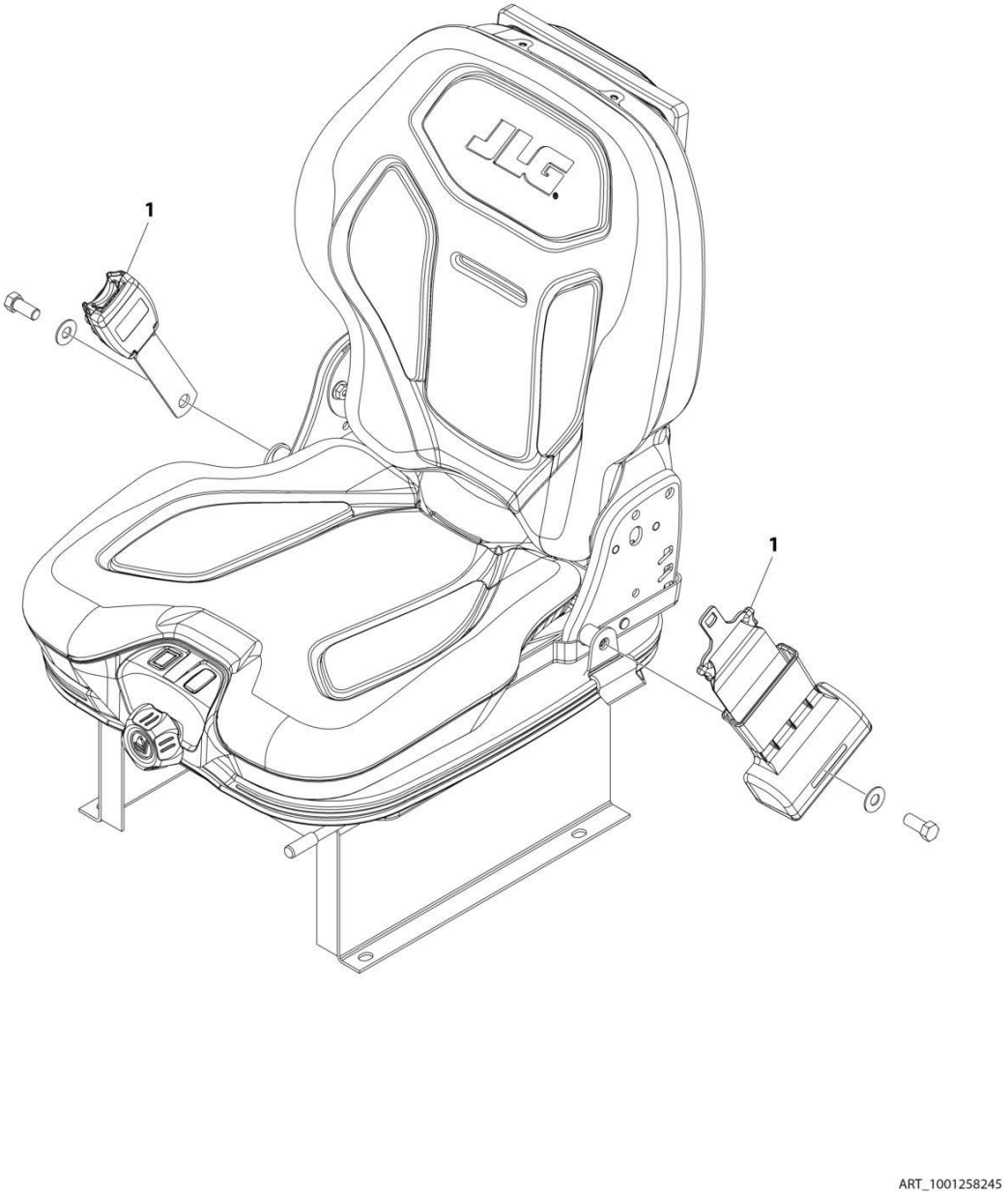

FIGURE 6-63. SEAT BELT INSTALLATION (3 INCH)

ITEM	PART NUMBER	QTY	DESCRIPTION	REV
	1001258245	Ref	Seat Belt Installation (3in Width)	B
1	1001258244	1	Seat Belt (3in) (Black Strap)	
1	1001275933	1	Seat Belt (3in) (Orange Strap)	

FIGURE 6-64. ENCLOSED CAB FRONT COVER INSTALLATION

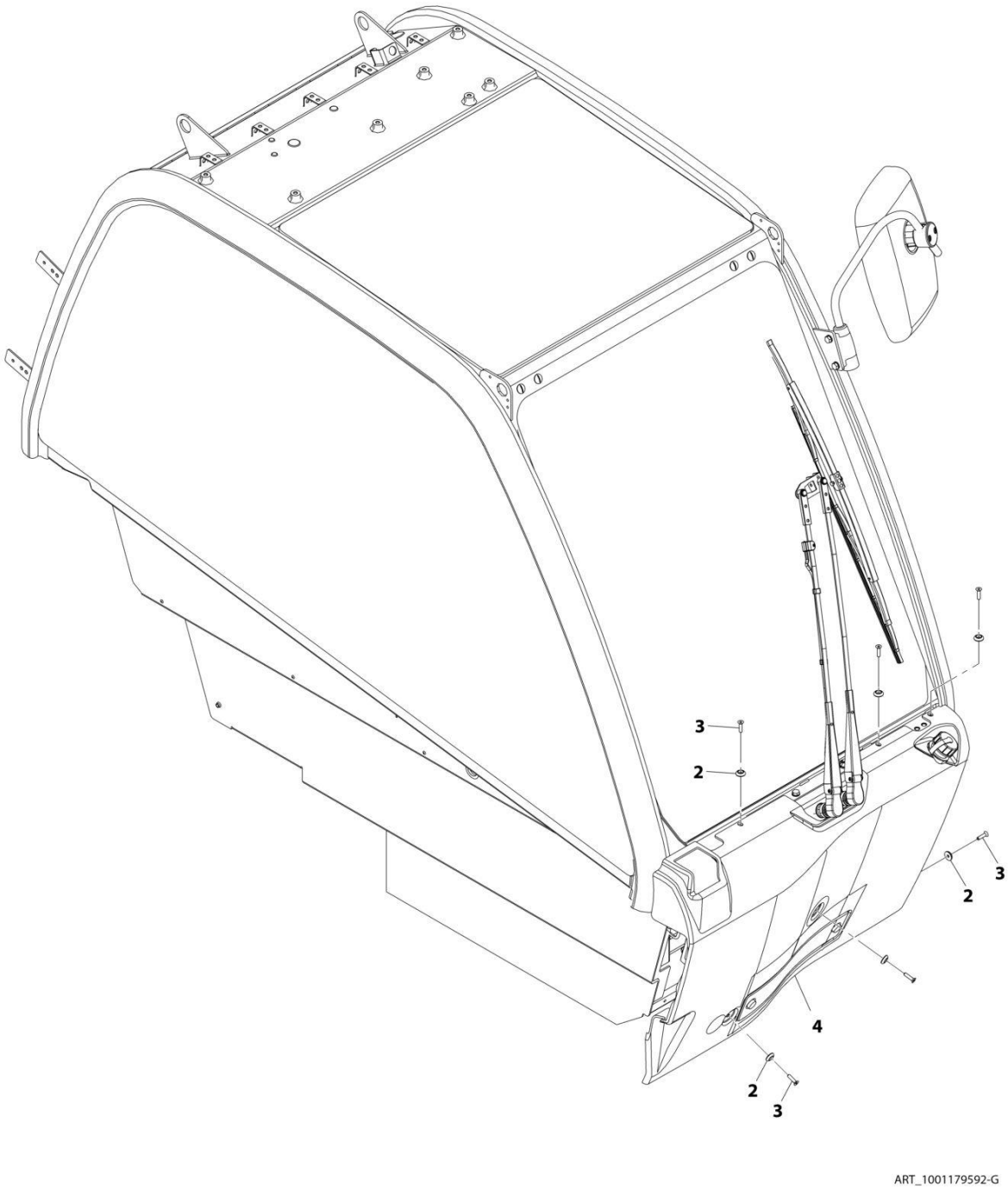

FIGURE 6-64. ENCLOSED CAB FRONT COVER INSTALLATION

ITEM	PART NUMBER	QTY	DESCRIPTION	REV
	1001179592	Ref	Enclosed Cab Front Cover Installation	G
2	1001097540	6	Washer, M6	
3	3900379	6	Screw, M6-1X25 Grade 10.9	
4	1001170325	1	Cover, Front	

FIGURE 6-65. CAB GUARD INSTALLATION (TOP)

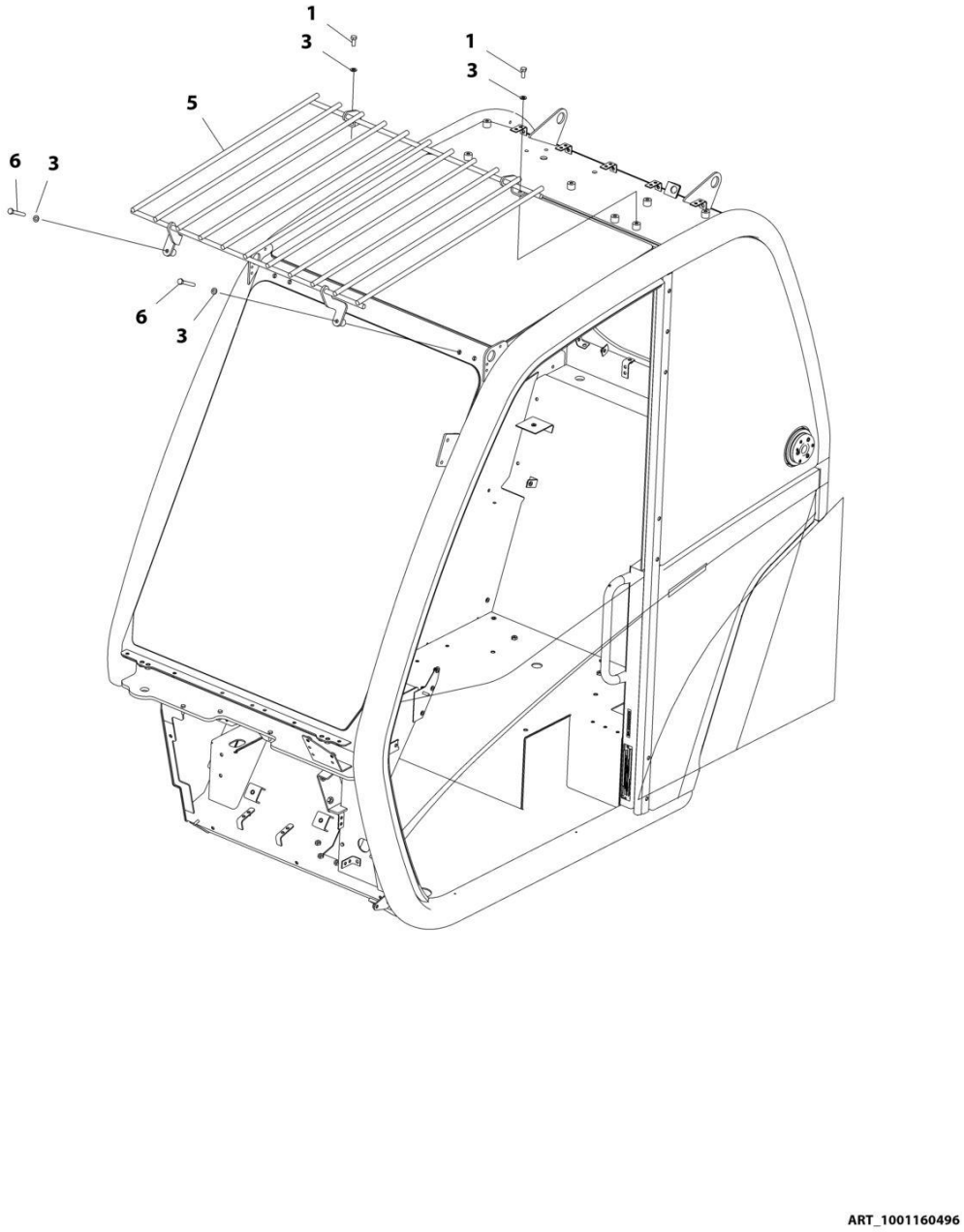

FIGURE 6-65. CAB GUARD INSTALLATION (TOP)

ITEM	PART NUMBER	QTY	DESCRIPTION	REV
	1001160496	Ref	Cab Guard Installation (Top)	G
1	0760810	2	Bolt, M8X20	
3	4811900	4	Washer, M8	
5	1001160503	1	Guard, Top Screen	
6	0700820	2	Bolt, M8X60	

FIGURE 6-66. CAB GUARD INSTALLATION (FRONT)

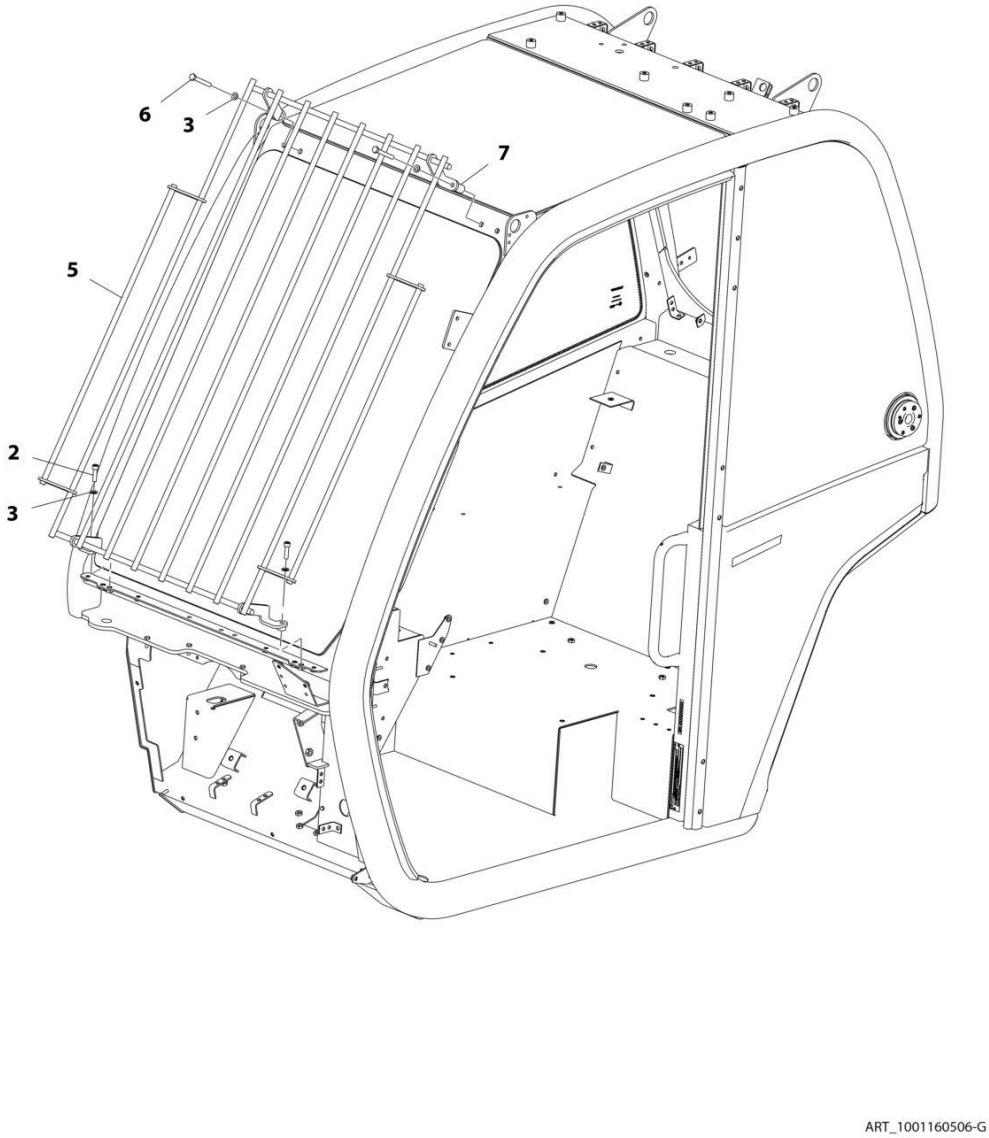

FIGURE 6-66. CAB GUARD INSTALLATION (FRONT)

ITEM	PART NUMBER	QTY	DESCRIPTION	REV
	1001160506	Ref	Cab Guard Installation (Front)	G
2	4031910	2	Bolt, M8X30	
3	4811900	4	Washer, M8	
5	1001180263	1	Guard, Front Screen	
6	0700820	2	Bolt, M8X60	
7	1001173257	2	Spacer	

FIGURE 6-67. CAB GUARD INSTALLATION (TOP AND FRONT)

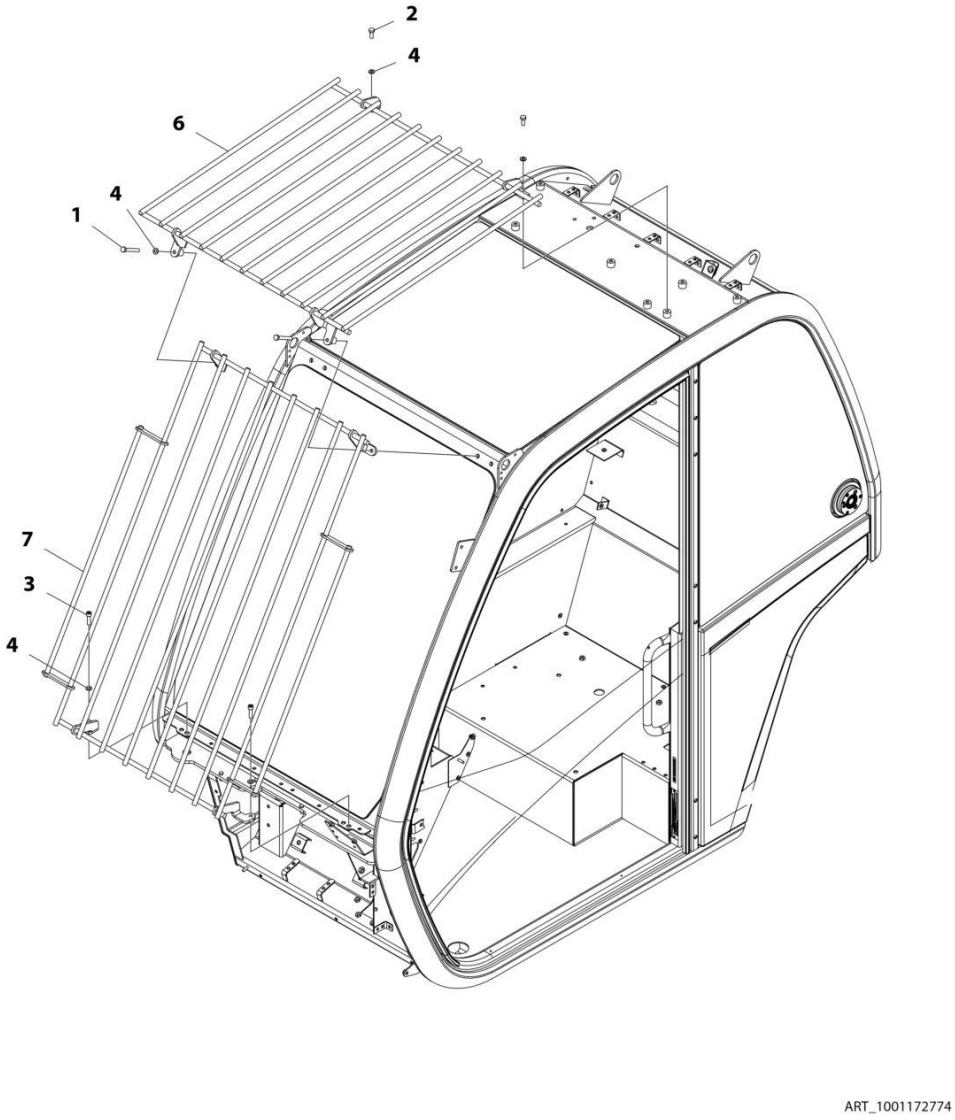

FIGURE 6-67. CAB GUARD INSTALLATION (TOP AND FRONT)

ITEM	PART NUMBER	QTY	DESCRIPTION	REV
	1001172774	Ref	CAB GUARD INSTALLATION (TOP AND FRONT)	G
1	0700820	2	Bolt M8 x 60	
2	0760810	2	Bolt M8 x 20	
3	4031910	2	Bolt M8 x 30	
4	4811900	6	Washer M8	
6	1001160503	1	Guard, Top Screen	
7	1001180263	1	Guard, Front Screen	

FIGURE 6-68. EXTERNAL WINDOW RELEASE INSTALLATION (ANSI)

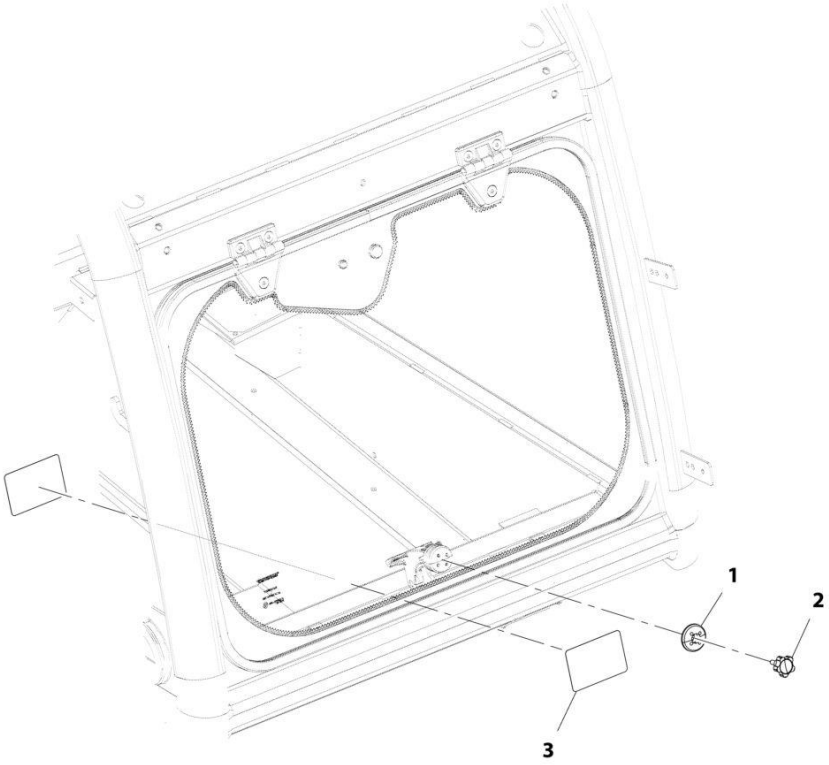

ART_1001212047-A

FIGURE 6-68. EXTERNAL WINDOW RELEASE INSTALLATION (ANSI)

ITEM	PART NUMBER	QTY	DESCRIPTION	REV
	1001212047	Ref	External Window Release Installation (ANSI)	A
1	1001179008	1	Cap, Latch Window	
2	1001179009	1	Cap, Knob M6	
3	1001212049	2	Decal, Emergency Exit	

FIGURE 6-69. REAR WINDOW INSTALLATION (WO/WIPER) (ISO)

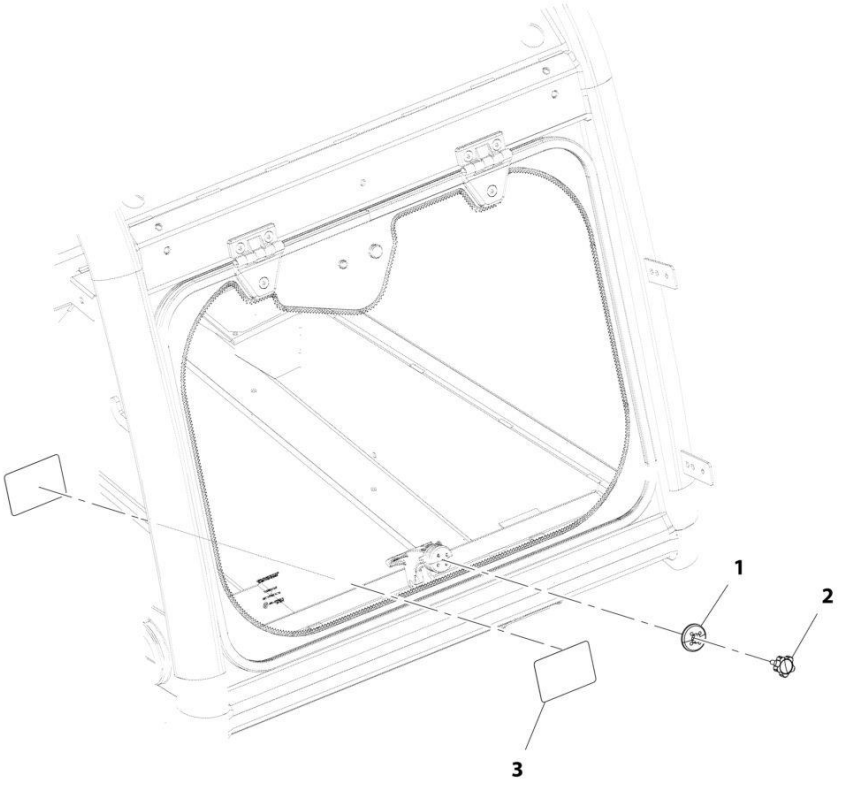

ART_1001212048-A

FIGURE 6-69. REAR WINDOW INSTALLATION (WO/WIPER) (ISO)

ITEM	PART NUMBER	QTY	DESCRIPTION	REV
	1001212048	Ref	Rear Window Installation (WO/Wiper) (ISO)	A
1	1001179008	1	Cap, Latch Window	
2	1001179009	1	Cap, Knob M6	
3	1001212050	2	Decal, Emergency Exit	

FIGURE 6-70. EXTERNAL WINDOW RELEASE INSTALLATION (CAN & ISO)

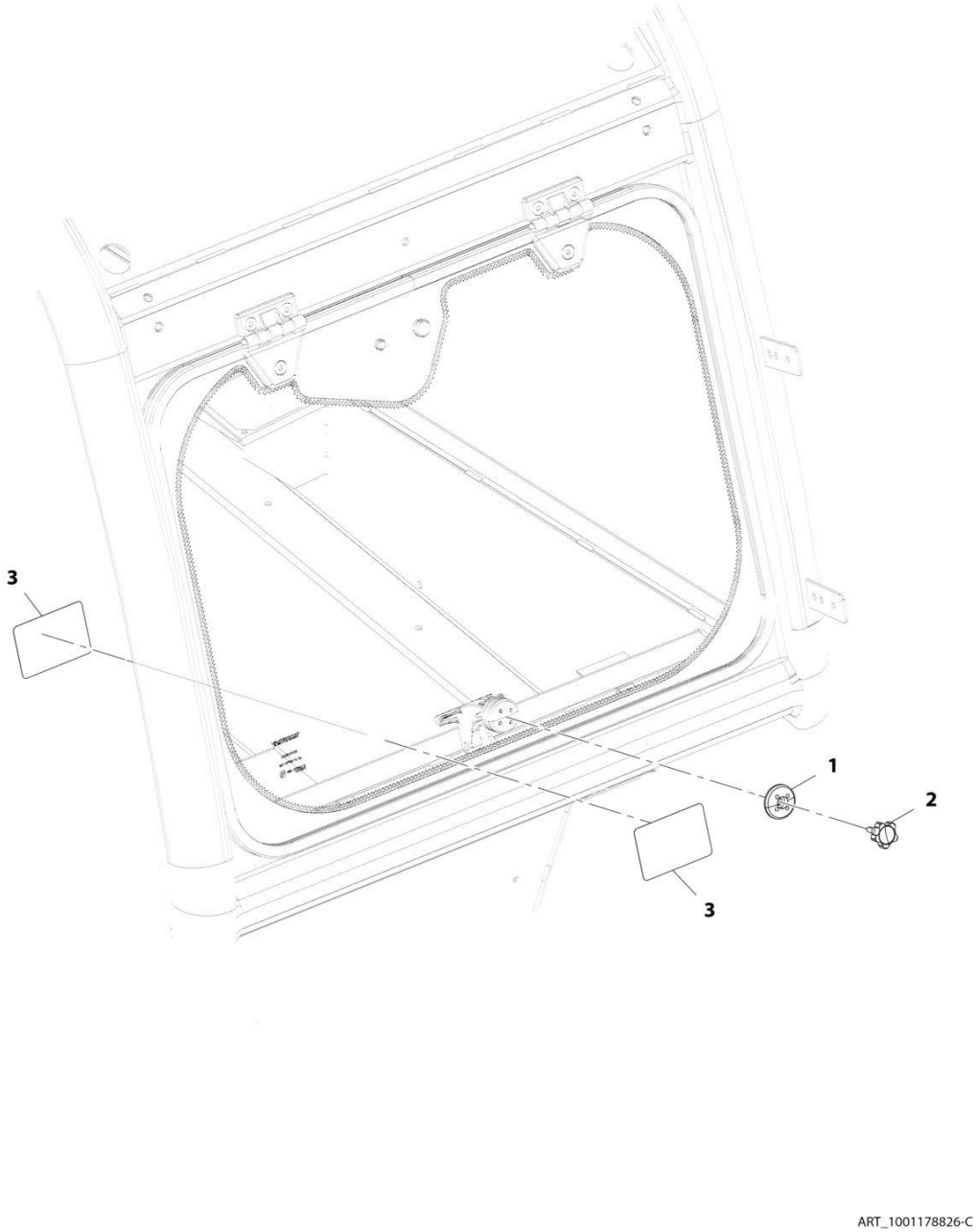

FIGURE 6-70. EXTERNAL WINDOW RELEASE INSTALLATION (CAN & ISO)

ITEM	PART NUMBER	QTY	DESCRIPTION	REV
	1001178826	Ref	External Window Release Installation (English/French)	C
1	1001179008	1	Cap, Latch Window	
2	1001179009	1	Knob	
3	1001204709	2	Decal, Emergency Exit (English/French)	

FIGURE 6-71. ARMREST

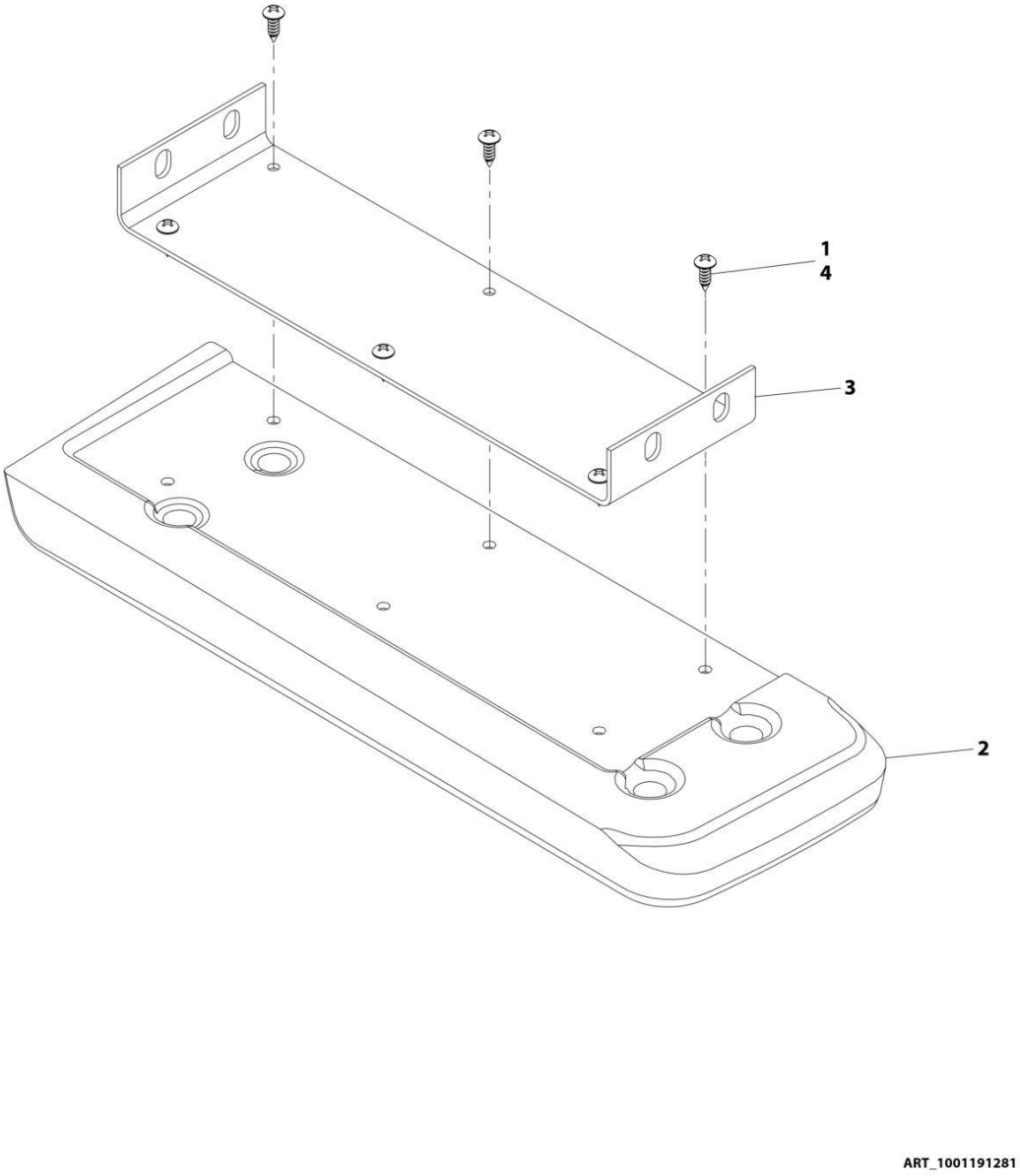

FIGURE 6-71. ARMREST

ITEM	PART NUMBER	QTY	DESCRIPTION	REV
	1001191281	Ref	Armrest	E
1	1001095650	AR	Adhesive	
2	1001179484	1	Armrest, Cab	
3	1001191282	1	Bracket, Armrest Pad	
4	1001192240	6	Screw	

FIGURE 6-72. FIXED ARMREST BRACKET

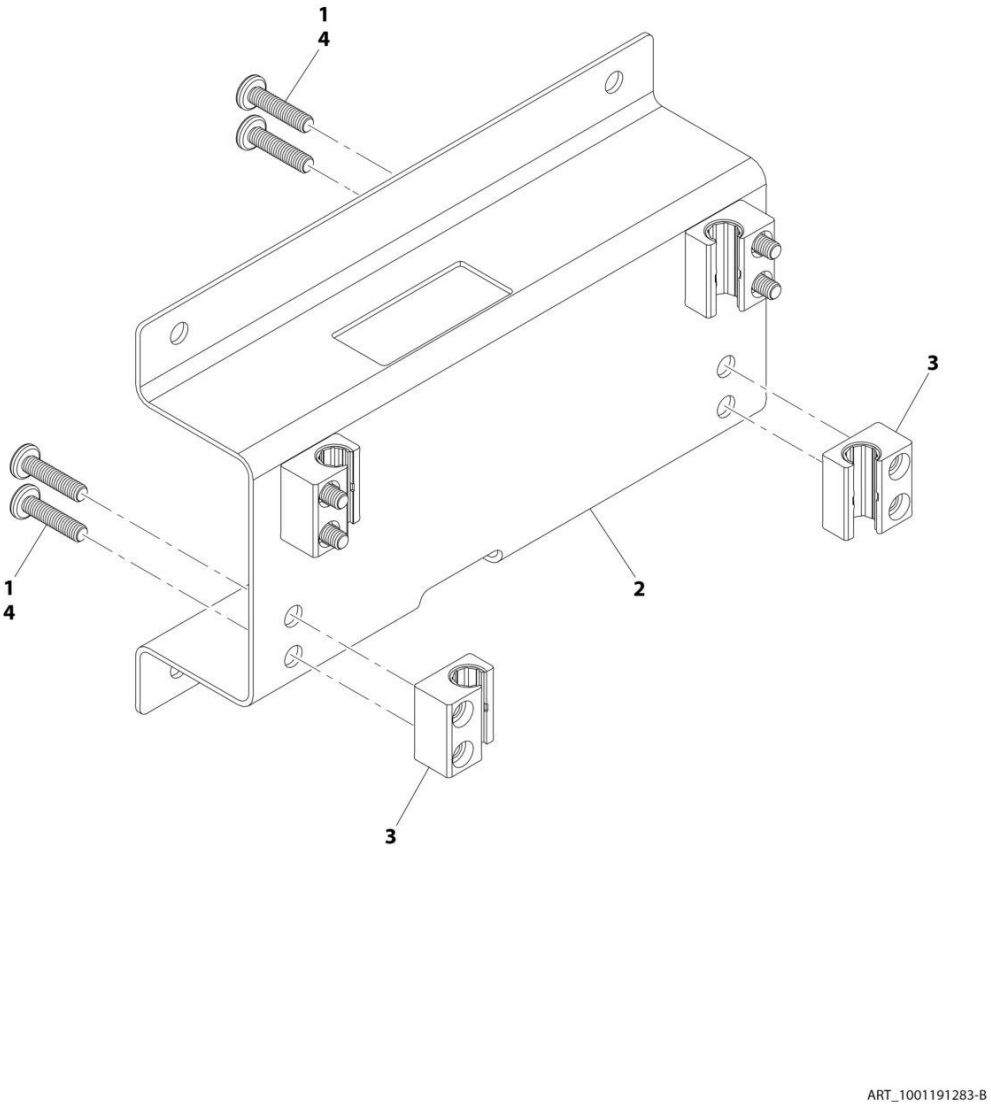

FIGURE 6-72. FIXED ARMREST BRACKET

ITEM	PART NUMBER	QTY	DESCRIPTION	REV
	1001191283	Ref	Fixed Armrest Bracket	B
1	1001095650	AR	Adhesive	
2	1001183597	1	Armrest Bracket	
3	1001191310	4	Slide Block	
4	4010612002	8	Screw	

FIGURE 6-73. MOVING ARMREST BRACKET

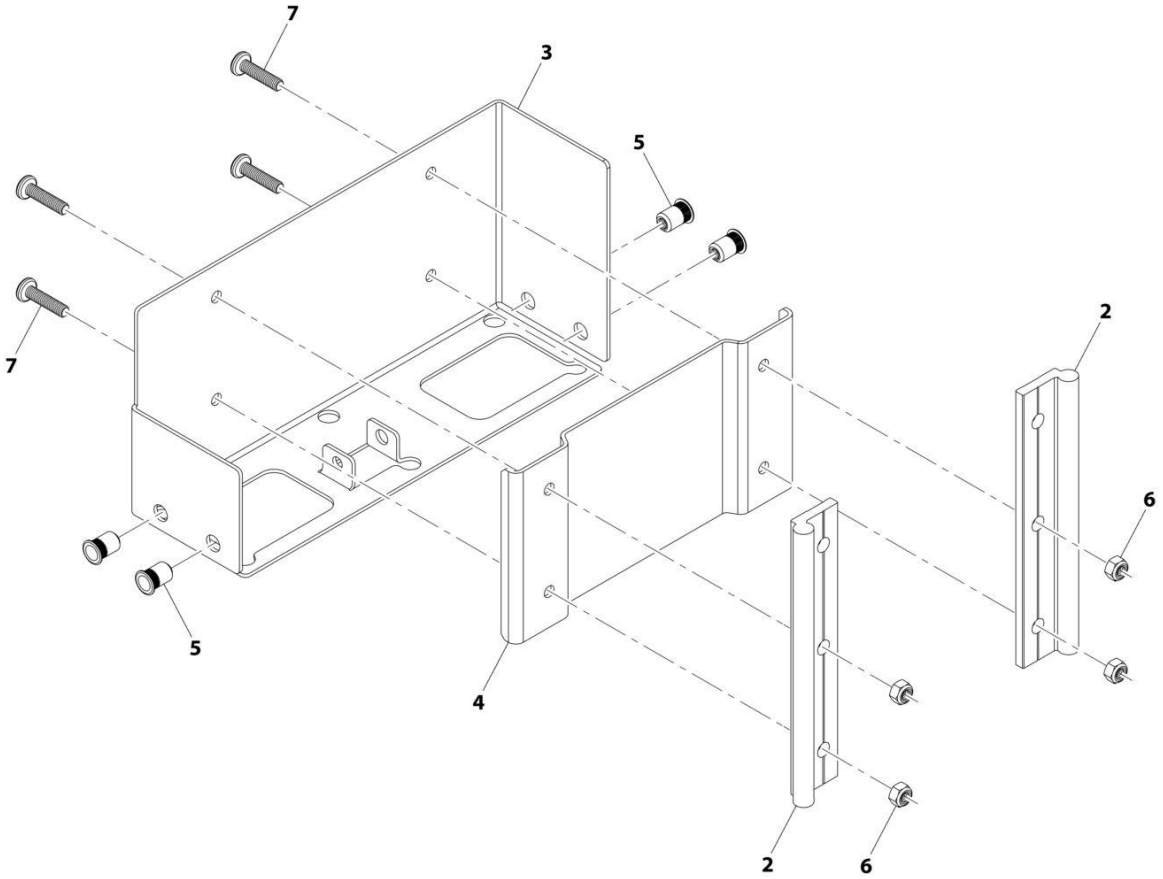

ART_1001191284-B

FIGURE 6-73. MOVING ARMREST BRACKET

ITEM	PART NUMBER	QTY	DESCRIPTION	REV
	1001191284	Ref	Moving Armrest Bracket	B
2	1001191311	2	Side Rail	
3	1001191312	1	Armrest Mount Bracket	
4	1001191313	1	Spacer Block Plate	
5	1001191959	4	Rivenut M6 X 1	
6	3290605	4	Nut, Lock M6X1	
7	4010612002	4	Screw, M6X25	

SECTION 7 - CONTROLS

FIGURE 7-1. ACCELERATOR PEDAL INSTALLATION

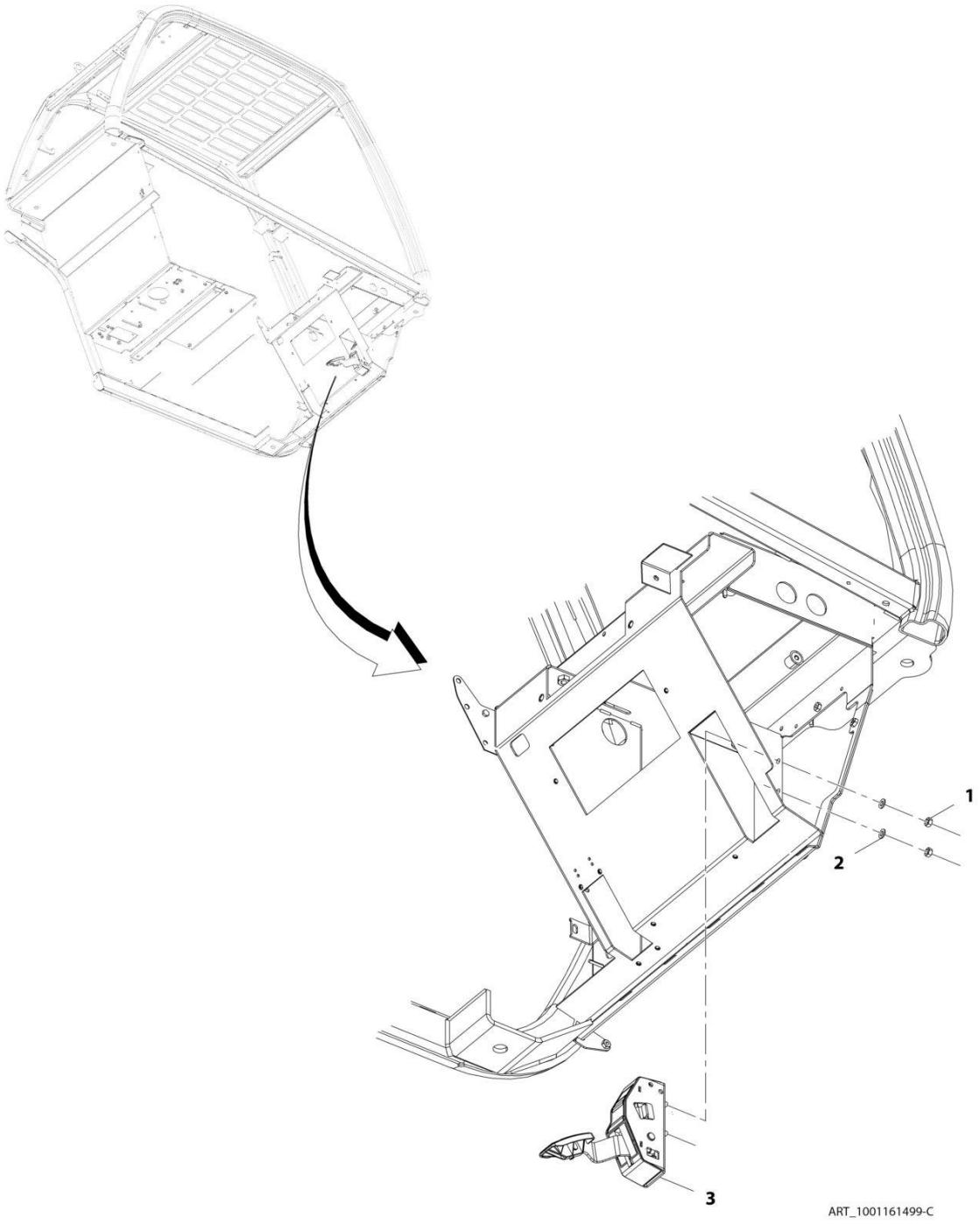

FIGURE 7-1. ACCELERATOR PEDAL INSTALLATION

ITEM	PART NUMBER	QTY	DESCRIPTION	REV
	1001161499	Ref	Accelerator Pedal Installation	C
1	3290801	2	Nut, M8X1.25	
2	4811900	2	Washer, M8	
3	1001159028	1	Pedal, Accelerator (See Separate Breakdown in this Section)	

FIGURE 7-2. ACCELERATOR PEDAL

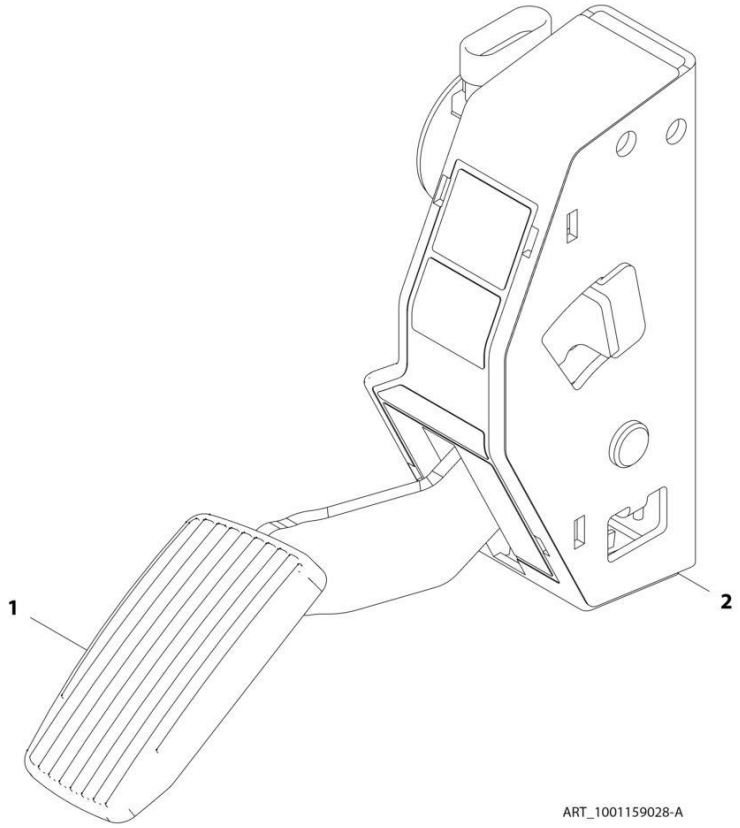

FIGURE 7-2. ACCELERATOR PEDAL

ITEM	PART NUMBER	QTY	DESCRIPTION	REV
	1001159028	Ref	Accelerator Pedal	A
1	70025816	1	Pad, Rubber	
2	70025817	1	Cover, Rubber	

FIGURE 7-3. BRAKE PEDAL INSTALLATION

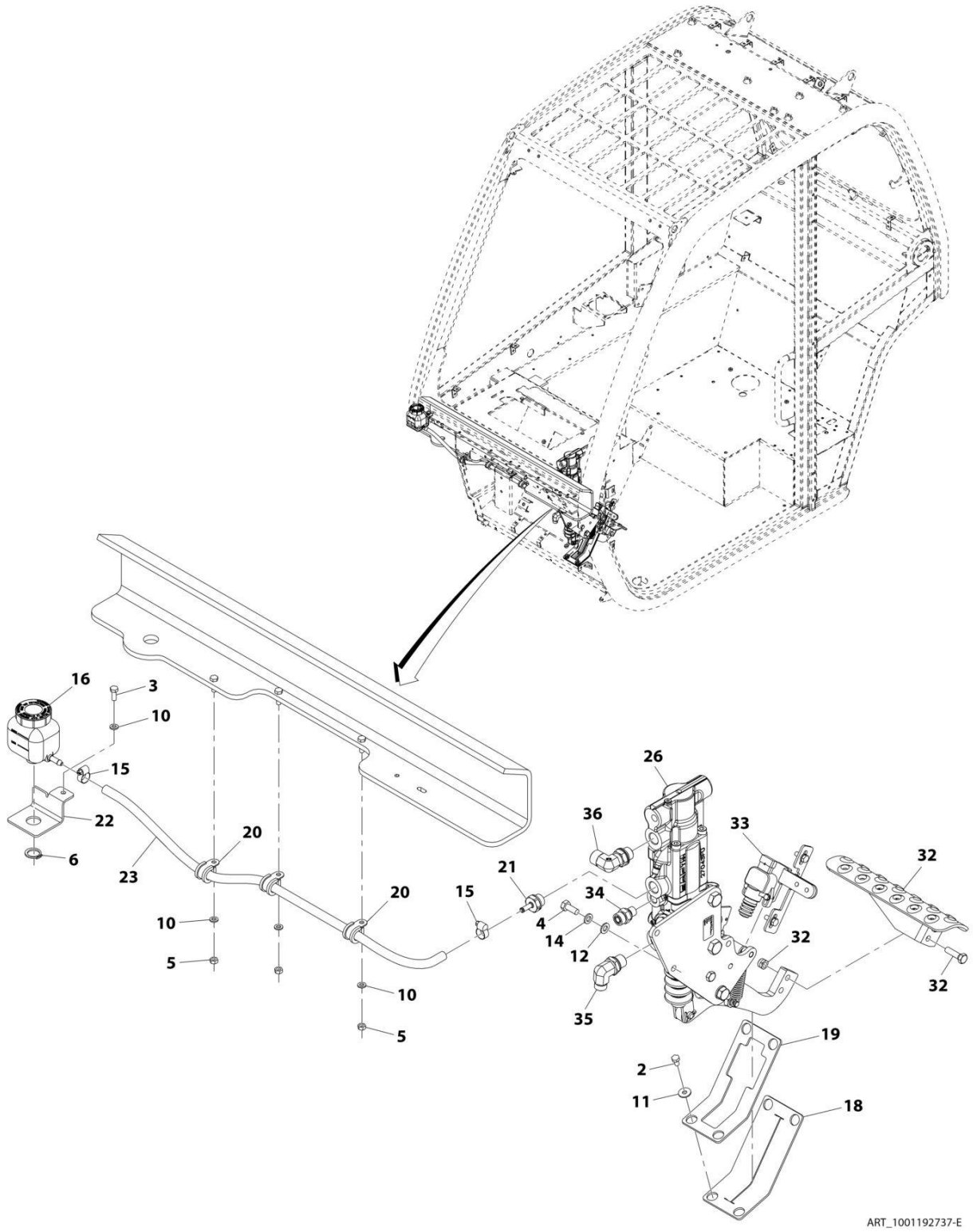

FIGURE 7-3. BRAKE PEDAL INSTALLATION

ITEM	PART NUMBER	QTY	DESCRIPTION	REV
	1001192737	Ref	Brake Pedal Installation	E
2	0760605	4	Bolt, M6X10	
3	0760608	1	Bolt, M6X16	
4	0760810	3	Bolt, M8X20	
5	3290601	3	Nut, M6X1	
6	3760348	1	Ring, Retaining	
10	4811700	4	Washer, M6	
11	4811702	4	Washer, M6	
12	4811900	3	Washer, M8	
14	4831900	3	Washer, Lock M8	
15	8405009	2	Clamp	
16	1001214220	1	Reservoir, Brake	
18	1001162920	1	Seal	
19	1001162922	1	Plate	
20	1001170231	3	Clip	
21	1001171874	1	Fitting, Straight	
22	1001172088	1	Bracket	
23	1001172094	1	Hose	
26	1001213265	1	Assembly, Brake Pedal (See Separate Breakdown in this Section)	
32	1001197139	1	Plate, Brake Pedal	
33	1001205061	Ref	Installation, Brake Sensor (See Separate Breakdown in this Section)	
34	80233218	1	Fitting, Straight ORFS	
35	80333151	1	Fitting, 90 ORFS	
36	1001168054	1	Fitting, 90 ORFS	

FIGURE 7-4. BRAKE PEDAL ASSEMBLY

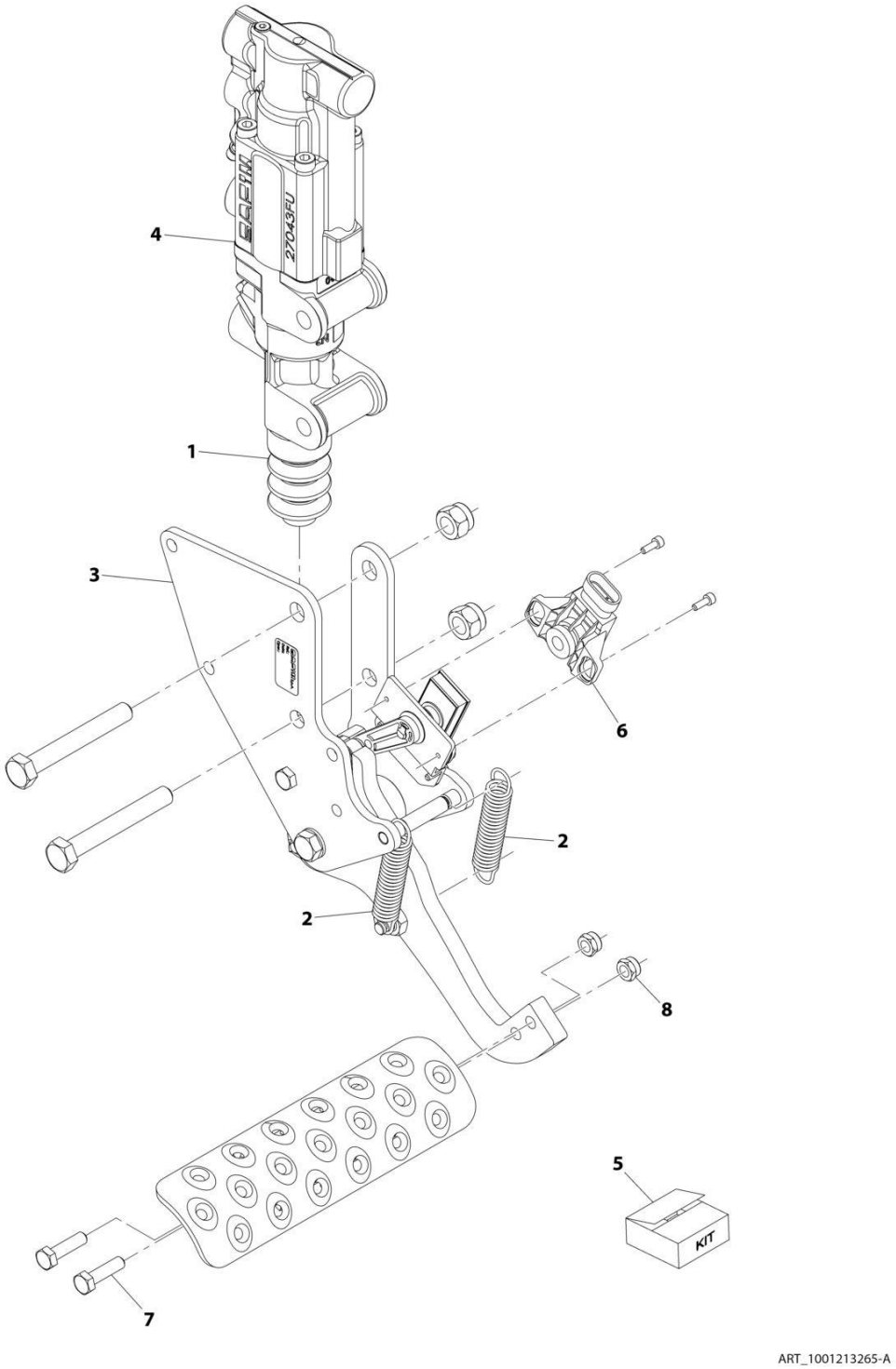

FIGURE 7-4. BRAKE PEDAL ASSEMBLY

ITEM	PART NUMBER	QTY	DESCRIPTION	REV
	1001213265	Ref	Brake Pedal Assembly	A
1	70025859	1	Cover, Dust	
2	70025860	2	Spring, Return	
3	70028381	1	Support, Pedal	
4	70028382	1	Cylinder, Master	
5	70026434	1	Kit, Seal	
6	70028383	1	Sensor, Angle	
7	0770814	2	Bolt, M8X30 Grade 10.9	
8	3290805	2	Nut, Lock M8X1.25 Grade 8	

FIGURE 7-5. BRAKE SENSOR INSTALLATION

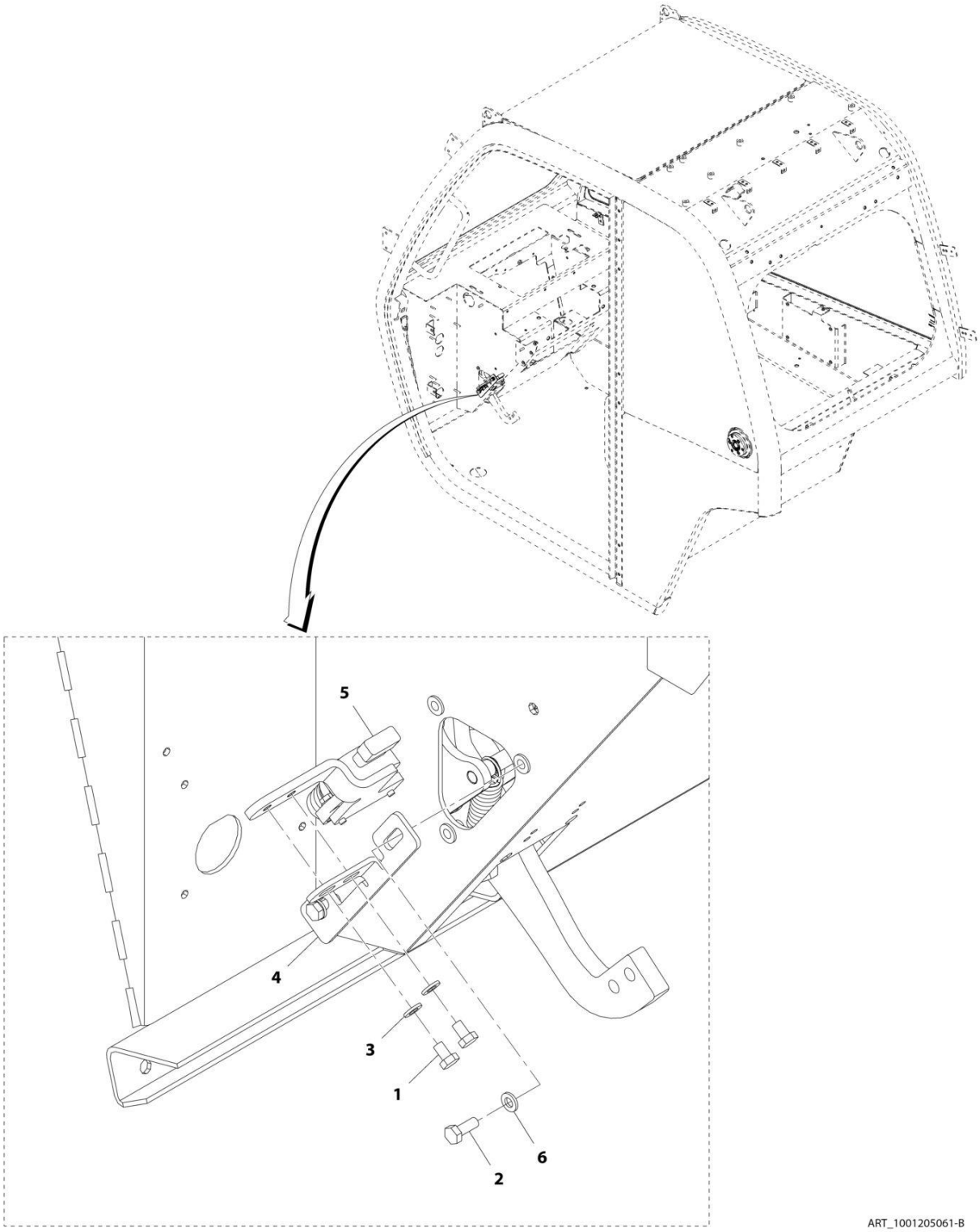

FIGURE 7-5. BRAKE SENSOR INSTALLATION

ITEM	PART NUMBER	QTY	DESCRIPTION	REV
	1001205061	Ref	Brake Sensor Installation	B
1	0760605	2	Bolt, M6X10	
2	0760608	2	Bolt, M6X16	
3	4811700	2	Washer, M6	
4	1001201499	1	Plate, Switch Adjustment	
5	1001201501	1	Assembly, Switch Plate (See Separate Breakdown in this Section)	
6	4811702	2	Washer, M6	

FIGURE 7-6. SWITCH PLATE ASSEMBLY

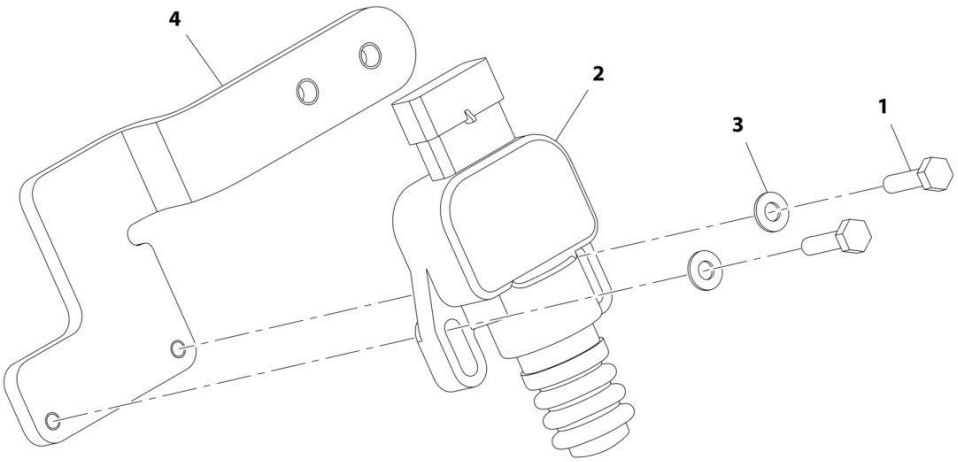

ART_1001201501-A

FIGURE 7-6. SWITCH PLATE ASSEMBLY

ITEM	PART NUMBER	QTY	DESCRIPTION	REV
	1001201501	Ref	Switch Plate Assembly	A
1	0700408	2	Bolt, M4X16	
2	4360658	1	Sensor, Brake	
3	4811400	2	Washer, M4	
4	1001201500	1	Plate	

FIGURE 7-7. TILT STEERING COLUMN INSTALLATION

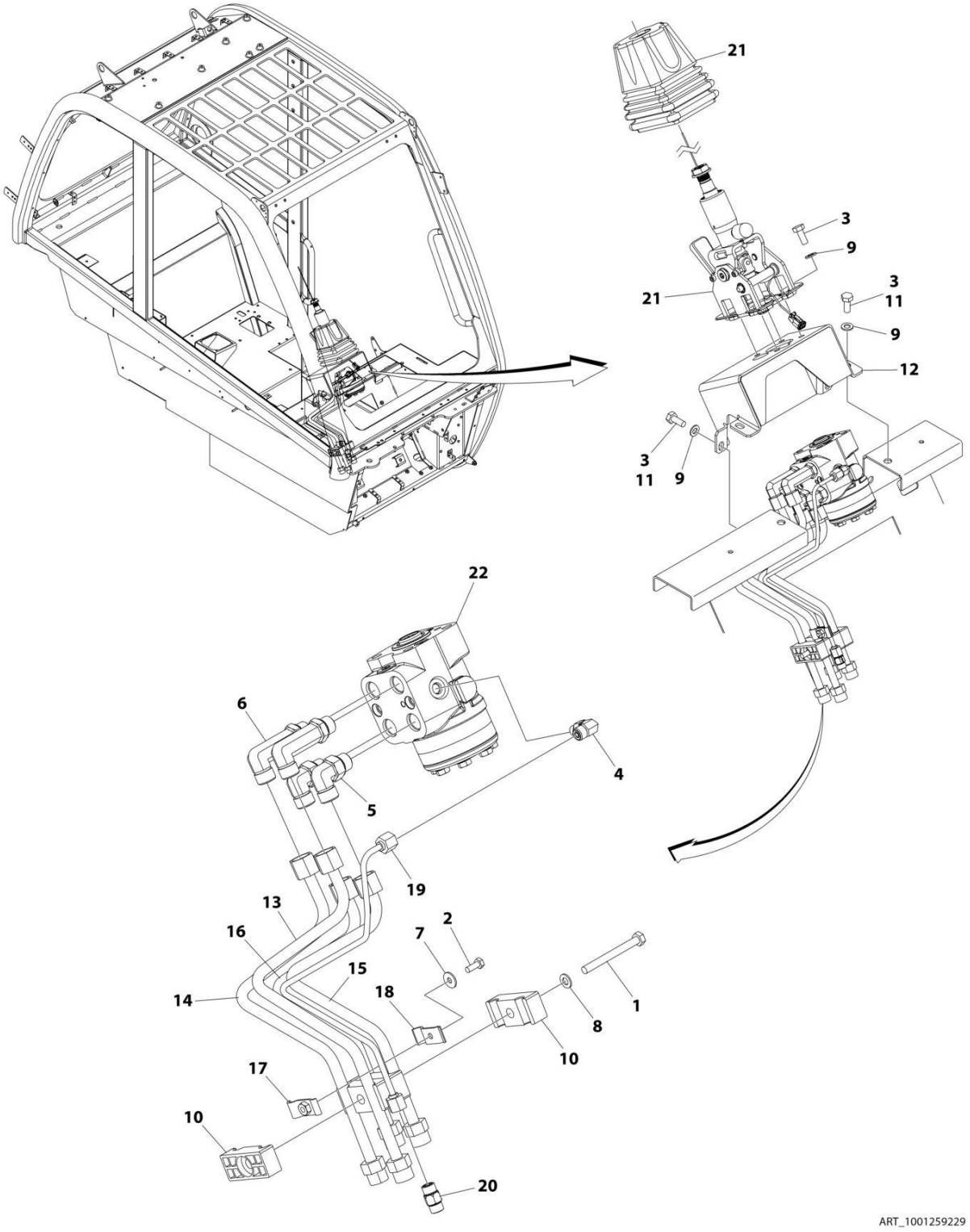

FIGURE 7-7. TILT STEERING COLUMN INSTALLATION

ITEM	PART NUMBER	QTY	DESCRIPTION	REV
	1001259229	Ref	TILT STEERING COLUMN INSTALLATION	C
1	0700824	1	Bolt M8 x 80	
2	0760608	1	Bolt M6 x 16	
3	0761012	8	Bolt M10 x 25	
4	2130404	1	Fitting, 90 ORFS	
5	2130808	2	Fitting, 90 ORFS	
6	2170208	2	Fitting, 90 ORFS	
7	4811702	1	Washer M6	
8	4811900	1	Washer M8	
9	4812000	8	Washer M10	
10	1001004640	4	Clamp	
11	1001095650	AR	Adhesive	
12	1001156265	1	Bracket, Support	
13	1001161672	1	Pipe	
14	1001161896	1	Pipe	
15	1001161897	1	Pipe	
16	1001161898	1	Pipe	
17	1001168142	1	Bracket	
18	1001168151	1	Bracket	
19	1001194282	1	Pipe	
20	1001227945	1	Valve, Check	
21	1001257330	1	Column, Tilt Steering	
22	1001259109	1	Valve, Steer	

FIGURE 7-8. COLUMN SHIFT INSTALLATION (2 SPEED)

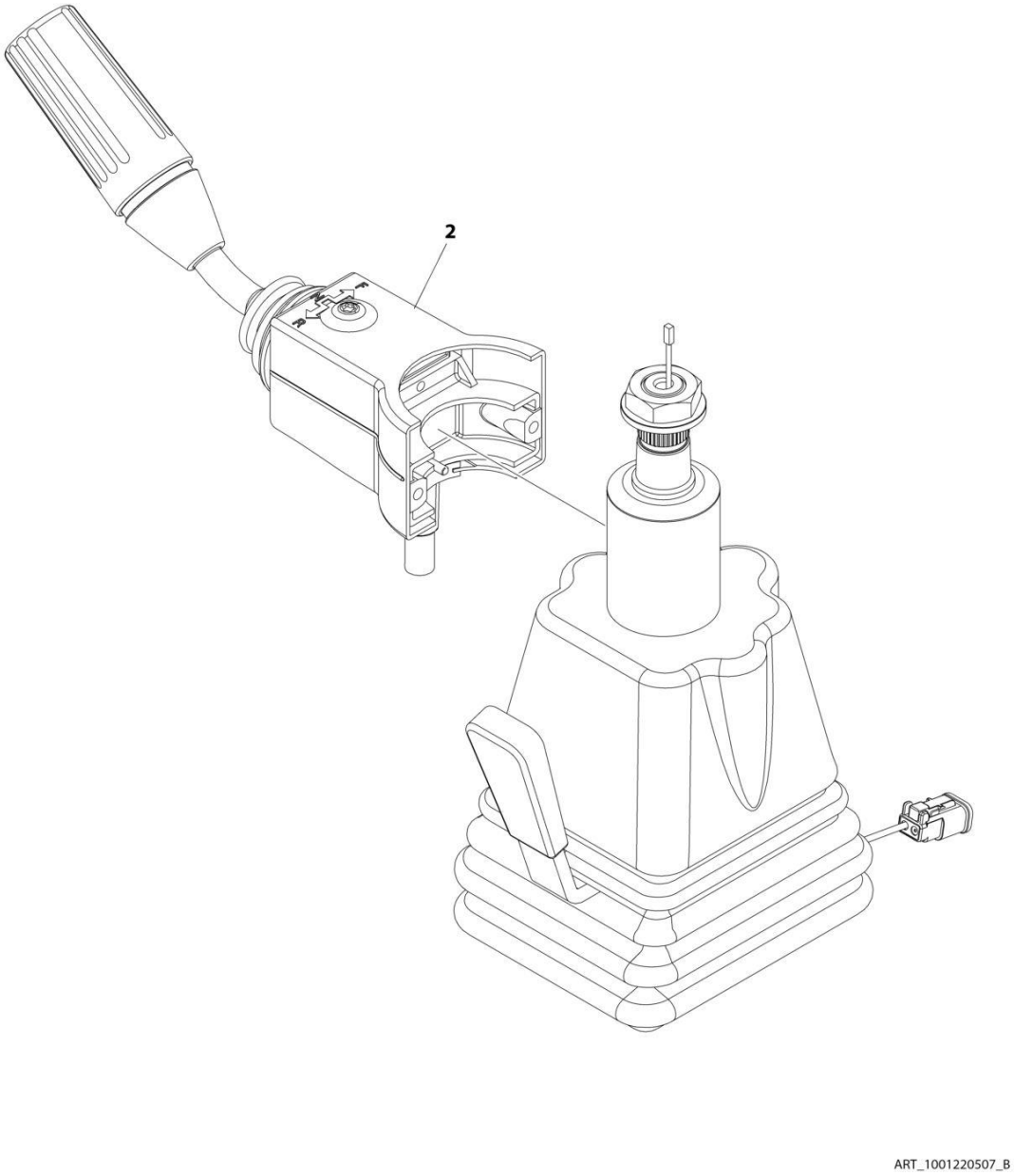

FIGURE 7-8. COLUMN SHIFT INSTALLATION (2 SPEED)

ITEM	PART NUMBER	QTY	DESCRIPTION	REV
	1001220507	Ref	Column Shift Installation (2 Speed)	B
2	1001257088	1	Lever, FNR (2 Speed)	

FIGURE 7-9. STEERING WHEEL INSTALLATION

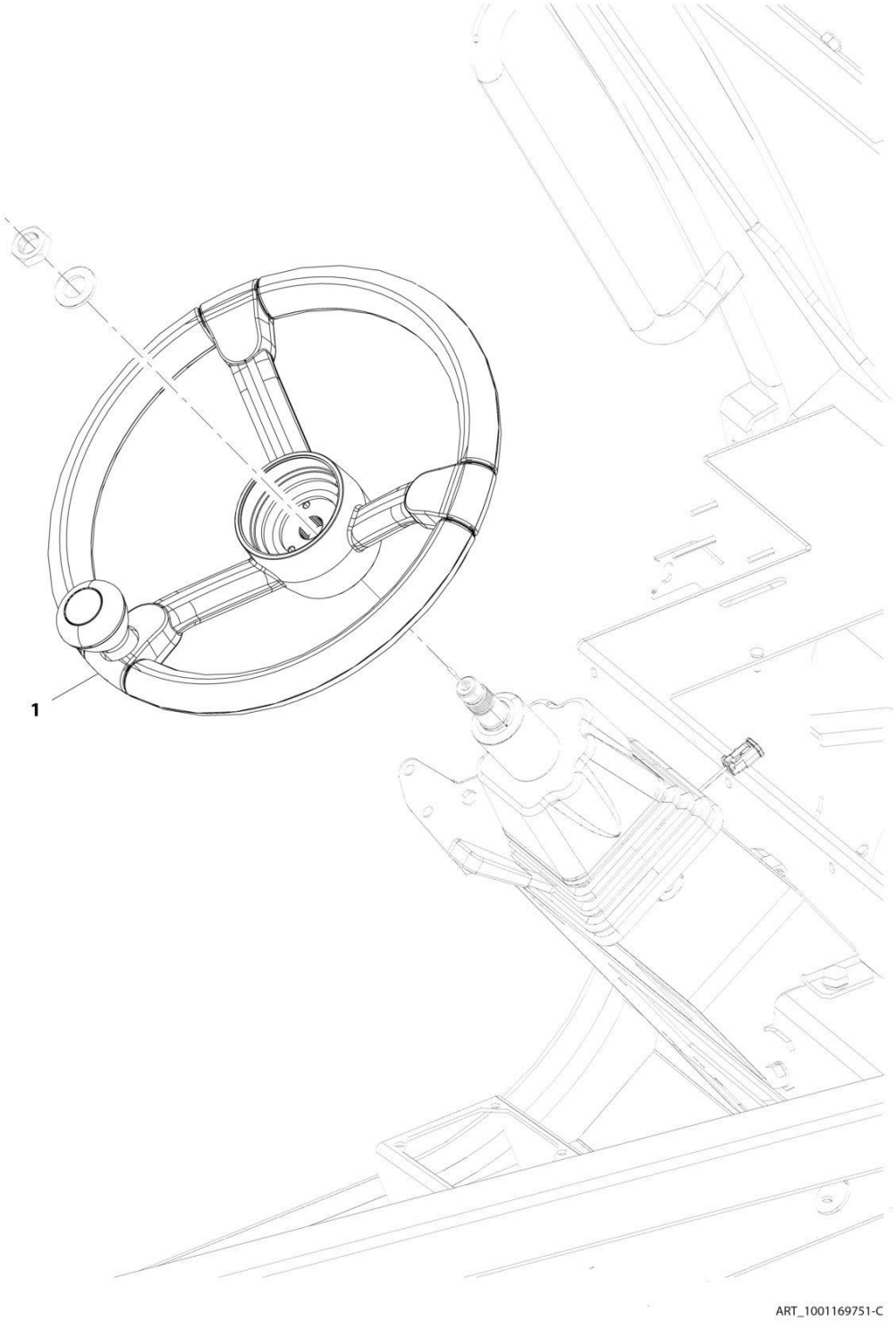

FIGURE 7-9. STEERING WHEEL INSTALLATION

ITEM	PART NUMBER	QTY	DESCRIPTION	REV
	1001169751	Ref	Steering Wheel Installation	C
1	1001169354	1	Wheel, Steering (See Separate Breakdown in this Section)	

FIGURE 7-10. STEERING WHEEL

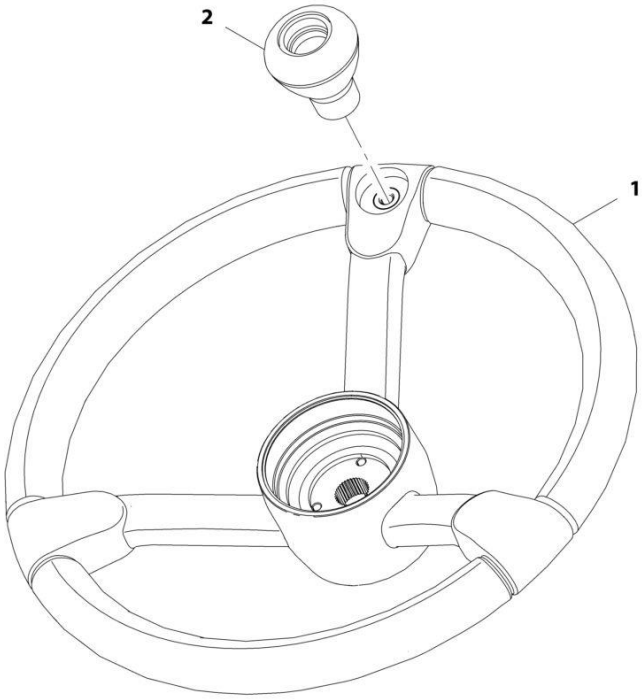

ART_1001169354-D

FIGURE 7-10. STEERING WHEEL

ITEM	PART NUMBER	QTY	DESCRIPTION	REV
	1001169354	Ref	Steering Wheel	D
1	1001169367	1	Wheel, Steering	
2	1001169355	1	Handle, Steer Spinner	

FIGURE 7-11. HORN BUTTON INSTALLATION

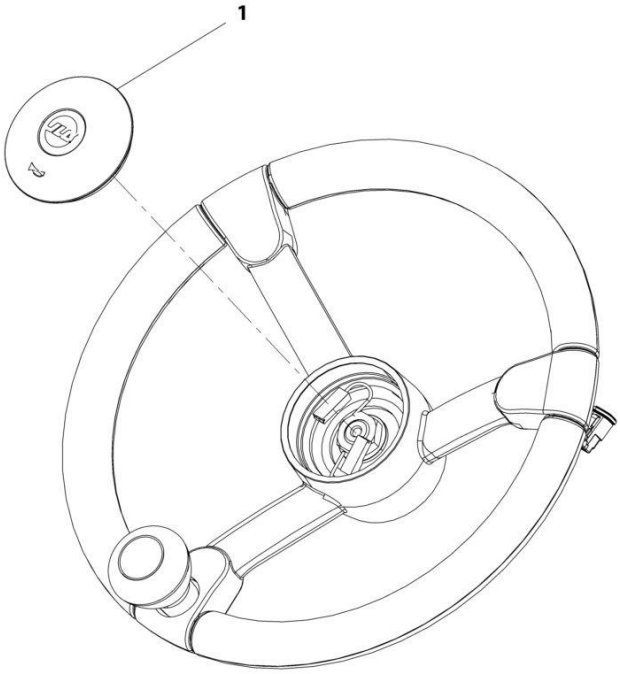

ART_1001169763-A

FIGURE 7-11. HORN BUTTON INSTALLATION

ITEM	PART NUMBER	QTY	DESCRIPTION	REV
	1001169763	Ref	Horn Button Installation	A
1	1001169268	1	Button, Horn	

FIGURE 7-12. JOYSTICK INSTALLATION (2 SPEED)

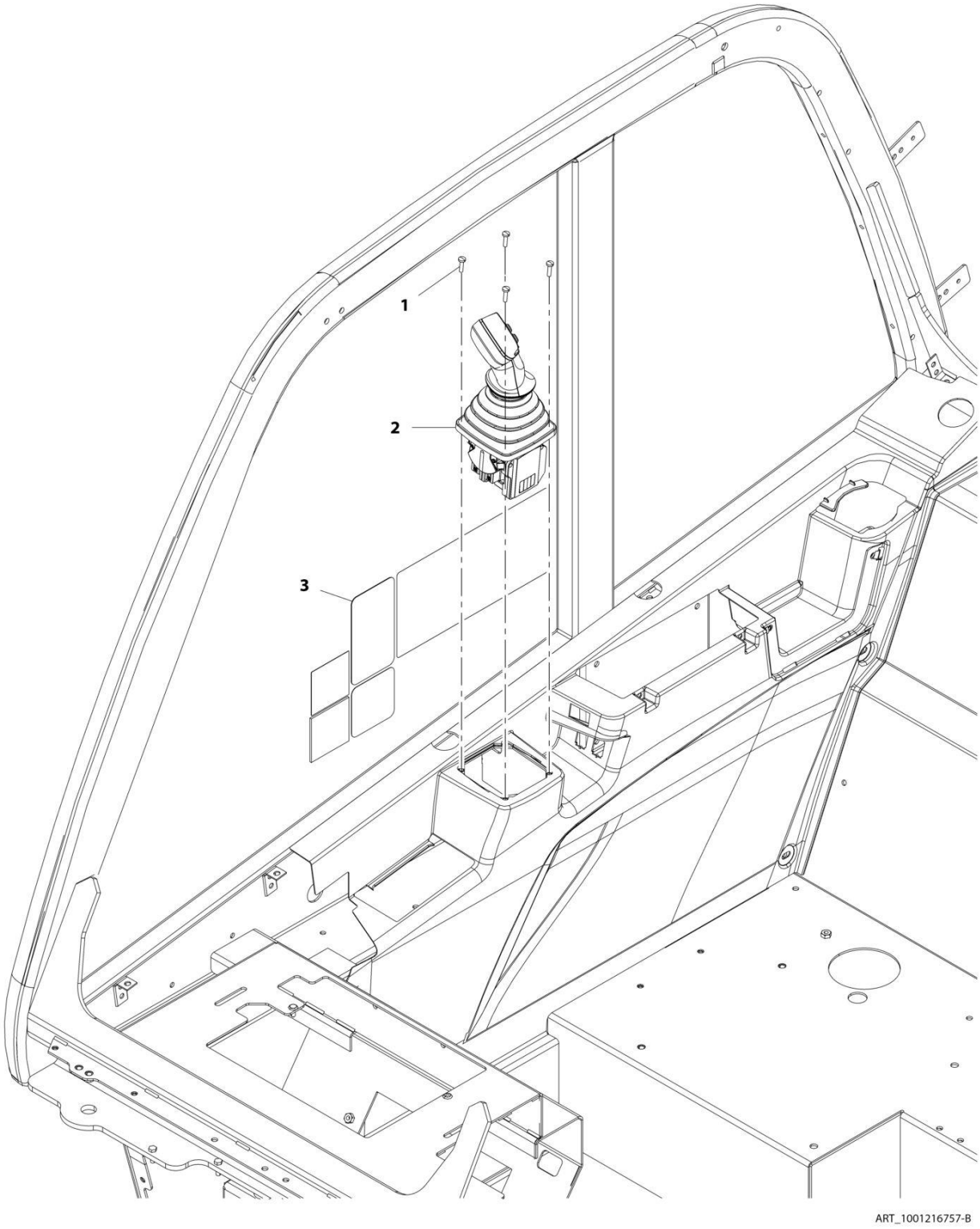

FIGURE 7-12. JOYSTICK INSTALLATION (2 SPEED)

ITEM	PART NUMBER	QTY	DESCRIPTION	REV
	1001216757	Ref	Joystick Installation (2 Speed)	C
1	4010510	4	Screw, M5X20	
2	1001222606	1	Joystick, 2R2B	
3	1001216803	1	Decal	

FIGURE 7-13. WIPER-TURN SWITCH

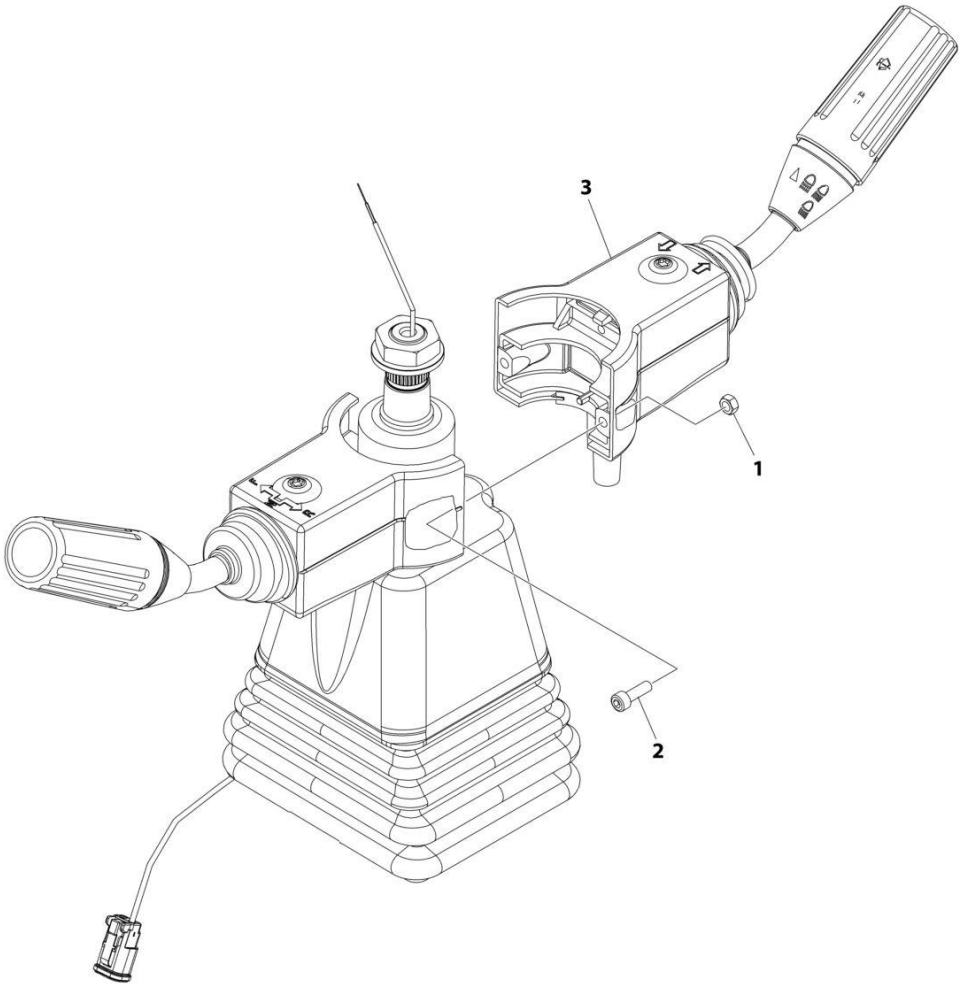

ART_1001257071

FIGURE 7-13. WIPER-TURN SWITCH

ITEM	PART NUMBER	QTY	DESCRIPTION	REV
	1001257071	Ref	Wiper-Turn Switch Installation	B
1	3290505	2	Nut, Lock M5	
2	4031607	2	Capscrew M5 x 16	
3	1001256974	1	Switch, Turn-Wiper	

FIGURE 7-14. COLUMN CLAMP INSTALLATION

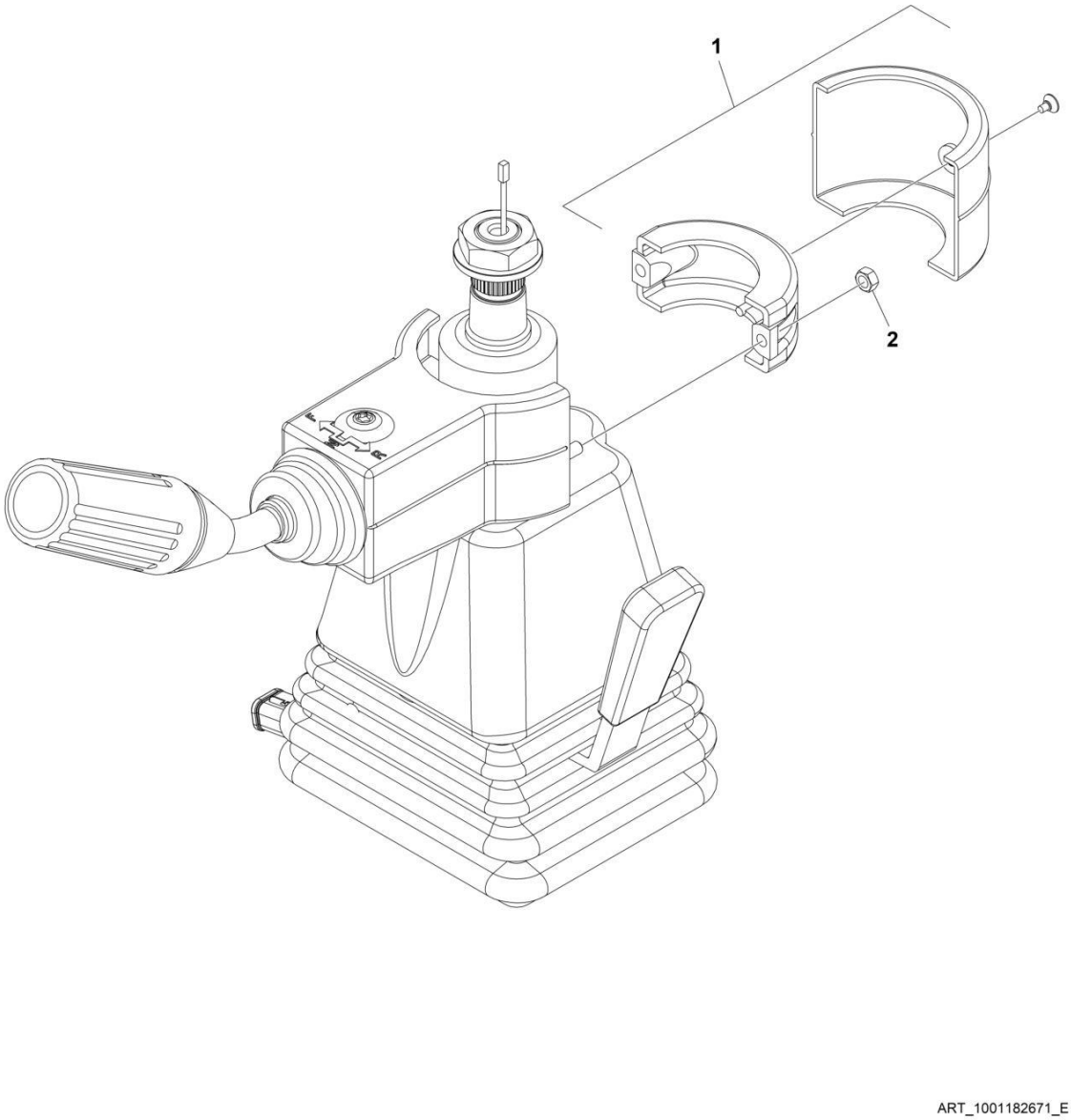

FIGURE 7-14. COLUMN CLAMP INSTALLATION

ITEM	PART NUMBER	QTY	DESCRIPTION	REV
	1001182671	Ref	Column Clamp Installation	E
1	1001146949	1	Clamp	
2	3290505	2	Nut, Lock M5	

SECTION 8 - HYDRAULIC CIRCUITS

FIGURE 8-1. BOOM HYDRAULIC INSTALLATION

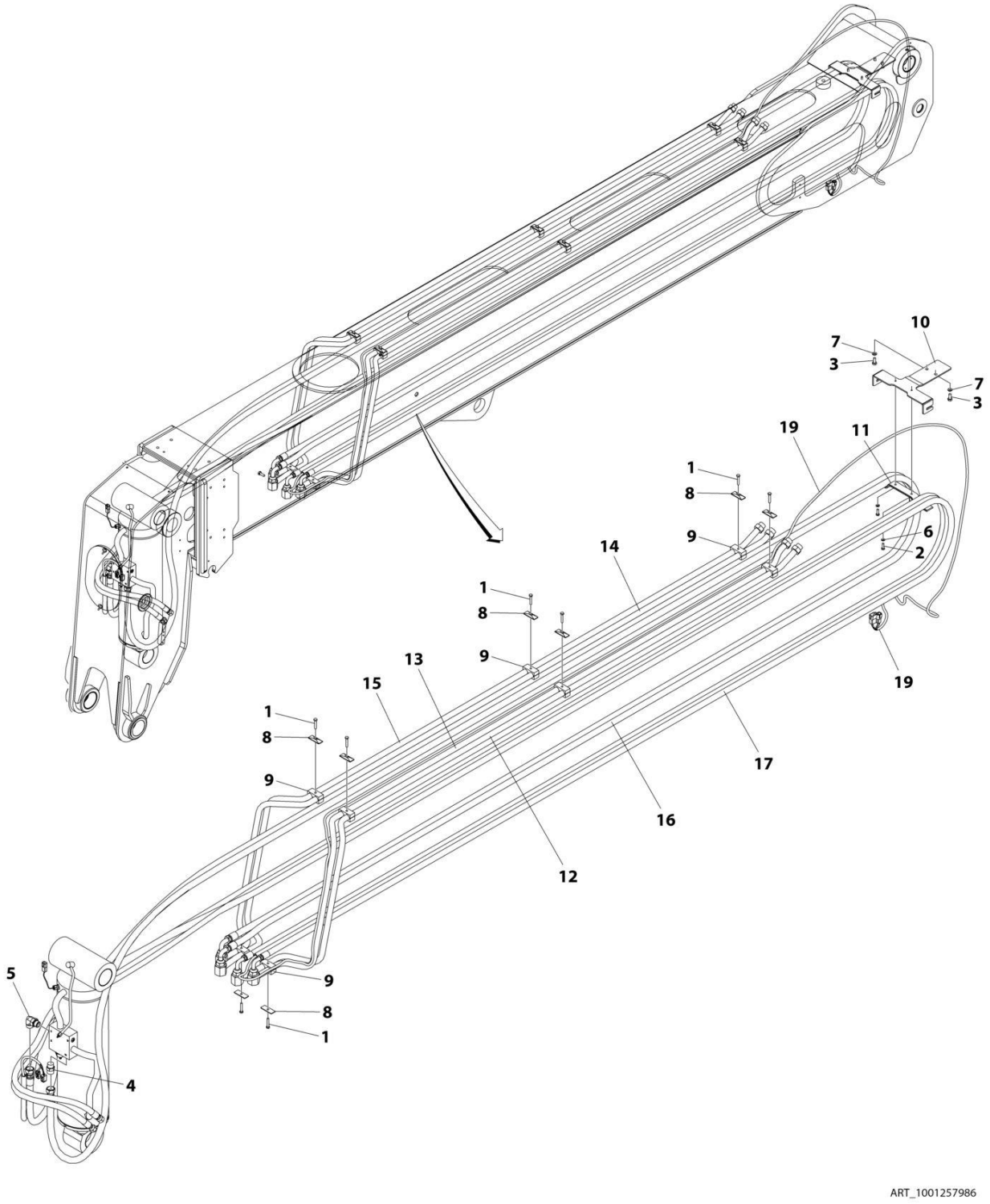

FIGURE 8-1. BOOM HYDRAULIC INSTALLATION

ITEM	PART NUMBER	QTY	DESCRIPTION	REV
	1001257986	Ref	BOOM HYDRAULIC INSTALLATION	B
1	0700817	8	Bolt M8 x 45	
2	0760812	2	Bolt M8 x 25	
3	0761012	2	Bolt M10 x 25	
4	2111212	1	Fitting, Straight ORFS	
5	2131212	1	Fitting, 90 ORFS	
6	4811900	2	Washer M8	
7	4812000	2	Washer M10	
8	77133137	8	Plate, Twin Hose Cover	
9	77133279	8	Clamp Set	
10	1001232766	1	Support, Hose	
11	1001232770	1	Plate, Support	
12	1001258101	1	Pipe	
13	1001258102	1	Pipe	
14	1001258103	1	Pipe	
15	1001258104	1	Pipe	
16	1001258105	1	Hose	
17	1001258106	1	Hose	
18	471678	AR	Tie-Strap (Not Shown)	
19	1001268266	1	Harness, Boom to Frame (See Separate Breakdown in ELECTRICAL Section)	

FIGURE 8-2. BOOM HYDRAULIC LINES INSTALLATION

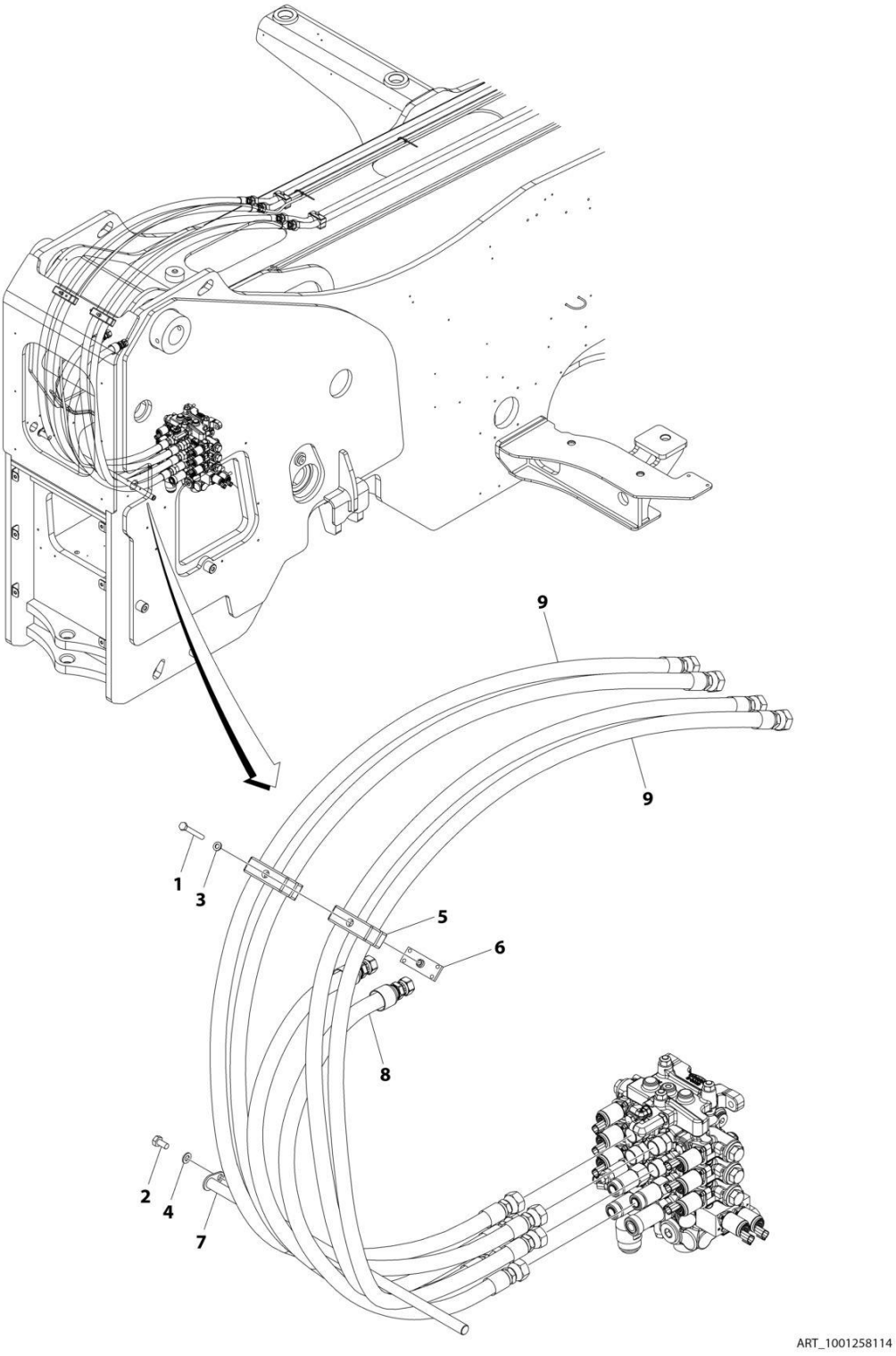

FIGURE 8-2. BOOM HYDRAULIC LINES INSTALLATION

ITEM	PART NUMBER	QTY	DESCRIPTION	REV
	1001258114	Ref	BOOM HYDRAULIC LINES INSTALLATION	A
1	0700823	2	Bolt M8 x 75	
2	0761010	1	Bolt M10 x 20	
3	4811900	2	Washer M8	
4	4812000	1	Washer M10	
5	8750024	2	Clamp Set	
6	8750035	2	Plate	
7	1001247155	1	Bar, Hose Guide Assembly	
8	1001258115	2	Hose	
9	1001258116	4	Hose	

FIGURE 8-3. BOOM AUX HYDRAULIC INSTALLATION (MANUAL - SINGLE)

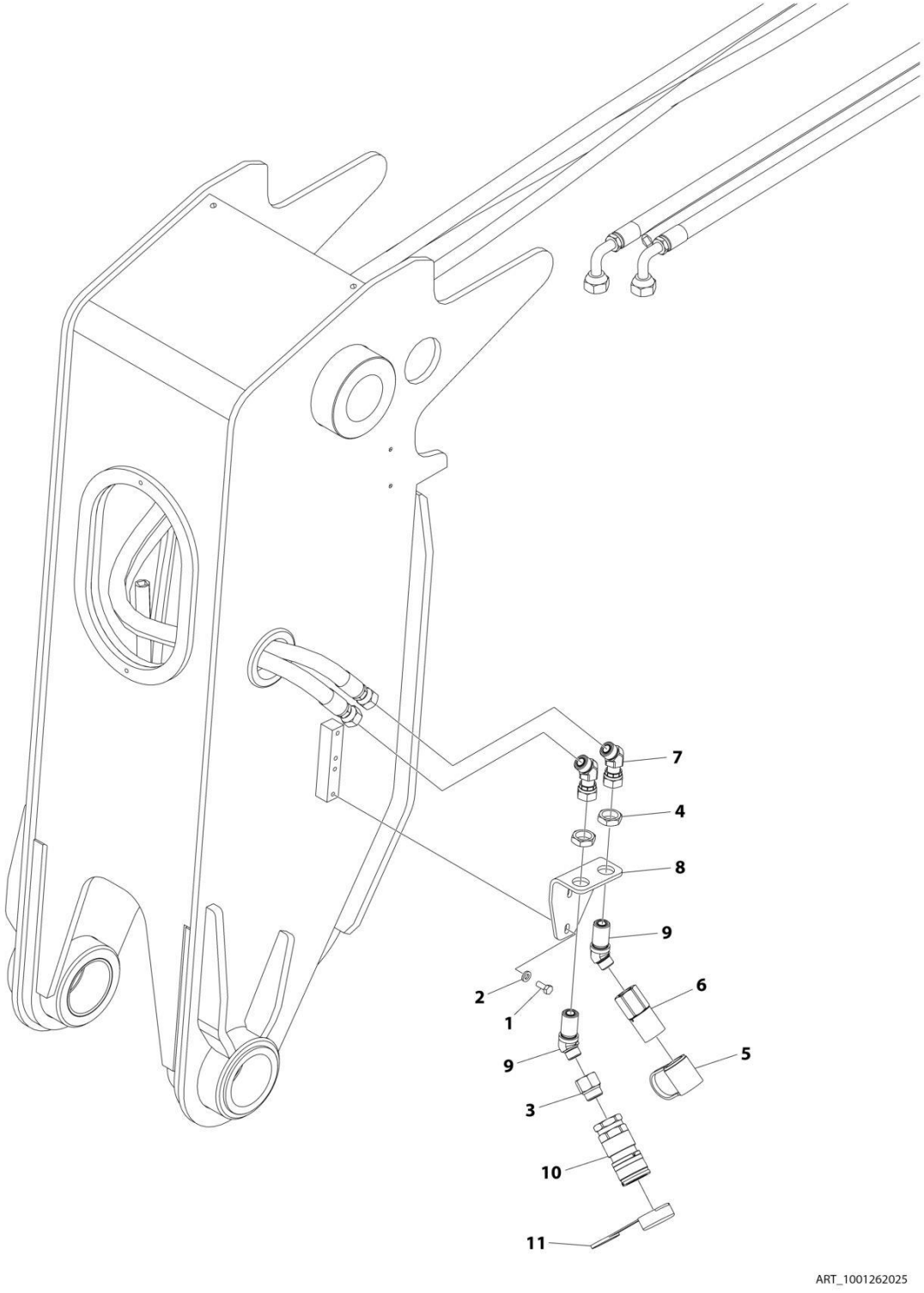

FIGURE 8-3. BOOM AUX HYDRAULIC INSTALLATION (MANUAL - SINGLE)

ITEM	PART NUMBER	QTY	DESCRIPTION	REV
	1001262025	Ref	BOOM AUX HYDRAULIC INSTALLATION (MANUAL - SINGLE)	B
1	0760810	2	Bolt M8 x 20	
2	5240800	2	Washer M8	
3	8760550	1	Fitting, Tee	
4	8770075	2	Fitting, ORFS	
5	1001003474	1	Cap	
6	1001003478	1	Coupling, Female Quick Disconnect	
7	1001147416	2	Fitting, 45 ORFS	
8	1001217552	1	Bracket	
9	1001217553	2	Fitting, 45 ORFS	
10	1001260538	1	Coupling, Female Quick Disconnect	
11	1001264297	1	Plug	

FIGURE 8-4. BOOM AUX HYDRAULIC INSTALLATION (HYDRAULIC - TWIN)

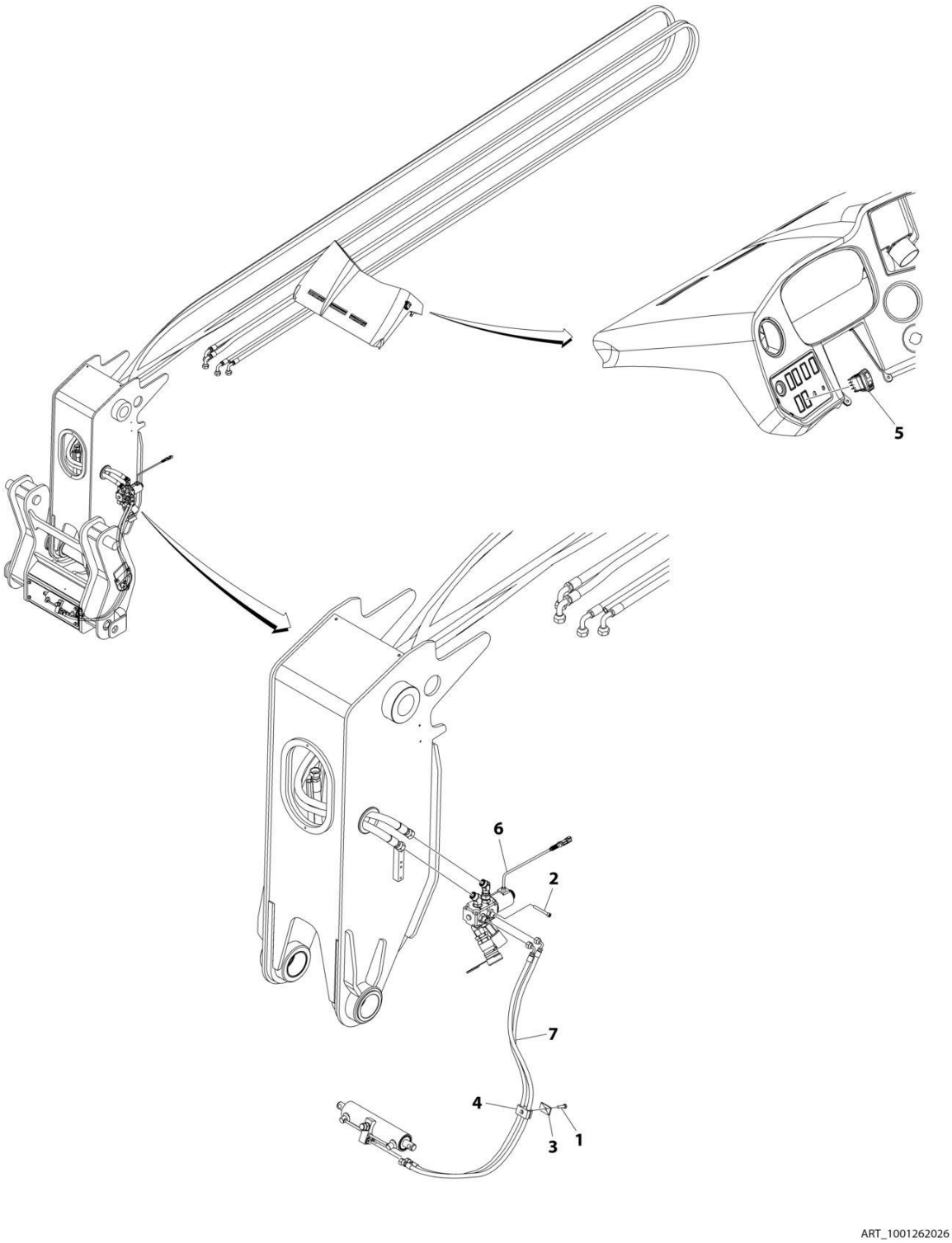

FIGURE 8-4. BOOM AUX HYDRAULIC INSTALLATION (HYDRAULIC - TWIN)

ITEM	PART NUMBER	QTY	DESCRIPTION	REV
	1001262026	Ref	BOOM AUX HYDRAULIC INSTALLATION (HYDRAULIC - TWIN)	A
1	0760815	1	Bolt M8 x 35	
2	4031918	2	Bolt M8 x 70	
3	8769123	1	Plate, Cover	
4	8769126	1	Clamp	
5	1001080375	1	Switch	
6	1001262029	1	Assembly, Diverter Valve (Hydraulic - Twin) (See Separate Breakdown in this Section)	
7	1001262189	2	Hose	

FIGURE 8-5. BOOM AUX HYDRAULIC INSTALLATION (MANUAL - TWIN)

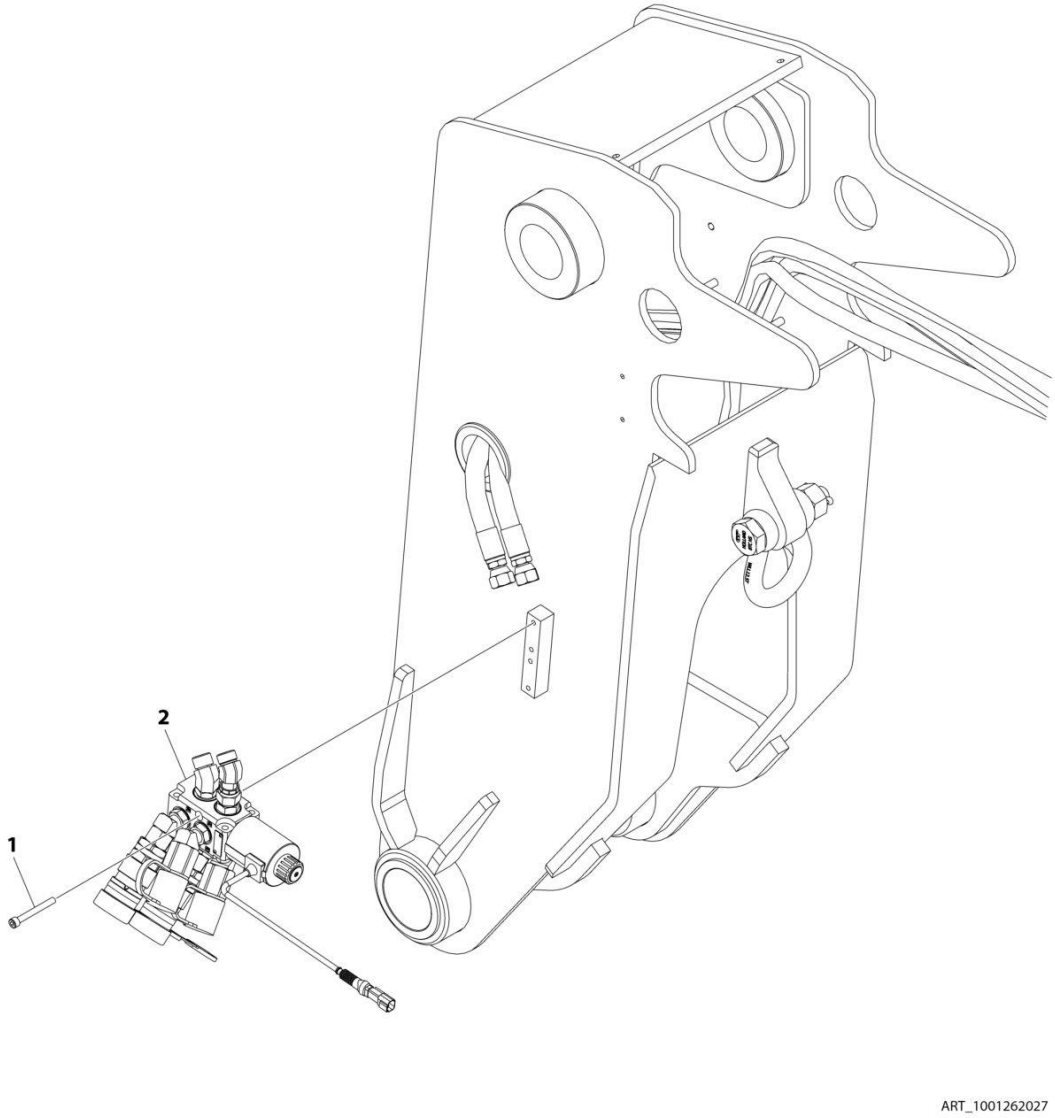

FIGURE 8-5. BOOM AUX HYDRAULIC INSTALLATION (MANUAL - TWIN)

ITEM	PART NUMBER	QTY	DESCRIPTION	REV
	1001262027	Ref	BOOM AUX HYDRAULIC INSTALLATION (MANUAL - TWIN)	A
1	4031918	2	Bolt M8 x 70	
2	1001262030	1	Auxiliary Hydraulic Valve (Manual - Twin) (See Separate Breakdown in this Section)	

FIGURE 8-6. DUAL COUPLER AUX HYDRAULIC INSTALLATION

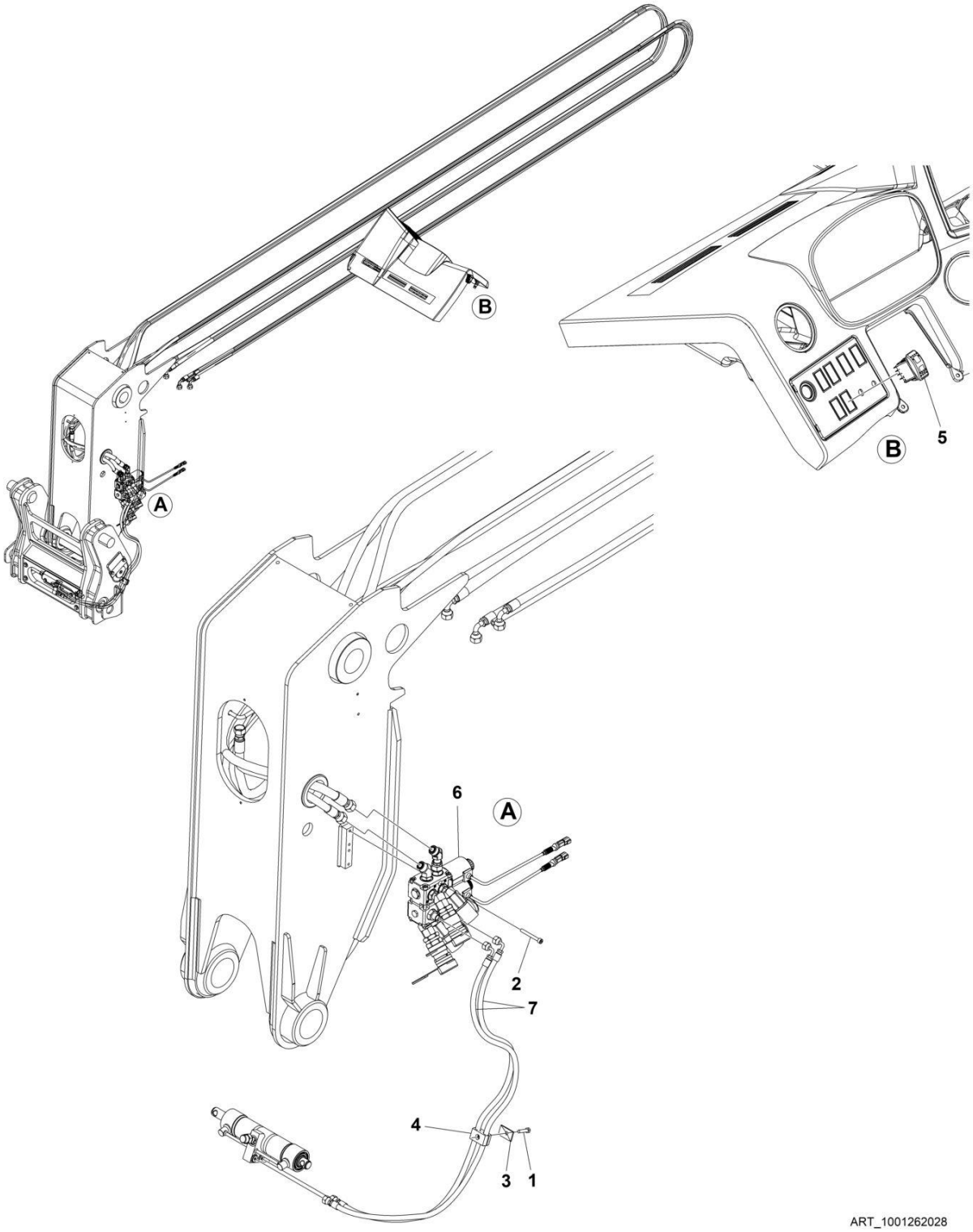

FIGURE 8-6. DUAL COUPLER AUX HYDRAULIC INSTALLATION

ITEM	PART NUMBER	QTY	DESCRIPTION	REV
	1001262028	Ref	DUAL COUPLER AUX HYDRAULIC INSTALLATION	A
1	0760815	1	Bolt, M8 x 35	
2	4031918	3	Bolt, M8 x 70	
3	8769123	1	Plate, Cover	
4	8769126	1	Clamp	
5	1001080375	1	Switch	
6	1001262047	1	Valve Aux Hydraulic Installation (See Separate Breakdown in this Section)	
7	1001262189	2	Hose	

FIGURE 8-7. AUXILIARY HYDRAULIC VALVE INSTALLATION

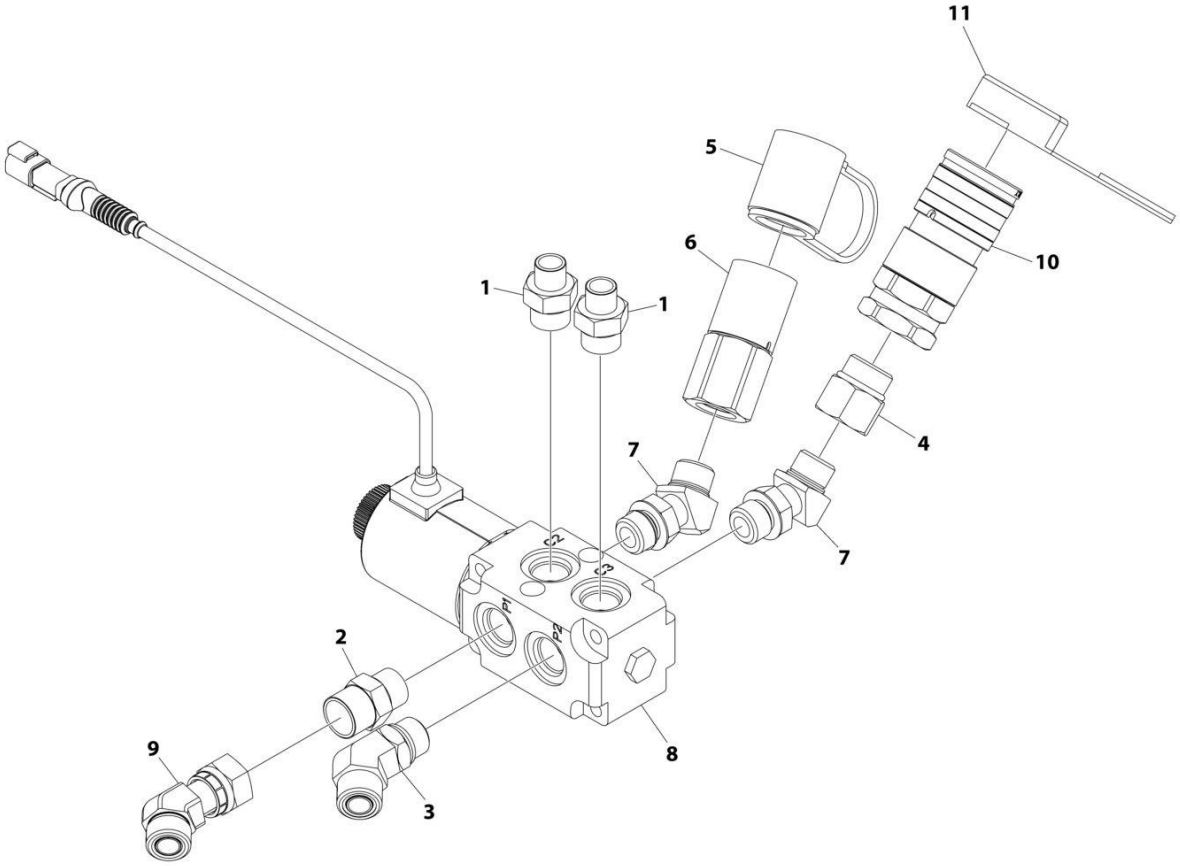

FIGURE 8-7. AUXILIARY HYDRAULIC VALVE INSTALLATION

ITEM	PART NUMBER	QTY	DESCRIPTION	REV
	1001262029	Ref	AUXILIARY HYDRAULIC VALVE INSTALLATION	B
1	2110610	2	Fitting, Straight ORFS	
2	2111010	1	Fitting, Straight ORFS	
3	2151010	1	Fitting, 45 ORFS	
4	8760550	1	Fitting, Tee	
5	1001003474	1	Cap	
6	1001003478	1	Fitting, Female Quick Disconnect	
7	1001005904	2	Fitting, 45	
8	1001104477	1	Valve, Divertor (See Separate Breakdown in HYDRAULIC COMPONENTS Section)	
9	1001147416	1	Fitting, 45 ORFS	
10	1001260538	1	Fitting, Female Quick Disconnect	
11	1001264297	1	Plug	

FIGURE 8-8. AUXILIARY HYDRAULIC VALVE INSTALLATION

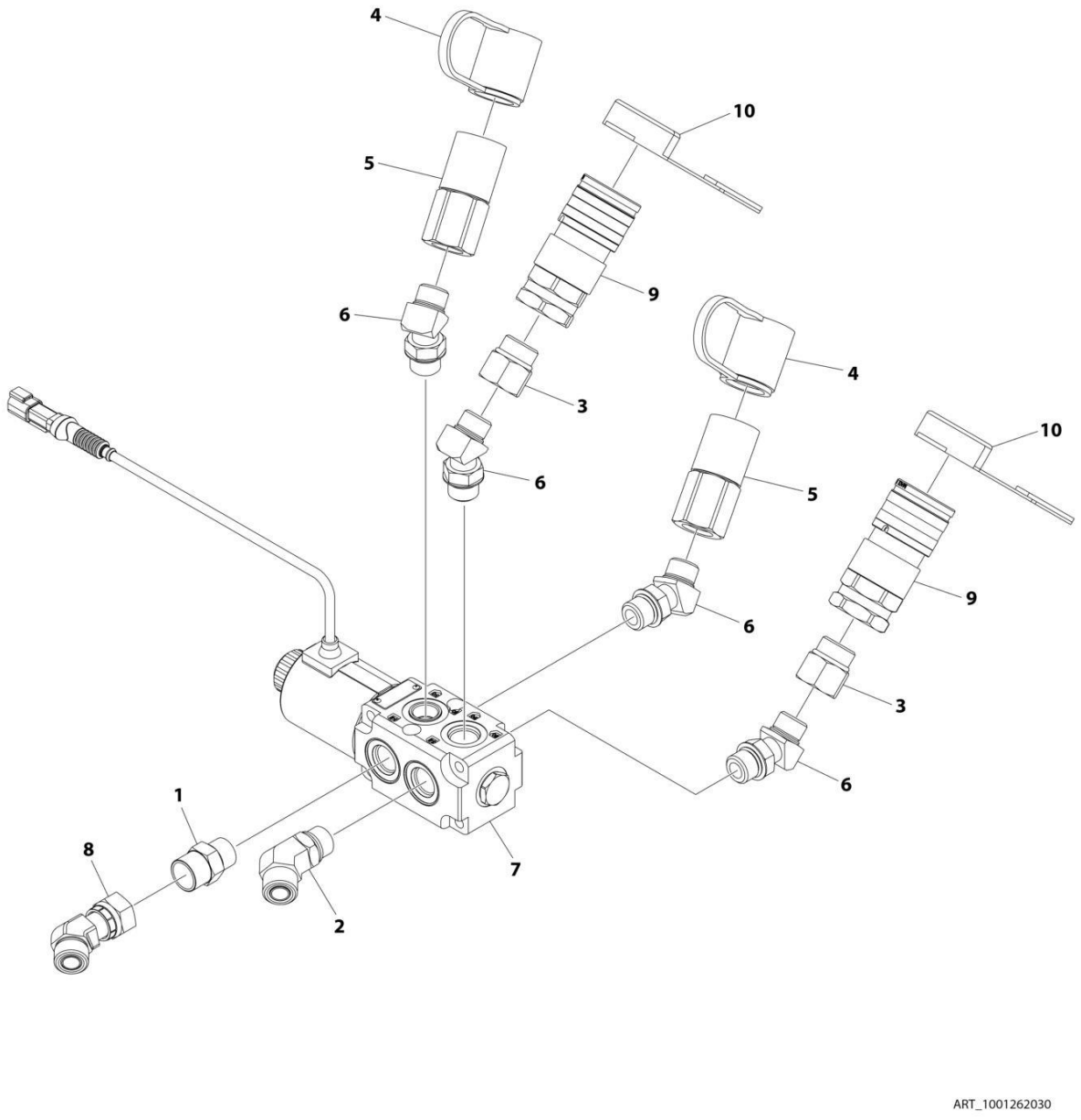

FIGURE 8-8. AUXILIARY HYDRAULIC VALVE INSTALLATION

ITEM	PART NUMBER	QTY	DESCRIPTION	REV
	1001262030	Ref	AUXILIARY HYDRAULIC VALVE INSTALLATION	B
1	2111010	1	Fitting, Straight ORFS	
2	2151010	1	Fitting, 45 ORFS	
3	8760550	2	Fitting, Tee	
4	1001003474	2	Cap	
5	1001003478	2	Fitting, Female Quick Disconnect	
6	1001005904	4	Fitting, 45	
7	1001110023	1	Valve, Divertor (See Separate Breakdown in HYDRAULIC COMPONENTS Section)	
7	70020764	1	COIL (not shown)	
7	70021531	1	RETAINER KIT (includes o-ring and nut) (not shown)	
7	70027596	1	SEAL KIT (not shown)	
8	1001147416	1	Fitting, 45 ORFS	
9	1001260538	2	Fitting, Female Quick Disconnect	
10	1001264297	2	Plug	

FIGURE 8-9. VALVE AUX HTDRAULIC INSTALLATION

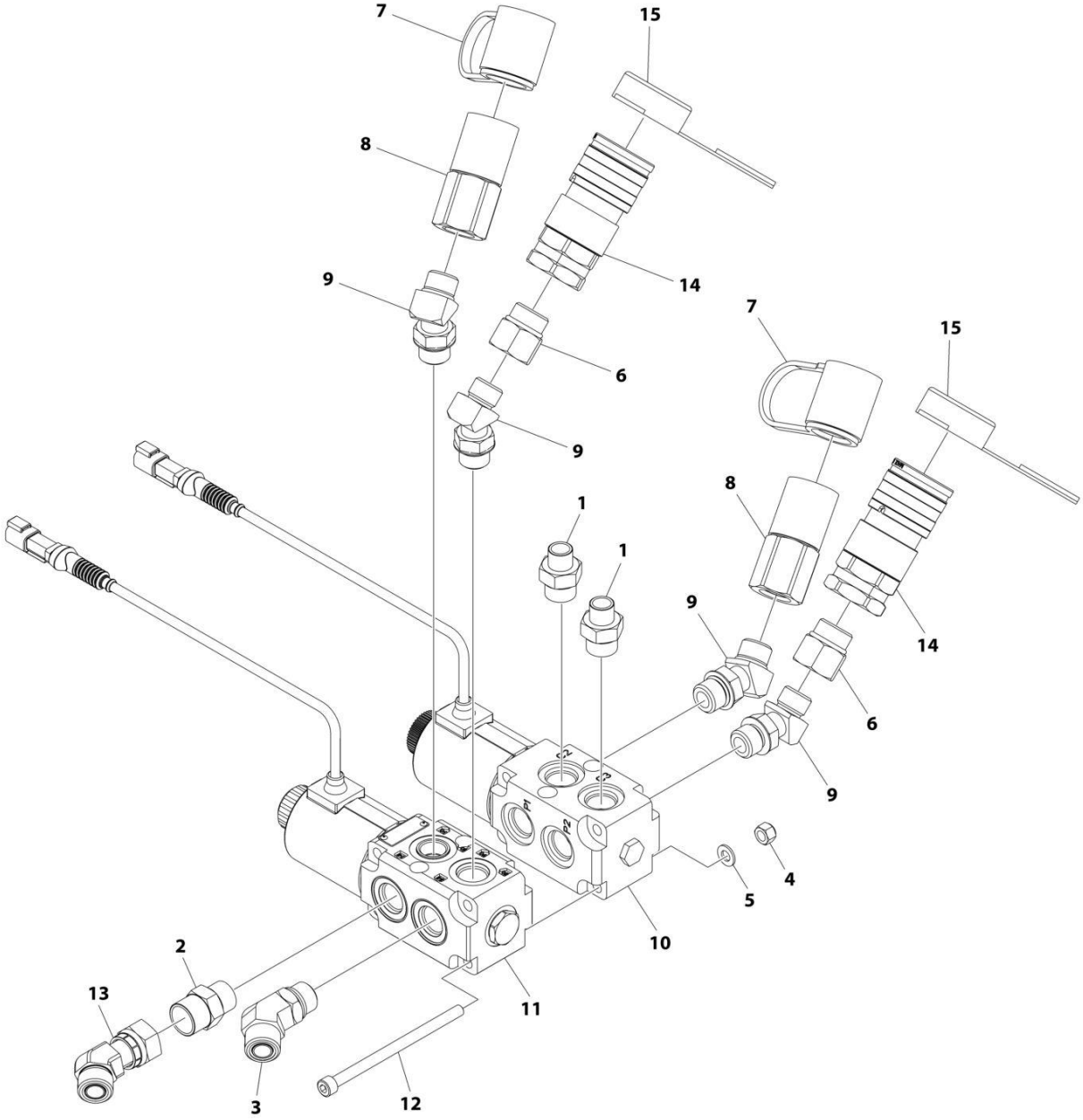

FIGURE 8-9. VALVE AUX HTDRAULIC INSTALLATION

ITEM	PART NUMBER	QTY	DESCRIPTION	REV
	1001262047	Ref	VALVE AUX HTDRAULIC INSTALLATION	B
1	2110610	2	Fitting, Straight ORFS	
2	2111010	1	Fitting, Straight ORFS	
3	2151010	1	Fitting, 45 ORFS	
4	3290805	4	Nut, M8 x 1.25	
5	4811900	4	Washer, M8	
6	8760550	2	Reducer	
7	1001003474	2	Cap	
8	1001003478	2	Fitting, Female Quick Disconnect	
9	1001005904	4	Fitting, 45	
10	1001104477	1	Valve, Divertor (See Separate Breakdown in HYDRAULIC COMPONENTS Section)	
11	1001110023	1	Valve, Divertor (See Separate Breakdown in HYDRAULIC COMPONENTS Section)	
12	1001110115	4	Bolt, M8 x 100	
13	1001147416	1	Fitting, 45 ORFS	
14	1001260538	2	Fitting, Female Faster	
15	1001264297	2	Plug	

FIGURE 8-10. BOOM RAISE HOSE INSTALLATION (WITHOUT RIDE CONTROL)

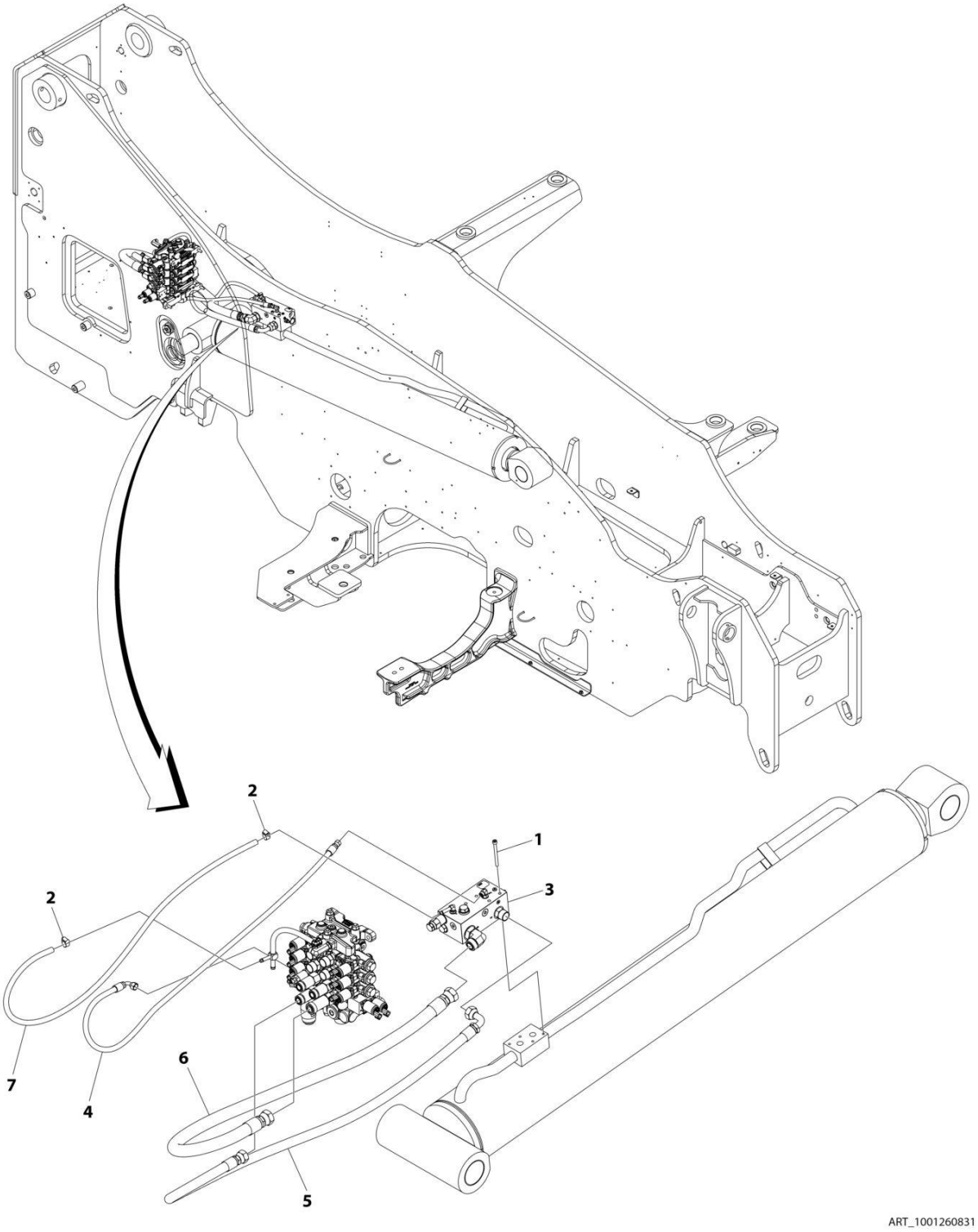

FIGURE 8-10. BOOM RAISE HOSE INSTALLATION (WITHOUT RIDE CONTROL)

ITEM	PART NUMBER	QTY	DESCRIPTION	REV
	1001260831	Ref	BOOM RAISE HOSE INSTALLATION (WITHOUT RIDE CONTROL)	A
1	4031922	4	Bolt M8 x 90	
2	8410013	2	Gear Clamp	
3	1001259216	1	Valve, Counter Balance Assembly (See Separate Breakdown in this Section)	
4	1001247372	1	Hose	
5	1001260915	1	Hose	
6	1001260916	1	Hose	
7	1001261844	1	Hose	

FIGURE 8-11. BOOM RAISE HOSE INSTALLATION (RIDE CONTROL)

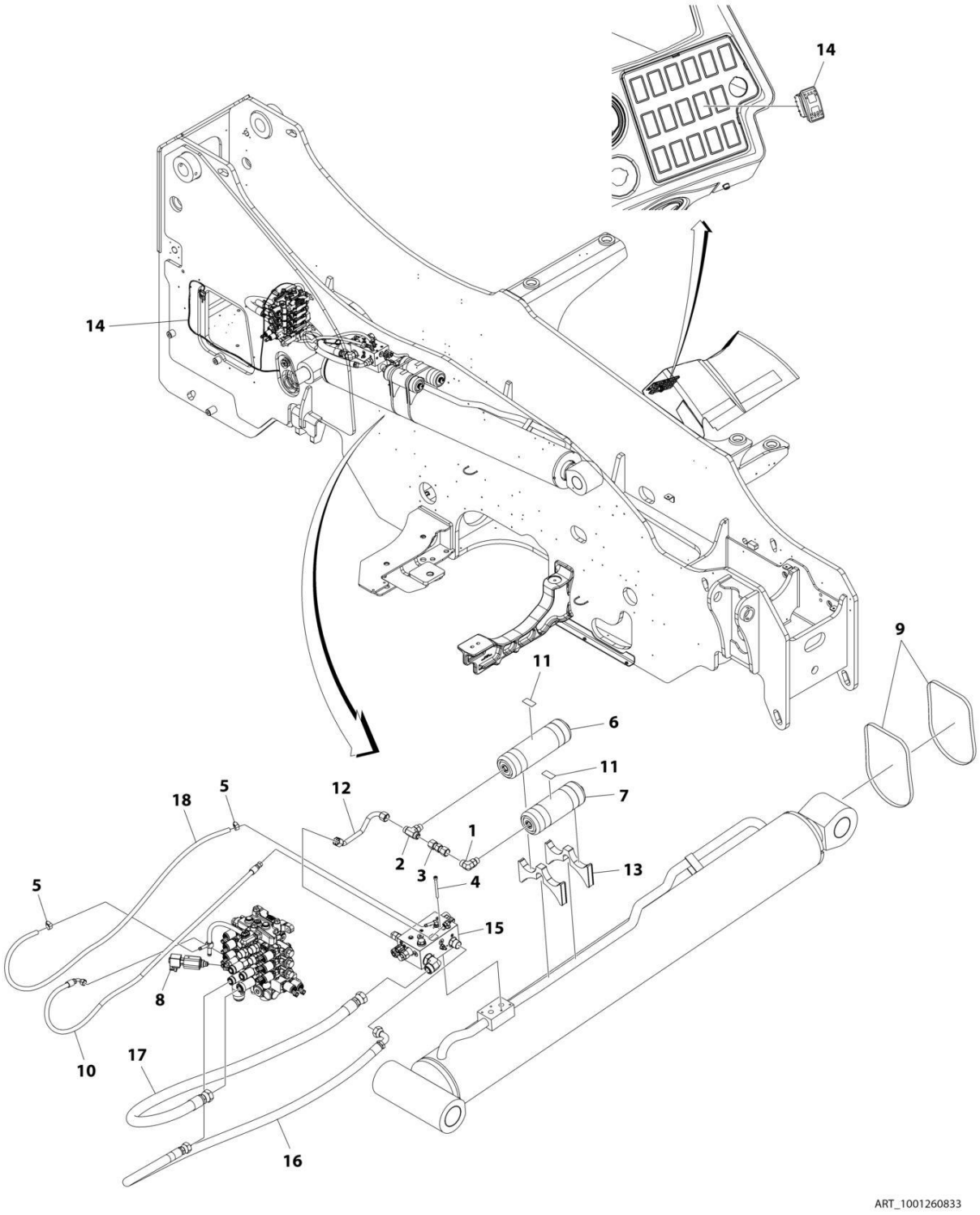

FIGURE 8-11. BOOM RAISE HOSE INSTALLATION (RIDE CONTROL)

ITEM	PART NUMBER	QTY	DESCRIPTION	REV
	1001260833	Ref	BOOM RAISE HOSE INSTALLATION (RIDE CONTROL)	A
1	2131010	1	Fitting, ORFS	
2	2170410	1	Fitting	
3	2172410	1	Adaptor	
4	4031922	4	Bolt M8 x 90	
5	8410013	2	Gear Clamp	
6	1001192771	1	Cylinder	
7	1001192772	1	Cylinder	
8	1001202020	1	Valve, MCV Tank Cartridge	
9	1001214829	2	Clamp	
10	1001247372	1	Hose	
11	1001247708	2	Decal, Stored Energy	
12	1001247979	1	Hose	
13	1001248677	2	Bumper, Cylinder Saddle	
14	1001248758	1	Installation, Ride Control Wiring (See Separate Breakdown in ELECTRICAL Section)	
15	1001260494	1	Valve, Ride & Float Assembly (See Separate Breakdown in this Section)	
16	1001260915	1	Hose	
17	1001260916	1	Hose	
18	1001261844	1	Hose	

FIGURE 8-12. CAB HYDRAULICS INSTALLATION

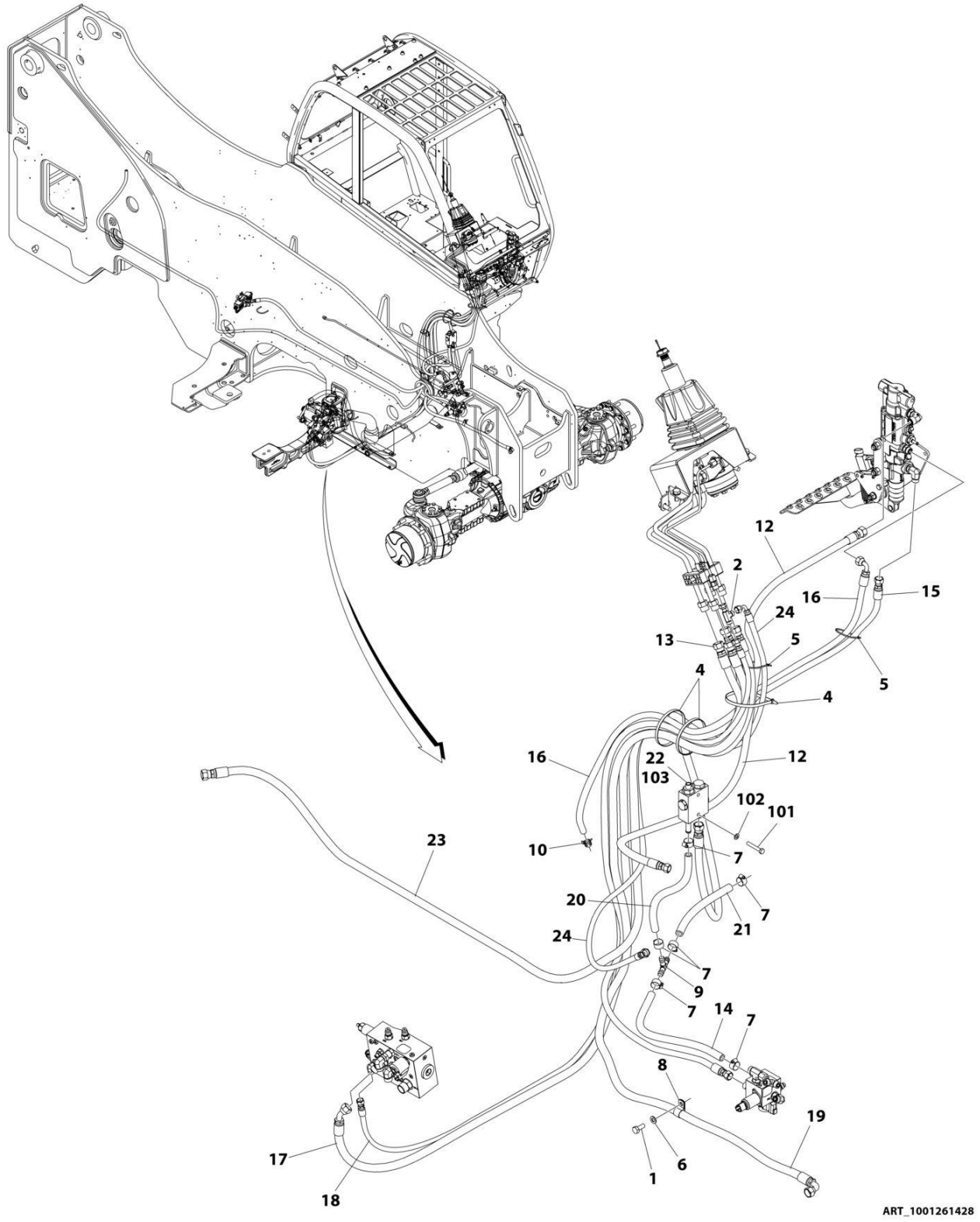

FIGURE 8-12. CAB HYDRAULICS INSTALLATION

ITEM	PART NUMBER	QTY	DESCRIPTION	REV
	1001261428	Ref	CAB HYDRAULICS INSTALLATION	C
1	0761012	1	Bolt M10 x 25	
2	2170704	1	Swivel Run Tee	
4	4240018	3	Tie Strap	
5	4240099	3	Tie, Wire	
6	4812000	1	Washer M10	
7	8405006	6	Clamp, Gear	
8	8406102	1	Clip	
9	8430099	1	Tee	
10	1001152729	1	Clamp	
12	1001210282	1	Hose	
13	1001204152	1	Hose	
14	1001246964	1	Hose	
15	1001246997	1	Hose	
16	1001246998	1	Hose	
17	1001247000	1	Hose	
18	1001247001	1	Hose	
19	1001247004	1	Hose	
20	1001247006	1	Hose	
21	1001247007	1	Hose	
22	1001248372	Ref	Check Valve Installation (includes items 101 thru 103)	C
23	1001253785	1	Hose	
24	1001284782	1	Hose	
101	0700818	2	Bolt M8 x 50	
102	4811900	2	Washer M8	
103	1001247054	1	Assembly, Check Valve & Fittings (See Separate Breakdown in HYDRAULIC CIRCUITS Section)	

FIGURE 8-13. CHECK VALVE INSTALLATION

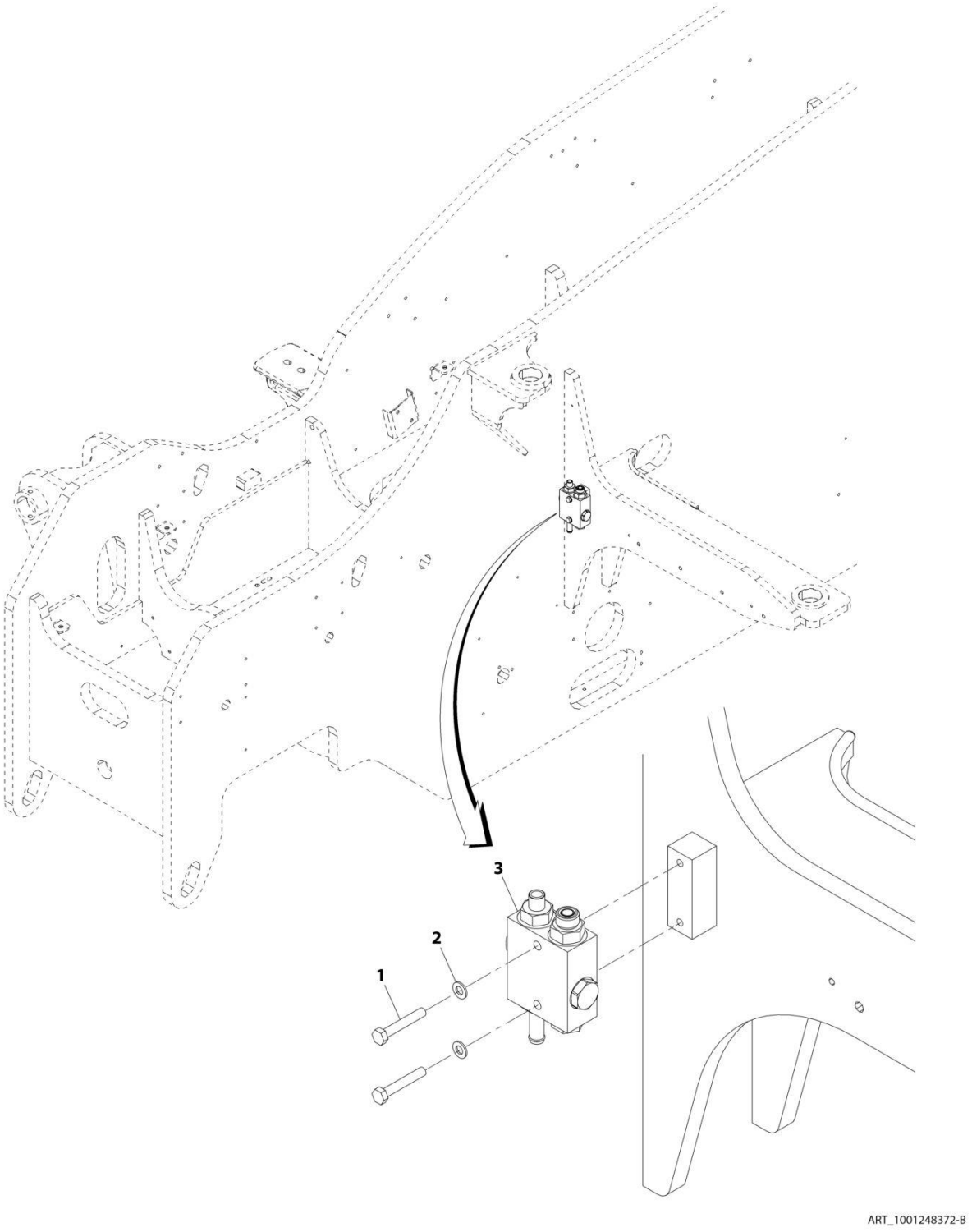

FIGURE 8-13. CHECK VALVE INSTALLATION

ITEM	PART NUMBER	QTY	DESCRIPTION	REV
	1001248372	Ref	Check Valve Installation	B
1	0700818	2	Bolt, M8X50	
2	4811900	2	Washer, M8	
3	1001247054	1	Assembly, Check Valve (See Separate Breakdown in this Section)	

FIGURE 8-14. CAB CHECK VALVE & FITTING ASSEMBLY

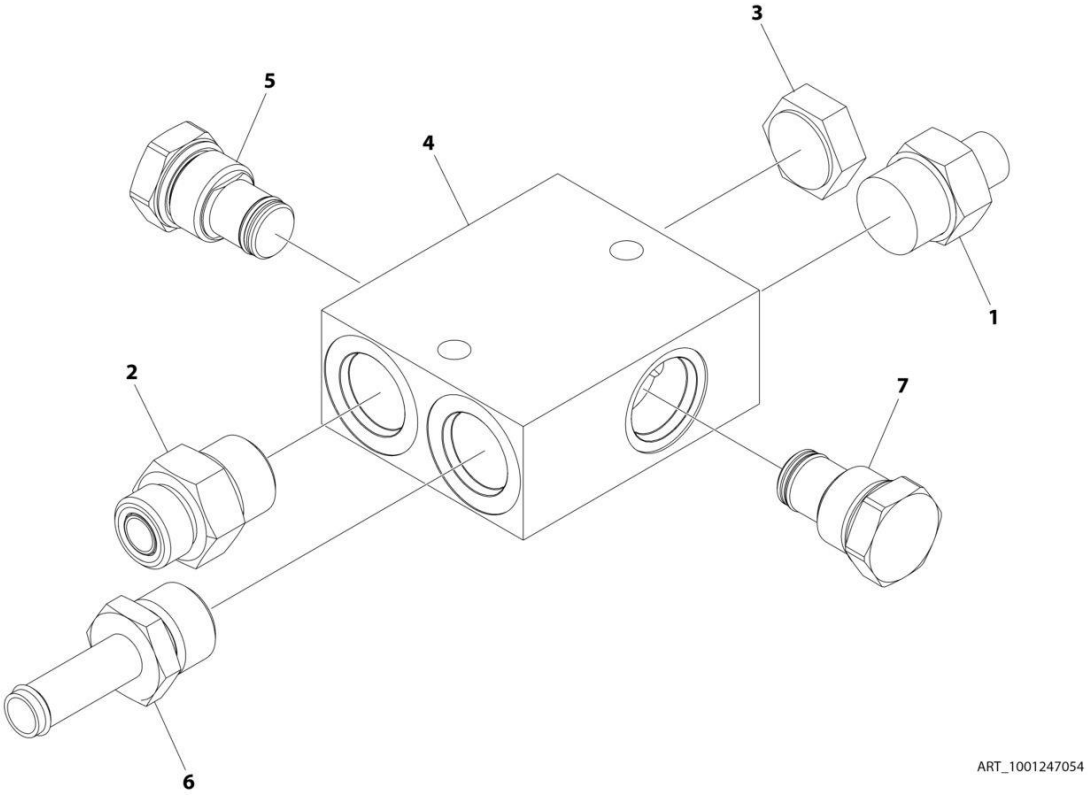

FIGURE 8-14. CAB CHECK VALVE & FITTING ASSEMBLY

ITEM	PART NUMBER	QTY	DESCRIPTION	REV
	1001247054	Ref	CHECK VALVE ASSEMBLY	C
1	2110410	1	Fitting, Straight ORFS	
2	2110810	1	Fitting, Straight ORFS	
3	2220239	1	Plug	
4	1001210780	1	Manifold, Dual Check	
5	1001210801	1	Valve, Check (2 PSI)	
6	1001225656	1	Fitting, Straight ORFS	
7	1001231393	1	Valve, Check (30 PSI)	

FIGURE 8-15. CHARGE FILTER HOSE INSTALLATION

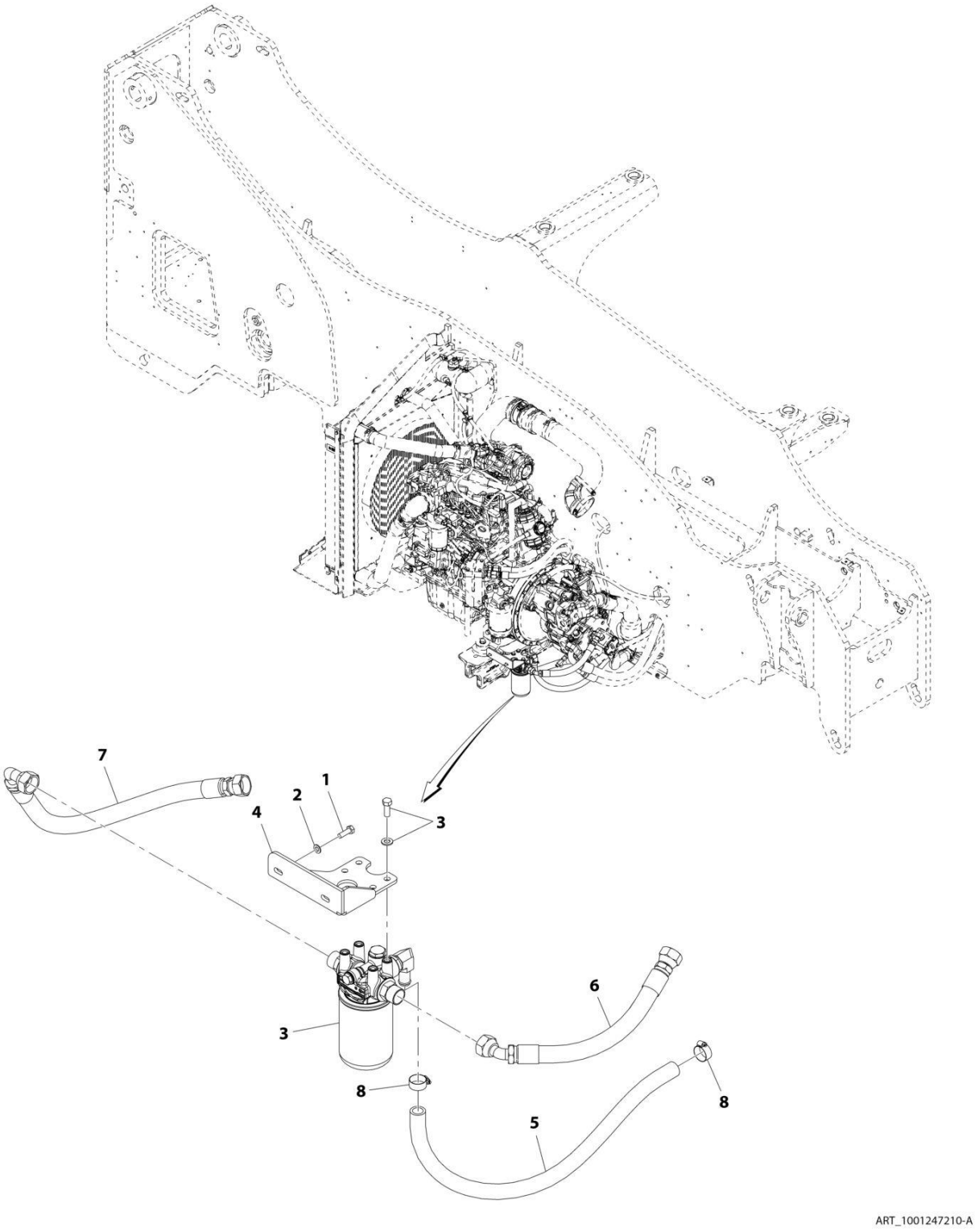

FIGURE 8-15. CHARGE FILTER HOSE INSTALLATION

ITEM	PART NUMBER	QTY	DESCRIPTION	REV
	1001247210	Ref	Charge Filter Hose Installation	A
1	0700812	2	Screw, M8X25 LG	
2	4811900	2	Washer, M8	
3	1001247206	1	Installation, Charge Filter (See Separate Breakdown in this Section)	
4	1001247208	1	Bracket, Filter Support	
5	1001247211	1	Hose	
6	1001247212	1	Hose	
7	1001247213	1	Hose	
8	8405007	2	Clamp	

FIGURE 8-16. CHARGE FILTER INSTALLATION

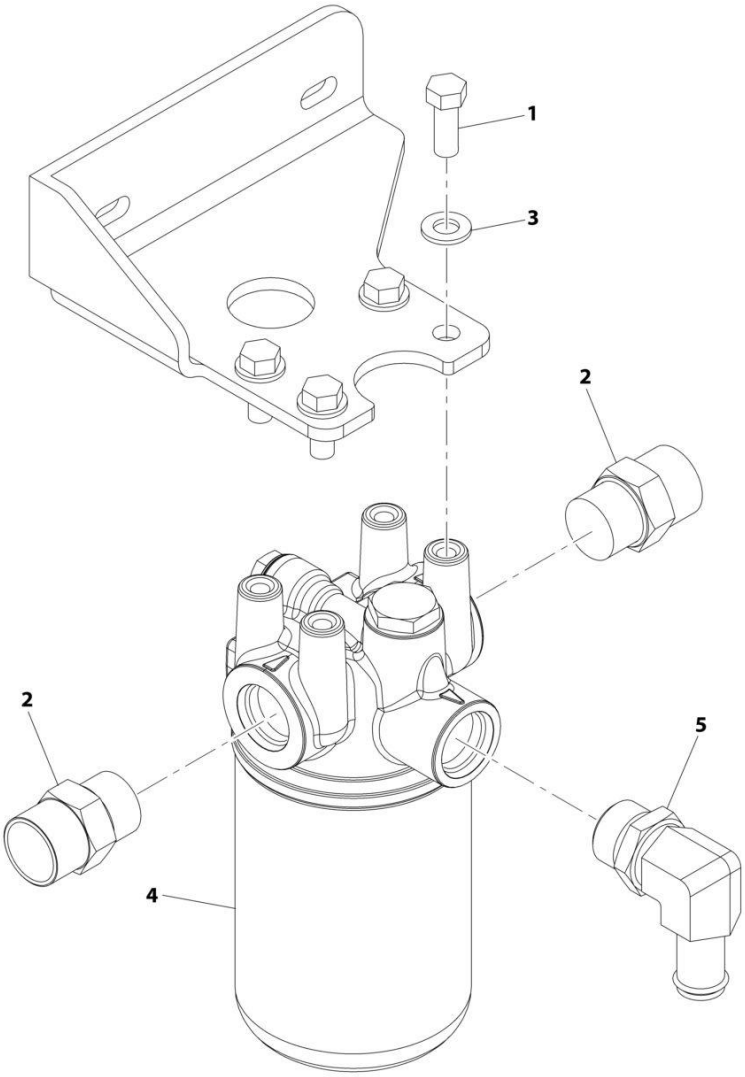

ART_1001247206-B

FIGURE 8-16. CHARGE FILTER INSTALLATION

ITEM	PART NUMBER	QTY	DESCRIPTION	REV
	1001247206	Ref	Charge Filter Installation	B
1	0641608	4	Bolt, 3/8-16 X 1	
2	2111212	2	Fitting, Straight ORFS	
3	4812000	4	Washer, M10	
4	1001141976	1	Assembly, Implement Pump Filter (See Separate Breakdown in this Section)	
5	1001188880	1	Fitting	

FIGURE 8-17. IMPLEMENT PUMP FILTER ASSEMBLY

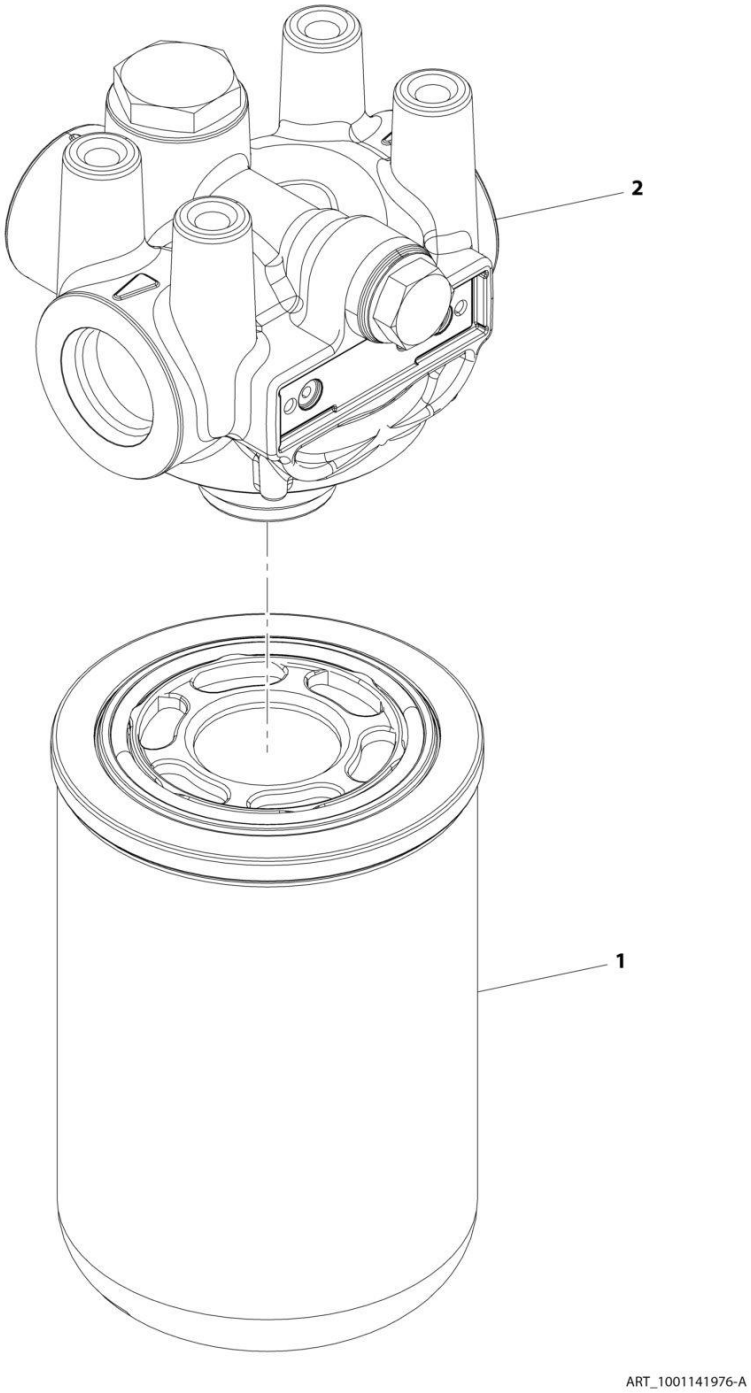

FIGURE 8-17. IMPLEMENT PUMP FILTER ASSEMBLY

ITEM	PART NUMBER	QTY	DESCRIPTION	REV
	1001141976	Ref	Implement Pump Filter Assembly	A
1	1001141461	1	Filter	
2	1001141462	1	Pump, Filter	

FIGURE 8-18. ENGINE BAY HYDRAULIC INSTALLATION

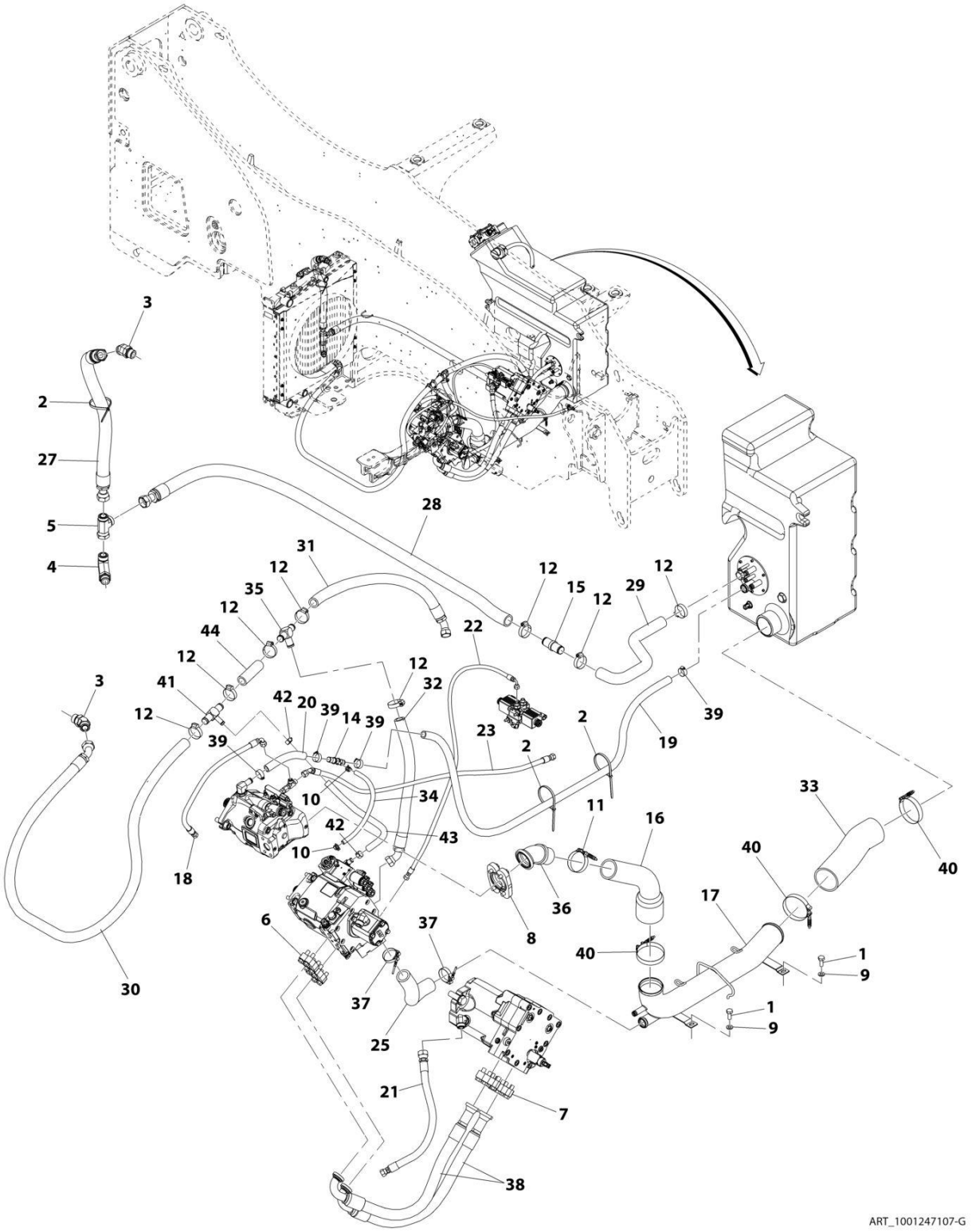

FIGURE 8-18. ENGINE BAY HYDRAULIC INSTALLATION

ITEM	PART NUMBER	QTY	DESCRIPTION	REV
	1001247107	Ref	Engine Bay Hydraulic Installation	G
1	0761012	4	Bolt, M10X25	
2	1062255	5	Strap, Tie	
3	2151616	2	Fitting, ORFS	
4	2170216	1	Fitting, ORFS	
5	2170716	1	Fitting, ORFS	
6	2171716	2	Flange Kit	
7	2171733	2	Flange Kit	
8	2171840	1	Flange Kit	
9	4812000	4	Washer, M10	
10	1001152729	2	Clamp	
11	1001253228	1	Clamp	
12	8405103	8	Gear Clamp	
14	1001137132	1	Fitting	
15	1001212921	1	Adapter	
16	1001247108	1	Hose	
17	1001247109	1	Hose	
18	1001263934	1	Hose	
19	1001247116	1	Hose	
20	1001247117	1	Hose	
21	1001247118	1	Hose	
22	1001247119	1	Hose	
23	1001247120	1	Hose	
25	1001247123	1	Hose	
27	1001247125	1	Hose	
28	1001247126	1	Hose	
29	1001247127	1	Hose	
30	1001247128	1	Hose	
31	1001247129	1	Hose	
32	1001247130	1	Hose	
33	1001247166	1	Hose	
34	1001247364	1	Hose	
35	1001247736	1	Fitting	
36	1001247739	1	Fitting	
37	1001014224	2	Clamp	
38	1001255538	2	Hose	
39	8405007	6	Clamp	
40	1001253072	3	Clamp	
41	1001258019	1	Fitting	
42	8410009	2	Clamp, Gear	
43	1001257346	1	Hose	
44	1001257347	1	Hose	

FIGURE 8-19. FRAME HYDRAULICS INSTALLATION

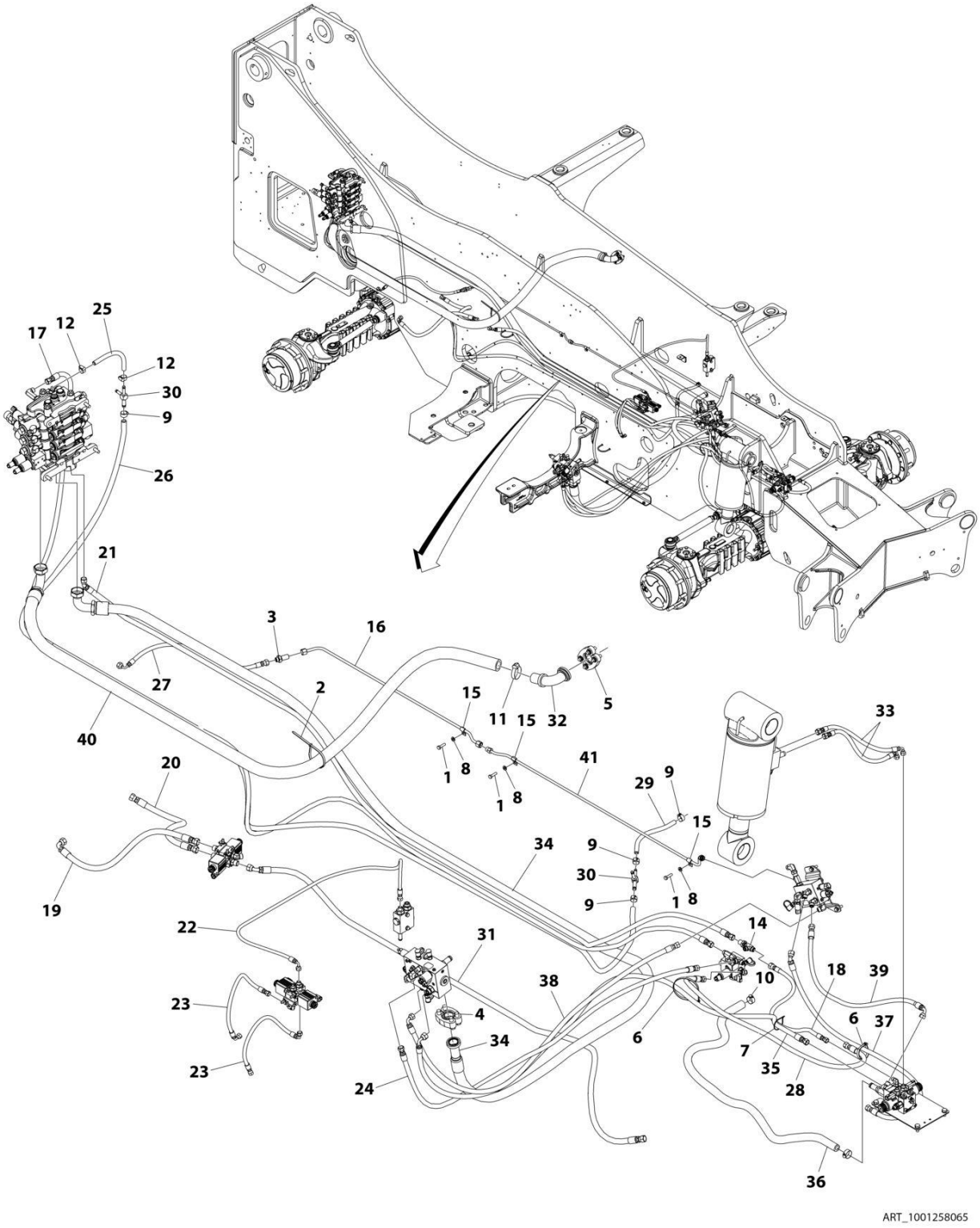

FIGURE 8-19. FRAME HYDRAULICS INSTALLATION

ITEM	PART NUMBER	QTY	DESCRIPTION	REV
	1001258065	Ref	FRAME HYDRAULICS INSTALLATION	D
1	0760814	3	Bolt M8 x 30	
2	1062255	1	Tie-Strap	
3	2171106	1	Fitting	
4	2171733	1	Fitting	
5	2171824	1	Fitting	
6	4240018	2	Strap, Cable Tie	
7	4240099	1	Tie-Strap	
8	5240800	3	Washer M8	
9	8405006	2	Clamp, Gear	
10	8405007	2	Clamp, Gear	
11	8405104	1	Clamp, Gear	
12	8410013	4	Clamp, Gear	
14	88662434	1	Fitting	
15	1001245862	3	Clip	
16	1001246470	1	Pipe, Rear Brake	
17	1001246603	1	Hose	
18	1001246607	1	Hose	
19	1001246609	1	Hose	
20	1001246642	1	Hose	
21	1001246643	1	Hose	
22	1001246645	1	Hose	
23	1001246646	2	Hose	
24	1001246648	1	Hose	
25	1001246960	1	Hose	
26	1001246961	1	Hose	
27	1001246965	1	Hose	
28	1001246968	1	Hose	
29	1001247005	1	Hose	
30	1001247713	2	Fitting	
31	1001253784	1	Hose	
32	1001258015	1	Fitting	
33	1001258066	2	Hose	
34	1001258067	1	Hose	
35	1001258068	1	Hose	
36	1001258069	1	Hose	
37	1001267835	1	Hose	
38	1001260434	1	Hose	
39	2717162	1	Hose	
40	1001261456	1	Hose	
41	1001266444	1	Pipe	

FIGURE 8-20. FRAME SWAY INSTALLATION

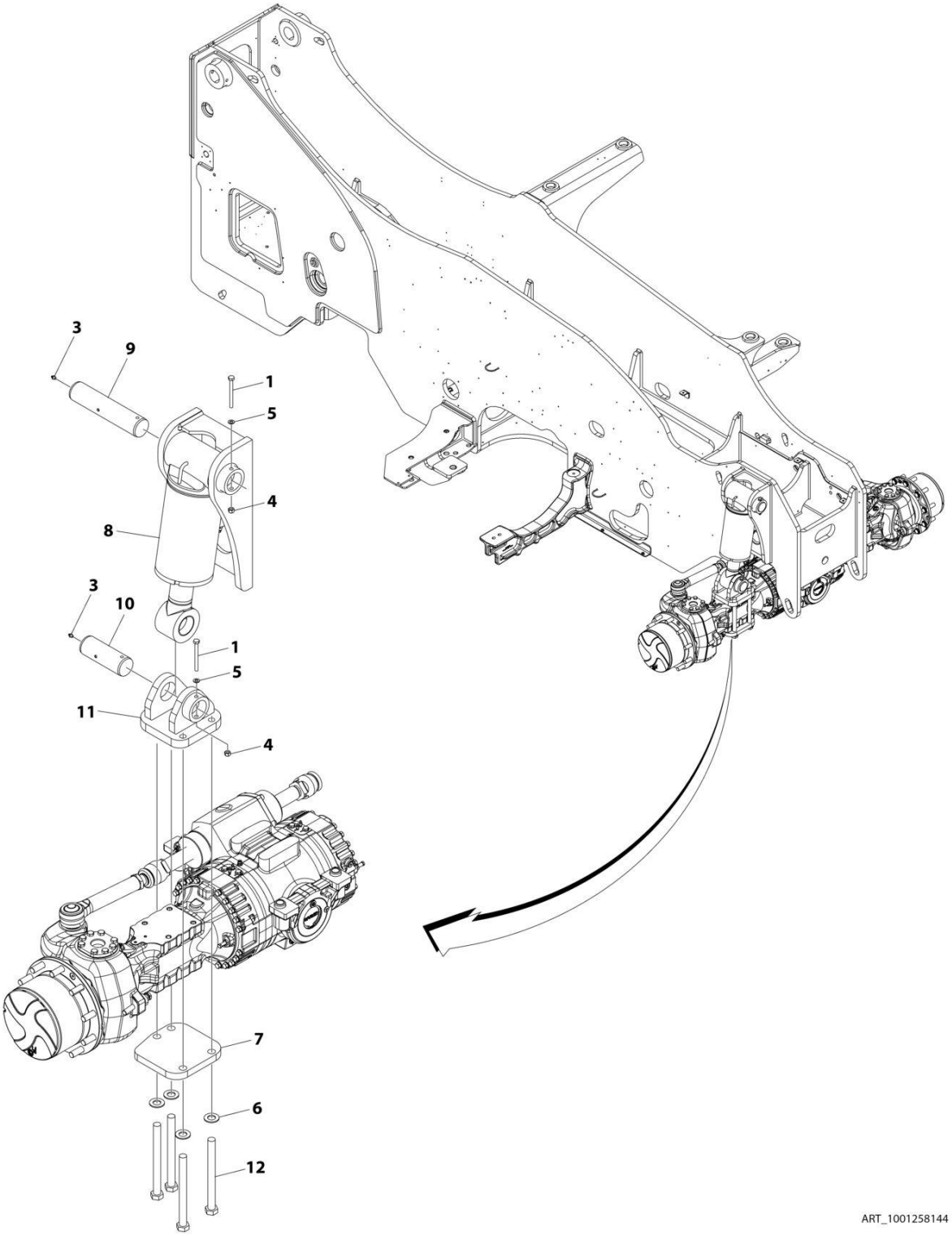

FIGURE 8-20. FRAME SWAY INSTALLATION

ITEM	PART NUMBER	QTY	DESCRIPTION	REV
	1001258144	Ref	FRAME SWAY INSTALLATION	B
1	0701028	2	Screw M10 x 110	
3	2160016	2	Fitting, Grease	
4	3291005	2	Locknut M10 x 1.5 Grd8	
5	4812000	2	Washer M10	
6	5242400	4	Washer M24	
7	1001177047	1	Plate	
8	1001205727	1	Installation, Sway Cylinder (See Separate Breakdown in this Section)	
9	1001246560	1	Pin	
10	1001246561	1	Pin	
11	1001258145	1	Bracket, Axle Sway/RAS	
12	0712444	4	Screw M24 x 270	

FIGURE 8-21. FRAME SWAY CYLINDER INSTALLATION

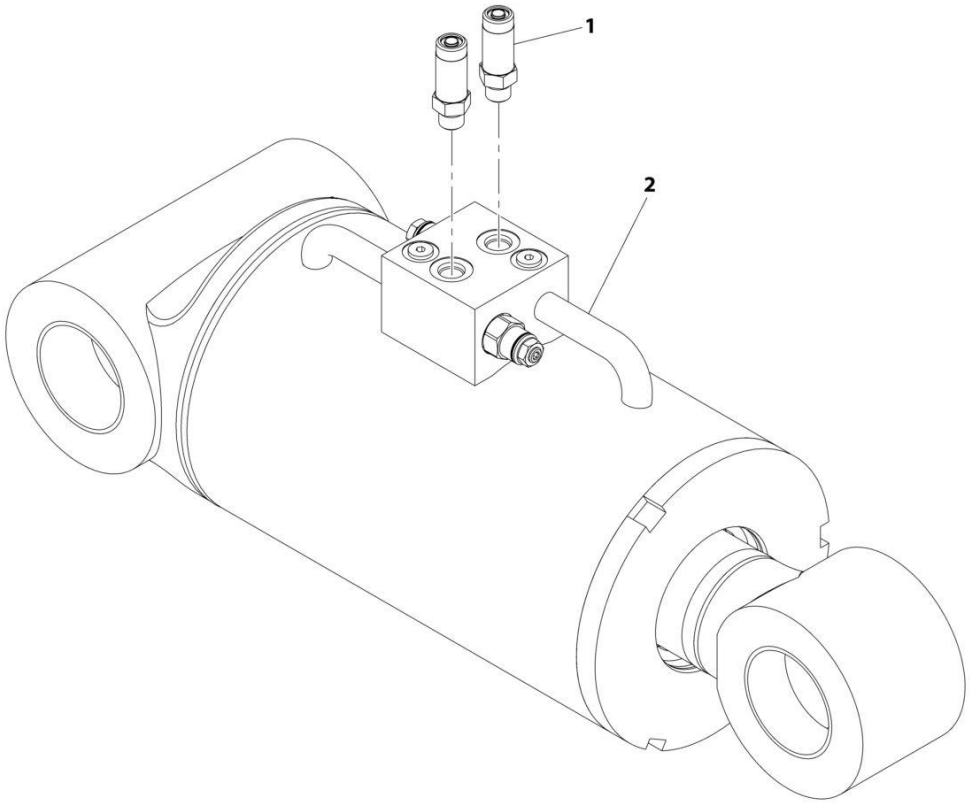

ART_1001205727-A

FIGURE 8-21. FRAME SWAY CYLINDER INSTALLATION

ITEM	PART NUMBER	QTY	DESCRIPTION	REV
	1001205727	Ref	Sway Cylinder Installation	A
1	2170106	2	Fitting	
2	1001174987	1	Assembly, Frame Level Cylinder (See Separate Breakdown in this Section)	

FIGURE 8-22. FRAME SWAY CONTROL VALVE INSTALLATION

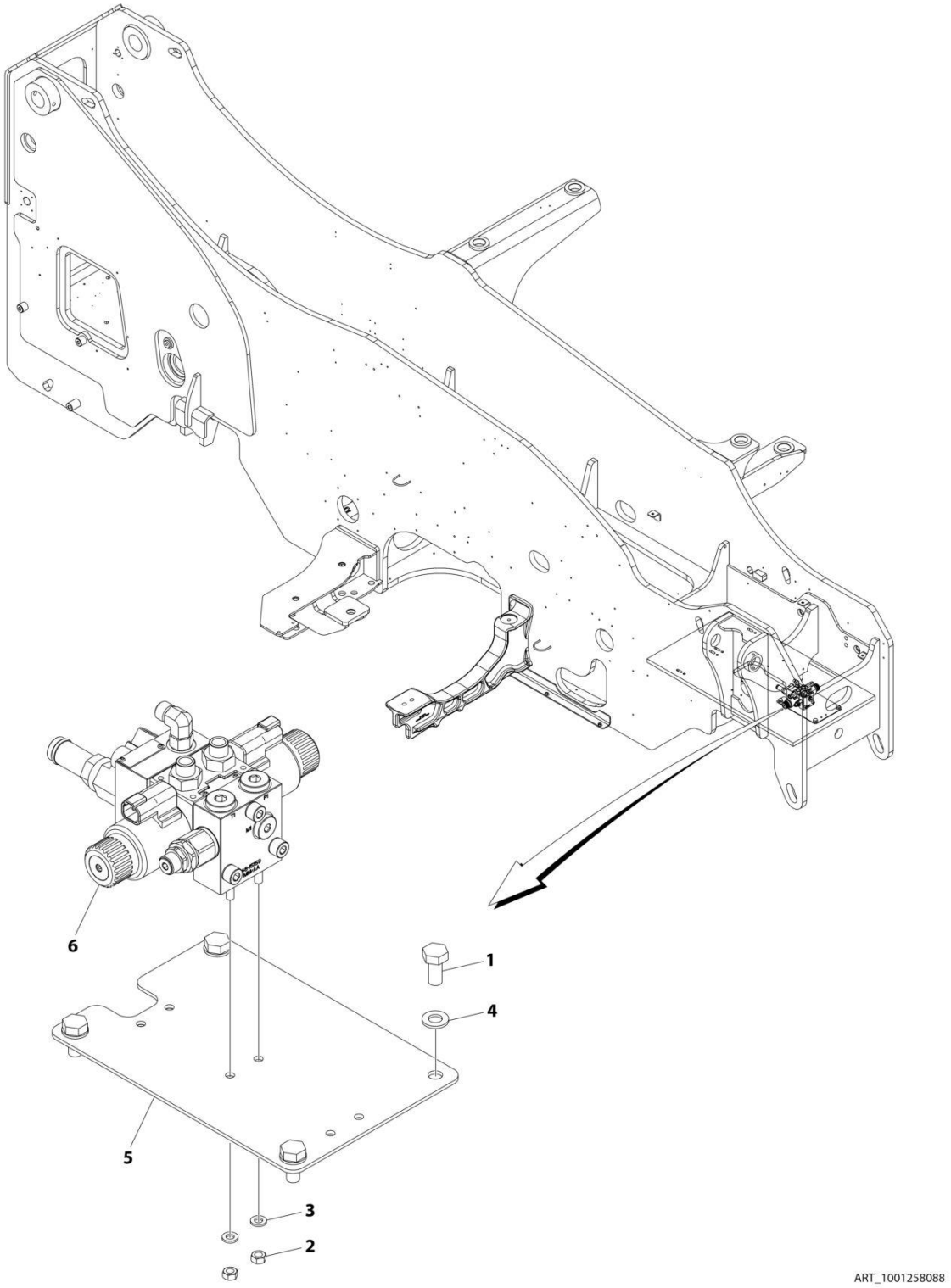

FIGURE 8-22. FRAME SWAY CONTROL VALVE INSTALLATION

ITEM	PART NUMBER	QTY	DESCRIPTION	REV
	1001258088	Ref	FRAME SWAY CONTROL VALVE INSTALLATION	A
1	0761011	4	Bolt M10 x 22	
2	3290601	4	Nut M6 x 1	
3	4811700	4	Washer M6	
4	4812000	4	Washer M10	
5	1001245234	1	Plate, Valve Mount	
6	1001258089	1	Assembly, Sway Control Valve (See Separate Breakdown in this Section)	

FIGURE 8-23. FRAME SWAY CONTROL VALVE & FITTING ASEMBLY

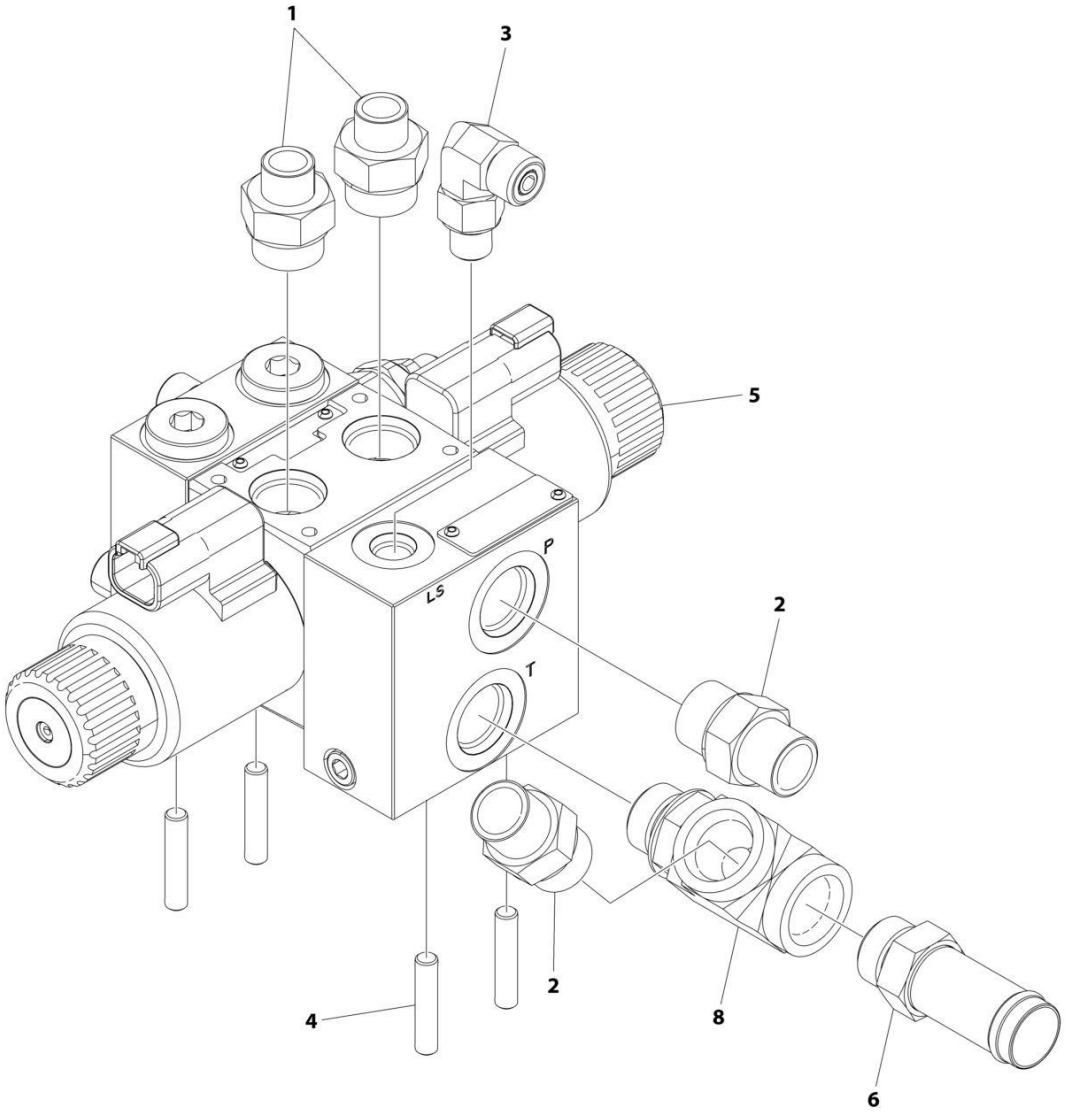

FIGURE 8-23. FRAME SWAY CONTROL VALVE & FITTING ASEMBLY

ITEM	PART NUMBER	QTY	DESCRIPTION	REV
	1001258089	Ref	SWAY VALVE ASSEMBLY	C
1	2110408	2	Fitting, Straight ORFS	
2	2110808	2	Fitting, Straight ORFS	
3	2130404	1	Fitting, 90 ORFS	
4	1001100379	4	Stud M6 x 30	
5	1001270176	1	Proportional Sway valve (See Separate Breakdown in HYDRAULIC COMPONENTS Section)	
6	1001258014	1	Fitting, Straight	
8	1001270174	1	Fitting	

FIGURE 8-24. MAIN CONTROL VALVE INSTALLATION

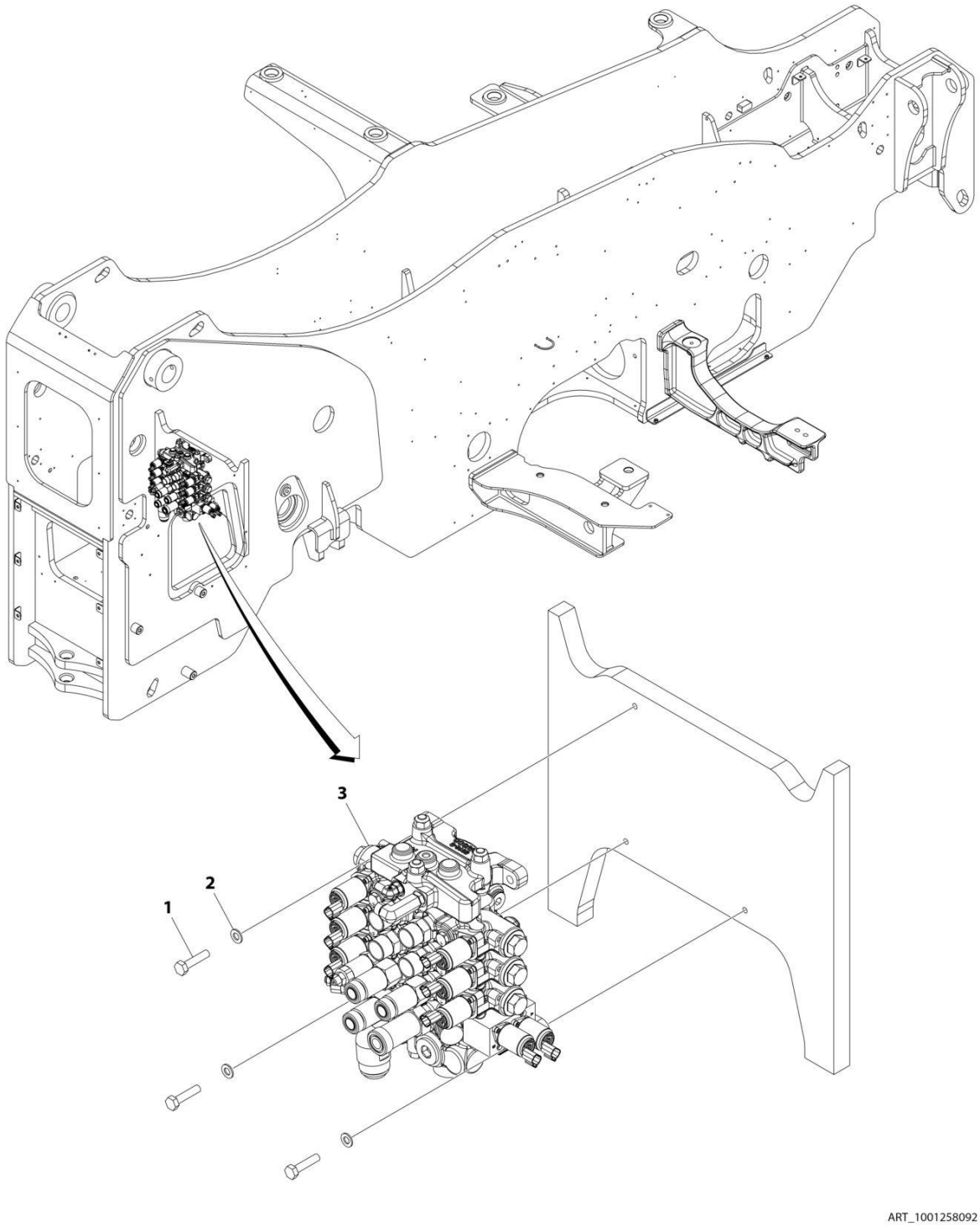

FIGURE 8-24. MAIN CONTROL VALVE INSTALLATION

ITEM	PART NUMBER	QTY	DESCRIPTION	REV
	1001258092	Ref	MAIN CONTROL VALVE INSTALLATION	A
1	0701017	3	Bolt M10 x 45	
2	4812000	3	Washer M10	
3	1001258093	1	Assembly, Main Control Valve (See Separate Breakdown in this Section)	

FIGURE 8-25. MAIN CONTROL VALVE & FITTINGS ASSEMBLY

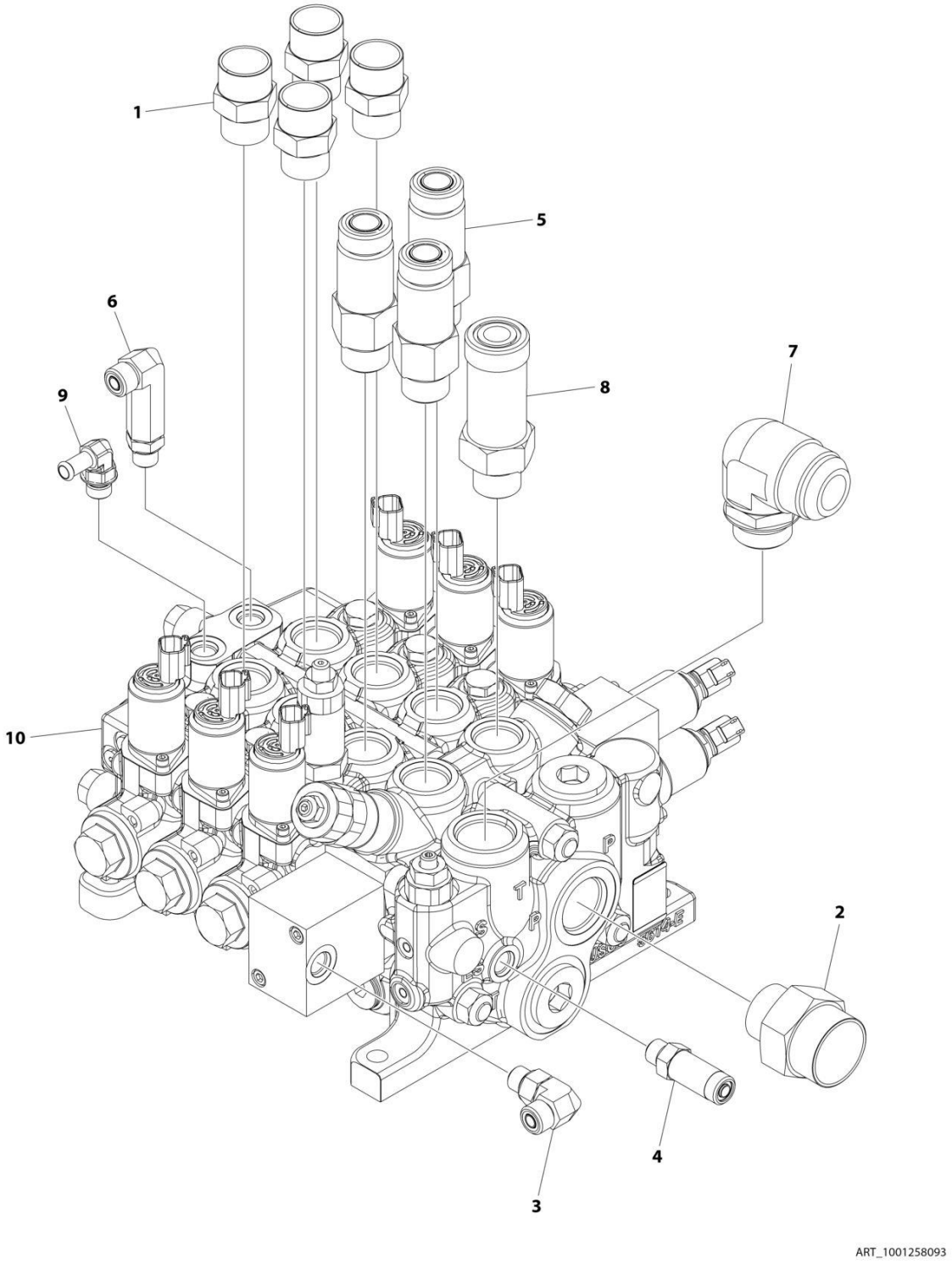

FIGURE 8-25. MAIN CONTROL VALVE & FITTINGS ASSEMBLY

ITEM	PART NUMBER	QTY	DESCRIPTION	REV
	1001258093	Ref	MAIN CONTROL VALVE ASSEMBLY	B
1	2111212	4	Fitting, Straight ORFS	
2	2112016	1	Fitting, Straight ORFS	
3	2130606	1	Fitting, 90	
4	2170106	1	Fitting	
5	2170112	3	Fitting	
6	2170206	1	Fitting	
7	8770050	1	Elbow, 90	
8	88662327	1	Fitting, Straight ORFS	
9	1001178776	1	Fitting	
10	1001258094	1	Main Control Valve (See Separate Breakdown in HYDRAULIC COMPONENTS Section)	

FIGURE 8-26. PRIORITY VALVE INSTALLATION

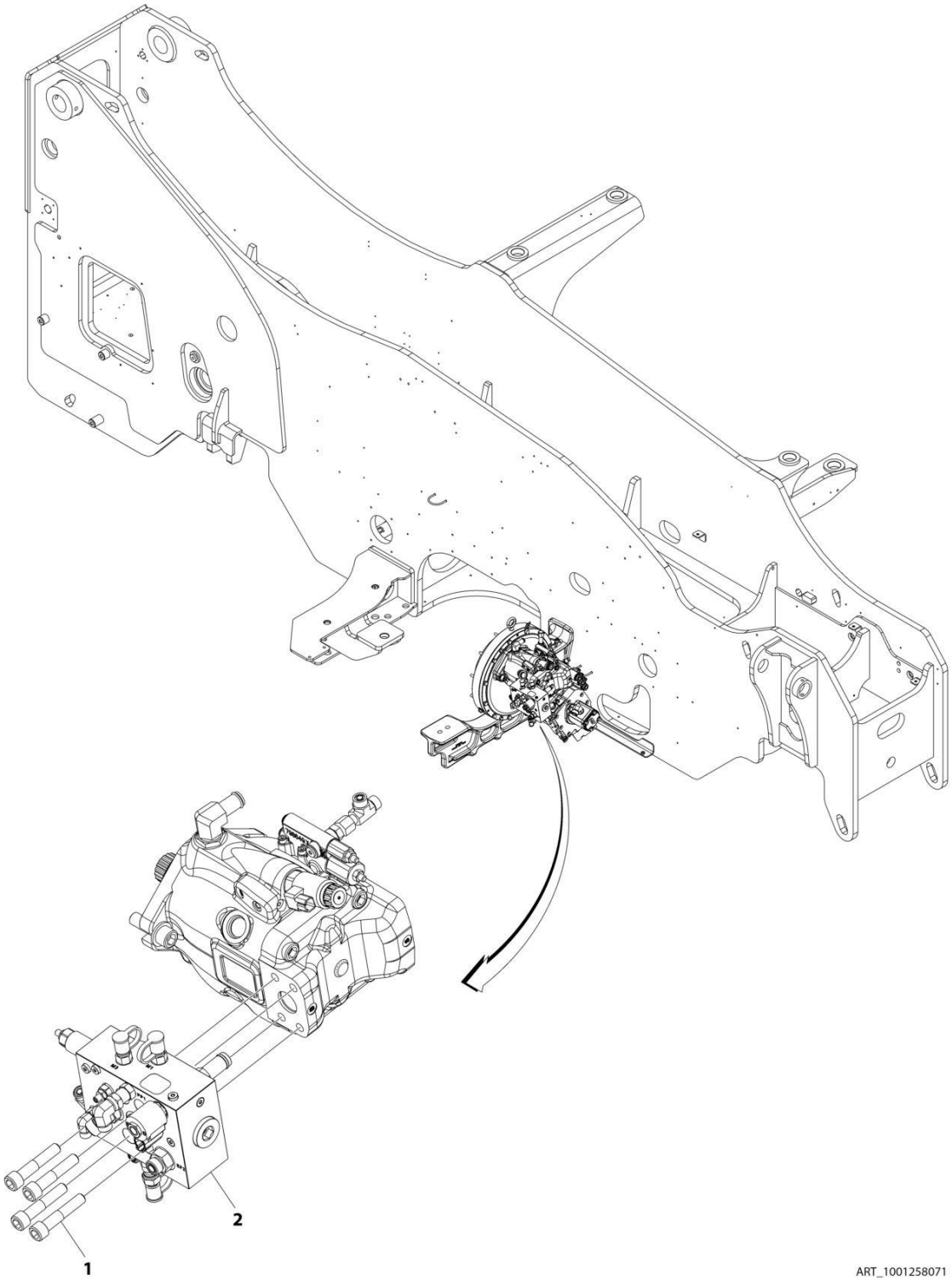

FIGURE 8-26. PRIORITY VALVE INSTALLATION

ITEM	PART NUMBER	QTY	DESCRIPTION	REV
	1001258071	Ref	PRIORITY VALVE INSTALLATION	A
1	3900368	4	Bolt M14 x 70	
2	1001258070	1	Assembly, Priority Valve (See Separate Breakdown in this Section)	

FIGURE 8-27. PRIORITY VALVE & FITTING ASSEMBLY

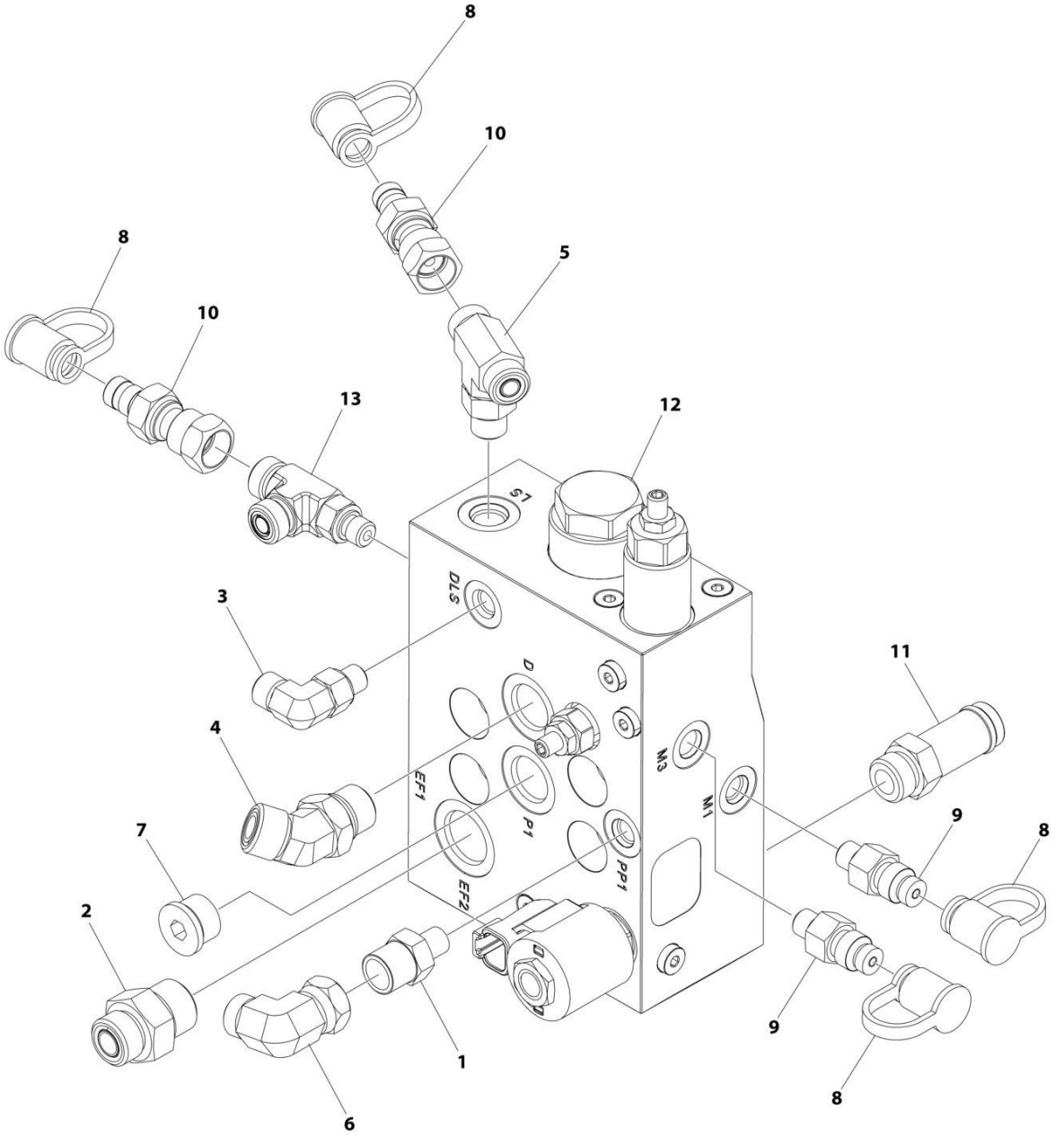

ART_1001258070

FIGURE 8-27. PRIORITY VALVE & FITTING ASSEMBLY

ITEM	PART NUMBER	QTY	DESCRIPTION	REV
	1001258070	Ref	PRIORITY VALVE ASSEMBLY	B
1	2110604	1	Fitting, Straight ORFS	
2	2110810	1	Fitting, Straight ORFS	
3	2130404	1	Fitting, 90 ORFS	
4	2150808	1	Fitting, 45 ORFS	
5	2170406	1	Fitting	
6	2172106	1	Adapter, 90	
7	2220886	1	Plug	
8	8430032	4	Plug	
9	8430033	2	Fitting, Straight	
10	8430081	2	Fitting	
11	1001258014	1	Fitting, Straight ORFS	
12	1001266710	1	Priority Valve (See Separate Breakdown in HYDRAULIC COMPONENTS Section)	
13	1001262296	1	Fitting, Tee	

FIGURE 8-28. COUNTERBALANCE VALVE ASSEMBLY

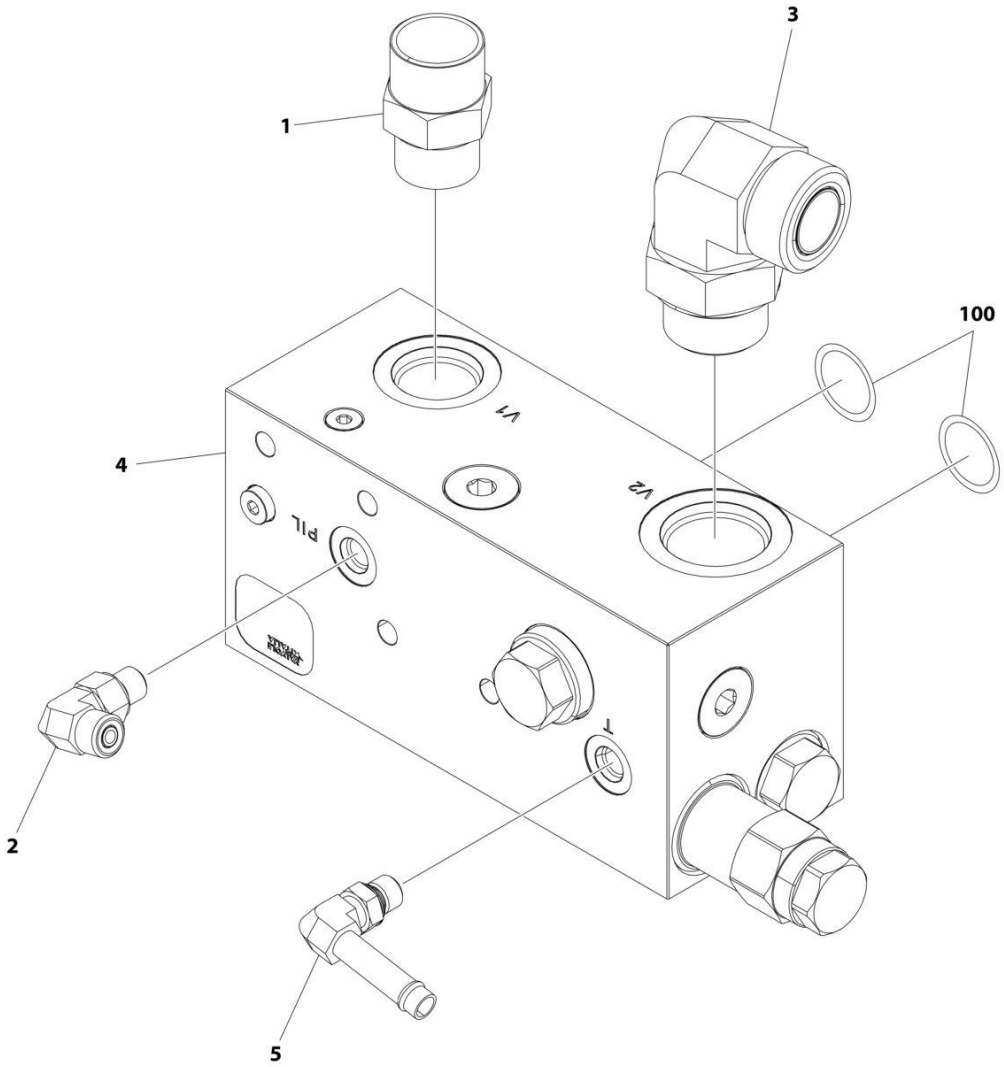

ART_1001259216

FIGURE 8-28. COUNTERBALANCE VALVE ASSEMBLY

ITEM	PART NUMBER	QTY	DESCRIPTION	REV
	1001259216	Ref	COUNTERBALANCE VALVE ASSEMBLY	A
1	2131212	1	Fitting, Straight	
2	2130404	1	Fitting, 90 ORFS	
3	2131616	1	Fitting, 90 ORFS	
4	1001258973	1	Valve, GLS (includes item 100)	
5	1001263034	1	Fitting, Pipe	
100	70028282	2	O-Ring	

FIGURE 8-29. RIDE AND FLOAT VALVE ASSEMBLY

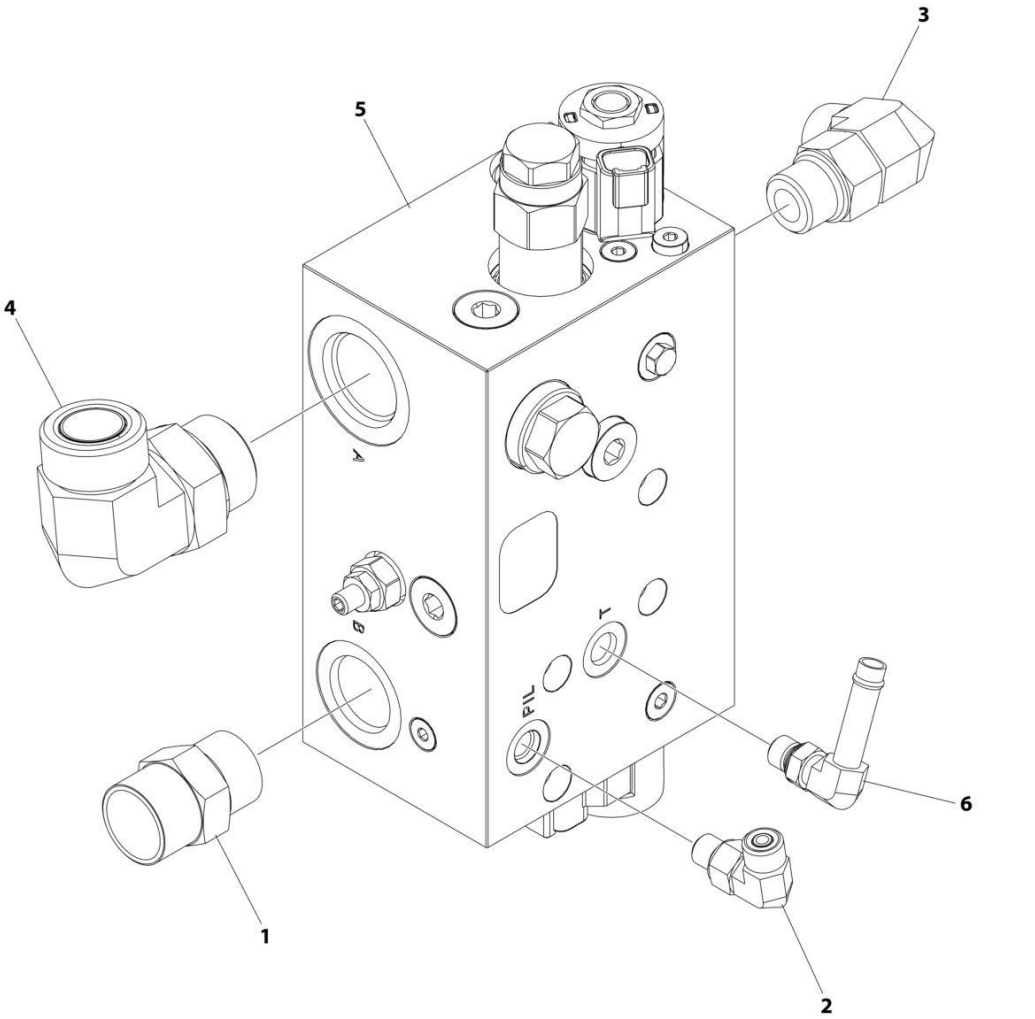

FIGURE 8-29. RIDE AND FLOAT VALVE ASSEMBLY

ITEM	PART NUMBER	QTY	DESCRIPTION	REV
	1001260494	Ref	RIDE AND FLOAT VALVE ASSEMBLY	A
1	2111212	1	Fitting, Straight	
2	2130404	1	Fitting, 90 ORFS	
3	2131010	1	Fitting, 90 ORFS	
4	2131616	1	Fitting, 90 ORFS	
5	1001260493	1	Valve, GLS with Ride/Float	
5	70028281	2	Coil, 10V	
5	70028282	2	O-Ring	
5	7022390	2	Nut	
6	1001263034	1	Fitting, Pipe	

FIGURE 8-30. SAHR VALVE INSTALLATION

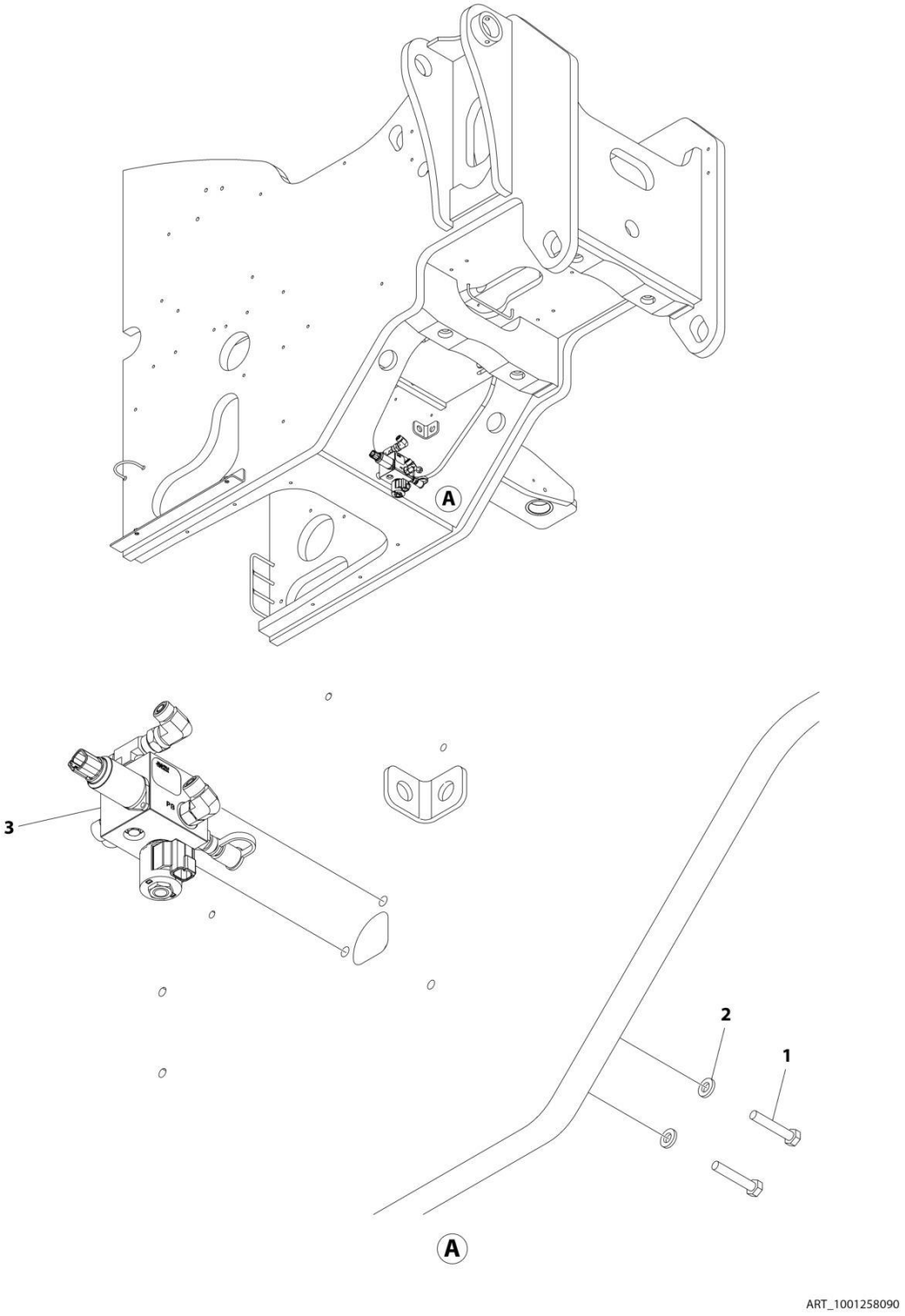

FIGURE 8-30. SAHR VALVE INSTALLATION

ITEM	PART NUMBER	QTY	DESCRIPTION	REV
	1001258090	Ref	SAHR VALVE INSTALLATION	A
1	0700817	2	Bolt M8 x 45	
2	5240800	2	Washer M8	
3	1001258095	1	Assembly, SAHR Brake Valve (See Separate Breakdown in this Section)	

FIGURE 8-31. SAHR BRAKE VALVE & FITTING ASSEMBLY

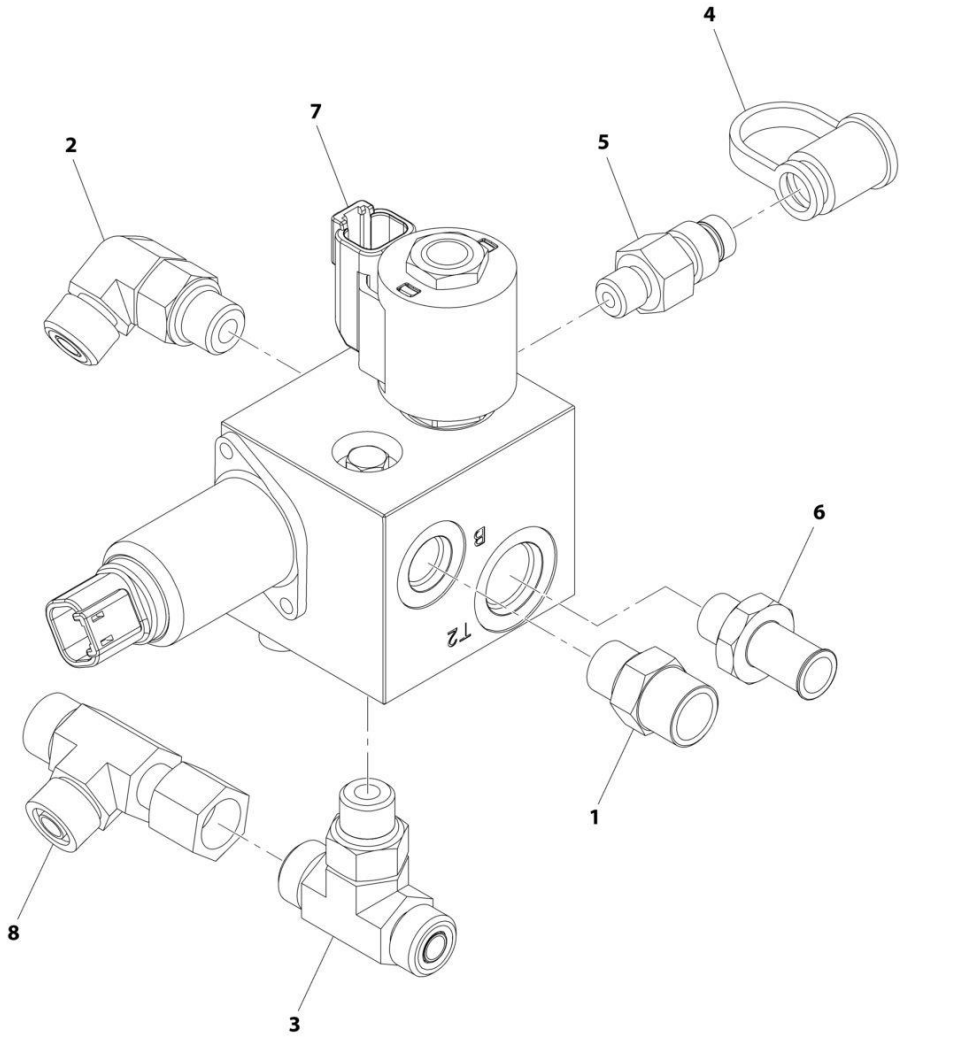

ART_1001242686-B

FIGURE 8-31. SAHR BRAKE VALVE & FITTING ASSEMBLY

ITEM	PART NUMBER	QTY	DESCRIPTION	REV
	1001242686	Ref	SAHR Brake Valve Assembly	B
1	2110606	1	Fitting, Straight ORFS	
2	2130606	1	Fitting, 90	
3	2170406	1	Fitting	
4	8430032	1	Plug	
5	8430033	1	Fitting, Straight	
6	1001190631	1	Fitting	
7	1001234127	1	Valve, SAHR Brake (See Separate Breakdown in Hydraulic Components Section)	
8	2170706	1	Fitting	

FIGURE 8-32. SAHR BRAKE VALVE ASSEMBLY

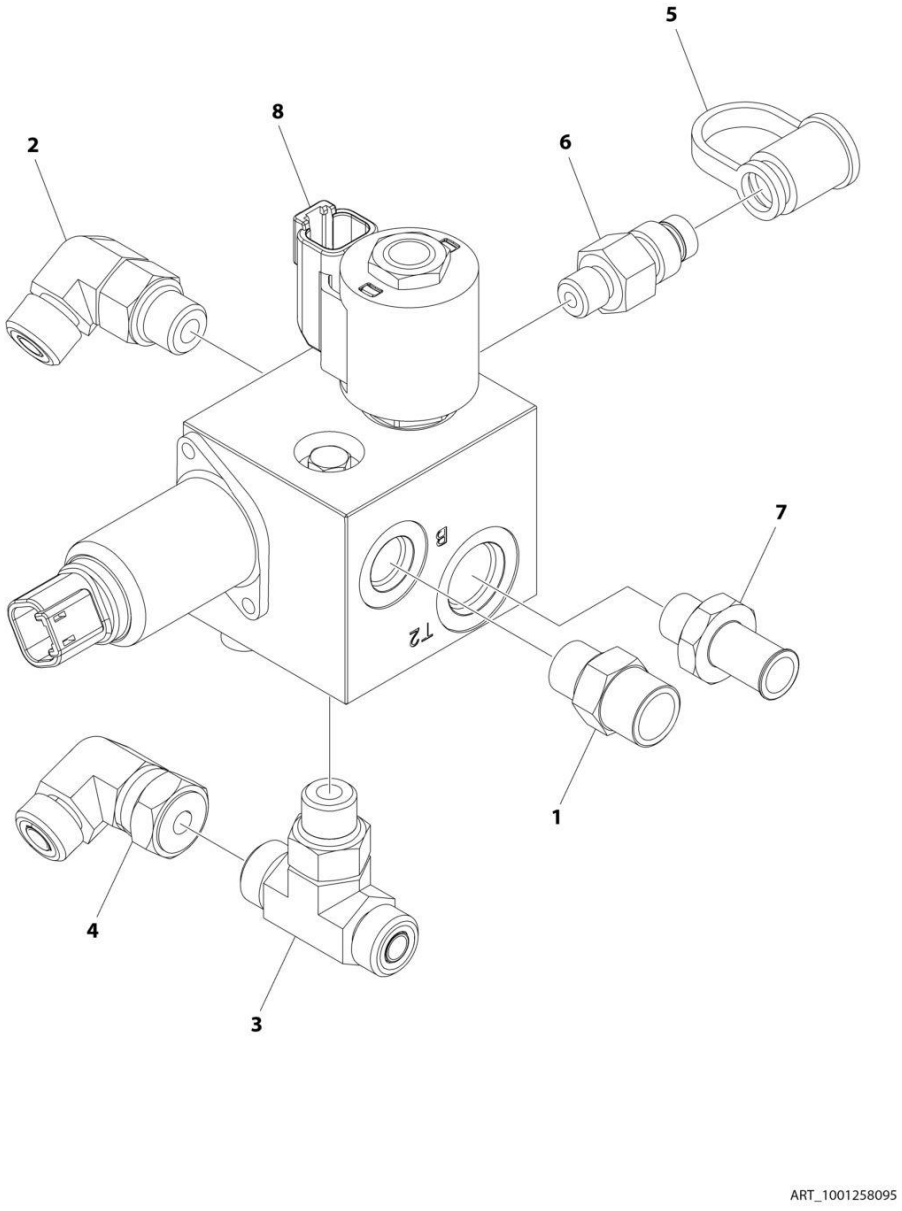

FIGURE 8-32. SAHR BRAKE VALVE ASSEMBLY

ITEM	PART NUMBER	QTY	DESCRIPTION	REV
	1001258095	Ref	SAHR BRAKE VALVE ASSEMBLY	A
1	2110606	1	Fitting, Straight ORFS	
2	2130606	1	Fitting, 90	
3	2170406	1	Fitting	
4	2172106	1	Fitting, 90	
5	8430032	1	Plug	
6	8430033	1	Fitting, Straight	
7	1001190631	1	Fitting	
8	1001234127	1	SAHR Brake Valve (See Separate Breakdown in HUDRAULIC COMPONENTS Section)	

FIGURE 8-33. BRAKE VALVE RELAY INSTALLATION

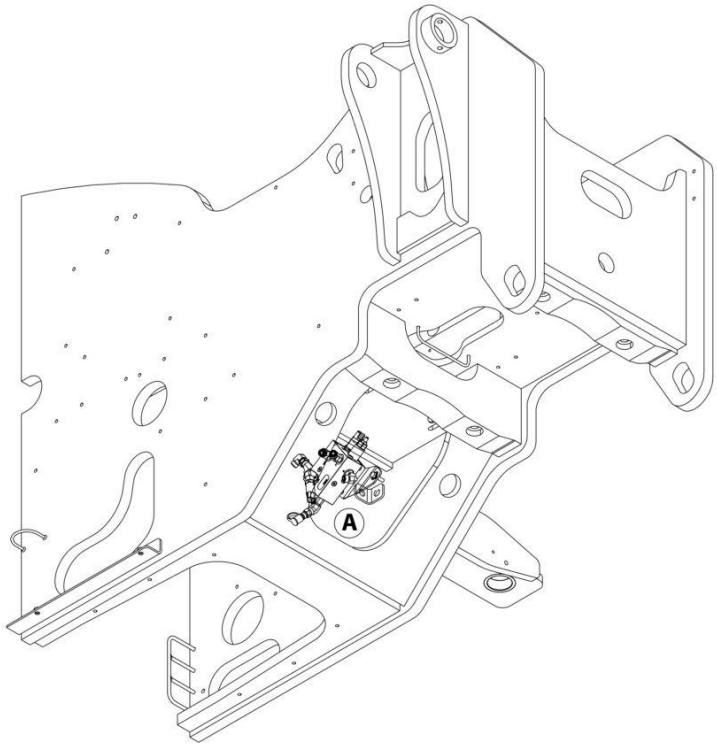

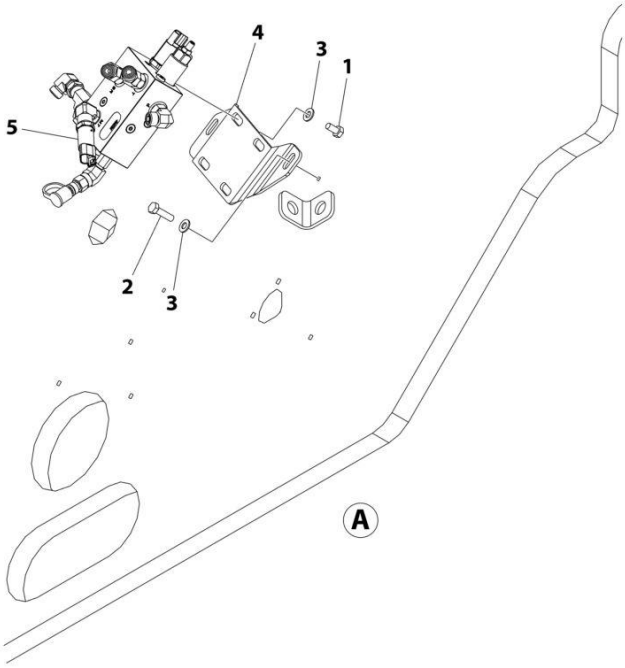

ART_1001266508

FIGURE 8-33. BRAKE VALVE RELAY INSTALLATION

ITEM	PART NUMBER	QTY	DESCRIPTION	REV
	1001266508	Ref	BRAKE RELAY VALVE INSTALLATION	B
1	0760808	4	Bolt M8 x 16	
2	0760814	2	Bolt M8 x 30	
3	4711500	6	Washer 5/16	
4	1001266506	1	Plate, Valve Mounting	
5	1001266507	1	Assembly, Brake Relay Valve (See Separate Breakdown in this Section)	

FIGURE 8-34. BRAKE VALVE RELAY ASSEMBLY

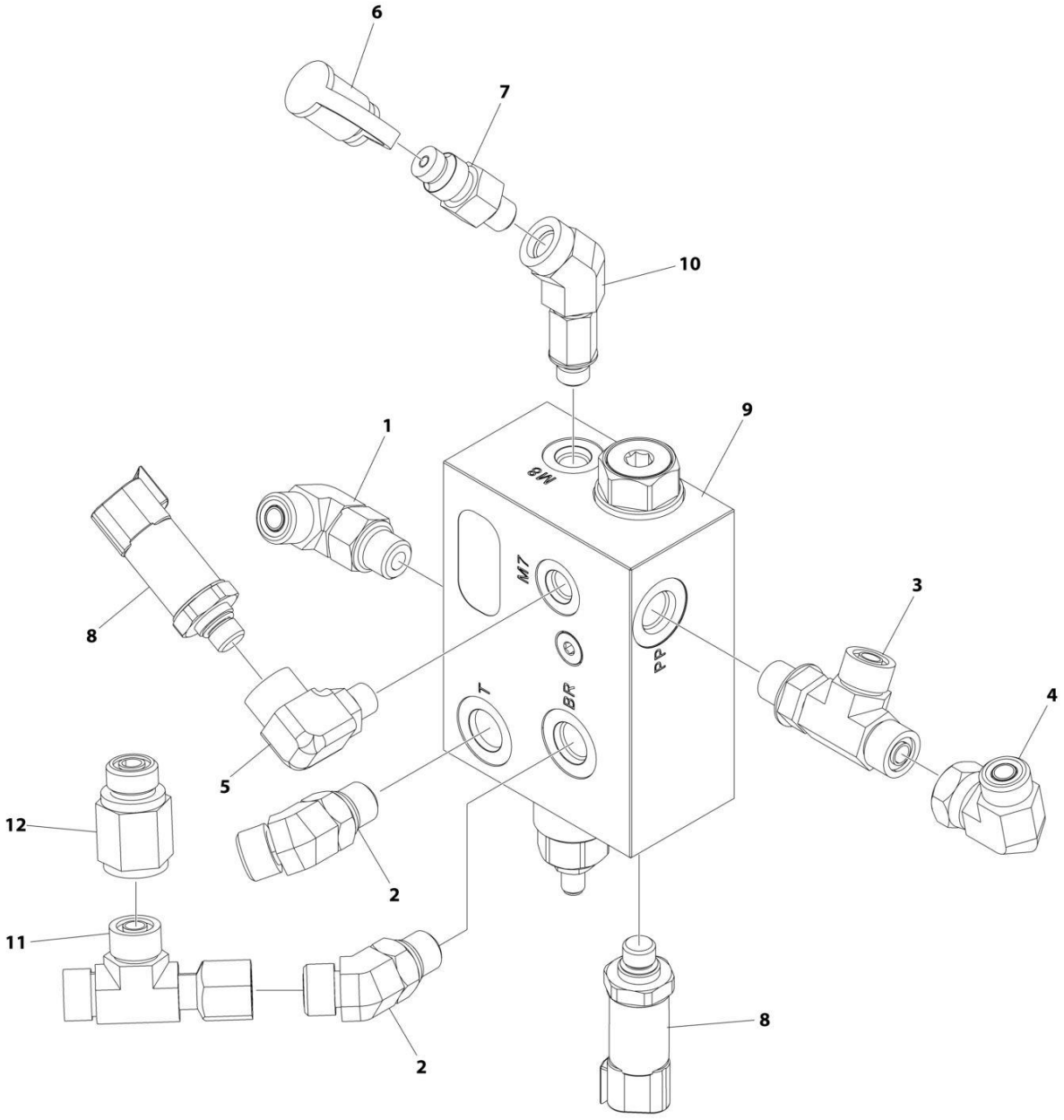

ART_1001266507

FIGURE 8-34. BRAKE VALVE RELAY ASSEMBLY

ITEM	PART NUMBER	QTY	DESCRIPTION	REV
	1001266507	Ref	BRAKE RELAY VALVE ASSEMBLY	C
1	2130606	1	Fitting, 90	
2	2150606	2	Fitting, 45 ORFS	
3	2170306	1	Fitting, Tee	
4	2172106	1	Fitting, 90	
5	2221116	1	Fitting, 90	
6	8430032	1	Plug	
7	8430033	1	Fitting	
8	1001147340	2	Sensor, Pressure Transducer	
9	1001266354	1	Brake Relay Valve	
9	70030289	1	Valve, Pressure Relieving	
10	1001269458	1	Fitting, 45	
11	2170706	1	Fitting, Tee ORFS/FSORFS/ORFS	
12	4641316	1	Valve, Check	

FIGURE 8-35. SPEED CONTROL VALVE INSTALLATION

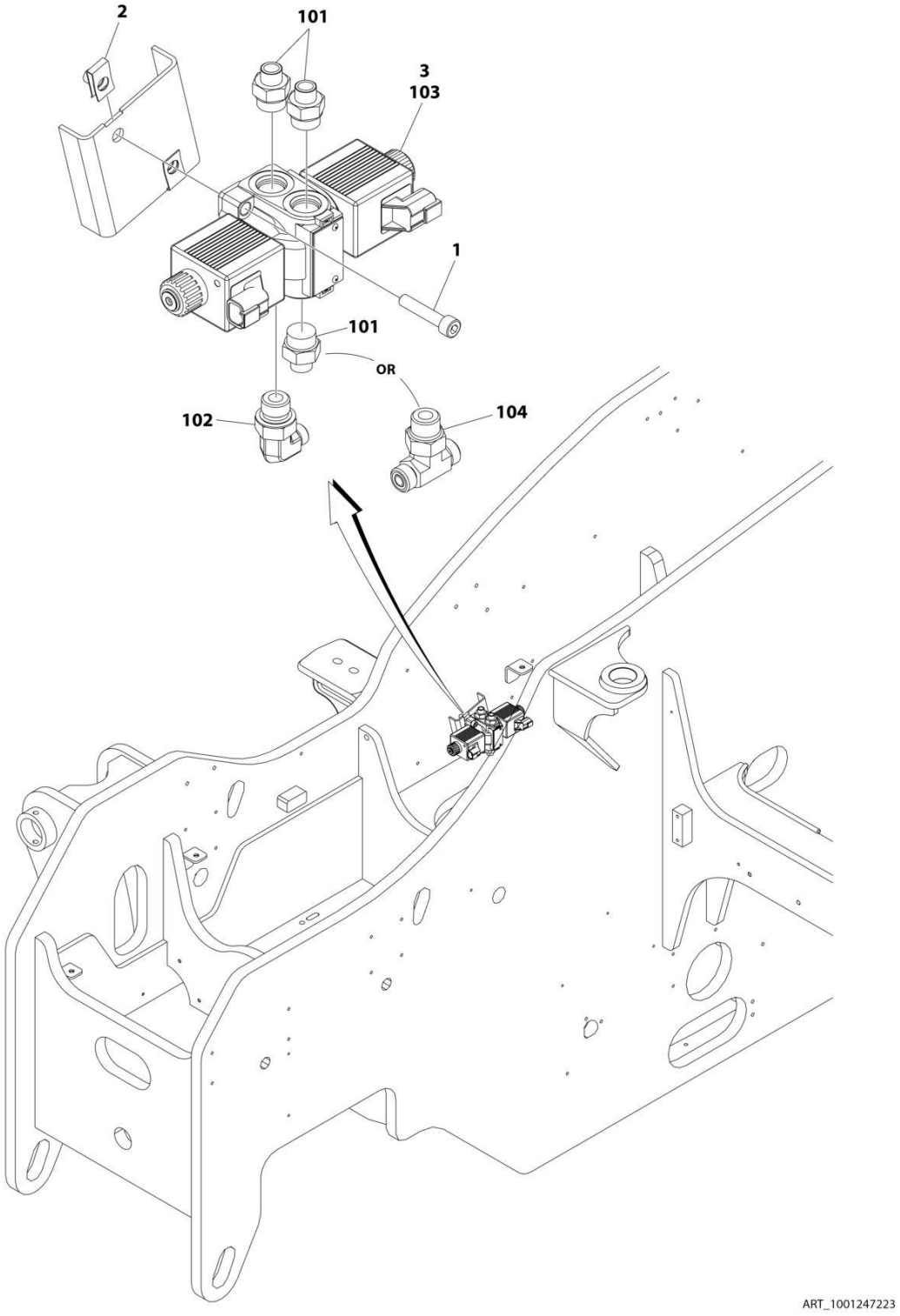

FIGURE 8-35. SPEED CONTROL VALVE INSTALLATION

ITEM	PART NUMBER	QTY	DESCRIPTION	REV
	1001247223	Ref	Speed Control Valve Installation	A
1	4031912	2	Bolt, M8X40	
2	8310686	2	Nut, Retainer M8X12.5	
3	1001247222	1	Speed Control Valve Assembly	B
101	2110408	AR	Fitting, Straight ORFS	
102	2130408	1	Fitting	
103	4641520	1	Valve, Speed Control	
104	88662447	1	Fitting, Tee ORFS/ORB/ORFS	

FIGURE 8-36. STEERING SELECT VALVE INSTALLATION

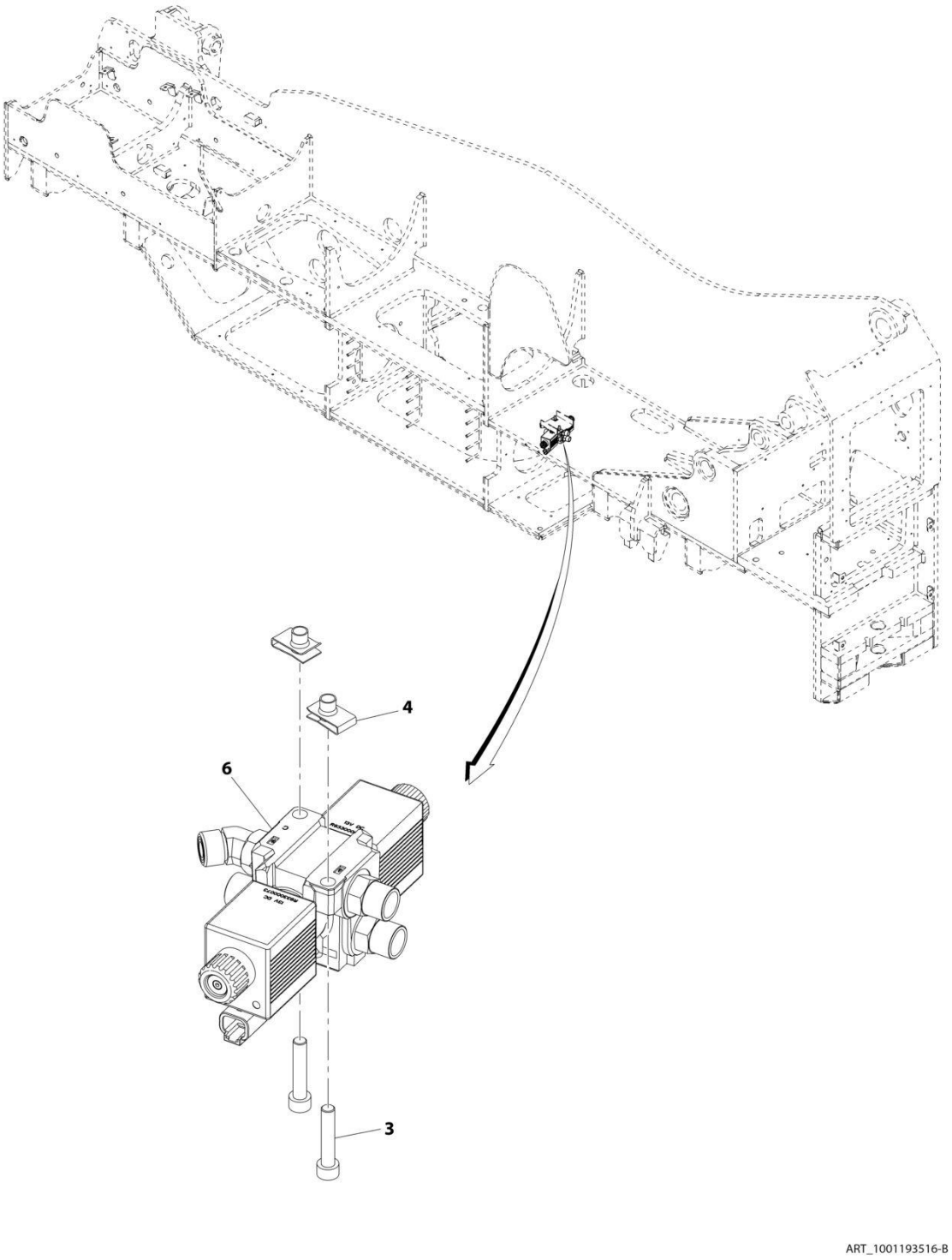

FIGURE 8-36. STEERING SELECT VALVE INSTALLATION

ITEM	PART NUMBER	QTY	DESCRIPTION	REV
	1001193516	Ref	Steering Select Valve Installation	B
3	4031912	2	Bolt, M8X40	
4	8310686	2	Nut, M8X12.5	
6	1001212418	1	Assembly, Steering Select Valve (See Separate Breakdown in this Section)	

FIGURE 8-37. STEERING SELECT VALVE & FITTING ASSEMBLY

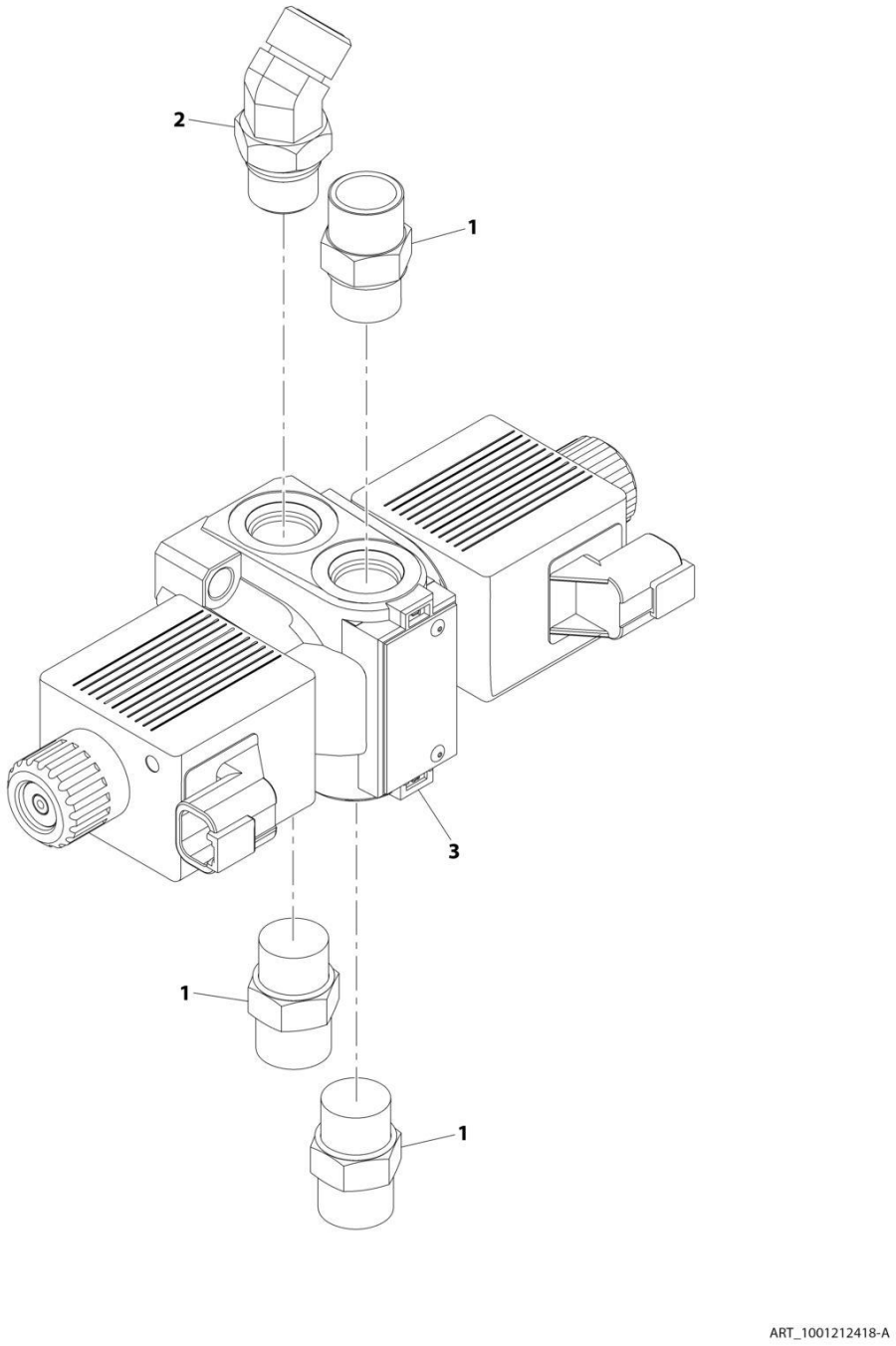

FIGURE 8-37. STEERING SELECT VALVE & FITTING ASSEMBLY

ITEM	PART NUMBER	QTY	DESCRIPTION	REV
	1001212418	Ref	Steering Select Valve Assembly	A
1	2110808	3	Fitting, Straight ORFS	
2	2150808	1	Fitting, 45 ORFS	
3	1001153748	1	Valve, Steering Select (See Separate Breakdown in HYDRAULIC COMPONENTS Section)	

FIGURE 8-38. EMERGENCY LOWERING INSTALLATION

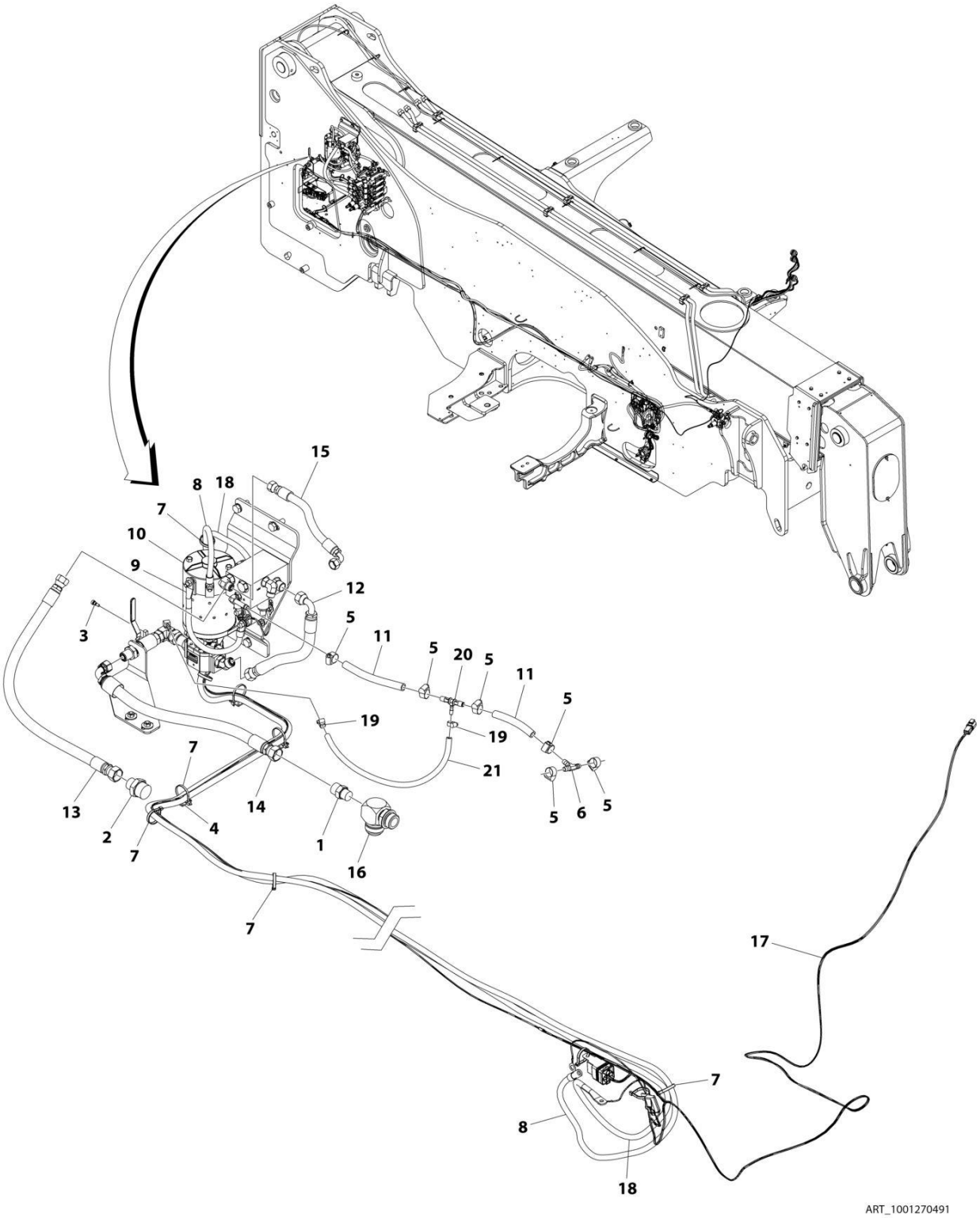

FIGURE 8-38. EMERGENCY LOWERING INSTALLATION

ITEM	PART NUMBER	QTY	DESCRIPTION	REV
	1001270491	Ref	EMERGENCY LOWERING INSTALLATION	A
1	2111010	1	Fitting, Straight ORFS	
2	2111016	1	Fitting, Straight ORFS	
3	3900248	1	Screw	
4	4460234	3	Mount, Tie-Strap	
5	8410013	6	Gear Clamp	
6	1001003934	1	Fitting	
7	1001008559	9	Strap	
8	1001272605	1	Cable	
9	1001272607	1	Cable	
10	1001270492	1	Installation, Power Unit (See Separate Breakdown in this Section	
11	1001270496	1	Hose	
12	1001270497	1	Hose	
13	1001270498	1	Hose	
14	1001270499	1	Hose	
15	1001270500	1	Hose	
16	1001270501	1	Fitting	
17	1001272339	1	Harness, Emergency Lowering (See Separate Breakdown in ELECTRICAL Section)	
18	1001272606	1	Cable	
19	8405009	2	Clamp, Gear	
20	1001235725	1	Fitting	
21	1001282265	1	Hose	

FIGURE 8-39. POWER UNIT INSTALLATION

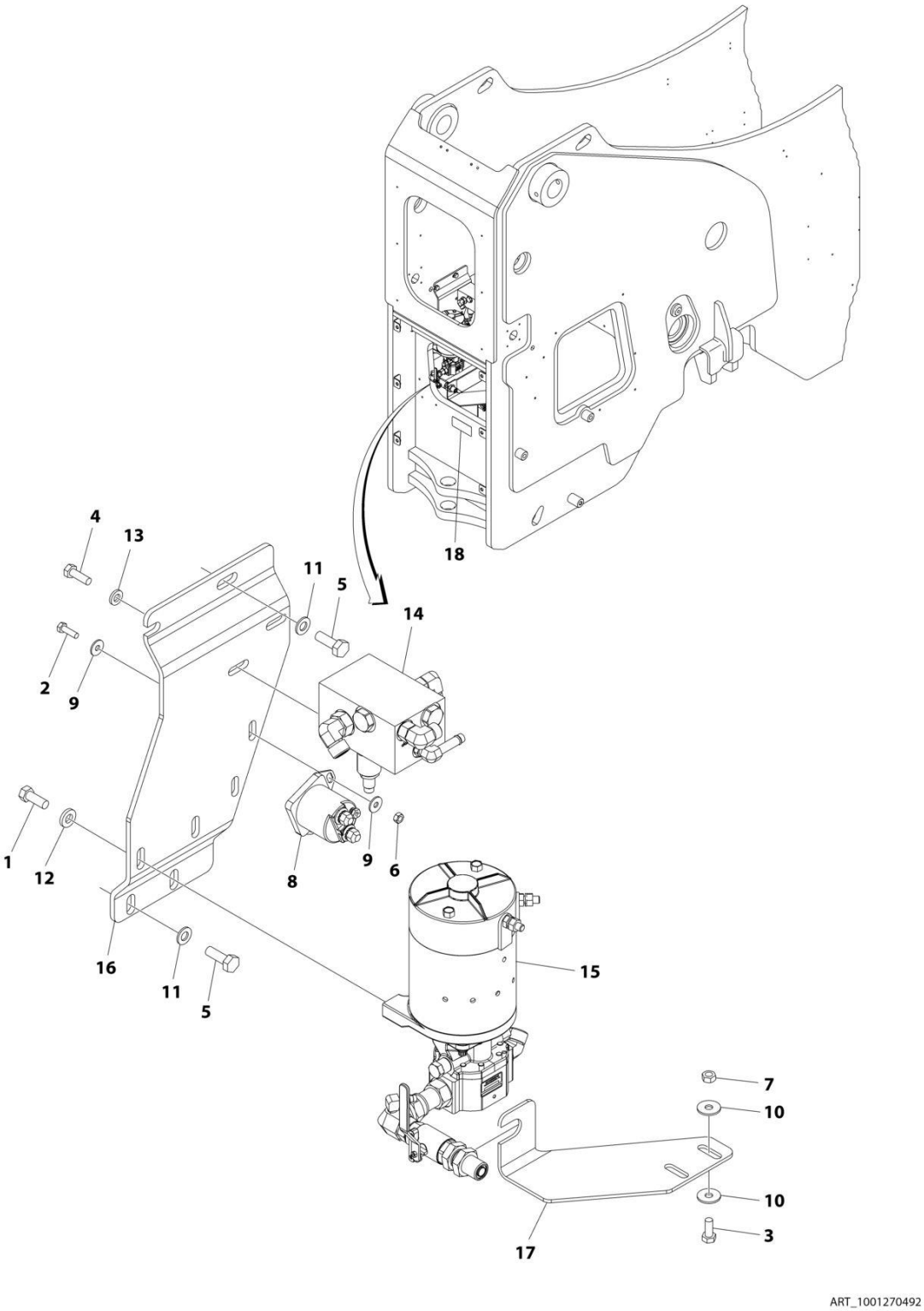

FIGURE 8-39. POWER UNIT INSTALLATION

ITEM	PART NUMBER	QTY	DESCRIPTION	REV
	1001270492	Ref	POWER UNIT INSTALLATION	A
1	0641608	2	Bolt 3/8 x 1	
2	0760610	2	Bolt M6 x 20	
3	0760810	2	Bolt M8 x 20	
4	0760812	2	Bolt M8 x 25	
5	0761014	4	Bolt M10 x 30	
6	3290601	2	Nut M6 x 1	
7	3290801	2	Nut M8 x 1.25	
8	3740067	1	Relay, Solenoid Valve	
9	4811702	4	Washer M6	
10	4811902	4	Washer M8	
11	4812000	4	Washer M10	
12	4891600	2	Washer 3/8	
13	5240800	2	Washer M8	
14	1001270494	1	Assembly, Auxiliary Reducing Valve (See Separate Breakdown in HYDRAULIC COMPONENTS Section)	
15	1001270495	1	Assembly, Pump (See Separate Breakdown in HYDRAULIC COMPONENTS Section)	
16	1001271295	1	Bracket	
17	1001271836	1	Bracket	
18	1001285013	1	Decal, E-Lowering	

FIGURE 8-40. AUXILIARY REDUCING VALVE ASSEMBLY

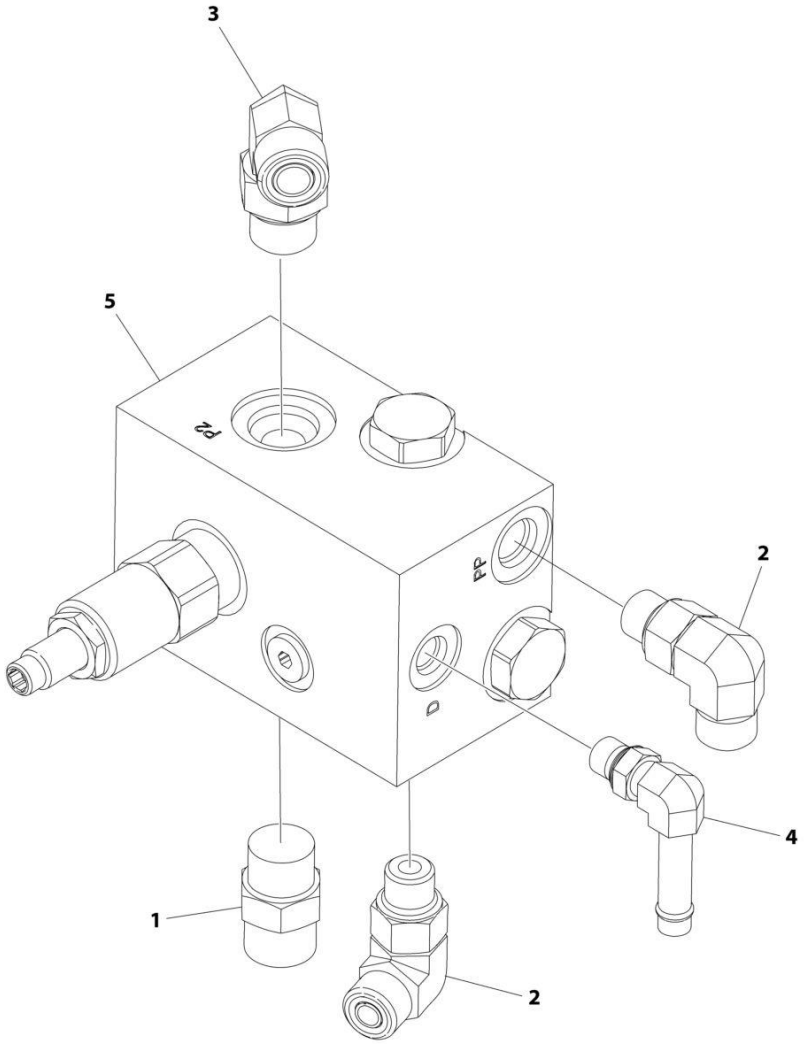

ART_1001270494

FIGURE 8-40. AUXILIARY REDUCING VALVE ASSEMBLY

ITEM	PART NUMBER	QTY	DESCRIPTION	REV
	1001270494	Ref	AUXILIARY REDUCING VALVE ASSEMBLY	A
1	2110808	1	Fitting, Straight ORFS	
2	2130606	2	Fitting, 90	
3	2130808	1	Fitting, 90 ORFS	
4	1001263034	1	Fitting, Pipe	
5	1001266879	1	Valve, Auxiliary Reducing	

FIGURE 8-41. AUX POWER PUMP

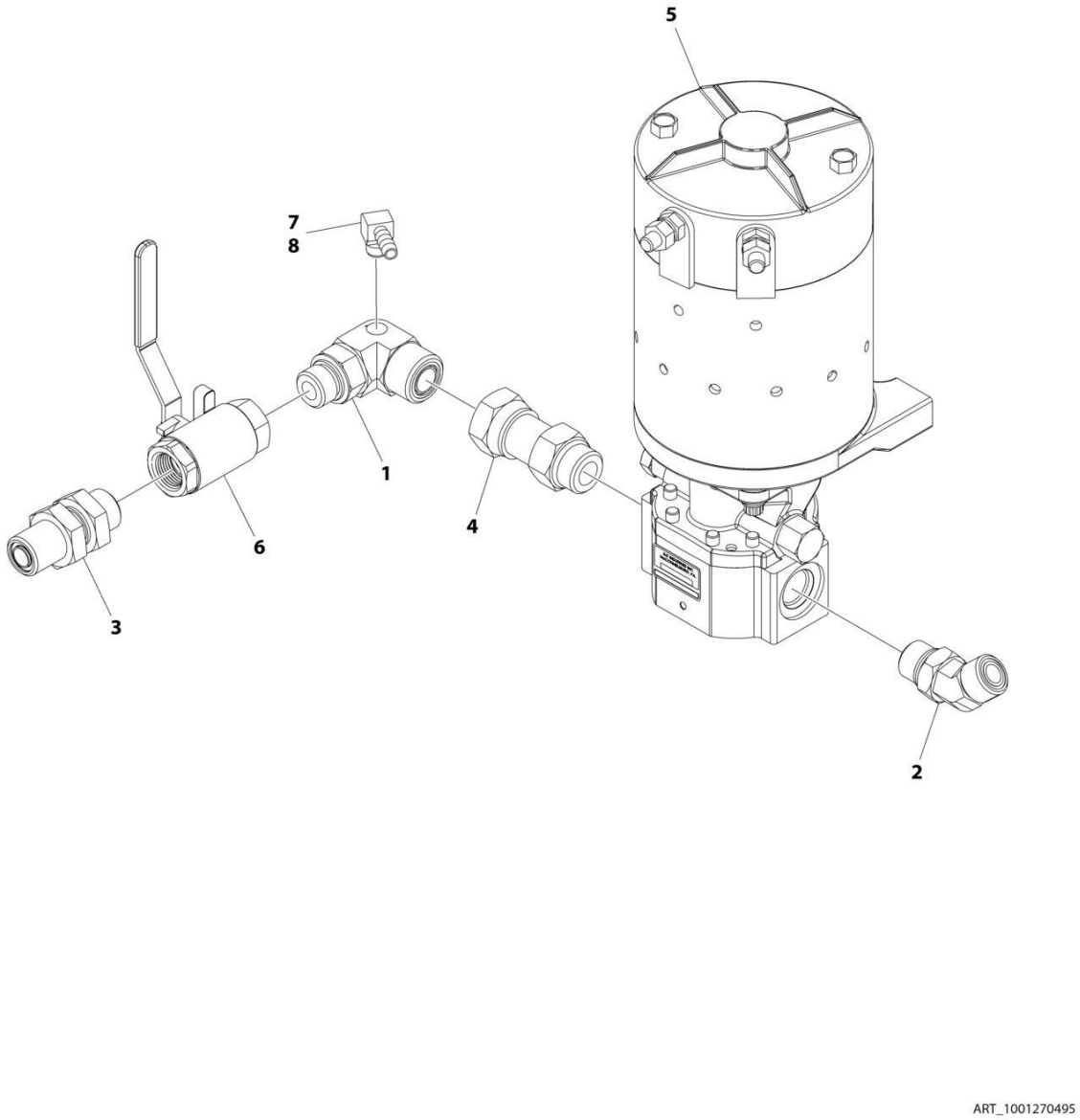

FIGURE 8-41. AUX POWER PUMP

ITEM	PART NUMBER	QTY	DESCRIPTION	REV
	1001270495	Ref	PUMP ASSEMBLY	A
1	1001283429	1	Fitting	
2	2150808	1	Fitting, 45 ORFS	
3	8770136	1	Fitting	
4	1001001556	1	Fitting, Straight	
5	1001271161	1	Pump, Auxiliary Power	
6	1001271623	1	Ball Valve	
7	8420213	1	Fitting, 90	
8	1001187519	AR	Adhesive	

SECTION 9 - HYDRAULIC COMPONENTS

FIGURE 9-1. CYLINDER INSTALLATION - EXTEND/RETRACT

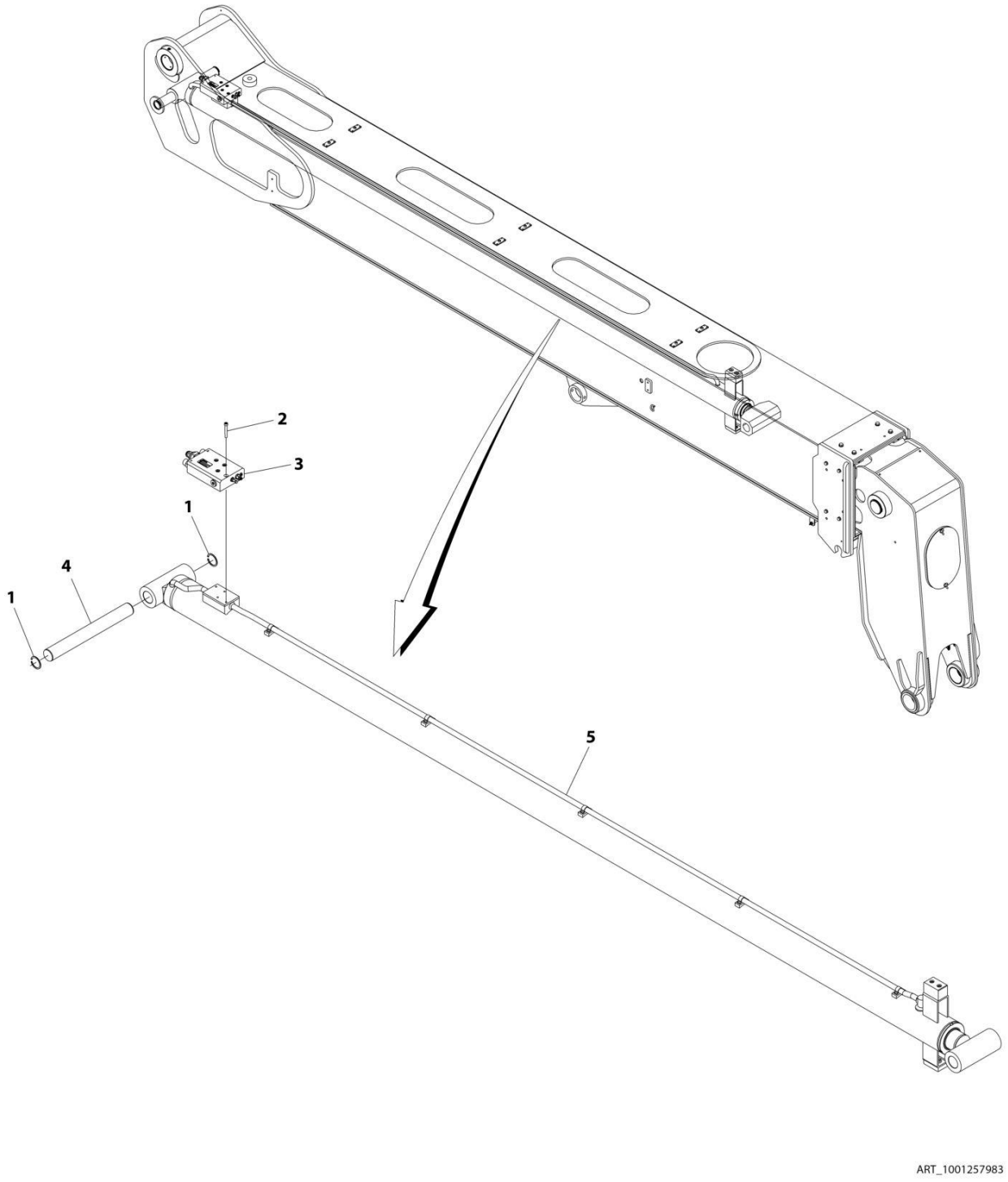

FIGURE 9-1. CYLINDER INSTALLATION - EXTEND/RETRACT

ITEM	PART NUMBER	QTY	DESCRIPTION	REV
	1001257983	Ref	EXTEND/RETRACT CYLINDER INSTALLATION	B
1	314689	2	Ring, Retaining	
2	4031916	4	Bolt M8 x 60	
3	1001212312	1	Counterbalance Valve & Fittings Sub-Assembly (see Separate Breakdown in this Section)	
4	1001257984	1	Pin	
5	1001275162	1	Cylinder Assembly - Extend/Retract (See Separate Breakdown in this Section)	

FIGURE 9-2. CYLINDER ASSEMBLY- EXTEND/RETRACT

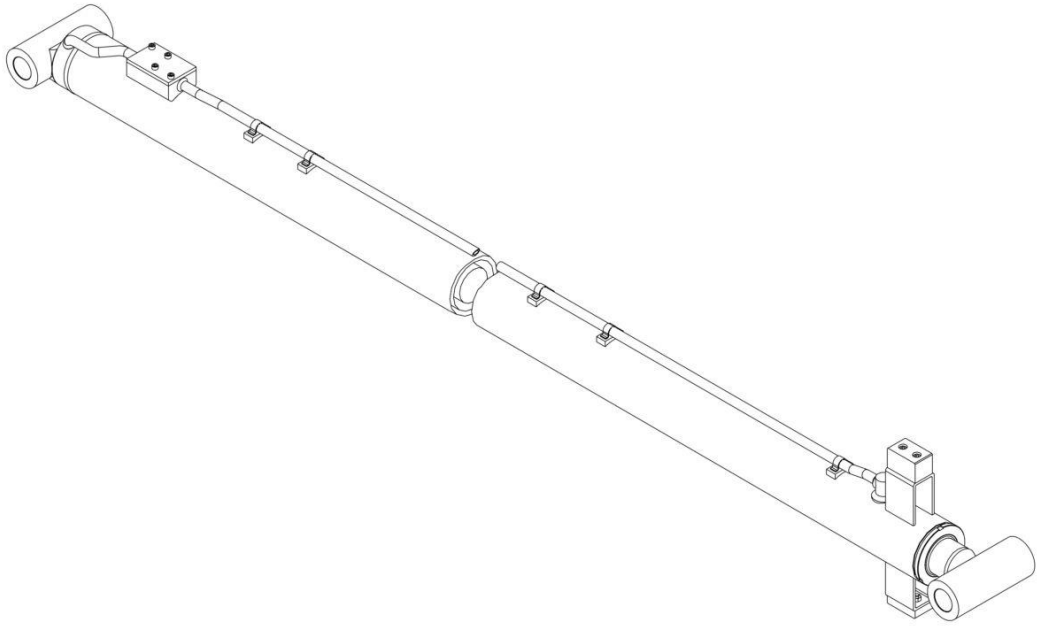

ART_1001275162

FIGURE 9-2. CYLINDER ASSEMBLY- EXTEND/RETRACT

ITEM	PART NUMBER	QTY	DESCRIPTION	REV
	1001275162	Ref	Extend/Retract Cylinder	B
		Ref	Note: Original Cylinder May Have Been Replaced with Service Replacement. Identify PN Stamped on Cylinder Before Ordering Parts.	
		Ref	Note: No Service Parts Available at Time of Printing.	

FIGURE 9-3. CYLINDER ASSEMBLY - FRAME LEVEL

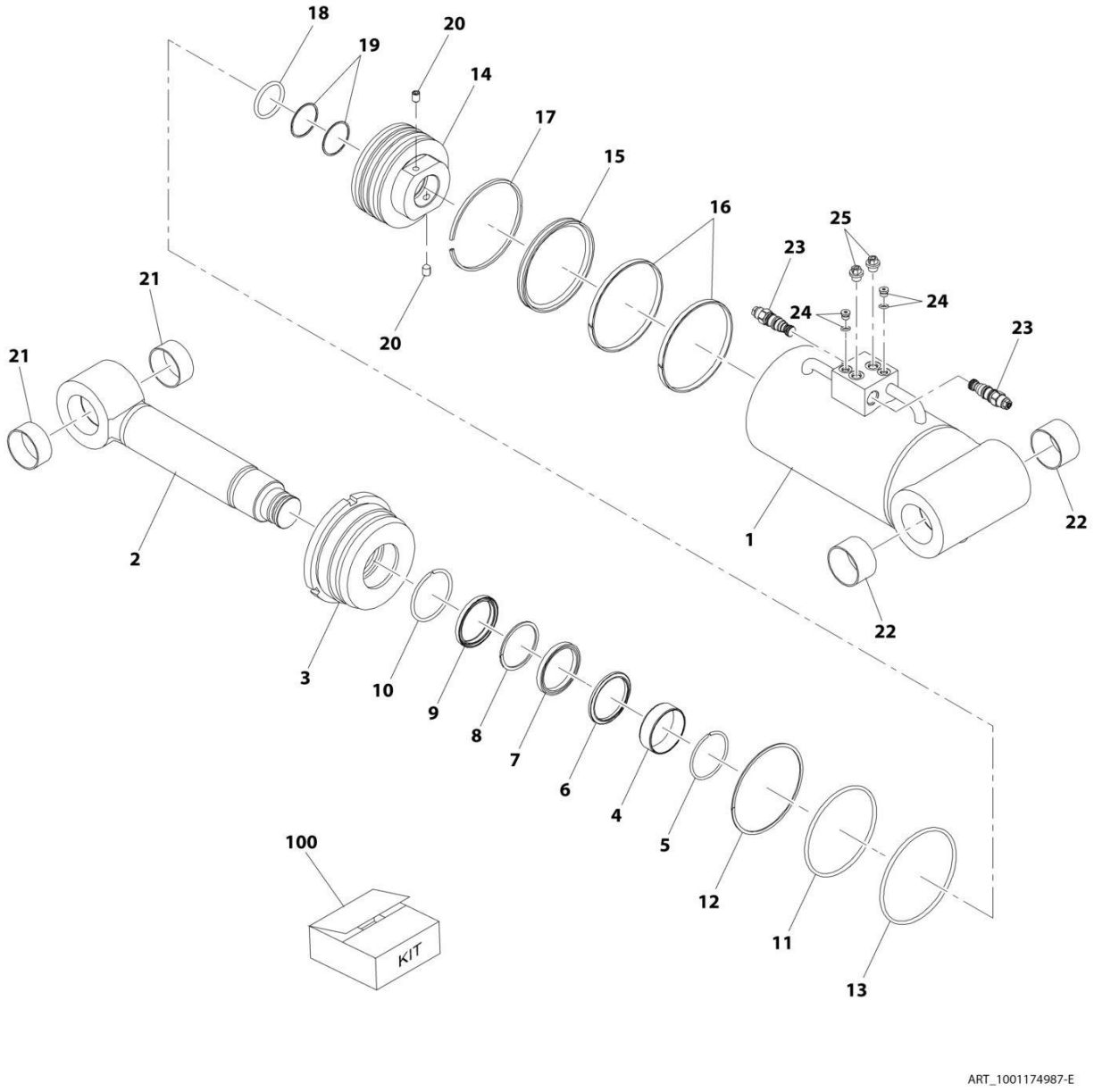

FIGURE 9-3. CYLINDER ASSEMBLY - FRAME LEVEL

ITEM	PART NUMBER	QTY	DESCRIPTION	REV
	1001174987	Ref	Frame Level Cylinder Assembly	E
		Ref	**Note: Original Cylinder May Have Been Replaced with Service Replacement. Identify PN Stamped on Cylinder Before Ordering Parts.**	
1	N.S.S.	1	Barrel	
2	70030115	1	Rod Assembly (includes item 21)	
3	70030116	1	Rod Cover Assembly (includes item 4 & 5)	
4	N.S.S.	1	Bushing	
5	N.S.S.	1	Ring, Retaining	
6	Kit	1	Buffer	
7	Kit	1	U-Packing	
8	Kit	1	Ring, Backup	
9	Kit	1	Wiper	
10	Kit	1	Ring, Retaining	
11	Kit	1	O-Ring	
12	Kit	1	Ring, Backup	
13	Kit	1	O-Ring	
14	70030117	1	Piston (includes item 20)	
15	Kit	1	Seal, Piston	
16	Kit	2	Ring, Wear	
17	Kit	1	Ring, Dust	
18	Kit	1	O-Ring	
19	Kit	2	Ring, Backup	
20	N.S.S.	2	Set Screw	
21	70030118	2	Bushing	
22	70030119	2	Bushing	
23	1001214653	2	Valve, Counterbalance	
24	N.S.S.	2	Plug with O-Ring	
25	N.S.S.	2	Cap, Dust	
100	70030120	1	Kit, Seal (includes items 6 thru 13 & 15 thru 19)	

FIGURE 9-4. CYLINDER INSTALLATION - LIFT

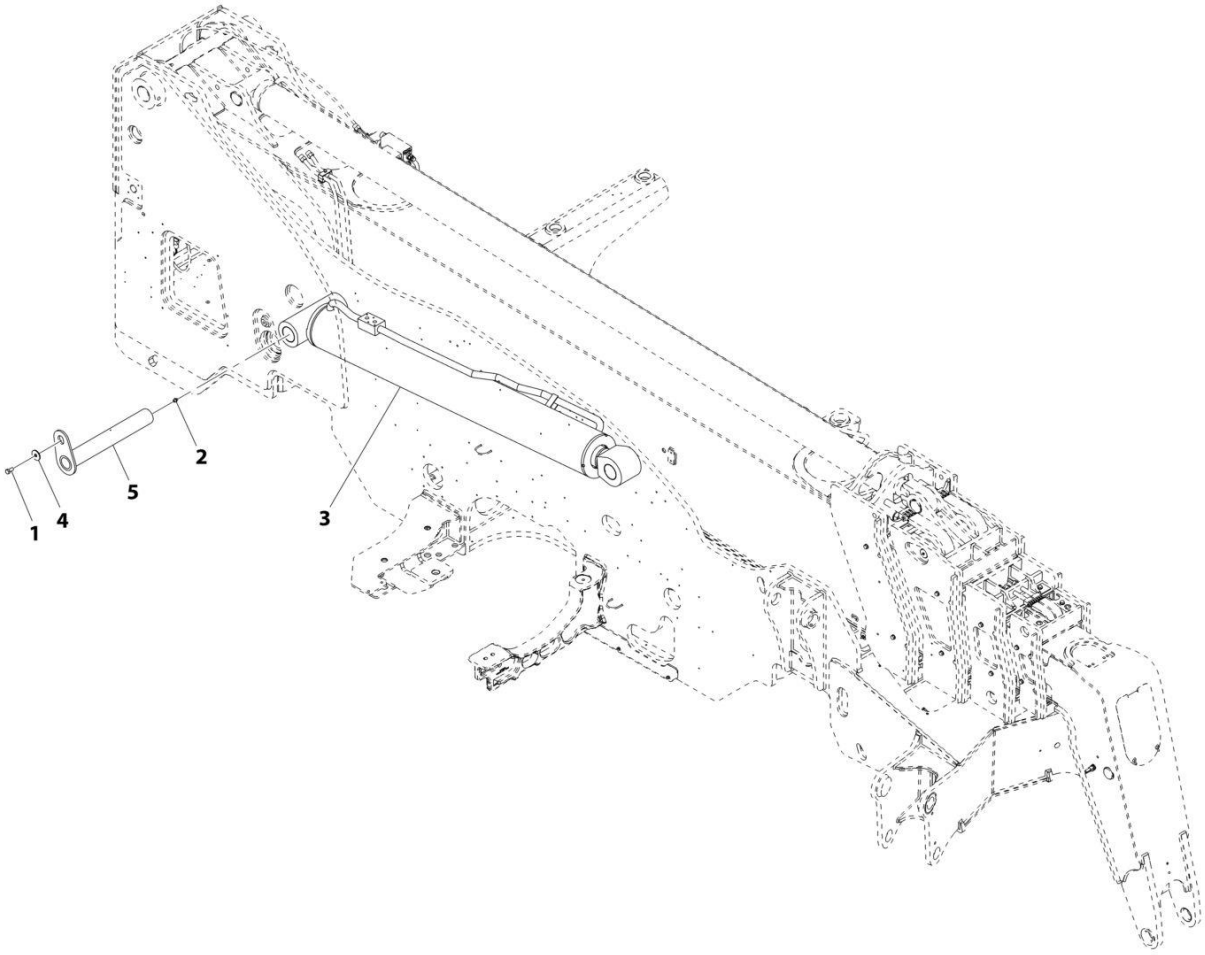

ART_1001205890-A

FIGURE 9-4. CYLINDER INSTALLATION - LIFT

ITEM	PART NUMBER	QTY	DESCRIPTION	REV
	1001205890	Ref	Lift Cylinder Installation	A
1	0771414	1	Bolt, M14X30	
2	2160016	1	Fitting, Grease	
3	1001174984	1	Cylinder, Lift (See Separate Breakdown in this Section)	
4	1001217226	1	Washer	
5	1001244574	1	Pin	

FIGURE 9-5. CYLINDER ASSEMBLY - LIFT

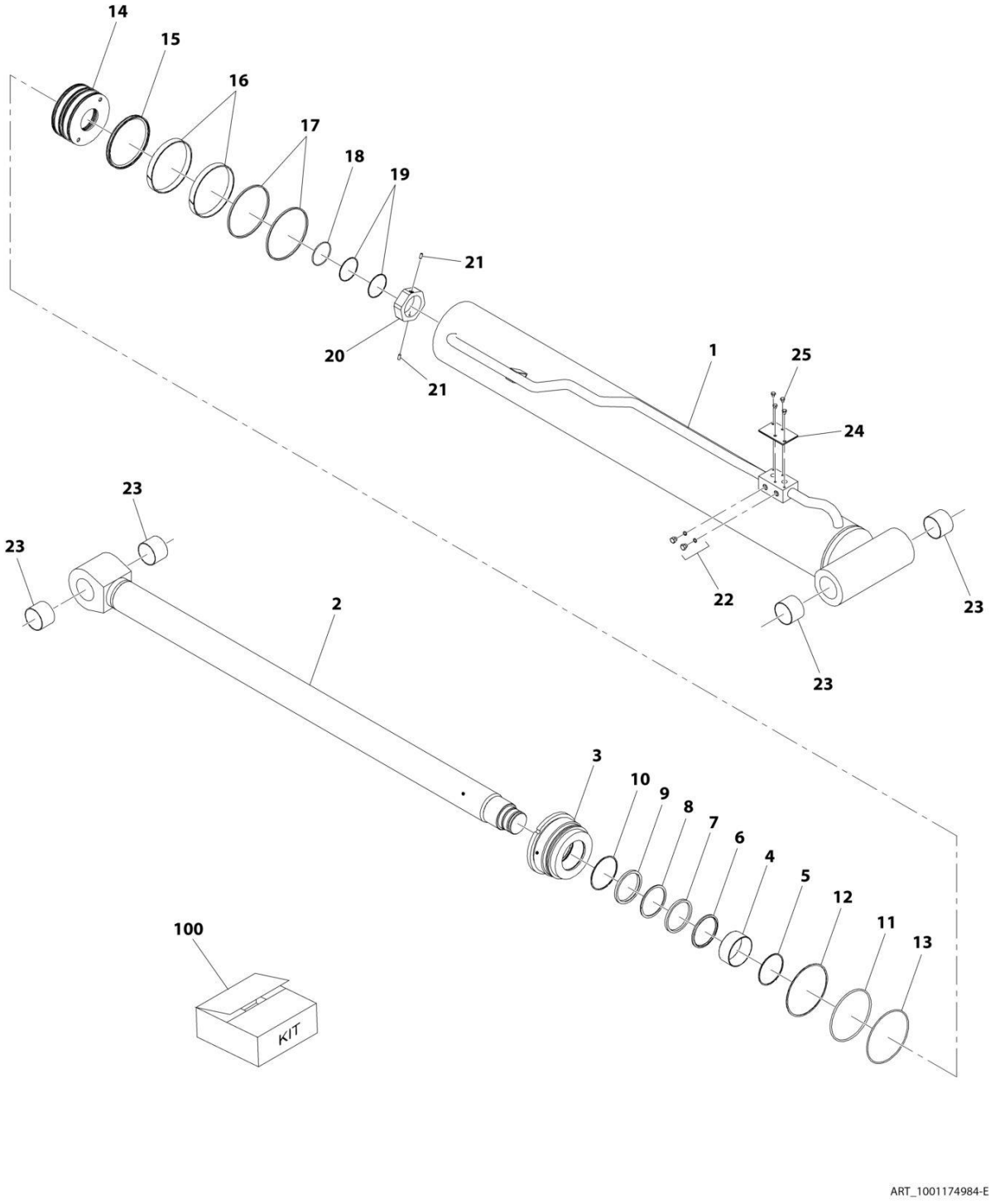

FIGURE 9-5. CYLINDER ASSEMBLY - LIFT

ITEM	PART NUMBER	QTY	DESCRIPTION	REV
	1001174984	Ref	Lift Cylinder Assembly	E
		Ref	**Note: Original Cylinder May Have Been Replaced with Service Replacement. Identify PN Stamped on Cylinder Before Ordering Parts.**	
1	N.S.S.	1	Barrel	
2	70030109	1	Rod Assembly (Includes item 23)	
3	70030110	1	Rod Cover Assembly	
4	N.S.S.	1	Bushing	
5	N.S.S.	1	Ring, Retaining	
6	Kit	1	Seal, Buffer	
7	Kit	1	U-Packing	
8	Kit	1	Ring, Backup	
9	Kit	1	Wiper	
10	Kit	1	Ring, Retaining	
11	Kit	1	O-Ring	
12	Kit	1	Ring, Backup	
13	Kit	1	O-Ring	
14	70030111	1	Piston	
15	Kit	1	Seal, Piston	
16	Kit	2	Ring, Wear	
17	Kit	2	Ring, Dust	
18	Kit	1	O-Ring	
19	Kit	2	Ring, Backup	
20	70030112	1	Piston Nut (Includes item 21)	
21	N.S.S.	2	Set Screw	
22	N.S.S.	2	Plug with O-Ring	
23	70030113	4	Bushing	
24	N.S.S.	1	Cover, Dust	
25	N.S.S.	4	Bolt	
100	70030114	1	Kit, Seal (includes items 6 thru 13 & 15 thru 19)	

FIGURE 9-6. CYLINDER ASSEMBLY - QUICK COUPLER

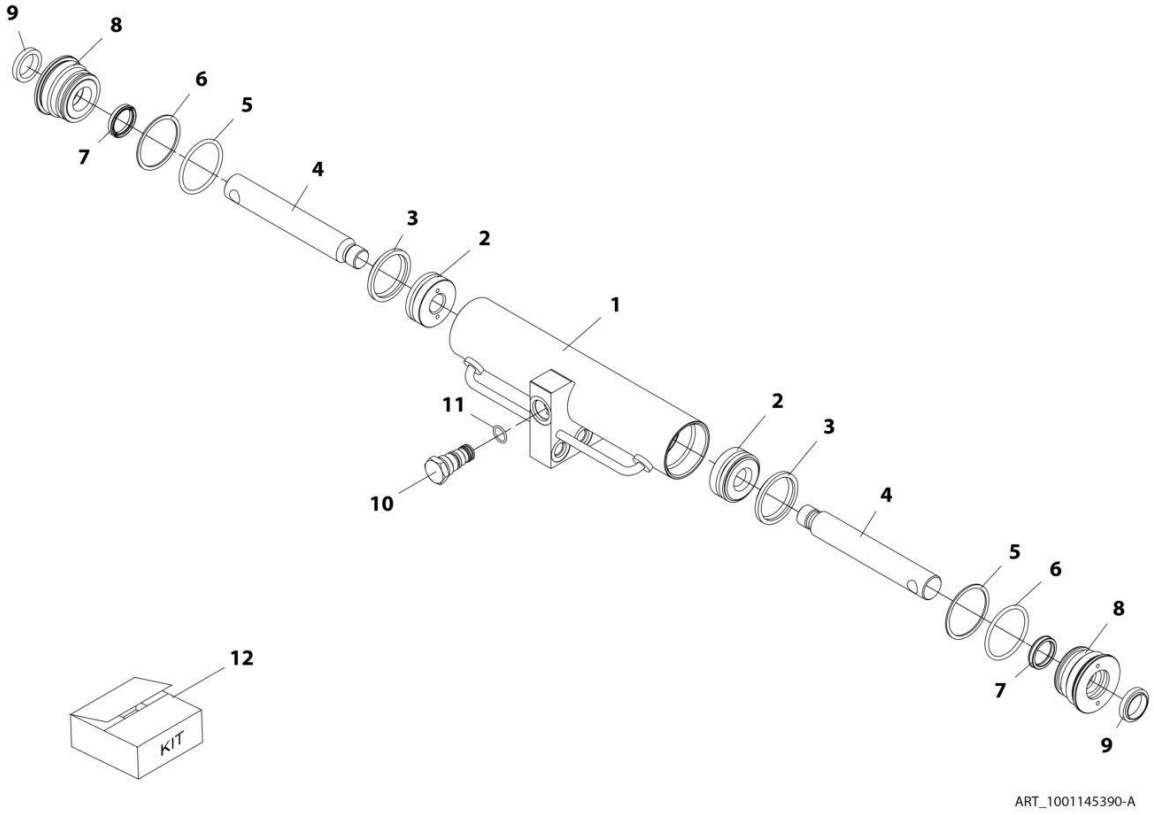

FIGURE 9-6. CYLINDER ASSEMBLY - QUICK COUPLER

ITEM	PART NUMBER	QTY	DESCRIPTION	REV
	1001145390	Ref	Coupler Locking Cylinder	A
		Ref	**Note: Original Cylinder May Have Been Replaced with Service Replacement. Identify PN Stamped on Cylinder Before Ordering Parts.**	
1	70024164	2	Body	
2	70024165	2	Piston	
3	Kit	2	Seal, Piston	
4	70024166	2	Rod	
5	Kit	2	O-Ring	
6	Kit	2	Ring, Backup	
7	Kit	2	Seal, Rod	
8	70024167	2	Gland	
9	Kit	2	Seal, Wiper	
10	1001007056	1	Valve, Check	
11	91574001	1	Seal, Check Valve	
12	70024168	1	Kit, Seal (includes items 3, 5, 6, 7 & 9)	

FIGURE 9-7. CYLINDER ASSEMBLY - TILT

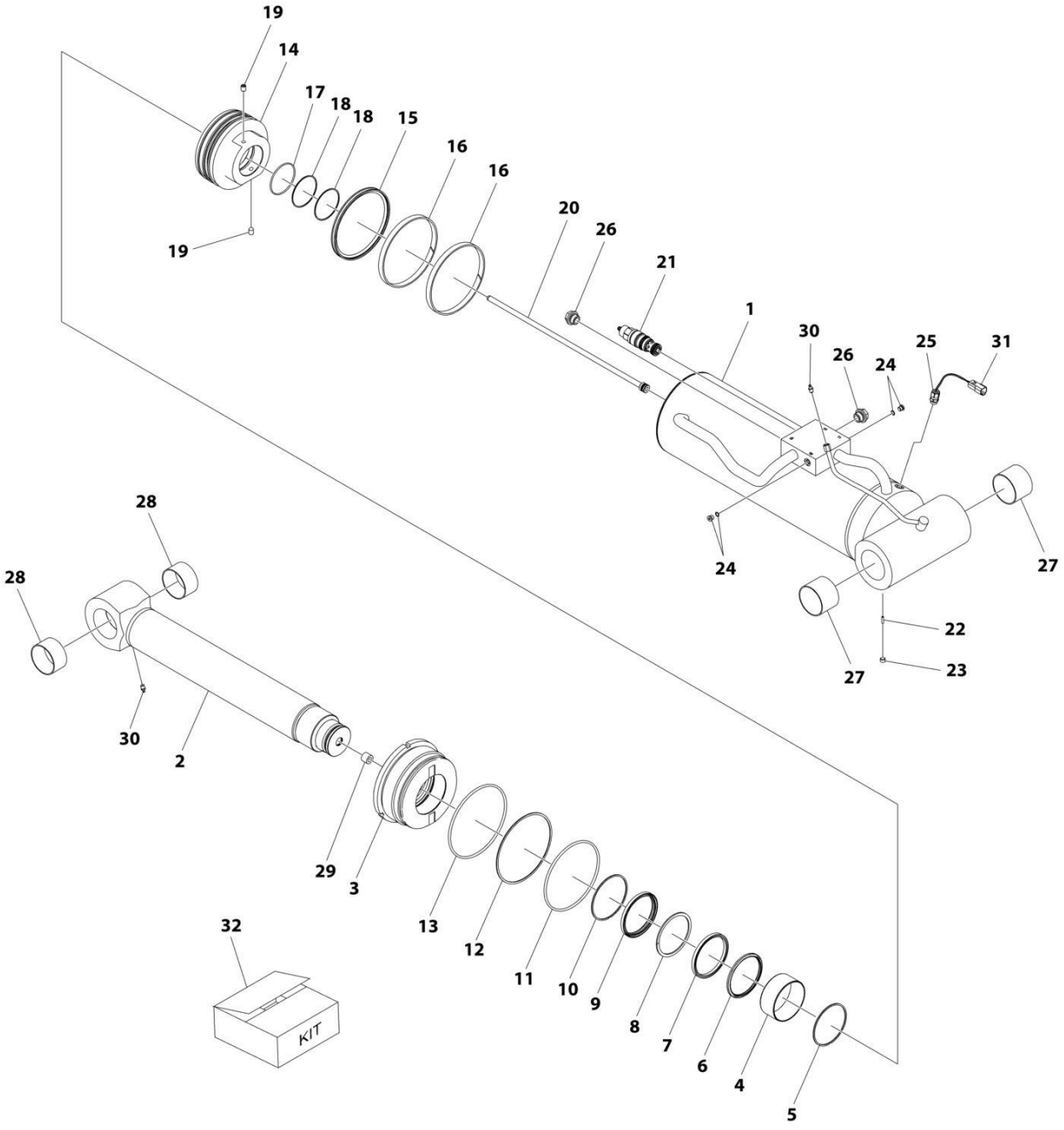

ART_1001174983

FIGURE 9-7. CYLINDER ASSEMBLY - TILT

ITEM	PART NUMBER	QTY	DESCRIPTION	REV
	1001174983	Ref	TILT CYLINDER ASSEMBLY	E
		Ref	**Note: Original Cylinder May Have Been Replaced with Service Replacement. Identify PN Stamped on Cylinder Before Ordering Parts.**	
1	N.S.S.	1	Barrel	
2	70030267	1	Rod Assembly (includes items 23, 28 thru 30)	
3	70030268	1	Rod Cover Assembly (includes items 4, 5 & 28)	
4	N.S.S.	1	Rod Bushing	
5	N.S.S.	1	Retaining Ring	
6	Kit	1	Buffer Seal	
7	Kit	1	U-Packing	
8	Kit	1	Backup Ring	
9	Kit	1	Dust Wiper	
10	Kit	1	Retaining Ring	
11	Kit	1	O-Ring	
12	Kit	1	Backup Ring	
13	Kit	1	O-Ring	
14	70030269	1	Piston Assembly (includes item 19)	
15	Kit	1	Piston Seal	
16	Kit	2	Wear Ring	
17	Kit	1	O-Ring	
18	Kit	2	Backup Ring	
19	N.S.S.	2	Set Screw	
20	N.S.S.	1	Sensor Assembly	
21	70028317	1	Counterbalance Valve	
22	N.S.S.	1	Set Screw	
23	N.S.S.	1	Plug	
24	70030270	2	Plug with O-Ring	
25	N.S.S.	1	Cable Gland	
26	N.S.S.	2	Dust Cap	
27	70030113	2	Bushing	
28	70030271	2	Bushing	
29	N.S.S.	1	Magnet Assembly	
30	N.S.S.	2	Grease Nipple	
31	N.S.S.	1	Connector Group	
32	70030272	1	Kit, Seal (includes items 6 thru 13 & 15 thru 17)	

FIGURE 9-8. MOTOR ASSEMBLY – HYDRAULIC

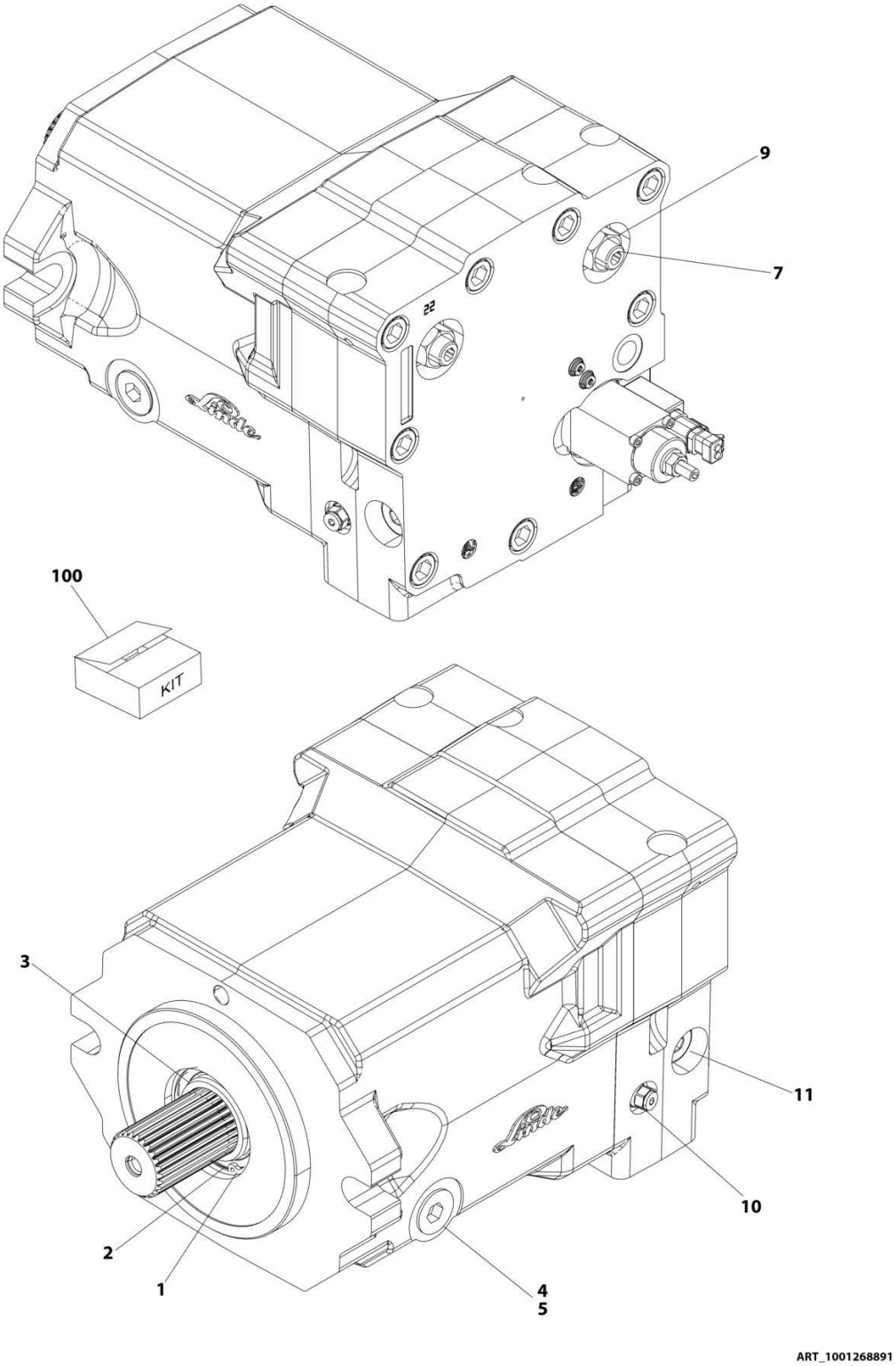

FIGURE 9-8. MOTOR ASSEMBLY – HYDRAULIC

ITEM	PART NUMBER	QTY	DESCRIPTION	REV
	1001268891	Ref	Hydraulic Motor	B
1	70030054	1	Ring, Snap	
2	70030055	1	Shim	
3	70030056	1	Seal, Shaft	
4	70030057	1	Plug (Includes Item 5)	
5	70030058	1	O-Ring	
7	70030059	1	Threaded Rod M16 x 70	
9	70030060	1	Nut M16	
10	70030061	1	Feed, Valve Assembly	
11	70030278	1	Switch, Valve Assembly	
100	70030063	1	Seal Kit	

FIGURE 9-9. PUMP ASSEMBLY - CHARGE

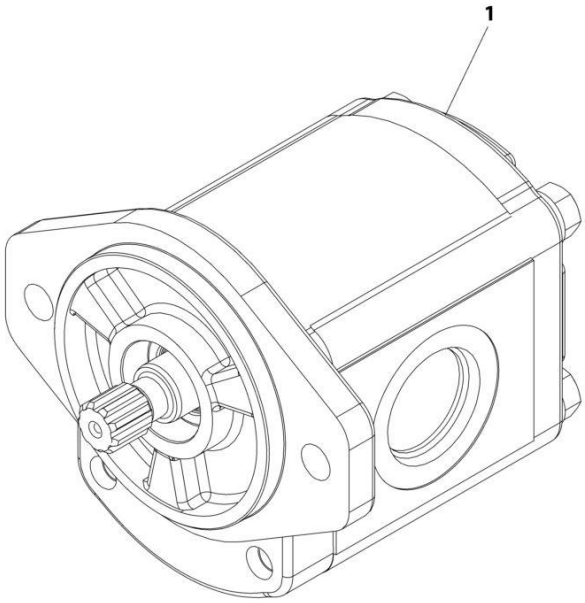

ART_1001243724-B

FIGURE 9-9. PUMP ASSEMBLY - CHARGE

ITEM	PART NUMBER	QTY	DESCRIPTION	REV
	1001243724	Ref	Charge Pump	B
	70006356	1	Seal kit	

FIGURE 9-10. PUMP ASSEMBLY - DEF MODULE

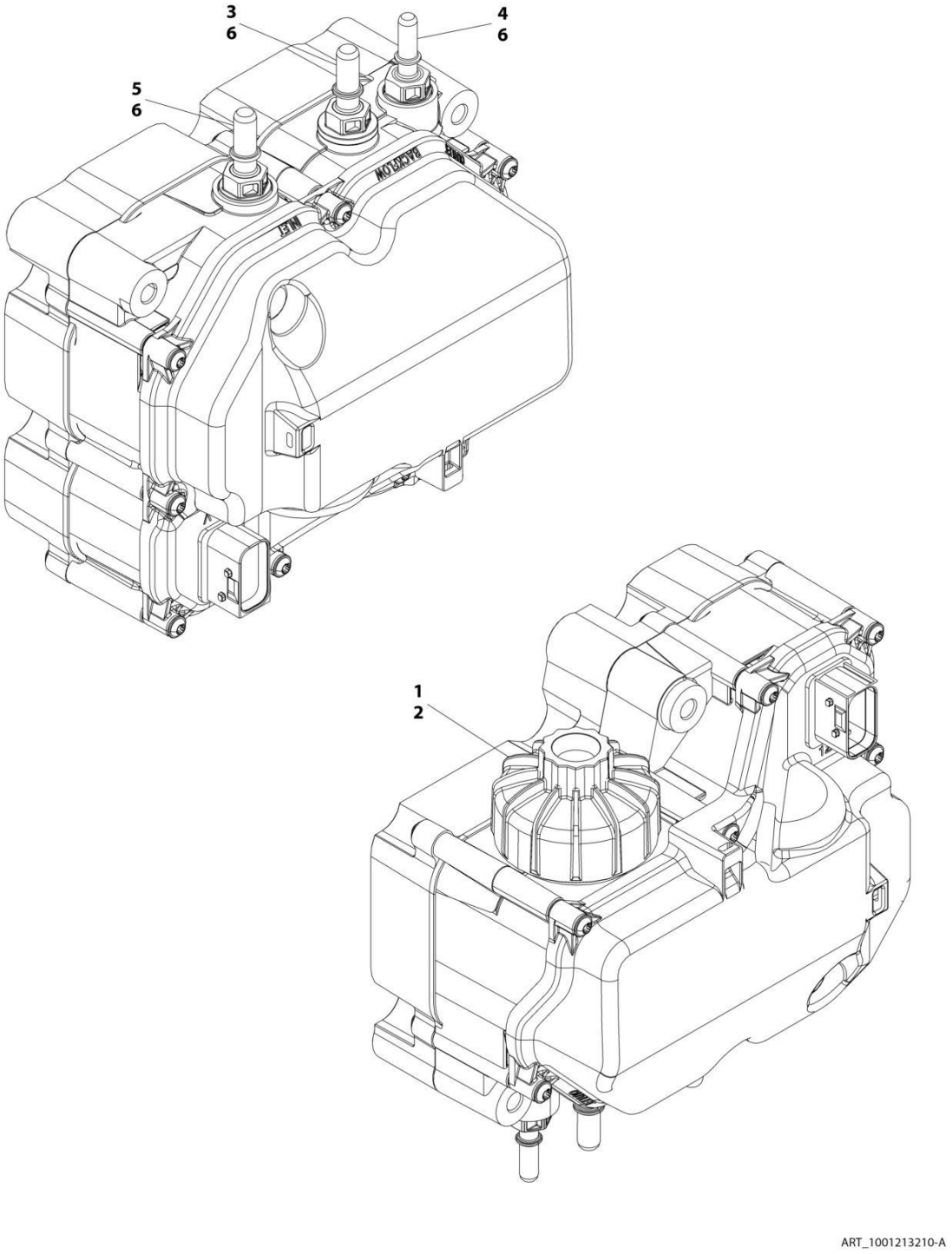

FIGURE 9-10. PUMP ASSEMBLY - DEF MODULE

ITEM	PART NUMBER	QTY	DESCRIPTION	REV
	1001213210	Ref	DEF Module Pump	B
1	70026248	1	Kit, Filter	
2	70026247	1	Cap, Filter	
3	70027705	1	Connector, Male (Backflow)	
4	70026245	1	Connector, Male (Outlet)	
5	70026244	1	Connector, Male (Inlet)	
6	70027706	3	Gasket, Circular (O-Ring)	

FIGURE 9-11. PUMP ASSEMBLY - DRIVE

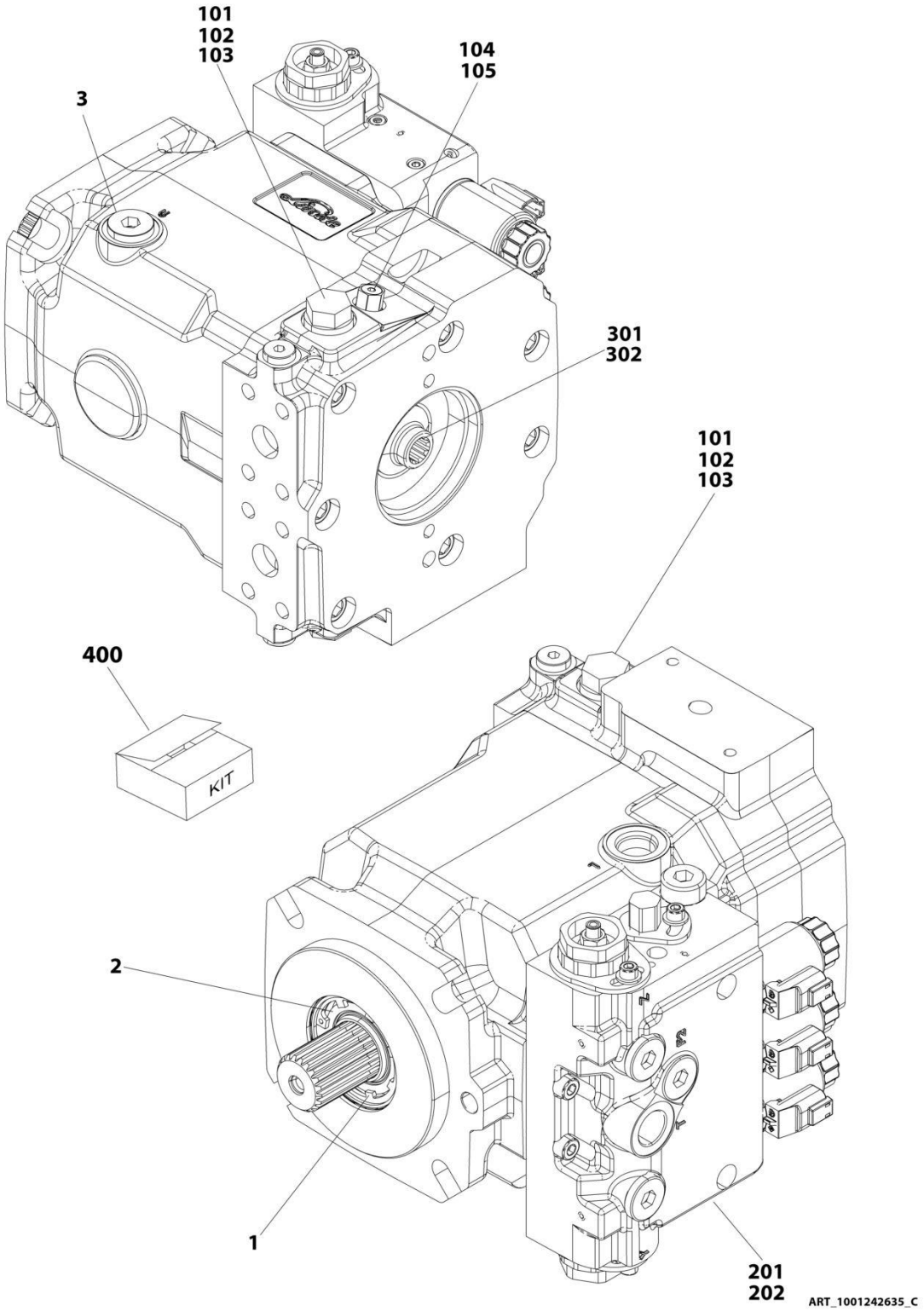

FIGURE 9-11. PUMP ASSEMBLY - DRIVE

ITEM	PART NUMBER	QTY	DESCRIPTION	REV
	1001242635	Ref	Drive Pump	C
		Ref	Power Unit and Housing	
1	70030064	1	Ring, Locking	
2	70030065	1	Seal, Shaft	
3	70030066	1	Plug	
		Ref	Port Plate Housing	
101	70030067	2	O-Ring	
102	70030068	2	O-Ring	
103	70030069	2	Valve, Relief	
104	70030070	1	O-Ring	
105	70030071	1	Valve, Relief	
		Ref	E2 Remote Control	
201	70030077	1	Control Assembly	
202	70030078	4	Screw M8 x 30	
		Ref	Cover and Coupling	
301	70030079	1	O-Ring	
302	70030080	1	Sleeve, Coupling	
400	70030082	1	Seal Kit	

FIGURE 9-12. PUMP ASSEMBLY - PISTON

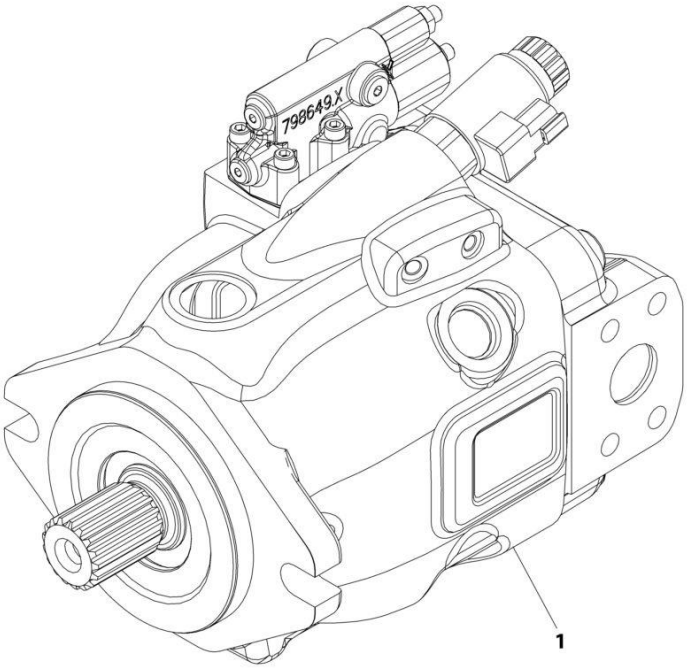

ART_1001203793-C

FIGURE 9-12. PUMP ASSEMBLY - PISTON

ITEM	PART NUMBER	QTY	DESCRIPTION	REV
	1001203793	Ref	Piston Pump Assembly	C
		Ref	Note: No Other Service Parts Available	
	70027595	1	Controller - DRS	
	70024186	1	Valve, EK Controller	
	70030305	1	Seal Kit (Includes Shaft Seal)	
	70030306	1	Seal, Shaft	

FIGURE 9-13. PUMP ASSEMBLY

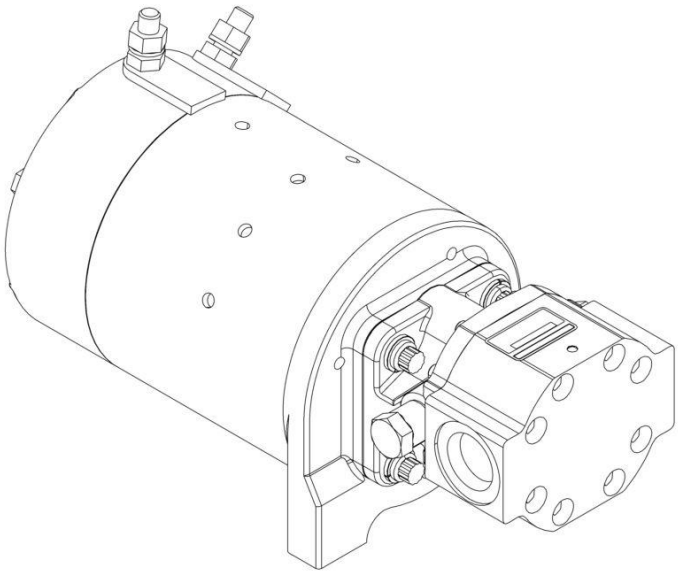

ART_1001271161

FIGURE 9-13. PUMP ASSEMBLY

ITEM	PART NUMBER	QTY	DESCRIPTION	REV
	1001271161	Ref	AUXILIARY POWER PUMP	A
	See Note	Ref	Note: No Service Parts Available at Time of Printing.	

FIGURE 9-14. VALVE ASSEMBLY - CHARGE FLOW CONTROL VALVE ASSEMBLY

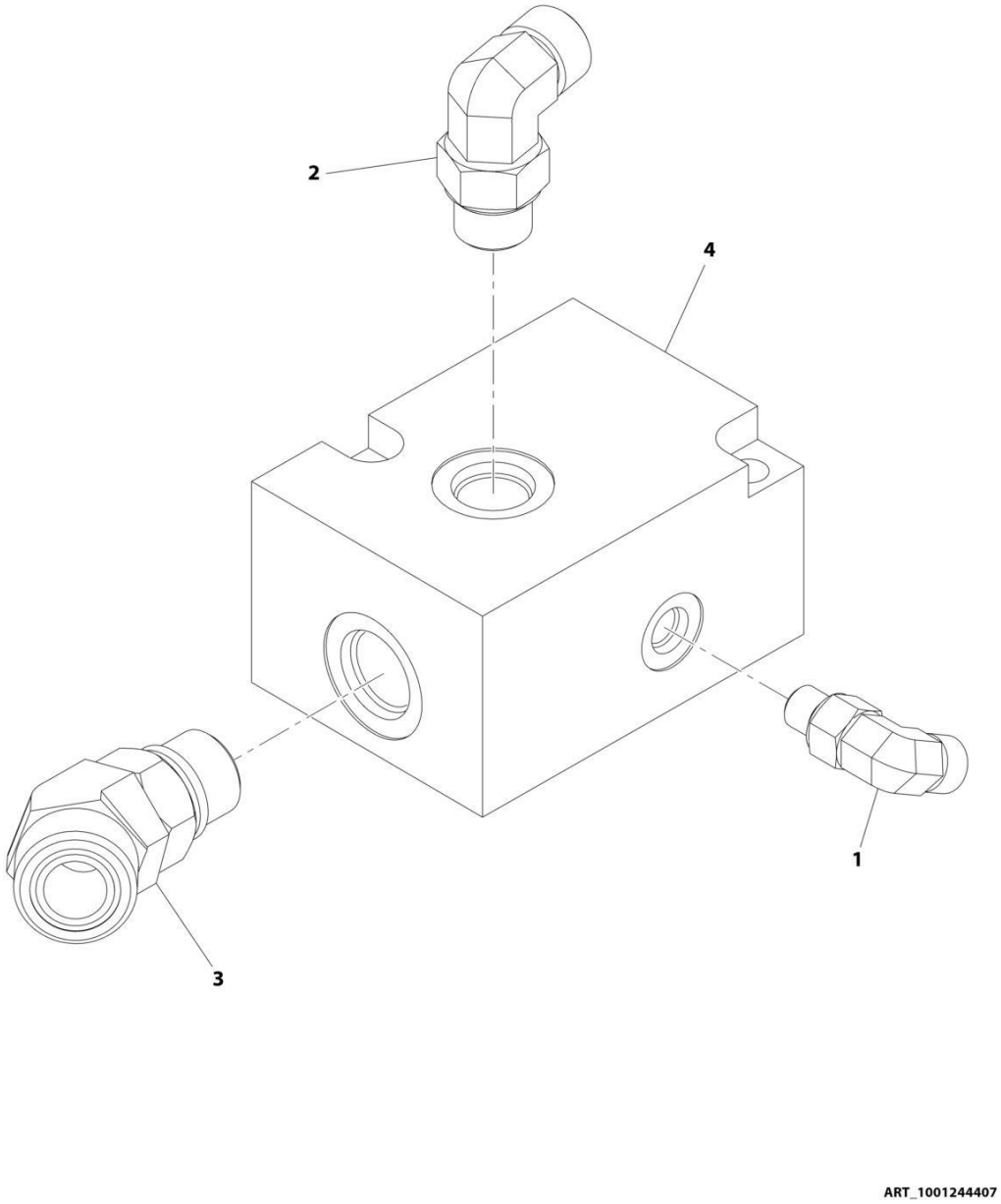

FIGURE 9-14. VALVE ASSEMBLY - CHARGE FLOW CONTROL VALVE ASSEMBLY

ITEM	PART NUMBER	QTY	DESCRIPTION	REV
	1001244407	Ref	Charge Flow Control Valve Assembly	B
1	2130404	1	Fitting, 90 ORFS	
2	2130808	1	Fitting, 90 ORFS	
3	2151210	1	Fitting, 45 ORFS	
4	1001244406	1	Valve, Change Flow Control	
4	7011367	1	Seal Kit	

FIGURE 9-15. VALVE ASSEMBLY - DIVERTOR VALVE

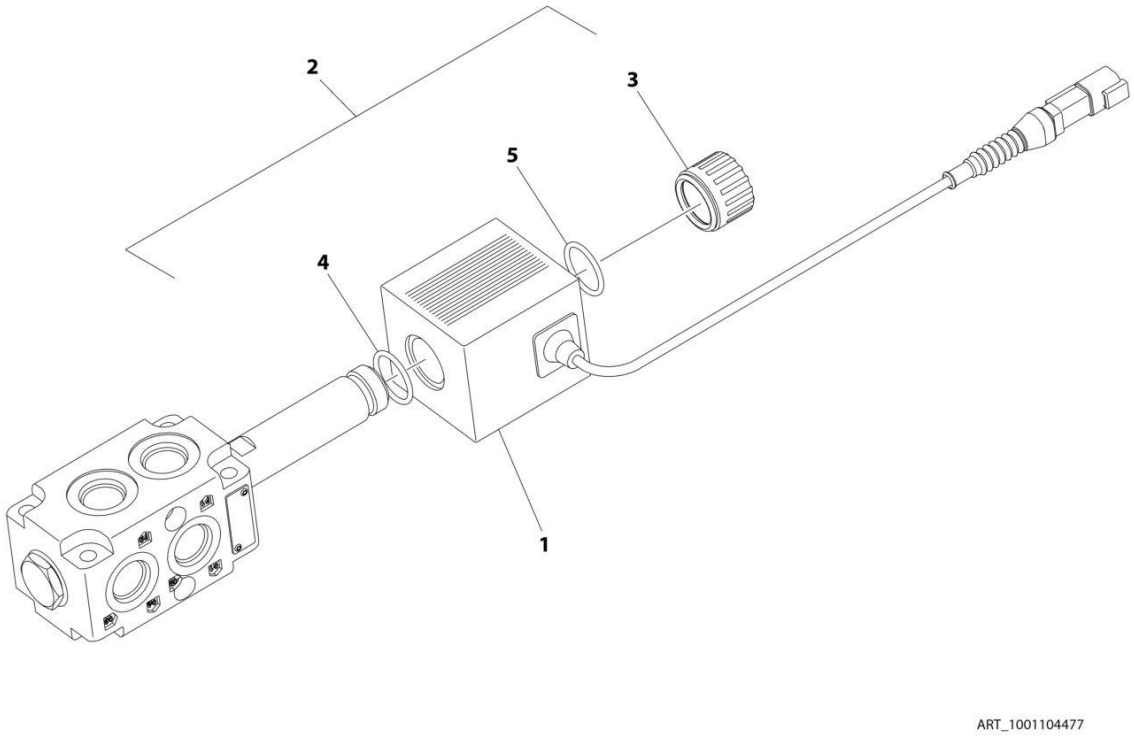

FIGURE 9-15. VALVE ASSEMBLY - DIVERTOR VALVE

ITEM	PART NUMBER	QTY	DESCRIPTION	REV
	1001104477	Ref	DIVERTOR VALVE	D
1	70020764	1	Coil	
2	70021531	1	Retainer Kit (Includes Items 3-5)	
3	Kit	1	Nut	
4	Kit	1	O-Ring	
5	Kit	1	O-Ring	

FIGURE 9-16. VALVE ASSEMBLY - LEVEL AND STABILIZATION VALVE

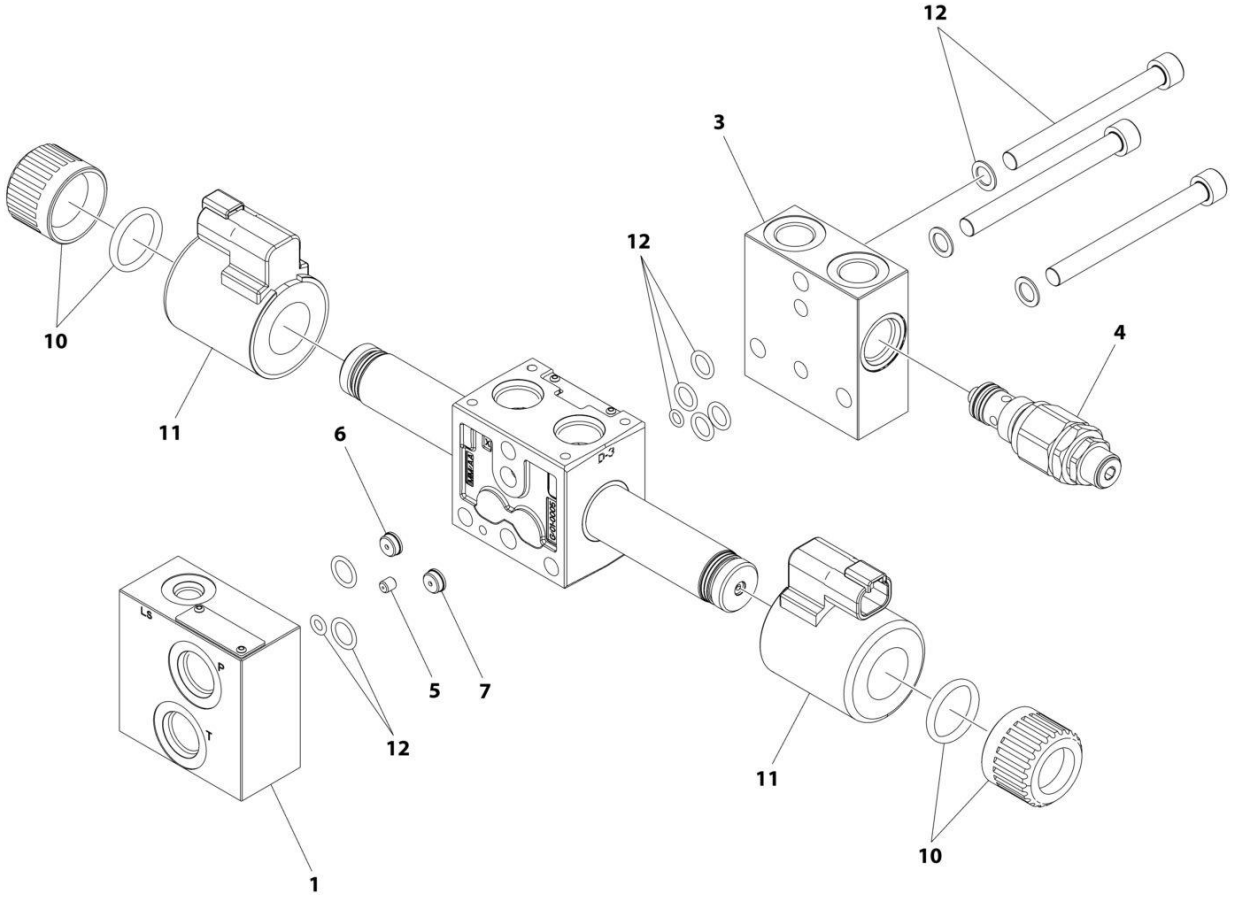

ART_1001270176

FIGURE 9-16. VALVE ASSEMBLY - LEVEL AND STABILIZATION VALVE

ITEM	PART NUMBER	QTY	DESCRIPTION	REV
	1001270176	Ref	PROPORTIONAL SWAY VALVE	B
1	70028414	1	Valve Section	
3	70028504	1	Plate	
4	70030321	1	Relief Valve Cartridge	
5	70028416	1	Nozzle	
6	70030322	1	Restrictor	
7	70028243	1	Restrictor	
10	70028502	2	Kit, Coil Nut	
	Kit	1	Nut	
	Kit	1	O-Ring	
11	70004595	2	Coil	
12	70028503	1	Kit, Bolt and Seal	
	Kit	2	O-Ring	
	Kit	2	O-Ring	
	Kit	4	O-Ring	
	Kit	3	Bolt	
	Kit	3	Washer	

FIGURE 9-17. VALVE ASSEMBLY - MAIN CONTROL VALVE

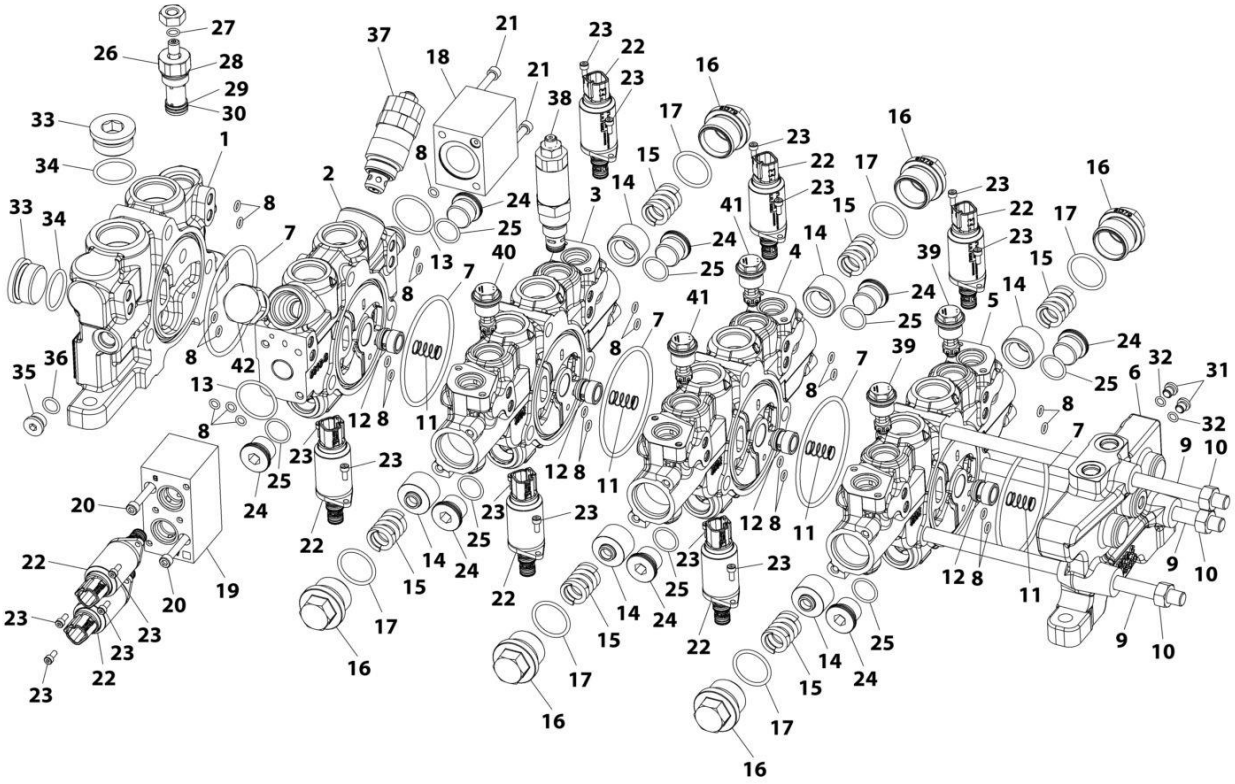

FIGURE 9-17. VALVE ASSEMBLY - MAIN CONTROL VALVE

ITEM	PART NUMBER	QTY	DESCRIPTION	REV
	1001258094	Ref	MAIN CONTROL VALVE	B
1	70028300	1	Inlet Section Assembly	
2	70030293	1	Lift Section Assembly	
3	70030241	1	Tilt Section Assembly	
4	70030242	1	Auxiliary Section Assembly	
5	70029872	1	Extend/Retract Section Assembly	
6	70022007	1	Outlet Section Assembly	
7	8034697	5	O-Ring	
8	70026369	24	O-Ring	
9	70028299	3	Tie Rod	
10	70022019	6	Nut	
11	70025854	4	Spring	
12	70028287	4	Poppet, CV	
13	70026784	2	O-Ring	
14	70026781	6	Spring Seat	
15	70026783	6	Spring	
16	70026778	6	Plug Assembly	
17	70026779	6	O-Ring	
18	70029873	1	End Cap	
19	70030243	1	End Cap Assembly, Solenoid	
20	70026785	2	Screw	
21	70026383	2	Screw	
22	70029874	8	Cartridge Valve, Solenoid	
23	70022014	16	Screw	
24	70024847	8	Plug Assembly	
25	70026777	8	O-Ring	
26	70028286	1	Drain Regulator Assembly	
27	70026373	1	O-Ring	
28	10837928	1	O-Ring	
29	70026376	1	Ring	
30	70026370	1	O-Ring	
31	70026379	2	Plug	
32	70026372	2	O-Ring	
33	70050473	2	Plug	
34	10732931	2	O-Ring	
35	70050475	1	Plug	
36	70024201	1	O-Ring	
37	70030244	1	Relief Valve Assembly	
38	70030245	1	Relief Valve Assembly	
39	70028296	2	Relief Valve Assembly	
40	70028297	1	Relief Valve Assembly	
41	70030246	2	Relief Valve Assembly	
42	10837953	1	Shut -Off Plug	

FIGURE 9-18. VALVE ASSEMBLY - PRIORITY VALVE

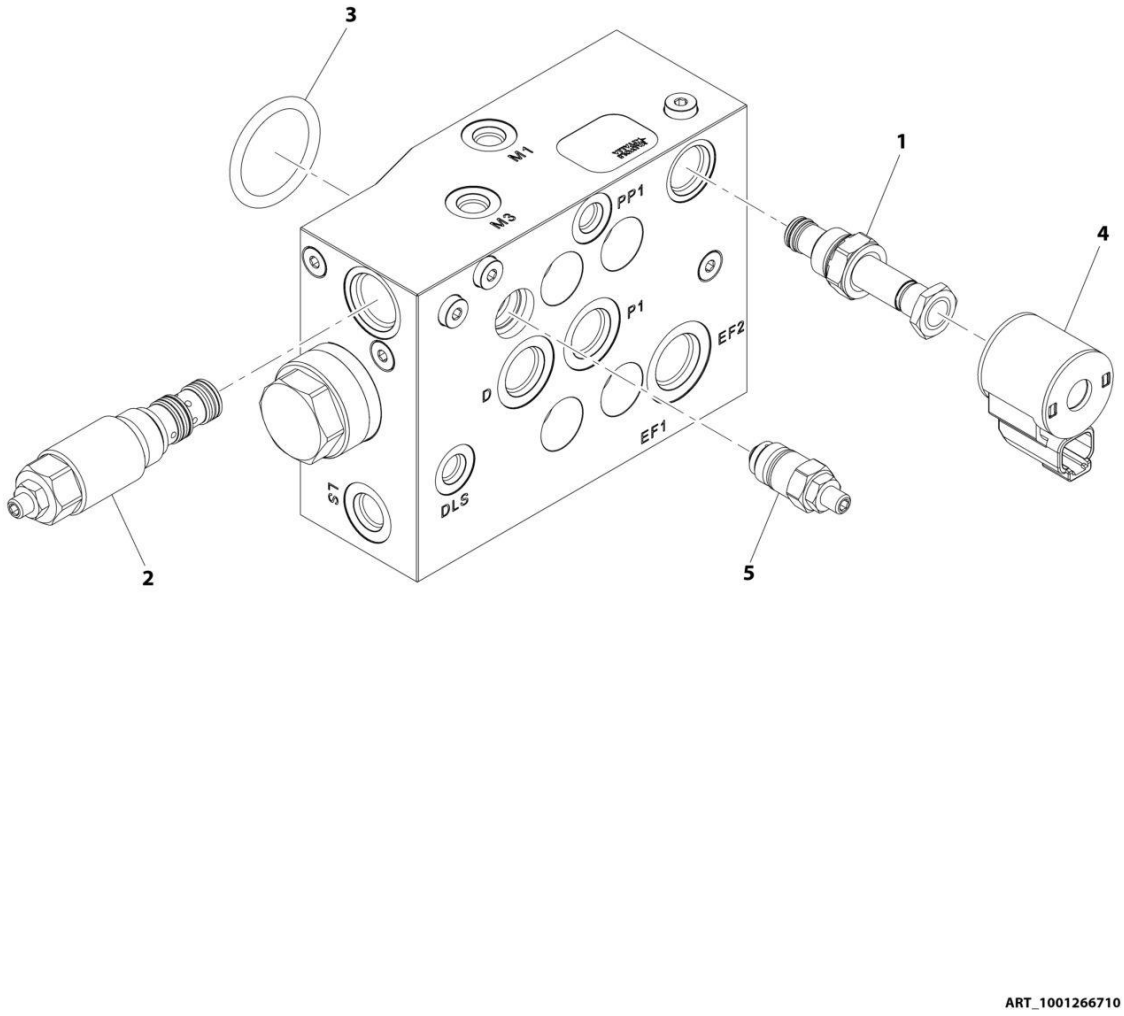

FIGURE 9-18. VALVE ASSEMBLY - PRIORITY VALVE

ITEM	PART NUMBER	QTY	DESCRIPTION	REV
	1001266710	Ref	Priority Valve	A
1	70029976	1	Cartridge	
2	70029977	1	Valve, Check	
3	70029978	1	O-Ring	
4	70002963	1	Coil	
5	70029979	1	Valve, Check	

FIGURE 9-19. VALVE ASSEMBLY - SAHR BRAKE VALVE

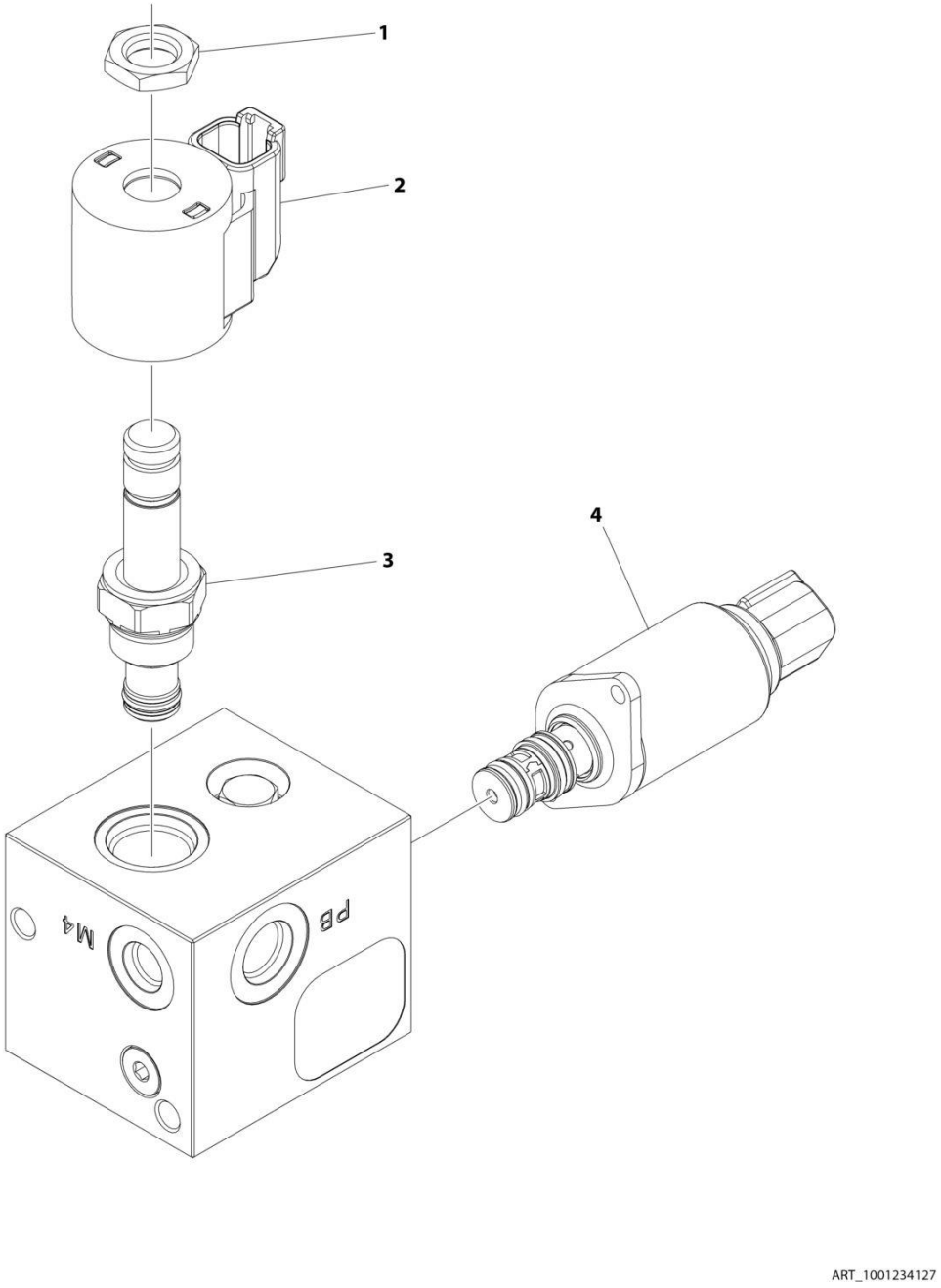

FIGURE 9-19. VALVE ASSEMBLY - SAHR BRAKE VALVE

ITEM	PART NUMBER	QTY	DESCRIPTION	REV
	1001234127	Ref	Sahr Brake Valve	C
1	7022390	1	Nut	
2	70002963	1	Coil	
3	70002955	1	Cartridge	
4	70030036	1	Solenoid Valve	

FIGURE 9-20. VALVE ASSEMBLY - DUAL AUXILIARY DIVERTOR VALVE

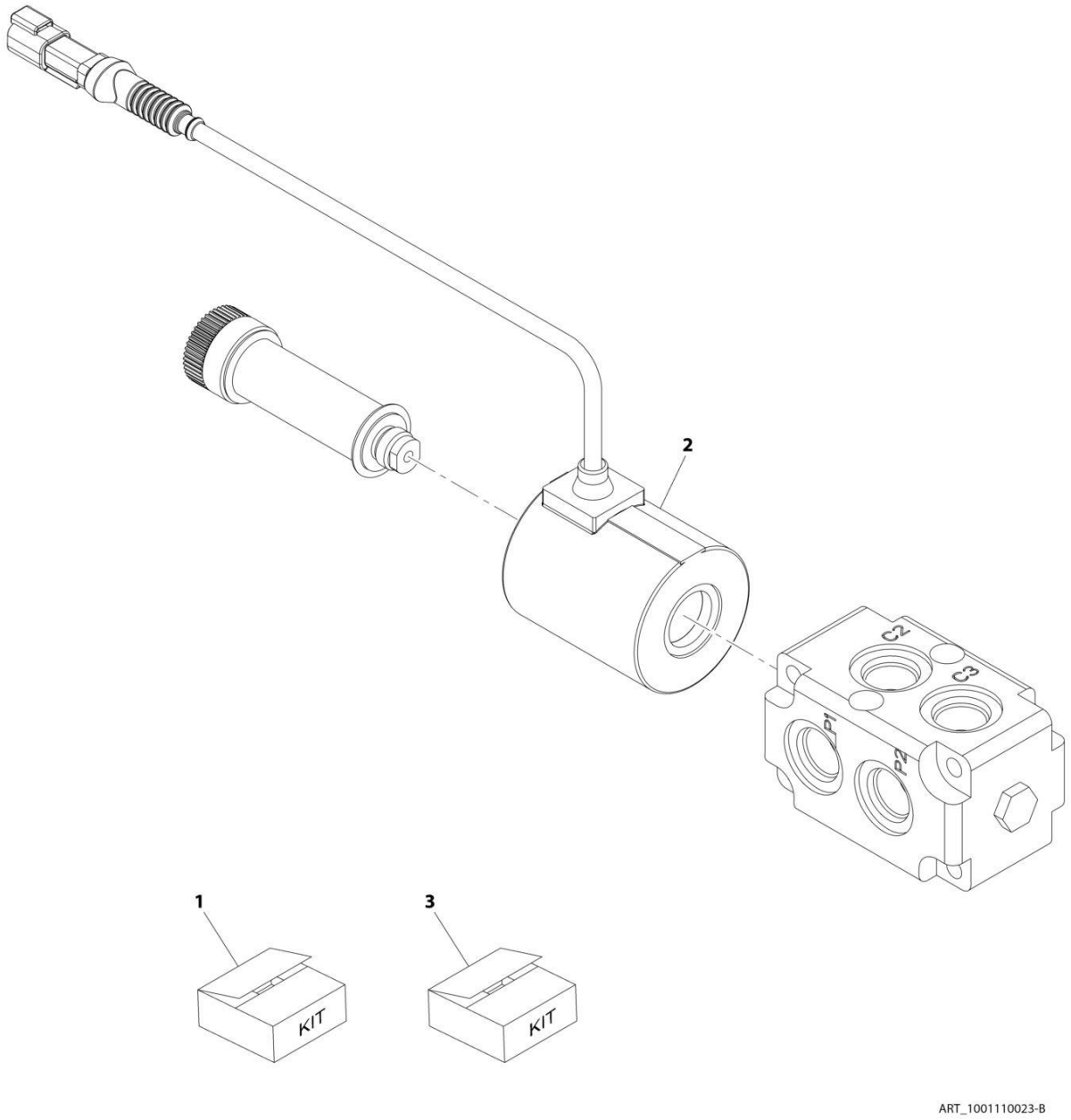

FIGURE 9-20. VALVE ASSEMBLY - DUAL AUXILIARY DIVERTOR VALVE

ITEM	PART NUMBER	QTY	DESCRIPTION	REV
	1001110023	Ref	Divertor Valve	B
1	70027596	1	Kit, Seal	
	Kit	2	O-Ring	
2	70020764	1	Coil	
3	70021531	1	Kit, Coil Nut	
	N.S.S.	1	O-Ring	
	N.S.S.	1	O-Ring	
	N.S.S.	1	Nut	

FIGURE 9-21. VALVE ASSEMBLY - STEERING SELECT VALVE

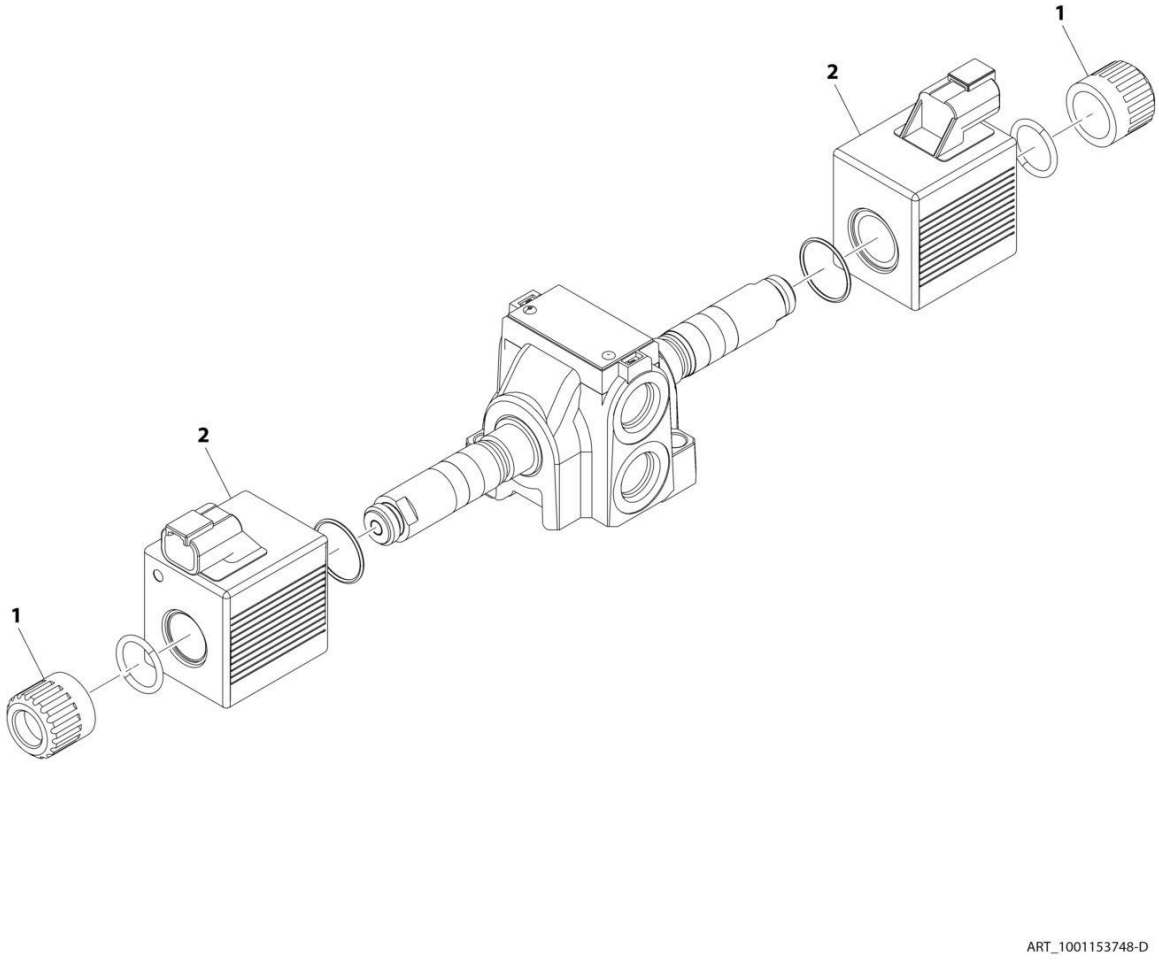

FIGURE 9-21. VALVE ASSEMBLY - STEERING SELECT VALVE

ITEM	PART NUMBER	QTY	DESCRIPTION	REV
	1001153748	Ref	Steering Select Valve	D
1	70020867	2	Nut, Coil	
2	70026582	2	Coil	

FIGURE 9-22. VALVE INSTALLATION - COUNTERBALANCE VALVE

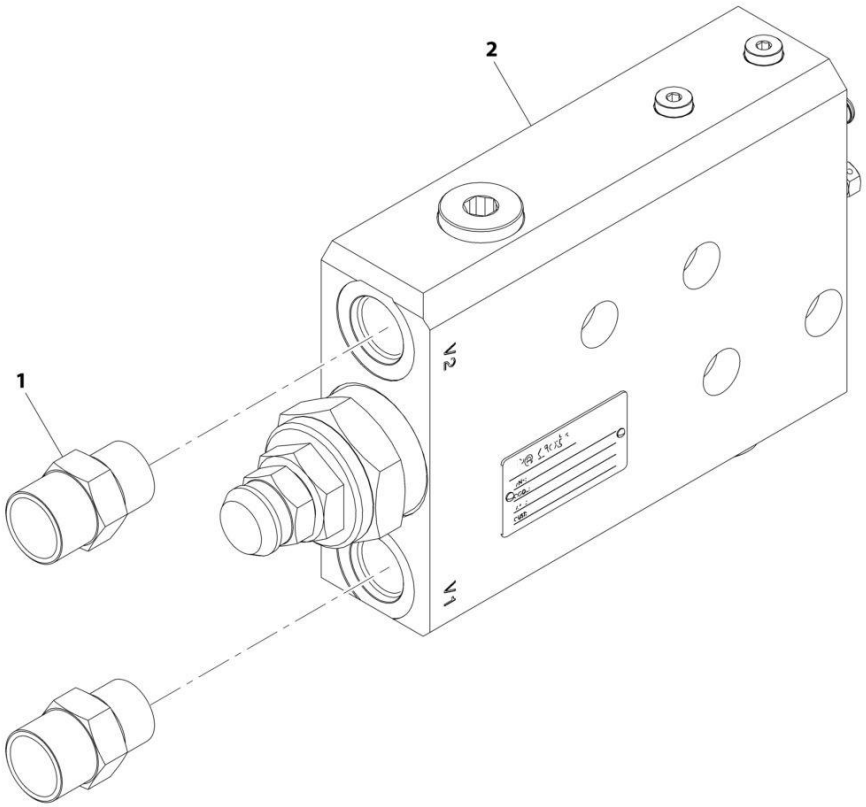

ART_1001212312-A

FIGURE 9-22. VALVE INSTALLATION - COUNTERBALANCE VALVE

ITEM	PART NUMBER	QTY	DESCRIPTION	REV
	1001212312	Ref	Counterbalance Valve & Fittings Sub-Assembly	A
1	2111010	2	Fitting, Straight ORFS	
2	1001209862	1	Valve, Counterbalance (See Separate Breakdown in this Section)	

FIGURE 9-23. VALVE ASSEMBLY - COUNTERBALANCE VALVE

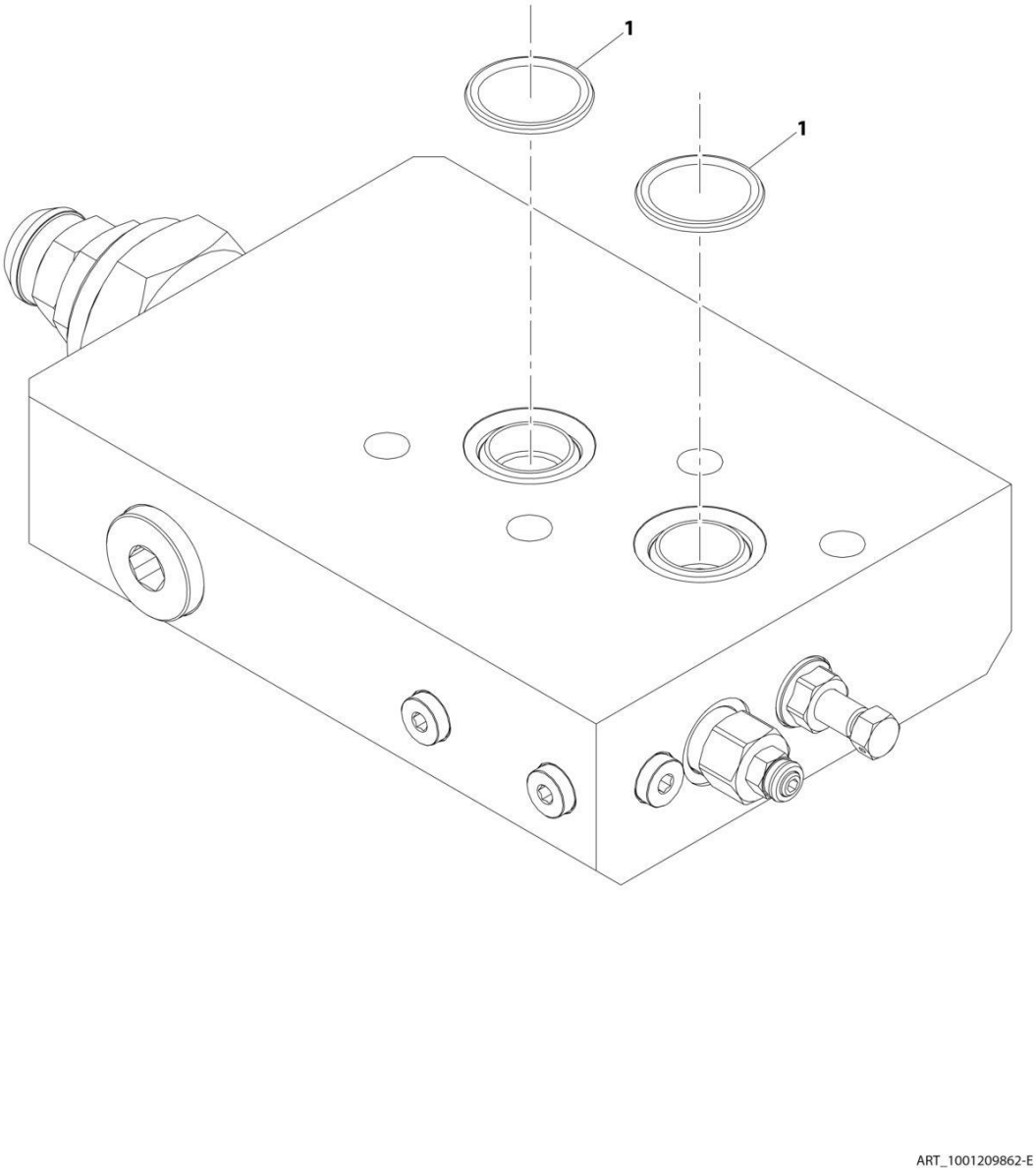

FIGURE 9-23. VALVE ASSEMBLY - COUNTERBALANCE VALVE

ITEM	PART NUMBER	QTY	DESCRIPTION	REV
	1001209862	Ref	Counterbalance Valve	E
1	70028422	2	O-Ring	

SECTION 10 - ELECTRICAL

FIGURE 10-1. 2733 ELECTRICAL LAYOUT

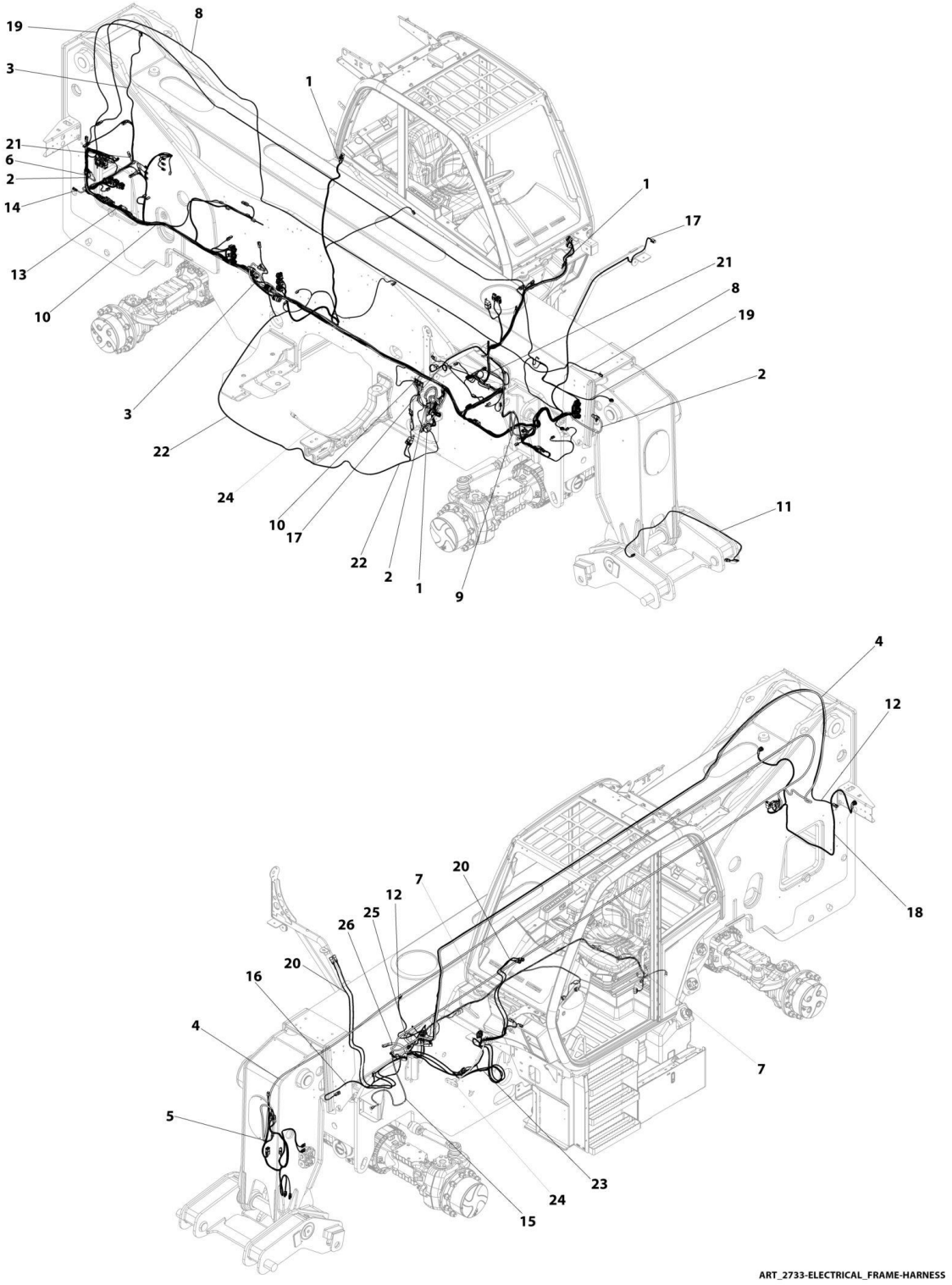

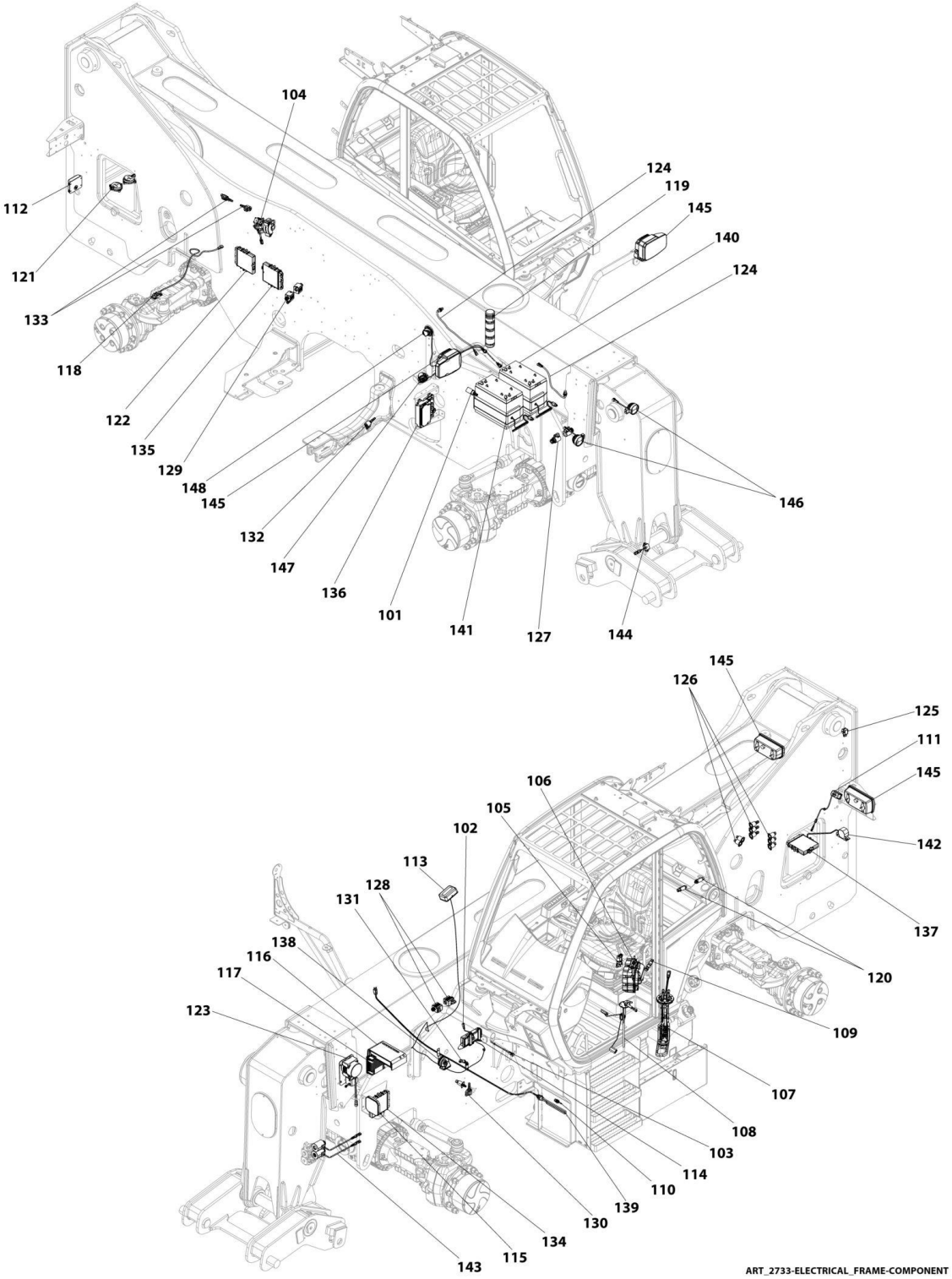
104
112
121
133
118
122
135
129
148
145
132
147
136
101
141
127
144
124
119
145
140
124
146
145
126
125
111
145
142
137
120
109
107
108
103
114
110
139
130
134
115
143
106
105
102
113
128
131
138
116
117
123
ART_2733-ELECTRICAL_FRAME-COMPONENT

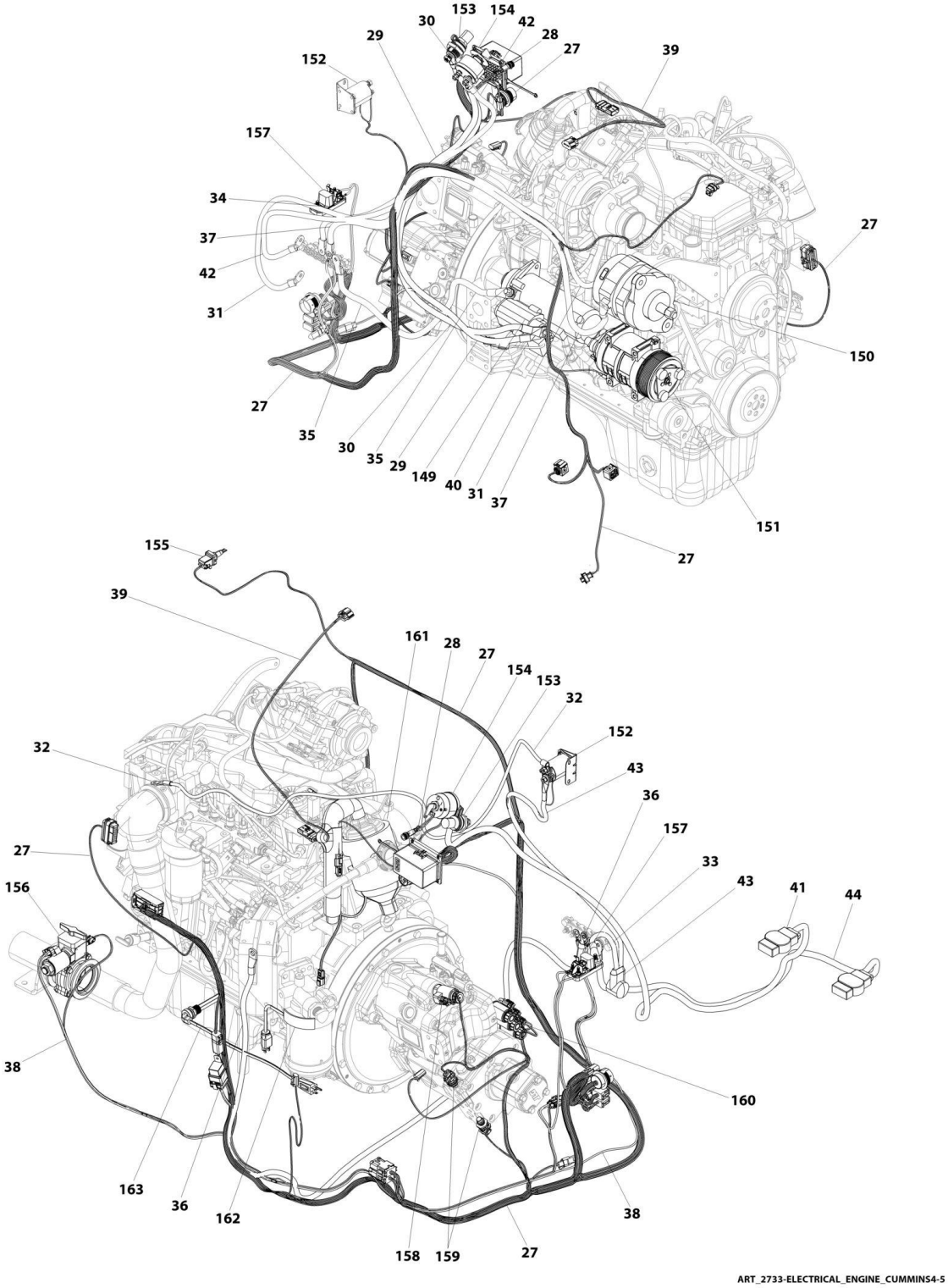
153
154
30
42
28
29
27
39
152
157
34
37
42
31
27
150
27
35
30
35
29
149
40
31
37
151
27
155
39
161
28
27
154
153
32
152
32
43
36
157
27
33
43
41
44
156
38
160
163
36
162
38
158
159
27
ART_2733-ELECTRICAL_ENGINE_CUMMINS4-5

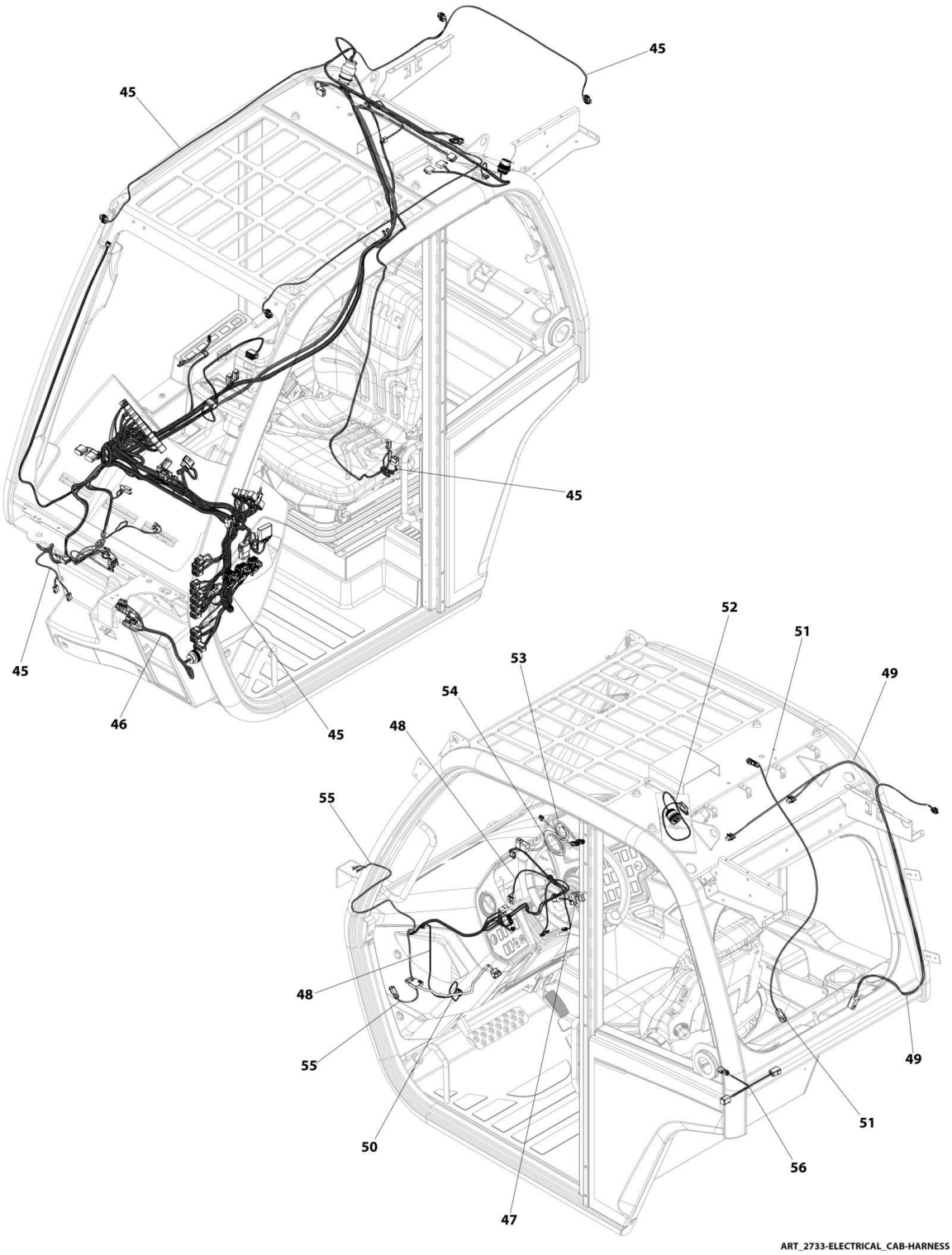
45
45
45
45
45
46
52
51
53
49
54
48
55
48
55
49
51
50
56
47
ART_2733-ELECTRICAL_CAB-HARNESS

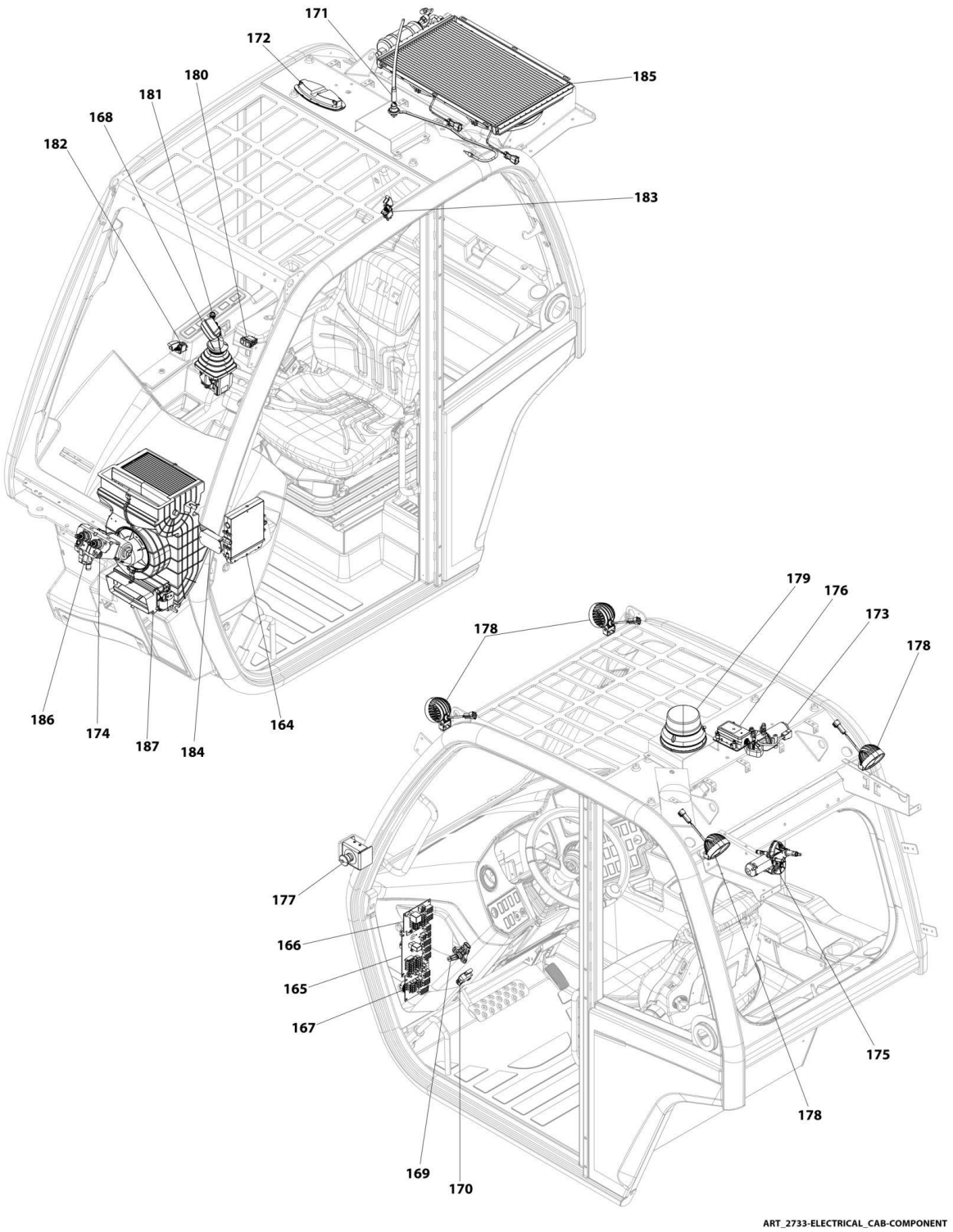
171
172
180
181
168
182
185
183
186
174
187
184
164
179
176
173
178
178
177
166
165
167
175
178
169
170
ART_2733-ELECTRICAL_CAB-COMPONENT

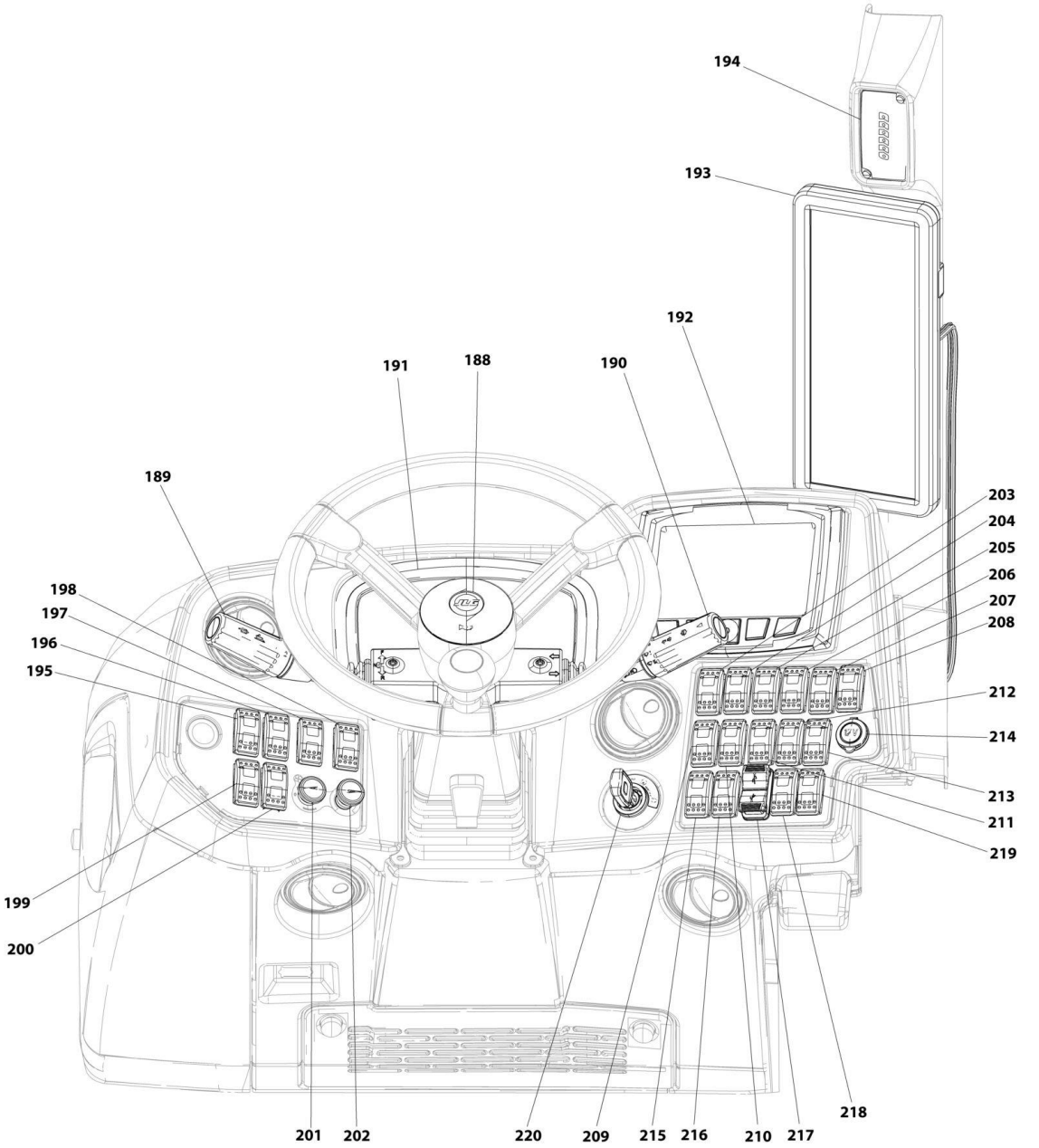

ART_2733-ELECTRICAL_CONTROLS

FIGURE 10-1. 2733 ELECTRICAL LAYOUT

ITEM	PART NUMBER	QTY	DESCRIPTION	REV
		Ref	Note: This figure is for identifying part location only.	
		Ref	HARNESS LIST	
1		Ref	Harness, Front Frame	
2		Ref	Harness, Front Frame Power	
3		Ref	Harness, Rear Frame	
4		Ref	Harness, Boom	
5		Ref	Harness, Platform	
6		Ref	Harness, Platform Ready	
7		Ref	Harness, Cummins Engine	
8		Ref	Harness, LMIS Boom	
9		Ref	Harness, LMIS Beacon Option	
10		Ref	Harness, LMIS Chassis Option	
11		Ref	Harness, Tilt Sensor Jumper	
12		Ref	Harness, Soft Stop	
13		Ref	Harness, Boom Ride/Float	
14		Ref	Harness, Reverse Sensor	
15		Ref	Cable, Attachment Recognition Antenna	
16		Ref	Harness, Attachment Recognition	
17		Ref	Harness, Headlights	
18		Ref	Harness, Tailights	
19		Ref	Harness, Boom Worklights	
20		Ref	Cable, Right Side Camera Extension	
21		Ref	Cable, Reverse Camera	
22		Ref	Harness, Reversing Fan	
23		Ref	Harness, Clearsky	
24		Ref	3-Way Plug	
25		Ref	Cable, Battery Jumper (+)	
26		Ref	Cable, Battery Jumper (-)	
27		Ref	Harness, Engine	
28		Ref	Harness, Def Purge Light	
29		Ref	Cable, Starter to Battery Disconnect	
30		Ref	Cable, Starter to Remote B+	
31		Ref	Cable, PDM to ALT+	
32		Ref	Cable, Grid Heater	
33		Ref	Cable, PDM to Power Fuse Module	
34		Ref	Cable, Ground Buss to Remote Ground	
35		Ref	Cable, Starter Ground	
36		Ref	Cable, Engine Ground	
37		Ref	Cable, Alt Ground	
38		Ref	Harness, ASOV	
39		Ref	Harness, TBAP	
40		Ref	Harness, Starter Solenoid Jumper	
41		Ref	Cable, Battery (+) to Disconnect	
42		Ref	Cable, Battery Disconnect to PDM	
43		Ref	Cable, PDM to Grid Heater	
44		Ref	Cable, Battery (-) to Buss	
45		Ref	Harness, Cab	
46		Ref	Harness, Cab Option	
47		Ref	Harness, Ignition Switch	
48		Ref	Harness, HVAC Actuator	

ITEM	PART NUMBER	QTY	DESCRIPTION	REV
49		Ref	Harness, A/C Option	
50		Ref	Cable, Communication Analyzer	
51		Ref	Harness, Telematics	
52		Ref	Harness, Telematics Ready	
53		Ref	Cable, Display Programming	
54		Ref	Cable, Display Video	
55		Ref	Harness, Emergency Stop	
56		Ref	Harness, Seat Adaptor	
		Ref	COMPONENT LIST	
101		Ref	Solenoids, Hydraulic Motor	
102		Ref	Switch, Gearbox Neutral Safety	
103		Ref	Sensor, Gearbox Speed	
104		Ref	Compressor, Reversing Fan	
105		Ref	Solenoids, Def Tank	
106		Ref	Pump, DEF Module	
107		Ref	Module, DEF Tank	
108		Ref	Sensor, Fuel Level	
109		Ref	Switch, Hydraulic Oil Pressure	
110		Ref	Sensor, Hydraulic Oil Temperature	
111		Ref	Camera, Reverse	
112		Ref	Sensor, Reverse	
113		Ref	Antennae, ClearSky Telematics	
114		Ref	Module, ClearSky Telematics CANBUS	
115		Ref	Antenna, Attachment Recognition	
116		Ref	Receiver, Attachment Recognition	
117		Ref	Module, Attachment Recognition Voltage Control	
118		Ref	Sensor, Rear Axle	
119		Ref	Light, LMIS Beacon	
120		Ref	Sensor, LMIS Pressure	
121		Ref	Sensor, Tilt	
122		Ref	Module, LMIS	
123		Ref	Sensor, Boom Length	
124		Ref	Sensor, Proximity	
125		Ref	Sensor, Boom Angle	
126		Ref	Solenoids, Main Control Valve	
127		Ref	Solenoids, Frame Sway Control Valve	
128		Ref	Solenoids, Speed Control Valve	
129		Ref	Solenoids, Steer Select Valve	
130		Ref	Solenoids, SAHR Valve	
131		Ref	Sensor, Brake Pressure	
132		Ref	Solenoids, Priority Valve	
133		Ref	Solenoids, Ride Control Valve	
134		Ref	Module, Front Frame	
135		Ref	Module, Transmission	
136		Ref	Box, Power Distribution Electrical	
137		Ref	Module, Rear Frame	
138		Ref	Horn	
139		Ref	Heater, Immersion	
140		Ref	Batteries	
141		Ref	Heater, Battery	
142		Ref	Alarm, Backup	

ITEM	PART NUMBER	QTY	DESCRIPTION	REV
143		Ref	Solenoids, Boom Quick Switch Valve	
144		Ref	Sensor, Tilt Dual Axis	
145		Ref	Road Lights	
146		Ref	Worklights	
147		Ref	Camera-Normal View	
148		Ref	Camera-Mirror View	
149		Ref	Starter	
150		Ref	Alternator	
151		Ref	Compressor, A/C	
152		Ref	Contactor	
153		Ref	Battery Jump Start Stud	
154		Ref	Master Electrical Switch	
155		Ref	Sensor, Coolant Level	
156		Ref	Air Shut Off Valve (ASOV)	
157		Ref	Fuse, Power Module	
158		Ref	Solenoid, Implement Pump	
159		Ref	Sensor, Hydrostatic Pump Pressure Transducer	
160		Ref	Solenoids, Hydrodstatic Pump	
161		Ref	Breather Tube Heater	
162		Ref	Fuel Filter Heater Pad	
163		Ref	Heater, Engine Block	
164		Ref	Module, Cab	
165		Ref	Electrical Board, Standard	
166		Ref	Electrical Board, Option 1	
167		Ref	Electrical Board, Option 2	
168		Ref	Joystick	
169		Ref	Sensor, Brake	
170		Ref	Switch, Brake Light	
171		Ref	Antenna, Radio	
172		Ref	Lamp, Dome	
173		Ref	Motor, Roof Wiper	
174		Ref	Motor, Front Wiper	
175		Ref	Motor, Rear Wiper	
176		Ref	Module, ClearSky Telematics 3-Wire	
177		Ref	Switch, Power/Emergency Stop	
178		Ref	Cab Worklights	
179		Ref	Beacon	
180		Ref	Switch, Frame Level	
181		Ref	Lamp, Air Shutoff Valve Indicator	
182		Ref	Switch, Air Shutoff Valve Emergency Stop	
183		Ref	Switch, Air Shutoff Valve Test	
184		Ref	HVAC Actuator	
185		Ref	Assembly, Cab Condenser	
186		Ref	Valve, HVAC	
187		Ref	Assembly, Heater & A/C	
188		Ref	Horn	
189		Ref	Lever, Transmission Control	
190		Ref	Lever, Accessory Control	
191		Ref	Instrument Panel	
192		Ref	Multifunction Display	
193		Ref	Display, Camera	

ITEM	PART NUMBER	QTY	DESCRIPTION	REV
194		Ref	Display, LSI	
195		Ref	Switch, Park Brake	
196		Ref	Switch, Continuous Auxiliary Hydraulic	
197		Ref	Switch, Air Conditioning	
198		Ref	Switch, HVAC Recirculation	
199		Ref	Switch, LSI Override	
200		Ref	Switch, Coupler	
201		Ref	HVAC Fan Speed	
202		Ref	Switch, HVAC Temperature Control	
203		Ref	Switch, Fog Lights	
204		Ref	Switch, Front Work Lights	
205		Ref	Switch, Boom Work Lights	
206		Ref	Switch, Rear Work Lights	
207		Ref	Switch, Beacon Light	
208		Ref	Switch, Hazard Lights	
209		Ref	Switch, Rear Wiper	
210		Ref	Switch, Roof Wiper	
211		Ref	Switch, Auxiliary Electric	
212		Ref	Switch, Boom Ride Control	
213		Ref	Switch, Auxiliary Decompression	
214		Ref	Power Outlet	
215		Ref	Switch, Steer Select	
216		Ref	Switch, Joystick/Steer Override	
217		Ref	USB Port	
218		Ref	Switch, Reversing Fan	
219		Ref	Switch, Master Light and Road Lights	
220		Ref	Switch, Ignition	

FIGURE 10-2. ALARM INSTALLATION - BACKUP

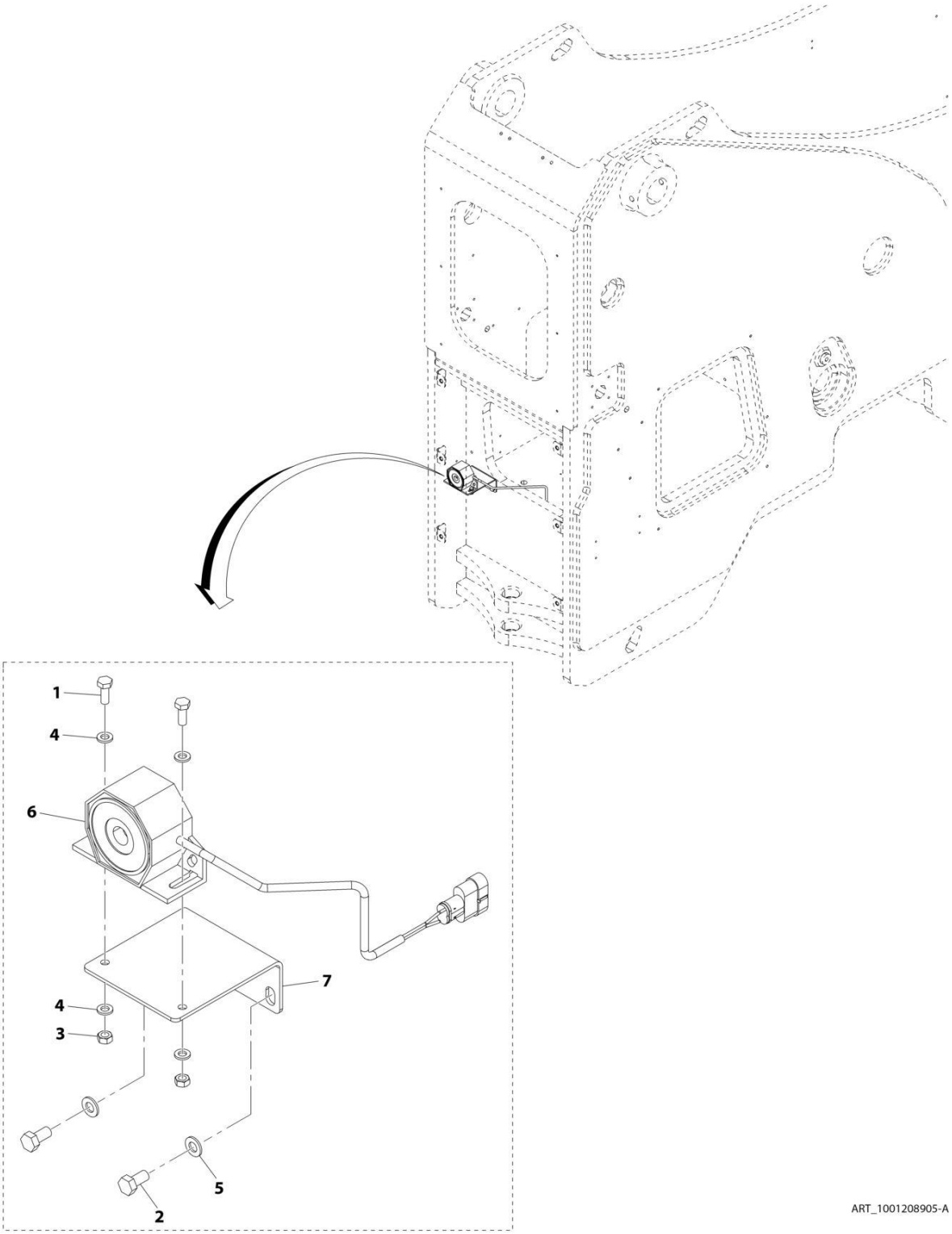

FIGURE 10-2. ALARM INSTALLATION - BACKUP

ITEM	PART NUMBER	QTY	DESCRIPTION	REV
	1001208905	Ref	Backup Alarm Installation	A
1	0760608	2	Bolt M6X16	
2	0760808	2	Bolt M8X16	
3	3290601	2	Nut M6	
4	4811700	4	Washer M6	
5	4811900	2	Washer M8	
6	1001101808	1	Alarm, Backup	
7	1001208904	1	Bracket	

FIGURE 10-3. ALARM INSTALLATION - BACKUP (WHITE NOISE)

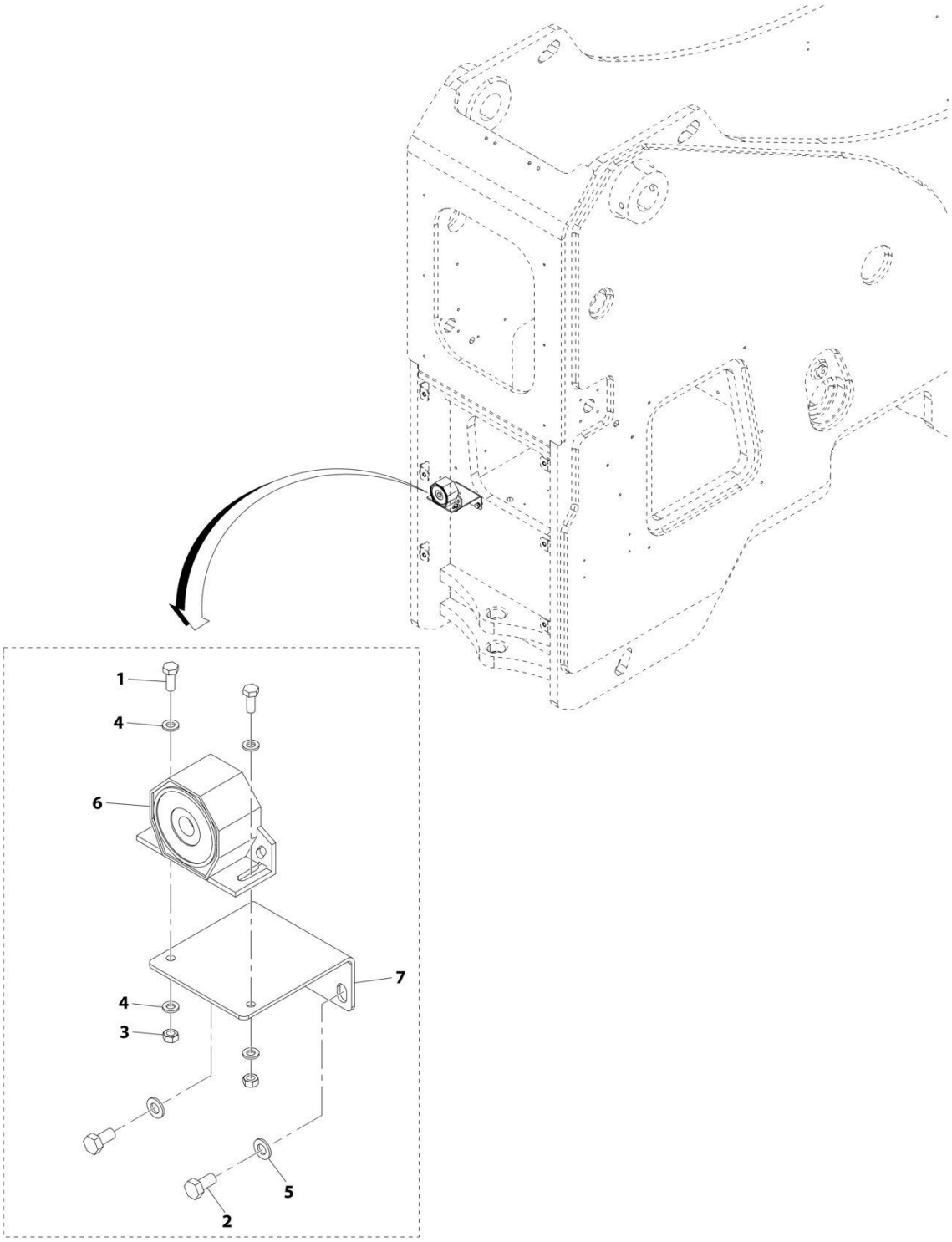

FIGURE 10-3. ALARM INSTALLATION - BACKUP (WHITE NOISE)

ITEM	PART NUMBER	QTY	DESCRIPTION	REV
	1001250124	Ref	Backup Alarm Installation (White Noise)	A
1	0760608	2	Bolt M6X16	
2	0760808	2	Bolt M8X16	
3	3290601	2	Nut M6	
4	4811700	4	Washer M6	
5	4811900	2	Washer M8	
6	1001165827	1	Alarm, Backup (White Noise)	
7	1001208904	1	Bracket	

FIGURE 10-4. ASOV HARNESS

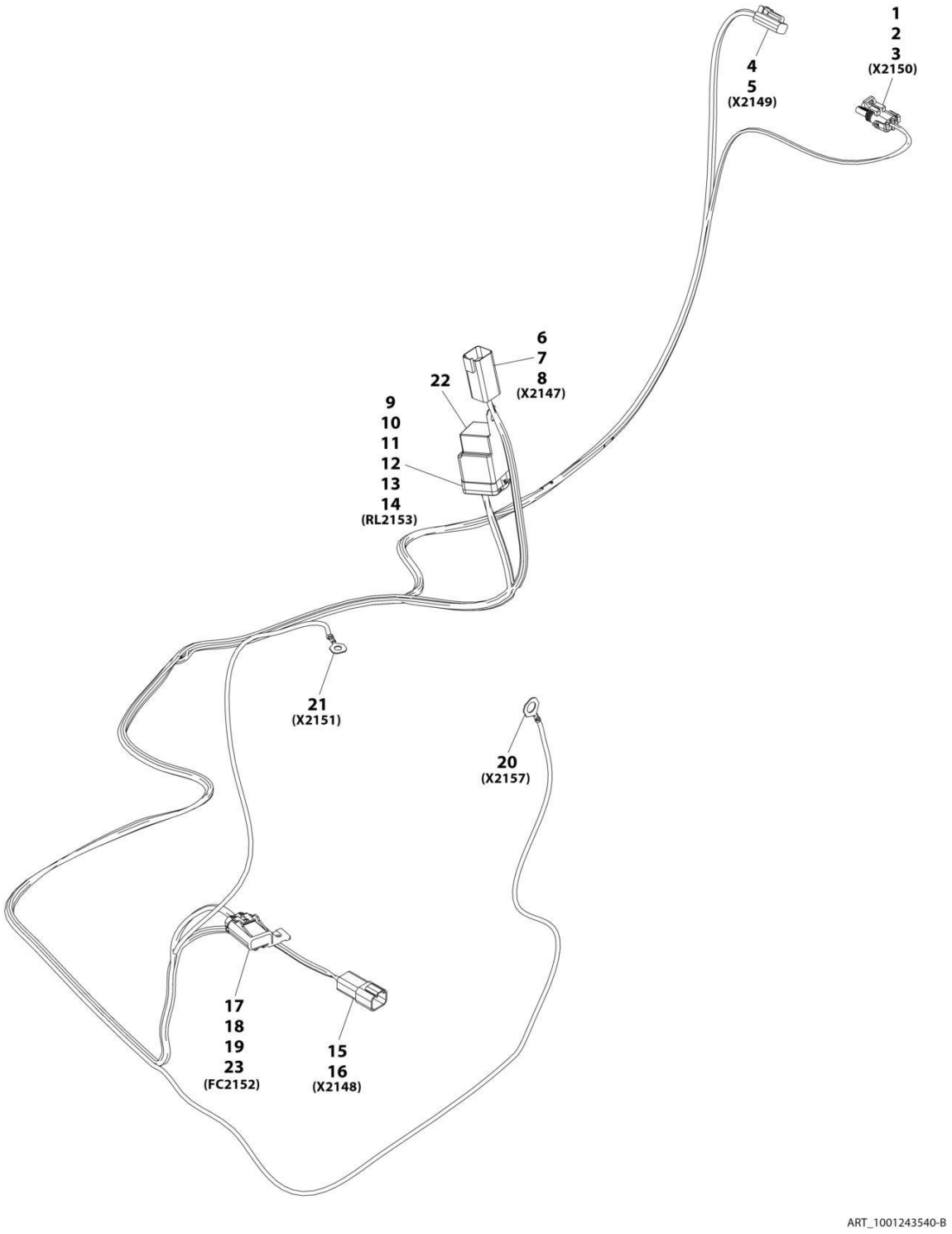

FIGURE 10-4. ASOV HARNESS

ITEM	PART NUMBER	QTY	DESCRIPTION	REV
	1001243540	Ref	ASOV Harness	B
1	4460742	1	Connector	
2	4460475	2	Terminal	
3	4460458	2	Seal	
4	4460891	1	Connector	
5	1001157890	2	Terminal	
6	4460899	1	Connector	
7	4460464	5	Terminal	
8	4460466	1	Plug	
9	1001231398	1	Connector	
10	1001231401	2	Terminal	
11	1001231400	2	Terminal	
12	1001231406	1	Plug	
13	1001231402	2	Seal	
14	1001231404	2	Seal	
15	4460932	1	Connector	
16	4460464	4	Terminal	
17	1001231397	1	Connector	
18	1001231401	2	Terminal	
19	1001231402	2	Seal	
20	1001187078	1	Ring Terminal	
21	1001207171	1	Ring Terminal	
22	3740080	1	Relay, Weather Proof	
23	8229235	1	Fuse	

FIGURE 10-5. ATTACHMENT RECOGNITION INSTALLATION (2733)

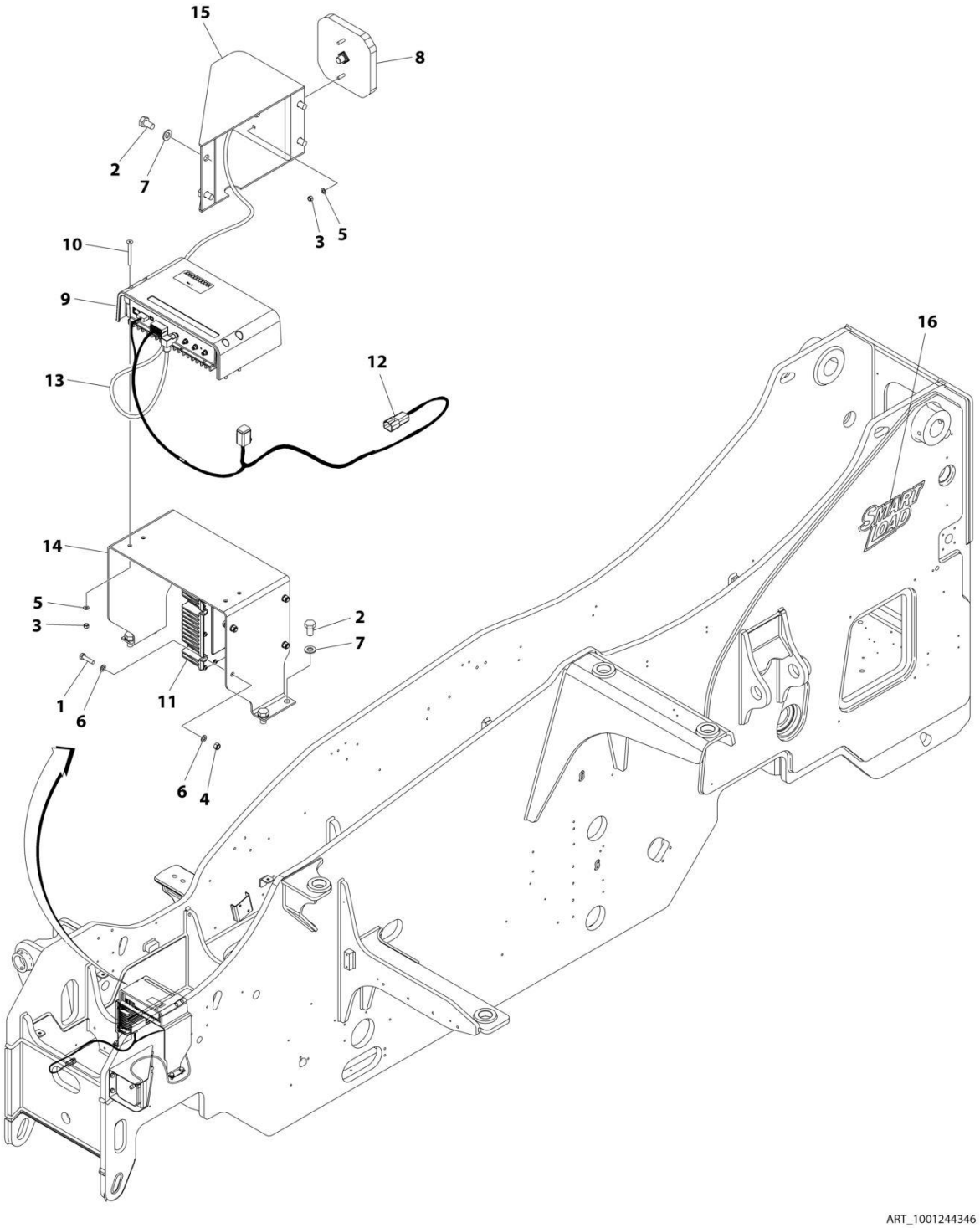

FIGURE 10-5. ATTACHMENT RECOGNITION INSTALLATION (2733)

ITEM	PART NUMBER	QTY	DESCRIPTION	REV
	1001244346	Ref	ATTACHMENT RECOGNITION INSTALLATION	C
1	0760612	4	Bolt M6 x 25	
2	0761009	8	Bolt	
3	3290505	6	Nut M5	
4	3290605	4	Nut M6	
5	4811600	6	Washer M5	
6	4811700	8	Washer M6	
7	4812000	8	Washer M10	
8	1001202730	1	Antenna, Attachment Recognition	
9	1001250475	1	Receiver, Attachment Recognition	
10	1001234395	4	Screw M5 x 50	
11	1001249078	1	Module, Attachment Recognition	
12	1001250203	1	Harness, Attachment Recognition (See Separate Breakdown in this Section)	
13	1001251142	1	Cable	
14	1001256899	1	Bracket	
15	1001256900	1	Bracket	
16	1001250276	2	Decal, Smart Load	

FIGURE 10-6. ATTACHMENT RECOGNITION (12010)

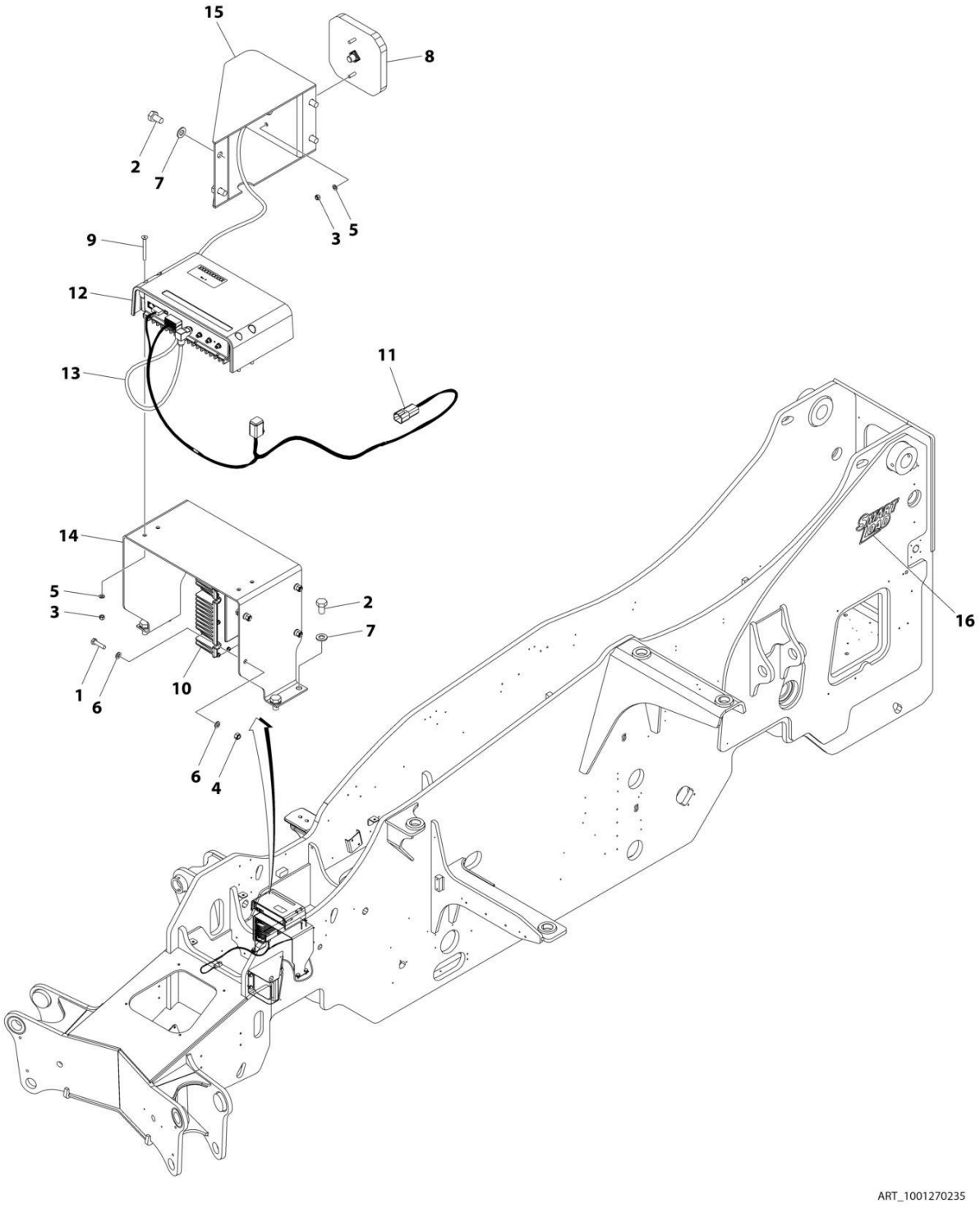

FIGURE 10-6. ATTACHMENT RECOGNITION (12010)

ITEM	PART NUMBER	QTY	DESCRIPTION	REV
	1001270235	Ref	ATTACHMENT RECOGNITION INSTALLATION	C
1	0760612	4	Bolt M6 x 25	
2	0761009	8	Bolt	
3	3290505	6	Nut M5	
4	3290605	4	Nut M6	
5	4811600	6	Washer M5	
6	4811700	8	Washer M6	
7	4812000	8	Washer M10	
8	1001237738	1	Antenna, Attachment Recognition	
9	1001234395	4	Screw M5 x 50	
10	1001249078	1	Module, Attachment Recognition	
11	1001250203	1	Harness, Attachment Recognition (See Separate Breakdown in this Section)	
12	1001250476	1	Receiver, Attachment Recognition	
13	1001251142	1	Cable	
14	1001256899	1	Bracket	
15	1001256900	1	Bracket	
16	1001250276	2	Decal, Smart Load	

FIGURE 10-7. ATTACHMENT RECOGNITION HARNESS

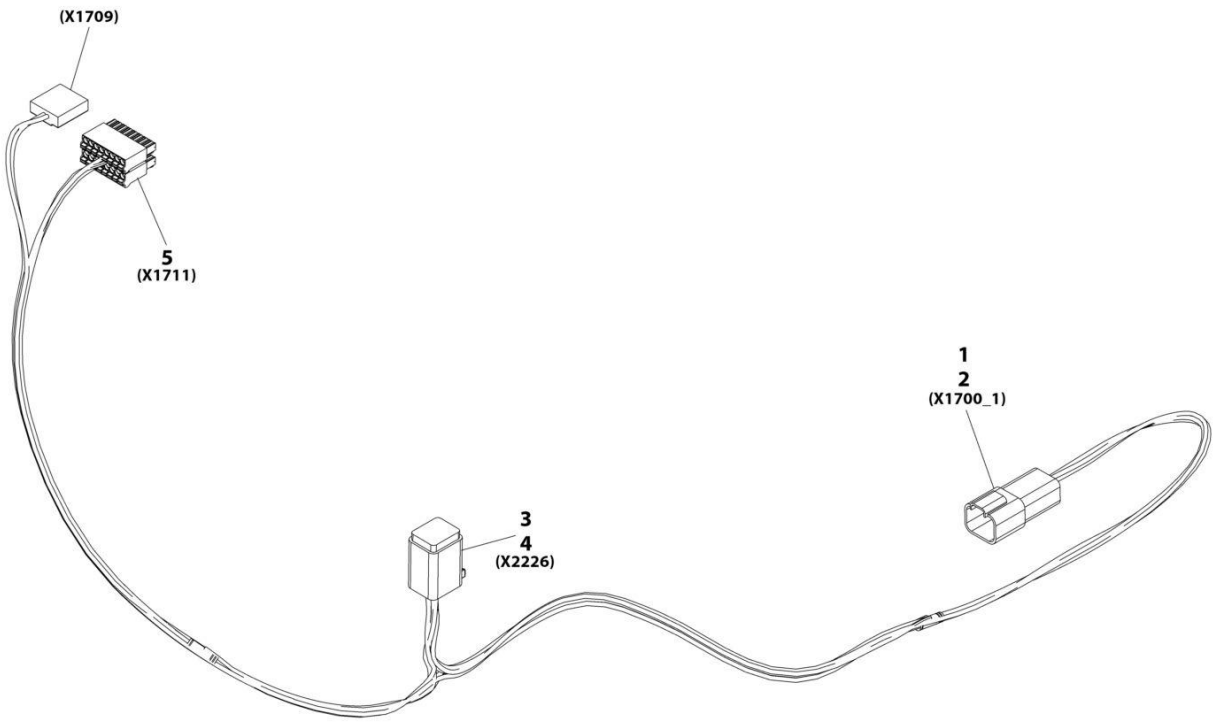

ART_1001250203-B

FIGURE 10-7. ATTACHMENT RECOGNITION HARNESS

ITEM	PART NUMBER	QTY	DESCRIPTION	REV
	1001250203	Ref	Attachment Recognition Harness	B
1	4460932	1	Connector	
2	4460464	4	Terminal	
3	4460894	1	Connector	
4	4460465	6	Terminal	
5	1001206837	1	Connector	

FIGURE 10-8. BATTERY INSTALLATION - DUAL

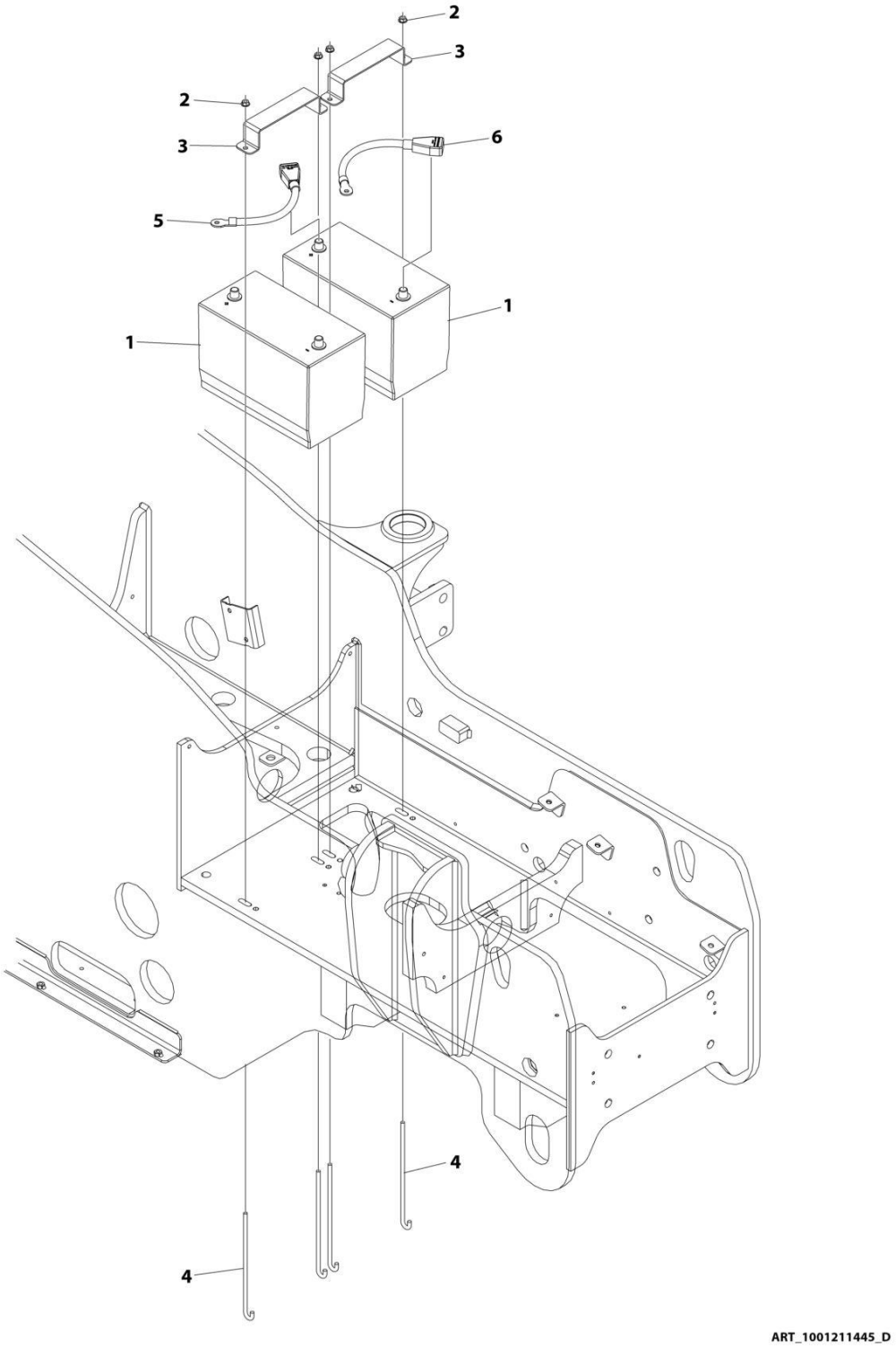

FIGURE 10-8. BATTERY INSTALLATION - DUAL

ITEM	PART NUMBER	QTY	DESCRIPTION	REV
	1001211445	Ref	Dual Battery Installation	D
1	0400075	2	Battery, 12V	
2	5220800	4	Nut Ripp M8	
3	1001160927	2	Plate	
4	1001160928	4	J-Bolt (270mm Length)	
4	1001181961	4	J-Bolt (220mm Length)	
5	1001203557	1	Cable, Positive Battery	
6	1001203558	1	Cable, Negative Battery	

FIGURE 10-9. BATTERY INSTALLATION - DUAL (WITH BREATHER TUBE HEATER)

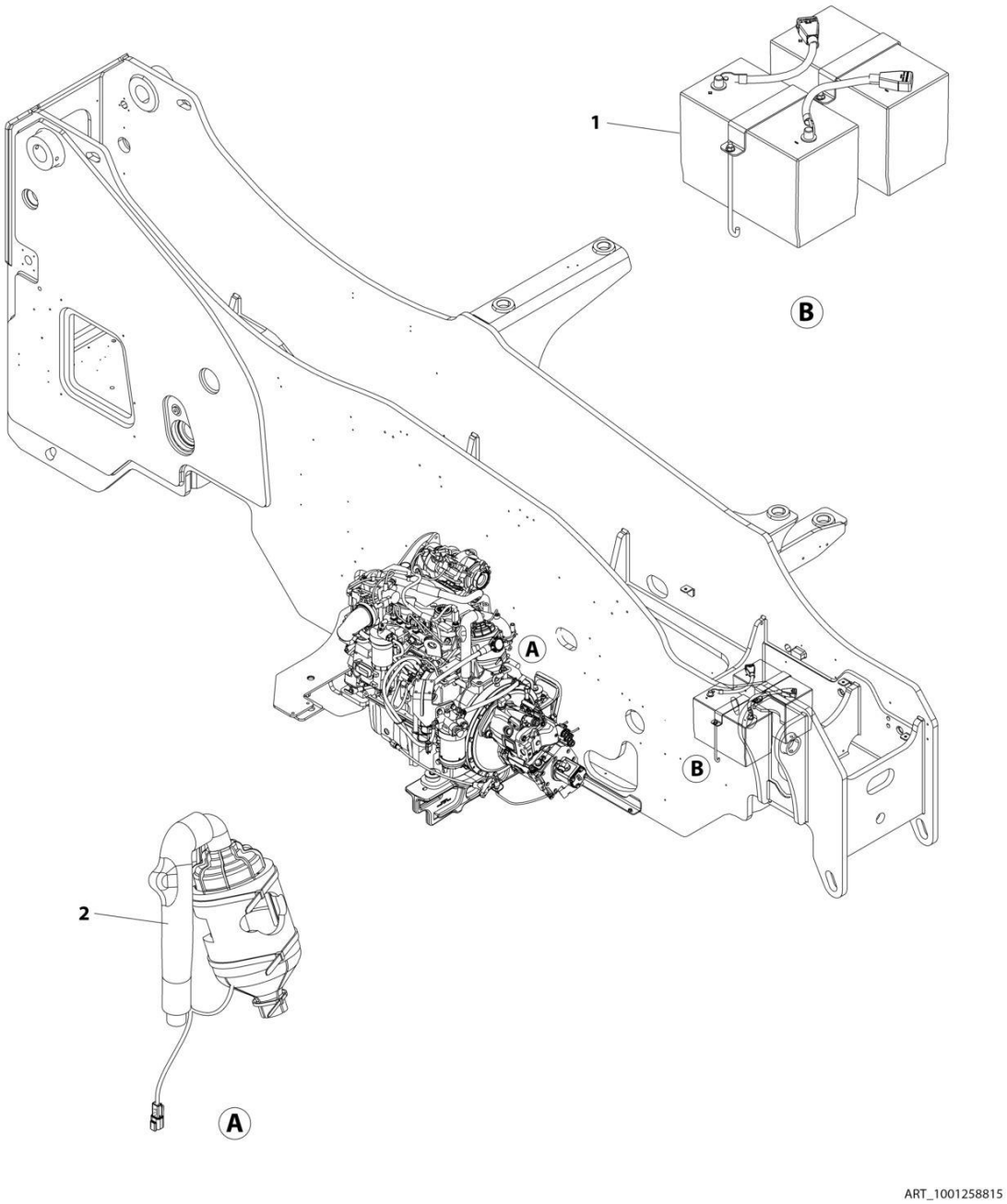

FIGURE 10-9. BATTERY INSTALLATION - DUAL (WITH BREATHER TUBE HEATER)

ITEM	PART NUMBER	QTY	DESCRIPTION	REV
	1001258815	Ref	BATTERY INSTALLATION - DUAL (WITH BREATHER TUBE HEATER)	A
1	1001211445	Ref	Dual Battery Installation (See Separate Breakdown in this Section)	
2	1001246882	Ref	Breather Tube Heater Installation (See Separate Breakdown in ENGINE AND ATTACHING PARTS Section)	

FIGURE 10-10. BATTERIES INSTALLATION - ARCTIC (115V)

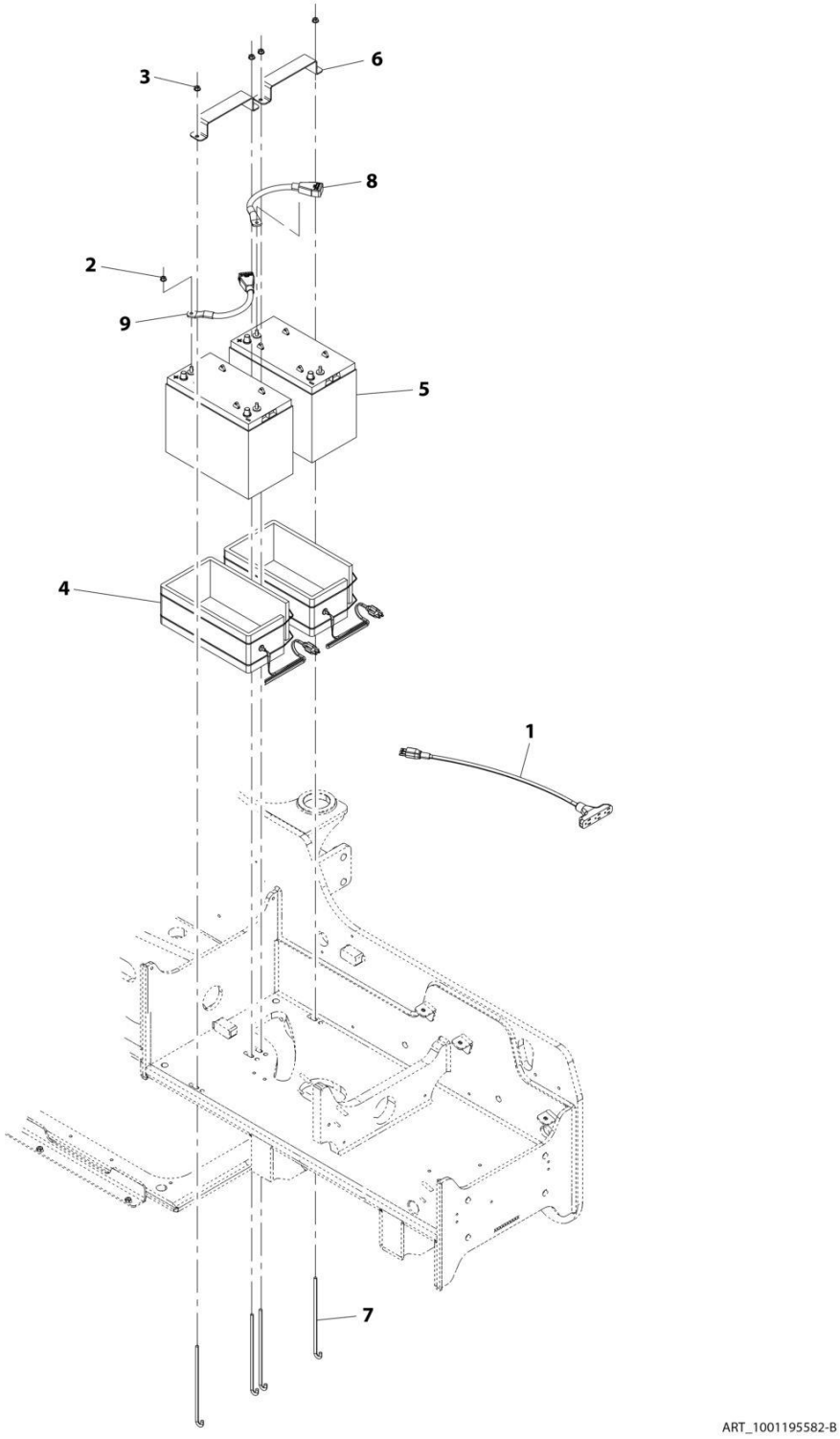

FIGURE 10-10. BATTERIES INSTALLATION - ARCTIC (115V)

ITEM	PART NUMBER	QTY	DESCRIPTION	REV
	1001195582	Ref	Arctic Batteries Installation (115V)	B
1	1060626	1	Cord, 3-Way Extension	
2	3311508	2	Nut 5/16	
3	5220800	4	Nut M8	
4	1001093564	2	Heater, Battery	
5	1001098762	2	Battery 12V	
6	1001160927	2	Plate, Battery Hold Down	
7	1001160928	4	J-Bolt	
8	1001172495	1	Cable, Positive Battery	
9	1001172496	1	Cable, Negative Battery	

FIGURE 10-11. BOOM TO FRAME HARNESS

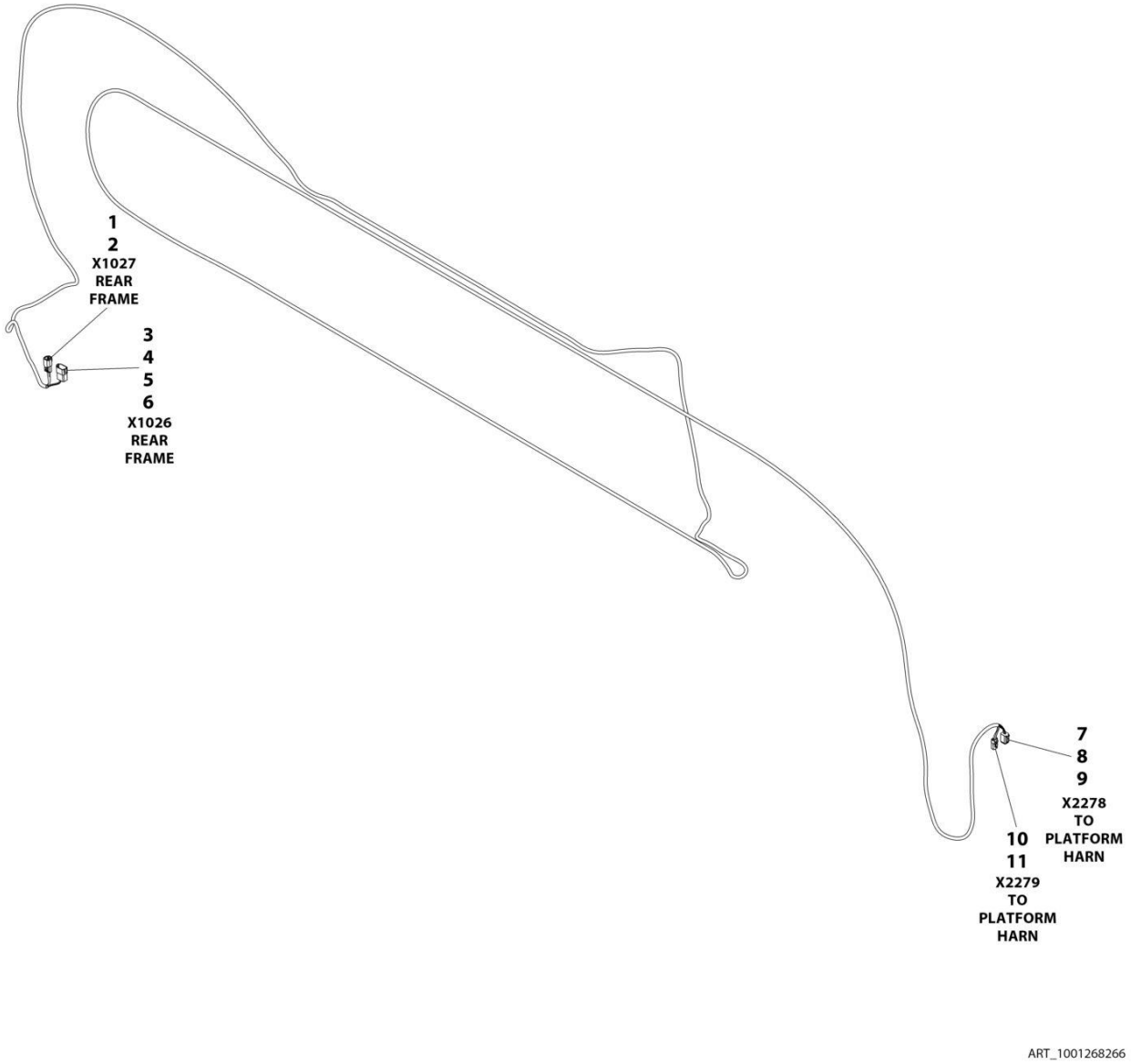

FIGURE 10-11. BOOM TO FRAME HARNESS

ITEM	PART NUMBER	QTY	DESCRIPTION	REV
	1001268266	Ref	BOOM TO FRAME HARNESS	A
1	4461017	1	Connector	
2	1001150610	2	Terminal	
3	4460931	1	Connector	
4	4460943	2	Terminal	
5	4460464	4	Terminal	
6	4460466	2	Plug	
7	4460894	1	Connector	
8	4460944	2	Terminal	
9	4460465	4	Terminal	
10	4461018	1	Connector	
11	1001150611	2	Terminal	

FIGURE 10-12. COUPLER ANGLE SENSOR INSTALLATION

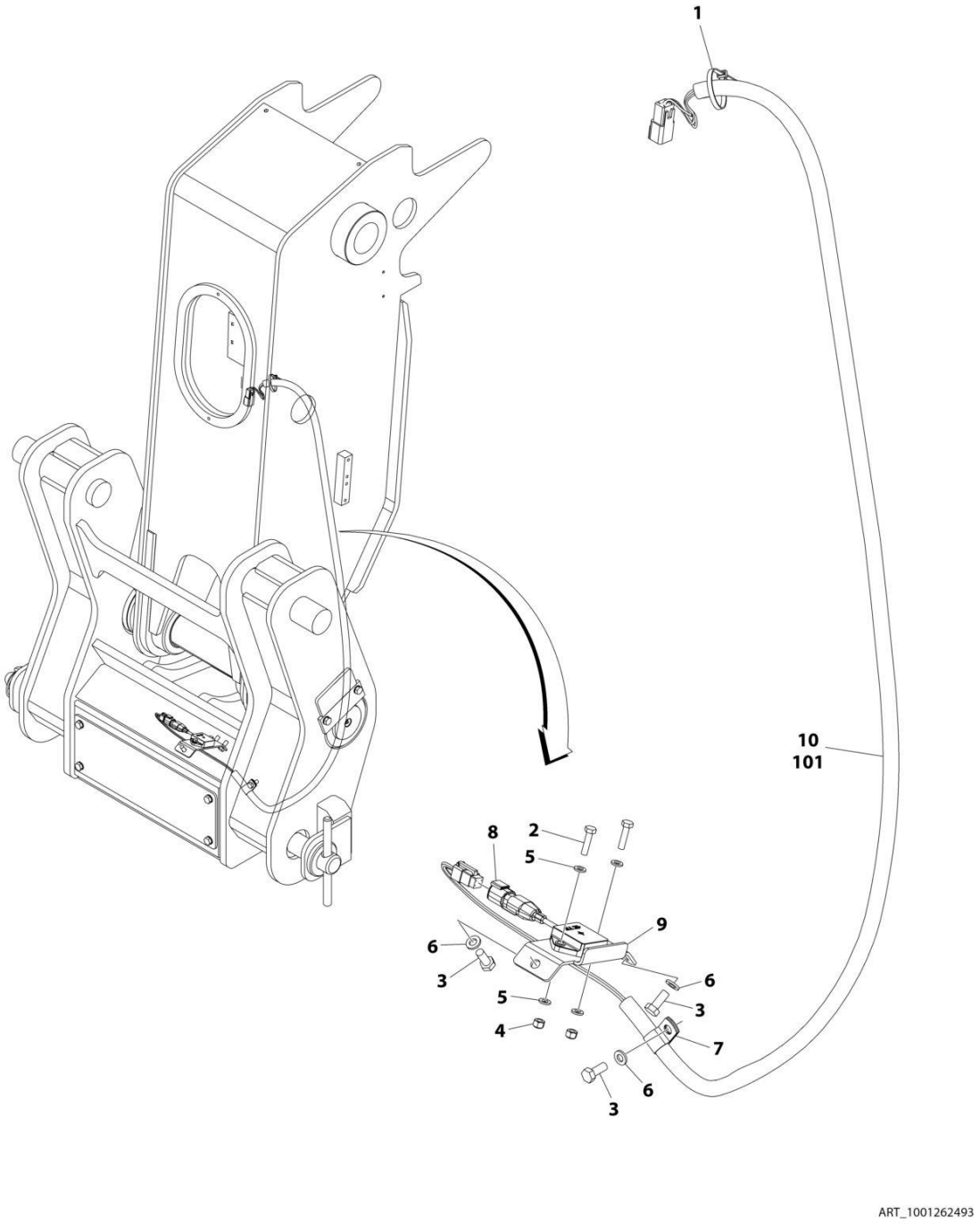

FIGURE 10-12. COUPLER ANGLE SENSOR INSTALLATION

ITEM	PART NUMBER	QTY	DESCRIPTION	REV
	1001262493	Ref	COUPLER ANGLE SENSOR INSTALLATION	C
1	471678	AR	Tie-Strap	
2	0700612	2	Bolt M6 x 25	
3	0760810	4	Bolt M8 x 20	
4	3290605	2	Nut M6 Grd8	
5	4811700	4	Washer M6	
6	4811900	4	Washer M8	
7	8406101	1	Clip, Tube	
8	1001256555	1	Sensor, Tilt Dual Axis	
9	1001263078	1	Plate, Sensor Mount	
10	1001263055	1	Harness, Tilt Sensor Jumper with Shield (Includes Item 101)	
101	1001256558	1	Harness, Tilt Sensor Jumper (See Separate Breakdown in this Section)	

FIGURE 10-13. BOOM ANGLE SENSOR INSTALLATION (STD)

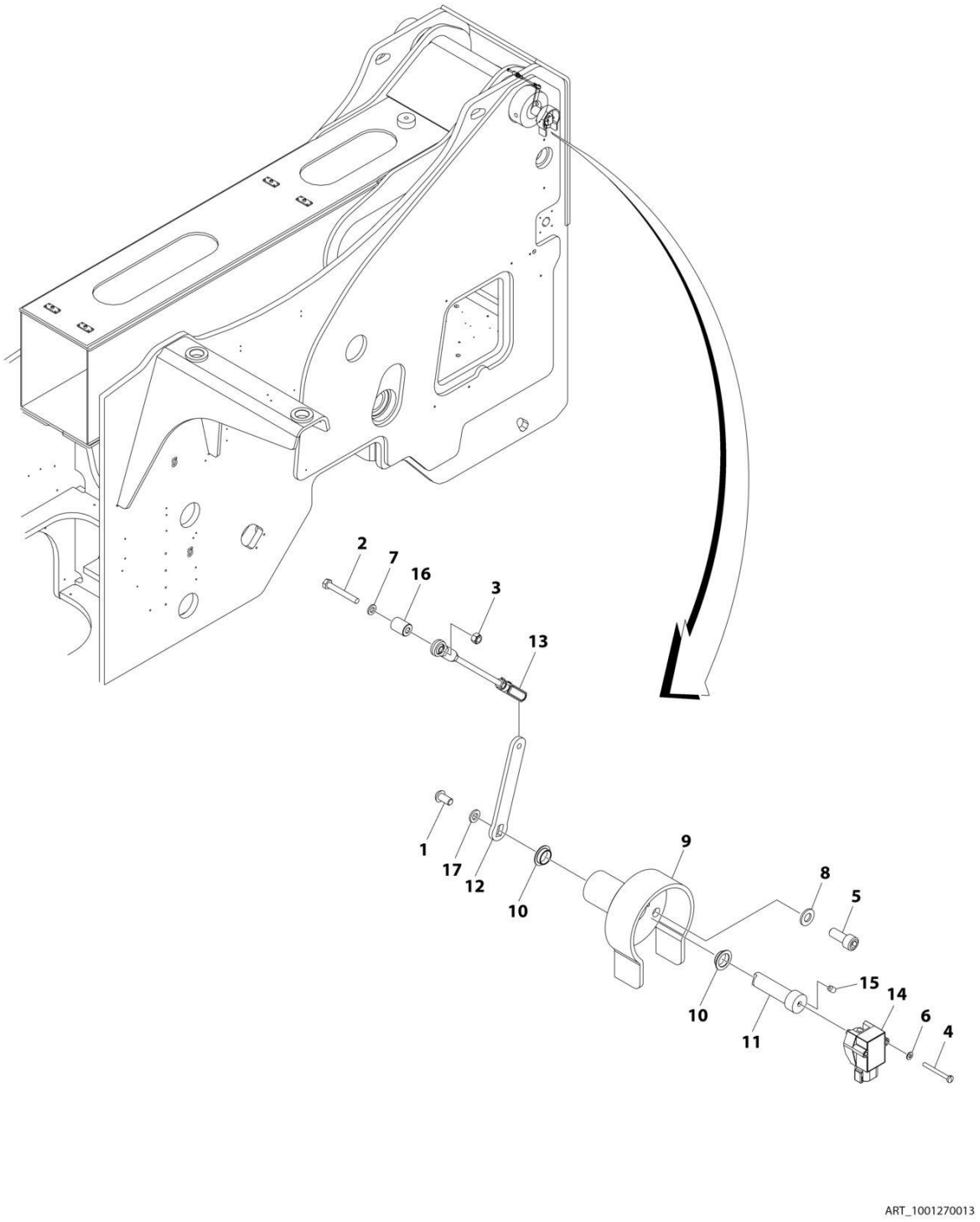

FIGURE 10-13. BOOM ANGLE SENSOR INSTALLATION (STD)

ITEM	PART NUMBER	QTY	DESCRIPTION	REV
	1001270013	Ref	BOOM ANGLE SENSOR INSTALLATION (STD)	A
1	0630615	1	Bolt M8 x 16	
2	0700620	1	Bolt M6 x 60	
3	3290605	1	Nut M6	
4	4010416	2	Screw M4 x 40	
5	4032009	3	Bolt M10 x 25	
6	4811400	2	Washer M4	
7	4811700	1	Washer M6	
8	4812000	3	Washer M10	
9	1001246985	1	Housing, Angle Sensor Mount	
10	1001246988	2	Bearing	
11	1001246989	1	Shaft	
12	1001246990	1	Link	
13	1001246991	1	Arm	
14	1001247458	1	Sensor, Boom Angle	
15	1001254643	1	Screw M6 x 10	
16	1001270015	1	Sleeve	
17	4811900	1	Washer M8	

FIGURE 10-14. BOOM RETRACT SENSOR INSTALLATION

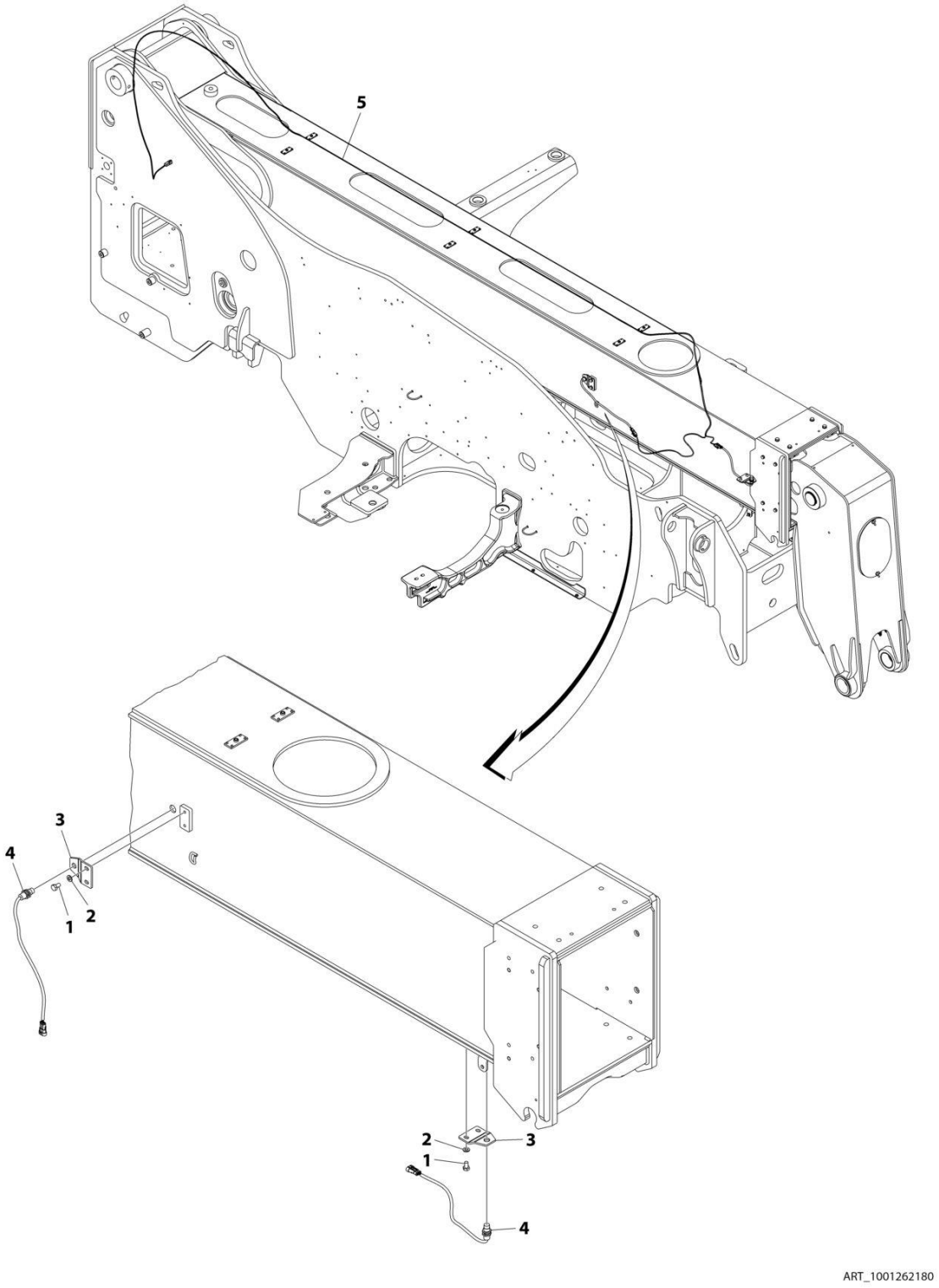

FIGURE 10-14. BOOM RETRACT SENSOR INSTALLATION

ITEM	PART NUMBER	QTY	DESCRIPTION	REV
	1001262180	Ref	BOOM RETRACT SENSOR INSTALLATION	A
1	0761009	4	Bolt	
2	4812000	4	Washer M10	
3	1001210567	2	Bracket	
4	1001183024	2	Sensor, Proximity	
5	1001247044	1	Soft Stop Harness (See Separate Breakdown in this Section)	

FIGURE 10-15. BOOM RETRACT SOFT STOP HARNESS

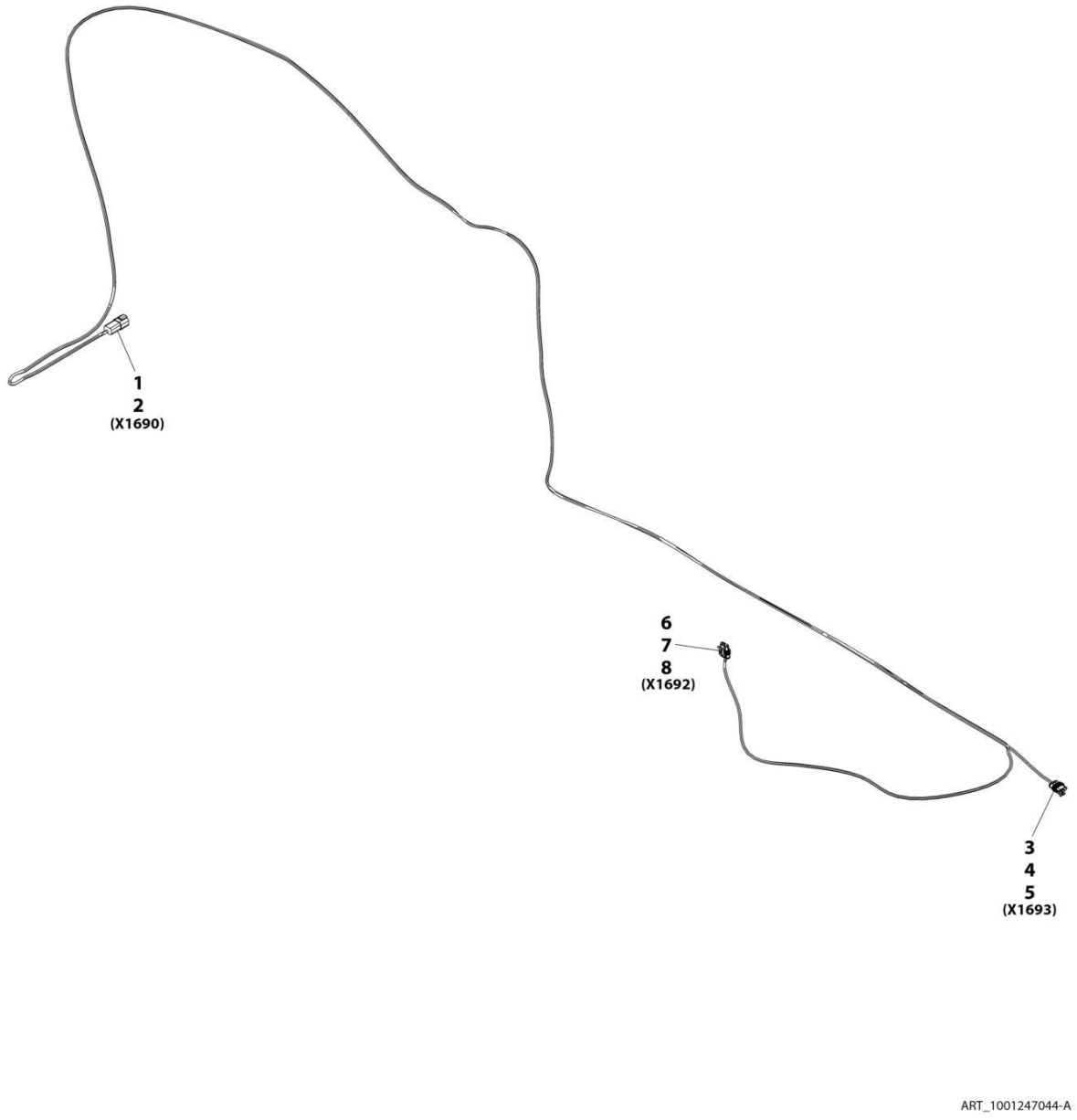

FIGURE 10-15. BOOM RETRACT SOFT STOP HARNESS

ITEM	PART NUMBER	QTY	DESCRIPTION	REV
	1001247044	Ref	Boom Retract Soft Stop Harness	A
1	4460932	1	Connector	
2	4460464	4	Terminal	
3	4461262	1	Connector	
4	1001107854	3	Terminal	
5	1001104498	3	Terminal Seal	
6	4461262	1	Connector	
7	1001107854	3	Terminal	
8	1001104498	3	Terminal Seal	

FIGURE 10-16. BOOM RIDE/FLOAT HARNESS

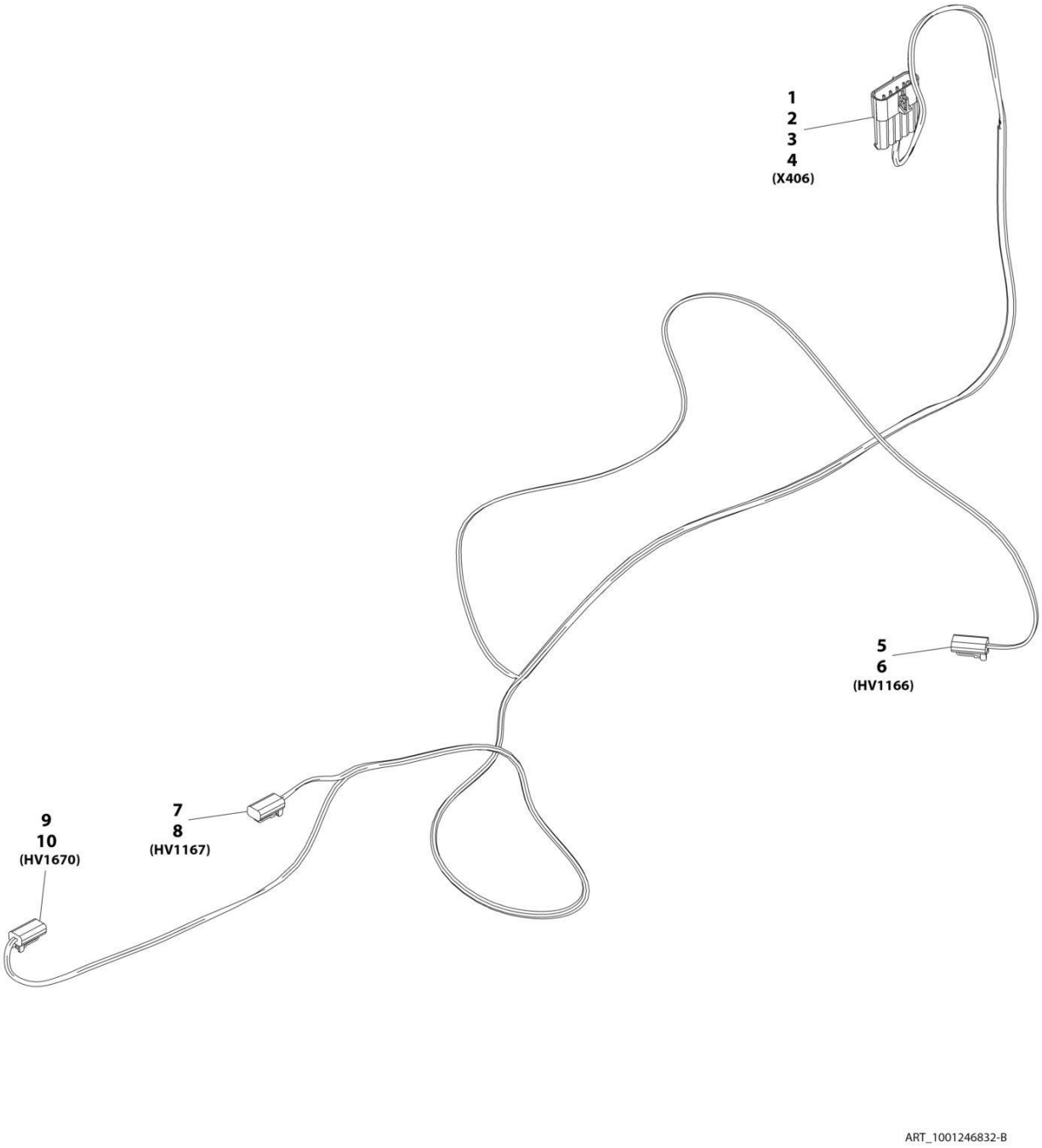

FIGURE 10-16. BOOM RIDE/FLOAT HARNESS

ITEM	PART NUMBER	QTY	DESCRIPTION	REV
	1001246832	Ref	Boom Ride/Float Harness	B
1	1001121727	1	Connector	
2	1001116745	4	Terminal	
3	1001116727	1	Plug	
4	4460458	4	Terminal Seal	
5	4460891	1	Connector	
6	4460465	2	Terminal	
7	4460891	1	Connector	
8	4460465	2	Terminal	
9	4460891	1	Connector	
10	4460465	2	Terminal	

FIGURE 10-17. CAB ELECTRICAL INSTALLATION

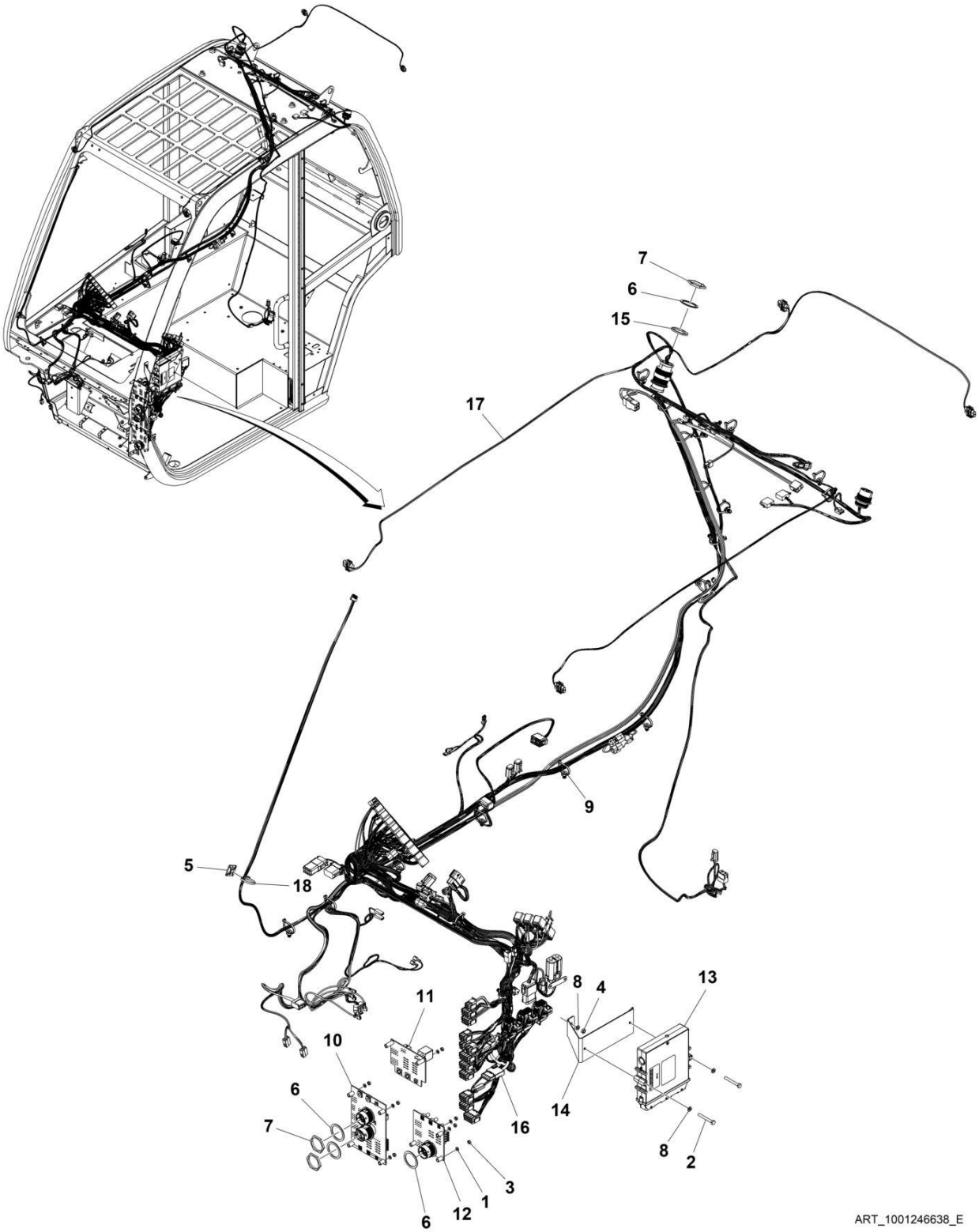

FIGURE 10-17. CAB ELECTRICAL INSTALLATION

ITEM	PART NUMBER	QTY	DESCRIPTION	REV
	1001246638	Ref	CAB ELECTRICAL INSTALLATION	E
1	120034	7	Washer, Plastic	
2	0700618	2	Bolt M6X50	
3	3290501	7	Nut M5	
4	3290601	2	Nut M6	
5	4460234	1	Mount, Tie-Strap	
6	4460496	5	Washer, Terminal Lock	
7	4460497	5	Nut, Terminal	
8	4811700	4	Washer M6	
9	1001146588	24	Tie-Strap	
10	1001161769	1	Standard Electrical Board Assembly (See Separate Breakdown in this Section)	
11	1001161770	1	Option 1 Electrical Board Assembly (See Separate Breakdown in this Section)	
12	1001161771	1	Option 2 Electrical Board Assembly (See Separate Breakdown in this Section)	
13	1001270466	1	Module, Cab	
14	1001178933	1	Bracket	
15	1001211693	2	Seal	
16	1001213988	1	Cable, Communication Analyzer	
17	1001282230	1	Cab Harness (See Separate Breakdown in this Section)	
18	1001008559	1	Tie-Strap	

FIGURE 10-18. CAB HARNESS

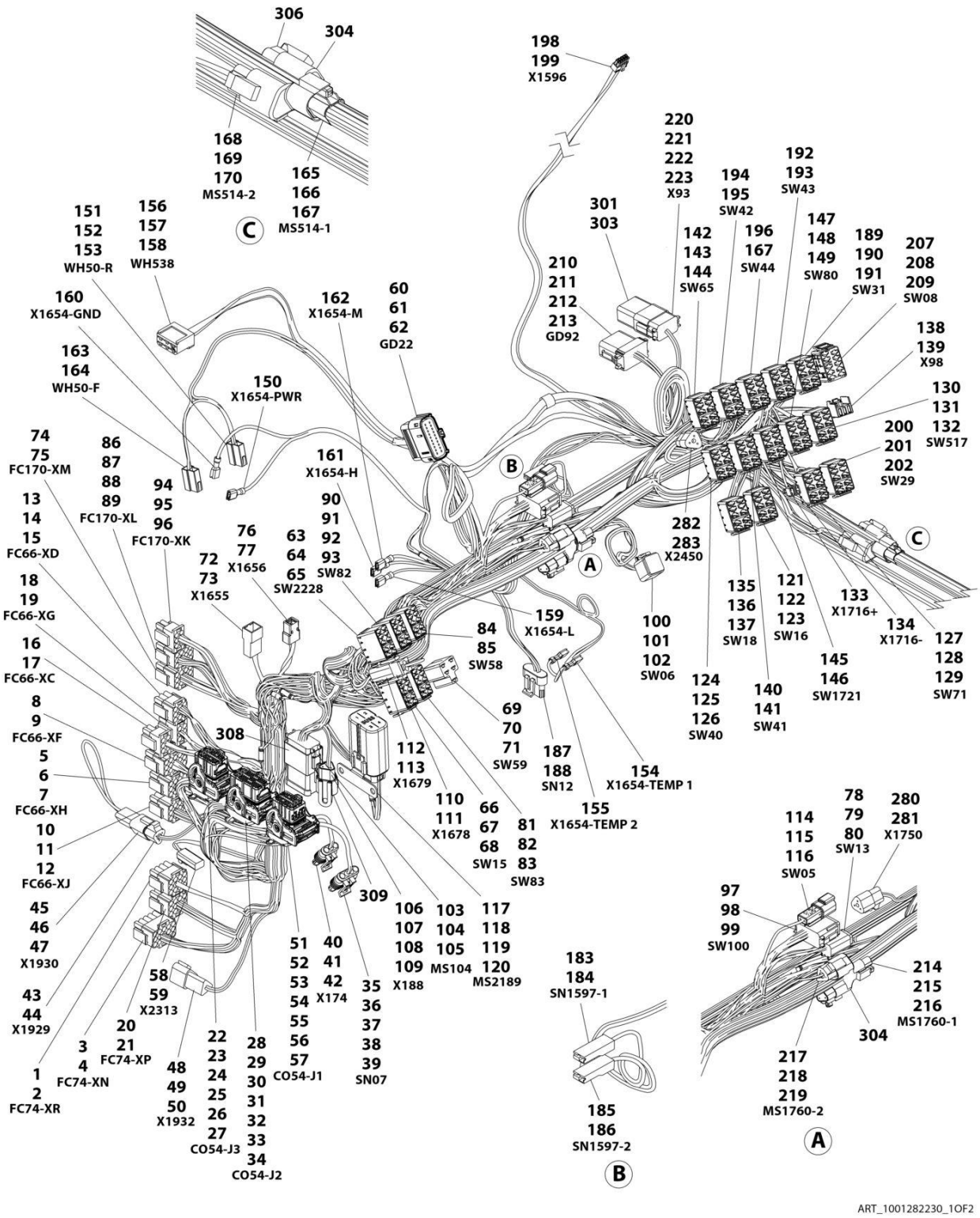

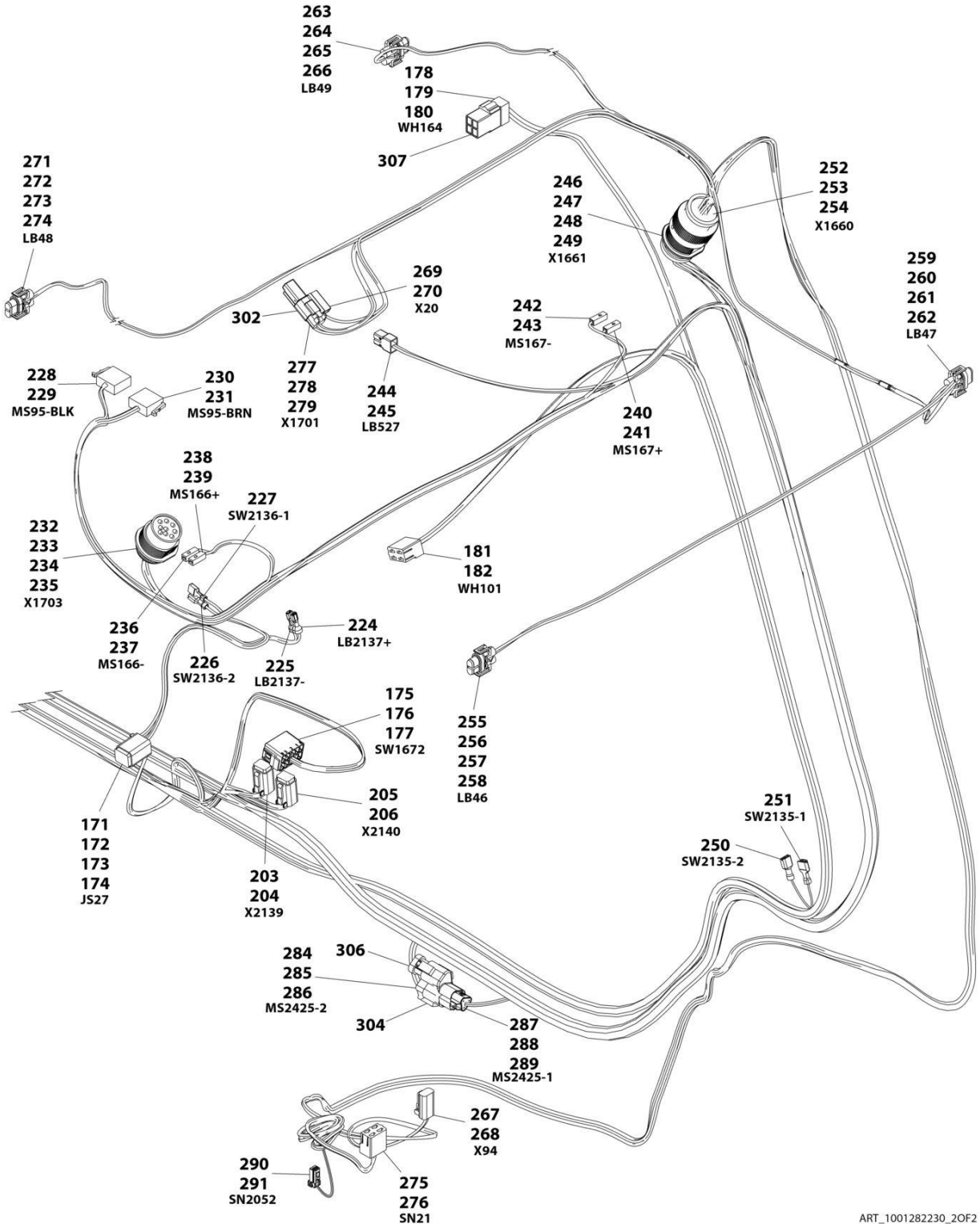
263
264
265
266
LB49
178
179
180
WH164
307
271
272
273
274
LB48
246
247
248
249
X1661
252
253
254
X1660
269
270
X20
302
242
243
MS167-
259
260
261
262
LB47
228
229
MS95-BLK
230
231
MS95-BRN
277
278
279
X1701
244
245
LB527
240
241
MS167+
238
239
MS166+
227
SW2136-1
232
233
234
235
X1703
181
182
WH101
236
237
MS166-
226
SW2136-2
225
LB2137-
224
LB2137+
175
176
177
SW1672
255
256
257
258
LB46
205
206
X2140
171
172
173
174
JS27
203
204
X2139
251
SW2135-1
250
SW2135-2
284
285
286
MS2425-2
306
304
287
288
289
MS2425-1
267
268
X94
290
291
SN2052
275
276
SN21
ART_1001282230_2OF2

FIGURE 10-18. CAB HARNESS

ITEM	PART NUMBER	QTY	DESCRIPTION	REV
	1001282230	Ref	CAB HARNESS	A
1	4460343	1	Connector	
2	4460267	5	Terminal	
3	4460434	1	Connector	
4	4460268	14	Terminal	
5	4460343	1	Connector	
6	4460268	8	Terminal	
7	10011223457	1	Terminal	
8	4460434	1	Connector	
9	4460268	15	Terminal	
10	4460343	1	Connector	
11	4460267	9	Terminal	
12	1001223456	1	Terminal	
13	4460265	1	Connector	
14	1001223457	3	Terminal	
15	4460268	6	Terminal	
16	4460225	1	Connector	
17	4460267	7	Terminal	
18	4460225	1	Connector	
19	4460268	5	Terminal	
20	4460343	1	Connector	
21	4460268	11	Terminal	
22	1001161959	1	Connector	
23	643191201	1	Cover	
24	1001161100	9	Plug	
25	1001161097	15	Terminal	
26	1001161098	1	Terminal	
27	1001161101	7	Plug	
28	1001160502	1	Connector	
29	643201301	1	Cover	
30	1001161097	22	Terminal	
31	1001161100	18	Plug	
32	1001161098	5	Terminal	
33	1001161099	1	Terminal	
34	1001161101	2	Plug	
35	1001103012	1	Connector	
36	1001116698	2	Plug	
37	1001116697	1	Terminal	
38	1001237212	1	Terminal	
39	1001104498	2	Terminal Seal	
40	4461262	1	Connector	
41	1001237212	3	Terminal	
42	1001104498	3	Terminal Seal	
43	4460539	1	Connector	
44	4460465	3	Terminal	
45	4460536	1	Connector	
46	4460464	2	Terminal	
47	4460466	1	Plug	
48	4460536	1	Connector	
49	4460464	2	Terminal	

ITEM	PART NUMBER	QTY	DESCRIPTION	REV
50	4460466	1	Plug	
51	1001160498	1	Connector	
52	643191201	1	Cover	
53	1001161097	23	Terminal	
54	1001161100	1	Plug	
55	1001161098	6	Terminal	
56	1001161099	1	Terminal	
57	1001161101	1	Plug	
58	4461290	1	Connector	
59	1001126008	2	Terminal	
60	1001162886	1	Connector	
61	1001163340	13	Plug	
62	1001162887	7	Terminal	
63	1001117081	1	Connector	
64	1001223455	2	Terminal	
65	1001118384	4	Terminal	
66	1001117081	1	Connector	
67	1001118384	6	Terminal	
68	1001223455	1	Terminal	
69	1001173411	1	Connector	
70	1001116716	3	Terminal	
71	1001104519	3	Terminal	
72	1001116999	1	Connector	
73	1001116700	4	Terminal	
74	4460343	1	Connector	
75	4460267	7	Terminal	
76	1001116991	1	Connector	
77	1001116723	2	Terminal	
78	4460933	1	Connector	
79	4460465	7	Terminal	
80	4460466	5	Plug	
81	1001117081	1	Connector	
82	1001118384	6	Terminal	
83	1001223455	1	Terminal	
84	1001117081	1	Connector	
85	1001118384	6	Terminal	
86	4460343	1	Connector	
87	4460268	8	Terminal	
88	4460906	1	Terminal	
89	1001223457	1	Terminal	
90	1001117081	1	Connector	
91	1001116723	2	Terminal	
92	1001223455	1	Terminal	
93	1001118384	4	Terminal	
94	4460225	1	Connector	
95	4460267	5	Terminal	
96	4460705	1	Terminal	
97	4460836	1	Connector	
98	4460942	4	Terminal	
99	4460465	8	Terminal	
100	4460894	1	Connector	

ITEM	PART NUMBER	QTY	DESCRIPTION	REV
101	4460465	4	Terminal	
102	4460466	2	Plug	
103	4460933	1	Connector	
104	1001125677	1	Mating Connector	
105	4460465	12	Terminal	
106	1001116812	1	Connector	
107	1001144296	1	Cap	
108	4460944	2	Terminal	
109	4460466	1	Plug	
110	4460320	1	Connector	
111	4460267	2	Terminal	
112	4460424	1	Connector	
113	4460268	2	Terminal	
114	4460897	1	Connector	
115	4460464	1	Terminal	
116	4460466	1	Plug	
117	1001184551	1	Connector	
118	1001177597	1	Diode, 6amp	
119	4460746	8	Terminal	
120	4460458	8	Seal	
121	1001117081	1	Connector	
122	1001118384	6	Terminal	
123	1001223455	1	Terminal	
124	1001117081	1	Connector	
125	1001118384	8	Terminal	
126	1001116723	2	Terminal	
127	1001117081	1	Connector	
128	1001118384	8	Terminal	
129	1001223455	2	Terminal	
130	1001117081	1	Connector	
131	1001118384	6	Terminal	
132	1001223455	1	Terminal	
133	1001194421	1	Terminal	
134	1001194421	1	Terminal	
135	1001117081	1	Connector	
136	1001223455	3	Terminal	
137	1001118384	8	Terminal	
138	1001118684	1	Connector	
139	1001116754	2	Terminal	
140	1001117081	1	Connector	
141	1001118384	7	Terminal	
142	1001117081	1	Connector	
143	1001118384	6	Terminal	
144	1001223455	1	Terminal	
145	1001117081	1	Connector	
146	1001118384	7	Terminal	
147	1001117081	1	Connector	
148	1001118384	6	Terminal	
149	1001223455	1	Terminal	
150	8220051	1	Terminal	
151	4460994	1	Connector	

ITEM	PART NUMBER	QTY	DESCRIPTION	REV
152	1001118384	1	Terminal	
153	1001116723	2	Terminal	
154	1001194421	1	Terminal	
155	1001194421	1	Terminal	
156	1001116997	1	Connector	
157	1001118384	4	Terminal	
158	1001116723	1	Terminal	
159	8220051	1	Terminal	
160	8220051	1	Terminal	
161	8220051	1	Terminal	
162	8220051	1	Terminal	
163	4460994	1	Terminal	
164	1001118384	2	Terminal	
165	1001116812	1	Connector	
166	4460944	2	Terminal	
167	4460466	1	Plug	
168	4460539	1	Connector	
169	4460944	2	Terminal	
170	4460466	1	Plug	
171	4460894	1	Connector	
172	4460465	3	Terminal	
173	4460466	1	Plug	
174	4460944	2	Terminal	
175	1001117081	1	Connector	
176	1001223455	4	Terminal	
177	1001118384	2	Terminal	
178	1001116986	1	Connector	
179	1001117011	1	Mating Connector	
180	1001118384	4	Terminal	
181	1001116986	1	Connector	
182	1001118384	4	Terminal	
183	1001116995	1	Connector	
184	1001118379	1	Terminal	
185	1001116995	1	Connector	
186	1001118379	1	Terminal	
187	1001230931	1	Connector	
188	1001116748	6	Terminal	
189	1001117081	1	Connector	
190	1001118384	7	Terminal	
191	1001223455	1	Terminal	
192	1001117081	1	Connector	
193	1001118384	6	Terminal	
194	1001117081	1	Connector	
195	1001118384	6	Terminal	
196	1001117081	1	Connector	
197	1001118384	6	Terminal	
198	1001150735	1	Connector	
199	1001150737	7	Terminal	
200	1001117081	1	Connector	
201	1001118384	7	Terminal	
202	1001223455	2	Terminal	

ITEM	PART NUMBER	QTY	DESCRIPTION	REV
203	4460884	1	Connector	
204	4460465	4	Terminal	
205	4460884	1	Connector	
206	4460465	4	Terminal	
207	1001117079	1	Connector	
208	1001118384	4	Terminal	
209	1001223455	3	Terminal	
210	1001176333	1	Connector	
211	4460466	11	Terminal	
212	4460465	3	Terminal	
213	4460944	4	Terminal	
214	1001116812	1	Connector	
215	4460944	2	Terminal	
216	4460466	1	Plug	
217	4460539	1	Connector	
218	4460944	2	Terminal	
219	4460466	1	Plug	
220	4460930	1	Connector	
221	4460931	1	Mating Connector	
222	4460466	6	Plug	
223	4460465	2	Terminal	
224	1001201885	1	Connector	
225	1001201885	1	Connector	
226	1001194421	1	Terminal	
227	1001194421	1	Terminal	
228	1001116985	1	Connector	
229	1001118386	3	Terminal	
230	1001116984	1	Connector	
231	1001118386	4	Terminal	
232	1001112612	1	Connector	
233	4460464	4	Terminal	
234	4460943	4	Terminal	
235	4460466	1	Plug	
236	1001116998	1	Connector	
237	1001118387	1	Terminal	
238	1001116998	1	Connector	
239	1001118387	1	Terminal	
240	1001116998	1	Connector	
241	1001118387	1	Terminal	
242	1001116998	1	Connector	
243	1001118387	1	Terminal	
244	1001116991	1	Connector	
245	1001118384	2	Terminal	
246	1001137000	1	Connector	
247	4460928	2	Terminal	
248	1001126008	12	Terminal	
249	4460518	8	Plug	
250	1001194421	1	Terminal	
251	1001194421	1	Terminal	
252	1001136999	1	Connector	
253	1001126011	14	Terminal	

ITEM	PART NUMBER	QTY	DESCRIPTION	REV
254	4460518	7	Plug	
255	4461115	1	Connector	
256	1001103564	1	Lock, Terminal	
257	4460746	2	Terminal	
258	4460458	2	Terminal Seal	
259	4461115	1	Connector	
260	1001103564	1	Lock, Terminal	
261	4460746	2	Terminal	
262	4460458	2	Terminal Seal	
263	4461115	1	Connector	
264	1001103564	1	Lock, Terminal	
265	4460746	2	Terminal	
266	4460458	2	Terminal Seal	
267	4460891	1	Connector	
268	4460465	2	Terminal	
269	4460944	1	Connector	
270	1001118384	2	Terminal	
271	4461115	1	Connector	
272	1001103564	1	Lock, Terminal	
273	4460746	2	Terminal	
274	4460458	2	Terminal Seal	
275	1001116986	1	Connector	
276	1001118384	5	Terminal	
277	4460891	1	Connector	
278	4460897	1	Connector	
279	4460465	2	Terminal	
280	4460539	1	Connector	
281	4460465	3	Terminal	
282	4460539	1	Connector	
283	4460465	3	Terminal	
284	4460539	1	Connector	
285	4460944	2	Terminal	
286	4460466	1	Plug	
287	1001116812	1	Connector	
288	4460944	2	Terminal	
289	4460466	1	Plug	
290	1001264844	1	Connector	
291	1001264861	2	Terminal	
301	4460466	8	Plug	
302	4460897	1	Connector	
303	4460931	1	Connector	
304	4460945	3	Terminal	
305	1001008559	3	Tie-Strap (Not Shown)	
306	1001116815	2	Connector	
307	1001117011	1	Connector	
308	1001119020	1	Connector	
309	1001144296	1	Cap	

FIGURE 10-19. CAB - STANDARD ELECTRICAL BOARD ASSEMBLY

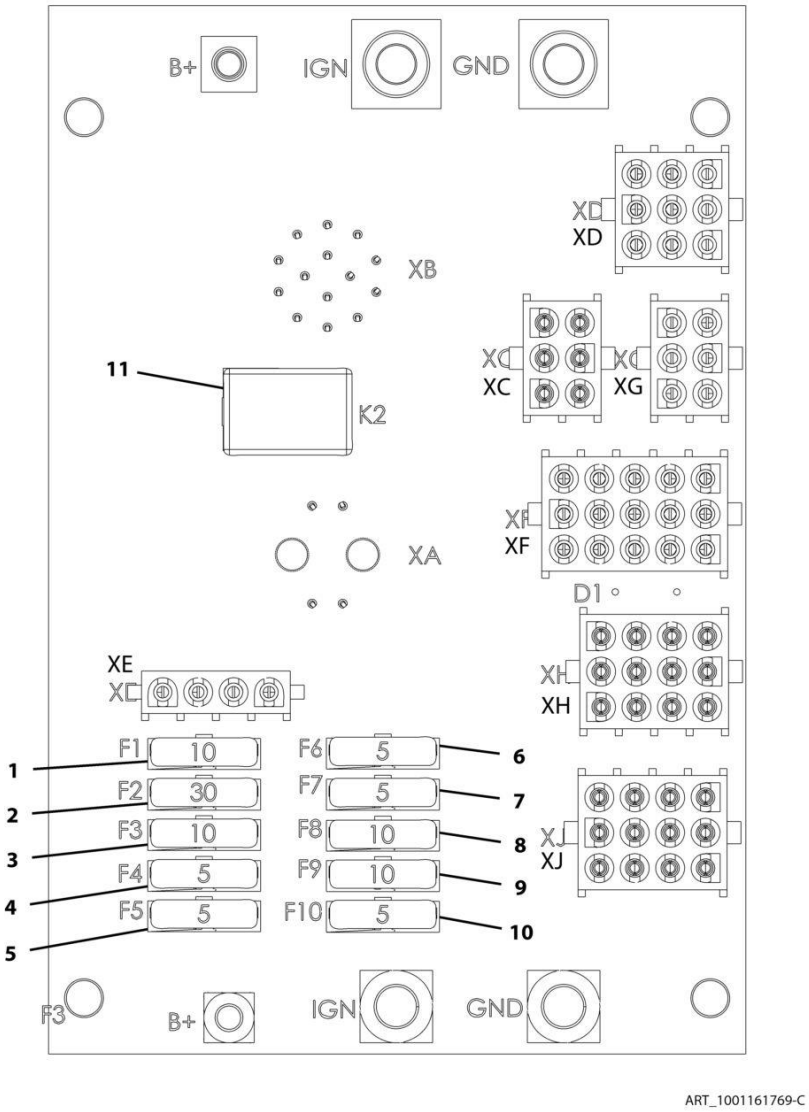

FIGURE 10-19. CAB - STANDARD ELECTRICAL BOARD ASSEMBLY

ITEM	PART NUMBER	QTY	DESCRIPTION	REV
	1001161769	Ref	Standard Electrical Board Assembly	C
1	80983191	1	Fuse, 10AMP	
2	8229245	1	Fuse, 30AMP	
3	80983191	1	Fuse, 10AMP	
4	8229242	1	Fuse, 5AMP	
5	8229242	1	Fuse, 5AMP	
6	8229242	1	Fuse, 5AMP	
7	8229242	1	Fuse, 5AMP	
8	80983191	1	Fuse, 10AMP	
9	80983191	1	Fuse, 10AMP	
10	8229242	1	Fuse, 5AMP	
11	70026292	1	Fuse, 35AMP	

FIGURE 10-20. CAB - OPTION 1 ELECTRICAL BOARD ASSEMBLY

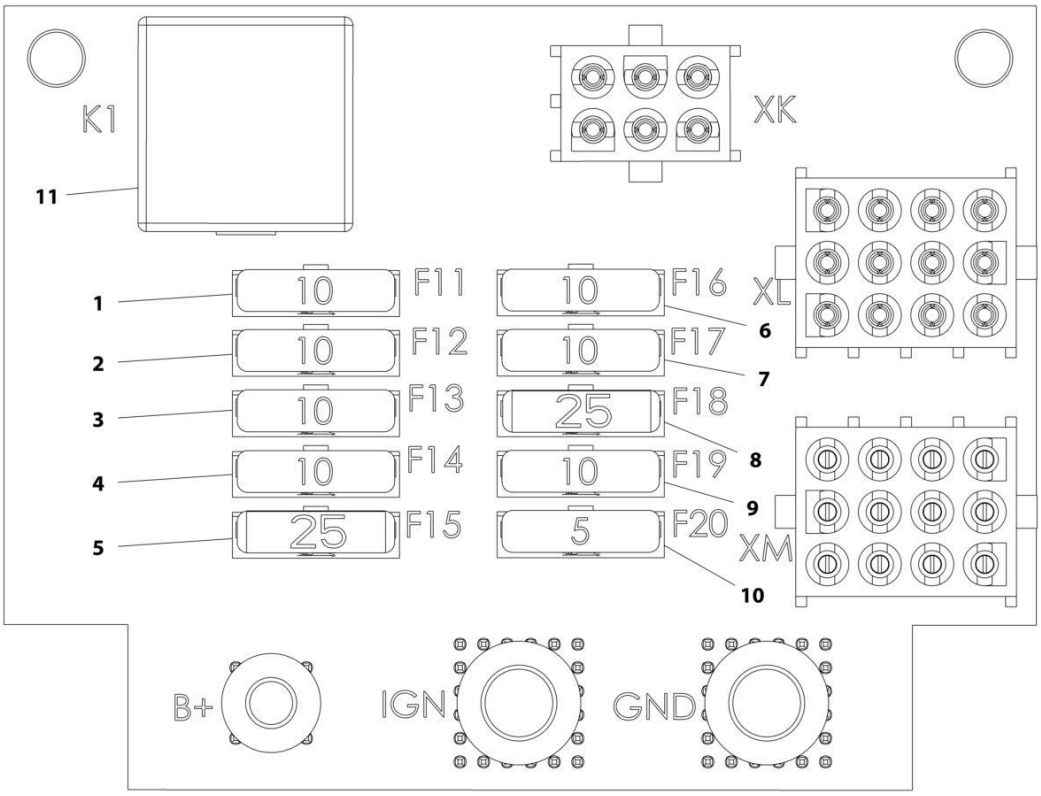

FIGURE 10-20. CAB - OPTION 1 ELECTRICAL BOARD ASSEMBLY

ITEM	PART NUMBER	QTY	DESCRIPTION	REV
	1001161770	Ref	Option 1 Electrical Board Assembly	C
1	80983191	1	Fuse, 10AMP	
2	80983191	1	Fuse, 10AMP	
3	80983191	1	Fuse, 10AMP	
4	80983191	1	Fuse, 10AMP	
5	8229247	1	Fuse, 25AMP	
6	80983191	1	Fuse, 10AMP	
7	80983191	1	Fuse, 10AMP	
8	8229247	1	Fuse, 25AMP	
9	80983191	1	Fuse, 10AMP	
10	8229242	1	Fuse, 5AMP	
11	70026293	1	Fuse, 50AMP	

FIGURE 10-21. CAB - OPTION 2 ELECTRICAL BOARD ASSEMBLY

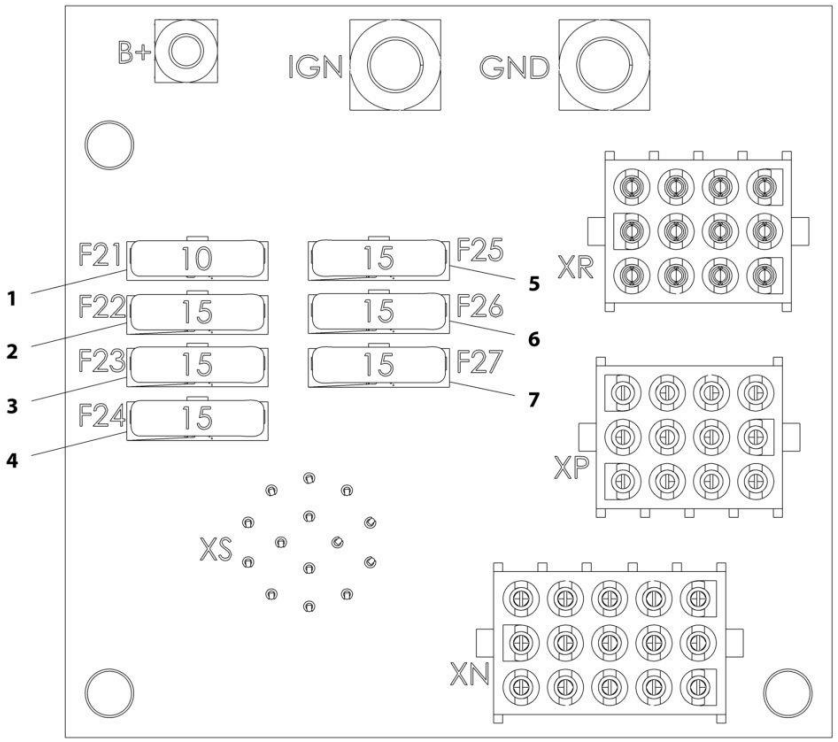

ART_1001161771-B

FIGURE 10-21. CAB - OPTION 2 ELECTRICAL BOARD ASSEMBLY

ITEM	PART NUMBER	QTY	DESCRIPTION	REV
	1001161771	Ref	Option 2 Electrical Board Assembly	B
1	80983191	1	Fuse, 10AMP	
2	8229244	1	Fuse, 15AMP	
3	8229244	1	Fuse, 15AMP	
4	8229244	1	Fuse, 15AMP	
5	8229244	1	Fuse, 15AMP	
6	8229244	1	Fuse, 15AMP	
7	8229244	1	Fuse, 15AMP	

FIGURE 10-22. CAB - A/C OPTION HARNESS

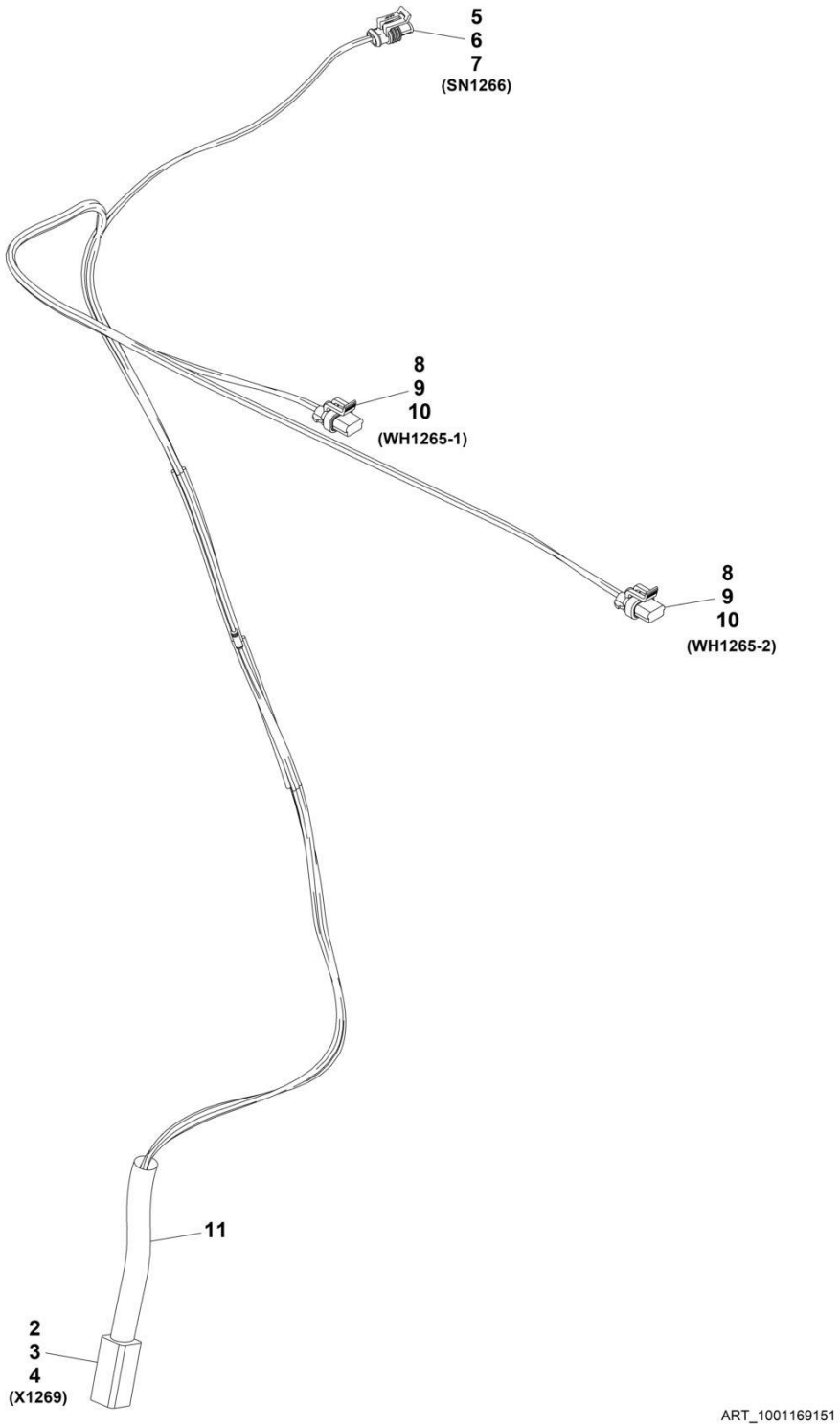

FIGURE 10-22. CAB - A/C OPTION HARNESS

ITEM	PART NUMBER	QTY	DESCRIPTION	REV
	1001169151	Ref	A/C Option Harness	G
2	4460899	1	Connector	
3	4460941	4	Terminal	
4	4460464	2	Terminal	
5	4461118	1	Connector	
6	1001107854	2	Terminal	
7	1001116763	2	Seal	
8	1001117021	2	Connector	
9	1001116747	4	Terminal	
10	4460789	4	Seal	
11	70028546	1	Backshell	

FIGURE 10-23. CAB - DASH ELECTRICAL INSTALLATION (2733)

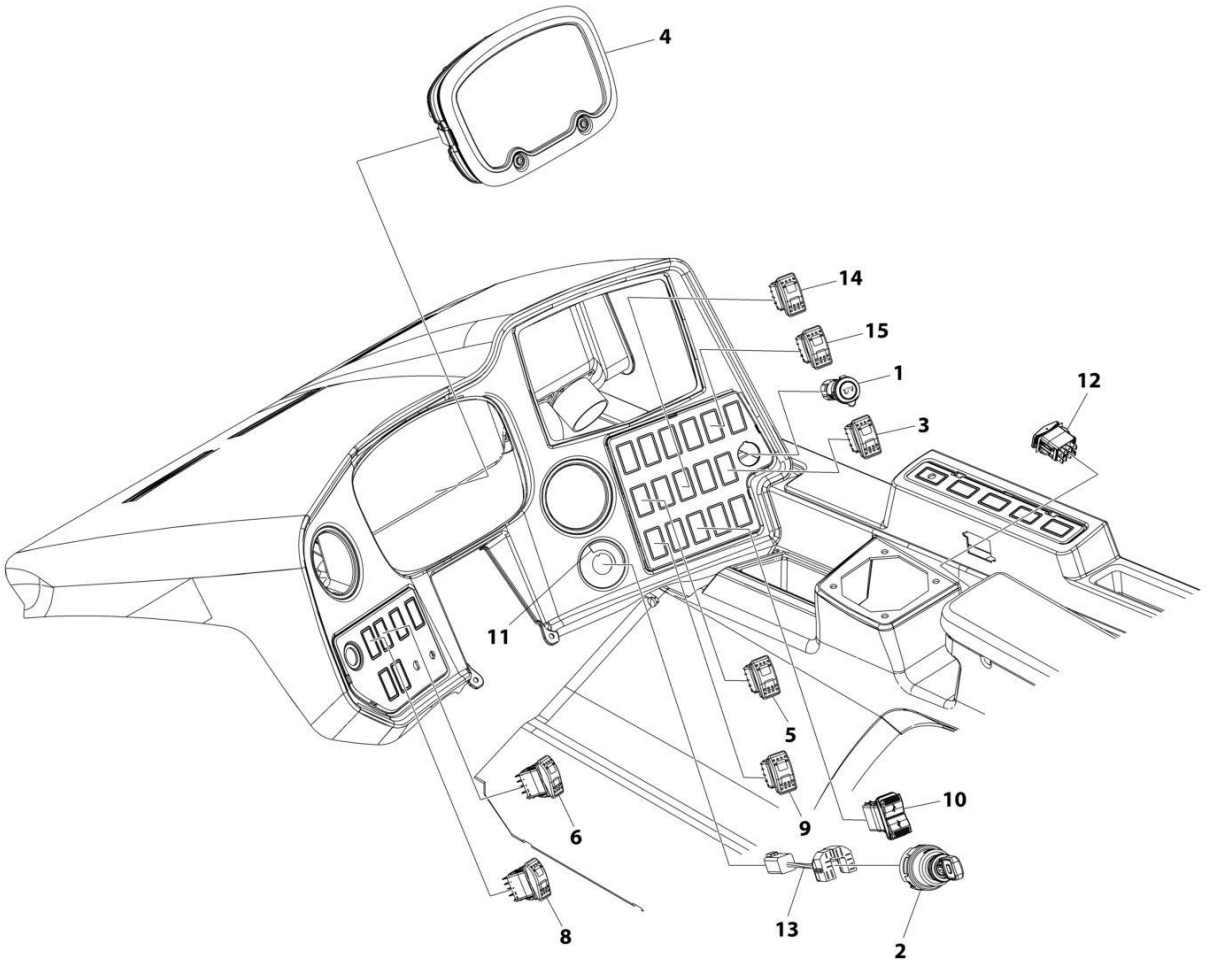

FIGURE 10-23. CAB - DASH ELECTRICAL INSTALLATION (2733)

ITEM	PART NUMBER	QTY	DESCRIPTION	REV
	1001249631	Ref	DASH ELECTRICAL INSTALLATION	C
1	1001095804	1	Connector, 12V Power Socket	
2	1001102502	1	Switch, 4 Position Key	
3	1001104654	1	Switch, AUX Decomp	
4	1001158146	1	Cluster, Electrical Gauge	
5	1001159735	1	Switch, Rear Wiper	
6	1001159741	1	Switch, Constant AUX	
8	1001159753	1	Switch, Park Brake	
9	1001159849	1	Switch, Steer Mode	
10	1001174712	1	Charger, USB	
11	1001181531	1	Decal, Ignition Switch	
12	1001212470	1	Switch, Frame Level	
13	1001223968	1	Ignition Switch Harness (See Separate Breakdown in this Section)	
14	1001159746	1	Switch, Auxiliary Electric	
15	1001285715	1	Switch, Beacon	

FIGURE 10-24. CAB - DASH ELECTRICAL INSTALLATION (12010)

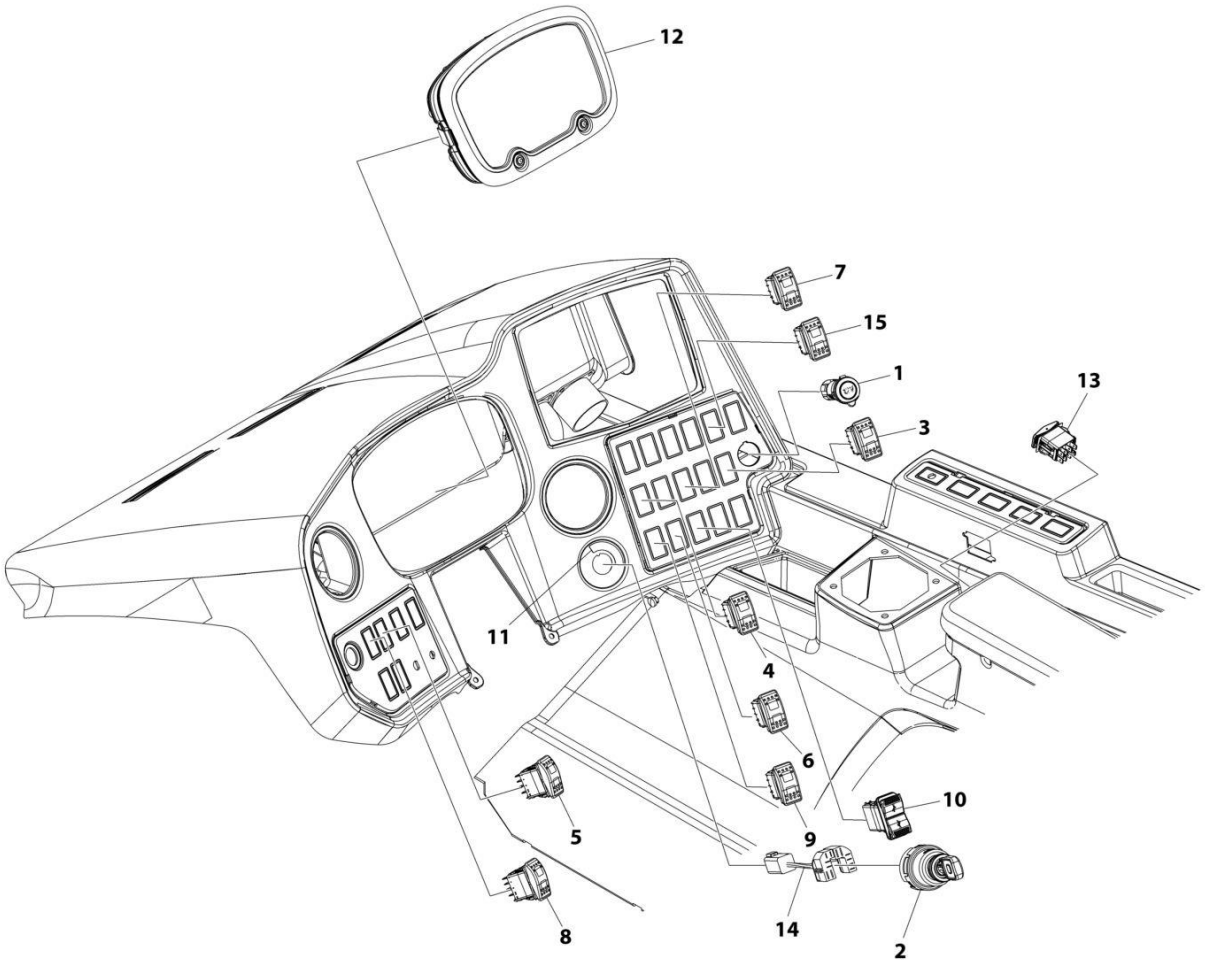

ART_1001270193_B

FIGURE 10-24. CAB - DASH ELECTRICAL INSTALLATION (12010)

ITEM	PART NUMBER	QTY	DESCRIPTION	REV
	1001270193	Ref	CAB - DASH ELECTRICAL INSTALLATION	B
1	1001095804	1	Connector, 12V Power Socket	
2	1001102502	1	Switch, 4 Position Key	
3	1001104654	1	Switch, AUX Decomp	
4	1001159735	1	Switch, Rear Wiper	
5	1001159741	1	Switch, Constant AUX	
6	1001159743	1	Switch, Road Use	
7	1001159746	1	Switch, Auxiliary Electric	
8	1001159753	1	Switch, Park Brake	
9	1001159849	1	Switch, Steer Mode	
10	1001174712	1	Charger, USB	
11	1001181531	1	Decal, Ignition Switch	
12	1001202454	1	Cluster, Electrical Gauge	
13	1001212470	1	Switch, Frame Level	
14	1001223968	1	Ignition Switch Harness (See Separate Breakdown in this Section)	
15	1001285715	1	Switch, Beacon	

FIGURE 10-25. CAB - IGNITION SWITCH HARNESS

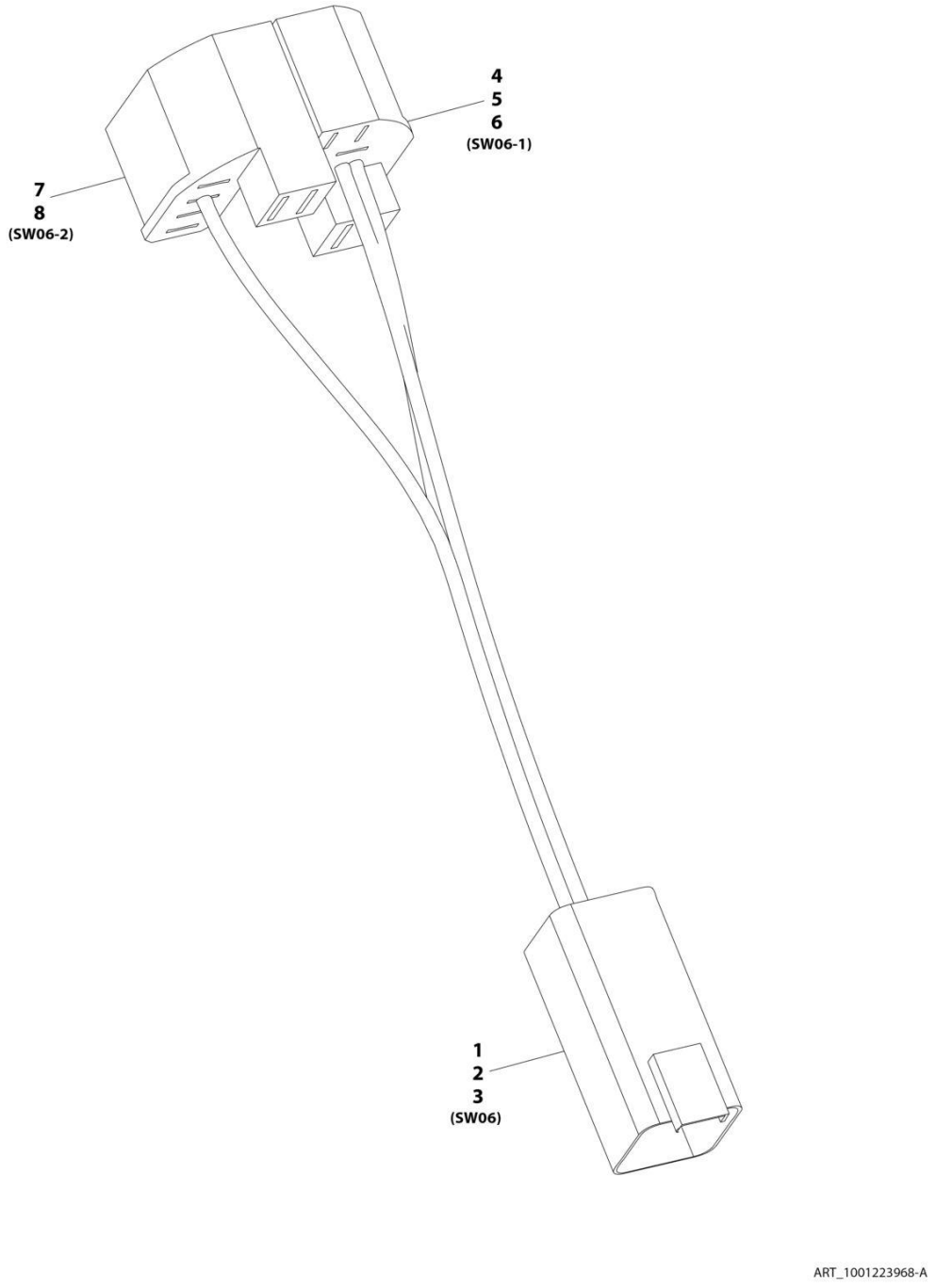

FIGURE 10-25. CAB - IGNITION SWITCH HARNESS

ITEM	PART NUMBER	QTY	DESCRIPTION	REV
	1001223968	Ref	Ignition Switch Harness	A
1	4460899	1	Connector	
2	4460464	3	Terminal	
3	4460466	3	Plug	
4	1001118685	1	Connector	
5	1001104519	1	Terminal	
6	1001118383	1	Terminal	
7	1001117121	1	Connector	
8	1001104519	1	Terminal	

FIGURE 10-26. CAB - LIGHT SWITCH INSTALLATION

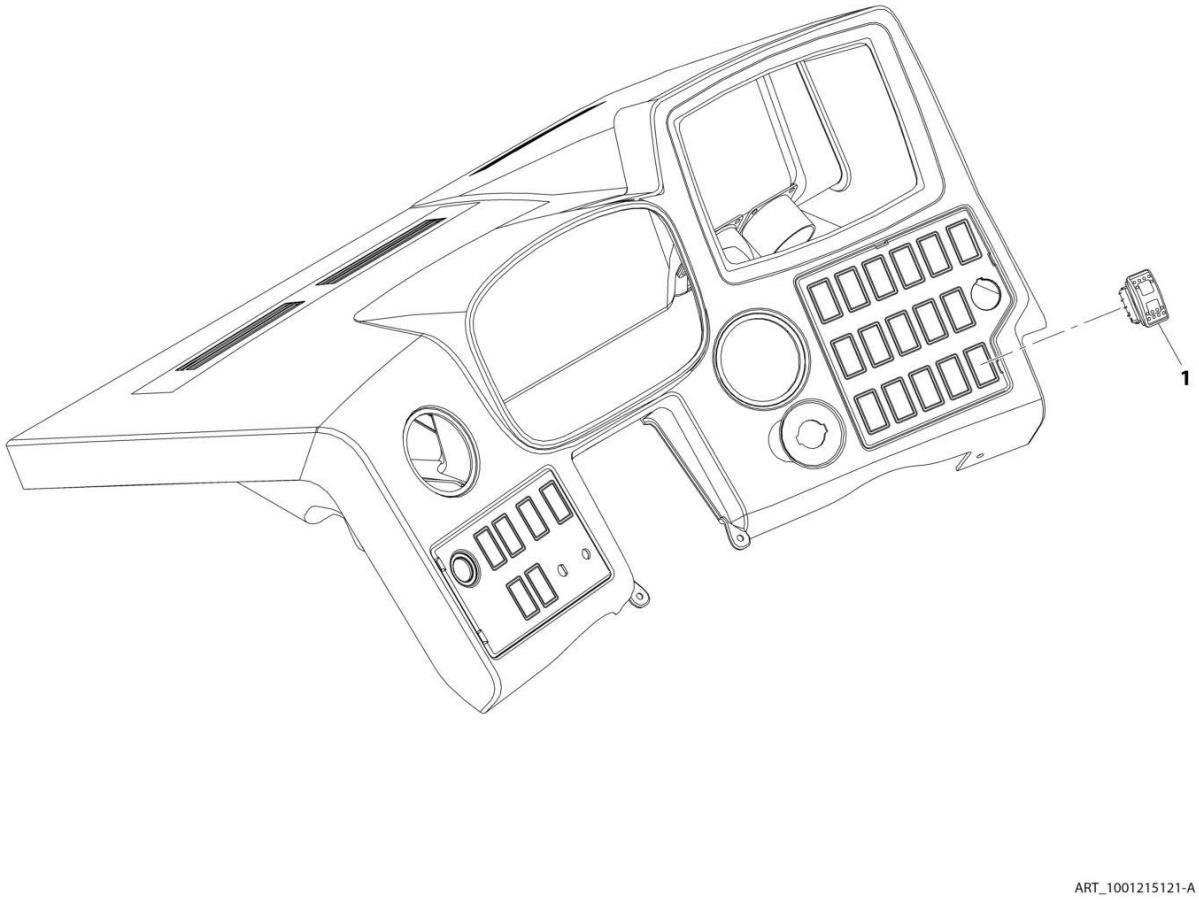

FIGURE 10-26. CAB - LIGHT SWITCH INSTALLATION

ITEM	PART NUMBER	QTY	DESCRIPTION	REV
	1001215121	Ref	Light Switch Installation	A
1	1001163639	1	Switch, Light	

FIGURE 10-27. CAB OPTION HARNESS

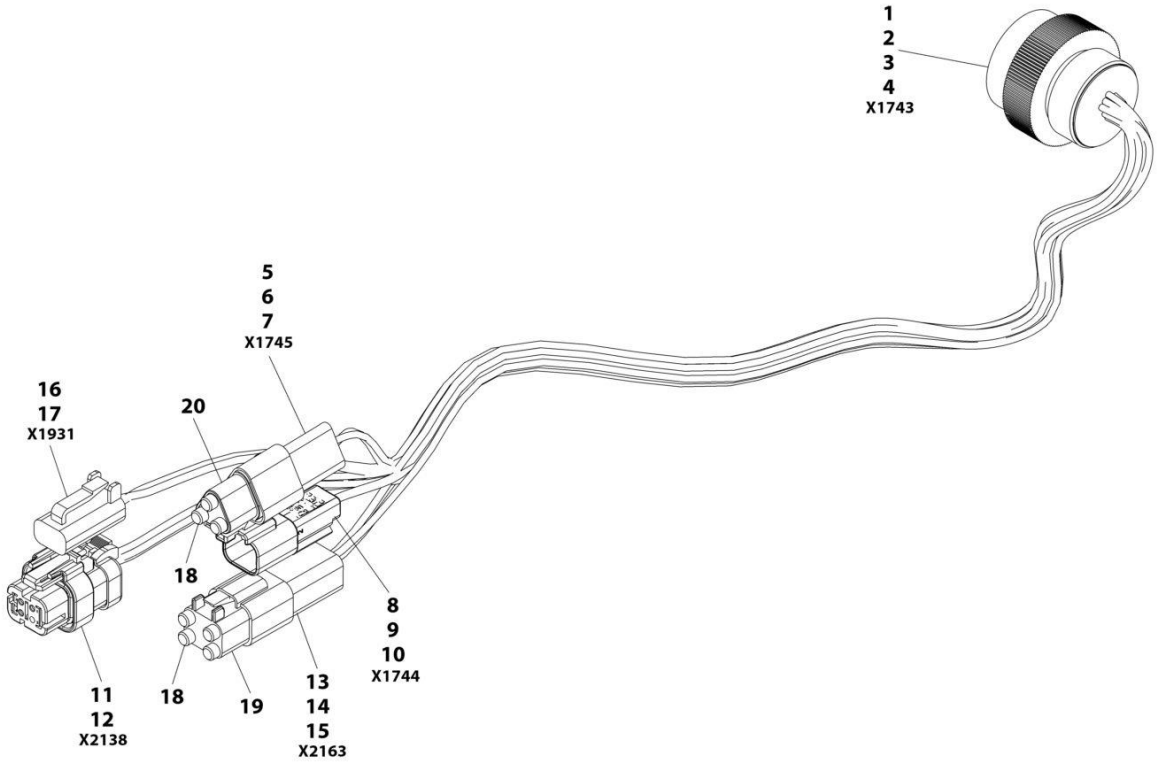

ART_1001243044

FIGURE 10-27. CAB OPTION HARNESS

ITEM	PART NUMBER	QTY	DESCRIPTION	REV
	1001243044	Ref	Cab Option Harness	D
1	4461015	1	Connector	
2	4460465	9	Terminal	
3	4460466	2	Plug	
4	4460942	1	Terminal	
5	1001144147	1	Connector	
6	4460943	2	Terminal	
7	4460466	1	Plug	
8	4460897	1	Connector	
9	4460941	1	Terminal	
10	4460466	1	Plug	
11	1001130962	1	Connector	
12	4460465	4	Terminal	
13	4460932	1	Connector	
14	4460464	3	Terminal	
15	4460466	1	Plug	
16	4460891	1	Connector	
17	4460465	2	Terminal	
18	4460466	4	Plug	
19	4460884	1	Plug	
20	1001116815	1	Plug - 3 Position	

FIGURE 10-28. CAB - SEAT ADAPTOR HARNESS

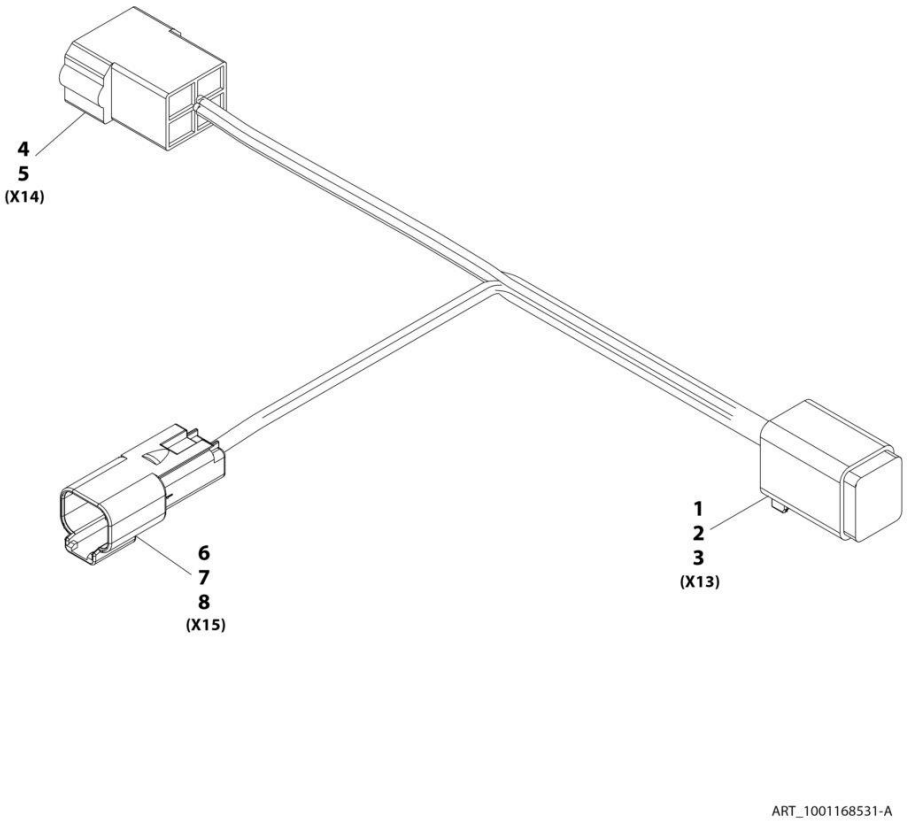

FIGURE 10-28. CAB - SEAT ADAPTOR HARNESS

ITEM	PART NUMBER	QTY	DESCRIPTION	REV
	1001168531	Ref	Seat Adaptor Harness	A
1	4460894	1	Connector	
2	91504107	1	Lock, Connector	
3	4460465	6	Terminal	
4	1001117011	1	Connector	
5	1001116700	3	Terminal	
6	4460897	1	Connector	
7	80604017	1	Lock, Connector	
8	4460943	2	Terminal	

FIGURE 10-29. CAB SEAT BELT ALARM HARNESS

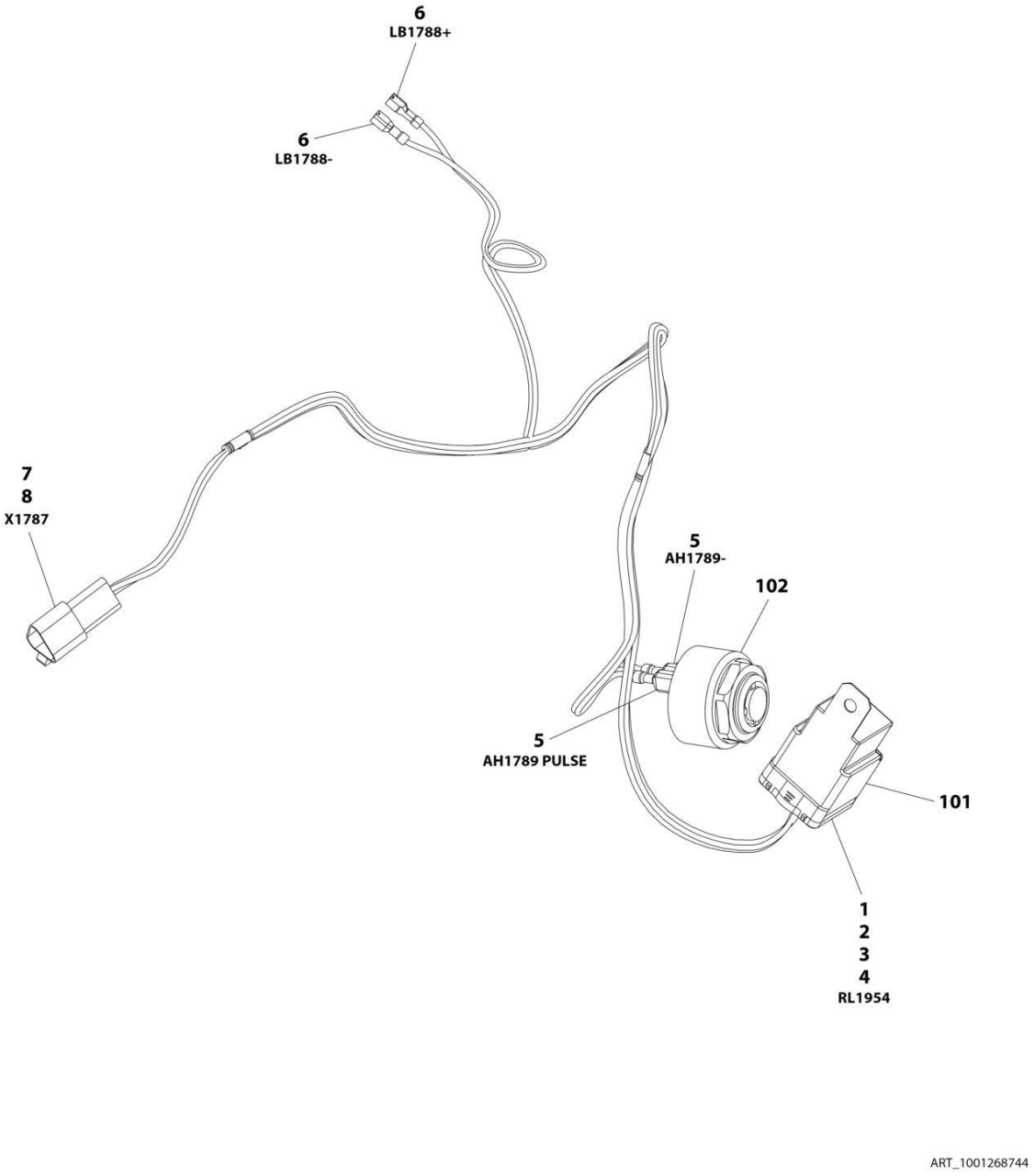

FIGURE 10-29. CAB SEAT BELT ALARM HARNESS

ITEM	PART NUMBER	QTY	DESCRIPTION	REV
	1001268744	Ref	SEAT BELT ALARAM HARNESS	A
1	1001231398	1	Connector	
2	1001231400	4	Terminal	
3	1001231406	1	Terminal	
4	1001231404	4	Plug	
5	1001194421	2	Terminal	
6	1001201885	2	Terminal	
7	4460536	1	Connector	
8	4460464	3	Terminal	
101	3740080	1	Relay, Weather Proof	
102	1001091751	1	Buzzer Alarm	

FIGURE 10-30. CLEARSKY INSTALLATION

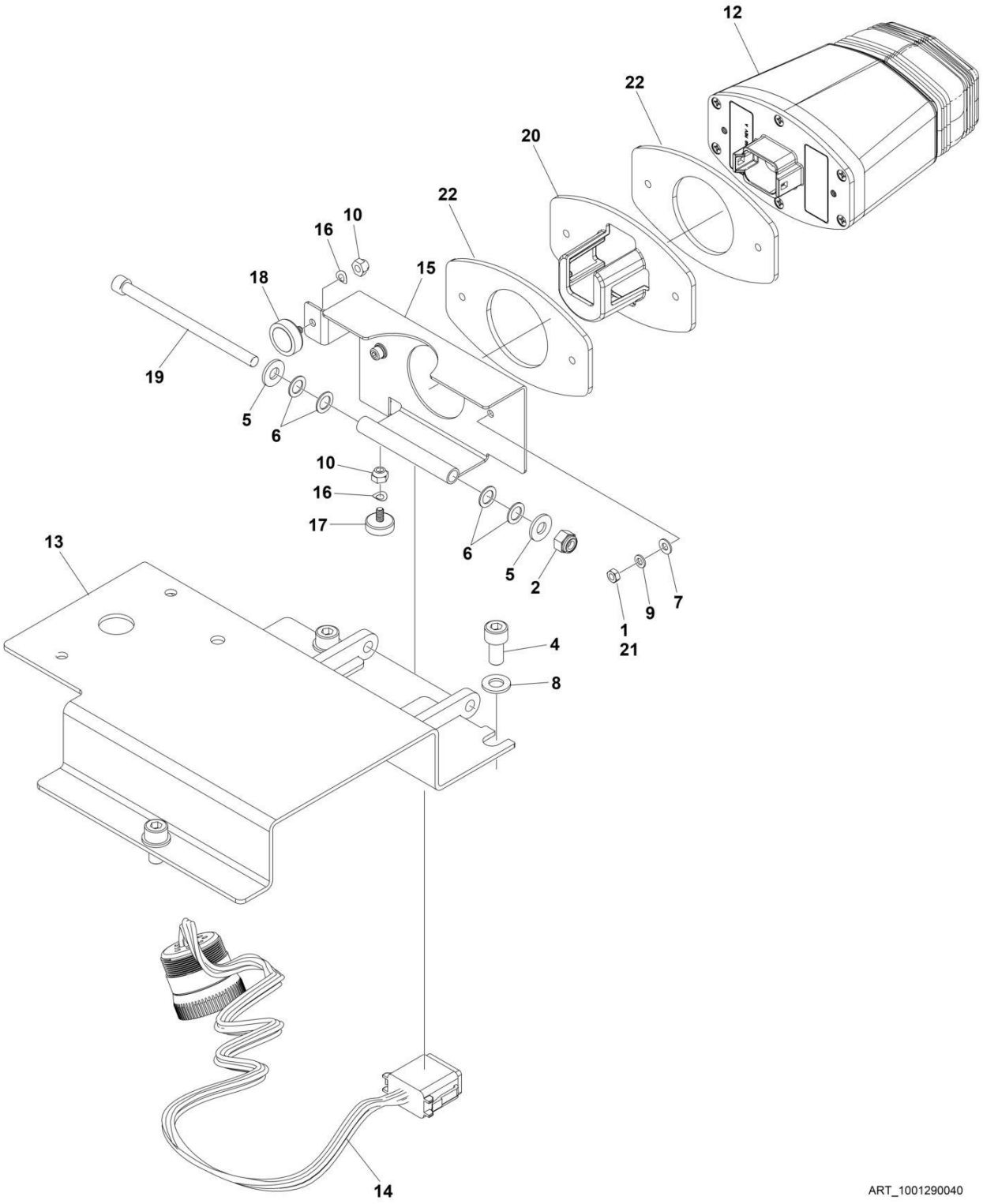

FIGURE 10-30. CLEARSKY INSTALLATION

ITEM	PART NUMBER	QTY	DESCRIPTION	REV
	1001290040	Ref	CLEARSKY INSTALLATION	B
1	0100011	AR	Compound, Locking	
2	3300449	1	Nut 1/4	
4	4031907	3	Capscrew M8 x 16	
5	4711400	2	Washer 1/4	
6	4740428	4	Washer 5/16	
7	4811400	2	Washer M4	
8	4811900	3	Washer M8	
9	4831400	2	Washer, M4	
10	8310410	2	Nut #8	
11	1001146588	AR	Tie-Strap (Not Shown)	
12	1001280661	1	Module, ClearSky	
13	1001286599	1	Bracket, ClearSky Mounting	
14	1001286941	1	Harness, ClearSky (See Separate Breakdown in this Section)	
15	1001289060	1	Mount, ClearSky Pivot	
16	1001289299	2	Washer #8	
17	1001289300	1	Magnet, Studded (16mm Diameter)	
18	1001289301	1	Magnet, Studded (20mm Diameter)	
19	1001289647	1	Capscrew 1/4 x 4	
20	1001289648	1	Plate, Anti-Tamper	
21	3290401	2	Nut, M4	
22	1001291056	2	Gasket, ClearSky CS550	

FIGURE 10-31. CLEARSKY HARNESS

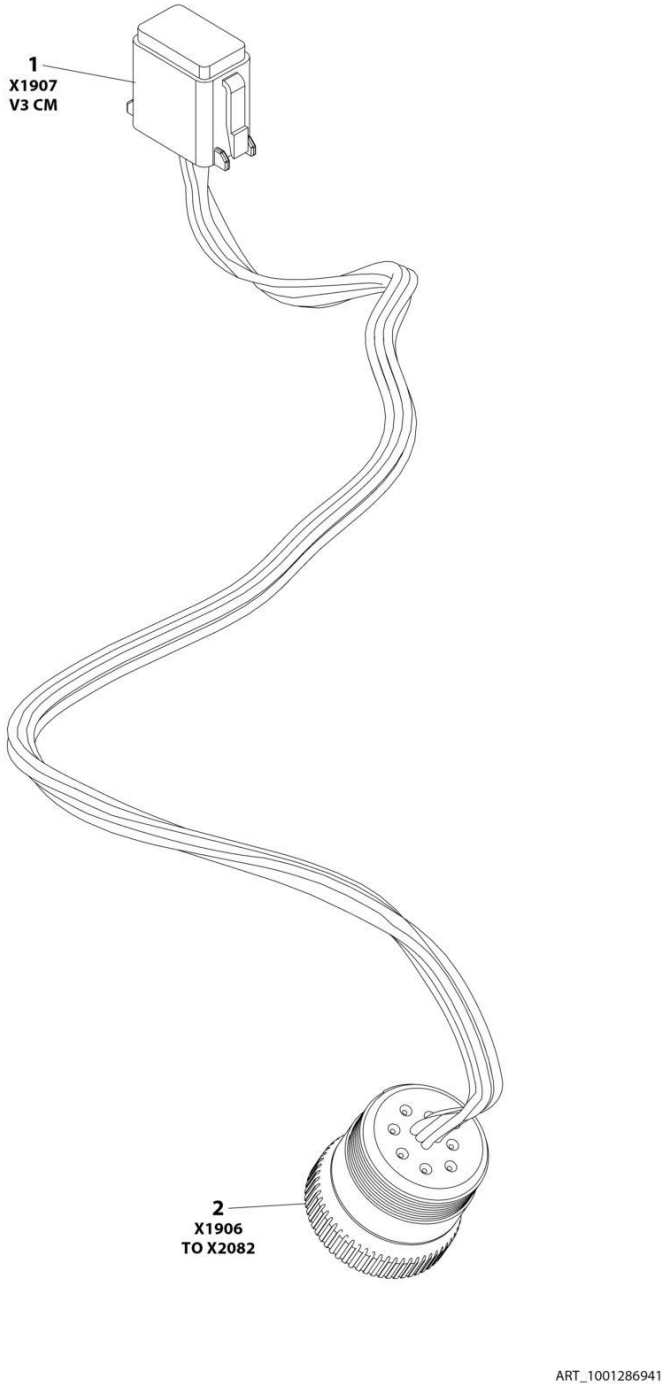

FIGURE 10-31. CLEARSKY HARNESS

ITEM	PART NUMBER	QTY	DESCRIPTION	REV
	1001286941	Ref	CLEARSKY HARNESS	A
1	4460930	1	Connector	
1	4460465	8	Socket	
2	1001112796	1	Connector	
2	4460465	8	Socket	
2	4460466	1	Plug	

FIGURE 10-32. COLD WEATHER PACKAGE INSTALLATION (ARCTIC)

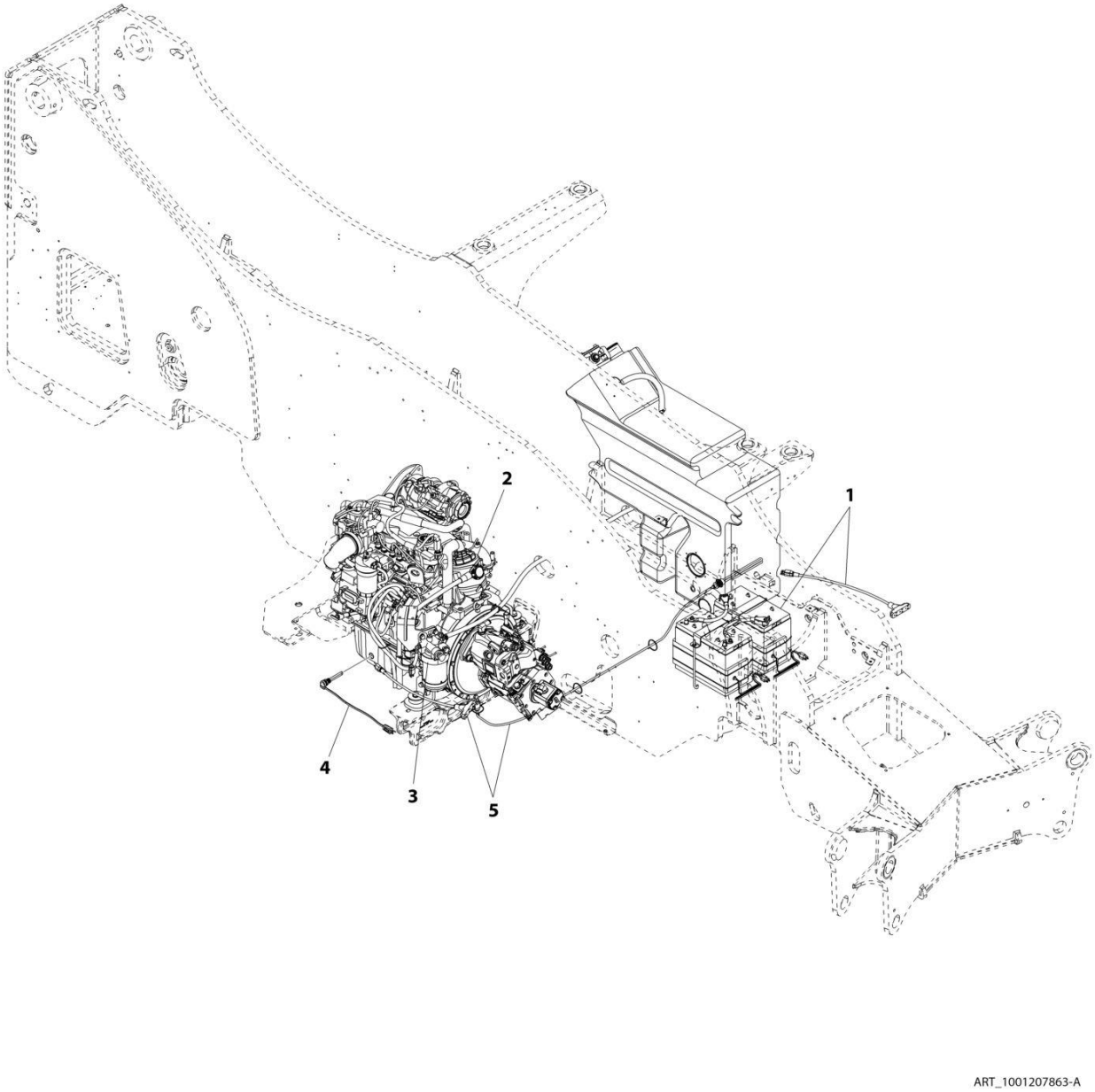

FIGURE 10-32. COLD WEATHER PACKAGE INSTALLATION (ARCTIC)

ITEM	PART NUMBER	QTY	DESCRIPTION	REV
	1001207863	Ref	Arctic Weather Package Installation	A
1	1001195582	Ref	Arctic Batteries Installation (See Separate Breakdown in this Section)	
2	1001246882	Ref	Breather Tube Heater Installation (See Separate Breakdown in Engine and Attaching Parts Section)	
3	1001247501	Ref	Fuel Filter Heater Installation (See Separate Breakdown in this Section)	
4	1001247528	Ref	Oil Pan Heater Installation (See Separate Breakdown in this Section)	
5	1001247917	Ref	Hydraulic Tank Heater Installation (See Separate Breakdown in this Section)	

FIGURE 10-33. EMERGENCY STOP EXTERNAL INSTALLATION

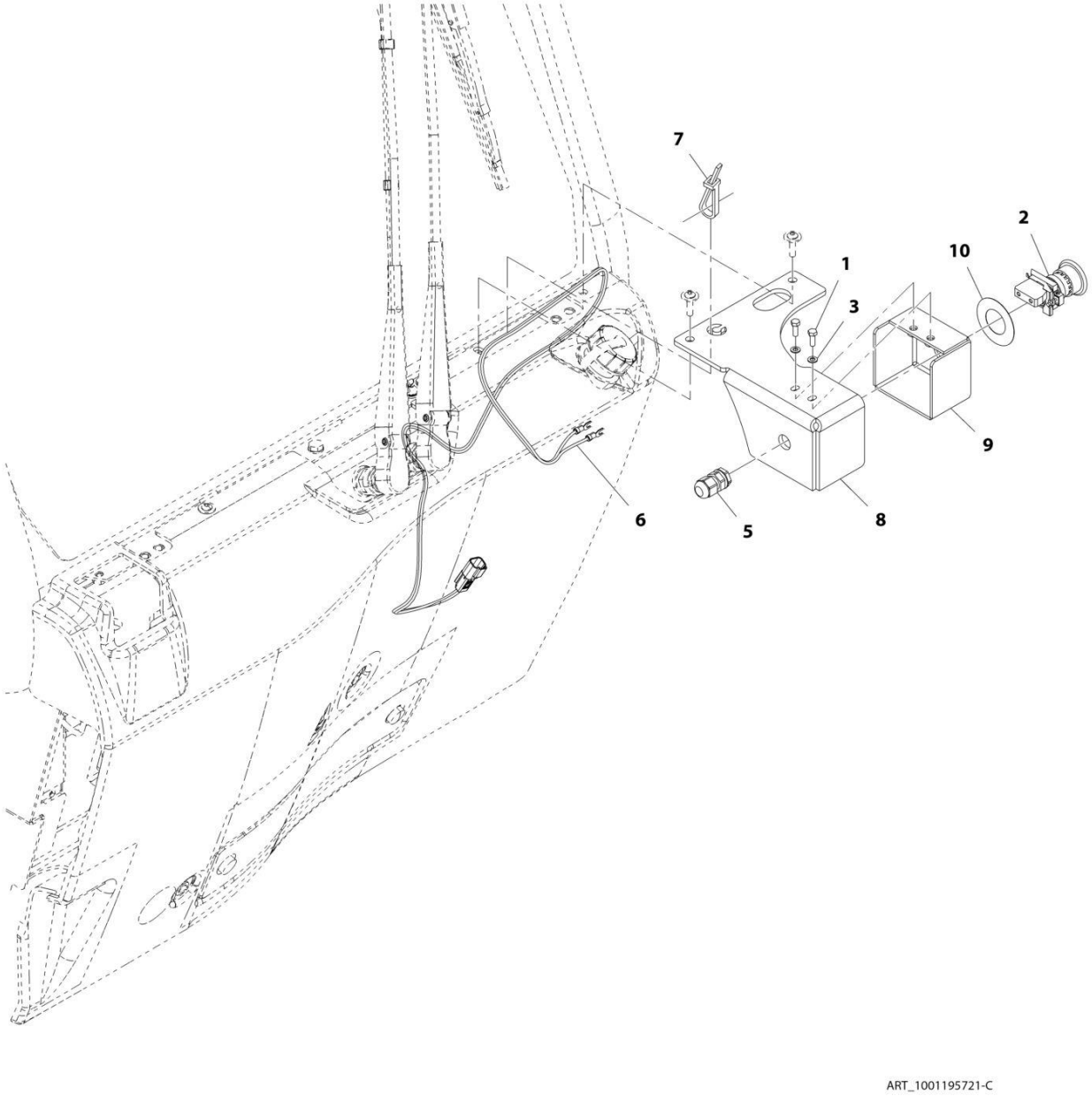

FIGURE 10-33. EMERGENCY STOP EXTERNAL INSTALLATION

ITEM	PART NUMBER	QTY	DESCRIPTION	REV
	1001195721	Ref	Emergency Stop External Installation	C
1	0760507	2	Bolt, M5X14	
2	4360475	1	Switch, E-Stop	
3	4811600	2	Washer, M5	
5	4461000	1	Connector	
6	1001217320	1	Harness, External EMS	
7	1001008559	1	Strap, Tie	
8	1001220859	1	Bracket	
9	1001220861	1	Shield	
10	1704260	1	Decal, EMS	

FIGURE 10-34. ENGINE BAY ELECTRICAL INSTALLATION (2733)

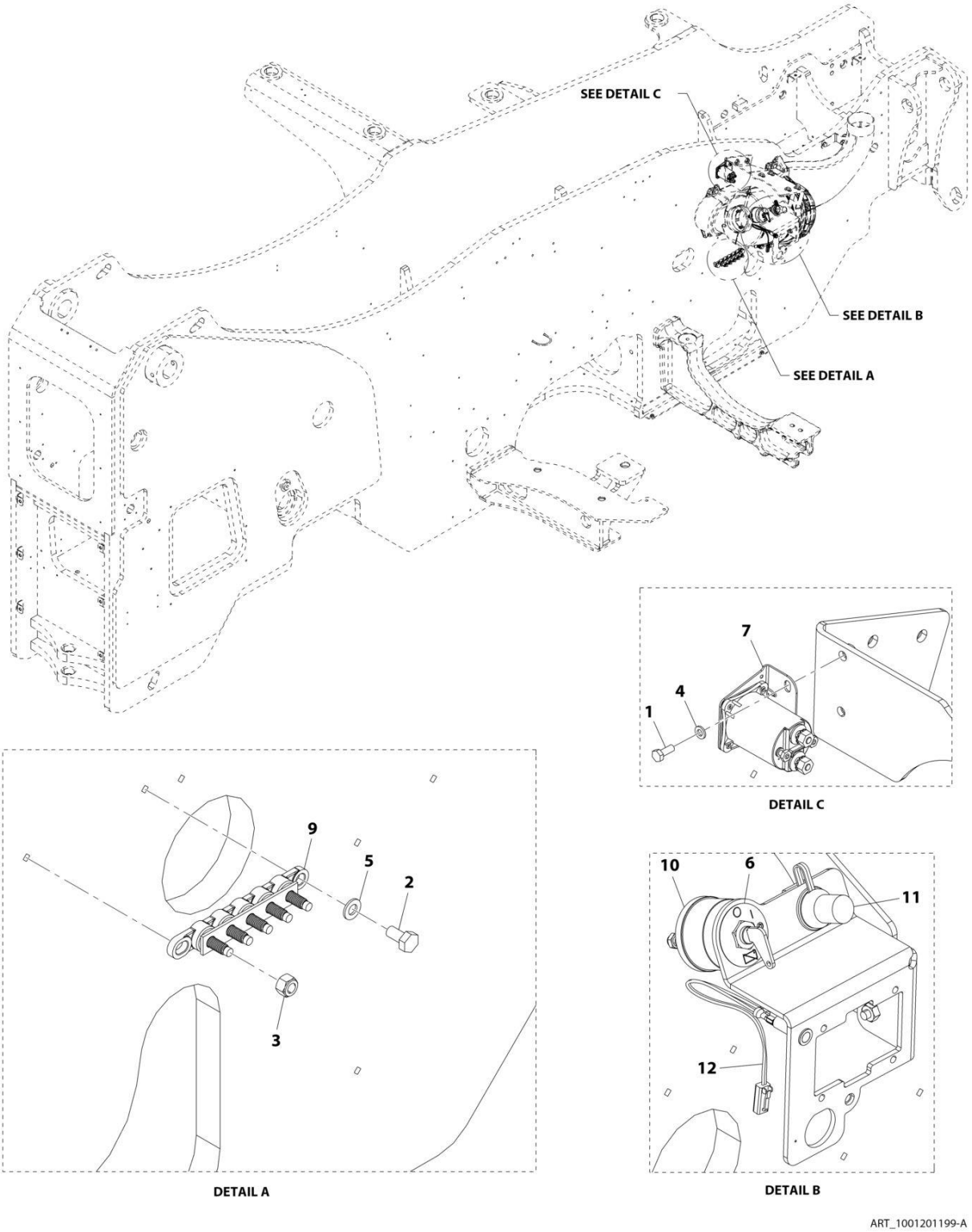

FIGURE 10-34. ENGINE BAY ELECTRICAL INSTALLATION (2733)

ITEM	PART NUMBER	QTY	DESCRIPTION	REV
	1001201199	Ref	Engine Bay Electrical Installation	A
1	0760608	2	Bolt, M6X16	
2	0761010	2	Bolt, M10X20	
3	3291005	5	Nut, lock M10X1.5	
4	4811700	2	Washer, M6	
5	4812000	2	Washer, M10	
6	1001008540	1	Plate, Battery	
7	1001117308	1	Relay, 200 Amp	
9	1001181128	1	Bussbar	
10	1001192142	1	Switch, Disconnect	
11	1001193993	1	Terminal, Battery	
12	1001232288	1	Harness, DEF Purge Light (See Separate Breakdown in this Section)	

FIGURE 10-35. ENGINE BAY ELECTRICAL INSTALLATION (12010)

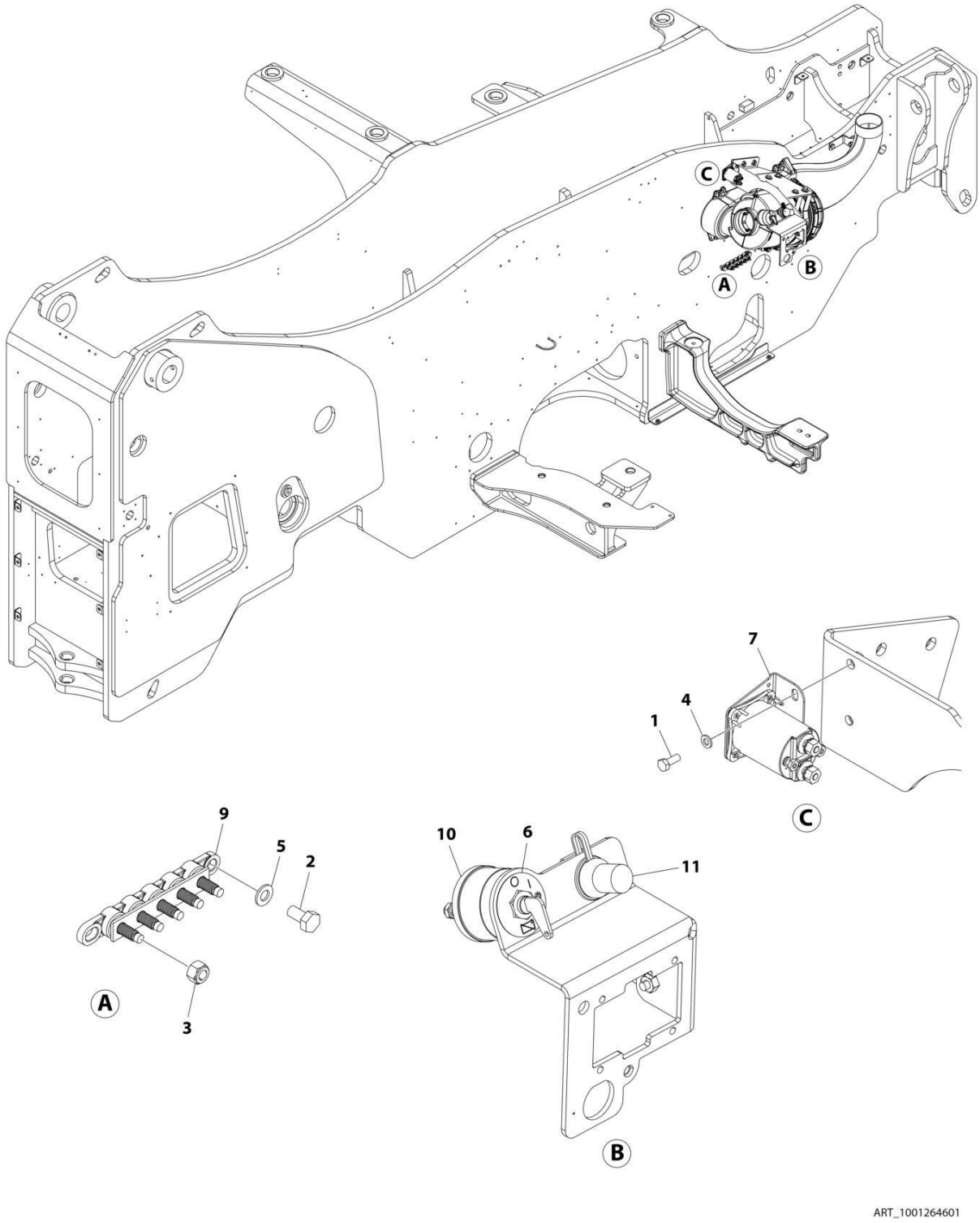

FIGURE 10-35. ENGINE BAY ELECTRICAL INSTALLATION (12010)

ITEM	PART NUMBER	QTY	DESCRIPTION	REV
	1001264601	Ref	ENGINE BAY ELECTRICAL INSTALLATION	A
1	0760608	2	Bolt M6 x 16	
2	0761010	2	Bolt M10 x 20	
3	3291005	5	Nut M10	
4	4811700	2	Washer M6	
5	4812000	2	Washer M10	
6	1001008540	1	Plate, Battery	
7	1001117308	1	Relay, 200 Amp	
9	1001181128	1	Bussbar	
10	1001192142	1	Switch, Disconnect	
11	1001193993	1	Terminal, Battery	

FIGURE 10-36. ENGINE BAY WIRING INSTALLATION (2733)

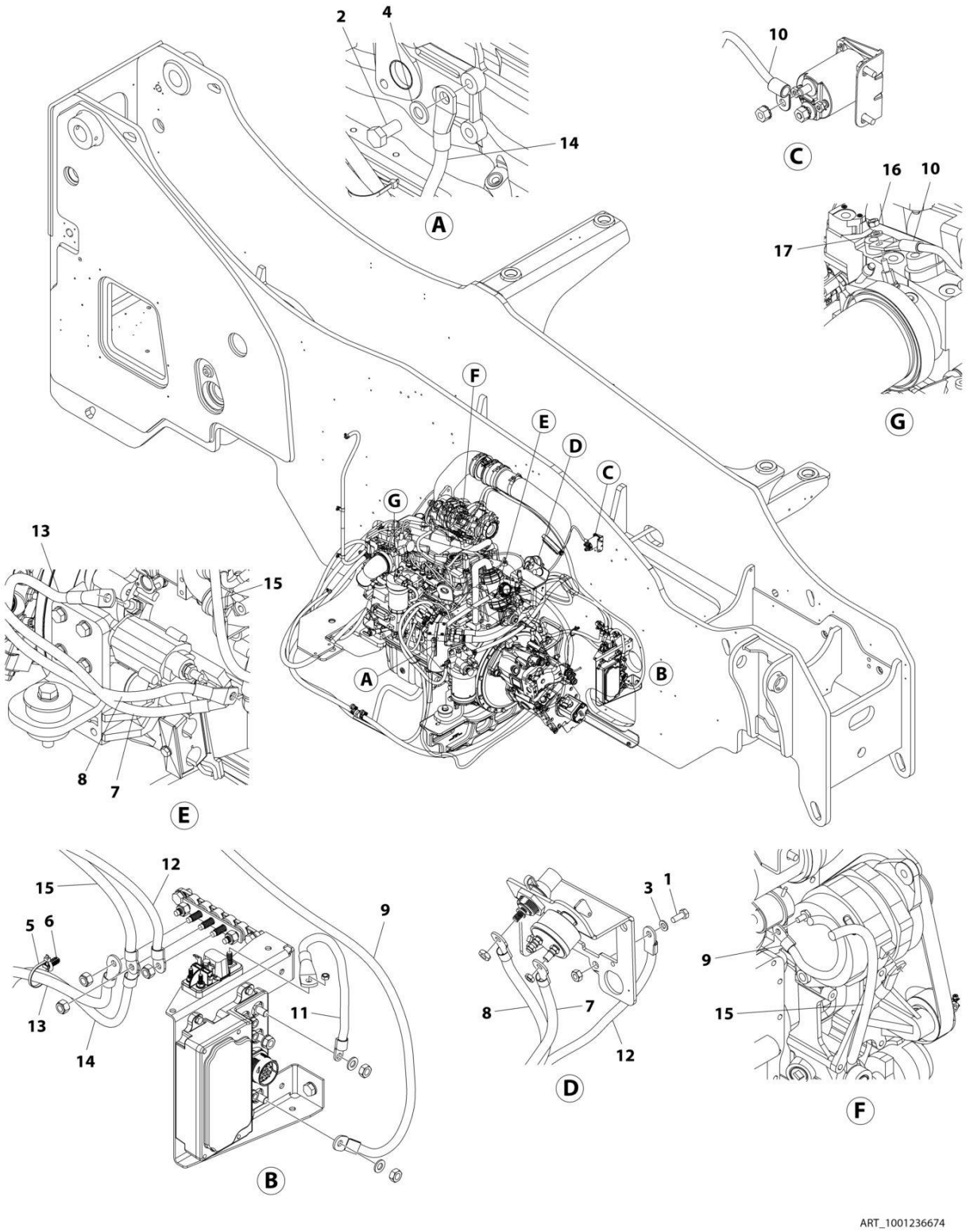

FIGURE 10-36. ENGINE BAY WIRING INSTALLATION (2733)

ITEM	PART NUMBER	QTY	DESCRIPTION	REV
	1001236674	Ref	ENGINE BAY WIRING INSTALLATION	C
1	0760810	1	Bolt M8 x 20	
2	0761212	1	Bolt M12 x 25	
3	4811900	1	Washer M8	
4	4812100	1	Washer M12	
5	1001008559	1	Strap, Cable	
6	1001202986	1	Strap Push Mount	
7	1001239061	1	Cable, Starter to Battery Disconnect	
8	1001239062	1	Cable, Starter to Remote B+	
9	1001239125	1	Cable, PDM to ALT+	
10	1001239126	1	Cable, Grid Heater	
11	1001239127	1	Cable, PDM to Power Fuse Module	
12	1001239186	1	Cable, Ground Buss to Remote Ground	
13	1001239187	1	Cable, Starter Ground	
14	1001239188	1	Cable, Engine Ground	
15	1001242109	1	Cable, Alt Ground	
16	3290601	1	Nut M6	
17	4811700	1	Washer M6	

FIGURE 10-37. ENGINE BAY WIRING INSTALLATION (12010)

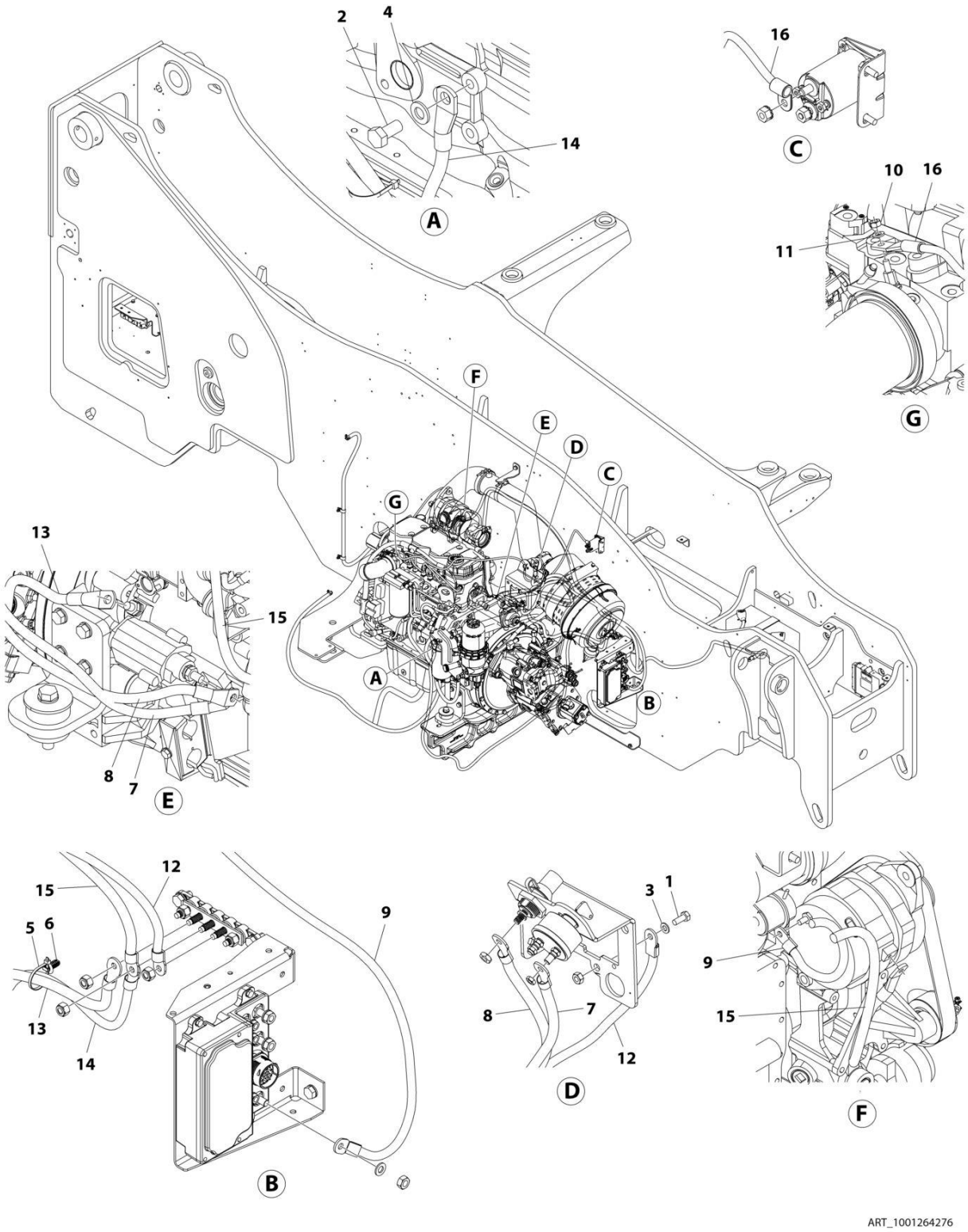

FIGURE 10-37. ENGINE BAY WIRING INSTALLATION (12010)

ITEM	PART NUMBER	QTY	DESCRIPTION	REV
	1001264276	Ref	ENGINE BAY WIRING INSTALLATION	B
1	0760810	1	Bolt M8 x 20	
2	0761212	1	Bolt M12 x 25	
3	4811900	1	Washer M8	
4	4812100	1	Washer M12	
5	1001008559	1	Tie-Strap	
6	1001202986	1	Strap Push Mount	
7	1001239061	1	Cable, Starter to Battery Disconnect	
8	1001239062	1	Cable, Starter to Remote B+	
9	1001239125	1	Cable, PDM to ALT+	
10	3290601	1	Nut M6	
11	4811700	1	Washer M6	
12	1001239186	1	Cable, Ground Buss to Remote Ground	
13	1001239187	1	Cable, Starter Ground	
14	1001239188	1	Cable, Engine Ground	
15	1001279501	1	Cable, Alt Ground	
16	1001239126	1	Cable, Grid Heater	

FIGURE 10-38. ENGINE - ENGINE HARNESS (CUMMINS)

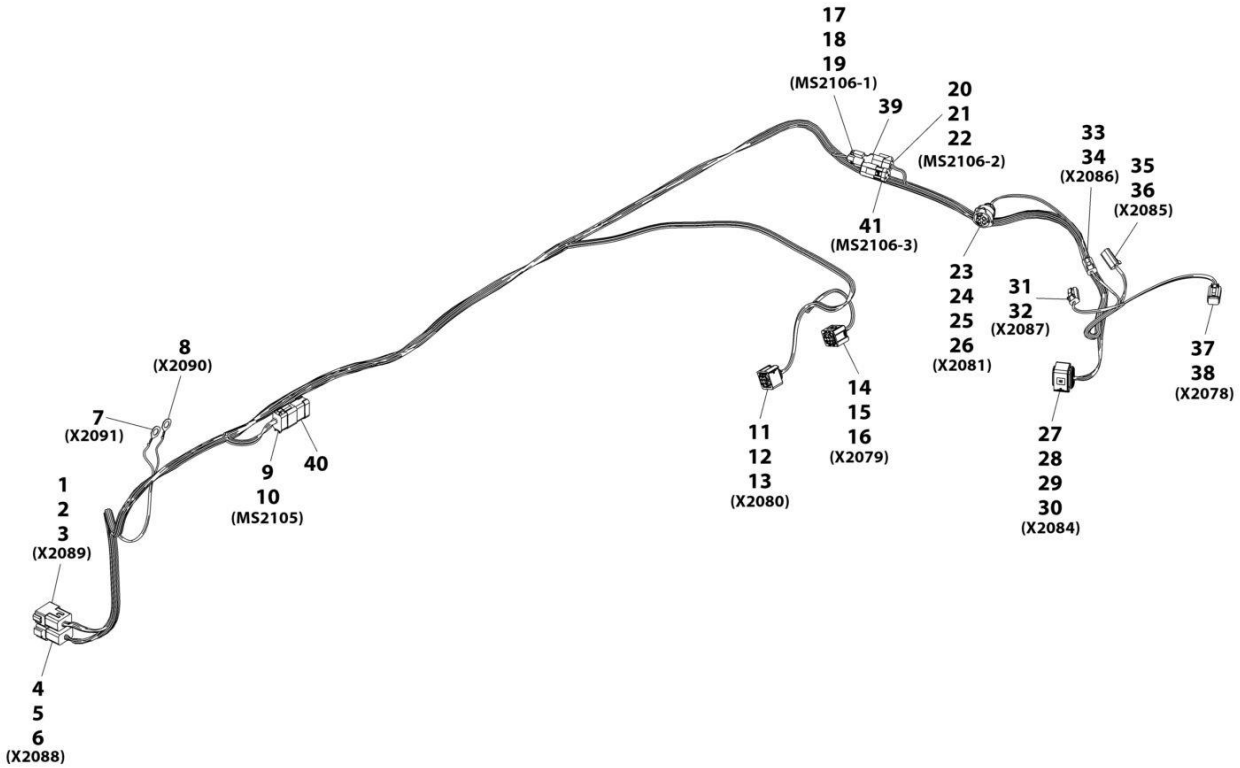

ART_1001239954-B

FIGURE 10-38. ENGINE - ENGINE HARNESS (CUMMINS)

ITEM	PART NUMBER	QTY	DESCRIPTION	REV
	1001239954	Ref	Cummins Engine Harness	B
1	4460970	1	Connector	
2	4460464	11	Terminal	
3	4460466	1	Plug	
4	4460950	1	Connector	
5	4460464	10	Terminal	
6	4460466	2	Plug	
7	1001187077	1	Terminal Ring	
8	1001187077	1	Terminal Ring	
9	4460930	1	Connector	
10	4460465	8	Terminal	
11	1001176935	1	Connector	
12	1001166704	4	Terminal	
13	1001137578	4	Seal	
14	1001167528	1	Connector	
15	1001166704	4	Terminal	
16	1001137578	4	Seal	
17	1001116812	1	Connector	
18	4460944	2	Terminal	
19	4460466	1	Plug	
20	4460539	1	Connector	
21	4460944	2	Terminal	
22	4460466	1	Plug	
23	1001167620	1	Connector	
24	1001176004	2	Terminal	
25	1001167624	2	Plug	
26	1001176002	2	Seal	
27	1001165194	1	Connector	
28	1001126391	2	Plug	
29	1001166703	10	Terminal	
30	1001223459	10	Seal	
31	4460891	1	Connector	
32	4460465	2	Terminal	
33	4460891	1	Connector	
34	4460465	2	Terminal	
35	4460891	1	Connector	
36	4460465	2	Terminal	
37	4460884	1	Connector	
38	4460465	4	Terminal	
39	4460945	1	Terminal, 3 Way "T" Receptacle	
40	4460984	1	Plug	
41	1001116815	1	Connector, 3 Pin	

FIGURE 10-39. ENGINE - DEF PURGE LIGHT HARNESS

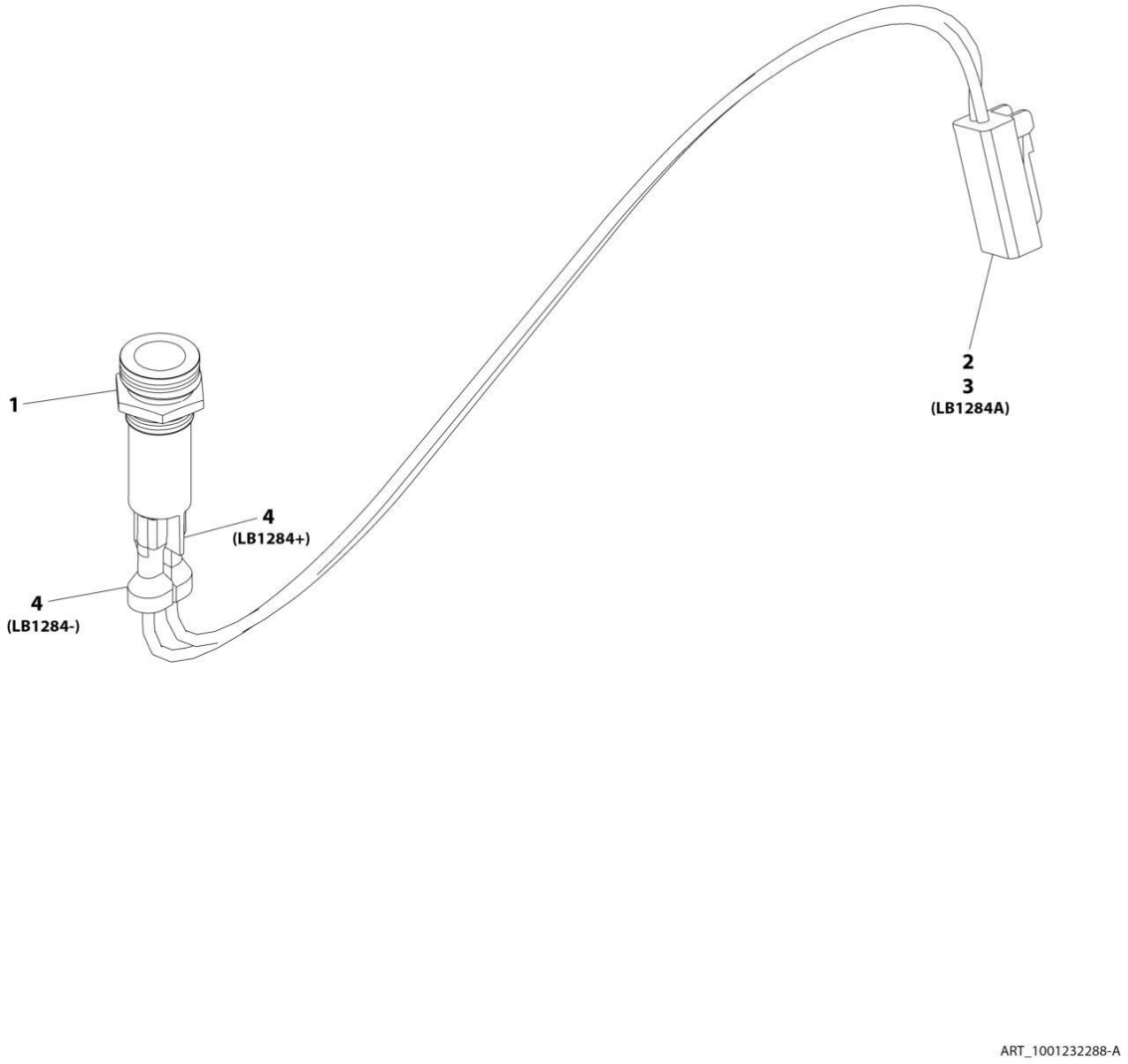

FIGURE 10-39. ENGINE - DEF PURGE LIGHT HARNESS

ITEM	PART NUMBER	QTY	DESCRIPTION	REV
	1001232288	Ref	DEF Purge Light Harness	A
1	1001169825	1	LED Lamp 12V	
2	4461290	1	Connector	
3	1001126008	2	Terminal	
4	8220108	2	Connector	

FIGURE 10-40. ENGINE WIRING INSTALLATION (2733)

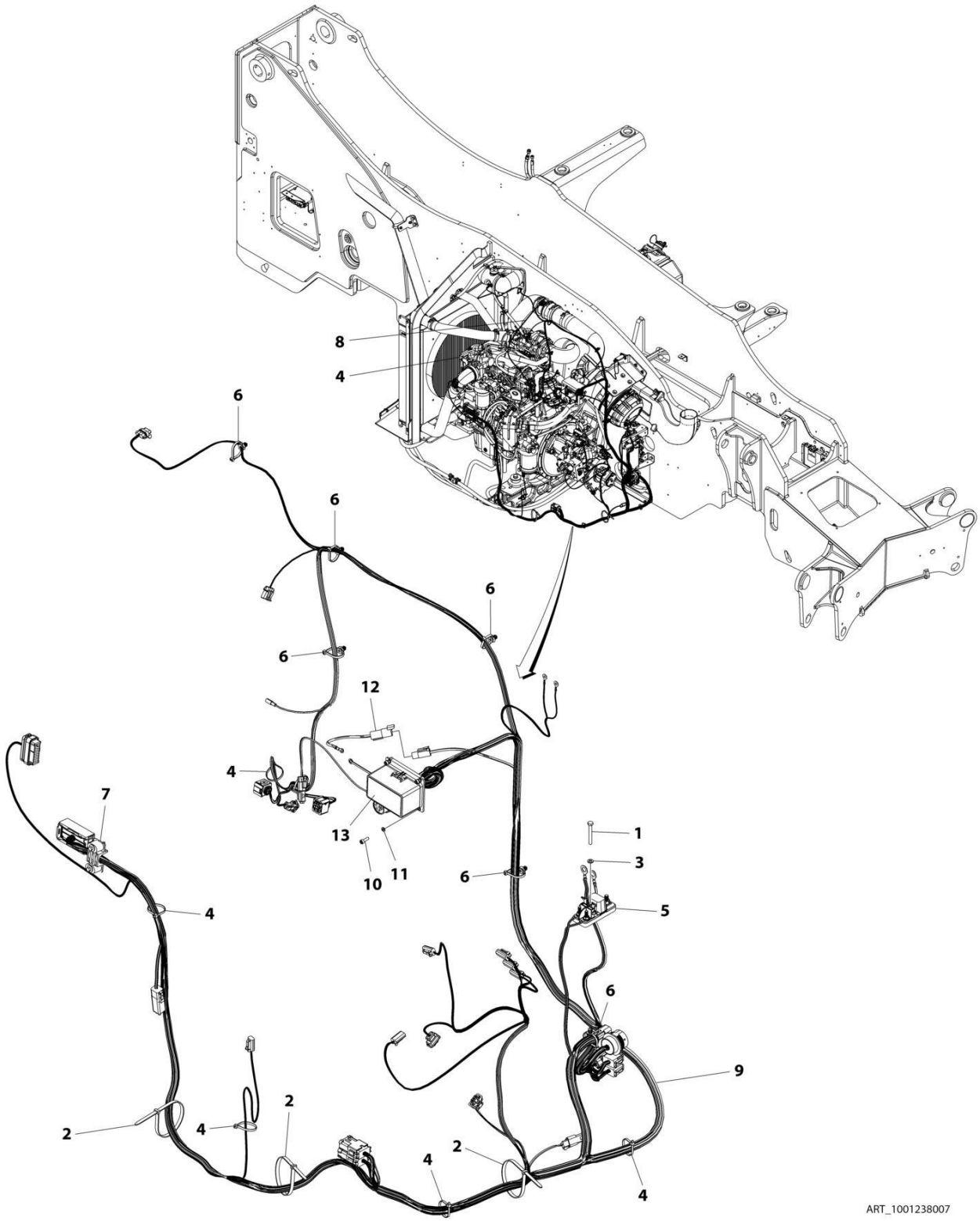

FIGURE 10-40. ENGINE WIRING INSTALLATION (2733)

ITEM	PART NUMBER	QTY	DESCRIPTION	REV
	1001238007	Ref	Engine Wiring Installation	C
1	0700618	1	Bolt, M6X50	
2	1062255	3	Strap, Tie	
3	4811700	1	Washer, M6	
4	1001008559	9	Strap	
5	1001131177	1	Fuse	
6	1001146588	6	Strap, Cable Tie	
7	1001167646	1	Bracket	
8	1001184835	1	Harness, TBAP (See Separate Breakdown in this Section)	
9	1001239953	1	Harness, Engine (See Separate Breakdown in this Section)	
10	4031607	4	Bolt, M5X16	
11	4831600	4	Washer, Lock M5	
12	1001255725	1	Harness, Starter Solenoid Jumper	
13	1001250171	1	Decal, Fuse	

FIGURE 10-41. ENGINE WIRING INSTALLATION (12010)

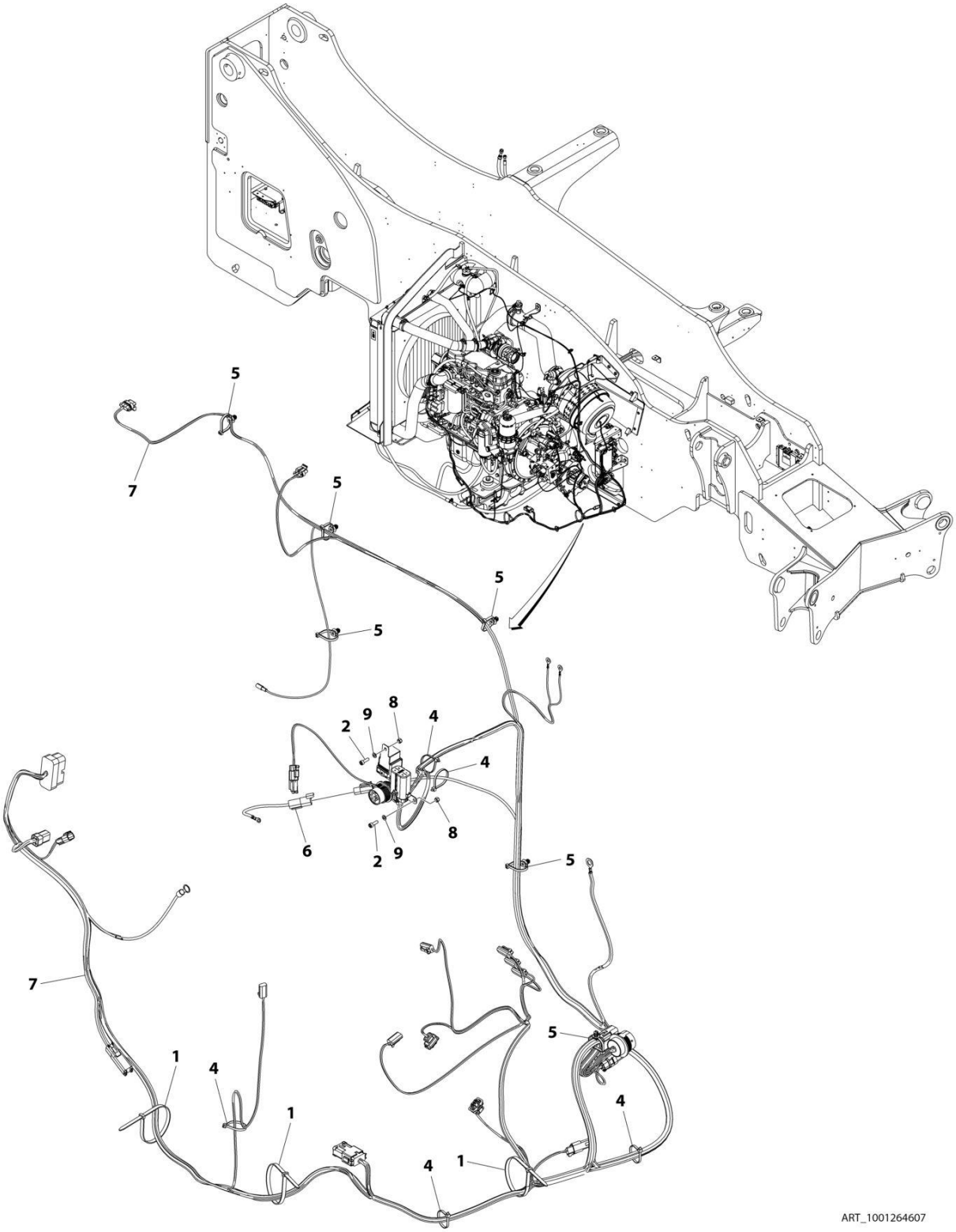

FIGURE 10-41. ENGINE WIRING INSTALLATION (12010)

ITEM	PART NUMBER	QTY	DESCRIPTION	REV
	1001264607	Ref	ENGINE WIRING INSTALLATION	B
1	1062255	3	Tie-Strap	
2	4031607	2	Bolt M5 x 16	
4	1001008559	6	Tie-Strap	
5	1001146588	6	Tie-Strap	
6	1001255725	1	Harness, Starter Solenoid Jumper	
7	1001263770	1	Harness, Engine (See Separate Breakdown in this Section)	
8	3290505	2	Nut M5	
9	4811600	2	Washer M5	

FIGURE 10-42. ENGINE HARNESS (CUMMINS) - 2733

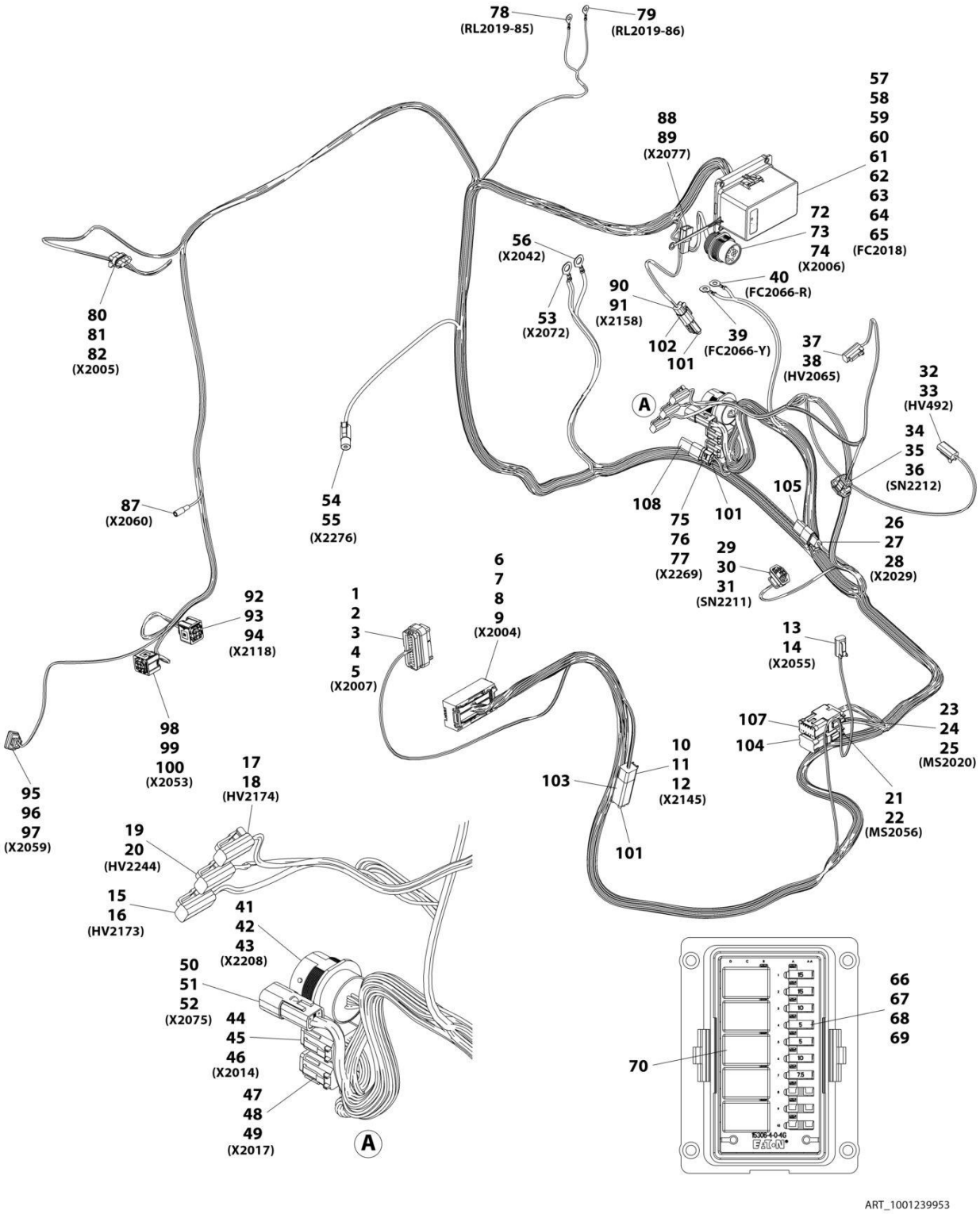

FIGURE 10-42. ENGINE HARNESS (CUMMINS) - 2733

ITEM	PART NUMBER	QTY	DESCRIPTION	REV
	1001239953	Ref	ENGINE HARNESS (CUMMINS)	D
1	1001167641	1	Connector	
2	1001195782	7	Plug	
3	1001195781	14	Plug	
4	1001125085	2	Terminal	
5	1001125089	1	Terminal	
6	1001167641	1	Connector	
7	1001167648	10	Terminal	
8	1001167650	55	Plug	
9	1001167649	31	Terminal	
10	4460894	1	Connector	
11	4460465	5	Terminal	
12	4460466	1	Plug	
13	4460891	1	Connector	
14	4460465	2	Terminal	
15	4460891	1	Connector	
16	4460465	2	Terminal	
17	4460891	1	Connector	
18	4460465	2	Terminal	
19	1001167641	1	Connector	
20	4460465	2	Terminal	
21	4460930	1	Connector	
22	4460465	8	Terminal	
23	4460933	1	Connector	
24	4460465	10	Terminal	
25	4460466	2	Plug	
26	4461095	1	Connector	
27	4460944	2	Terminal	
28	4460466	1	Plug	
29	1001126483	1	Connector	
30	1001167634	3	Terminal	
31	1001126485	3	Seal	
32	4460891	1	Connector	
33	4460465	2	Terminal	
34	1001126483	1	Connector	
35	1001167634	3	Terminal	
36	1001167634	3	Seal	
37	4460891	1	Connector	
38	4460465	2	Terminal	
39	1001207171	1	Ring Terminal	
40	1001207171	1	Ring Terminal	
41	1001148106	1	Connector	
42	4460464	20	Terminal	
43	4460466	3	Plug	
44	1001207171	1	Connector	
45	4460465	11	Terminal	
46	4460466	1	Plug	
47	4460836	1	Connector	
48	4460465	10	Terminal	
49	4460466	2	Plug	

ITEM	PART NUMBER	QTY	DESCRIPTION	REV
50	1001116811	1	Connector	
51	4460508	3	Terminal	
52	1001150610	1	Terminal	
53	1001187079	1	Ring, Terminal	
54	4461261	1	Connector	
55	1001150611	1	Terminal	
56	1001187079	1	Ring, Terminal	
57	1001167616	1	Connector	
58	4460748	10	Plug	
59	1001190921	1	Seal, Foam Fuse Box	
60	1001116725	1	Terminal	
61	8220098	8	Terminal	
62	8220097	26	Terminal	
63	80963067	2	Seal	
64	4460789	9	Seal	
65	4460458	25	Seal	
66	8229244	2	Fuse, 15amp	
67	80983191	2	Fuse, 10amp	
68	8229242	1	Fuse, 5amp	
69	8229243	1	Fuse, 7.5amp	
70	1001205172	1	Relay, 35amp	
72	1001112612	1	Connector	
73	4460464	4	Terminal	
74	4460466	5	Plug	
75	1001116812	1	Connector	
76	4460465	1	Terminal	
77	4460466	1	Plug	
78	1001187070	1	Ring, Terminal	
79	1001187070	1	Ring, Terminal	
80	1001125027	1	Connector	
81	8220124	3	Terminal	
82	4460608	3	Seal	
87	1001246391	1	Connector	
88	1001153612	1	Connector	
89	1001126011	2	Terminal	
90	4460891	1	Connector	
91	4460465	2	Terminal	
92	1001176935	1	Connector	
93	1001166704	4	Terminal	
94	4461006	4	Seal	
95	1001126487	1	Connector	
96	1001167656	2	Terminal	
97	1001167657	2	Seal	
98	1001167528	1	Connector	
99	1001166704	4	Terminal	
100	4461006	4	Seal	
101	4460466	11	Terminal	
102	4460897	1	Connector	
103	4460899	1	Terminal	
104	4460984	1	Plug	
105	4461070	1	Connector	

ITEM	PART NUMBER	QTY	DESCRIPTION	REV
107	1001125677	1	Connector	
108	1001144147	1	Terminal	

FIGURE 10-43. ENGINE HARNESS (CUMMINS) - 12010

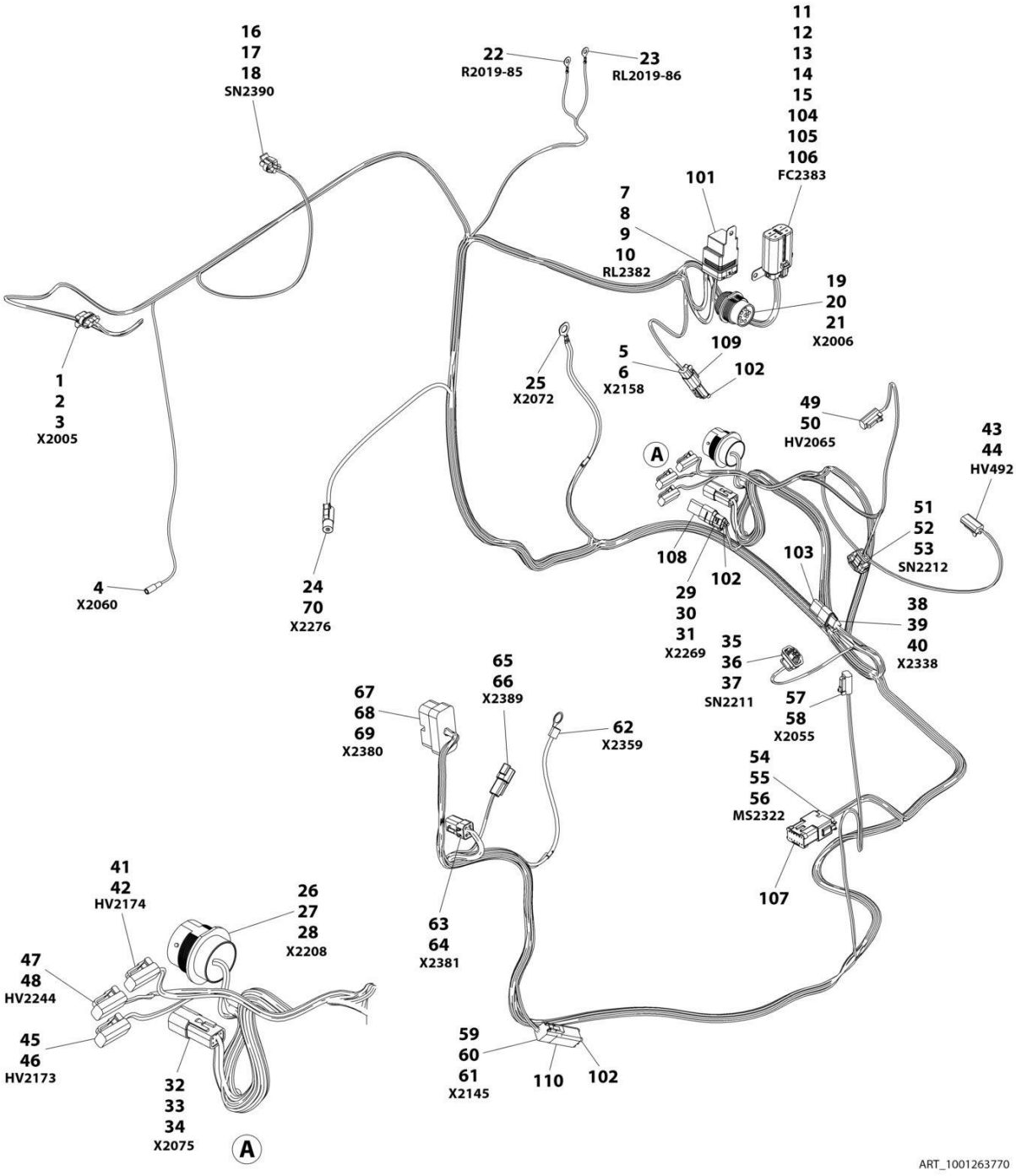

FIGURE 10-43. ENGINE HARNESS (CUMMINS) - 12010

ITEM	PART NUMBER	QTY	DESCRIPTION	REV
	1001263770	Ref	ENGINE HARNESS (CUMMINS)	B
1	1001125027	1	Connector, 3-Position	
2	8220124	3	Terminal	
3	4460608	3	Seal	
4	1001246391	1	Connector	
5	4460891	1	Connector, 2-Position	
6	4460465	2	Terminal	
7	1001231398	1	Connector, 5-Way	
8	1001231400	4	Terminal	
9	1001231406	1	Terminal	
10	1001231404	4	Seal	
11	1001184551	1	Connector	
12	4460746	5	Terminal	
13	1001116747	3	Terminal	
14	4460458	5	Seal	
15	4460789	3	Seal	
16	1001209097	1	Connector	
17	8220124	2	Terminal	
18	4460608	2	Seal	
19	1001112612	1	Connector	
20	4460464	4	Terminal	
21	4460466	5	Terminal	
22	1001187070	1	Terminal, Ring	
23	1001187070	1	Terminal, Ring	
24	4461261	1	Connector	
25	1001187079	1	Terminal, Ring	
26	1001148106	1	Connector	
27	4460464	21	Terminal	
28	4460464	2	Terminal	
29	1001116812	1	Connector	
30	4460465	2	Terminal	
31	4460466	1	Plug	
32	1001116811	1	Connector	
33	4460508	3	Terminal	
34	1001150610	1	Terminal	
35	1001126483	1	Connector, 3-Position	
36	1001167634	3	Terminal	
37	1001126485	3	Seal	
38	4461095	1	Connector	
39	4460944	2	Terminal	
40	4460466	1	Plug	
41	4460891	1	Connector, 2-Position	
42	4460465	2	Terminal	
43	4460891	1	Connector, 2-Position	
44	4460465	2	Terminal	
45	4460891	1	Connector, 2-Position	
46	4460465	2	Terminal	
47	4460891	1	Connector, 2-Position	
48	4460465	2	Terminal	
49	4460891	1	Connector, 2-Position	

ITEM	PART NUMBER	QTY	DESCRIPTION	REV
50	4460465	2	Terminal	
51	1001126483	1	Connector, 3-Position	
52	1001167634	3	Seal	
53	1001126485	3	Seal	
54	4460933	1	Connector	
55	4460465	10	Terminal	
56	4460466	2	Plug	
57	4460891	1	Connector, 2-Position	
58	4460465	2	Terminal	
59	4460894	1	Connector, 6-Position	
60	4460465	5	Terminal	
61	4460466	1	Plug	
62	8220029	1	Terminal	
63	1001116810	1	Connector	
64	4460509	4	Terminal	
65	4460897	1	Connector, 2-Position	
66	4460464	2	Terminal	
67	1001116821	1	Connector, 50-Position	
68	4460518	36	Plug	
69	1001126008	14	Terminal	
70	1001150611	1	Terminal	
101	3740080	1	Relay	
102	4460466	11	Plug	
103	4461070	1	Connector, 3-Position	
104	8229242	1	Fuse, 5amp	
105	8229243	1	Fuse, 7.5amp	
106	80983191	2	Fuse, 10amp	
107	1001125677	1	Connector	
108	1001144147	1	Terminal	
109	4460897	1	Connector, 2-Position	
110	4460899	1	Connector, 6-Position	

FIGURE 10-44. FRAME ELECTRICAL INSTALLATION

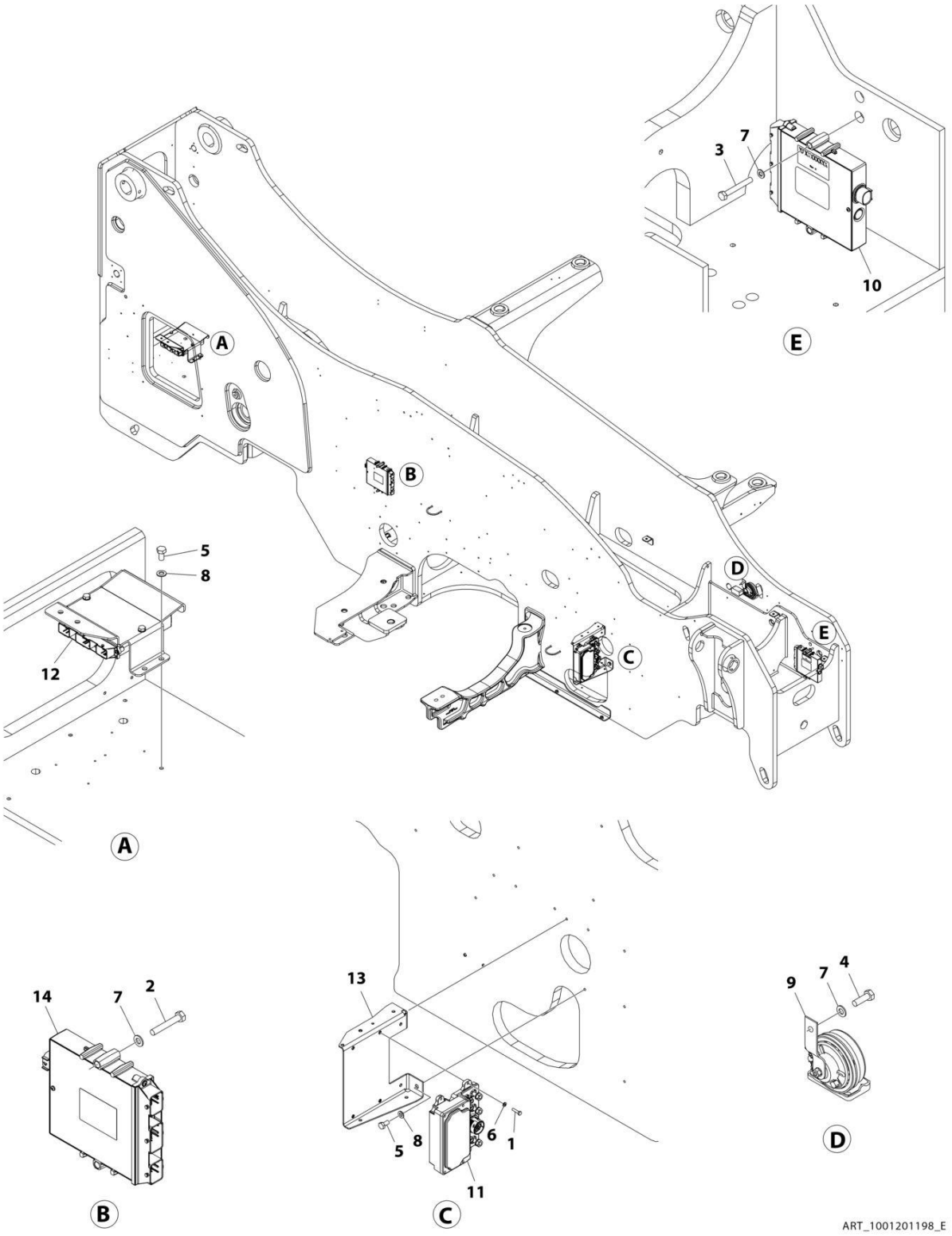

FIGURE 10-44. FRAME ELECTRICAL INSTALLATION

ITEM	PART NUMBER	QTY	DESCRIPTION	REV
	1001201198	Ref	FRAME ELECTRICAL INSTALLATION	E
1	0700612	4	Bolt M6 x 25	
2	0700818	2	Bolt M8 x 50	
3	0700820	2	Bolt M8 x 60	
4	0760812	1	Bolt M8 x 25	
5	0761010	4	Bolt M10 x 20	
6	4811700	4	Washer M6	
7	4811900	5	Washer M8	
8	4812000	4	Washer M10	
9	1001264995	1	Horn	
10	1001270467	1	Module, Front Frame	
11	1001164402	1	Box, Power Distribution Electrical (See Separate Breakdown in this Section)	
12	1001210770	1	Rear Frame Module Installation, (See Separate Breakdown in this Section)	
13	1001246929	1	Bracket	
14	1001270486	1	Module, Transmission	

FIGURE 10-45. FRAME - ELECTRICAL POWER DISTRIBUTION BOX

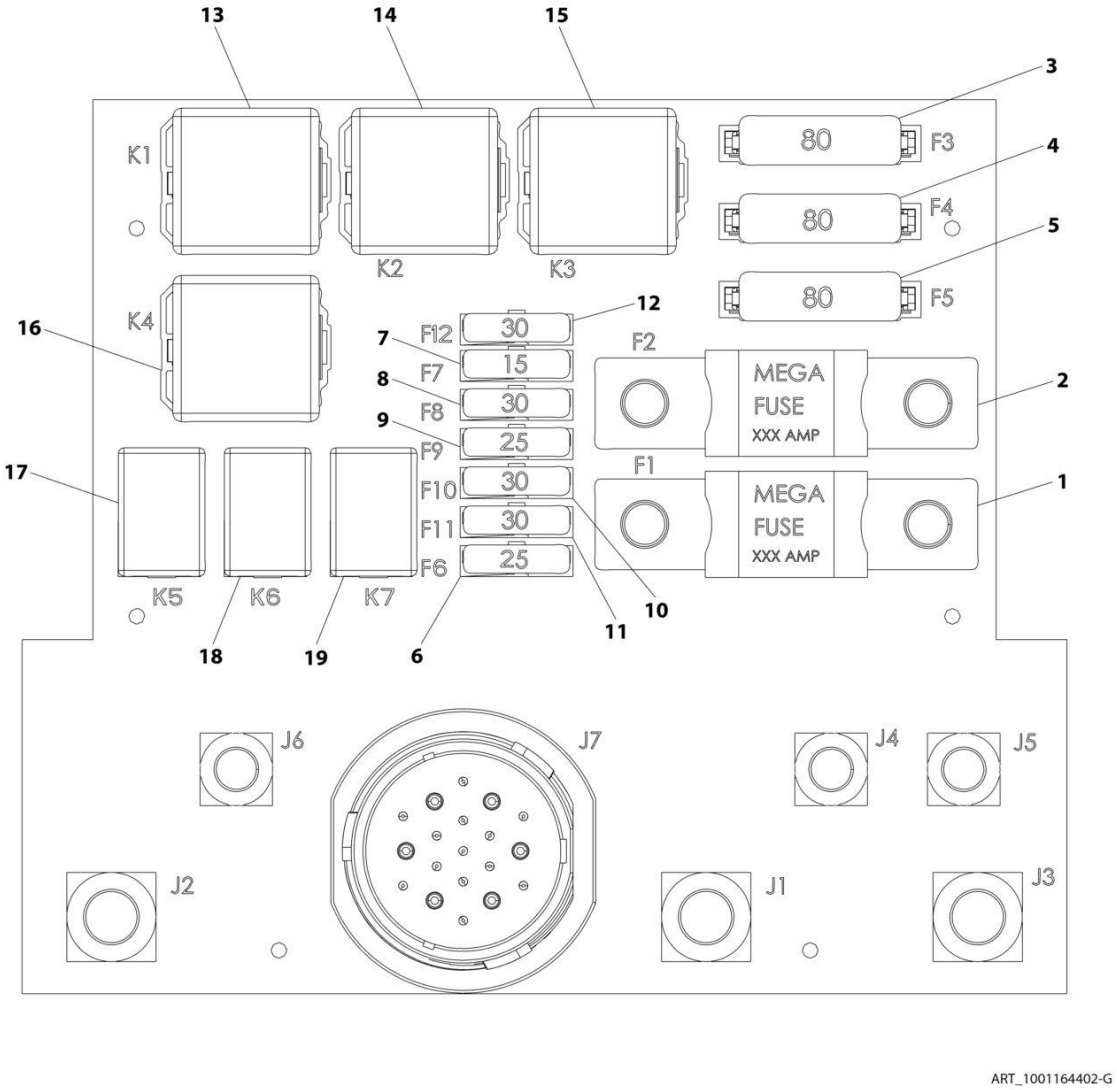

FIGURE 10-45. FRAME - ELECTRICAL POWER DISTRIBUTION BOX

ITEM	PART NUMBER	QTY	DESCRIPTION	REV
	1001164402	Ref	Power Distribution Electrical Box	G
1	1001095336	1	Fuse, 150AMP	
2	70026296	1	Fuse, 200AMP	
3	70026297	1	Fuse, 80AMP	
4	70026297	1	Fuse, 80AMP	
5	70026297	1	Fuse, 80AMP	
6	8229247	1	Fuse, 25AMP	
7	8229244	1	Fuse, 15AMP	
8	8229245	1	Fuse, 30AMP	
9	8229247	1	Fuse, 25AMP	
10	8229245	1	Fuse, 30AMP	
11	8229245	1	Fuse, 30AMP	
12	8229245	1	Fuse, 30AMP	
13	70026294	1	Fuse, 70AMP	
14	70026294	1	Fuse, 70AMP	
15	70026294	1	Fuse, 70AMP	
16	70026294	1	Fuse, 70AMP	
17	70026295	1	Fuse, 35AMP	
18	70026295	1	Fuse, 35AMP	
19	70026295	1	Fuse, 35AMP	

FIGURE 10-46. FRAME WIRING INSTALLATION

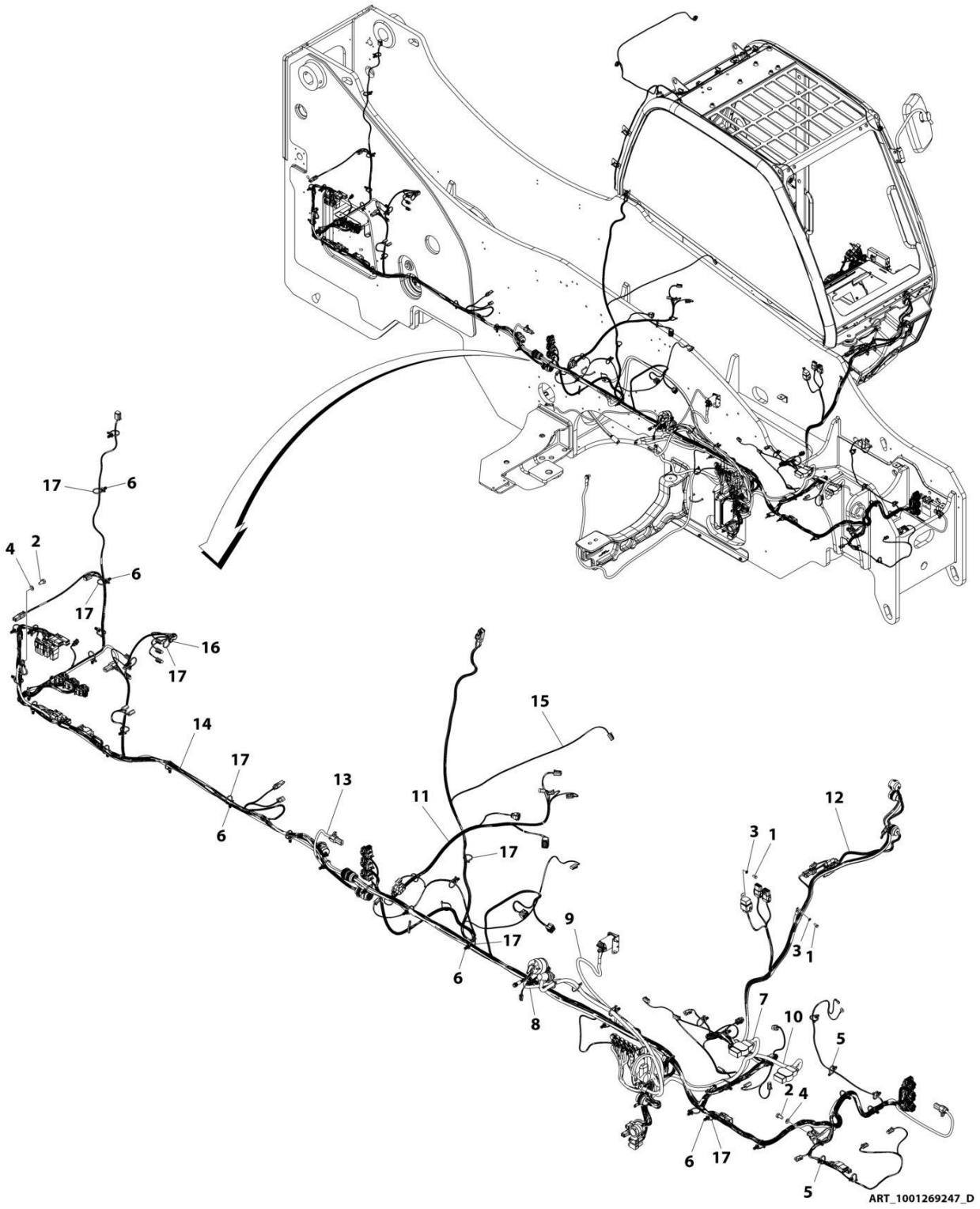

FIGURE 10-46. FRAME WIRING INSTALLATION

ITEM	PART NUMBER	QTY	DESCRIPTION	REV
	1001269247	Ref	FRAME WIRING INSTALLATION	D
1	0760607	2	Bolt M6 x 14	
2	0761010	2	Bolt M10 x 20	
3	4811700	2	Washer M6	
4	4812000	2	Washer M10	
5	1001146588	5	Tie-Strap	
6	1001202986	37	Strap Push Mount	
7	1001239059	1	Cable, Battery + to Battery Disconnect	
8	1001239060	1	Cable Battery Disconnect to PDM	
9	1001239128	1	Cable, PDM to Grid Heater	
10	1001239185	1	Cable, Battery Negative	
11	1001239954	1	Harness, Cummins Engine (See Separate Breakdown in this Section)	
12	1001243044	1	Harness, Cab Option (See Separate Breakdown in this Section)	
13	1001245231	1	Harness, Front Frame Power (See Separate Breakdown in this Section)	
14	1001259494	1	Harness, Rear Frame (See Separate Breakdown in this Section)	
15	1001282015	1	Harness, Front Frame (See Separate Breakdown in this Section)	
16	1001004723	2	Saddle	
17	1001008559	50	Tie-Strap	

FIGURE 10-47. FRAME WIRING INSTALLATION (12010)

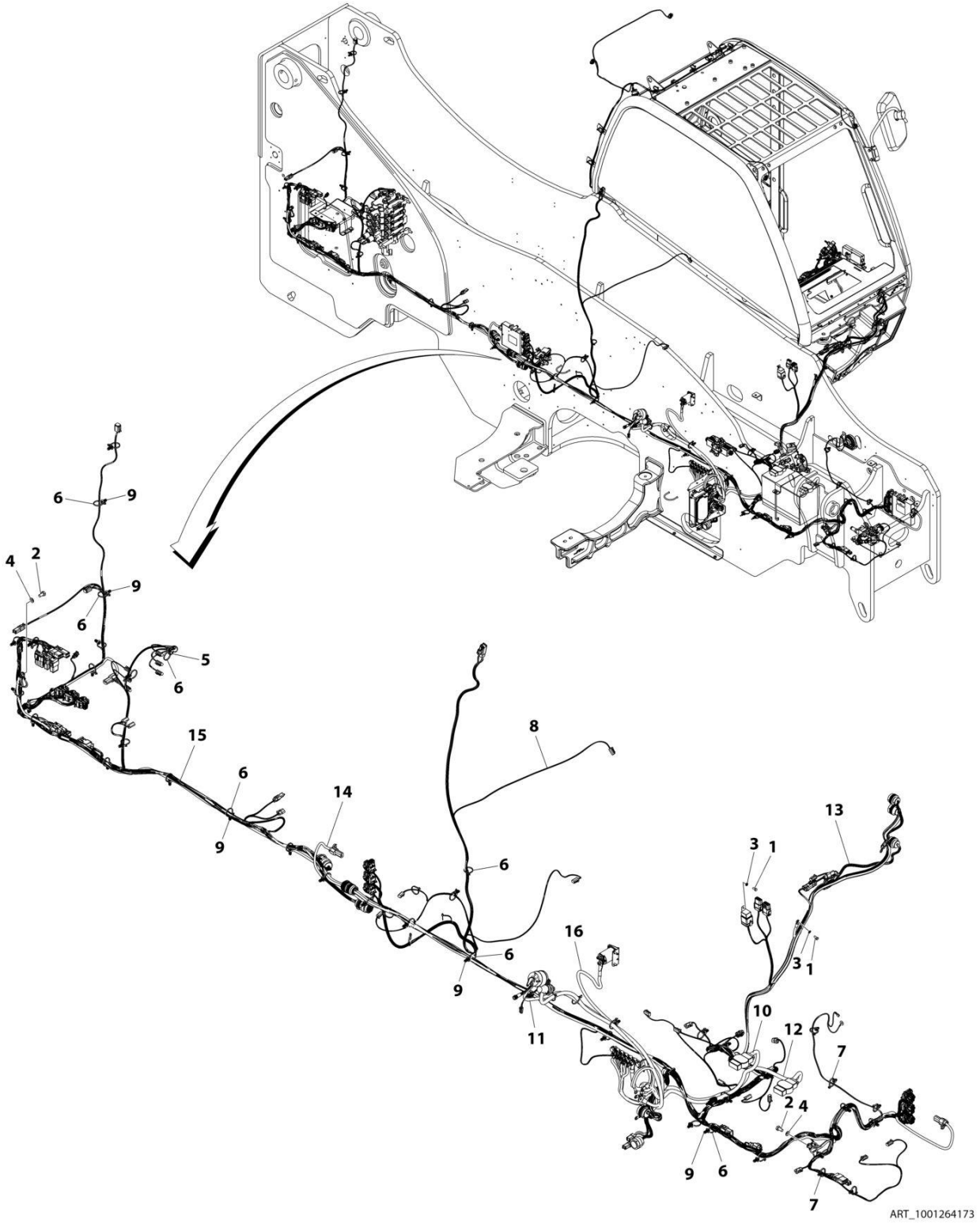

FIGURE 10-47. FRAME WIRING INSTALLATION (12010)

ITEM	PART NUMBER	QTY	DESCRIPTION	REV
	1001264173	Ref	FRAME WIRING INSTALLATION	D
1	0760607	2	Bolt M6 x 14	
2	0761010	2	Bolt M10 x 20	
3	4811700	2	Washer M6	
4	4812000	2	Washer M10	
5	1001004723	2	Saddle	
6	1001008559	47	Tie-Strap	
7	1001146588	5	Tie-Strap	
8	1001282015	1	Harness, Front Frame (See Separate Breakdown in this Section)	
9	1001202986	37	Strap Push Mount	
10	1001239059	1	Cable, Battery + to Battery Disconnect	
11	1001239060	1	Cable Battery Disconnect to PDM	
12	1001239185	1	Cable, Battery Negative	
13	1001243044	1	Harness, Cab Option (See Separate Breakdown in this Section)	
14	1001245231	1	Harness, Front Frame Power (See Separate Breakdown in this Section)	
15	1001259494	1	Harness, Rear Frame (See Separate Breakdown in this Section)	
16	1001264165	1	Cable, PDM to Grid Heater	

FIGURE 10-48. FRAME - FRONT FRAME POWER HARNESS

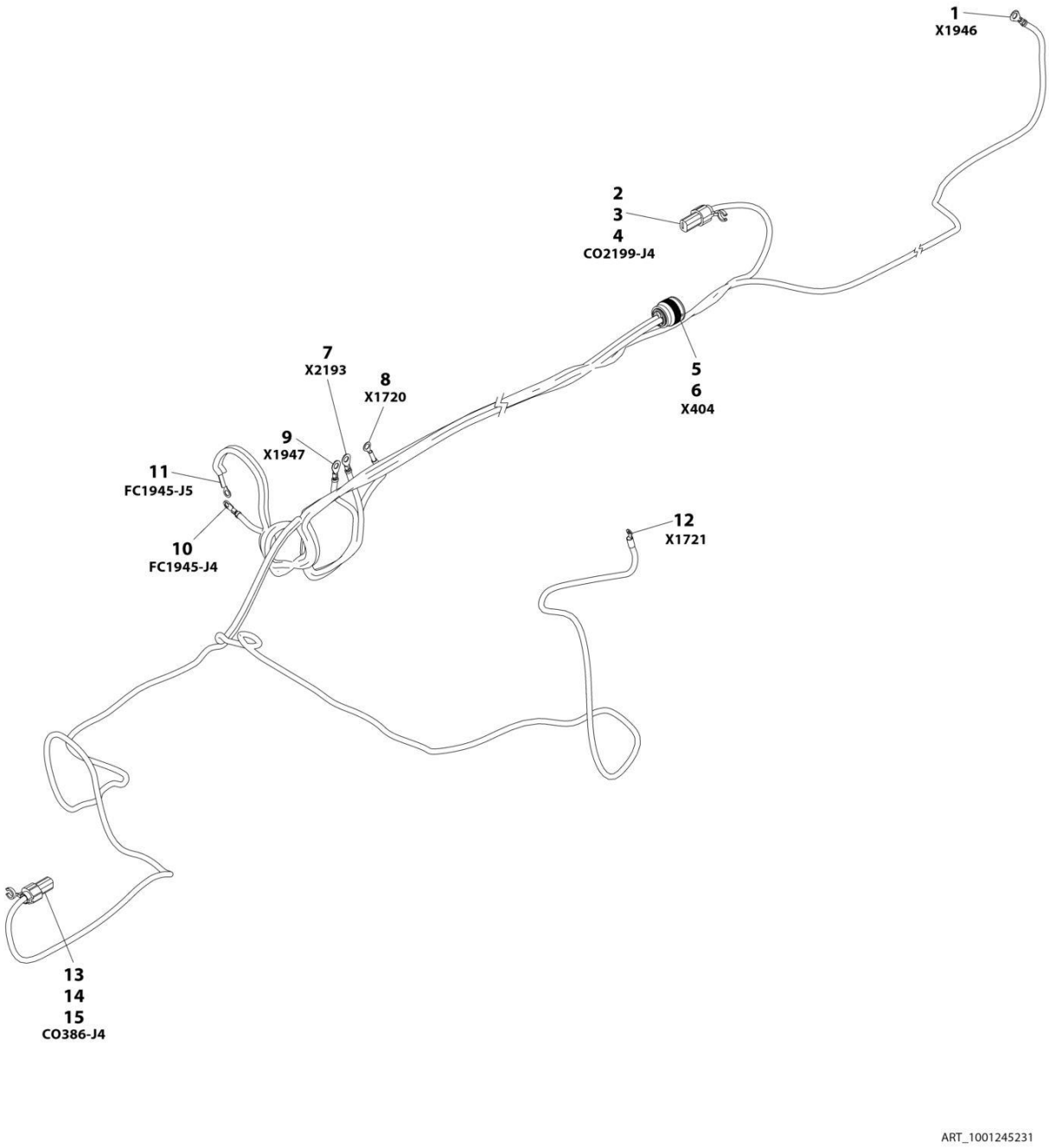

FIGURE 10-48. FRAME - FRONT FRAME POWER HARNESS

ITEM	PART NUMBER	QTY	DESCRIPTION	REV
	1001245231	Ref	Front Frame Power Harness	C
1	1001187076	1	Terminal, Ring	
2	1001160509	1	Connector	
3	1001160510	1	Terminal	
4	1001175267	1	Seal	
5	1001165310	1	Connector	
6	91013192	2	Terminal	
7	1001187076	1	Terminal, Ring	
8	1001187076	1	Terminal, Ring	
9	1001187076	1	Terminal, Ring	
10	1001187075	1	Terminal, Ring	
11	1001128127	1	Terminal, Ring	
12	1001187075	1	Terminal, Ring	
13	1001160509	1	Connector	
14	1001160510	1	Terminal	
15	1001175267	1	Seal	

FIGURE 10-49. FRAME - REAR FRAME POWER HARNESS

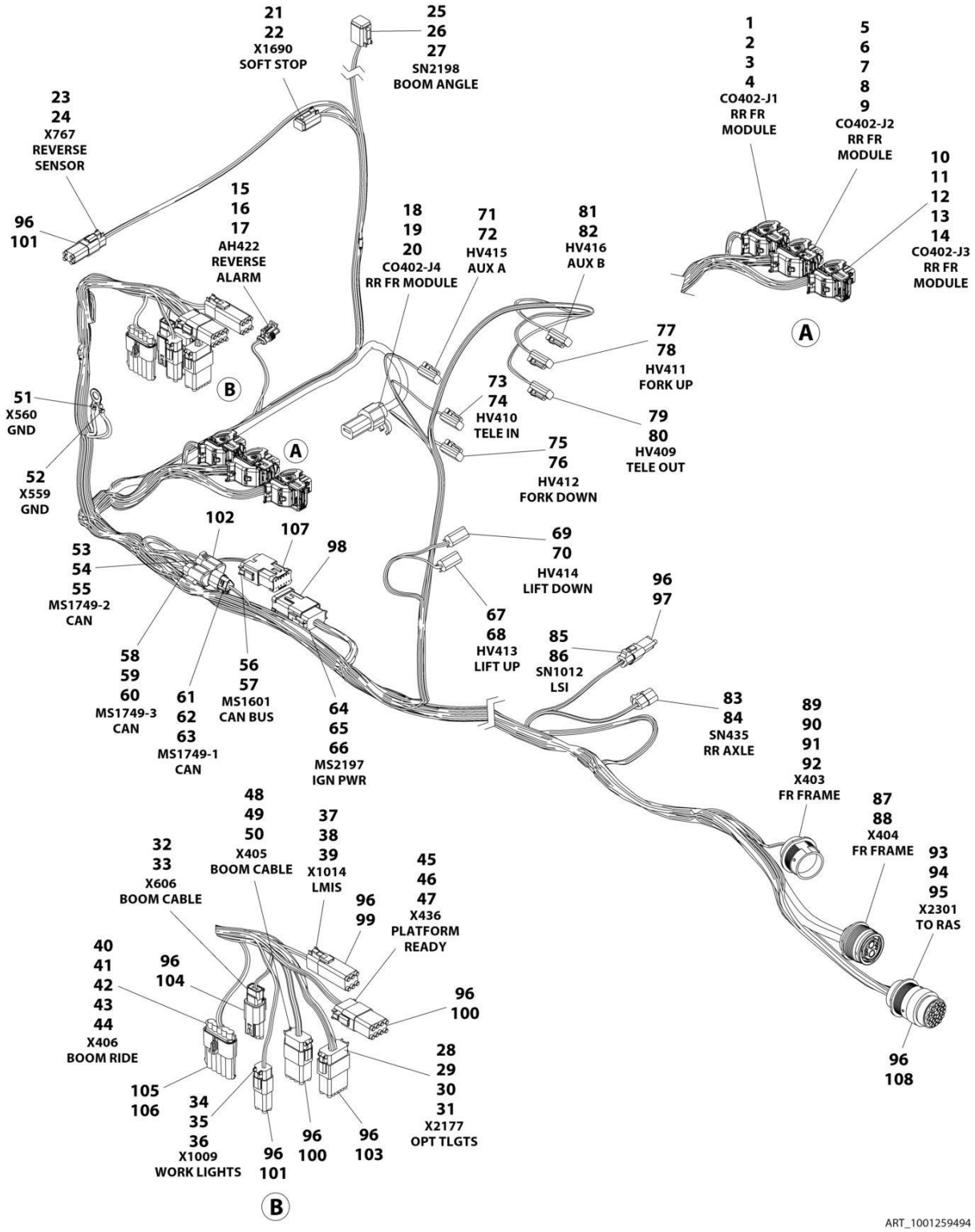

FIGURE 10-49. FRAME - REAR FRAME POWER HARNESS

ITEM	PART NUMBER	QTY	DESCRIPTION	REV
	1001259494	Ref	Front Frame Harness	A
1	1001161958	1	Connector	
2	1001161097	11	Terminal	
3	1001161100	13	Plug	
4	1001161101	8	Plug	
5	1001161964	1	Connector	
6	1001161097	28	Terminal	
7	1001161099	6	Terminal	
8	1001161100	12	Plug	
9	1001161101	2	Plug	
10	1001160499	1	Connector	
11	1001161097	8	Terminal	
12	1001161099	7	Terminal	
13	1001161100	16	Plug	
14	1001161101	1	Plug	
15	4461118	1	Connector	
16	1001107854	2	Terminal	
17	1001116763	2	Seal	
18	1001160509	1	Connector	
19	1001160510	1	Terminal	
20	1001175267	1	Seal	
21	4460884	1	Connector	
22	4460465	4	Terminal	
23	4460884	1	Connector	
24	4460465	4	Terminal	
25	4460894	1	Connector	
26	4460465	4	Terminal	
27	4460466	2	Plug	
28	4460933	1	Connector	
29	4460942	8	Terminal	
30	4460465	2	Terminal	
31	4460466	2	Plug	
32	4461018	1	Connector	
33	4460509	2	Terminal	
34	4460884	1	Connector	
35	4460465	2	Terminal	
36	4460466	2	Plug	
37	4460894	1	Connector	
38	4460465	3	Terminal	
39	4460466	3	Plug	
40	1001121726	1	Connector	
41	4460744	4	Terminal	
42	1001116727	1	Plug	
43	1001189877	3	Seal	
44	4460458	1	Terminal Seal	
45	4460930	1	Connector	
46	4460465	6	Terminal	
47	4460466	2	Plug	
48	4460930	1	Connector	
49	4460465	6	Terminal	

ITEM	PART NUMBER	QTY	DESCRIPTION	REV
50	4460466	2	Plug	
51	1001187080	1	Ring, Terminal	
52	1001187080	1	Ring, Terminal	
53	4460539	1	Connector	
54	4460944	2	Terminal	
55	4460466	1	Plug	
56	4460933	1	Connector	
57	4460465	12	Terminal	
58	1001116812	1	Connector	
59	4460944	2	Terminal	
60	4460466	1	Plug	
61	1001116812	1	Connector	
62	4460944	2	Terminal	
63	4460466	1	Plug	
64	4460836	1	Connector	
65	4460944	10	Terminal	
66	4460466	2	Plug	
67	4460891	1	Connector	
68	4460465	2	Terminal	
69	4460891	1	Connector	
70	4460465	2	Terminal	
71	4460891	1	Connector	
72	4460465	2	Terminal	
73	4460891	1	Connector	
74	4460465	2	Terminal	
75	4460891	1	Connector	
76	4460465	2	Terminal	
77	4460891	1	Connector	
78	4460465	2	Terminal	
79	4460891	1	Connector	
80	4460465	2	Terminal	
81	4460891	1	Connector	
82	4460465	2	Terminal	
83	4460539	1	Connector	
84	4460944	3	Terminal	
85	4460539	1	Connector	
86	4460465	3	Terminal	
87	1001165311	1	Connector	
88	91013191	2	Terminal	
89	1001148106	1	Connector	
90	4460464	11	Terminal	
91	4460941	1	Terminal	
92	4460466	11	Plug	
93	1001148106	1	Connector	
94	4460464	22	Terminal	
95	4460466	1	Plug	
96	4460466	70	Plug	
97	4460536	1	Terminal	
98	4460837	1	Connector, Housing	
99	4460899	1	Terminal	
100	4460931	2	Connector	

ITEM	PART NUMBER	QTY	DESCRIPTION	REV
101	4460932	2	Connector	
102	4460945	1	Terminal	
103	4460970	1	Connector	
104	4461017	1	Connector	
105	1001116727	5	Plug	
106	1001121727	1	Connector	
107	1001125677	1	Connector	
108	1001147923	1	Connector	

FIGURE 10-50. FRONT FRAME HARNESS

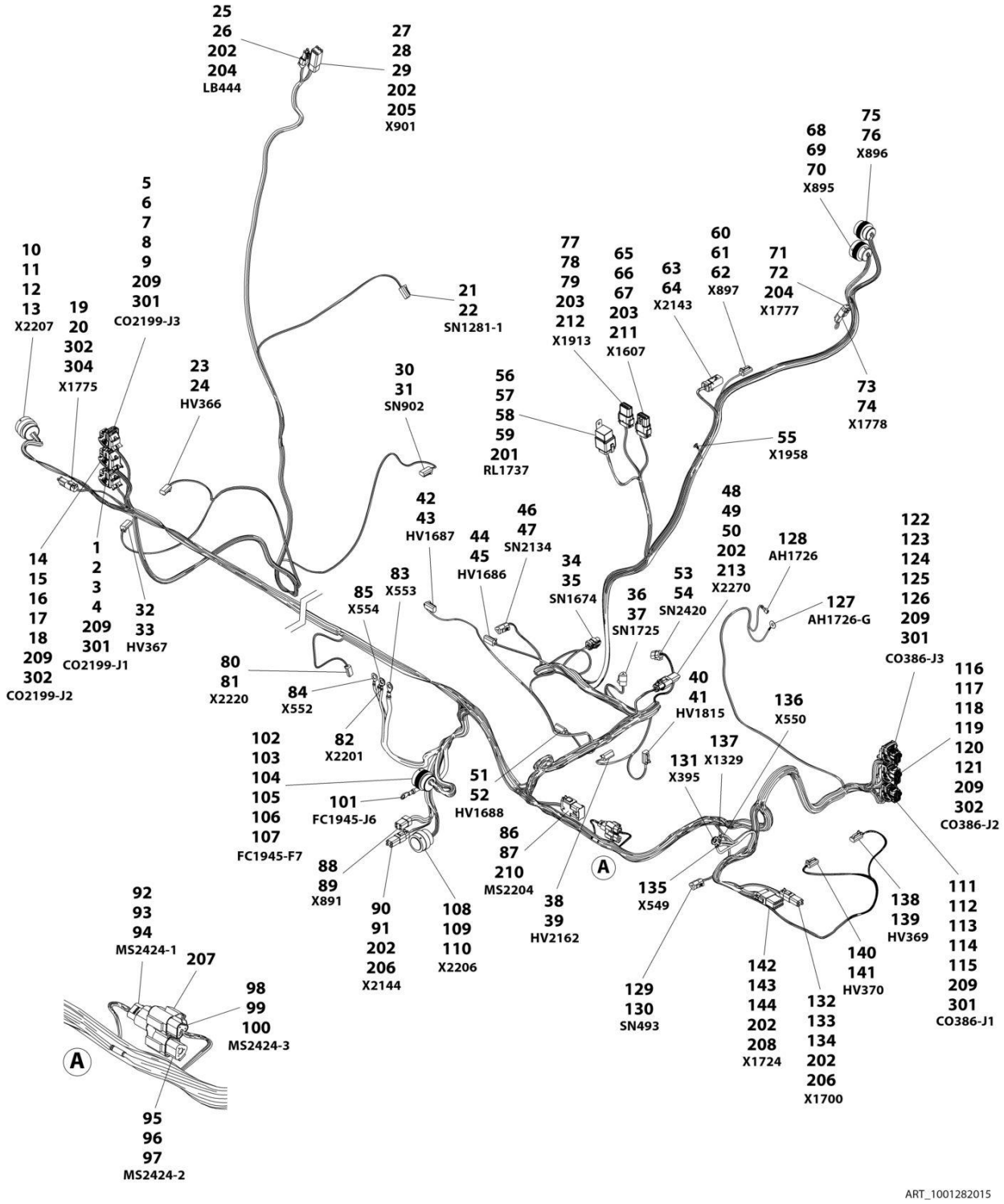

FIGURE 10-50. FRONT FRAME HARNESS

ITEM	PART NUMBER	QTY	DESCRIPTION	REV
	1001282015	Ref	FRONT FRAME HARNESS	B
1	1001161958	1	Connector	
2	1001161100	21	Plug	
3	1001161097	3	Terminal	
4	1001161101	8	Plug	
5	1001160499	1	Connector	
6	1001161100	20	Plug	
7	1001161097	4	Terminal	
8	1001161101	7	Plug	
9	1001161099	1	Terminal	
10	1001147923	1	Connector	
11	4460465	11	Terminal	
12	4460942	2	Terminal	
13	4460466	10	Plug	
14	1001161964	1	Connector	
15	1001161100	33	Plug	
16	1001161097	7	Terminal	
17	1001161099	3	Terminal	
18	1001161101	5	Plug	
19	4460891	1	Connector	
20	4460465	2	Terminal	
21	4460891	1	Connector	
22	4460465	2	Terminal	
23	4460891	1	Connector	
24	4460465	2	Terminal	
25	4460891	1	Connector	
26	4460942	2	Terminal	
27	4460894	1	Plug	
28	4460942	4	Terminal	
29	4460465	2	Terminal	
30	4460891	1	Connector	
31	4460465	2	Terminal	
32	4460891	1	Connector	
33	4460465	2	Terminal	
34	1001116950	1	Connector	
35	4460465	2	Terminal	
36	4460539	1	Terminal	
37	4460465	3	Terminal	
38	4460891	1	Connector	
39	4460465	2	Terminal	
40	4460891	1	Connector	
41	4460465	2	Terminal	
42	4460891	1	Connector	
43	4460465	2	Terminal	
44	4460891	1	Connector	
45	4460465	2	Terminal	
46	4460539	1	Terminal	
47	4460465	3	Terminal	
48	1001116812	1	Connector	
49	4460465	2	Terminal	

ITEM	PART NUMBER	QTY	DESCRIPTION	REV
50	4460466	1	Plug	
51	4460891	1	Connector	
52	4460465	2	Terminal	
53	4460539	1	Terminal	
54	4460465	3	Terminal	
55	1001207173	1	Terminal	
56	1001231398	1	Connector	
57	1001231400	4	Terminal	
58	1001231406	1	Plug	
59	1001231404	4	Seal	
60	4460891	1	Connector	
61	4460942	1	Terminal	
62	4460466	1	Plug	
63	1001195689	1	Connector	
64	4460464	4	Terminal	
65	1001116774	1	Terminal	
66	4460518	10	Plug	
67	1001126008	2	Terminal	
68	1001118323	1	Plug	
69	4460942	4	Terminal	
70	91013192	2	Terminal	
71	4460891	1	Connector	
72	4460465	2	Terminal	
73	4460897	1	Terminal	
74	4460464	2	Terminal	
75	4461015	1	Connector	
76	4460465	14	Terminal	
77	1001116808	1	Connector	
78	4460518	9	Plug	
79	1001126008	3	Terminal	
80	4461290	1	Connector	
81	4460928	2	Terminal	
82	1001187079	1	Terminal	
83	1001187076	1	Terminal	
84	1001187079	1	Terminal	
85	1001187079	1	Terminal	
86	4460933	1	Plug	
87	4460465	12	Terminal	
88	1001116810	1	Connector	
89	1001150611	4	Terminal	
90	4460884	1	Plug	
91	4460465	4	Terminal	
92	1001116812	1	Connector, 3 Position	
93	4460944	2	Socket, Female	
94	4460466	1	Plug, Terminal	
95	4460539	1	Plug, Male - 3 Position	
96	4460944	2	Socket, Female	
97	4460466	1	Plug, Terminal	
98	1001116812	1	Connector, 3 Position	
99	4460944	2	Socket, Female	
100	4460466	1	Plug, Terminal	

ITEM	PART NUMBER	QTY	DESCRIPTION	REV
101	1001187075	1	Terminal	
102	1001165309	1	Connector	
103	4460466	2	Plug	
104	4460465	9	Terminal	
105	4460942	2	Terminal	
106	4460509	3	Terminal	
107	1001150611	3	Terminal	
108	1001147923	1	Connector	
109	4460465	21	Terminal	
110	4460466	2	Plug	
111	1001161958	1	Connector	
112	1001161100	15	Plug	
113	1001161097	9	Terminal	
114	1001161101	3	Plug	
115	1001161098	5	Terminal	
116	1001161964	1	Connector	
117	1001161097	22	Terminal	
118	1001161100	18	Plug	
119	1001161099	6	Terminal	
120	1001161098	1	Terminal	
121	1001161101	1	Plug	
122	1001160499	1	Connector	
123	1001161097	13	Terminal	
124	1001161100	12	Plug	
125	1001161099	7	Terminal	
126	1001161101	1	Plug	
127	1001187073	1	Terminal	
128	8220051	1	Connector	
129	4460539	1	Terminal	
130	4460465	3	Terminal	
131	1001187080	1	Terminal	
132	4460884	1	Plug	
133	4460465	3	Terminal	
134	4460942	1	Terminal	
135	1001187079	1	Terminal	
136	1001187079	1	Terminal	
137	1001187080	1	Terminal	
138	4460891	1	Connector	
139	4460465	2	Terminal	
140	4460891	1	Connector	
141	4460465	2	Terminal	
142	4460933	1	Plug	
143	4460942	10	Terminal	
144	4460466	2	Plug	
201	3740080	1	Relay, Weather Proof	
202	4460466	33	Plug	
203	4460518	24	Plug	
204	4460897	3	Terminal	
205	4460899	1	Terminal	
206	4460932	2	Connector	
207	4460945	1	Terminal	

ITEM	PART NUMBER	QTY	DESCRIPTION	REV
208	4460970	1	Plug	
209	1001008559	6	Strap	
210	1001125677	1	Connector	
211	1001132169	1	Connector	
212	1001132170	1	Connector	
213	1001144147	1	Connector	
301	643191201	4	Cover	
302	643201301	2	Cover	

FIGURE 10-51. FRAME - REAR FRAME MODULE INSTALLATION

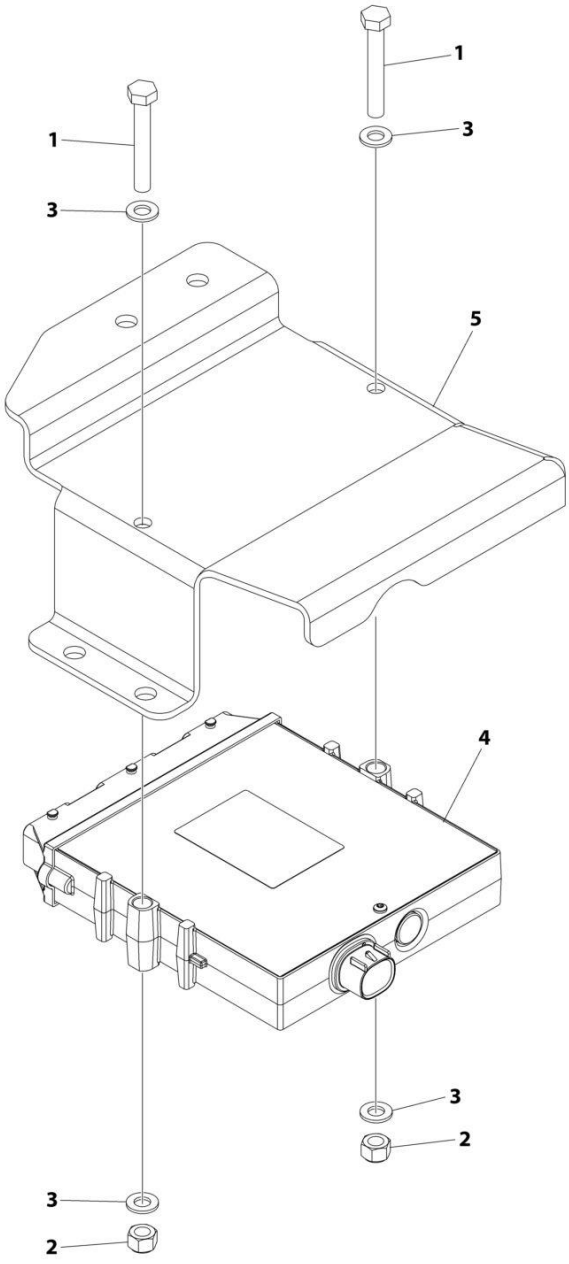

ART_1001210770_E

FIGURE 10-51. FRAME - REAR FRAME MODULE INSTALLATION

ITEM	PART NUMBER	QTY	DESCRIPTION	REV
	1001210770	Ref	REAR FRAME MODULE INSTALLATION	E
1	0700819	2	Bolt M8 x 55	
2	3290805	2	Nut M8 x 1.25	
3	4811900	4	Washer M8	
4	1001270468	1	Control, Rear Frame Module	
5	1001255581	1	Bracket	

FIGURE 10-52. FRAME - RIDE CONTROL WIRING INSTALLATION

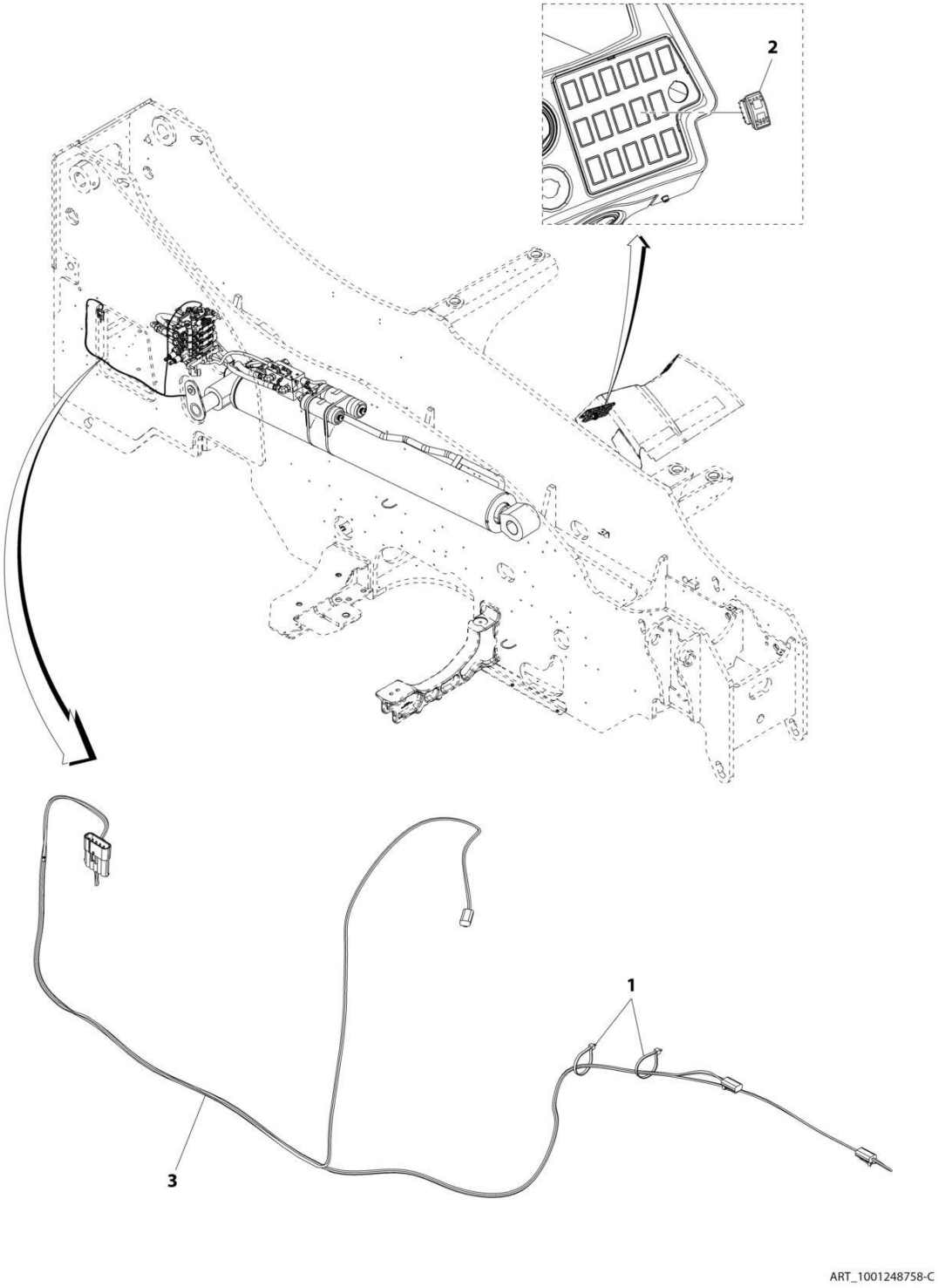

FIGURE 10-52. FRAME - RIDE CONTROL WIRING INSTALLATION

ITEM	PART NUMBER	QTY	DESCRIPTION	REV
	1001248758	Ref	Ride Control Wiring Installation	C
1	1001008559	2	Strap, Cable	
2	1001159745	1	Switch, Boom Ride	
3	1001246832	1	Harness, Boom Ride/Float (See Separate Breakdown in this Section)	

FIGURE 10-53. HEATER INSTALLATION - FUEL FILTER

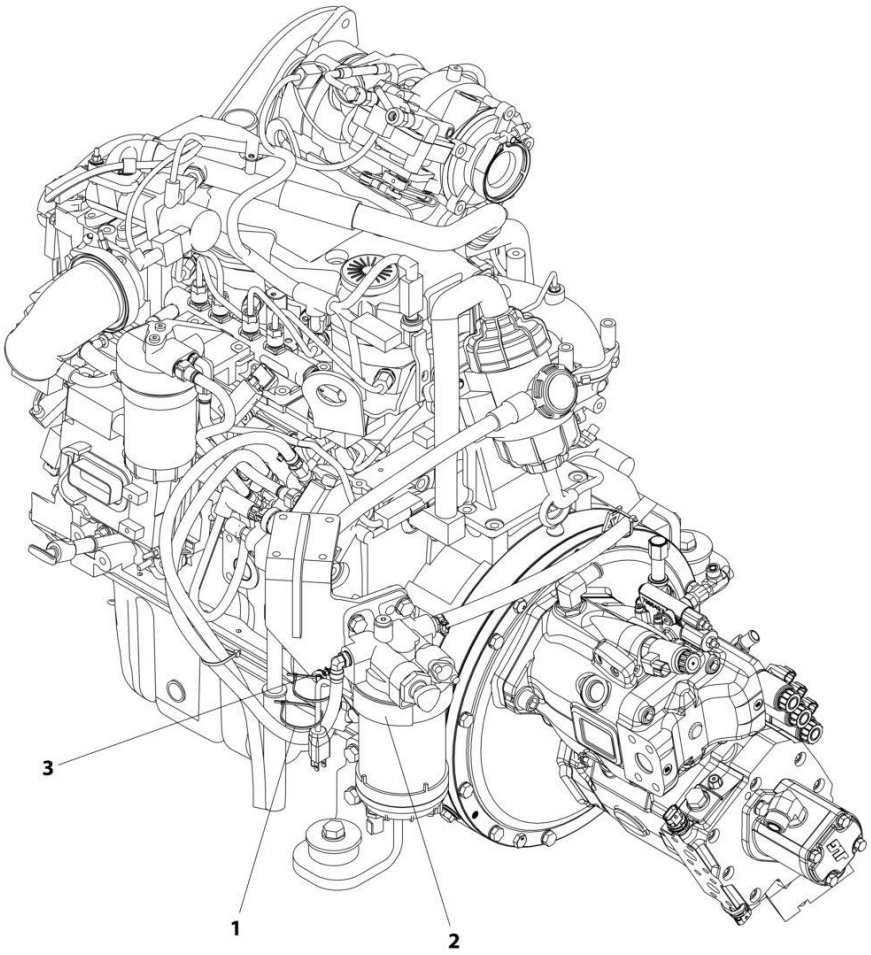

ART_1001247501-A

FIGURE 10-53. HEATER INSTALLATION - FUEL FILTER

ITEM	PART NUMBER	QTY	DESCRIPTION	REV
	1001247501	Ref	Fuel Filter Heater Installation	A
1	4240099	2	Strap, Tie	
2	1001202498	1	Pad	
3	1001202986	1	Strap, Fir Tree Push Mount	

FIGURE 10-54. HEATER INSTALLATION - HYDRAULIC TANK

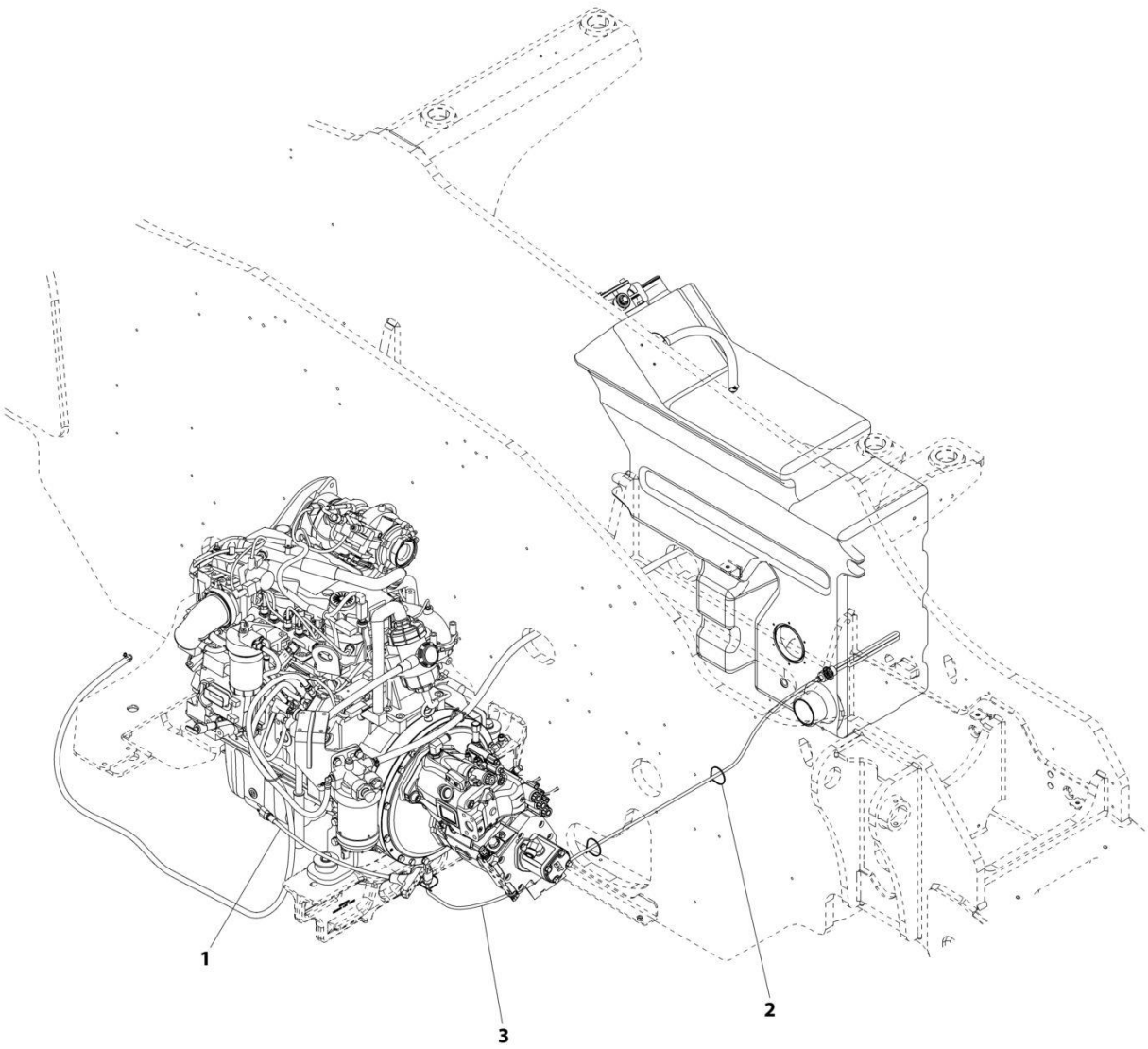

ART_1001247917-A

FIGURE 10-54. HEATER INSTALLATION - HYDRAULIC TANK

ITEM	PART NUMBER	QTY	DESCRIPTION	REV
	1001247917	Ref	Hydraulic Tank Heater Installation	A
1	1060626	1	Cord, 3-Way Extension	
2	4240099	3	Strap, Tie	
3	1001105886	1	Heater, Immersion	

FIGURE 10-55. HEATER INSTALLATION - OIL PAN

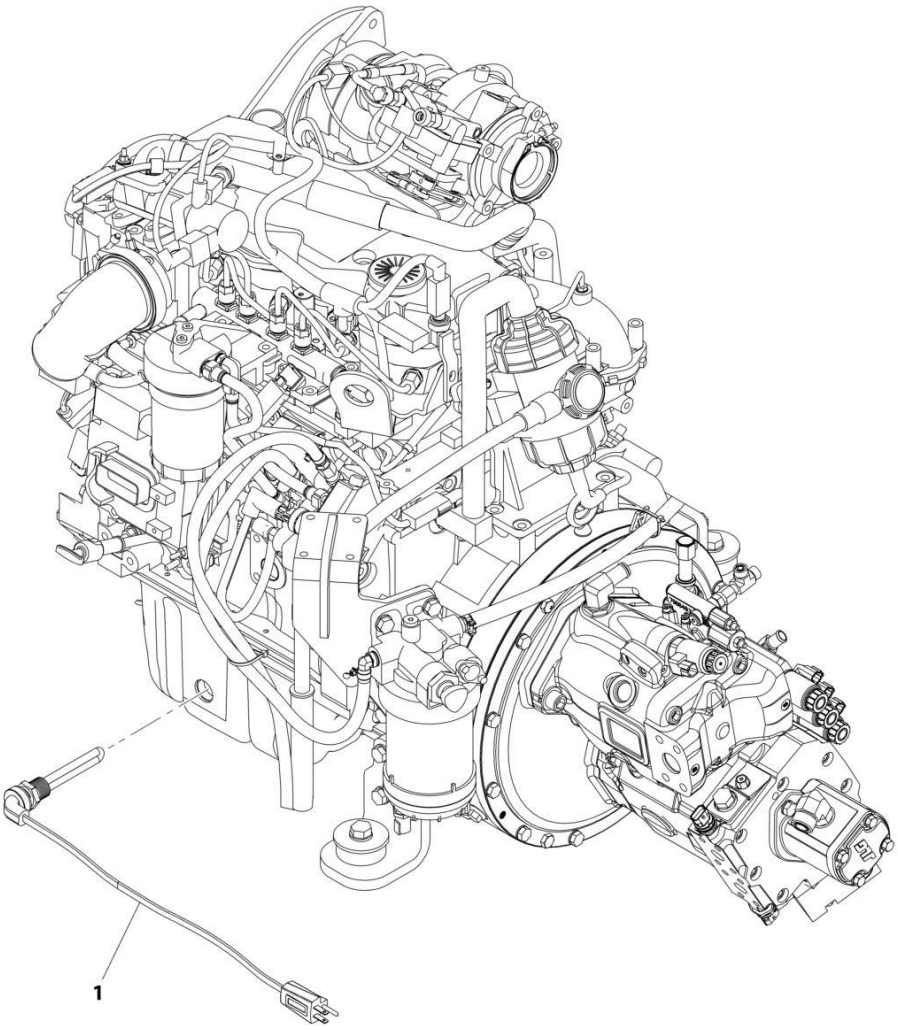

ART_1001247528-A

FIGURE 10-55. HEATER INSTALLATION - OIL PAN

ITEM	PART NUMBER	QTY	DESCRIPTION	REV
	1001247528	Ref	Oil Pan Heater Installation	A
1	2580062	1	Heater, Engine Block	

FIGURE 10-56. HVAC ACTUATOR HARNESS

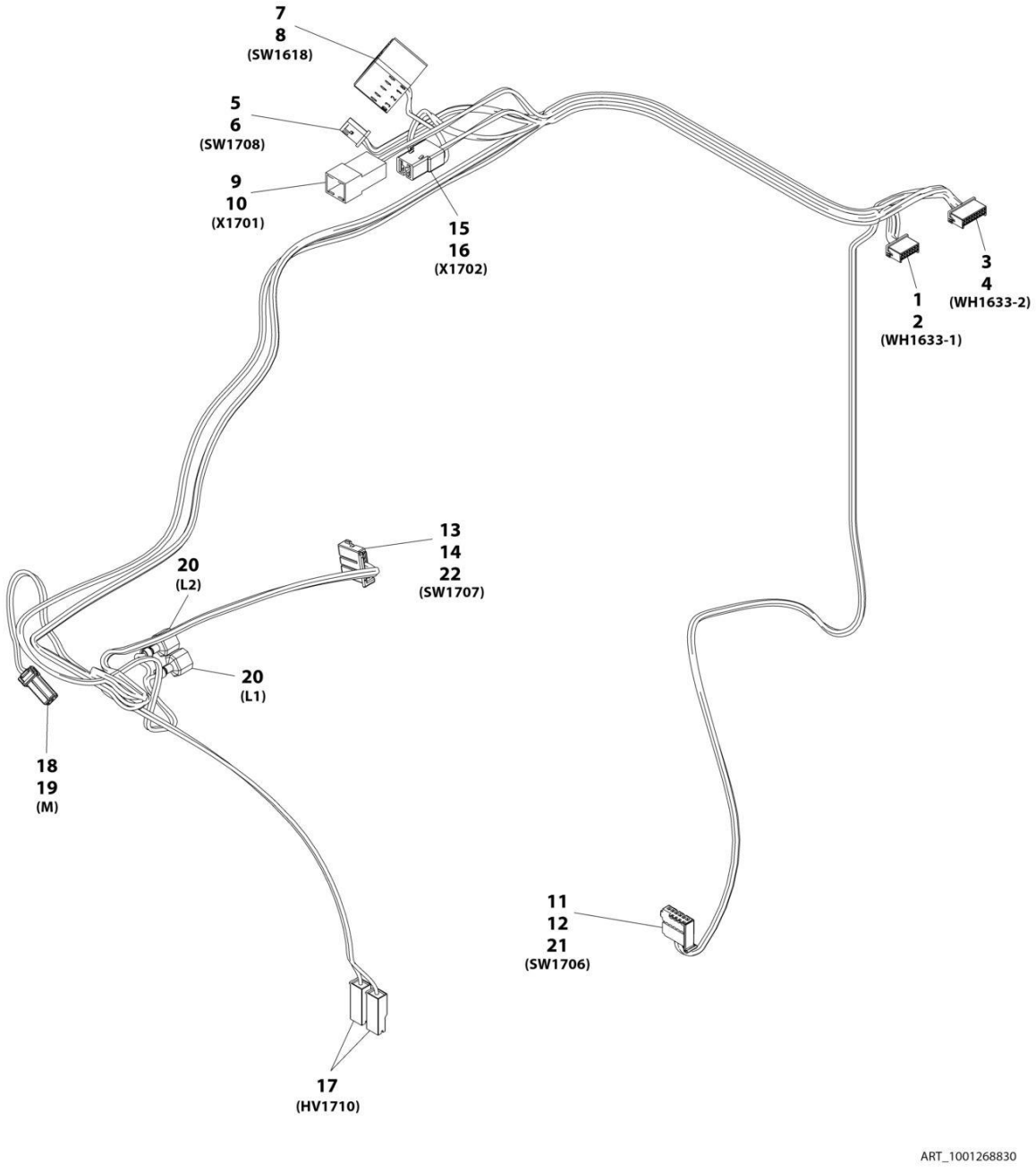

FIGURE 10-56. HVAC ACTUATOR HARNESS

ITEM	PART NUMBER	QTY	DESCRIPTION	REV
	1001268830	Ref	CAB HVAC ACTUATOR HARNESS	B
1	1001274536	1	Connector	
2	1001274543	10	Terminal	
3	1001274537	1	Connector	
4	1001274543	8	Terminal	
5	1001184473	1	Connector	
6	1001184479	3	Terminal	
7	1001274533	1	Connector	
8	1001274539	4	Terminal	
9	1001116999	1	Connector	
10	1001274540	2	Terminal	
11	1001274534	1	Connector	
12	1001274541	2	Terminal	
13	1001274534	1	Connector	
14	1001274541	5	Terminal	
15	1001116991	1	Connector	
16	1001116720	2	Terminal	
17	1001274535	2	Connector	
18	1001274538	1	Connector	
19	1001274544	2	Terminal	
20	8220050	2	Terminal	
21	1001274553	1	Retainer	
22	1001274553	1	Retainer	

FIGURE 10-57. LIGHTS - BOOM WORKLIGHTS INSTALLATION (LED)

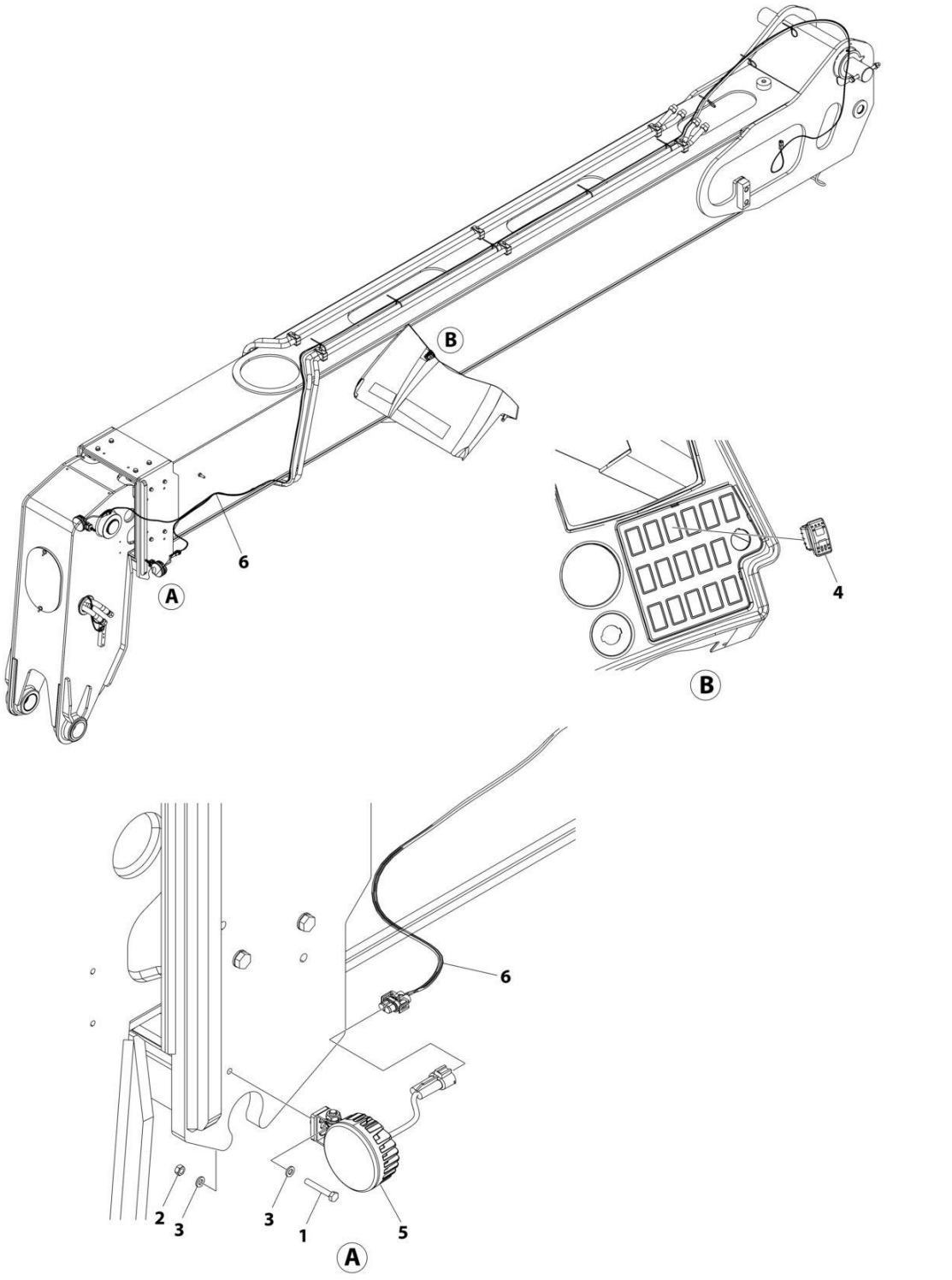

FIGURE 10-57. LIGHTS - BOOM WORKLIGHTS INSTALLATION (LED)

ITEM	PART NUMBER	QTY	DESCRIPTION	REV
	1001264431	Ref	BOOM WORK LIGHTS INSTALLATION	C
1	0700616	2	Bolt M6 x 40	
2	3290601	2	Nut M6	
3	4811700	4	Washer M6	
4	1001159739	1	Switch, Boom Work Lights	
5	1001273635	2	Lamp, LED Work Light	
6	1001246754	1	Harness, Boom Work Lights (See Separate Breakdown in this Section)	

FIGURE 10-58. LIGHTS - BOOM WORKLIGHTS HARNESS

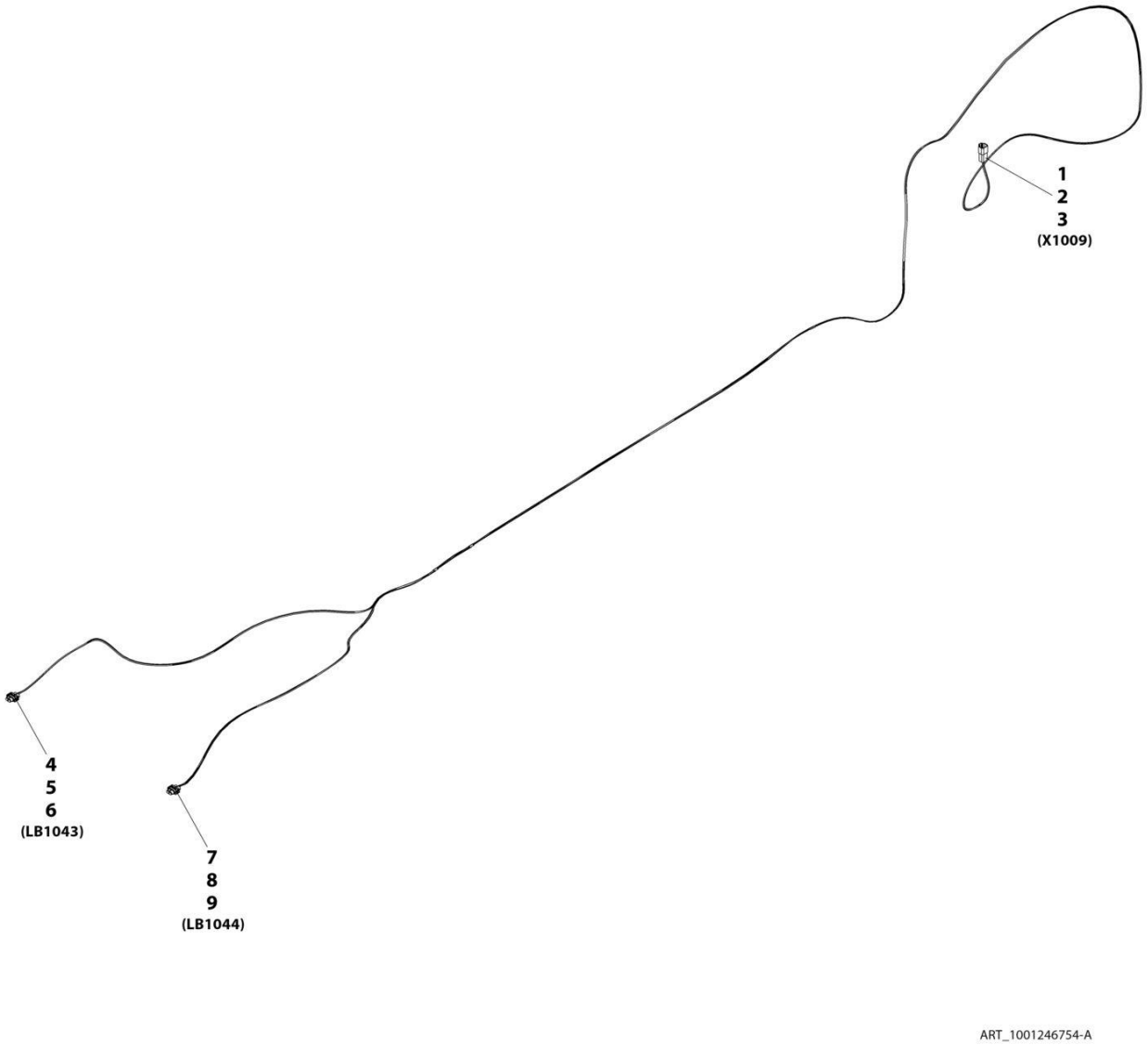

FIGURE 10-58. LIGHTS - BOOM WORKLIGHTS HARNESS

ITEM	PART NUMBER	QTY	DESCRIPTION	REV
	1001246754	Ref	Boom Worklights Harness	A
1	4460932	1	Connector	
2	4460464	2	Terminal	
3	4460466	2	Plug	
4	4461115	1	Connector	
5	1001116728	2	Terminal	
6	4460458	2	Terminal Seal	
7	4461115	1	Connector	
8	1001116728	2	Terminal	
9	4460458	2	Terminal Seal	

FIGURE 10-59. LIGHTS - CAB WORKLIGHTS INSTALLATION (NO A/C - LED)

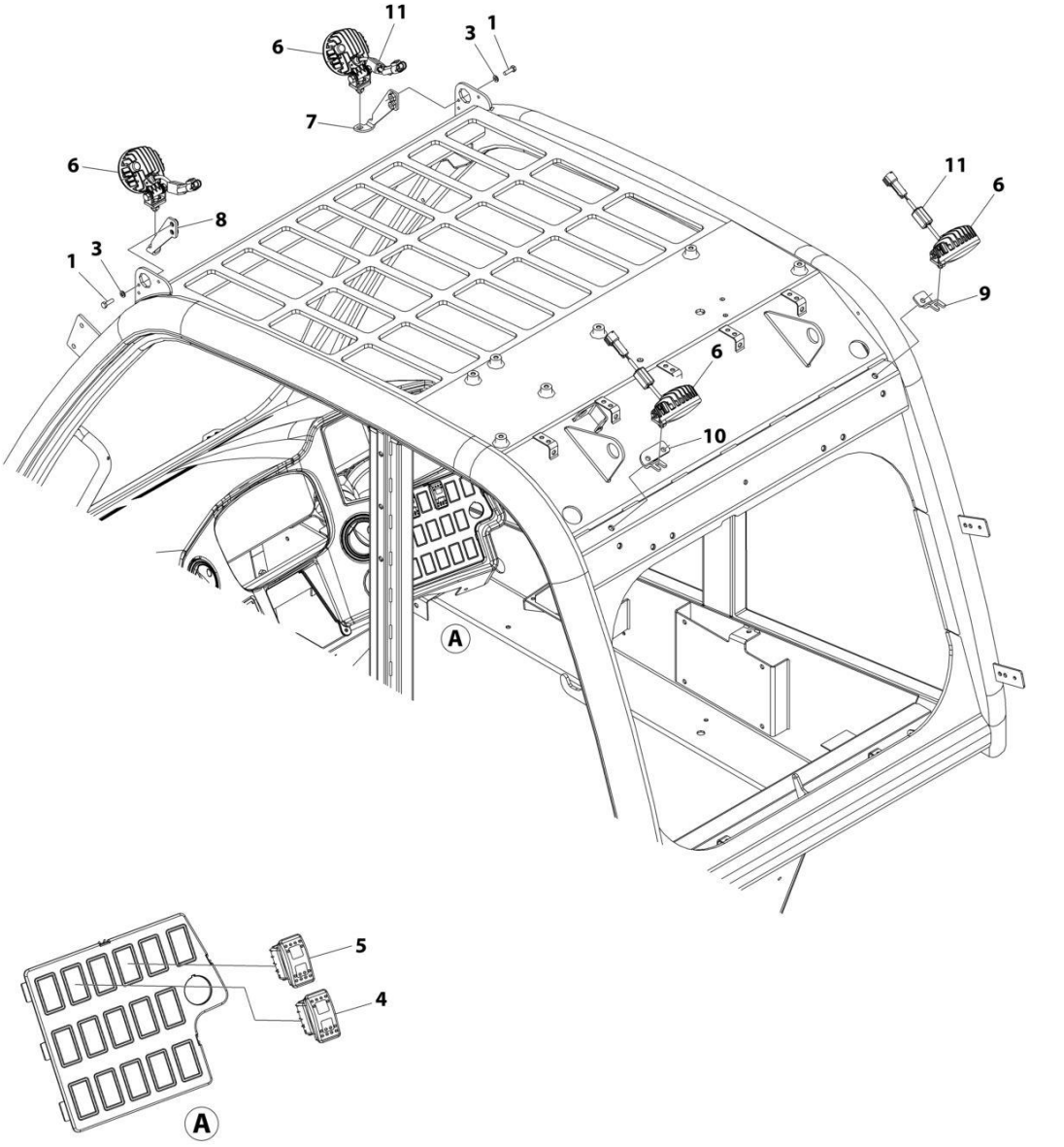

FIGURE 10-59. LIGHTS - CAB WORKLIGHTS INSTALLATION (NO A/C - LED)

ITEM	PART NUMBER	QTY	DESCRIPTION	REV
	1001200538	Ref	LIGHTS - CAB WORK LIGHTS INSTALLATION (NO A/C) (LED)	E
1	0700610	4	Bolt M6 x 20	
3	4811700	4	Washer M6	
4	1001159845	1	Switch, Front Worklights	
5	1001159846	1	Switch, Rear Worklights	
6	1001273635	4	Lamp, LED Work Light	
7	1001244193	1	Support, LED Work Light RH	
8	1001244192	1	Support, LED Work Light LH	
9	1001204528	1	Support, LED Work Light RH	
10	1001204530	1	Support, LED Work Light LH	
11	1001228989	4	Harness, Ferrite	

FIGURE 10-60. LIGHTS - CAB WORKLIGHTS INSTALLATION (A/C - LED)

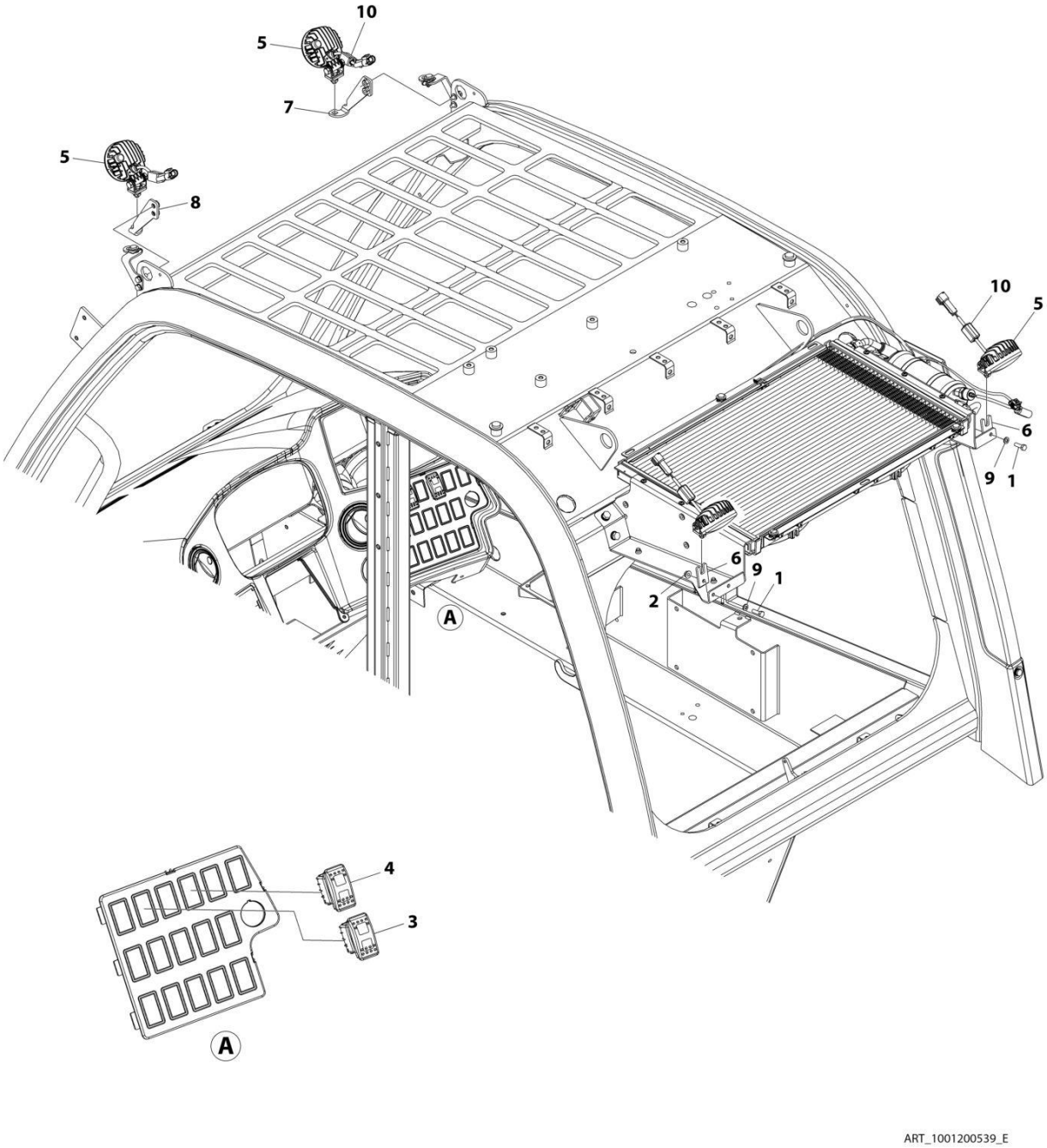

FIGURE 10-60. LIGHTS - CAB WORKLIGHTS INSTALLATION (A/C - LED)

ITEM	PART NUMBER	QTY	DESCRIPTION	REV
	1001200539	Ref	LIGHTS - CAB WORK LIGHTS INSTALLATION (A/C) (LED)	E
1	0700610	2	Bolt M6 x 20	
2	5220600	2	Nut M6	
3	1001159845	1	Switch, Front Worklights	
4	1001159846	1	Switch, Rear Worklights	
5	1001273635	4	Lamp, LED Worklights	
6	1001204060	2	Bracket	
7	1001244193	1	Support, LED Work Light RH	
8	1001244192	1	Support, LED Work Light LH	
9	4811700	2	Washer M6	
10	1001228989	4	Harness, Ferrite	

FIGURE 10-61. LIGHTS - HEADLIGHT HARNESS

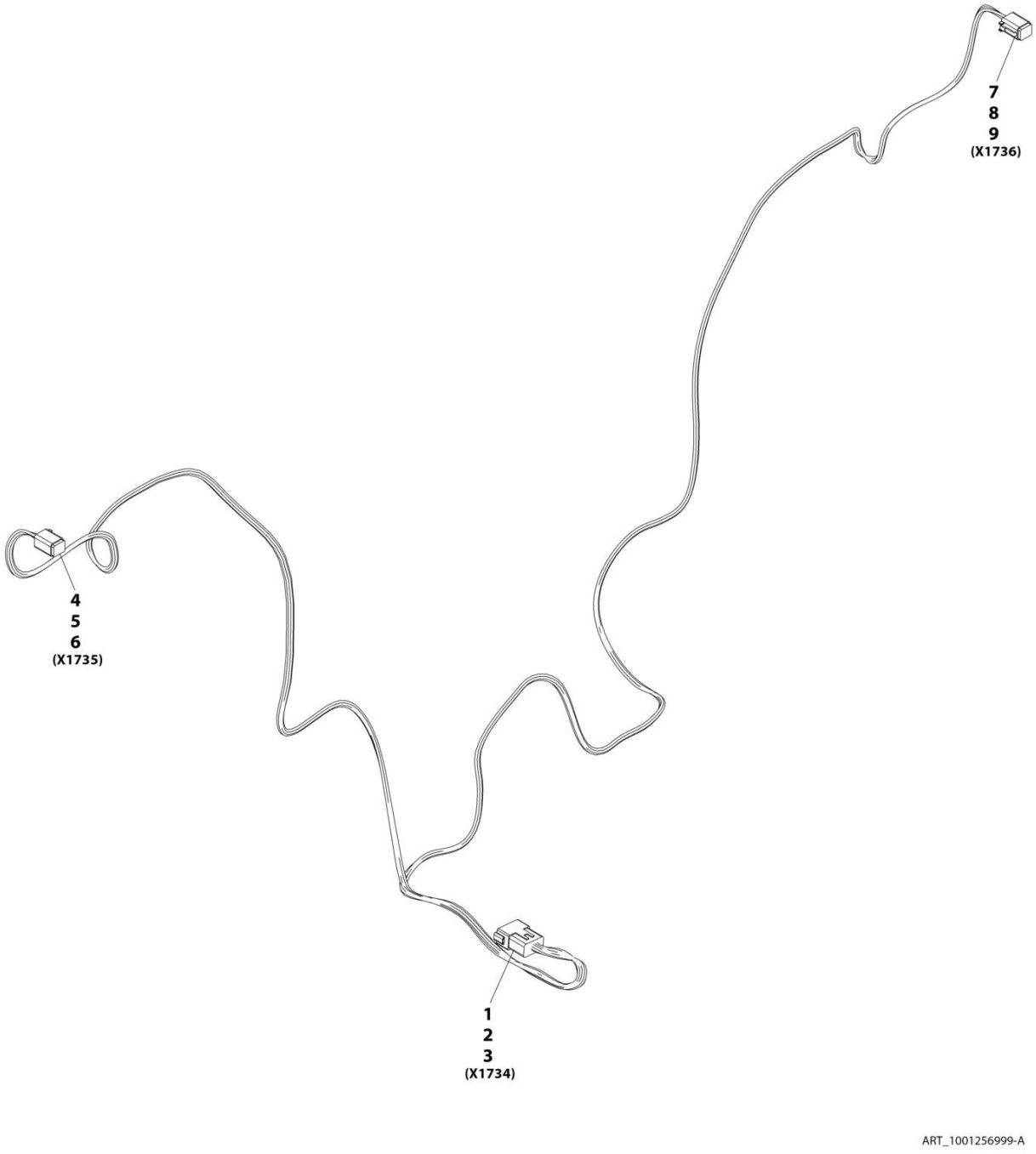

FIGURE 10-61. LIGHTS - HEADLIGHT HARNESS

ITEM	PART NUMBER	QTY	DESCRIPTION	REV
	1001256999	Ref	Headlight Harness	A
1	4460970	1	Connector	
2	4460941	10	Terminal	
3	4460466	2	Plug	
4	4460894	1	Connector	
5	4460942	5	Terminal	
6	4460466	1	Plug	
7	4460894	1	Connector	
8	4460942	5	Terminal	
9	4460466	1	Plug	

FIGURE 10-62. LIGHTS - ROAD LIGHTS INSTALLATION (LED)

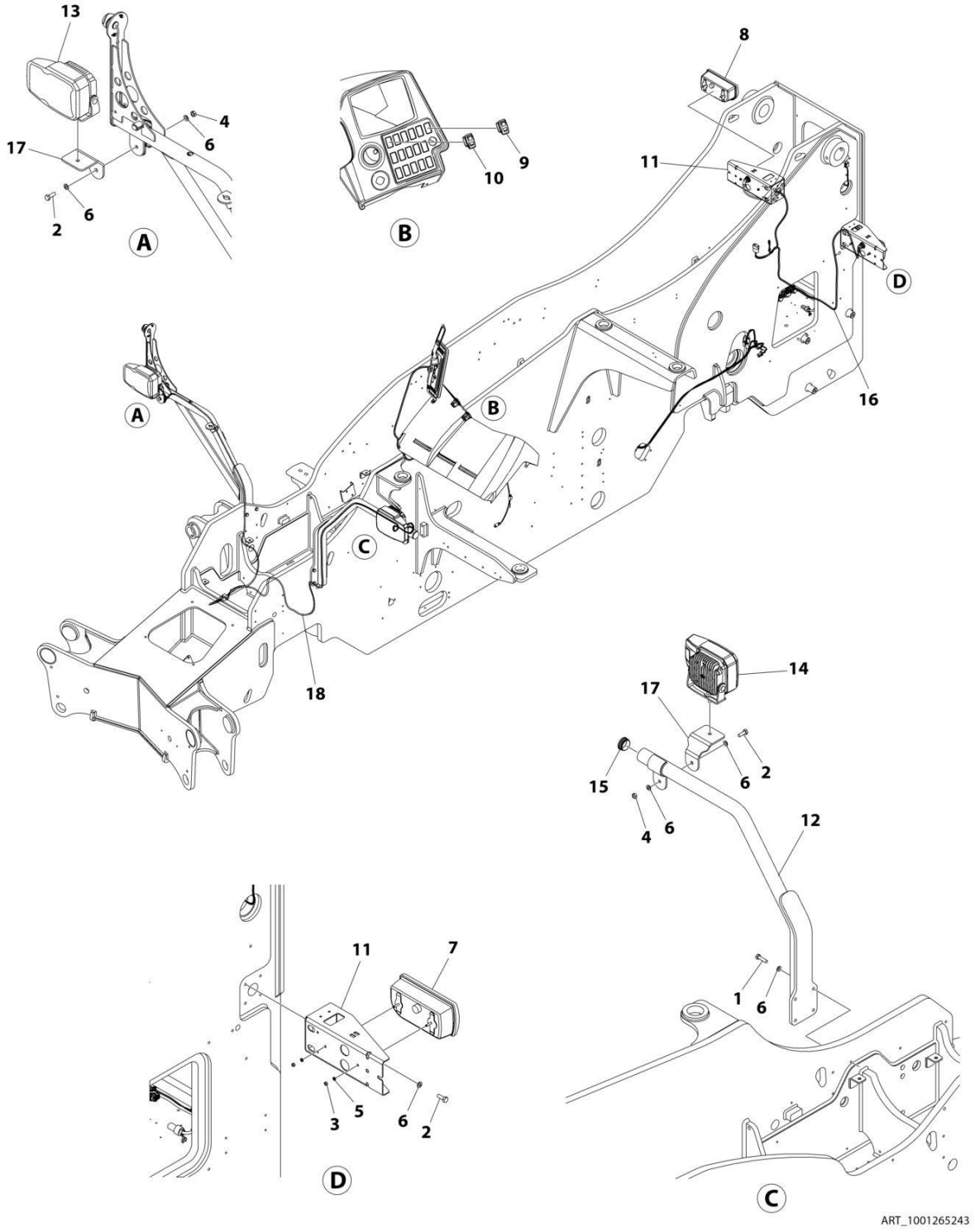

FIGURE 10-62. LIGHTS - ROAD LIGHTS INSTALLATION (LED)

ITEM	PART NUMBER	QTY	DESCRIPTION	REV
	1001265243	Ref	ROAD LIGHTS INSTALLATION	A
1	0701016	4	Bolt M10 x 40	
2	0761014	10	Bolt M10 x 30	
3	3290607	4	Nut M6	
4	3291001	2	Nut M10 Grd8	
5	4811700	4	Washer M6	
6	4812000	16	Washer M10	
7	1001091715	1	Lamp, Rear LH	
8	1001091716	1	Lamp, Rear RH	
9	1001159734	1	Switch, Hazard	
10	1001159737	1	Switch, Fog Lights	
11	1001196100	2	Bracket	
12	1001206100	1	Bracket	
13	1001209690	1	Light, Driving (RH - LED) (RH Dip)	
14	1001209691	1	Light, Driving (LH - LED) (LH Dip)	
15	1001209697	1	Cap	
16	1001244877	1	Harness, Tailights (See Separate Breakdown in this Section)	
17	1001256951	2	Bracket	
18	1001256999	1	Harness, Headlights (See Separate Breakdown in this Section)	

FIGURE 10-63. LIGHTS - TAILIGHT HARNESS

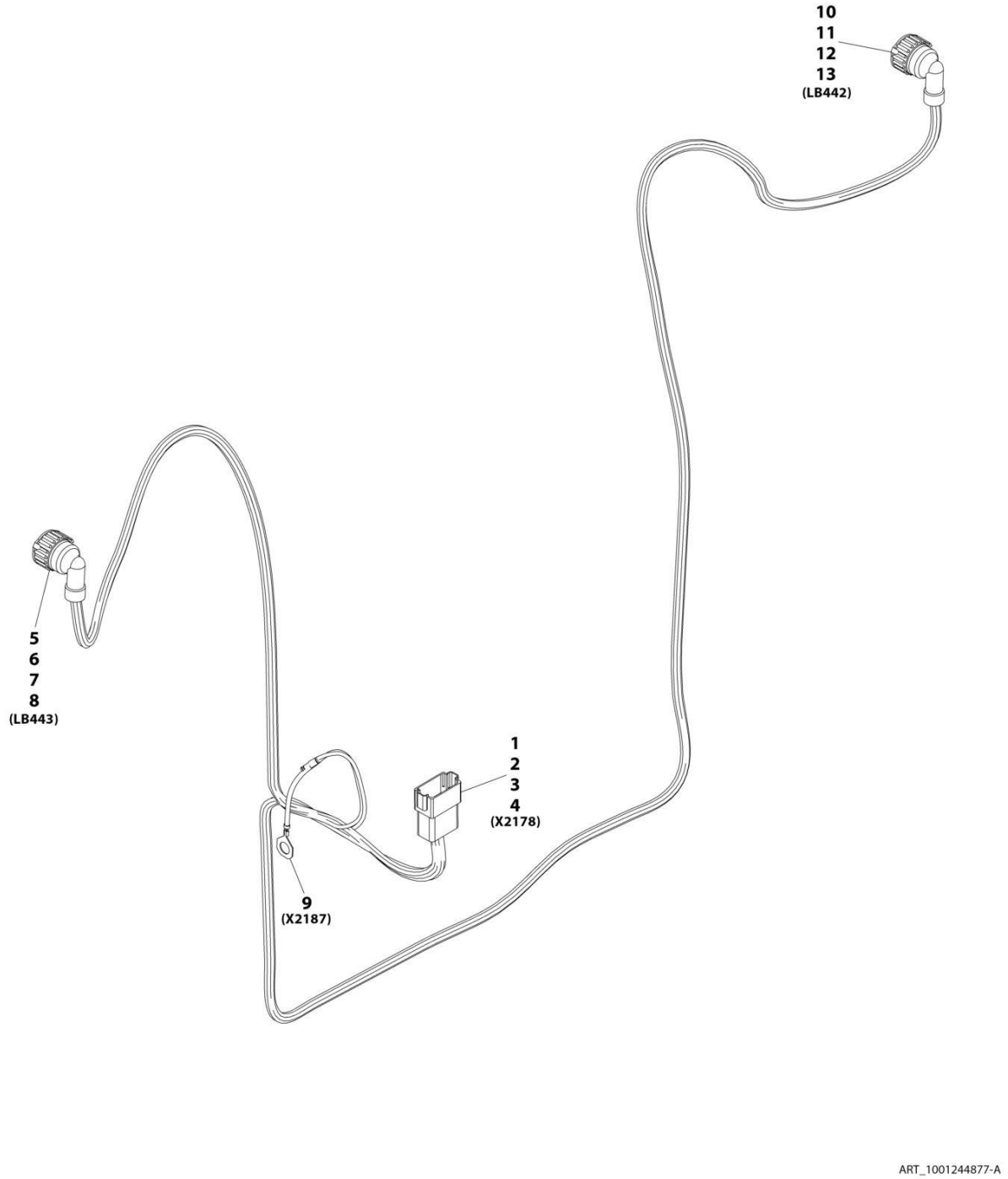

FIGURE 10-63. LIGHTS - TAILIGHT HARNESS

ITEM	PART NUMBER	QTY	DESCRIPTION	REV
	1001244877	Ref	Tailight Harness	A
1	4460970	1	Connector	
2	4460941	8	Terminal	
3	4460466	2	Plug	
4	4460464	2	Terminal	
5	1001116996	1	Connector	
6	1001118392	6	Terminal	
7	1001116696	1	Plug	
8	4461054	6	Seal	
9	1001187078	1	Ring, Terminal	
10	1001116696	1	Connector	
11	1001118392	6	Terminal	
12	1001116996	1	Plug	
13	4461054	6	Seal	

FIGURE 10-64. LMIS INSTALLATION

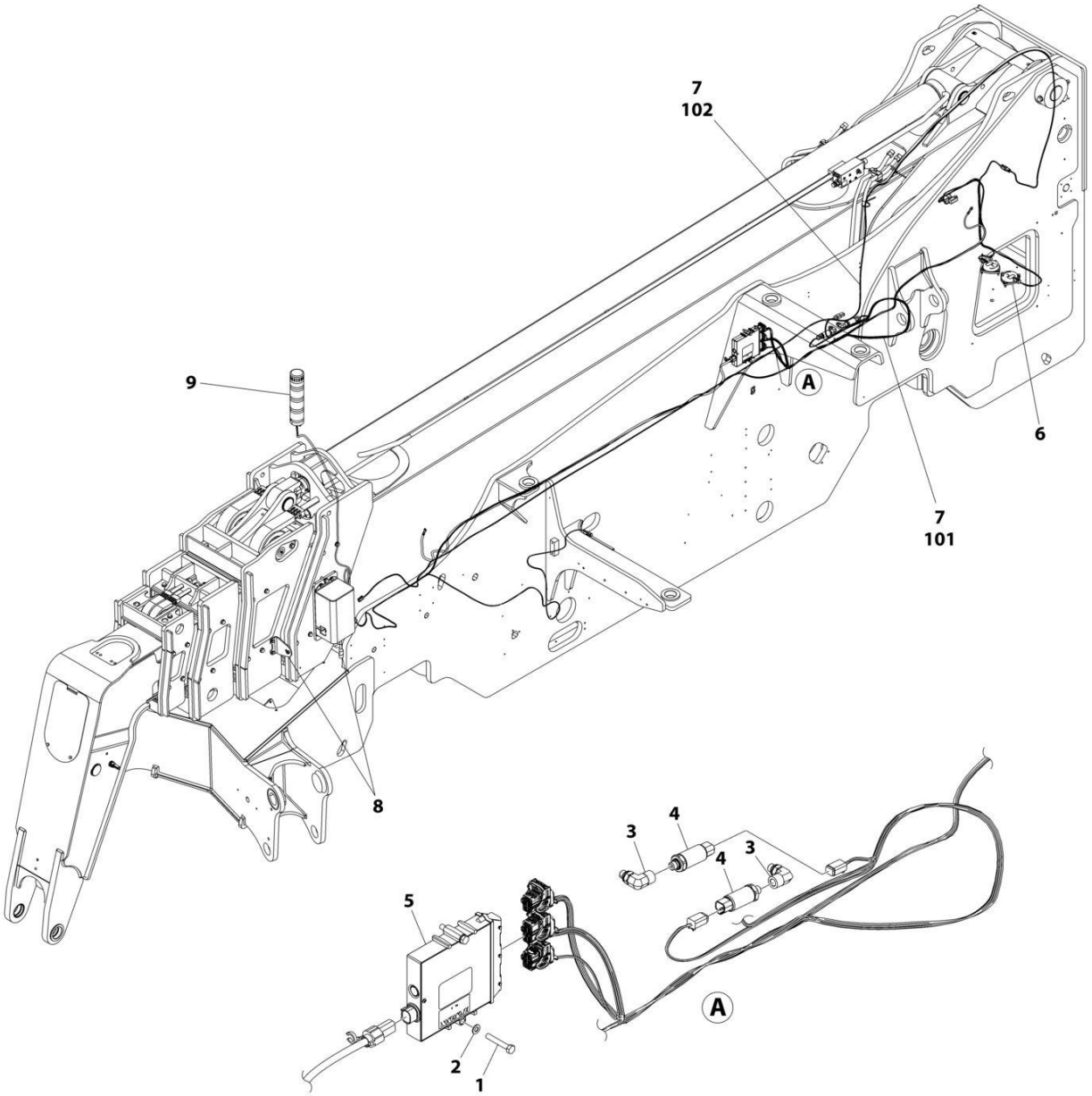

FIGURE 10-64. LMIS INSTALLATION

ITEM	PART NUMBER	QTY	DESCRIPTION	REV
	1001266906	Ref	LMIS COMPONENT INSTALLATION	B
1	0700818	2	Bolt M8 x 50	
2	4811900	2	Washer M8	
3	1001101855	2	Fitting, 90 FBSPP/BSPP	
4	1001162885	2	Sensor, Pressure	
5	1001270485	1	Module, Control	
6	1001201597	Ref	Installation, Tilt Sensor (See Separate Breakdown in this Section)	
7	1001266905	Ref	Installation, LMIS Wiring (Includes Items 101-102)	
8	1001248204	Ref	Installation, LMIS Cable Reel (See Separate Breakdown in this Section)	
9	1001195591	Ref	Installation, LMIS Beacon (See Separate Breakdown in this Section)	
101	1001201599	1	Harness, LMIS Chassis Options (See Separate Breakdown in this Section)	
102	1001201600	1	Harness, LMIS Boom (See Separate Breakdown in this Section)	

FIGURE 10-65. LMIS BEACON LIGHT INSTALLATION

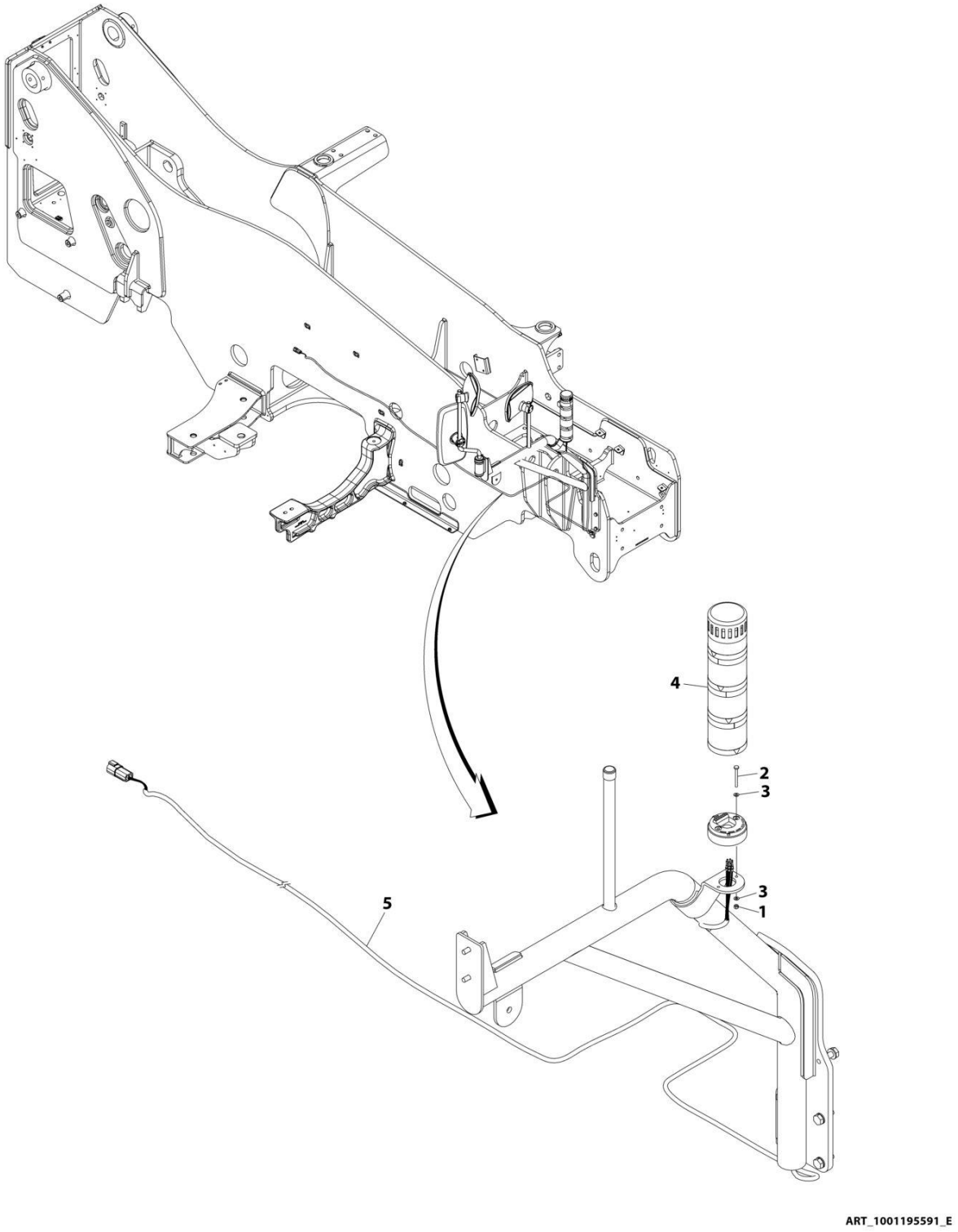

FIGURE 10-65. LMIS BEACON LIGHT INSTALLATION

ITEM	PART NUMBER	QTY	DESCRIPTION	REV
	1001195591	Ref	LMIS Beacon Light Installation	E
1	3290405	2	Nut M4	
2	4010416	2	Screw, M4X40	
3	4811400	4	Washer, M4	
	1001265343	1	Light, LMIS Beacon	
5	1001117247	1	Harness, LMIS Beacon Option (See Separate Breakdown in this Section)	
7	1001146588	1	Tie-Strap (Not Shown)	

FIGURE 10-66. LMIS BEACON OPTION HARNESS

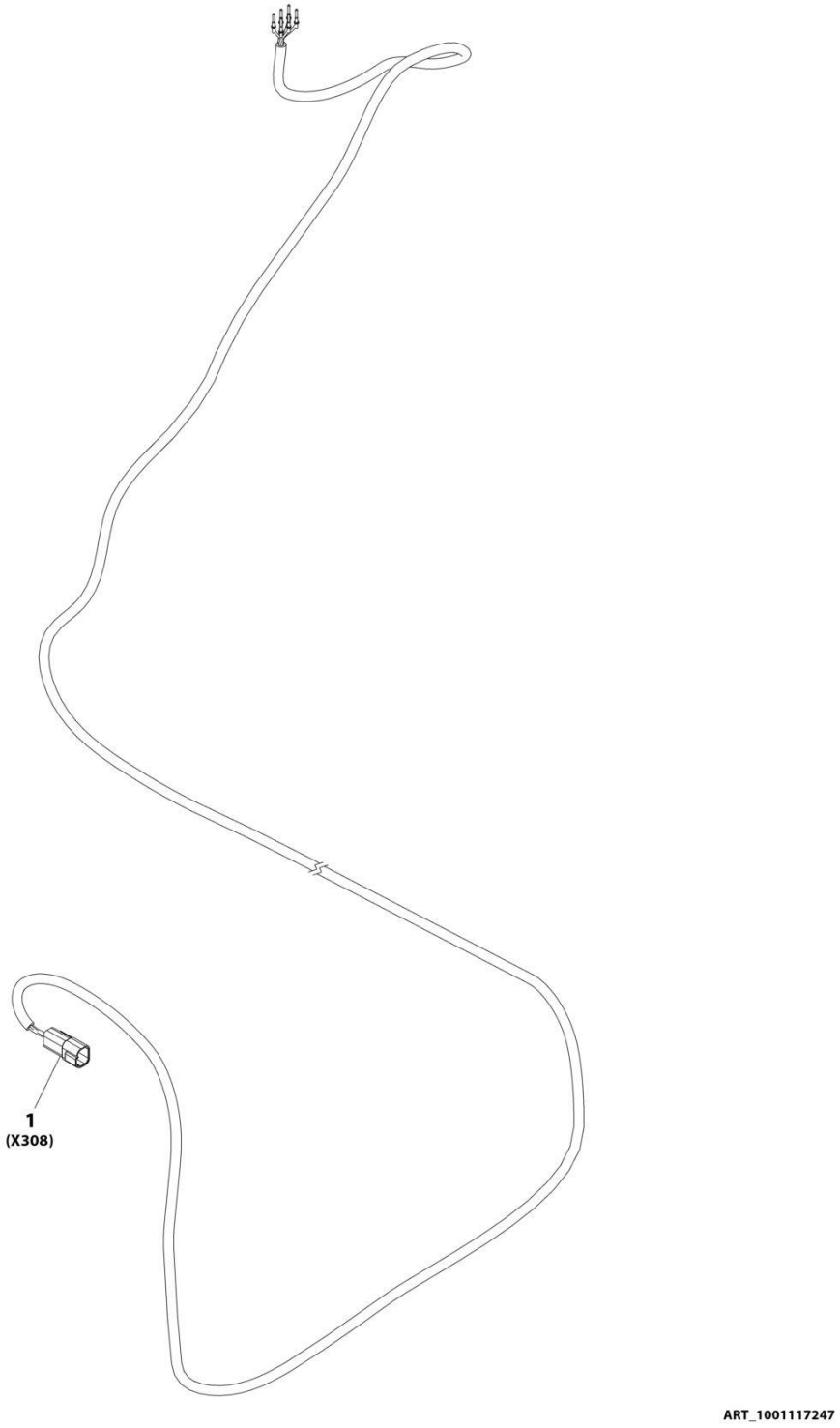

FIGURE 10-66. LMIS BEACON OPTION HARNESS

ITEM	PART NUMBER	QTY	DESCRIPTION	REV
	1001117247	Ref	LMIS Beacon Option Harness	D
1	4460932	1	Connector	

FIGURE 10-67. LMIS BOOM HARNESS

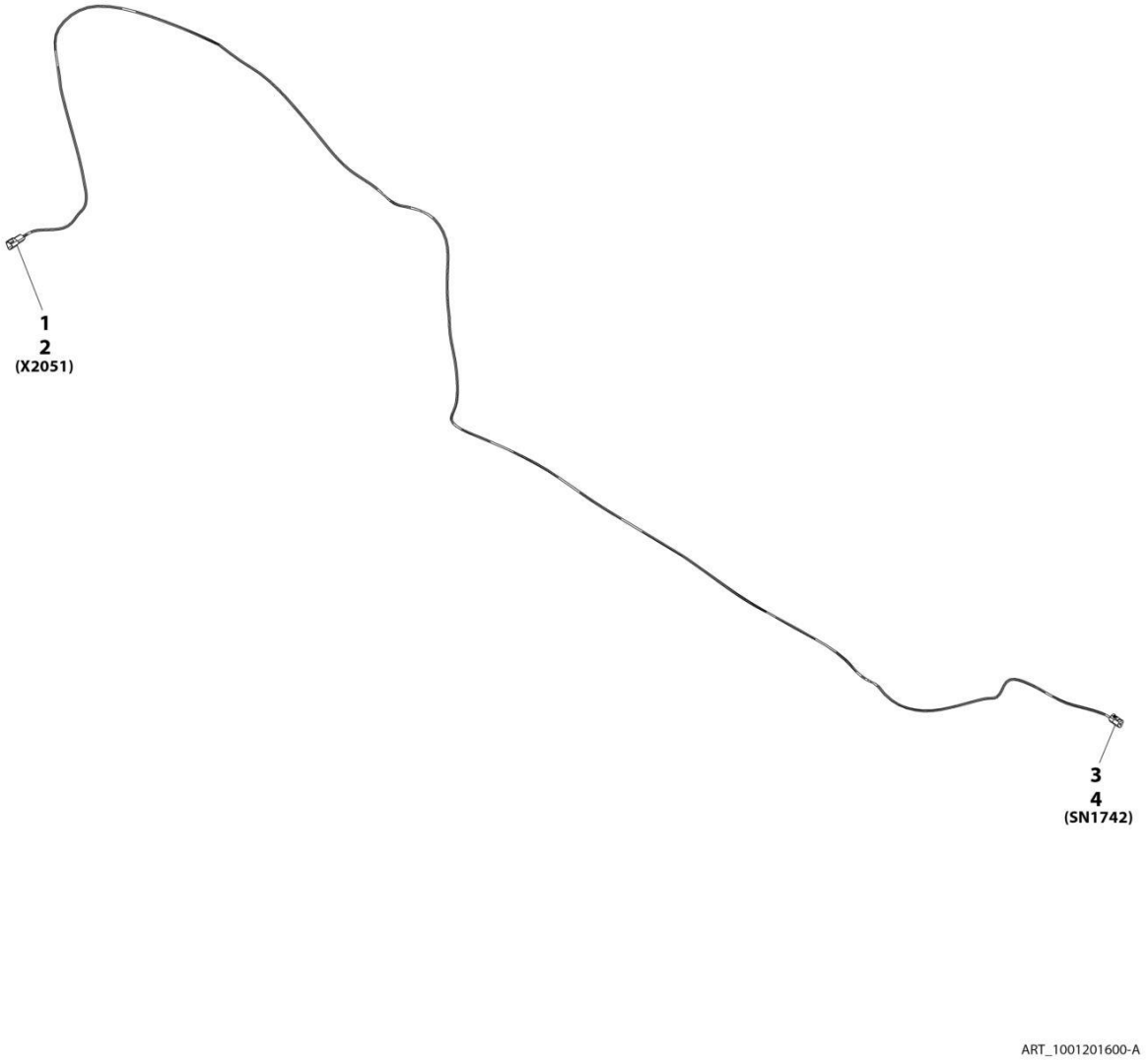

FIGURE 10-67. LMIS BOOM HARNESS

ITEM	PART NUMBER	QTY	DESCRIPTION	REV
	1001201600	Ref	LMIS Boom Harness	A
1	4460536	1	Connector	
2	4460464	3	Terminal	
3	4460539	1	Connector	
4	4460465	3	Terminal	

FIGURE 10-68. LMIS CABLE REEL INSTALLATION

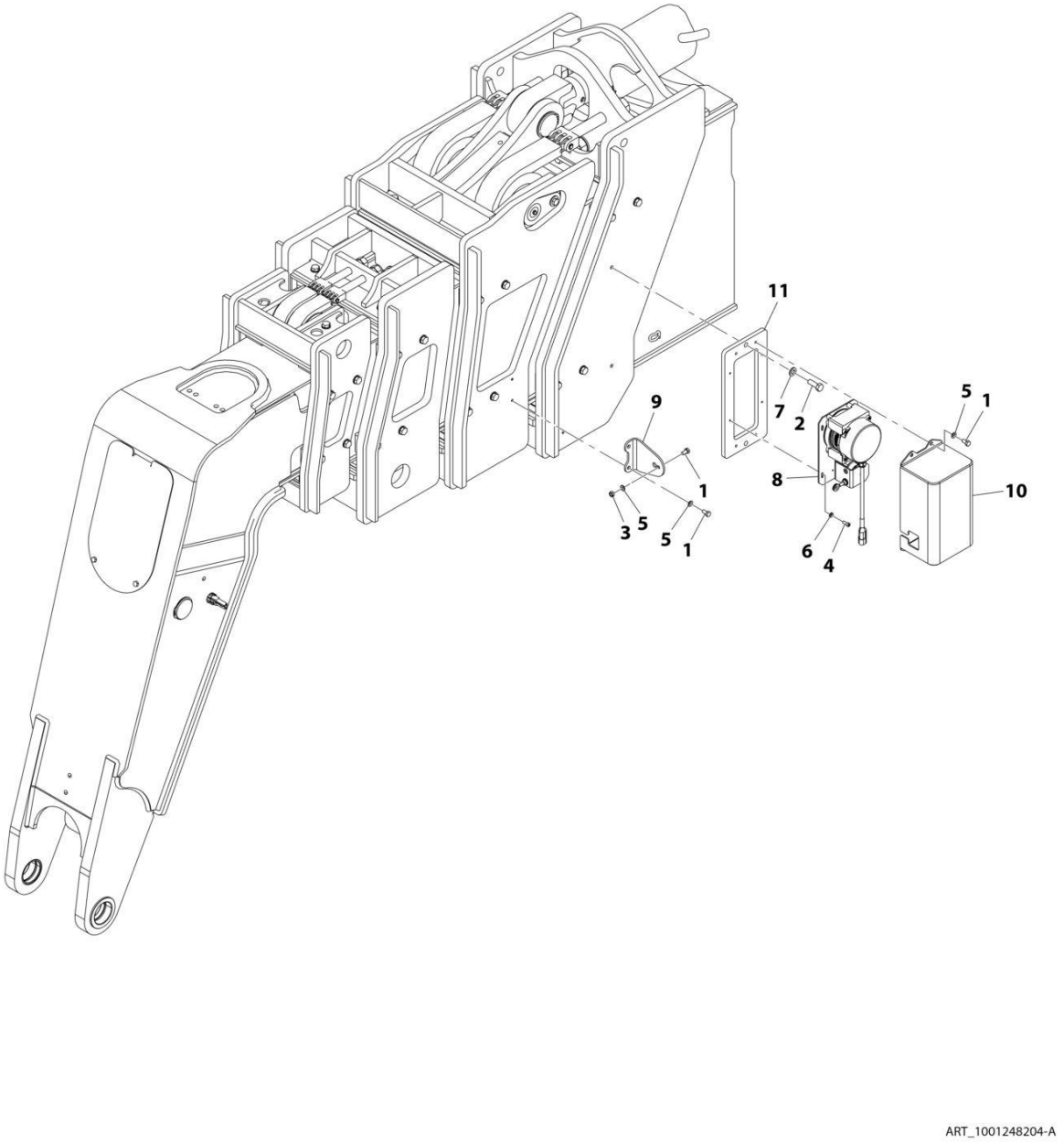

FIGURE 10-68. LMIS CABLE REEL INSTALLATION

ITEM	PART NUMBER	QTY	DESCRIPTION	REV
	1001248204	Ref	LMIS Cable Reel Installation	A
1	0760808	7	Bolt, M8X16	
2	0761215	2	Bolt, M12X35	
3	3290801	1	Nut, M8X1.25	
4	4031707	4	Bolt, M6X16	
5	4811900	7	Washer, M8	
6	5240600	4	Washer, M6	
7	1001125117	2	Washer, M12	
8	1001223903	1	Sensor, Boom Length	
9	1001224127	1	Bracket	
10	1001224128	1	Panel	
11	1001244334	1	Plate	

FIGURE 10-69. LMIS CHASSIS OPTION HARNESS

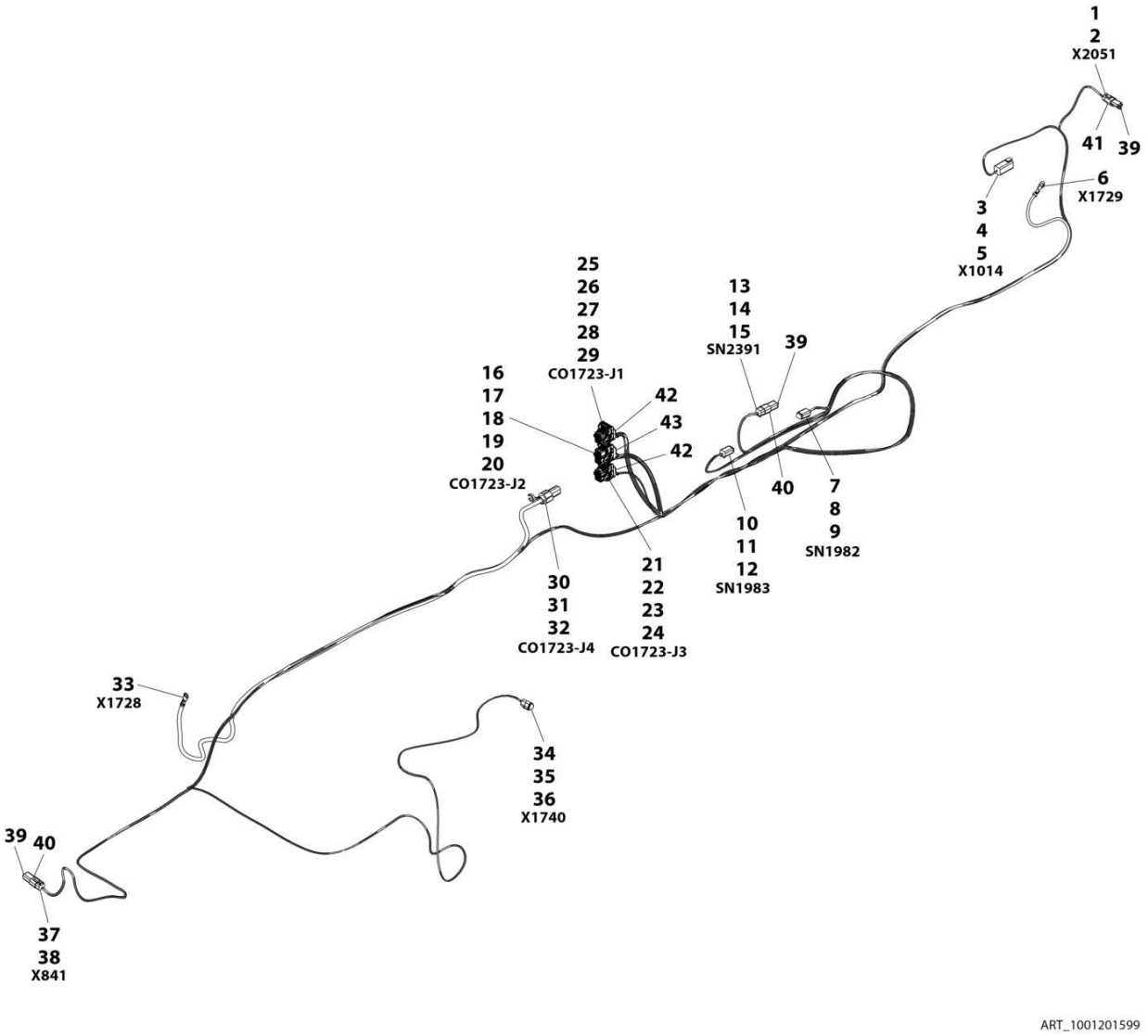

FIGURE 10-69. LMIS CHASSIS OPTION HARNESS

ITEM	PART NUMBER	QTY	DESCRIPTION	REV
	1001201599	Ref	LMIS Chassis Option Harness	D
1	4460539	1	Connector	
2	4460465	3	Terminal	
3	4460899	1	Connector	
4	4460466	4	Plug	
5	4460464	2	Terminal	
6	1001187080	1	Ring Terminal	
7	4460884	1	Connector	
8	4460942	1	Terminal	
9	4460465	3	Terminal	
10	4460884	1	Connector	
11	4460942	1	Terminal	
12	4460465	3	Terminal	
13	4460884	1	Connector	
14	4460942	1	Terminal	
15	4460465	3	Terminal	
16	1001161963	1	Connector	
17	1001161097	16	Terminal	
18	1001161100	24	Plug	
19	1001161099	3	Terminal	
20	1001161101	5	Plug	
21	1001160500	1	Connector	
22	1001161100	22	Plug	
23	1001161097	2	Terminal	
24	1001161101	8	Plug	
25	1001161957	1	Connector	
26	1001161097	11	Terminal	
27	1001161100	13	Plug	
28	1001161101	5	Plug	
29	1001161099	3	Terminal	
30	1001160509	1	Connector	
31	1001160510	1	Terminal	
32	1001175267	1	Seal	
33	1001187075	1	Ring Terminal	
34	1001116812	1	Connector	
35	4460944	2	Terminal	
36	4460466	1	Plug	
37	4460884	1	Connector	
38	4460465	4	Terminal	
39	4460466	11	Plug	
40	4460932	2	Connector	
41	4460536	1	Terminal, 3 Pin Male	
42	643191201	2	Cover	
43	643191301	1	Cover	

FIGURE 10-70. LMIS TILT SENSOR INSTALLATION

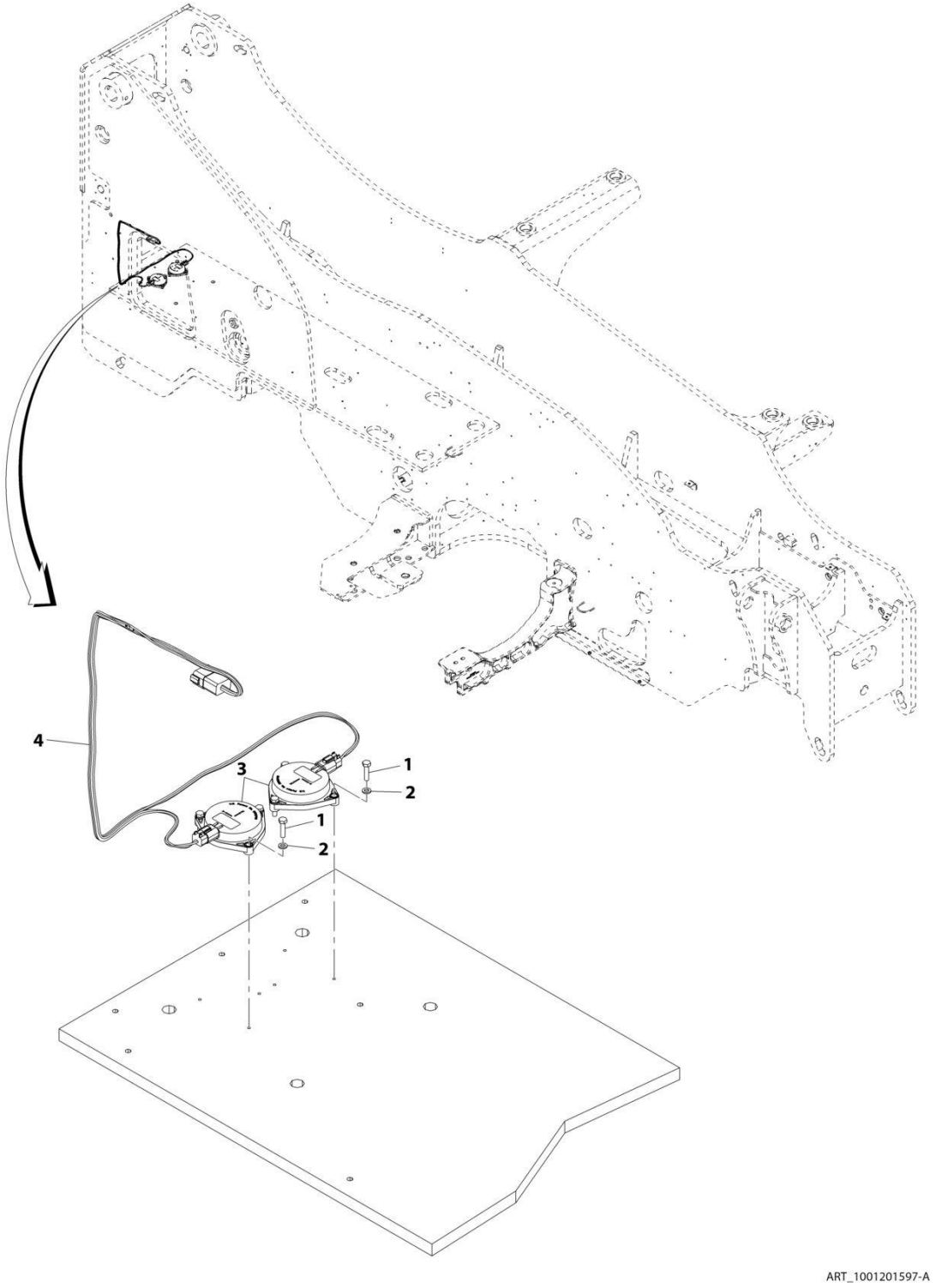

FIGURE 10-70. LMIS TILT SENSOR INSTALLATION

ITEM	PART NUMBER	QTY	DESCRIPTION	REV
	1001201597	Ref	Tilt Sensor Installation	A
1	0700612	6	Bolt, M6X25	
2	4811700	6	Washer, M6	
3	1001163095	2	Sensor, Tilt	
4	1001201601	1	Harness, Platform Ready (See Separate Breakdown in this Section)	

FIGURE 10-71. LSI INSTALLATION

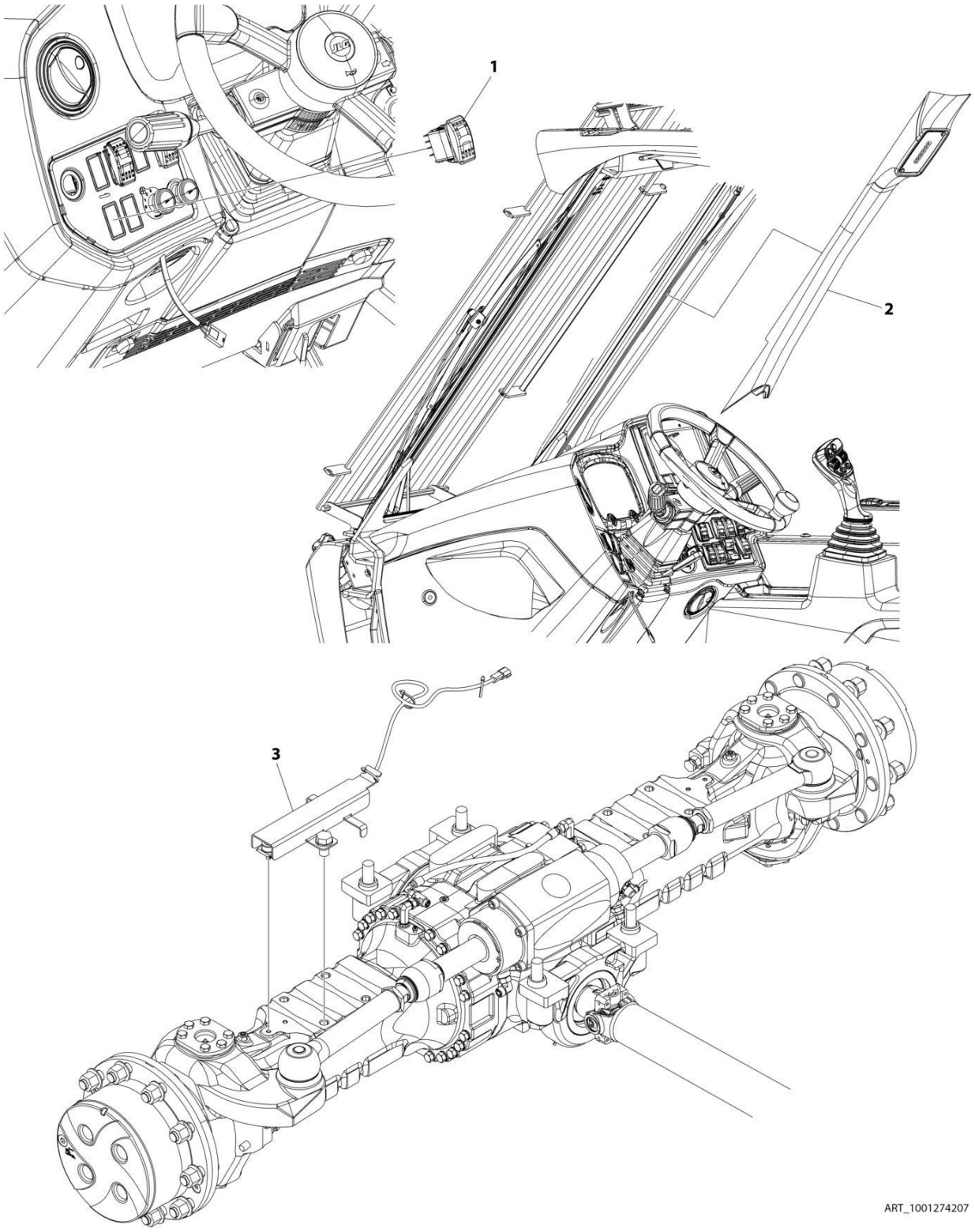

FIGURE 10-71. LSI INSTALLATION

ITEM	PART NUMBER	QTY	DESCRIPTION	REV
	1001274207	Ref	LSI INSTALLATION	A
1	1001159742	1	Switch, LSI Override	
2	1001207594	Ref	Installation, LSI Display (See Separate Breakdown in this Section)	
3	1001258820	Ref	Installation, LSI Sensor (See Separate breakdown in this Section)	

FIGURE 10-72. LSI DISPLAY INSTALLATION

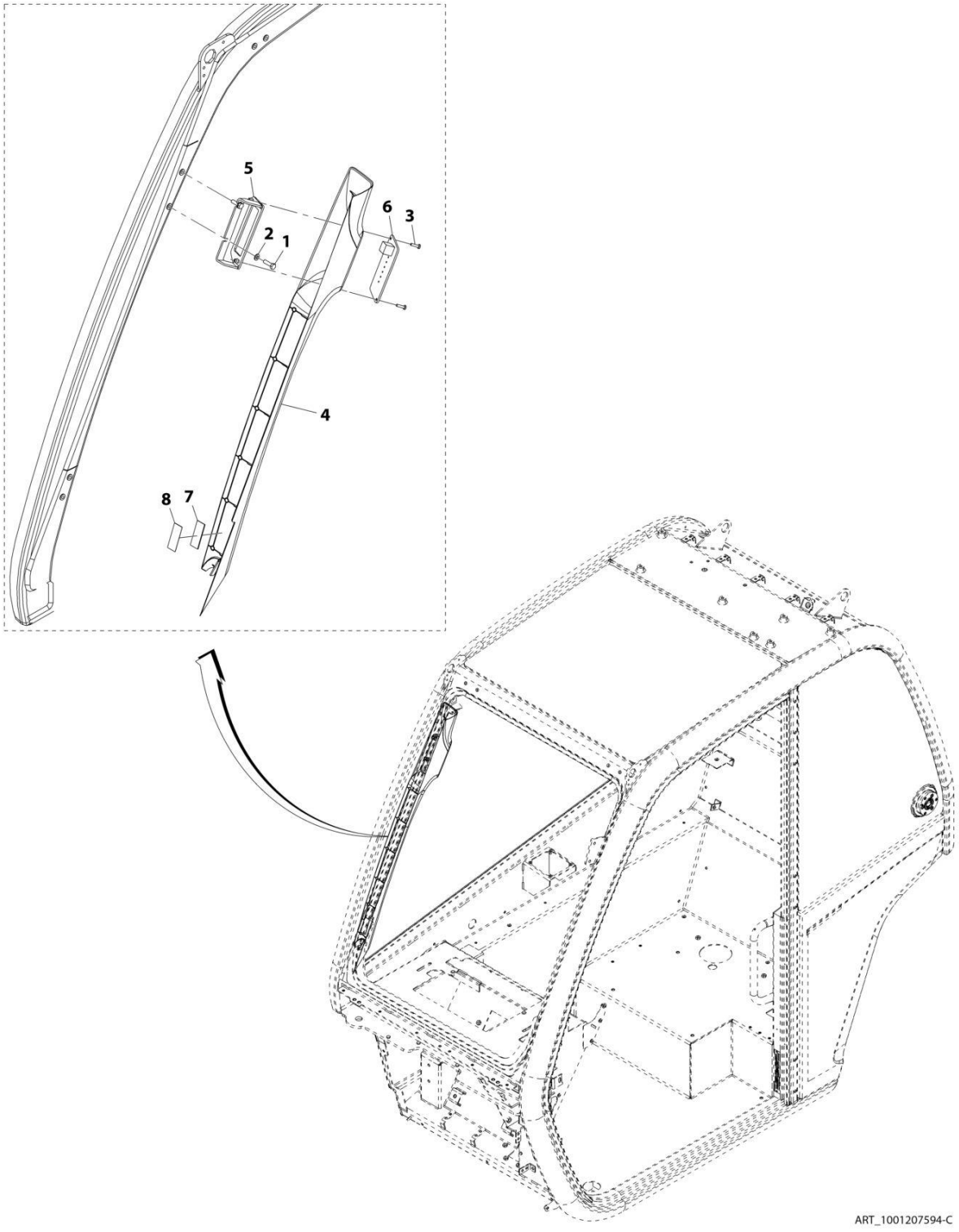

FIGURE 10-72. LSI DISPLAY INSTALLATION

ITEM	PART NUMBER	QTY	DESCRIPTION	REV
	1001207594	Ref	LSI Display Installation	C
1	0760610	2	Bolt, M6X20	
2	4811700	2	Washer, M6	
3	1001126837	2	Screw, M4X16	
4	1001182839	1	Cover	
5	1001214401	1	Bracket	
6	1001213752	1	Display, LSI	
7	1001221318	1	Tape, Hook Fastener	
8	1001221319	1	Tape, Hook Fastener	

FIGURE 10-73. LSI SENSOR INSTALLATION

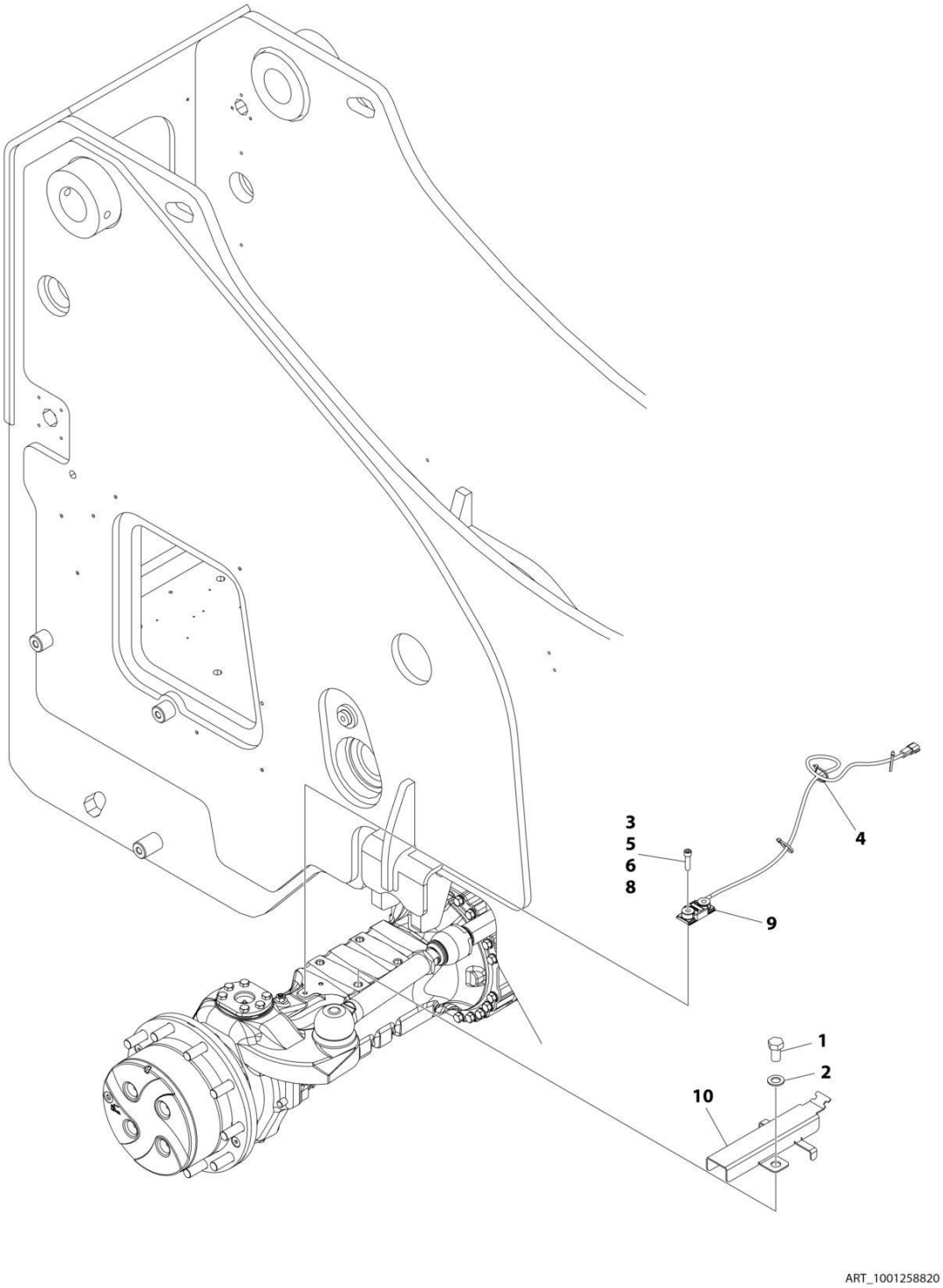

FIGURE 10-73. LSI SENSOR INSTALLATION

ITEM	PART NUMBER	QTY	DESCRIPTION	REV
	1001258820	Ref	LSI SENSOR INSTALLATION	A
1	0762015	1	Bolt M20 x 35	
2	4812500	1	Washer M20	
3	5272012	2	Bolt M10 x 40	
4	1001008559	3	Strap, Cable	
5	1001116128	AR	Seal	
6	1001125465	AR	Locking, Compound	
7	1001129423	1	Sensor Installation (Not Shown - Includes Items 3, 5, 6, 8 & 9)	
8	1001129425	AR	Adhesive	
9	1001160730	1	Sensor, Rear Axle	
10	1001258821	1	Bracket, LSI Cover	

FIGURE 10-74. PLATFORM HARNESS

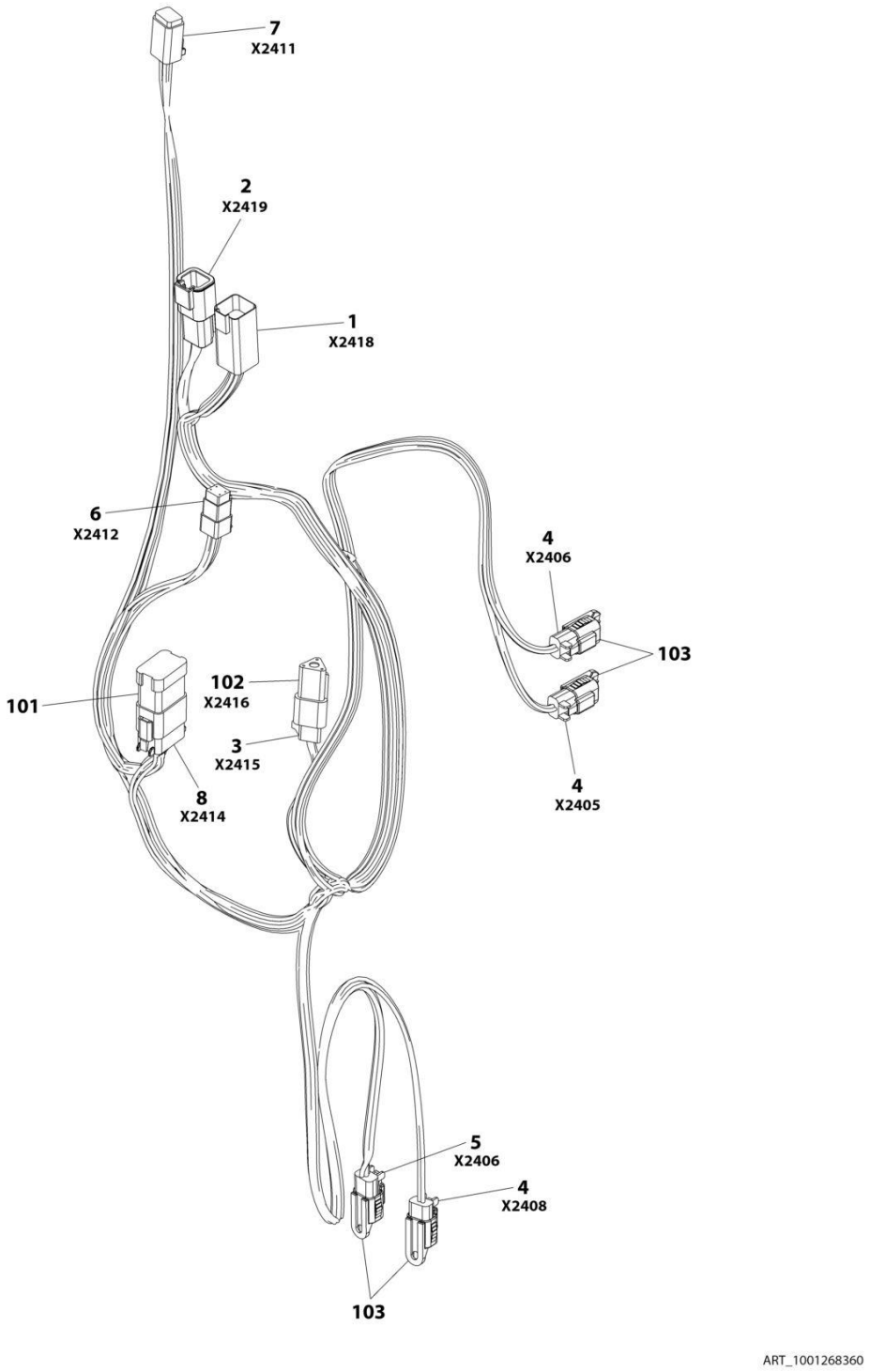

FIGURE 10-74. PLATFORM HARNESS

ITEM	PART NUMBER	QTY	DESCRIPTION	REV
	1001268360	Ref	PLATFORM HARNESS	A
1	4460899	1	Connector	
1	4460943	2	Pin, Male	
1	4460464	4	Pin, Male	
2	4461017	1	Connector	
2	1001150610	2	Terminal	
3	4461095	1	Plug, Male - 3 Position	
3	4460944	2	Socket, Female	
3	4460466	1	Plug, Terminal	
4	4460891	3	Plug, Male - 2 Position	
4	4460465	6	Socket, Female	
5	4460891	1	Plug, Male - 2 Position	
5	4460942	2	Socket, Female	
6	4461077	1	Connector - 4 Position	
6	1001126008	4	Terminal	
7	4460884	1	Plug, Male - 4 Position	
7	4460465	4	Socket, Female	
8	4460930	1	Plug, Male - 8 Position	
8	4460465	8	Socket, Female	
101	4460984	1	Plug - 4 Position	
102	4461070	1	Bussbar - 3 Position	
103	1001155806	4	Dust Cap	

FIGURE 10-75. PLATFORM READY HARNESS

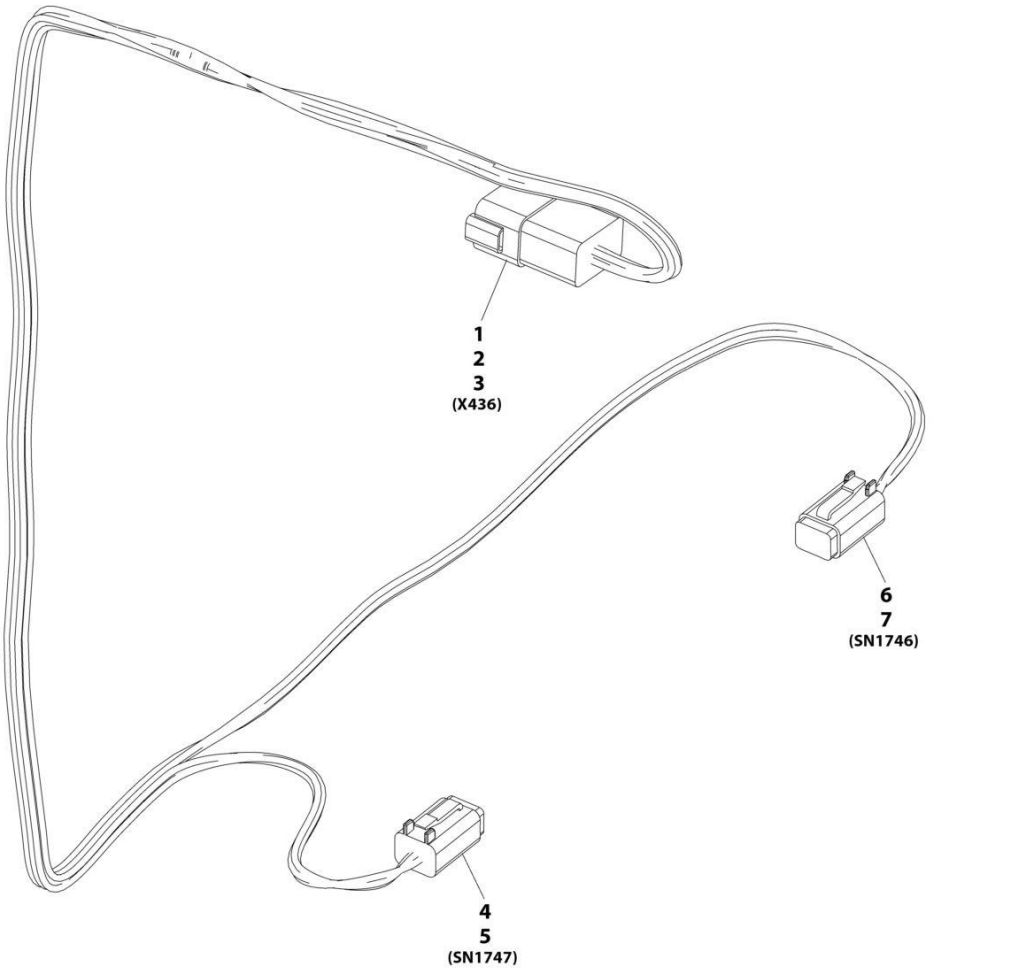

FIGURE 10-75. PLATFORM READY HARNESS

ITEM	PART NUMBER	QTY	DESCRIPTION	REV
	1001201601	Ref	Platform Ready Harness	A
1	4460931	1	Connector	
2	4460464	6	Terminal	
3	4460466	2	Plug	
4	4460884	1	Connector	
5	4460944	4	Terminal	
6	4460884	1	Connector	
7	4460944	4	Terminal	

FIGURE 10-76. REVERSE CAMERA INSTALLATION

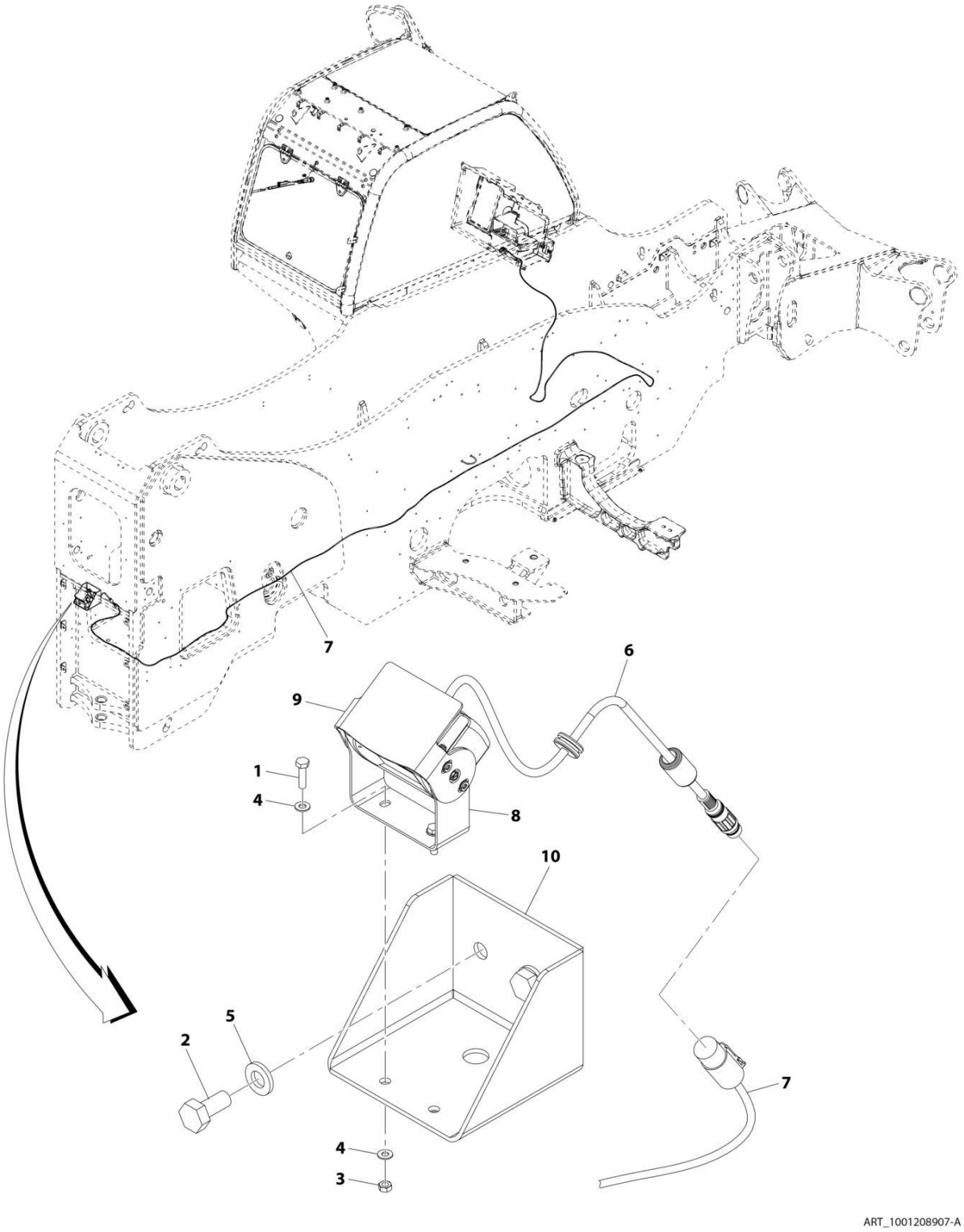

FIGURE 10-76. REVERSE CAMERA INSTALLATION

ITEM	PART NUMBER	QTY	DESCRIPTION	REV
	1001208907	Ref	Reverse Camera Installation	A
1	0700408	2	Bolt, M4X16	
2	0701011	2	Bolt, M10X22	
3	3290401	2	Nut, M4X0.7	
4	4811400	4	Washer, M4	
5	5241000	2	Washer, M10	
6	1001167017	1	Camera, Reverse	
7	1001171962	1	Cable, Reverse Camera	
8	1001202621	1	Bracket, Reverse Camera Mount	
9	1001202622	1	Bracket, Reverse Sun Shield	
10	1001208908	1	Bracket, Reverse Camera Mount	

FIGURE 10-77. REVERSE SENSOR INSTALLATION

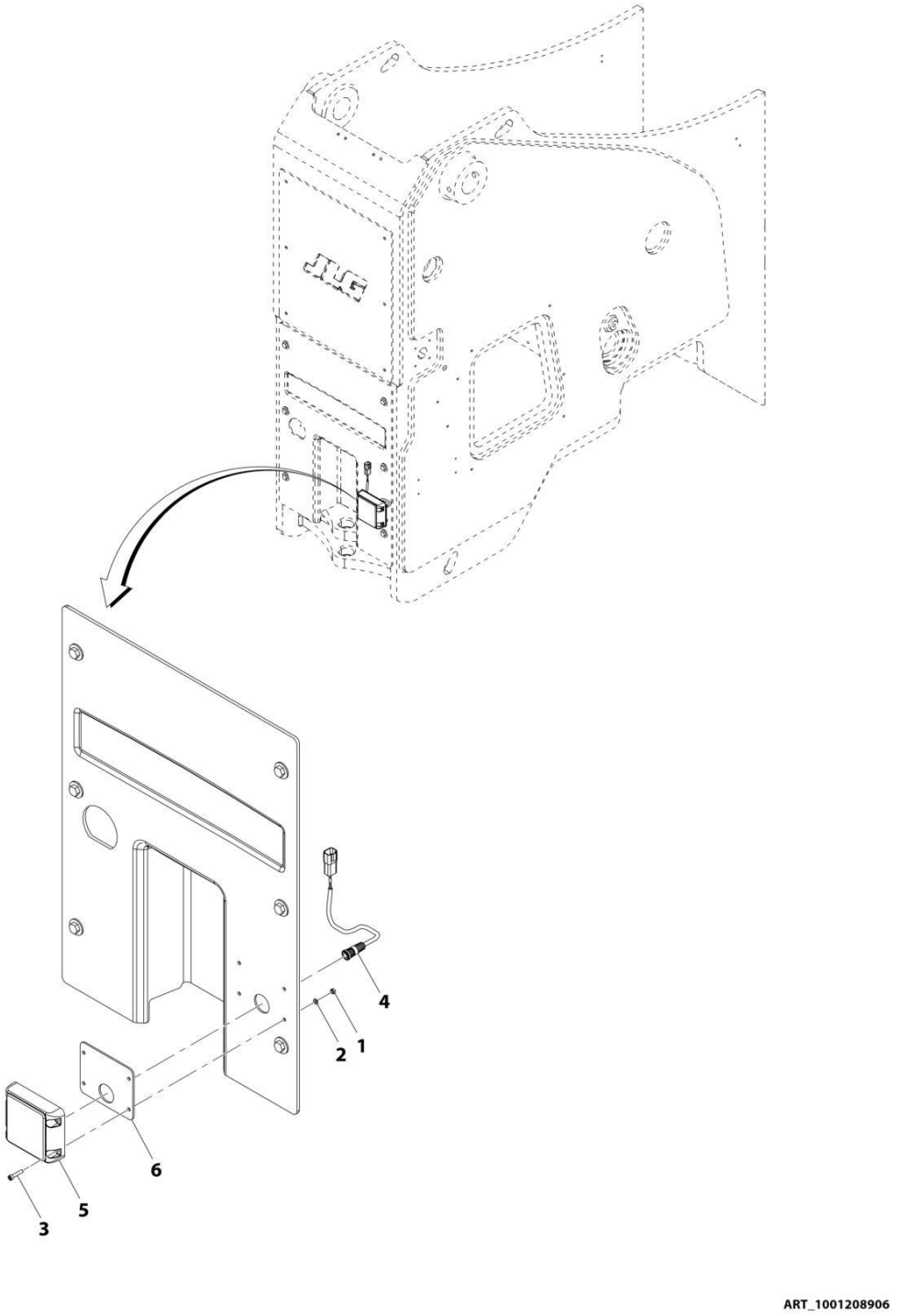

FIGURE 10-77. REVERSE SENSOR INSTALLATION

ITEM	PART NUMBER	QTY	DESCRIPTION	REV
	1001208906	Ref	REVERSE SENSOR INSTALLATION	D
1	3290501	4	Nut M5	
2	4811600	4	Washer M5	
3	5271609	4	Screw M5 x 25	
4	1001175776	1	Harness, Reverse Sensor (See Separate Breakdown in this Section)	
5	1001247421	1	Sensor, Reverse	
6	1001251518	1	Plate	

FIGURE 10-78. REVERSE SENSOR HARNESS

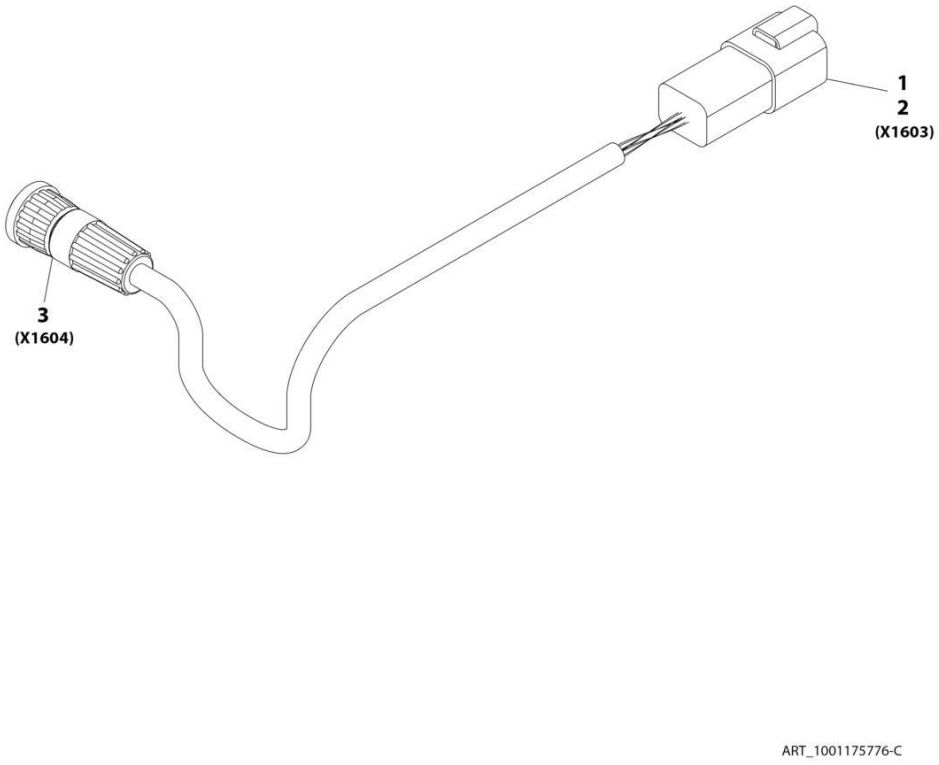

FIGURE 10-78. REVERSE SENSOR HARNESS

ITEM	PART NUMBER	QTY	DESCRIPTION	REV
	1001175776	Ref	Reverse Sensor Harness	C
1	4460932	1	Connector	
2	4460464	4	Terminal	
3	1001175733	1	Connector	

FIGURE 10-79. REVERSING FAN HARNESS

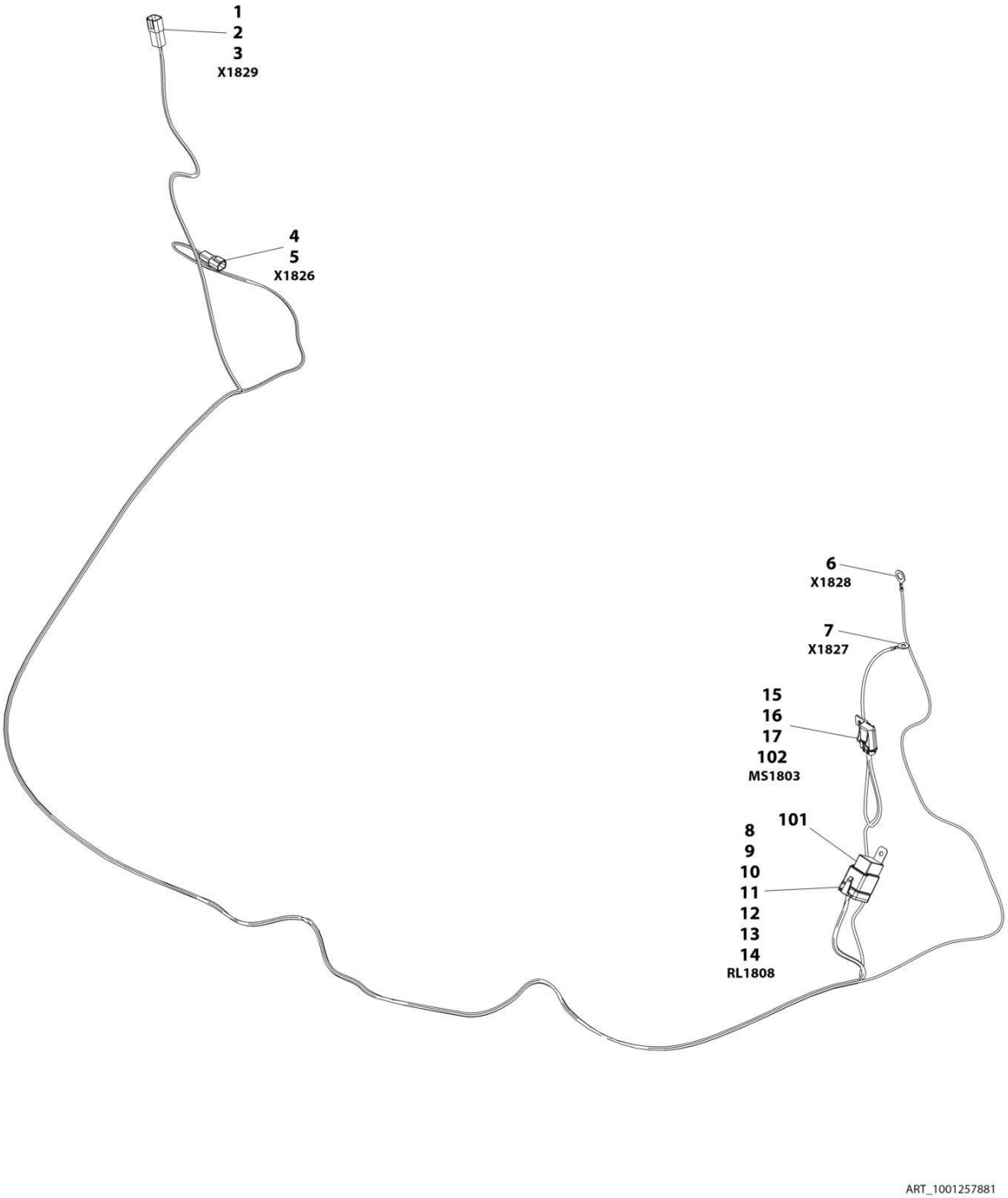

FIGURE 10-79. REVERSING FAN HARNESS

ITEM	PART NUMBER	QTY	DESCRIPTION	REV
	1001257881	Ref	FAN HARNESS	A
1	4460932	1	Connector	
2	4460941	2	Terminal	
3	4460466	2	Plug	
4	4460897	1	Connector	
5	4460464	2	Terminal	
6	1001187078	1	Ring Terminal	
7	1001207171	1	Ring Terminal	
8	1001231398	1	Connector	
9	1001231401	2	Terminal	
10	1001231402	1	Seal	
11	1001231399	2	Terminal	
12	1001231404	2	Seal	
13	1001231406	1	Plug	
14	1001231403	1	Seal	
15	1001231397	1	Connector	
16	1001231401	2	Terminal	
17	1001231402	2	Seal	
101	3740080	1	Relay	
102	8229237	1	Fuse, 15 AMP	

FIGURE 10-80. RIGHT SIDE CAMERA INSTALLATION

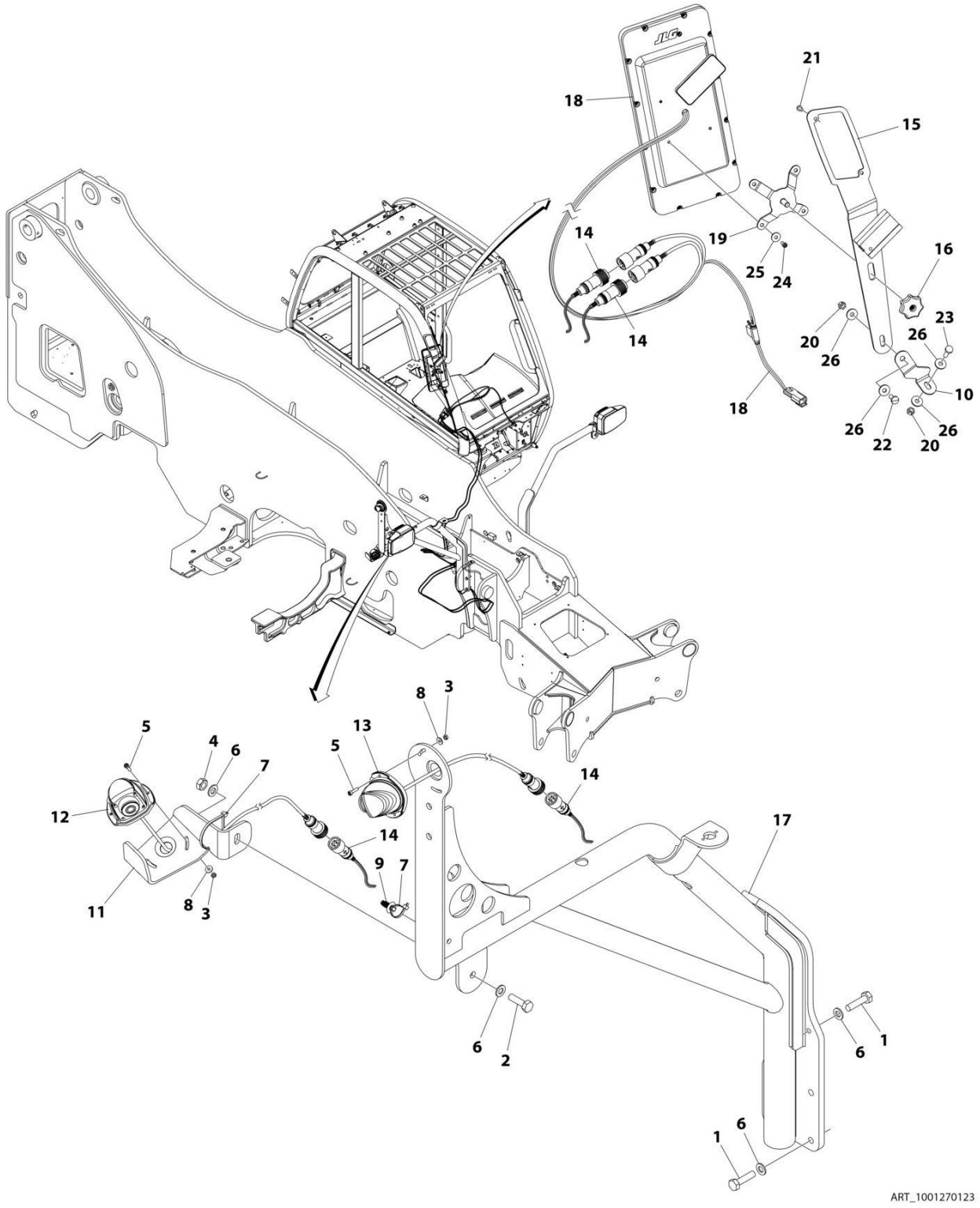

FIGURE 10-80. RIGHT SIDE CAMERA INSTALLATION

ITEM	PART NUMBER	QTY	DESCRIPTION	REV
	1001270123	Ref	CAMERA INSTALLATION	A
1	0701016	6	Bolt M10 x 40	
2	0761015	1	Bolt M10 x 35	
3	3290401	4	Nut M4 x 0.7	
4	3291001	1	Nut M10 x 1.5	
5	4031507	4	Bolt M4 x 16	
6	4812000	8	Washer M10	
7	1001008559	2	Tie-Strap	
8	1001091102	4	Washer M4	
9	1001202986	1	Strap, Push Mount	
10	1001260274	1	Plate, Display Bracket	
11	1001260580	1	Plate, Camera Bracket	
12	1001260685	1	Camera, Normal View	
13	1001260686	1	Camera, Mirror View	
14	1001260687	2	Cable, Extension	
15	1001260701	1	Bracket, Display	
16	1001265007	1	Knob, Display	
17	1001265347	1	Bracket, Camera	
18	1001265544	1	Display	
18	70031049	1	Control, Remote (Not Shown)	
19	1001271256	1	Mount, Display	
20	3290605001	2	Nut M6 x 1	
21	4010410002	2	Screw	
22	4010608002	1	Screw	
23	4010610002	1	Screw M6 x 20	
24	4031505001	4	Bolt M4 x 10	
25	4811602001	4	Washer M5	
26	4811702001	4	Washer M6	

FIGURE 10-81. MULTI VIEW CAMERA INSTALLATION

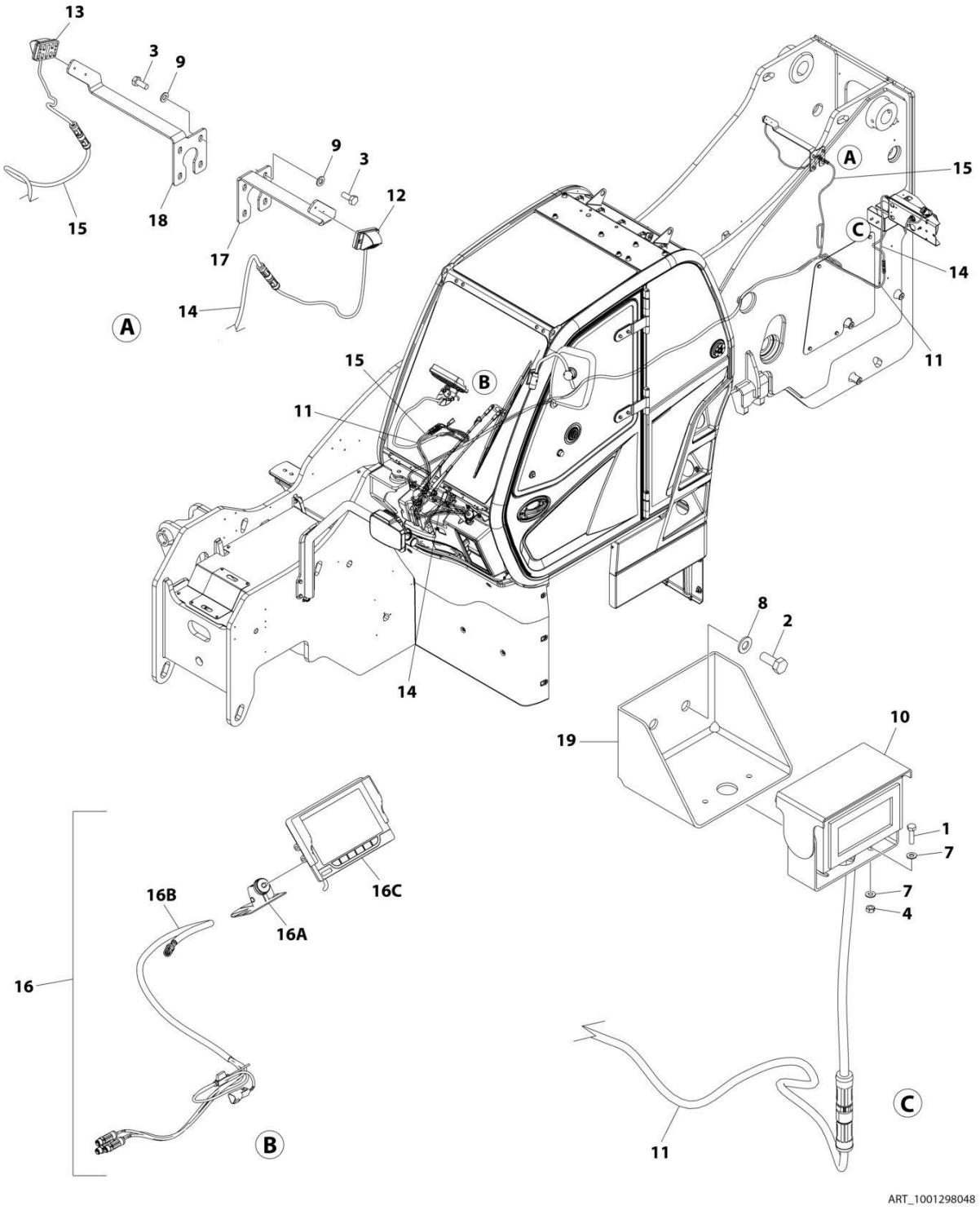

FIGURE 10-81. MULTI VIEW CAMERA INSTALLATION

ITEM	PART NUMBER	QTY	DESCRIPTION	REV
	1001298048	Ref	MULTI VIEW CAMERA INSTALLATION	A
1	0700408	2	Bolt M4 x 16	
2	0760810	2	Bolt M8 x 20	
3	0761012	8	Bolt M10 x 25	
4	3290401	2	Nut M4	
5	4240032	AR	Tie-Strap (Not Shown)	
6	4460234	AR	Mount, Tie-Strap (Not Shown)	
7	4811400	4	Washer M4	
8	4811900	2	Washer M8	
9	4812000	8	Washer M10	
10	1001233174	1	Camera, Rear View	
11	1001233434	1	Extension Cable Camera Harness	
12	1001264534	1	Camera, Side View (LH)	
13	1001264536	1	Camera, Side View (RH)	
14	1001265979	1	Extension Cable Camera Harness (LH)	
15	1001265980	1	Extension Cable Camera Harness (RH)	
16	1001289479	1	Quad View Monitor Assembly	
16A	1001233217	1	Bracket	
16B	1001294608	1	Quad View Monitor Harness	
16C	1001302410	1	Monitor LED Display	
17	1001294830	1	Bracket, Side (LH)	
18	1001294831	1	Bracket, Side (RH)	
19	1001295269	1	Bracket, Rear	

FIGURE 10-82. REMOTE BOOM CONTROL INSTALLATION

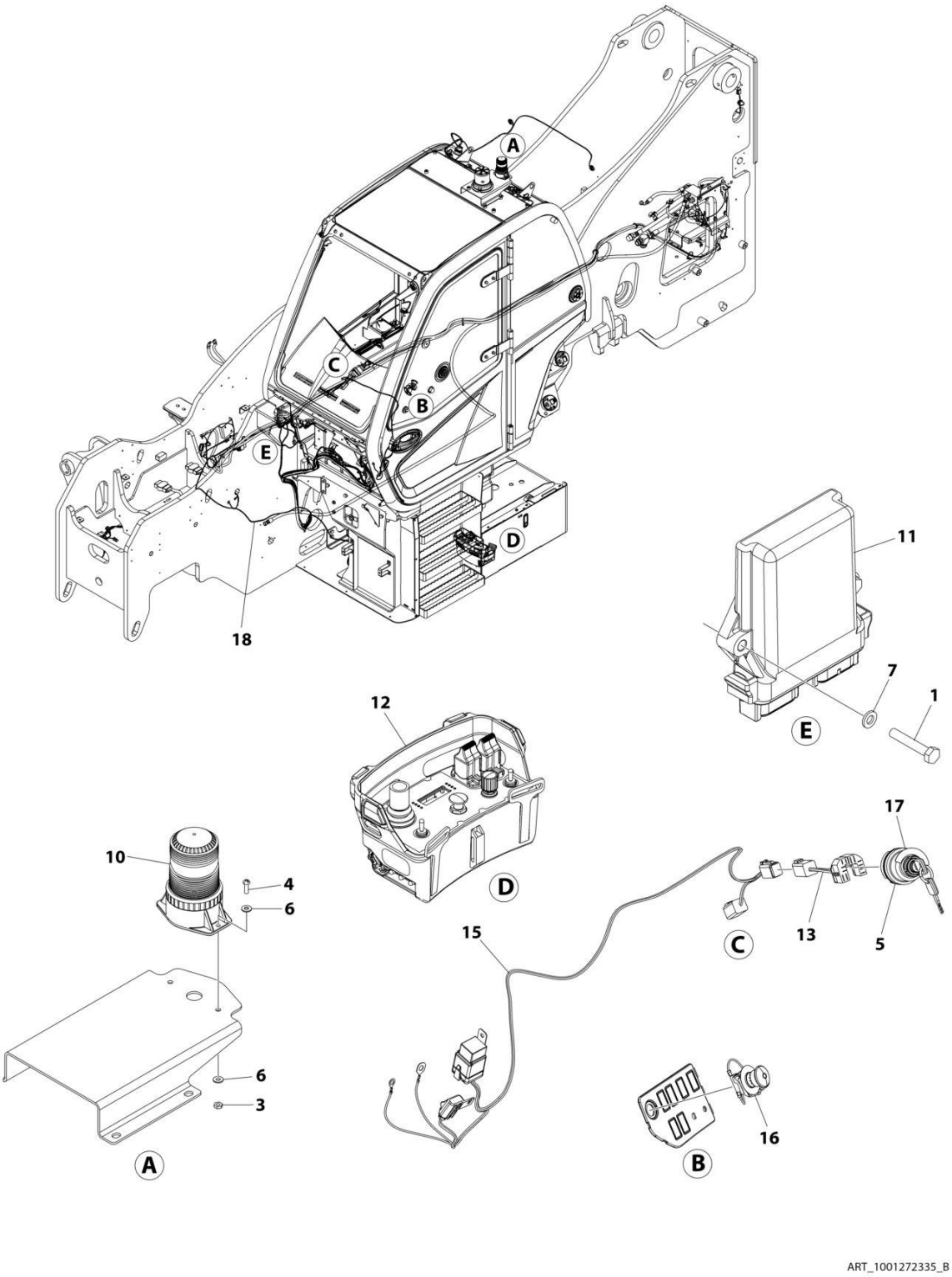

FIGURE 10-82. REMOTE BOOM CONTROL INSTALLATION

ITEM	PART NUMBER	QTY	DESCRIPTION	REV
	1001272335	Ref	REMOTE BOOM CONTROL INSTALLATION	B
1	0760615	2	Bolt M6 x 35	
3	3311005	2	Nut #10	
4	3911010	2	Screw 10 x 5/8	
5	4360657	1	Ignition Switch	
6	4711000	4	Washer #10	
7	4811700	2	Washer M6	
9	1001008559	4	Tie-Strap (Not Shown)	
10	1001200910	1	Lamp, Blue Becaon	
11	1001206112	1	Remote Controller	
12	1001209194	1	Remote Control	
13	1001241610	1	Key Harness	
15	1001259205	1	Remote Control Power Harness (See Separate Breakdown in ELECTRICAL Section)	
16	1001259246	1	Internal Emergency Stop Installation (See Separate Breakdown in ELECTRICAL Section)	
17	1001268354	1	Decal, Ignition Switch	
18	1001270491	1	Emergency Lowering Installation (See Separate Breakdown in HYDRAULIC CIRCUITS Section)	

FIGURE 10-83. REMOTE CONTROL POWER HARNESS

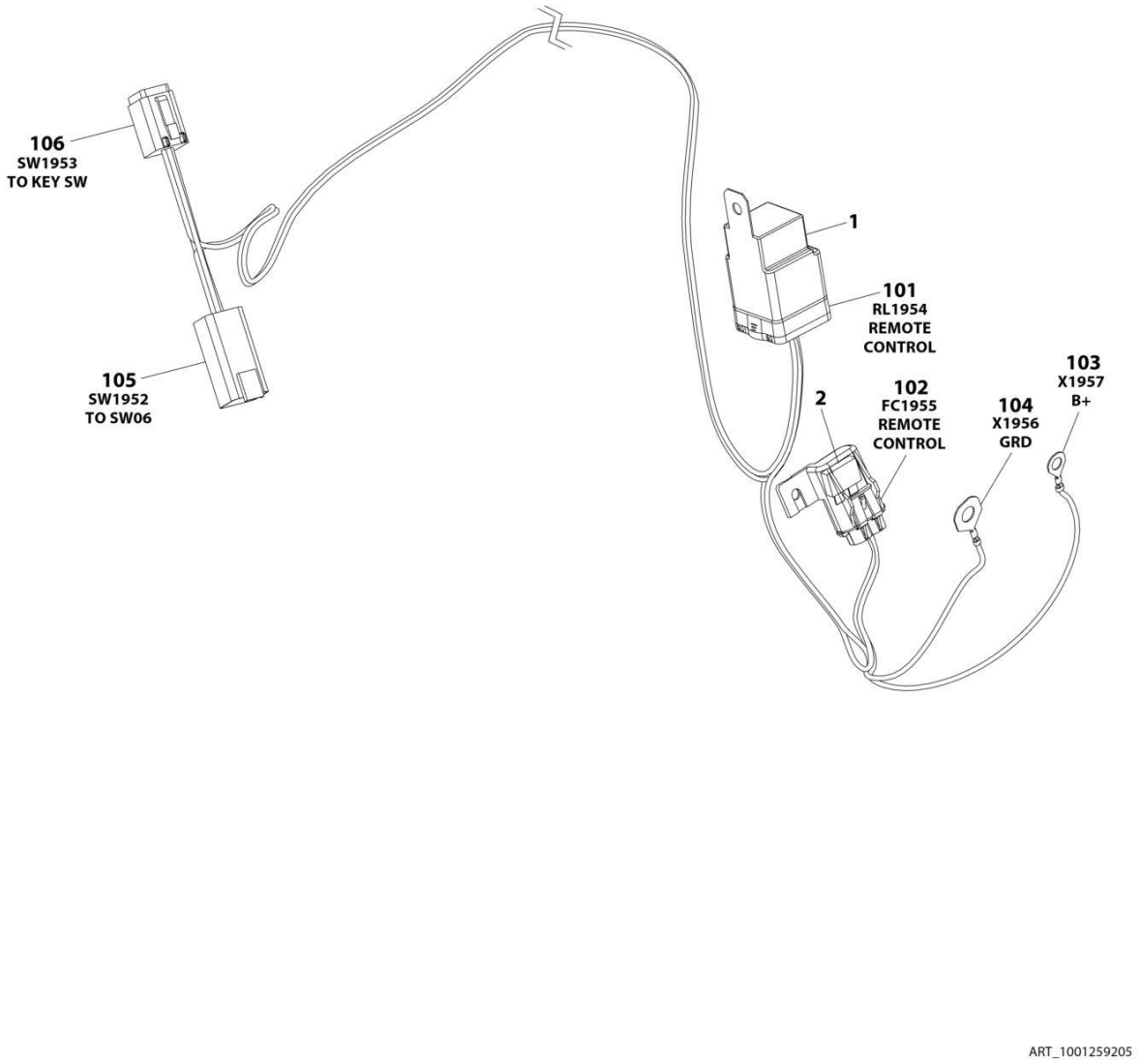

FIGURE 10-83. REMOTE CONTROL POWER HARNESS

ITEM	PART NUMBER	QTY	DESCRIPTION	REV
	1001259205	Ref	Remote Control Power Harness	A
1	3740080	1	Relay	
2	8229234	1	Fuse, 10Amp	
101	1001231398	1	Connector, Relay	
101	1001231400	4	Terminal	
101	1001231404	4	Seal, Terminal	
101	1001231406	1	Plug, Terminal	
102	1001231397	1	Connector - 2 Position	
102	1001231400	2	Terminal	
102	1001231404	2	Seal, Terminal	
103	1001207173	1	Terminal, Ring	
104	1001211775	1	Terminal, Ring	
105	4460899	1	Receptacle, Female - 6 Position	
105	4460464	4	Pin, Male	
105	4460466	2	Plug, Terminal	
106	4460894	1	Plug, Male - 6 Position	
106	4460465	4	Socket, Female	
106	4460466	2	Plug, Terminal	

FIGURE 10-84. REMOTE CONTROL EMERGENCY STOP SWITCH INSTALLATION

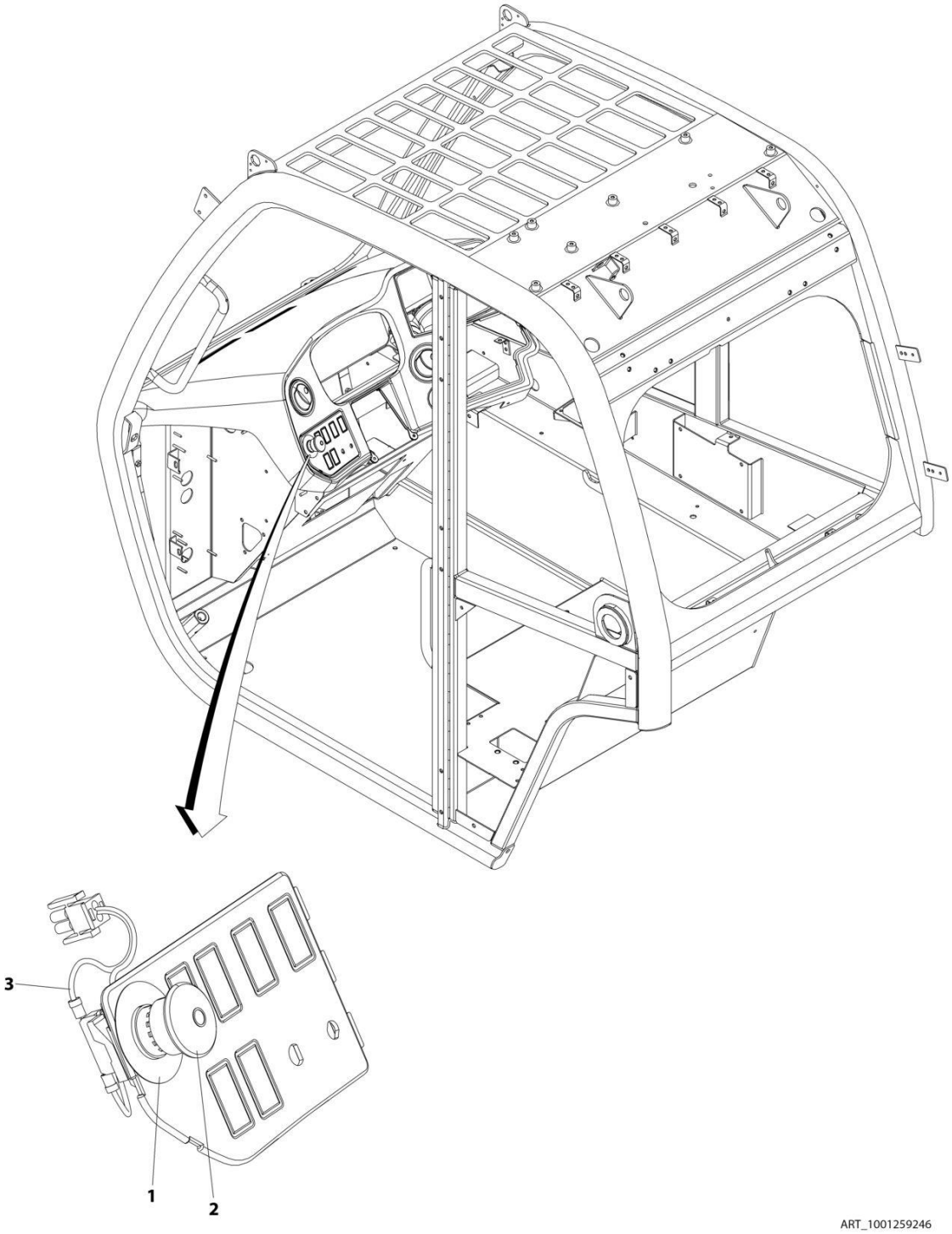

FIGURE 10-84. REMOTE CONTROL EMERGENCY STOP SWITCH INSTALLATION

ITEM	PART NUMBER	QTY	DESCRIPTION	REV
	1001259246	Ref	Remote Control Emergency Stop Switch Installation	A
1	1704260	1	Decal - Emergency Stop	
2	4360475	1	Switch, Emergency Stop	
3	1001259224	1	Harness, EMS Switch	
3	4460320	1	Connector	
3	4460183	2	Terminal	

FIGURE 10-85. TELEMATICS READY INSTALLATION

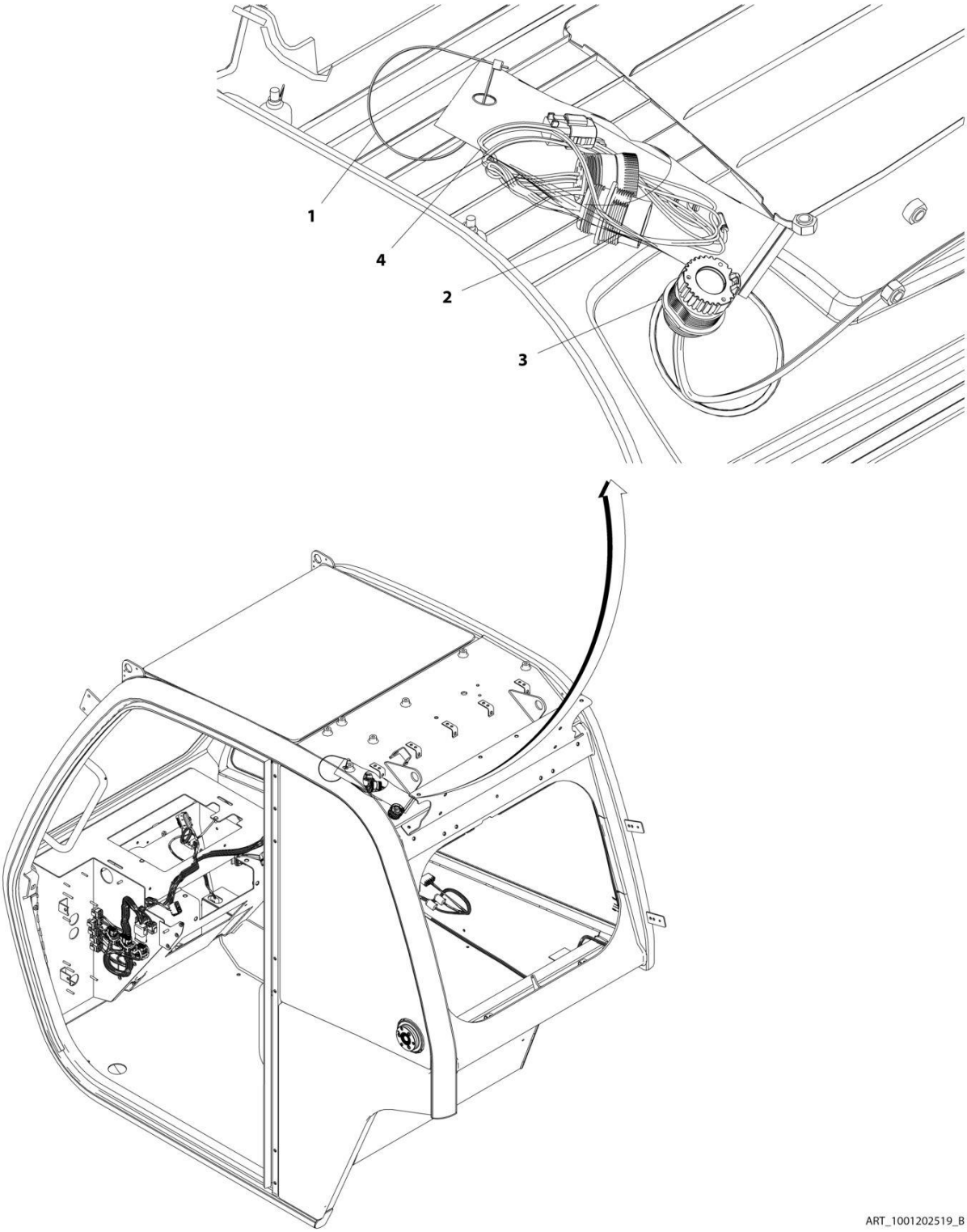

FIGURE 10-85. TELEMATICS READY INSTALLATION

ITEM	PART NUMBER	QTY	DESCRIPTION	REV
	1001202519	Ref	TELEMATICS READY INSTALLATION	B
1	8584003	1	Strap, Tie	
2	1001291182	1	Harness, Telematics Ready (See Separate Breakdown in ELECTRICAL Section)	
3	1001201162	1	Cap	
4	1001202617	1	Bag	

FIGURE 10-86. TELEMATICS READY HARNESS

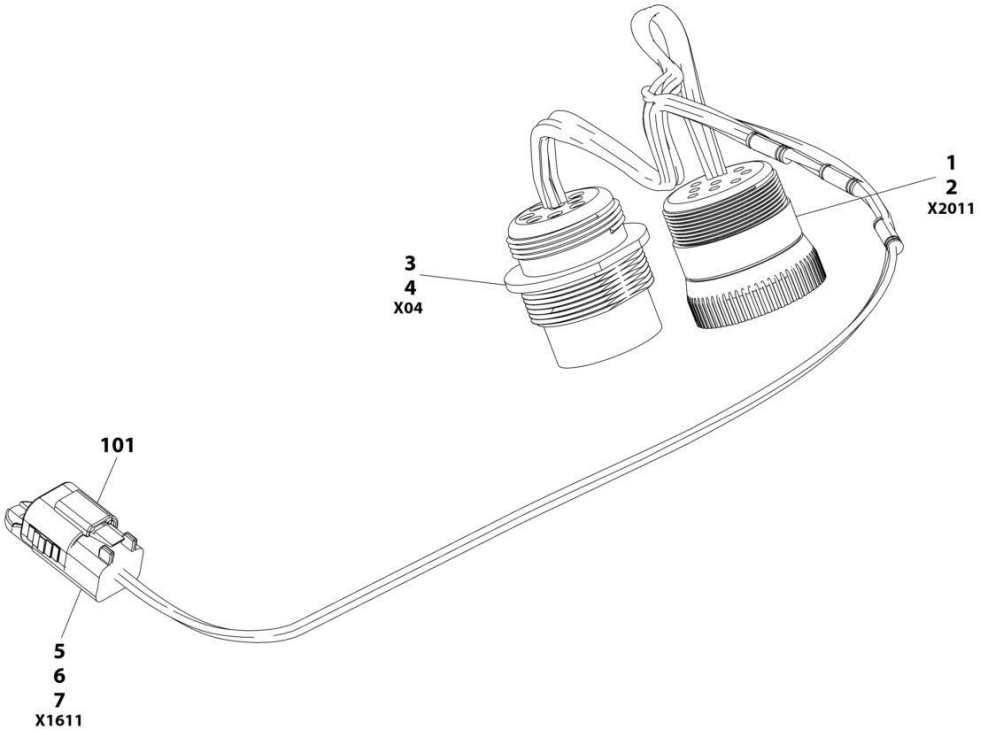

ART_1001291182

FIGURE 10-86. TELEMATICS READY HARNESS

ITEM	PART NUMBER	QTY	DESCRIPTION	REV
	1001291182	Ref	TELEMATICS READY HARNESS	A
1	1001112796	1	Connector	
2	4460465	9	Terminal	
3	1001112612	1	Connector	
4	4460464	9	Terminal	
5	4460884	1	Connector	
6	4460465	3	Terminal	
7	4460466	1	Plug	
101	1001192401	1	Dust Cap	

FIGURE 10-87. TILT SENSOR JUMPER HARNESS

ART_1001256558-A

FIGURE 10-87. TILT SENSOR JUMPER HARNESS

ITEM	PART NUMBER	QTY	DESCRIPTION	REV
	1001256558	Ref	Tilt Sensor Jumper Harness	A
1	1001097051	1	Connector	
2	4460929	4	Terminal	
3	4461077	1	Connector	
4	4460928	4	Terminal	

FIGURE 10-88. TBAP HARNESS

FIGURE 10-88. TBAP HARNESS

ITEM	PART NUMBER	QTY	DESCRIPTION	REV
	1001184835	Ref	TBAP Harness	C
1	10011184495	1	Connector	
	1001260509	4	Terminal	
	1001184496	4	Seal	
2	1001184491	1	Connector	
	1001184493	4	Terminal	

FIGURE 10-89. TELEMATICS GATEWAY INSTALLATION

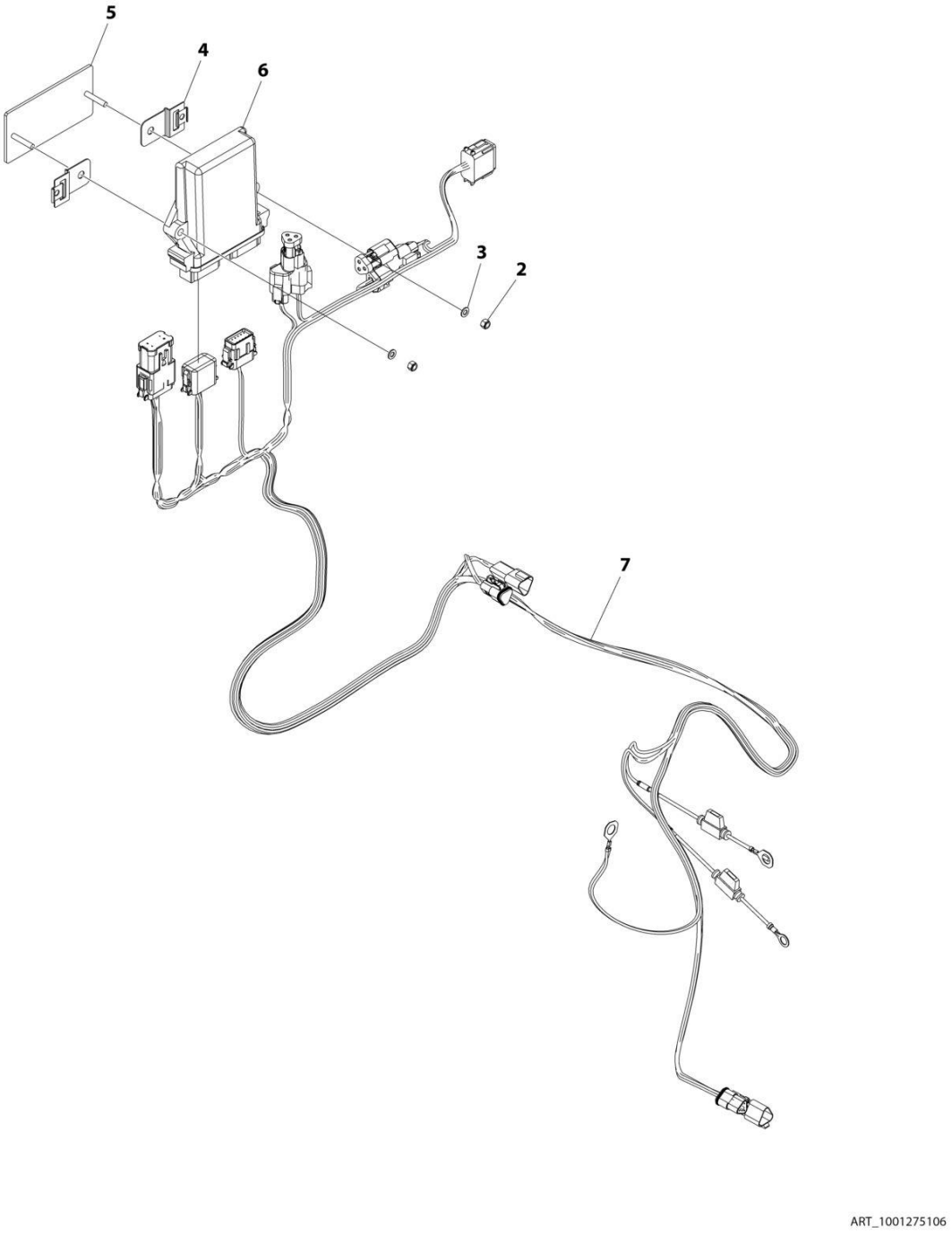

FIGURE 10-89. TELEMATICS GATEWAY INSTALLATION

ITEM	PART NUMBER	QTY	DESCRIPTION	REV
	1001275106	Ref	TELEMATICS GATEWAY INSTALLATION	A
1	1062255	AR	Tie-Strap (Not Shown)	
2	3290505	2	Nut M5	
3	4811600	2	Washer M5	
4	1001153749	2	Clip	
5	1001219082	1	Bracket	
6	1001229458	1	Controller, Gateway	
7	1001275105	1	Harness, Telematics Gateway (See Separate Breakdown in this Section)	

FIGURE 10-90. TELEMATICS GATEWAY HARNESS

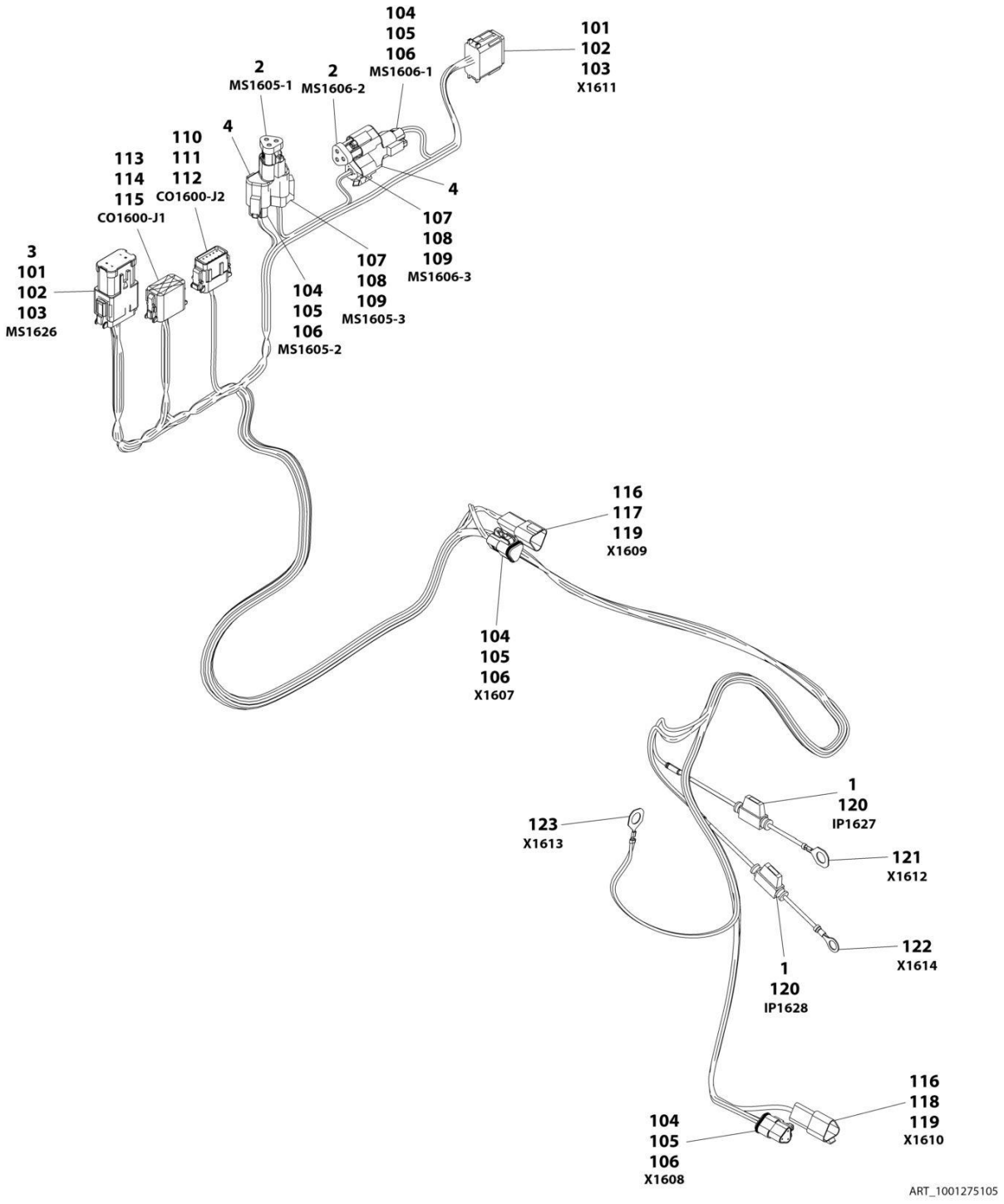

FIGURE 10-90. TELEMATICS GATEWAY HARNESS

ITEM	PART NUMBER	QTY	DESCRIPTION	REV
	1001275105	Ref	TELEMATICS GATEWAY HARNESS	A
1	8229242	2	Fuse, 5AMP	
2	1001116815	2	Connector, Plug - 3 Position	
3	1001200206	1	Connector, Buss - 12 Position	
4	4460945	2	Receptacle, 3 - Way	
101	4460933	2	Connector - 12 Position	
102	4460465	17	Socket, Female	
103	4460466	7	Plug, Terminal	
104	1001116812	4	Plug, Male - 3 Position	
105	4460465	8	Socket, Female	
106	4460466	4	Plug, Terminal	
107	4460539	2	Plug, Male - 3 Position	
108	4460465	4	Socket, Female	
109	4460466	2	Plug, Terminal	
110	1001116808	1	Connector - 12 Position	
111	1001126008	2	Terminal	
112	4460518	10	Plug, Terminal	
113	1001116774	1	Connector - 12 Position	
114	1001126008	6	Terminal	
115	4460518	6	Plug, Terminal	
116	1001144147	2	Receptacle, Female - 3 Position	
117	4460943	2	Pin, Male	
118	4460464	2	Pin, Male	
119	4460466	2	Plug, Terminal	
120	2400060	2	Fuseholder with Cover	
121	1001187078	1	Terminal, Ring	
122	4460670	1	Terminal, Ring	
123	1001187081	1	Terminal, Ring	

FIGURE 10-91. EMERGENCY LOWERING HARNESS

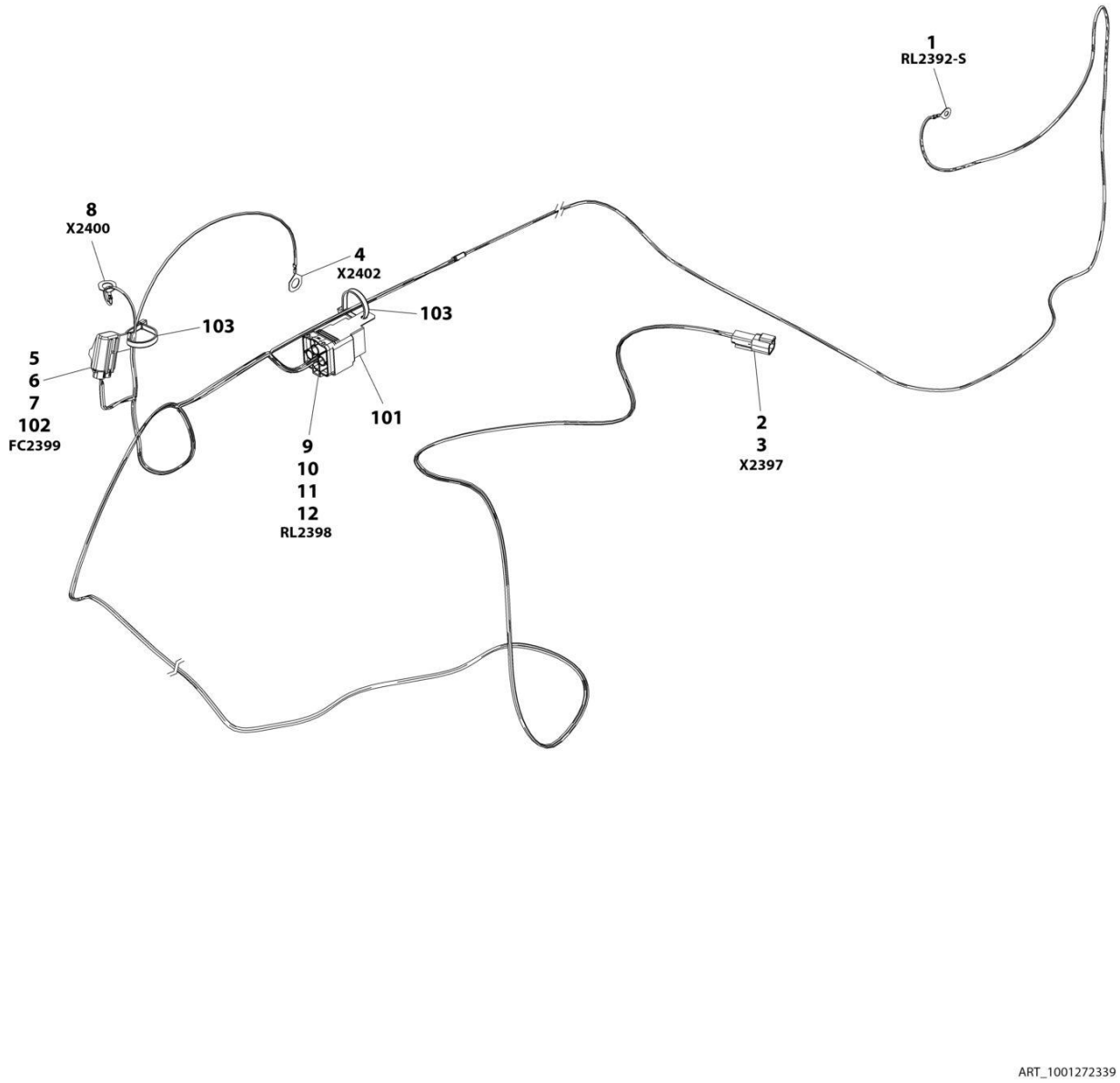

FIGURE 10-91. EMERGENCY LOWERING HARNESS

ITEM	PART NUMBER	QTY	DESCRIPTION	REV
	1001272339	Ref	EMERGENCY LOWERING HARNESS	A
1	1001187077	1	Terminal, Ring	
2	1001187077	1	Terminal, Ring	
3	1001187077	1	Terminal, Ring	
4	1001231398	1	Connector 5-Way	
5	1001231399	4	Terminal	
6	1001231404	4	Seal	
7	1001231406	1	Plug	
8	1001231397	1	Connector, 2-Way	
9	1001231399	2	Terminal	
10	1001231404	2	Seal	
11	4460897	1	Connector, 2-Position	
12	4460464	2	Terminal	
101	3740080	1	Relay	
102	8229234	1	Fuse	
103	1001008559	1	Tie-Strap	

FIGURE 10-92. TELEMATICS GATEWAY PLUS

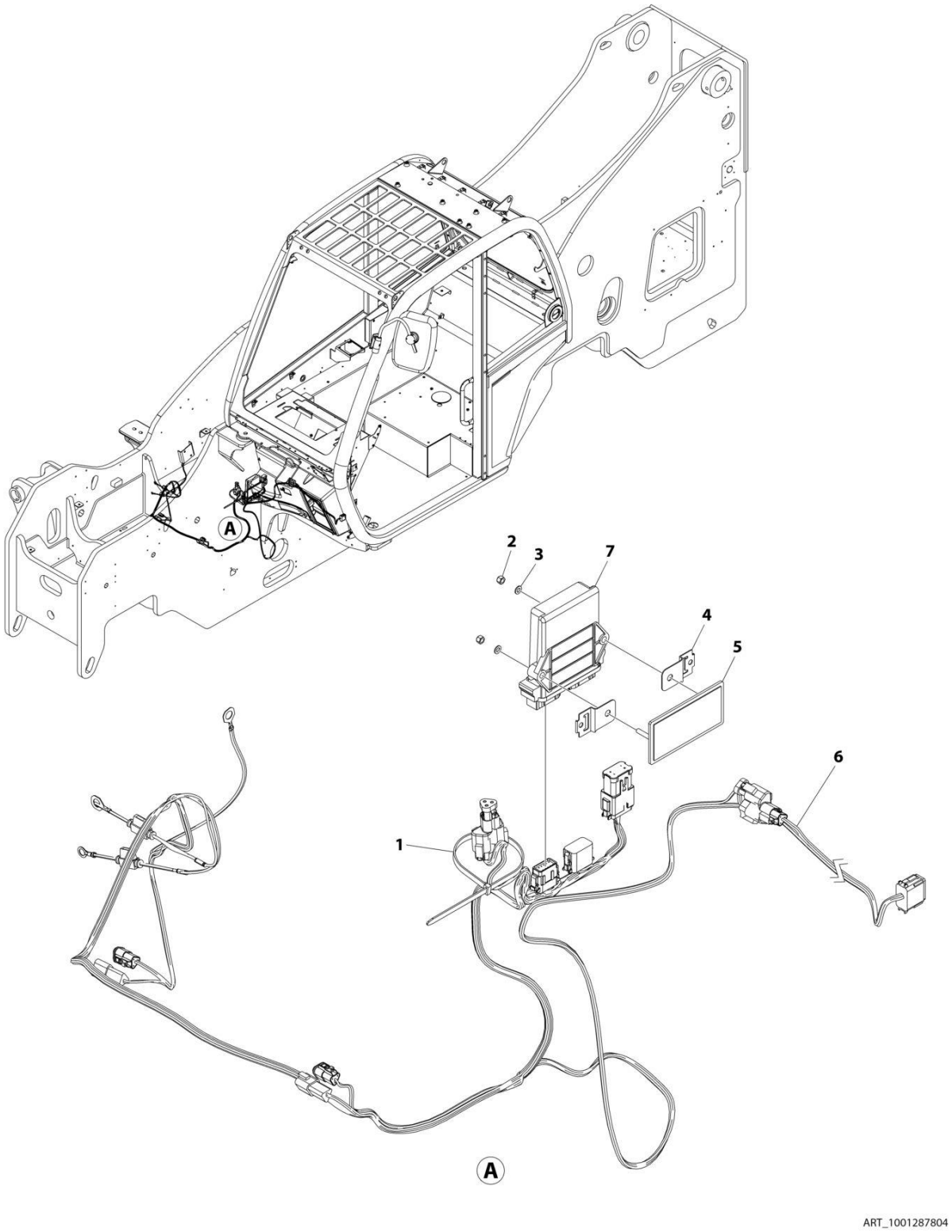

FIGURE 10-92. TELEMATICS GATEWAY PLUS

ITEM	PART NUMBER	QTY	DESCRIPTION	REV
	1001287804	Ref	TELEMATICS GATEWAY PLUS	A
1	1062255	1	Tie-Strap	
2	3290505	2	Nut M5	
3	4811600	2	Washer M5	
4	1001153749	2	Clip	
5	1001219082	1	Bracket	
6	1001275105	1	Harness, Telematics Gateway (See Separate Breakdown in this Section)	
7	1001282260	1	Control, Gateway Plus	

SECTION 11 - DECALS

FIGURE 11-1. DECAL INSTALLATION (2733)

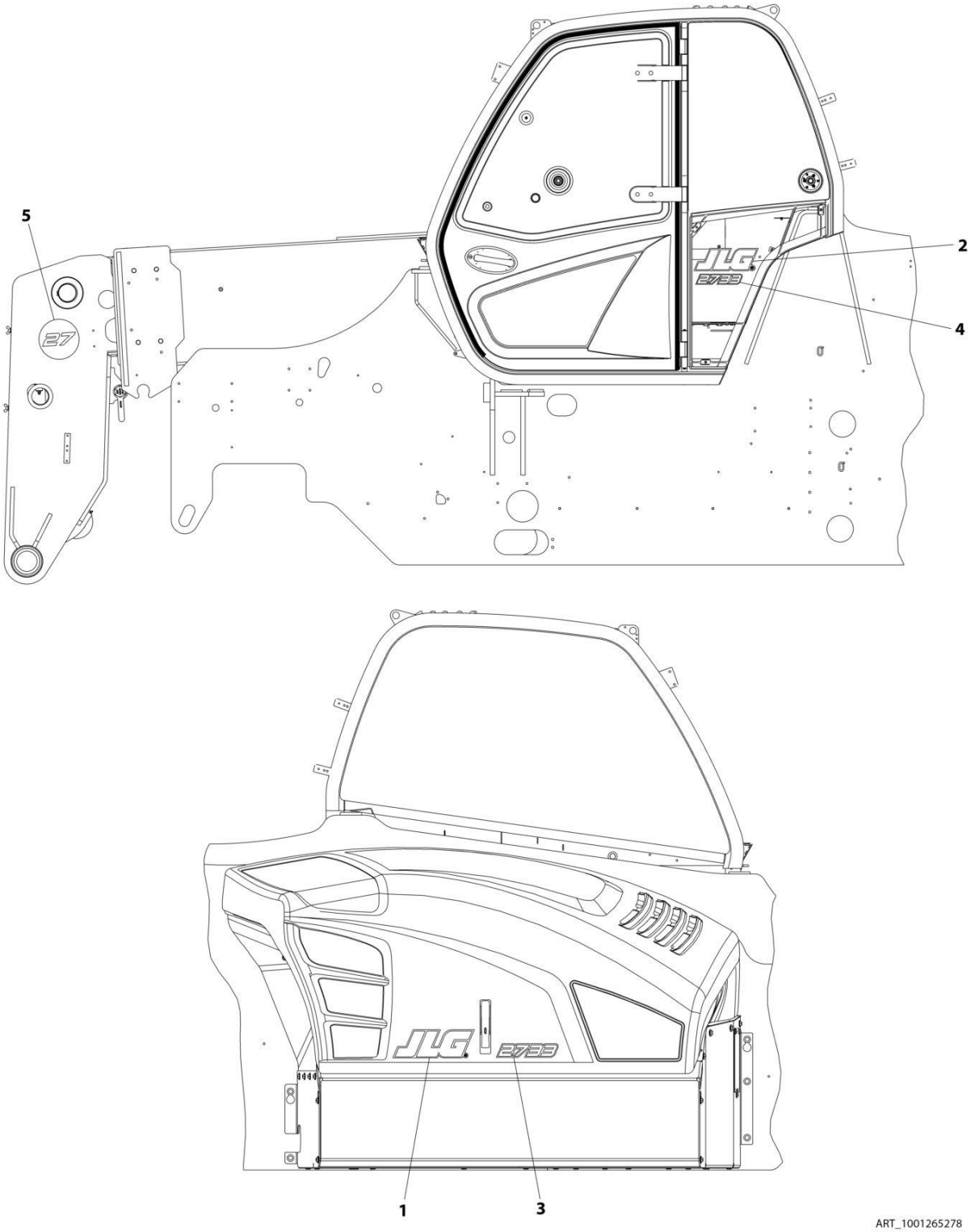

FIGURE 11-1. DECAL INSTALLATION (2733)

ITEM	PART NUMBER	QTY	DESCRIPTION	REV
	1001265278	Ref	DECAL INSTALLATION	B
1	1001160775	1	Decal, JLG	
2	1001169674	1	Decal, JLG	
3	1001280673	1	Decal, Hood	
4	1001280677	1	Decal, Cab	
5	1001280679	2	Decal, Boom Head	

FIGURE 11-2. DECAL INSTALLATION (12010)

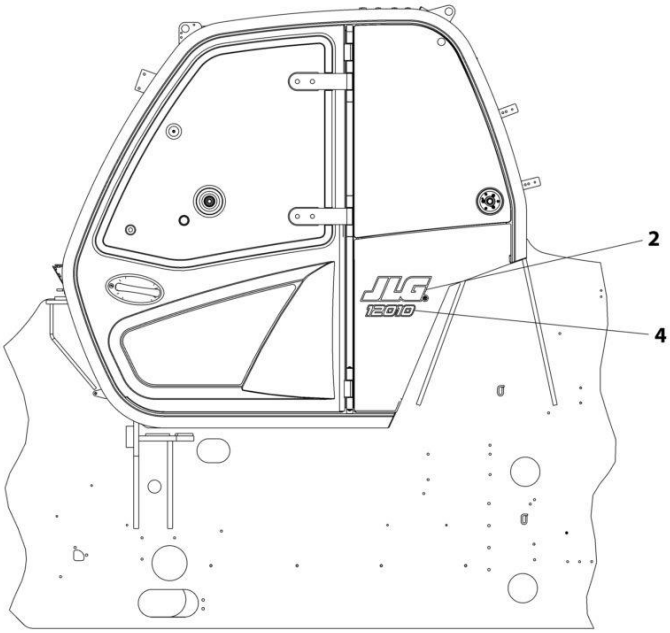

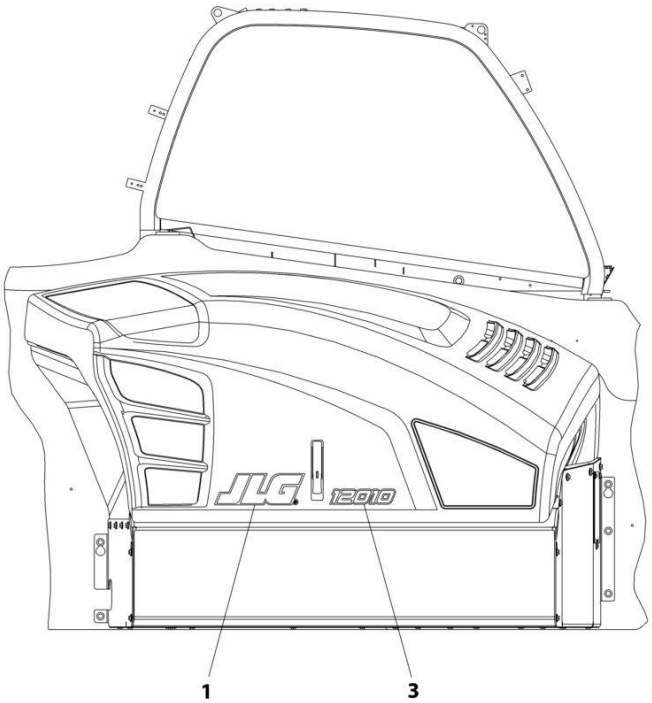

ART_1001269727

FIGURE 11-2. DECAL INSTALLATION (12010)

ITEM	PART NUMBER	QTY	DESCRIPTION	REV
	1001269727	Ref	DECAL INSTALLATION	B
1	1001160775	1	Decal, JLG	
2	1001169674	1	Decal, JLG	
3	1001280631	1	Decal, Hood	
4	1001280632	1	Decal, Cab	

FIGURE 11-3. DECAL INSTALLATION (ANSI)

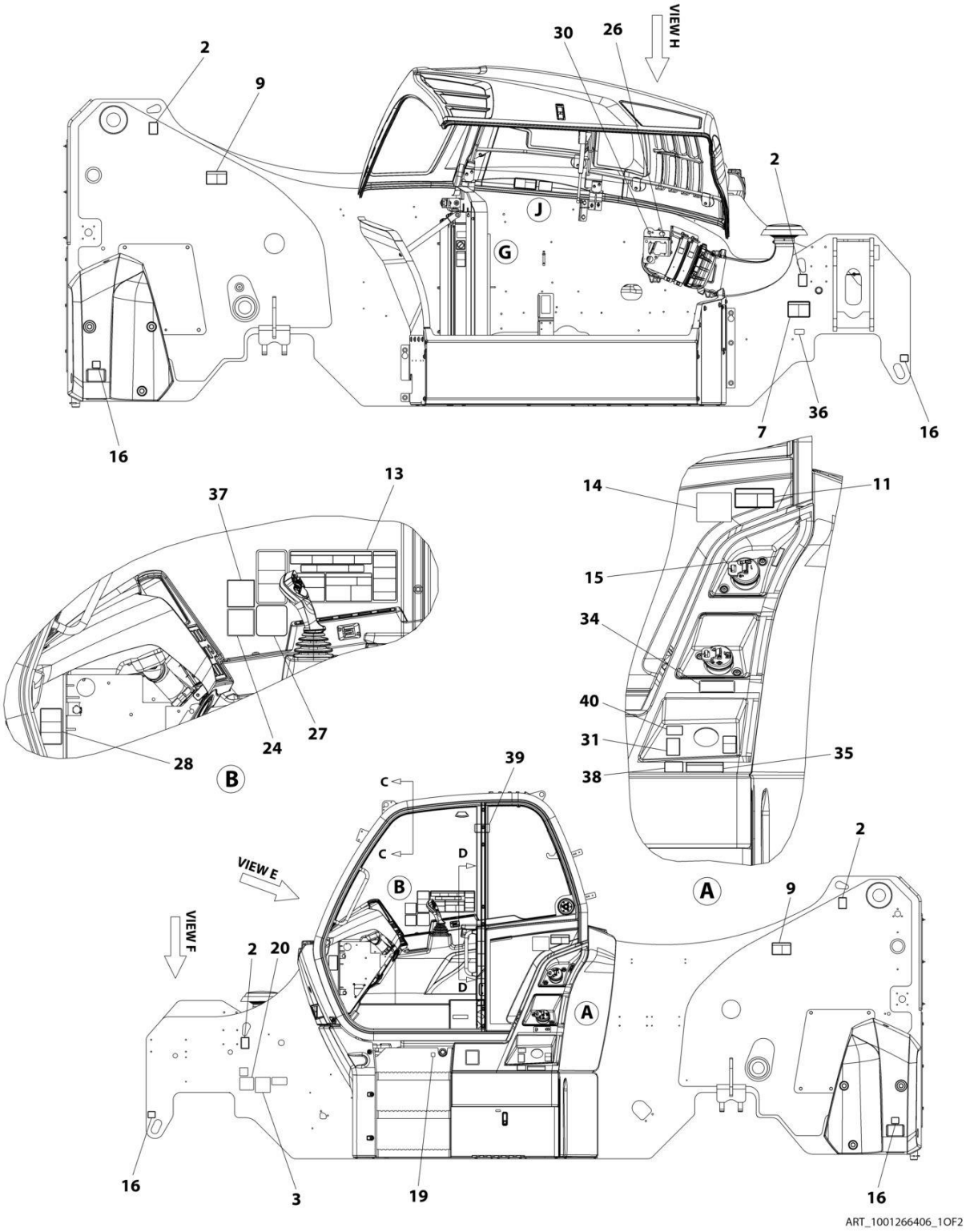

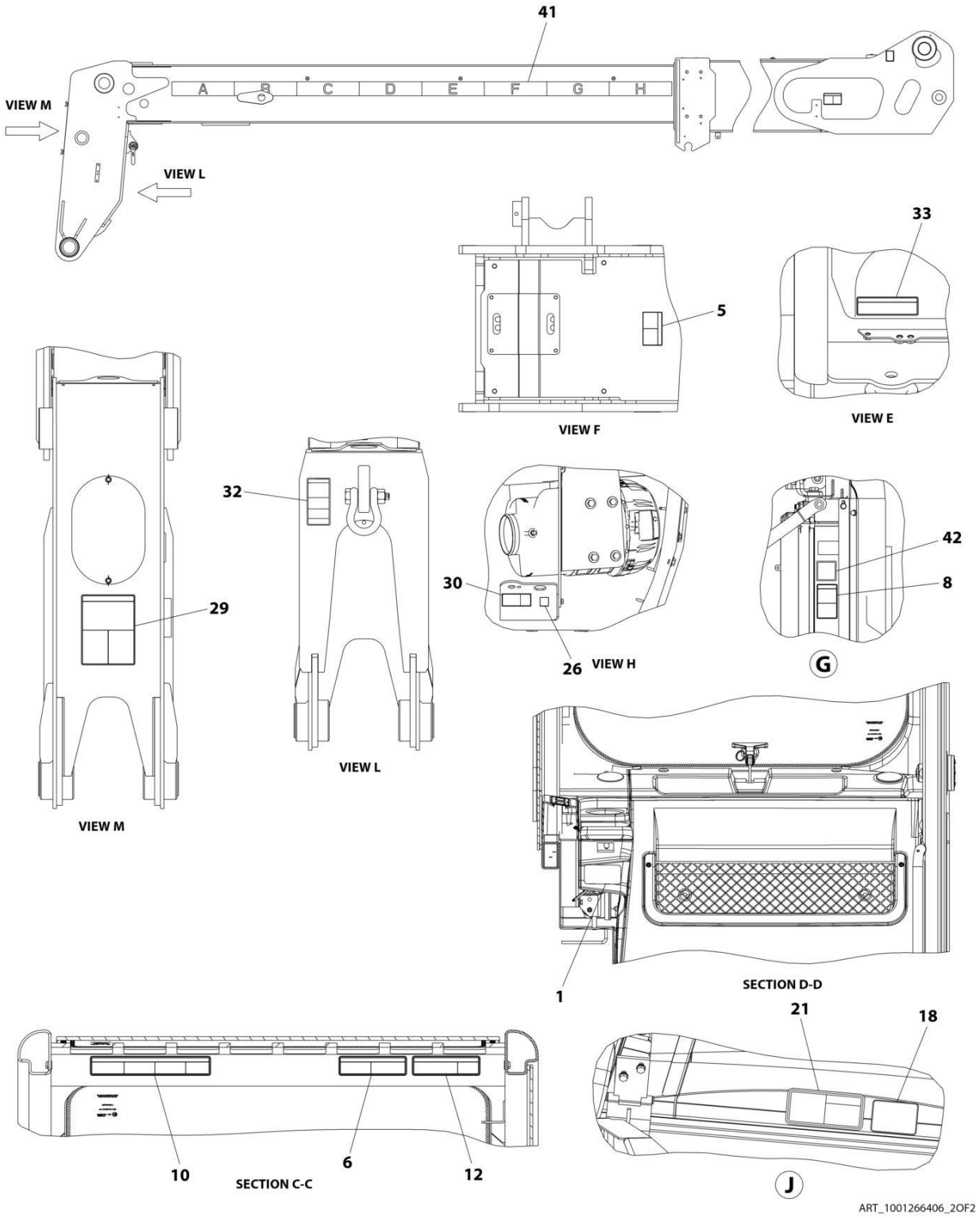
41
A
B
C
D
E
F
G
H
VIEW M
VIEW L
5
VIEW F
33
VIEW E
32
29
VIEW L
VIEW M
30
26
VIEW H
42
8
G
1
SECTION D-D
21
18
10
6
12
SECTION C-C
J
ART_1001266406_2OF2

FIGURE 11-3. DECAL INSTALLATION (ANSI)

ITEM	PART NUMBER	QTY	DESCRIPTION	REV
	1001266406	Ref	DECAL INSTALLATION (ANSI)	A
1	1670836	1	Decal, Boom	
2	1701500	4	Decal, Lift	
3	1702631	1	Decal, Bar Code	
5	1706296	1	Decal, Battery Warning	
6	1706299	1	Decal, Contacting Power Lines Warning	
7	1706300	1	Decal, Ether Warning	
8	1706301	1	Decal, Keep Clear Of Rotating Parts Warning	
9	1706302	2	Decal, Pinch Point Boom Holes	
10	1706306	1	Decal, Tip Over Warning	
11	1706768	1	Decal, Vehicle Roll Away	
12	1706850	1	Decal, Crush Hazard Warning	
13	1707078	1	Decal, Warning/Danger Cab	
14	3251813	1	Decal, USA	
15	4100181	1	Decal, Hydraulic Oil Fill	
16	4109801	4	Decal, Tie Down Point	
18	1001109053	1	Decal, Coolant Fill	
19	1001130323	1	Decal, Oil Level	
20	1001131271	1	Decal, Patent	
21	1001139578	1	Decal, Hot Fluid Warning	
24	1001172035	1	Decal, No Weld or Drill	
26	1001184632	1	Decal, Battery Positive	
27	1001188372	1	Decal, Sway	
28	1001191229	1	Decal, Fuse Panel	
29	1001195849	1	Decal, Carry Personnel	
30	1001195855	1	Decal, Battery Disconnect	
31	1001196806	1	Decal, Diesel Exhaust Fluid	
32	1001207217	1	Decal, Danger Swinging Loads	
33	1001218659	1	Decal, Brake Fluid	
34	1001218704	1	Decal, Ultra Low Sulfur Diesel	
35	1001219212	1	Decal, DEF Fluid	
36	1001223453	1	Decal, ICES	
37	1001227287	1	Decal, Manual Location	
38	1001230310	1	Decal, JLG DEF Tank Service	
39	1001231801	1	Decal, Warning Prop 65 Diesel	
40	1001247646	1	Decal, DEF Min Refill Volume	
41	1001266179	1	Decal, Boom Extend	
42	AU2105	1	Decal, No Karcher	

FIGURE 11-4. DECAL INSTALLATION (ISO)

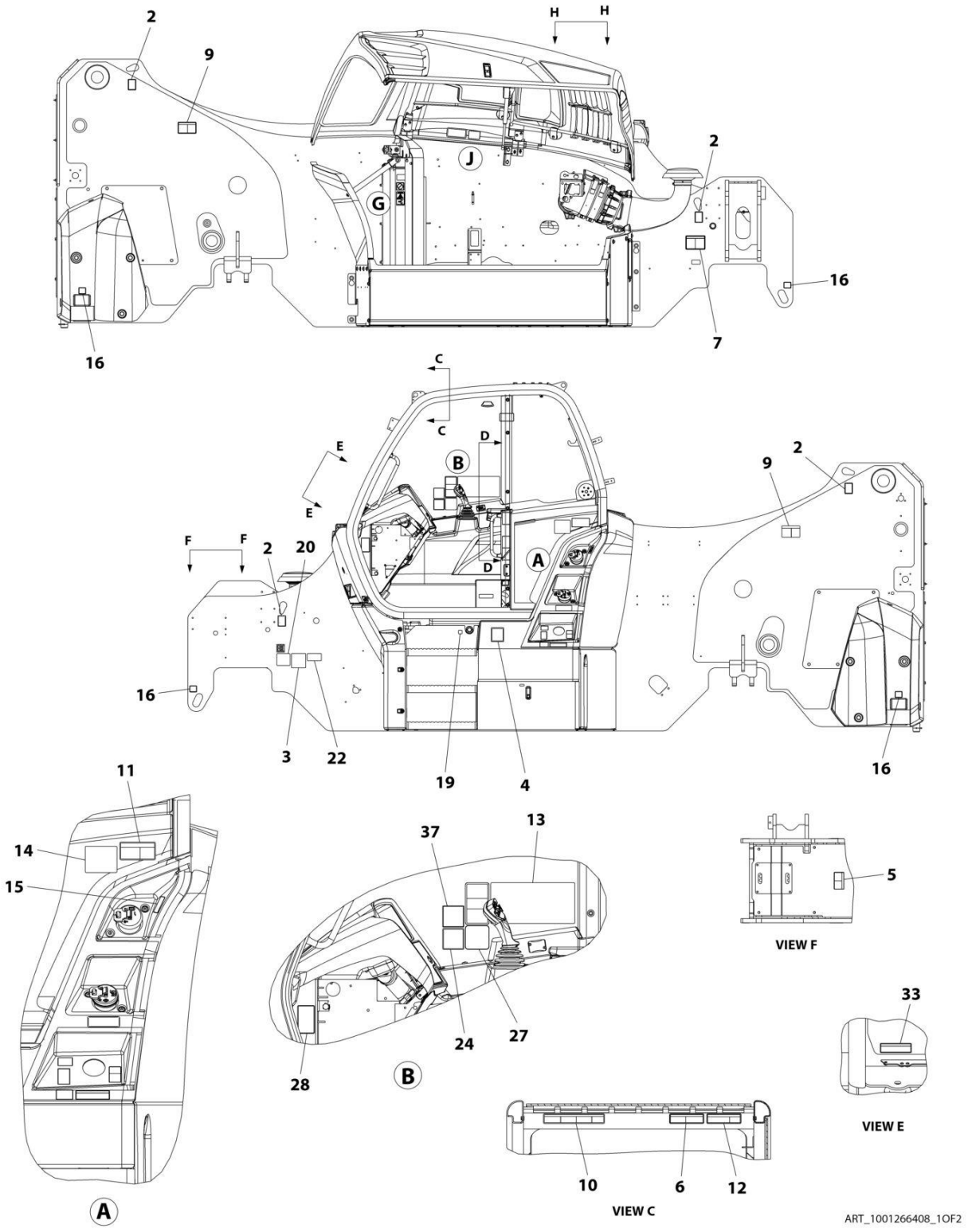

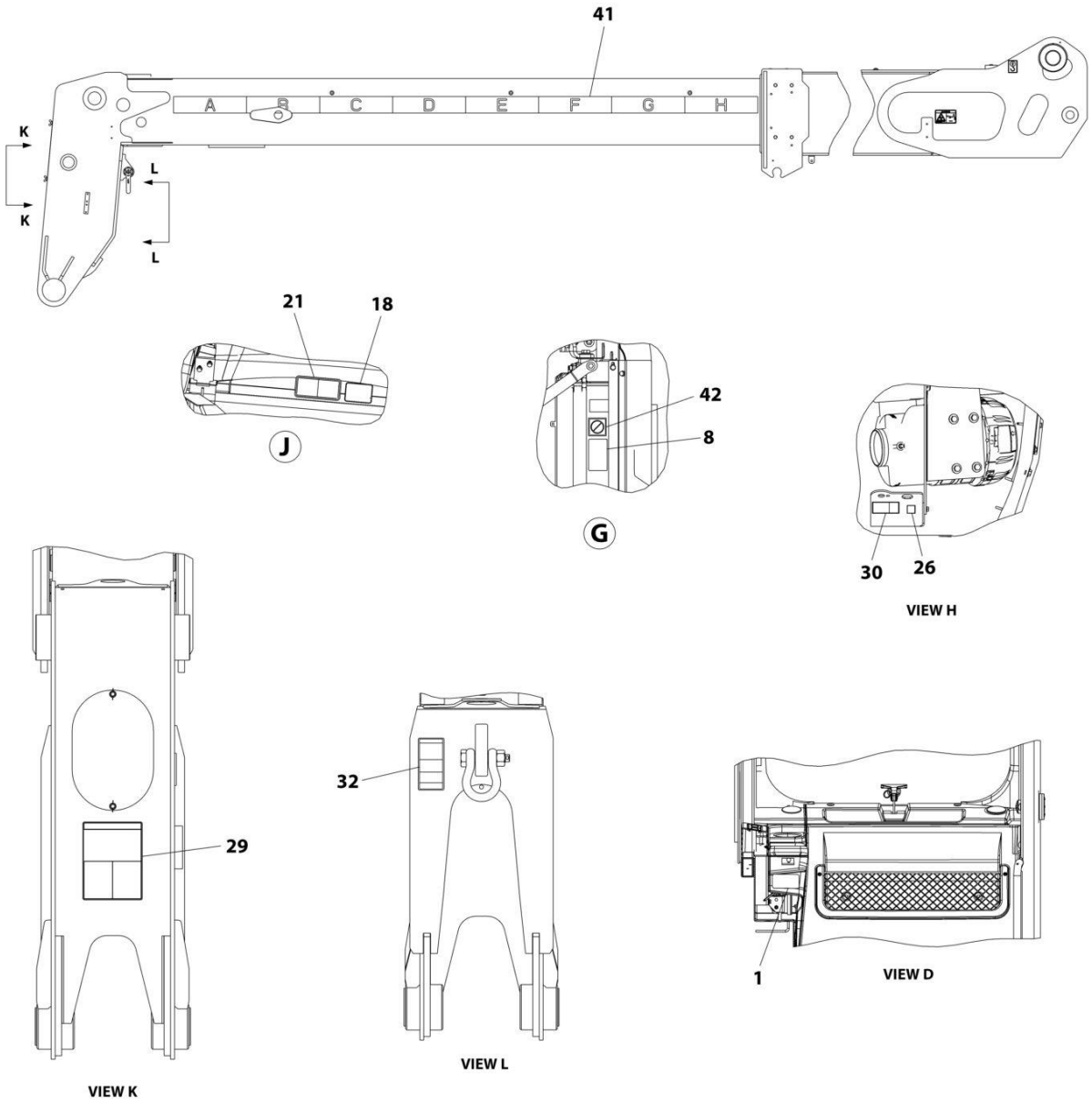

ART_1001266408_2OF2

FIGURE 11-4. DECAL INSTALLATION (ISO)

ITEM	PART NUMBER	QTY	DESCRIPTION	REV
	1001266408	Ref	DECAL INSTALLATION (ISO)	A
1	1670836	1	Decal, Boom	
2	1701500	4	Decal, Lift	
3	1702631	1	Decal, Bar Code	
4	1705980	1	Decal, Acoustic Power	
5	1706281	1	Decal, Battery Warning	
6	1706284	1	Decal, Contacting Power Lines Warning	
7	1706098	1	Decal, Warning Prop 65 Diesel	
8	1706285	1	Decal, Keep Clear Of Rotating Parts Warning	
9	1706292	2	Decal, Pinch Point Boom Holes	
10	1706288	1	Decal, Tip Over Warning	
11	1001092878	1	Decal, Vehicle Roll Away	
12	1001092877	1	Decal, Crush Hazard Warning	
13	1001101895	1	Decal, Warning Cab	
14	3251813	1	Decal, USA	
15	4100181	1	Decal, Hydraulic Oil Fill	
16	4109801	4	Decal, Tie Down Point	
18	1001109053	1	Decal, Coolant Fill	
19	1001130323	1	Decal, Oil Level	
20	1001131271	1	Decal, Patent	
21	1001139942	1	Decal, Hot Fluid Warning	
22	1001143852	1	Decal, LRC EPA	
24	1001172035	1	Decal, No Weld or Drill	
26	1001184632	1	Decal, Battery Positive	
27	1001188372	1	Decal, Sway	
28	1001191229	1	Decal, Fuse Panel	
29	1706282	1	Decal, Carry Personnel	
30	1001195855	1	Decal, Battery Disconnect	
32	1001207218	1	Decal, Danger Swinging Loads	
33	1001219211	1	Decal, Brake Fluid	
37	1001227287	1	Decal, Manual Location	
41	1001266179	1	Decal, Boom Extend	
42	AU2105	1	Decal, No Karcher	

FIGURE 11-5. DECAL INSTALLATION (CSA ENGLISH/FRENCH)

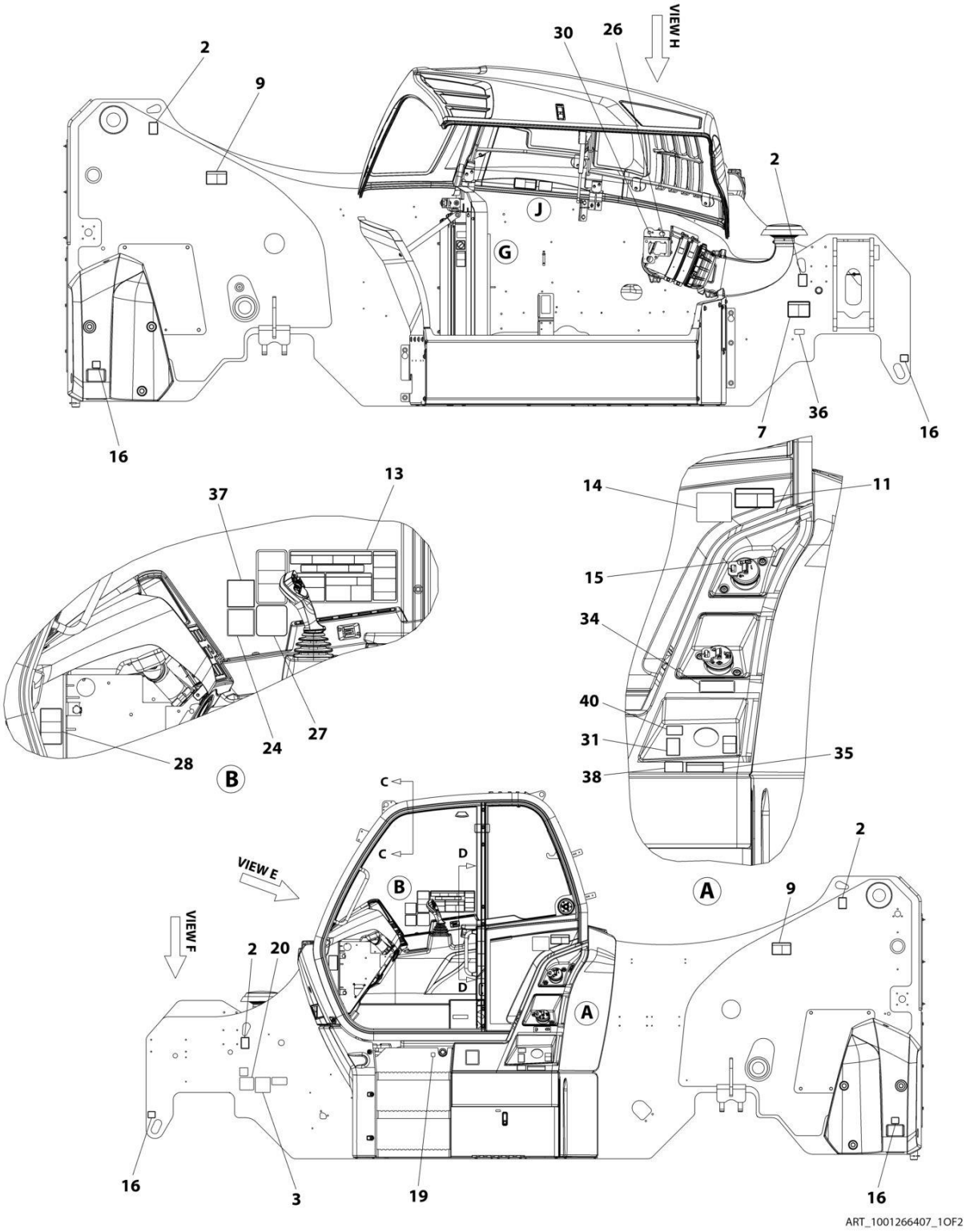

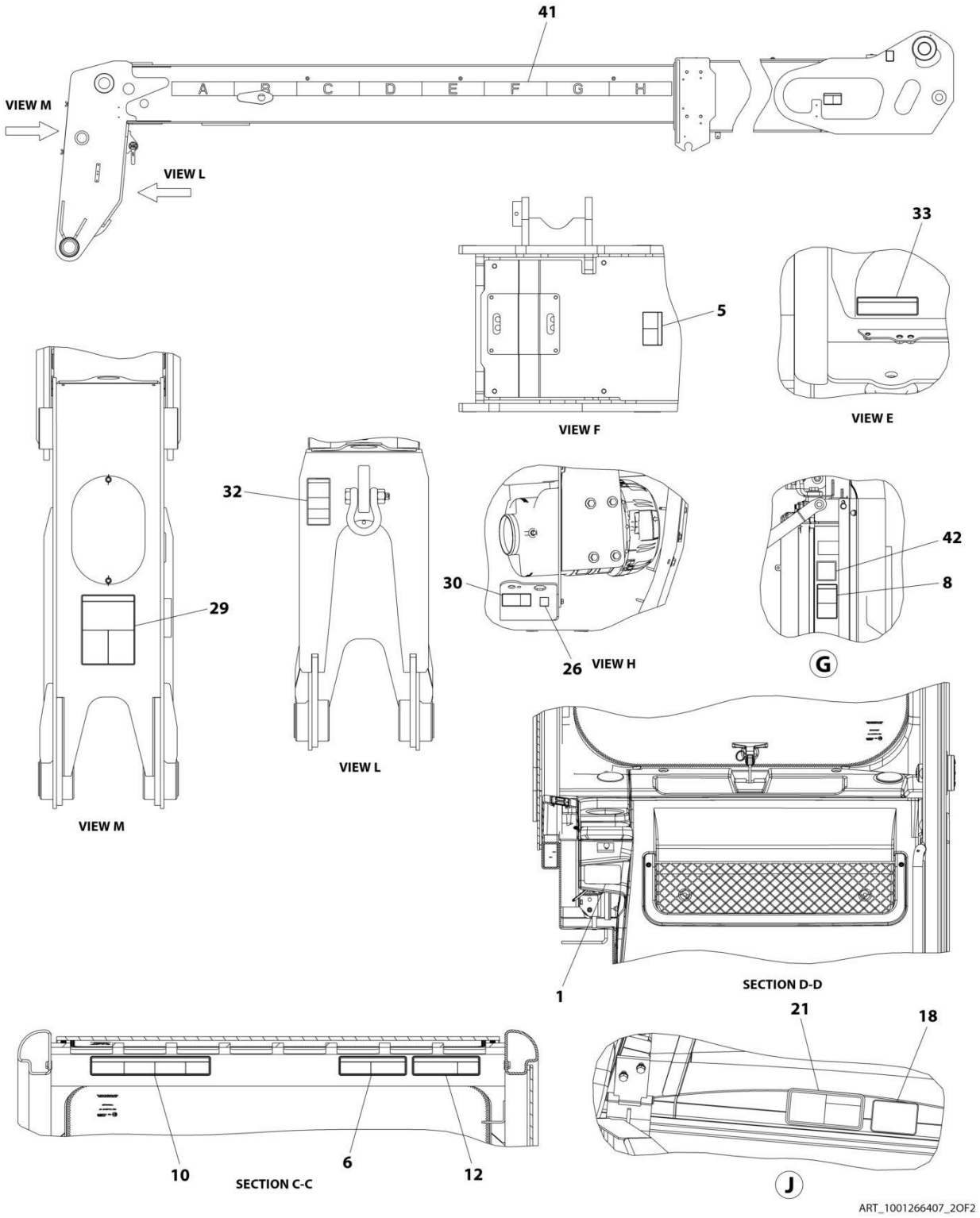
41
A
B
C
D
E
F
G
H
VIEW M
VIEW L
5
VIEW F
33
VIEW E
32
29
VIEW L
VIEW M
30
26
VIEW H
42
8
G
1
SECTION D-D
21
18
10
6
12
SECTION C-C
J
ART_1001266407_2OF2

FIGURE 11-5. DECAL INSTALLATION (CSA ENGLISH/FRENCH)

ITEM	PART NUMBER	QTY	DESCRIPTION	REV
	1001266407	Ref	DECAL INSTALLATION (CSA)	A
1	1670836	1	Decal, Boom	
2	1701500	4	Decal, Lift	
3	1702631	1	Decal, Bar Code	
5	1001163174	1	Decal, Battery Warning	
6	1001163210	1	Decal, Contacting Power Lines Warning	
7	1001163212	1	Decal, No Ether Warning	
8	1001163222	1	Decal, Moving Parts	
9	1001163223	2	Decal, Pinch Point	
10	1001163285	1	Decal, Tip Over Warning	
11	1001163300	1	Decal, No Riders	
12	1001163304	1	Decal, Crush Hazard Warning	
13	1001233558	1	Decal, Warning/Danger Cab	
14	3251813	1	Decal, USA	
15	4100181	1	Decal, Hydraulic Oil Fill	
16	4109801	4	Decal, Tie Down Point	
18	1001109053	1	Decal, Coolant Fill	
19	1001130323	1	Decal, Oil Level	
20	1001131271	1	Decal, Patent	
21	1001163323	1	Decal, Hot Fluid Warning	
24	1001172035	1	Decal, No Weld or Drill	
26	1001184632	1	Decal, Battery Positive	
27	1001188372	1	Decal, Sway	
28	1001191229	1	Decal, Fuse Panel	
29	1001195851	1	Decal, Carry Personnel	
30	1001195855	1	Decal, Battery Disconnect	
31	1001196806	1	Decal, Diesel Exhaust Fluid	
32	1001209625	1	Decal, Danger Swinging Loads	
33	1001219211	1	Decal, Brake Fluid	
34	1001163355	1	Decal, Ultra Low Sulfur Diesel	
35	1001219212	1	Decal, DEF Fluid	
36	1001223453	1	Decal, ICES	
37	1001227287	1	Decal, Manual Location	
38	1001230311	1	Decal, JLG DEF Tank Service	
40	1001247646	1	Decal, DEF Min Refill Volume	
41	1001266179	1	Decal, Boom Extend	
42	AU2105	1	Decal, No Karcher	

FIGURE 11-6. DECAL INSTALLATION (AUS - 2733)

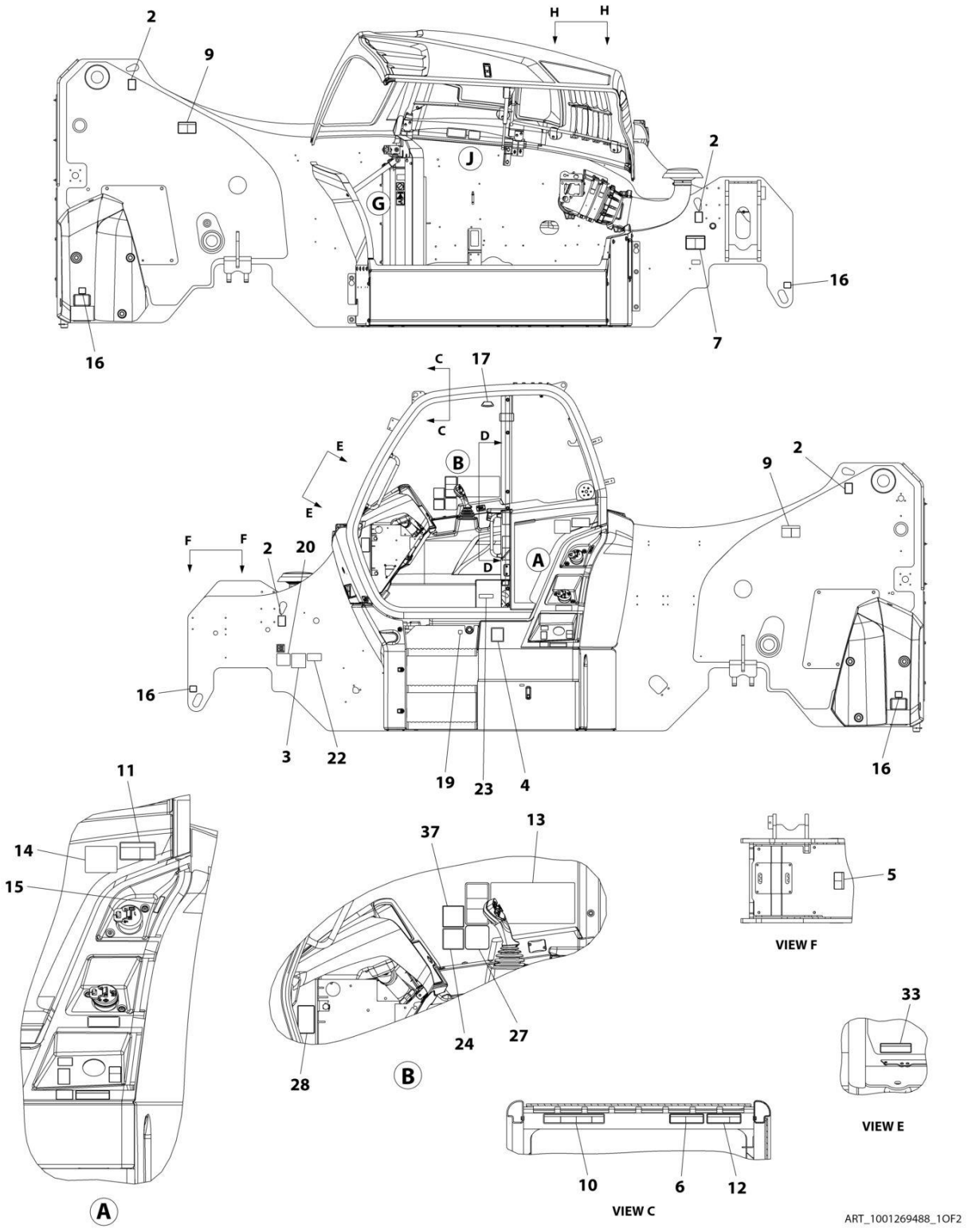

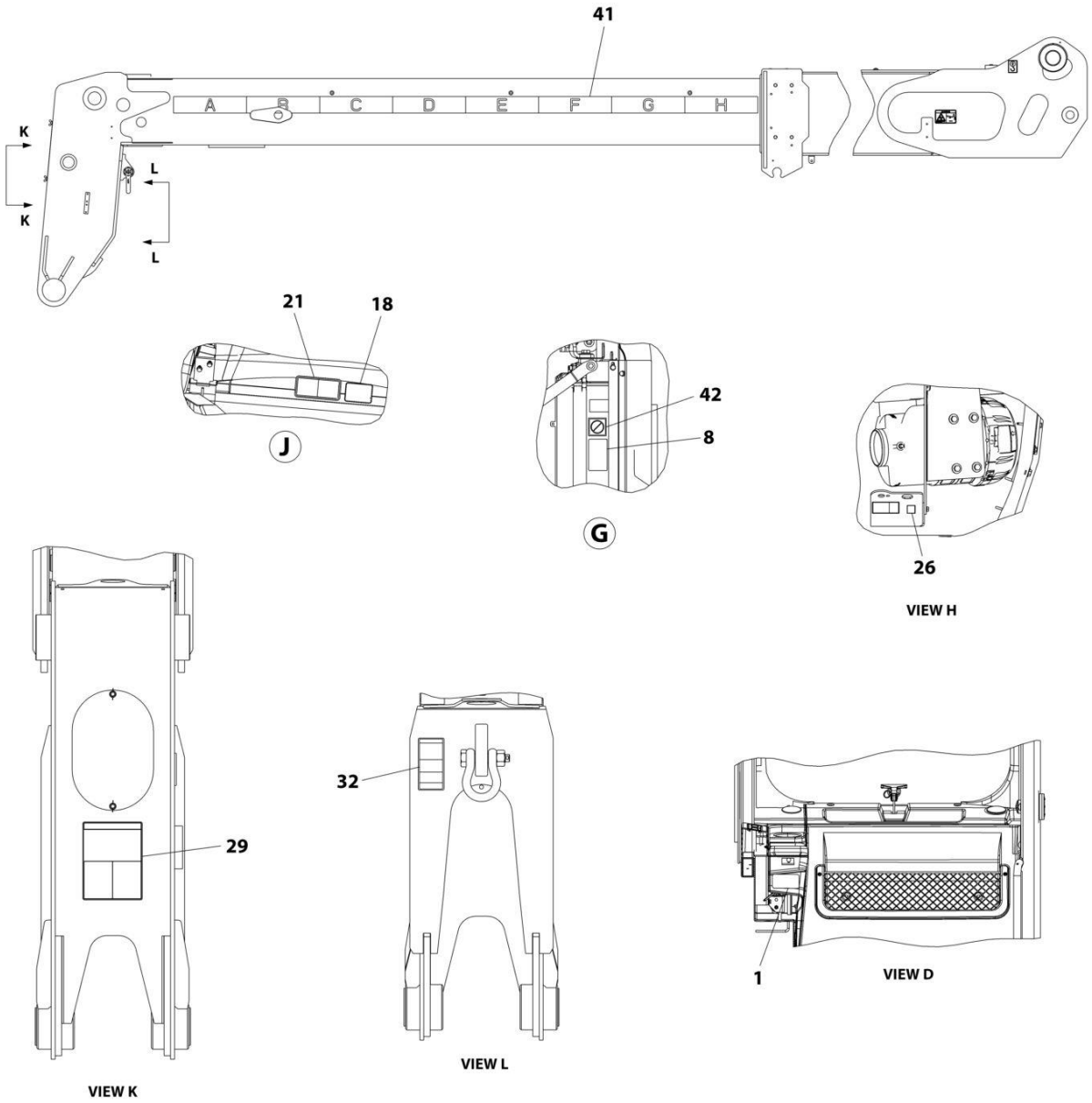

ART_1001269488_2OF2

FIGURE 11-6. DECAL INSTALLATION (AUS - 2733)

ITEM	PART NUMBER	QTY	DESCRIPTION	REV
	1001269488	Ref	DECAL INSTALLATION	A
1	1670836	1	Decal, Boom	
2	1701500	4	Decal, Lift	
3	1702631	1	Decal, Bar Code	
4	1705980	1	Decal, Acoustic Power	
5	1706281	1	Decal, Battery Warning	
6	1706284	1	Decal, Contacting Power Lines Warning	
7	1706098	1	Decal, Warning Ether Start	
8	1706285	1	Decal, Moving Parts	
9	1706292	2	Decal, Pinch Point	
10	1706288	1	Decal, Tip Over Warning	
11	1001092878	1	Decal, No Riders	
12	1001092877	1	Decal, Crush Hazard	
13	1001101895	1	Decal, Warning Cab	
14	3251813	1	Decal, USA	
15	4100181	1	Decal, Hydraulic Oil Fill	
16	4109801	4	Decal, Tie Down Point	
17	8466306	1	Decal, Gauge Tilt	
18	1001109053	1	Decal, Coolant Fill	
19	1001130323	1	Decal, Oil Level	
20	1001131271	1	Decal, Patent	
21	1001139942	1	Decal, Hot Fluid Warning	
22	1001143852	1	Decal, LRC EPA	
23	1001155230	1	Decal, CAB Safety	
24	1001172035	1	Decal, No Weld or Drill	
26	1001184632	1	Decal, Battery Positive	
27	1001188372	1	Decal, Sway	
28	1001191229	1	Decal, Fuse Panel	
29	1706282	1	Decal, Carry Personnel	
32	1001207218	1	Decal, Danger Swinging Load	
33	1001219211	1	Decal, Brake Fluid	
37	1001227287	1	Decal, Manual Location	
41	1001266179	1	Decal, Boom Extend	
42	AU2105	1	Decal, No Karcher	

FIGURE 11-7. DECAL INSTALLATION (AUS - 2733)

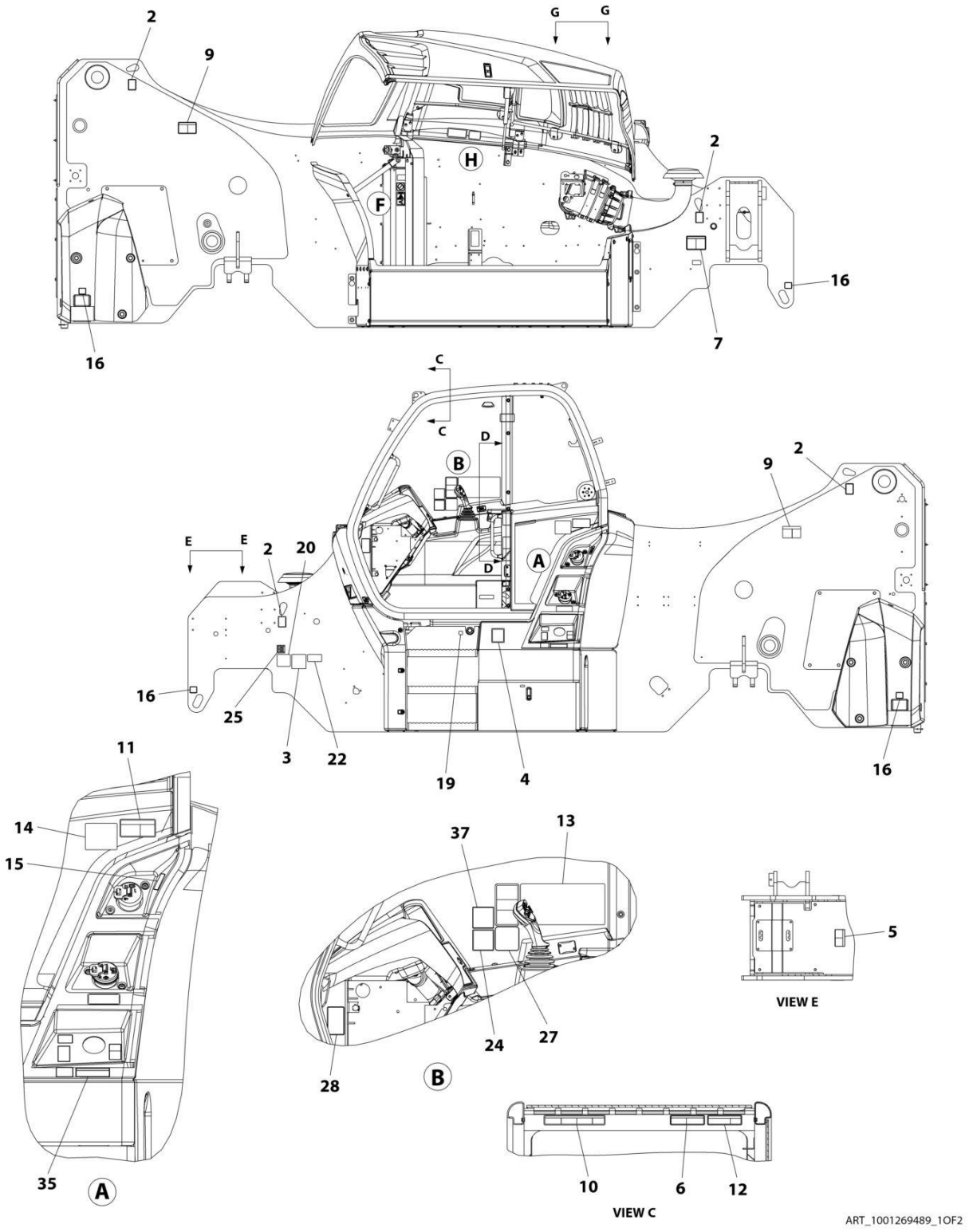

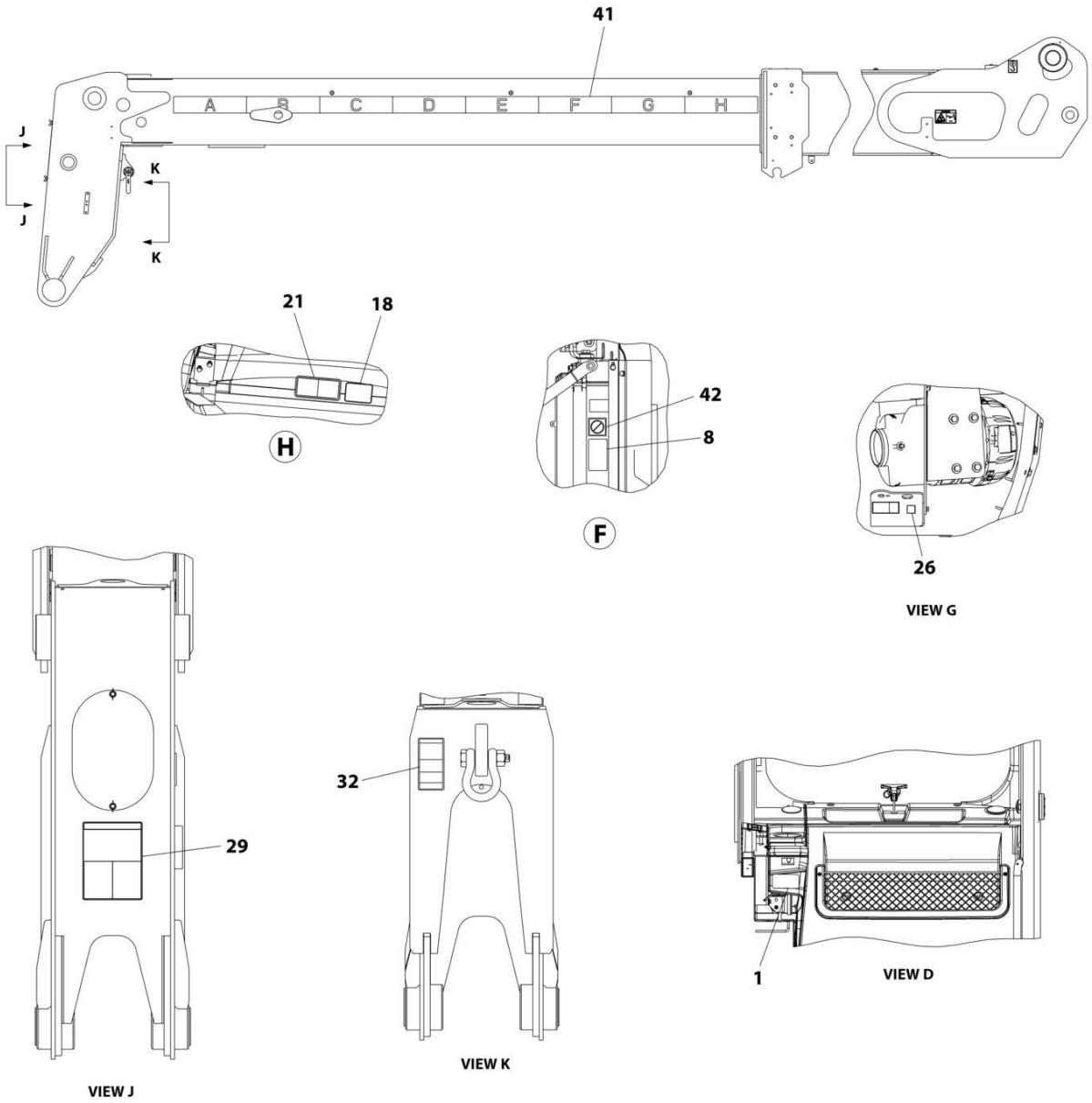

ART_1001269489_2OF2

FIGURE 11-7. DECAL INSTALLATION (AUS - 2733)

ITEM	PART NUMBER	QTY	DESCRIPTION	REV
	1001269489	Ref	DECAL INSTALLATION	A
1	1670836	1	Decal, Boom	
2	1701500	4	Decal, Lift	
3	1702631	1	Decal, Bar Code	
4	1705980	1	Decal, Acoustic Power	
5	1706281	1	Decal, Battery Warning	
6	1706284	1	Decal, Contacting Power Lines Warning	
7	1706098	1	Decal, Warning Ether Start	
8	1706285	1	Decal, Moving Parts	
9	1706292	2	Decal, Pinch Point	
10	1706288	1	Decal, Tip Over Warning	
11	1001092878	1	Decal, No Riders	
12	1001092877	1	Decal, Crush Hazard	
13	1001101895	1	Decal, Warning Cab	
14	3251813	1	Decal, USA	
15	4100181	1	Decal, Hydraulic Oil Fill	
16	4109801	4	Decal, Tie Down Point	
18	1001109053	1	Decal, Coolant Fill	
19	1001130323	1	Decal, Oil Level	
20	1001131271	1	Decal, Patent	
21	1001139942	1	Decal, Hot Fluid Warning	
22	1001143852	1	Decal, LRC EPA	
24	1001172035	1	Decal, No Weld or Drill	
25	1001173703	1	Decal, EAC	
26	1001184632	1	Decal, Battery Positive	
27	1001188372	1	Decal, Sway	
28	1001191229	1	Decal, Fuse Panel	
29	1706282	1	Decal, Carry Personnel	
32	1001207218	1	Decal, Danger Swinging Load	
33	1001219211	1	Decal, Brake Fluid	
37	1001227287	1	Decal, Manual Location	
41	1001266179	1	Decal, Boom Extend	
42	AU2105	1	Decal, No Karcher	

FIGURE 11-8. BOOM DECAL INSTALLATION

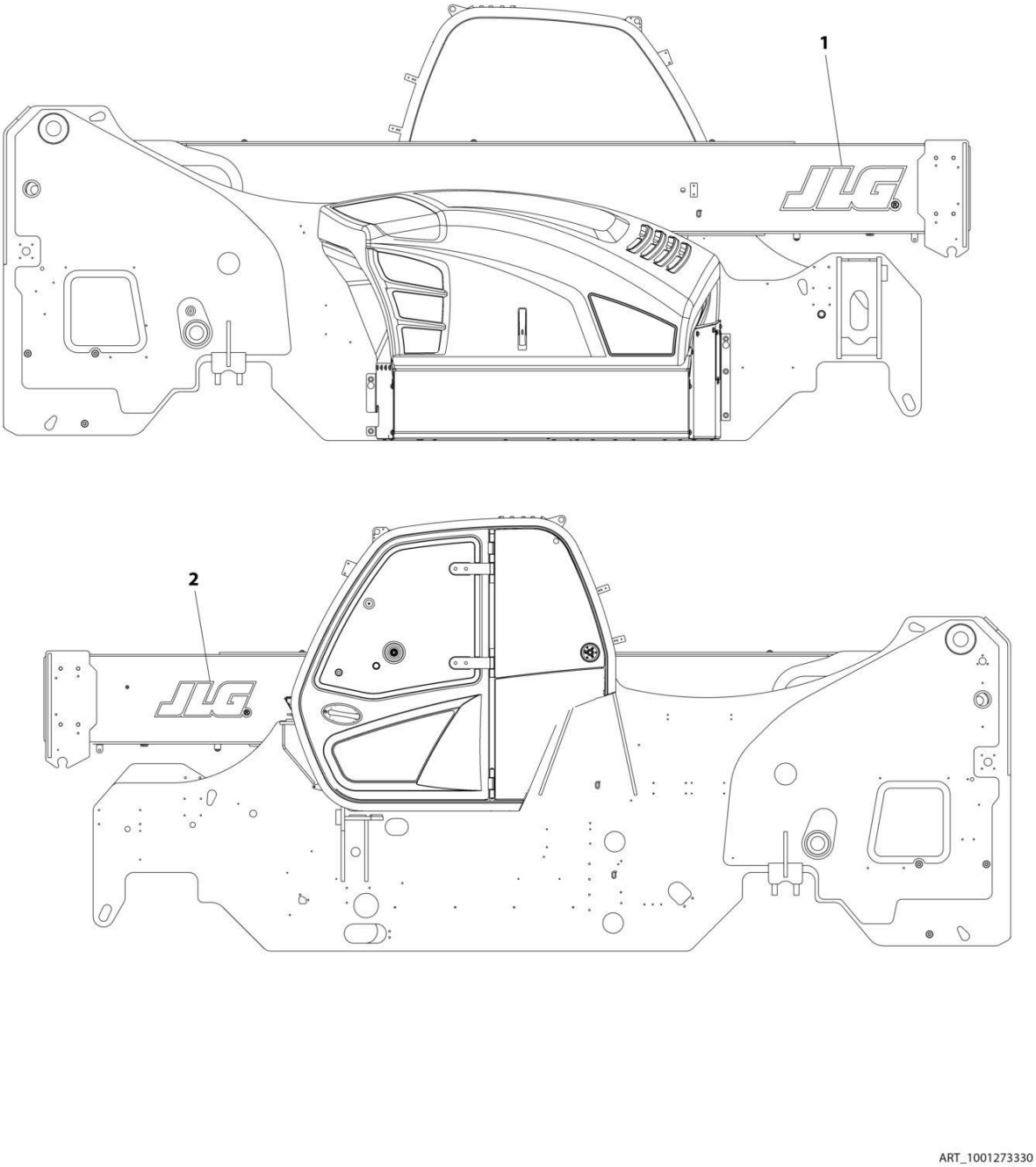

FIGURE 11-8. BOOM DECAL INSTALLATION

ITEM	PART NUMBER	QTY	DESCRIPTION	REV
	1001273330	Ref	BOOM DECAL INSTALLATION	B
1	1001159728	1	Decal, JLG	
2	1001277990	1	Decal, JLG	

FIGURE 11-9. LOADCHARTS (ANSI) - 2733

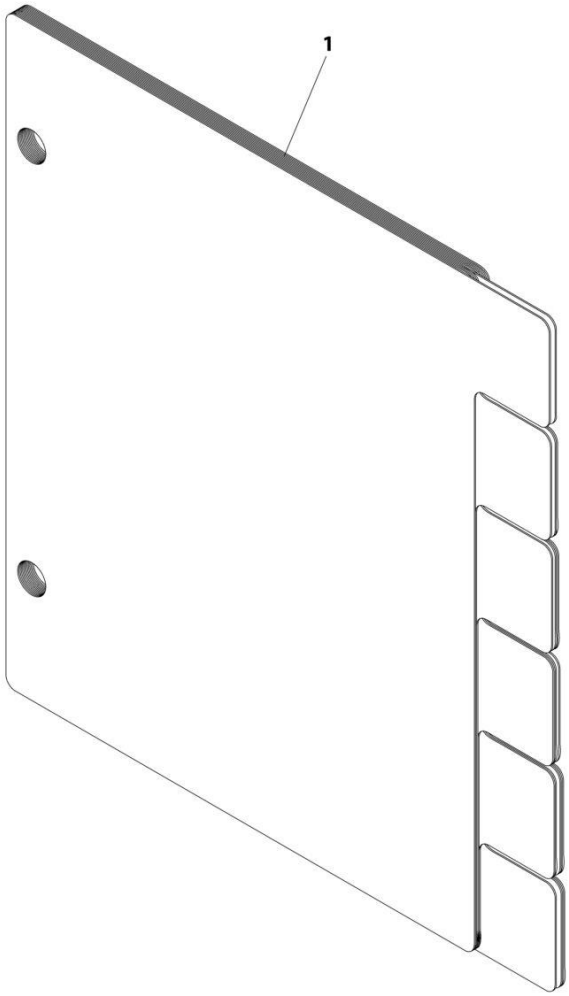

ART_1001268709

FIGURE 11-9. LOADCHARTS (ANSI) - 2733

ITEM	PART NUMBER	QTY	DESCRIPTION	REV
1	1001268709	1	LOADCHARTS (ANSI)	A

FIGURE 11-10. LOADCHARTS (ISO) - 12010

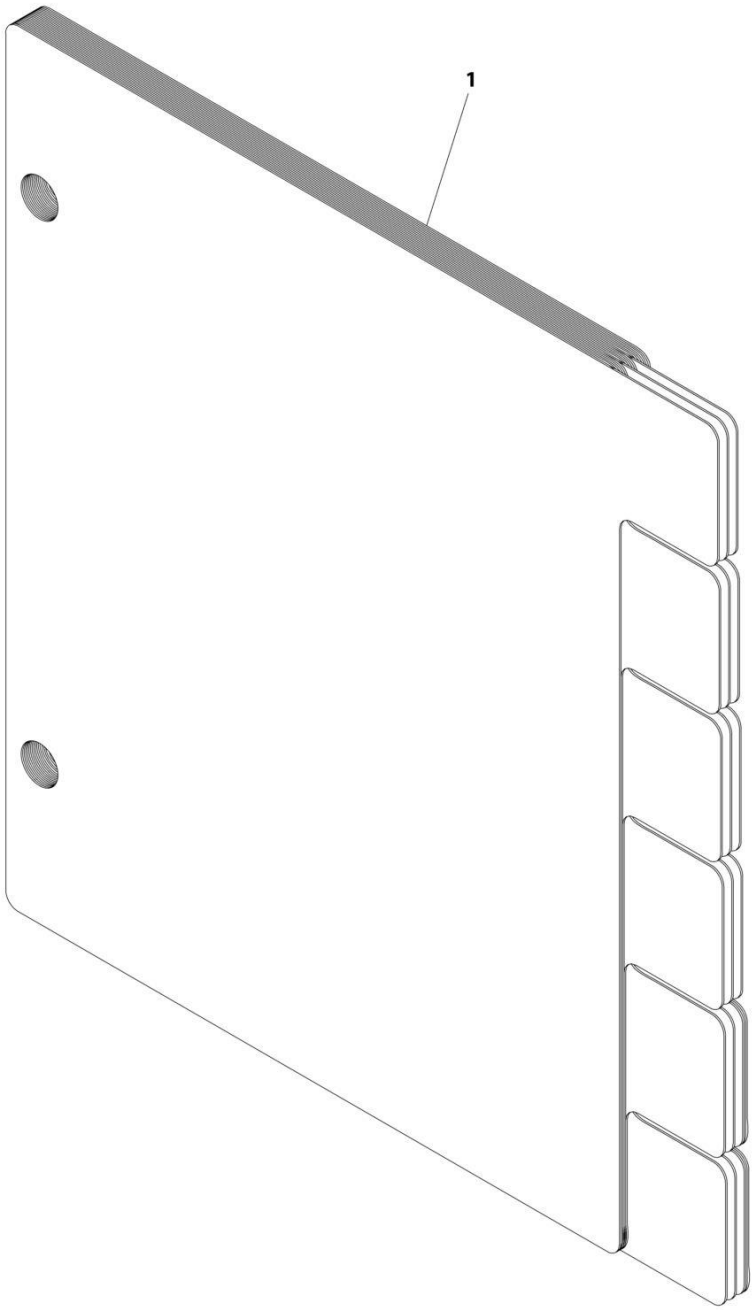

ART_1001282732

FIGURE 11-10. LOADCHARTS (ISO) - 12010

ITEM	PART NUMBER	QTY	DESCRIPTION	REV
1	1001282732	1	LOADCHARTS (ISO)	A

FIGURE 11-11. LOAD CHART REMOTE INSTALLATION (ANSI)

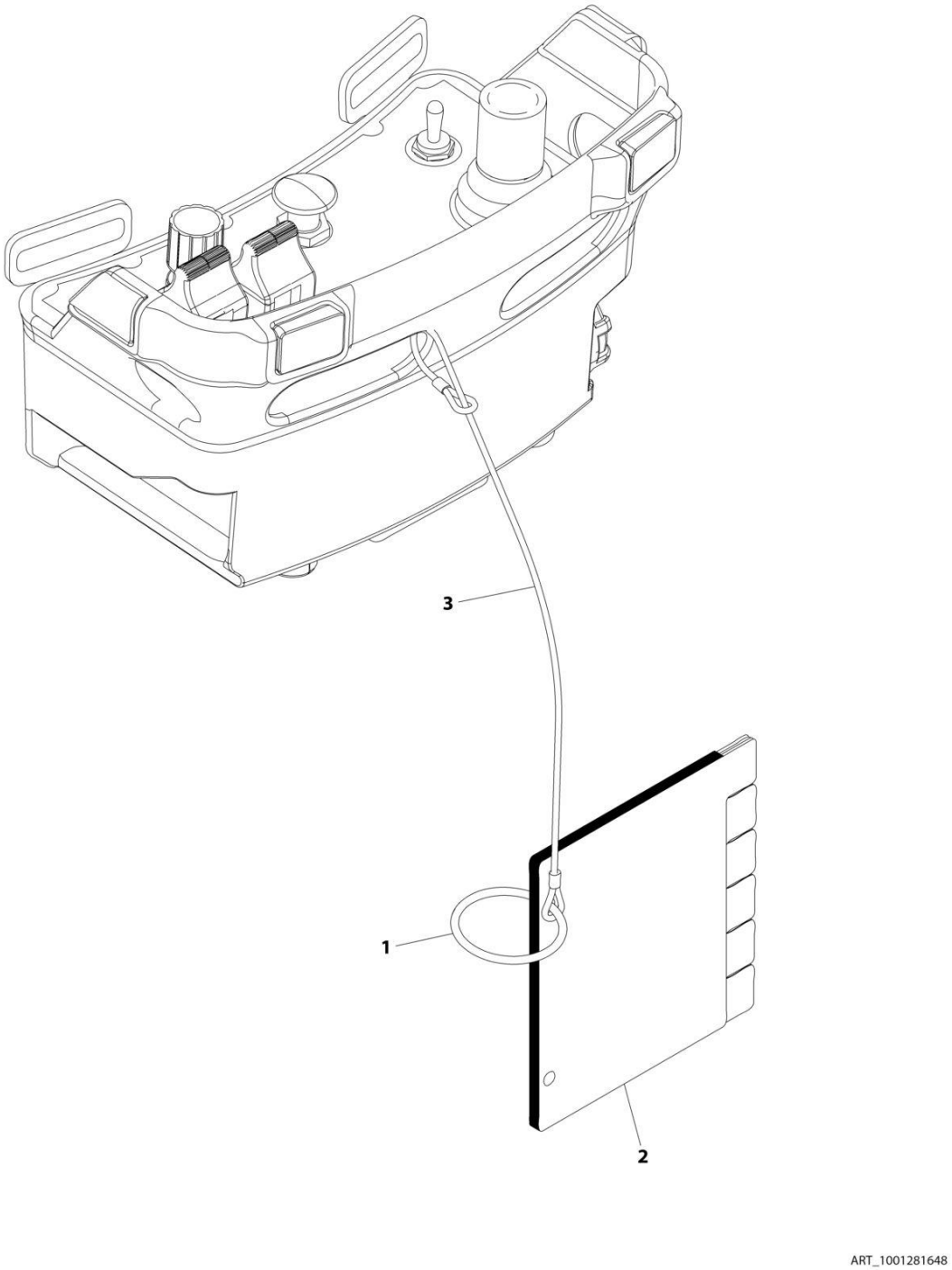

FIGURE 11-11. LOAD CHART REMOTE INSTALLATION (ANSI)

ITEM	PART NUMBER	QTY	DESCRIPTION	REV
	1001281648	Ref	LOAD CHART REMOTE INSTALLATION (ANSI)	A
1	1001271061	1	Clip	
2	1001281647	1	Booklet Remote	
3	1060799	1	Cable	

FIGURE 11-12. LOAD CHART REMOTE INSTALLATION (ISO)

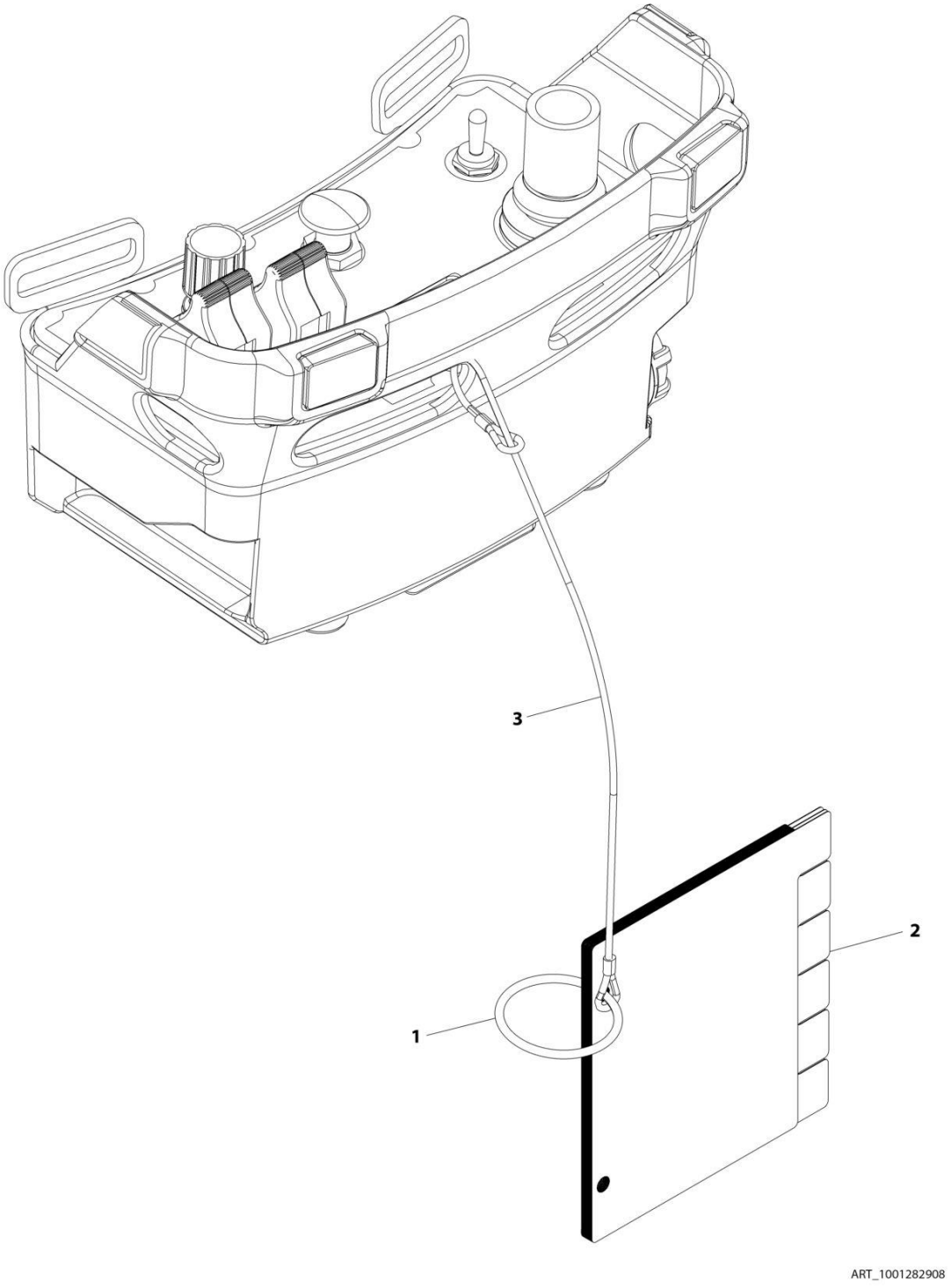

FIGURE 11-12. LOAD CHART REMOTE INSTALLATION (ISO)

ITEM	PART NUMBER	QTY	DESCRIPTION	REV
	1001282908	Ref	LOAD CHART REMOTE INSTALLATION (ISO)	A
1	1001271061	1	Clip	
2	1001282907	1	Load, Booklet Remote (See Separate Breakdown in this Section)	
3	1060799	1	Cable, Lanyard	

FIGURE 11-13. LOAD CHART REMOTE INSTALLATION (ISO)

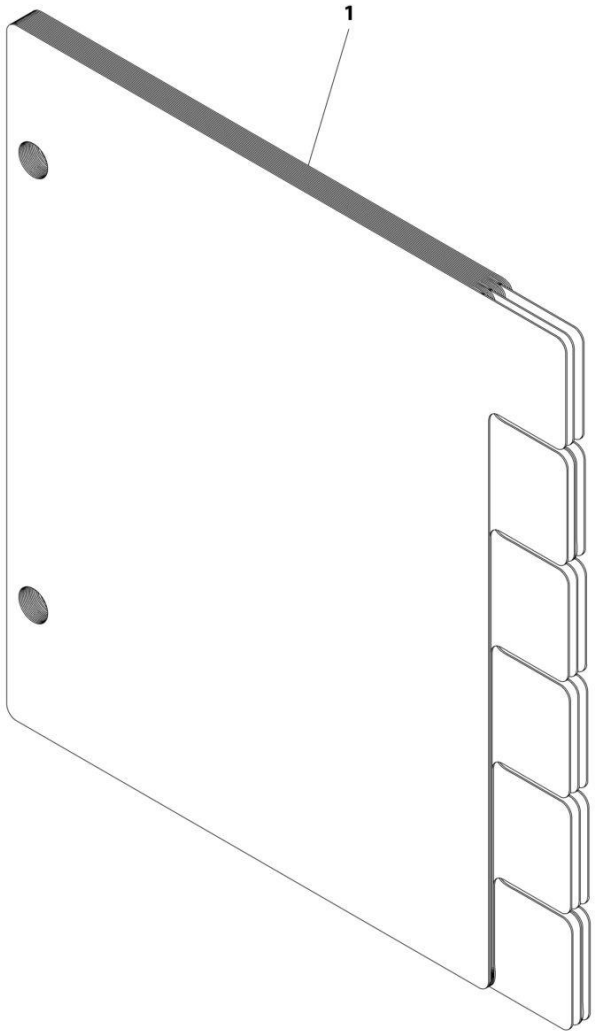

ART_1001282907

FIGURE 11-13. LOAD CHART REMOTE INSTALLATION (ISO)

ITEM	PART NUMBER	QTY	DESCRIPTION	REV
1	1001282907	Ref	LOAD CHART REMOTE (ISO)	A

FIGURE 11-14. CAPACITY CHART HOLDER INSTALLATION

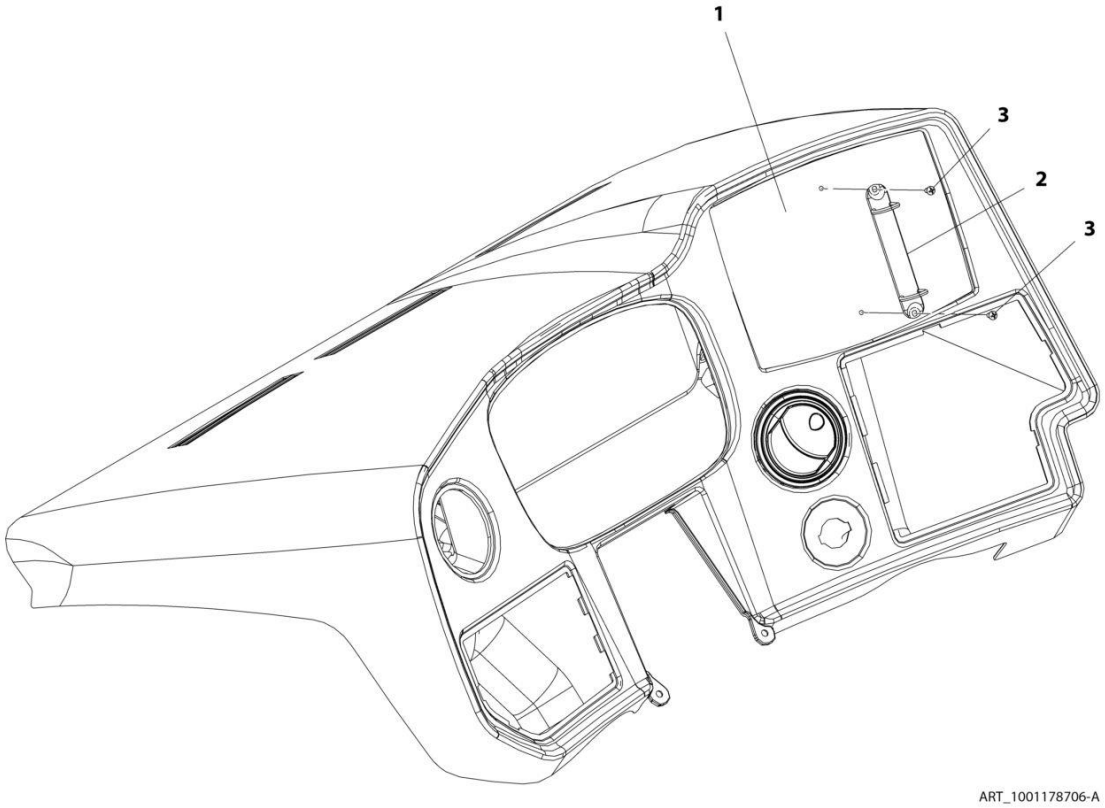

FIGURE 11-14. CAPACITY CHART HOLDER INSTALLATION

ITEM	PART NUMBER	QTY	DESCRIPTION	REV
	1001178706	Ref	Capacity Chart Holder Installation	A
1	1001179297	1	Load Chart, Bezel	
2	1001005960	1	Holder	
3	7029486	2	Screw	

FIGURE 11-15. REVERSE SENSOR SYSTEM DECAL (ENGLISH)

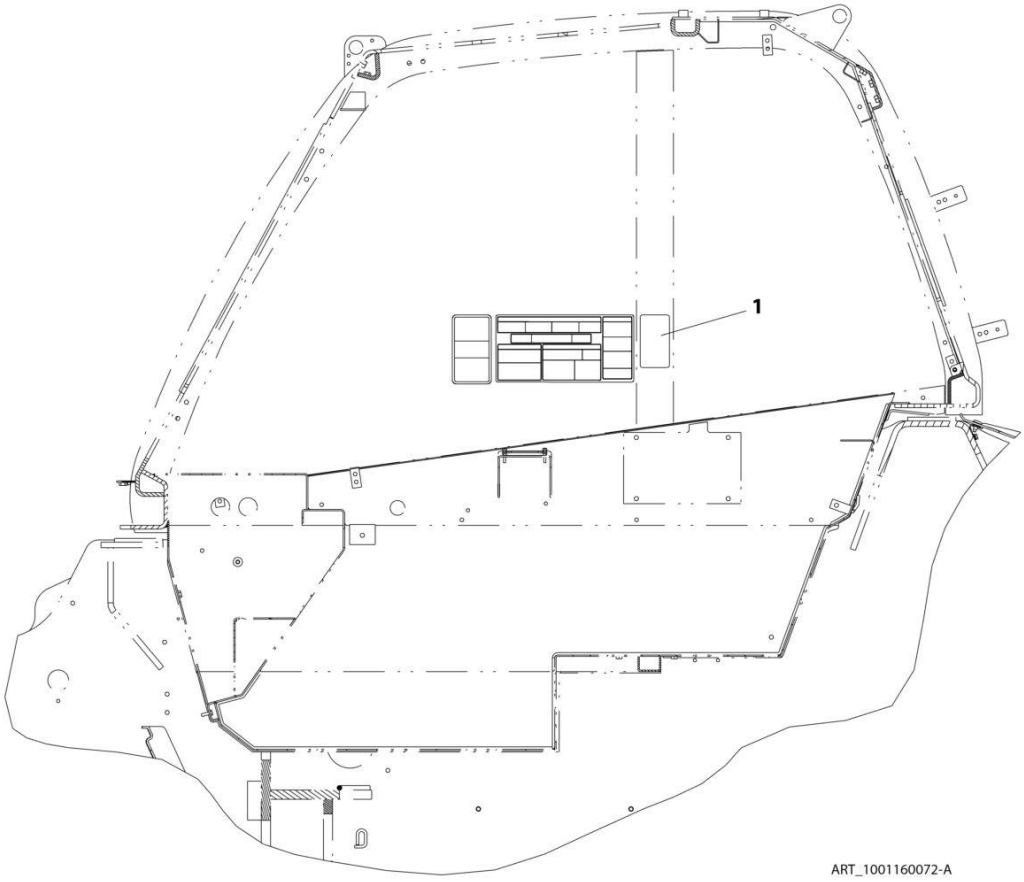

FIGURE 11-15. REVERSE SENSOR SYSTEM DECAL (ENGLISH)

ITEM	PART NUMBER	QTY	DESCRIPTION	REV
1	1001160072	1	Reverse Sensor System Decal (English)	A

FIGURE 11-16. REVERSE SENSOR SYSTEM DECAL (ISO)

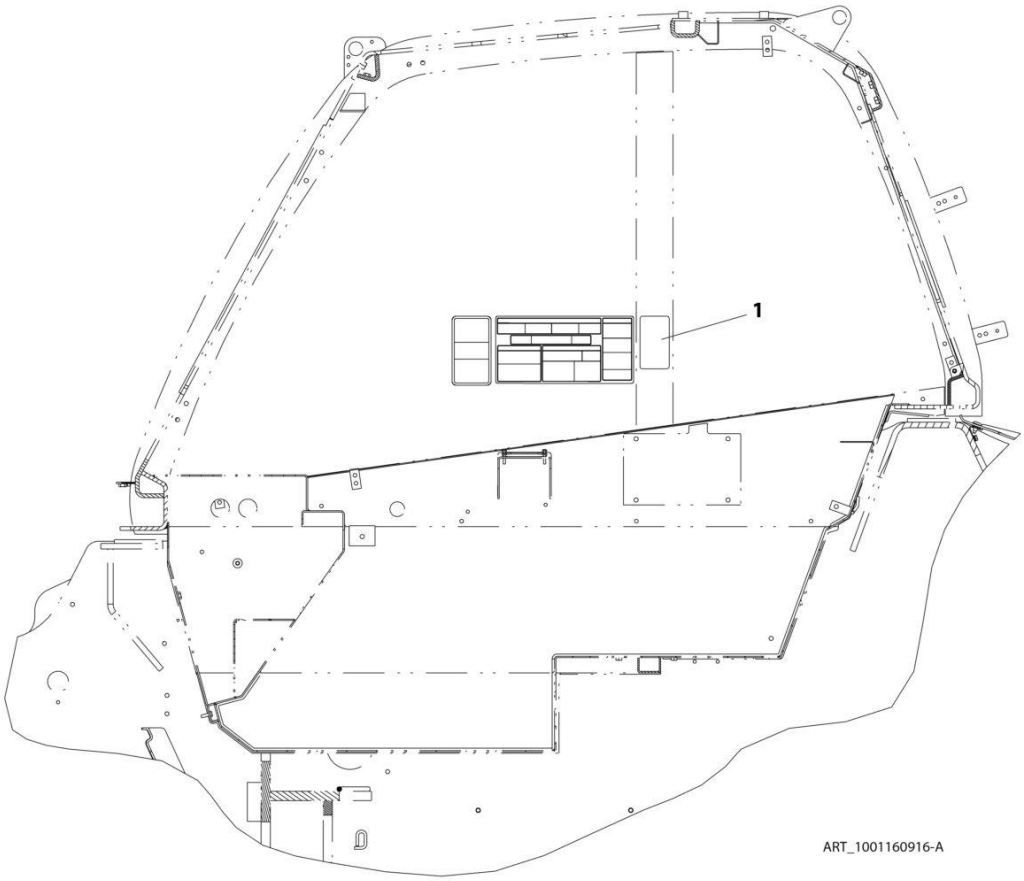

FIGURE 11-16. REVERSE SENSOR SYSTEM DECAL (ISO)

ITEM	PART NUMBER	QTY	DESCRIPTION	REV
1	1001160916	1	Reverse Sensor System Decal (ISO)	A

FIGURE 11-17. REVERSE SENSING SYSTEM DECAL, (ENGLISH/FRENCH)

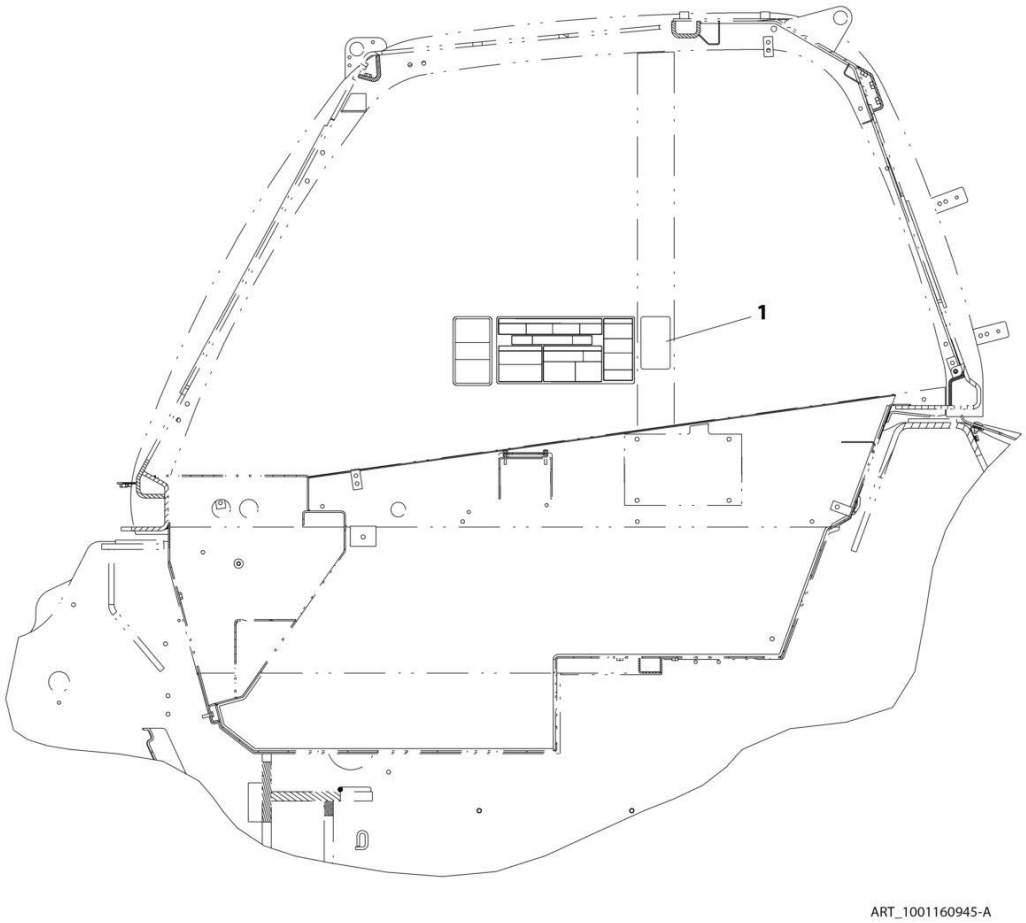

FIGURE 11-17. REVERSE SENSING SYSTEM DECAL, (ENGLISH/FRENCH)

ITEM	PART NUMBER	QTY	DESCRIPTION	REV
1	1001160945	1	Reverse Sensor System Decal (ENGLISH/FRENCH)	A

FIGURE 11-18. CLEARSKY DECAL INSTALLATION

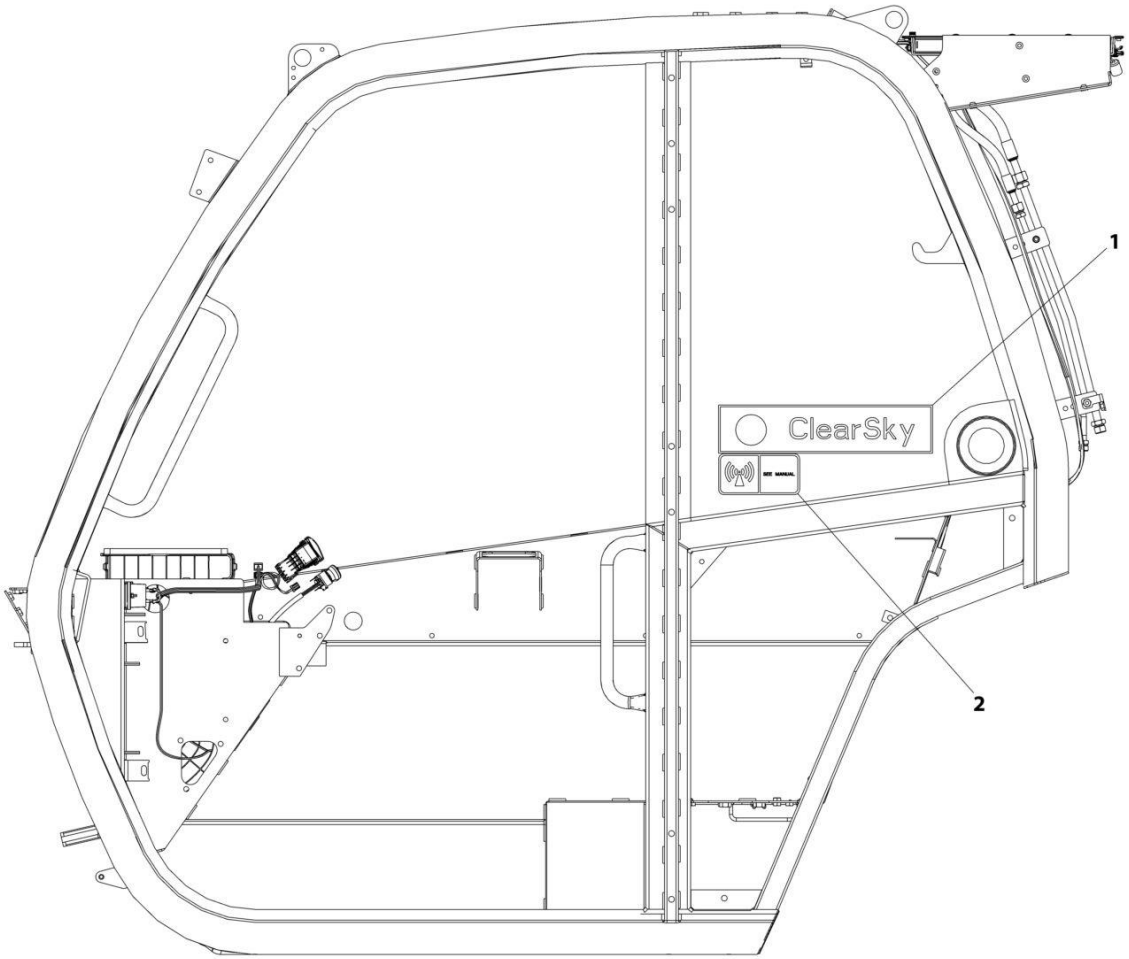

FIGURE 11-18. CLEARSKY DECAL INSTALLATION

ITEM	PART NUMBER	QTY	DESCRIPTION	REV
	1001229707	Ref	Clearsky Decal Installation	C
1	1001294815	1	Decal - ClearSky	
2	1001120989	1	Radio Frequency Decal	

SECTION 12 - RECOMMENDED SERVICE PARTS STOCK

FIGURE 12-1. RECOMMENDED SERVICE PARTS STOCK

ITEM	PART NUMBER	QTY	DESCRIPTION	REV
		Ref	Note: The following list will service one machine (built to current production per date on the front cover) with emergency repair parts which can be installed in the field. Parts from the list should be replaced when inventory is depleted to keep service parts stock supplied. For further information, contact your JLG dealer or the JLG Industries Parts Department.	
		Ref	STANDARD PARTS	
	70002963	1	Coil	
	70020764	1	Coil	
	70020868	1	Coil	
	70021208	1	Coil	
	70022147	1	Coil	
	70026582	1	Coil	
	70028281	1	Coil	
	1001207923	1	Coil	
	1001177597	2	Diode, 6amp	
	1001228872	1	Filter	
	1001243844	1	Filter	
	70026248	1	Filter After Treatment Kit	
	1001187877	1	Filter, Breather	
	70025850	1	Filter, Cylindrical Air Primary	
	70025851	1	Filter, Cylindrical Air Secondary	
	70028450	1	Fuel Filter Assembly	
	8229242	2	Fuse, 5amp	
	8229243	2	Fuse, 7.5amp	
	80983191	2	Fuse, 10amp	
	8229244	2	Fuse, 15amp	
	8229247	2	Fuse, 25AMP	
	8229245	2	Fuse, 30AMP	
	70026295	2	Fuse, 35AMP	
	70026294	2	Fuse, 70AMP	
	70026297	2	Fuse, 80AMP	
	1001095336	2	Fuse, 150AMP	
	70026296	2	Fuse, 200AMP	
	8229235	2	Fuse	
	1001131177	2	Fuse	
	1001205172	1	Relay, 35amp	
	1001117308	1	Relay, 200 Amp	
	1001102502	1	Switch, 4 Position Key	
	1001104654	1	Switch, AUX Decomp	
	1001159746	1	Switch, Auxiliary Electric	
	4360658	1	Switch, Brake Light	
	1001159741	1	Switch, Constant AUX	
	1001192142	1	Switch, Disconnect	
	4360475	1	Switch, E-Stop	
	1001212470	1	Switch, Frame Level	
	1001163639	1	Switch, Light	
	1001159753	1	Switch, Park Brake	
	1001159735	1	Switch, Rear Wiper	

ITEM	PART NUMBER	QTY	DESCRIPTION	REV
	1001159736	1	Switch, Roof Wiper	
	1001159849	1	Switch, Steer Mode	
	1001163695	1	Wiper-Turn Switch	
		Ref	VARIABLE PARTS	
	1001218529	1	Cable, HVAC (Heater & AC)	
	70029597	1	Coil, 12V (Drywall Carriage)	
	1001242098	1	Control, Fingertip Joystick	
	1001270485	1	Controller, LMIS Module	
	0272970	1	Footswitch Assembly	
	8229261	2	Fuse, 5amp (ClearSky Harness)	
	1001222606	1	Joystick, 2R2B	
	2940074	1	Latch (Fork Mounted Basket)	
	1001197667	1	Lever, FNR (2 Speed)	
	1001226328	1	Module, 3W TCU (ClearSky)	
	1001249078	1	Module, Attachment Recognition	
	1001162249	1	Module, Cab	
	1001262322	1	Module, ClearSky Telematics CANBUS	
	1001162253	1	Module, Front Frame	
	1001162256	1	Module, Rear Frame	
	1001248024	1	Module, Transmission	
	1001255826	1	Platform, Console Box	
	70025351	1	Pressure Sensor (Cummins Engine)	
	3740080	1	Relay, Weather Proof (ASOV)	
	70030028	1	Sensor (Front & Rear Axle Steering)	
	70028383	1	Sensor, Angle (Brake Pedal)	
	1001247458	1	Sensor, Boom Angle	
	1001223903	1	Sensor, Boom Length	
	1001121955	1	Sensor, Coolant Level	
	1001188728	1	Sensor, HVAC Thermostat	
	1001162885	1	Sensor, Pressure (Rear Axle Stabilizer & Boom Damping)	
	1001147340	1	Sensor, Pressure Transducer (Frame Hydraulics)	
	1001243960	1	Sensor, Pressure Transducer (Hydrostatic Pump)	
	1001199043	1	Sensor, Pressure Transducer (Outrigger Cylinder)	
	1001183024	1	Sensor, Proximity	
	1001160730	1	Sensor, Rear Axle	
	1001247421	1	Sensor, Reverse	
	1001128478	1	Sensor, Temperature (Hydraulic Tank)	
	1001163095	1	Sensor, Tilt	
	1001256555	1	Sensor, Tilt Dual Axis	
	1001159738	1	Switch (Beacon)	
	1001255706	1	Switch (Cooling Package (ASOV))	
	1001080375	1	Switch (Hydraulic Coupler)	
	1001159745	1	Switch, Boom Ride (Ride Control)	
	1001159739	1	Switch, Boom Worklights	
	70025486	1	Switch, Contact (Standard Seat)	
	1001159737	1	Switch, Fog Lights (Roadlights)	
	1001159845	1	Switch, Front Worklights	
	1001159734	1	Switch, Hazard (Roadlights)	
	70024107	1	Switch, Heater (Air Suspension Premium Seat)	
	1001160326	1	Switch, HVAC On/Off (Heater & AC)	
	1001159925	1	Switch, HVAC Recycle (Heater & AC)	

SECTION 12 - RECOMMENDED SERVICE PARTS STOCK

ITEM	PART NUMBER	QTY	DESCRIPTION	REV
	1001172547	1	Switch, HVAC Rotary 3 Speed (Heater & AC)	
	1001159742	1	Switch, LSI Override	
	1001159846	1	Switch, Rear Worklights	

SECTION 13 - SPECIAL OPTIONS/ACCESSORIES/KITS

FIGURE 13-1. SPECIAL OPTIONS/ACCESSORIES/KITS

ITEM	PART NUMBER	QTY	DESCRIPTION	REV
	See Note	Ref	Note: This list is to accommodate machines ordered with special equipment. Options may not be applicable to all models. For more specific parts information contact JLG Parts Department.	
		Ref	SPECIAL OPTIONS/ACCESSORIES/KITS	
	1001260872	Ref	ASOV Kit	
	1001260871	Ref	Boom Prop Kit	
	1001284890	Ref	Brake Load Sense Rework Kit	
	1001213286	Ref	Cab Display, JLG Kit	
	1001291382	Ref	ClearSky Prep Installation	
	1001148902	1	Electrical Connector Kit - Amp/Tyco Electrical Connectors	
	1001148903	1	Electrical Connector Kit - Deutsch DT Electrical Connectors	
	1001148904	1	Electrical Connector Kit - Deutsch HD Electrical Connectors	
	1001148905	1	Electrical Connector Kit - Packard Electrical Connectors	
	1001148906	1	Electrical Connector Kit - Various Electrical Connectors	
	1001230409	Ref	External E-Stop Kit	
		Ref	Filter Kits:	
	1001264988	Ref	1000 Hours Filter Kit	
	1001264989	Ref	250 Hours Filter Kit	
	1001212845	Ref	Front Cab Guard Kit	
	1001230699	Ref	Radio Ready Kit	
	1001271527	Ref	Reverse Camera Kit	
	1001252304	Ref	Reverse Sensing Kit	
	1001199328	Ref	Roof Wiper Kit	
	1001260867	Ref	Service Kits	E
		Ref	Tools:	
	7002821	1	Crimper	
	7002823	1	Extractor	
	8896941	1	Wire Stripper	
	7004275	1	Seal Tool 1" (For Cylinders)	
	7004276	1	Seal Tool 1-1/2" (For Cylinders)	
	7002826	1	Seal Tool 2" (For Cylinders)	
	1001199380	Ref	Top Cab Guard Kit	
	1001199382	Ref	Top & Front Cab Guard Kit	

PART NUMBER INDEX

SECTION 13 - SPECIAL OPTIONS/ACCESSORIES/KITS

0100011 683
01043892 241
0272970 869
0400075 633
0498748 303
0630615 643
0641405 105
0641608 509, 555
0700408 459, 785, 795
0700605 33
0700610 27, 29, 158, 162, 407, 411, 751, 753
0700612 641, 715, 773
0700614 376
0700616 747
0700617 35
0700618 651, 703
0700620 643
0700810 225
0700812 41, 245, 247, 507
0700814 33, 213
0700817 197, 479, 537
0700818 501, 503, 715, 761
0700819 735
0700820 429, 431, 433, 715
0700821 245, 247
0700823 481
0700824 461
0700826 229
0700827 237
0701010 225
0701011 785
0701012 233
0701014 71, 209, 211, 221, 223, 229, 233
0701016 31, 51, 53, 141, 757, 793
0701017 525
0701018 141, 143
0701020 33, 37, 183, 185, 187, 191
0701026 243
0701027 215
0701028 517
0701215 153, 155
0701216 75, 131, 153
0701220 131
0701227 131
0701631 81, 83, 85
0711015 33, 35
0711016 61
0711214 63
0711215 61
0711216 165
0711217 63
0711219 61
0711230 57
0711626 131
0711629 131
0711630 131
0712029 297
0712444 517
0760405 81, 83, 85
0760507 333, 689
0760512 327
0760605 233, 303, 453, 457
0760607 27, 29, 219, 303, 719, 721
0760608 31, 143, 229, 235, 287, 327, 331, 407, 415, 453, 457, 461, 621, 623, 691, 693
0760610 555, 777
0760612 627, 629
0760615 797
0760807 185, 191
0760808 235, 323, 409, 411, 543, 621, 623, 769
0760810 21, 23, 25, 31, 43, 47, 51, 63, 183, 185, 187, 191, 325, 349, 353, 359, 367, 369, 373, 376, 409, 429, 433, 453, 483, 555, 641, 695, 697, 795
0760812 141, 143, 183, 185, 187, 191, 223, 291, 293, 309, 479, 555, 715
0760814 183, 187, 515, 543
0760815 65, 143, 309, 485, 489
0760823 33, 177
0761008 175
0761009 627, 629, 645
0761010 21, 23, 25, 31, 139, 141, 481, 691, 693, 715, 719, 721
0761011 521
0761012 21, 27, 29, 31, 65, 67, 143, 169, 461, 479, 501, 513, 795
0761014 23, 555, 757
0761015 53, 793
0761015001 343
0761016 155
0761210 75, 183, 185, 187, 191
0761212 695, 697
0761214 33, 223, 235, 245, 247
0761215 183, 185, 187, 191, 769
0761218 183, 185, 187, 191
0762015 779
0770814 455
0771012 63
0771414 257, 569
0772020 261
0791605 197
0860520 105
1001001556 559
1001002946 309
1001002947 309
1001002953 309
1001002957 309
1001003031 61, 63
1001003043 317
1001003301 35
1001003474 483, 491, 493, 495
1001003478 483, 491, 493, 495
1001003803 65
1001003934 553
1001004640 461
1001004723 162, 719, 721
1001005368 319
1001005904 491, 493, 495
1001005960 857
1001006730 423
1001006731 421
1001007056 69, 573
1001008540 691, 693
1001008559 53, 155, 158, 162, 175, 231, 237, 553, 651, 659, 689, 695, 697, 703, 705, 719, 721, 732, 737, 779, 793, 797, 815
1001008742 327
1001008857 309
1001008988 303
1001009163 35
1001009325 63
1001010646 421, 423
1001010647 421, 423
1001010648 421, 423
1001010649 421, 423
1001010650 421, 423
1001014224 513
1001014233 41
1001025749 235
1001025750 243
1001028291 49
1001028308 49
1001028377 49
1001028400 49
1001028415 63
1001047062 303
1001080375 485, 489, 869
1001090343 345, 393
1001091102 53, 793
1001091715 757
1001091716 757
1001091751 681
1001091951 57
1001092481 99
1001092482 99
1001092771 151
1001092877 830, 838, 842
1001092878 830, 838, 842
1001093564 637
1001094516 257
1001095336 717, 868
1001095650 441, 443, 461
1001095804 669, 671
1001095810 105
1001096019 101
1001096020 101
1001096021 103
1001096023 103
1001096024 101
1001096025 103
1001096365 309
1001097051 807
1001097202 287
1001097244 407
1001097540 27, 29, 427
1001097586 317
1001097587 269, 275
1001097810 267, 273
1001098150 400
1001098762 637
1001098769 73
1001099699 333
1001100319 225
1001100379 523
1001101808 621
1001101855 761
1001101895 830, 838, 842
1001102157 45
1001102502 669, 671, 868
1001103012 654
1001103564 659
1001104477 491, 495, 591
1001104498 647, 654
1001104519 655, 673
1001104654 669, 671, 868
1001105638 162
1001105639 162
1001105643 162
1001105886 741
1001107192 303
1001107854 647, 667, 725
1001109053 826, 830, 834, 838, 842
1001110023 493, 495, 601
1001110115 495
1001111076 415
1001111147 415
1001111317 301, 305
1001112612 658, 708, 711, 805
1001112796 685, 805
1001114495 203, 205, 207, 209
1001114803 183, 185, 187, 191
1001116128 397, 779
1001116696 759
1001116697 654
1001116698 654
1001116700 655, 679
1001116716 655
1001116720 745
1001116723 655, 656, 657
1001116725 708

1001116727 ..... 649, 725, 727
1001116728 749
1001116745 649
1001116747 ..... 667, 711
1001116748 657
1001116754 656
1001116763 ..... 667, 725
1001116774 ..... 730, 813
1001116808 ..... 730, 813
1001116810 ..... 712, 730
1001116811 ..... 708, 711
1001116812 ..... 656, 657, 658, 659, 699, 708, 711, 726, 729, 730, 771, 813
1001116815 ..... 659, 677, 699, 813
1001116821 712
1001116950 729
1001116984 658
1001116985 658
1001116986 ..... 657, 659
1001116991 ..... 655, 658, 745
1001116995 657
1001116996 759
1001116997 657
1001116998 658
1001116999 ..... 655, 745
1001117011 ..... 657, 659, 679
1001117021 667
1001117079 658
1001117081 ..... 655, 656, 657
1001117121 673
1001117247 ..... 763, 765
1001117308 ..... 691, 693, 868
1001118323 730
1001118379 657
1001118383 673
1001118384 ..... 655, 656, 657, 658, 659
1001118386 658
1001118387 658
1001118392 759
10011184495 809
1001118684 656
1001118685 673
1001119020 659
1001119467 ..... 353, 369
1001120989 865
1001121726 725
1001121727 ..... 649, 727
1001121955 869
10011223457 654
1001125027 ..... 708, 711
1001125085 707
1001125089 707
1001125117 ... 61, 63, 75, 769
1001125465 779
1001125677 ..... 656, 709, 712, 727, 732
1001126008..... 655, 658, 701, 712, 730, 781, 813
1001126011..... 658, 708
1001126391..... 699
1001126483..... 707, 711, 712
1001126485..... 707, 711, 712
1001126487..... 708
1001126837..... 777
1001128127..... 723
1001128144..... 197
1001128341..... 197
1001128478..... 35, 869
1001128594..... 135
1001129423..... 779
1001129425..... 779
1001130198..... 155
1001130220..... 27, 29
1001130323..... 826, 830, 834, 838, 842
1001130443..... 143
1001130962..... 677
1001131177..... 703, 868
1001131271..... 826, 830, 834, 838, 842
1001132169..... 732
1001132170..... 732
1001132564..... 400
1001133534..... 167
1001136975..... 158, 162
1001136999..... 658
1001137000..... 658
1001137132..... 513
1001137578..... 699
1001138348..... 209, 211
1001139551..... 393
1001139552..... 345
1001139568..... 319
1001139578..... 826
1001139942..... 830, 838, 842
1001141246..... 309
1001141281..... 325
1001141311..... 393
1001141312..... 345
1001141313..... 393
1001141400..... 158, 162
1001141461..... 511
1001141462..... 511
1001141976..... 509, 511
1001143200..... 321
1001143852..... 830, 838, 842
1001144147..... 677, 709, 712, 732, 813
1001144296..... 656, 659
1001144629J..... 105
1001144802..... 199, 201
1001145204..... 217
1001145390..... 69, 573
1001145391..... 67, 69
1001145539..... 376
1001146588..... 237, 651, 683, 703, 705, 719, 721, 763
1001146949..... 475
1001147340..... 545, 869
1001147416..... 483, 491, 493, 495
1001147449..... 400, 403
1001147923..... 727, 729, 731
1001148106..... 707, 711, 726
1001148902..... 872
1001148903..... 872
1001148904..... 872
1001148905..... 872
1001148906..... 872
1001149278..... 400, 403
1001150294..... 353, 355
1001150610..... 639, 708, 711, 781
1001150611..... 639, 708, 712, 730, 731
1001150735..... 657
1001150737..... 657
1001152729..... 501, 513
1001152915..... 301
1001152947..... 301
1001153612..... 708
1001153748..... 551, 603
1001153749..... 811, 817
1001154688..... 23
1001155228..... 299, 303
1001155230..... 838
1001155447..... 325
1001155486..... 393
1001155540..... 141, 183, 185, 187, 191
1001155806..... 781
1001156265..... 461
1001157663..... 237
1001157890..... 625
1001158146..... 669
1001158596..... 359
1001158601..... 353
1001158736C 367
1001158738C 353, 369
1001159028..... 449, 451
1001159728..... 845
1001159734..... 757, 869
1001159735..... 669, 671, 868
1001159736..... 393, 869
1001159737..... 757, 869
1001159738..... 869
1001159739..... 747, 869
1001159741..... 669, 671, 868
1001159742..... 775, 870
1001159743..... 671
1001159745..... 737, 869
1001159746..... 669, 671, 868
1001159753..... 669, 671, 868
1001159845..... 751, 753, 869
1001159846..... 751, 753, 870
1001159849..... 669, 671, 869
1001159881 233
1001159882 233
1001159925 ..... 373, 376, 869
1001160042 376
1001160043 373
1001160072 859
1001160116 131
1001160326 ..... 376, 869
1001160496 429
1001160498 655
1001160499 ..... 725, 729, 731
1001160500 771
1001160502 654
1001160503 ..... 429, 433
1001160506 431
1001160508 323
1001160509 ..... 723, 725, 771
1001160510 ..... 723, 725, 771
1001160730 ..... 779, 869
1001160775 ..... 821, 823
1001160916 861
1001160927 ..... 633, 637
1001160928 ..... 633, 637
1001160945 863
1001161067 405
1001161097 ..... 654, 655, 725, 729, 731, 771
1001161098 ..... 654, 655, 731
1001161099 ..... 654, 655, 725, 729, 731, 771
1001161100 ..... 654, 655, 725, 729, 731, 771
1001161101 ..... 654, 655, 725, 729, 731, 771
1001161252 400
1001161253 400
1001161499 449
1001161672 461
1001161769 ..... 651, 661
1001161770 ..... 651, 663
1001161771 ..... 651, 665
1001161851 403
1001161855 400
1001161896 461
1001161897 461
1001161898 461
1001161920 ..... 203, 205, 207, 209
1001161957 771
1001161958 ..... 725, 729, 731
1001161959 654
1001161963 771
1001161964 ..... 725, 729, 731
1001162212 175
1001162249 869
1001162253 869
1001162256 869
1001162789 327
1001162885 ..... 761, 869
1001162886 655

1001162887.....655
1001162920.....453
1001162922.....453
1001162953.....376, 379
1001163095.....773, 869
1001163104.....63
1001163174.....834
1001163210.....834
1001163212.....834
1001163222.....834
1001163223.....834
1001163285.....834
1001163300.....834
1001163304.....834
1001163323.....834
1001163340.....655
1001163355.....834
1001163637.....197
1001163639.....675, 868
1001163695.....869
1001164402.....715, 717
1001164498.....349
1001164615.....349
1001164655.....323
1001164726.....303
1001165175.....63
1001165194.....699
1001165269.....327, 329
1001165270.....327
1001165273.....329
1001165275.....309
1001165276.....305
1001165309.....731
1001165310.....723
1001165311.....726
1001165327.....329
1001165351.....327
1001165407.....327
1001165416.....327
1001165455.....327
1001165458.....327, 407
1001165637.....325
1001165827.....623
1001166385.....415
1001166416.....209, 211
1001166451.....137
1001166565.....141, 145
1001166634.....305, 309
1001166703.....699
1001166704.....699, 708
1001166715.....143
1001167015.....395, 397
1001167017.....785
1001167266.....379, 381
1001167528.....699, 708
1001167616.....708
1001167620.....699
1001167624.....699
1001167634.....707, 711, 712
1001167641.....707
1001167646.....703
1001167648.....707
1001167649.....707
1001167650.....707
1001167656.....708
1001167657.....708
1001167937..... 313
1001167958..... 303, 313
1001168030..... 183, 185, 187, 191
1001168054..... 453
1001168142..... 461
1001168151..... 461
1001168264..... 291, 293
1001168327..... 376
1001168330..... 376
1001168331..... 376
1001168456..... 376
1001168531..... 367, 679
1001168771..... 137
1001169135..... 367, 371
1001169151..... 376, 667
1001169268..... 469
1001169354..... 465, 467
1001169355..... 467
1001169367..... 467
1001169454..... 33
1001169603..... 400
1001169604..... 400, 403
1001169674..... 821, 823
1001169751..... 465
1001169763..... 469
1001169825..... 701
1001169880..... 305
1001169883..... 307
1001169885..... 307
1001170113J 305, 307
1001170114..... 303, 305
1001170231..... 453
1001170325..... 427
1001170326..... 335
1001170366..... 331
1001170504..... 400
1001170514..... 405
1001170515..... 341, 349
1001170518..... 400
1001170519..... 400, 405
1001170601J 303
1001170944..... 309
1001170993..... 337
1001171037..... 307
1001171179..... 33, 37
1001171182..... 319
1001171183..... 319
1001171635..... 307
1001171756..... 327
1001171767..... 337
1001171808..... 73
1001171874..... 453
1001171962..... 785
1001172035..... 826, 830, 834, 838, 842
1001172088..... 453
1001172094..... 453
1001172146..... 33, 37
1001172147..... 33, 37
1001172193..... 301, 305
1001172401..... 339
1001172495..... 637
1001172496..... 637
1001172547..... 373, 376, 870
1001172550..... 373, 376
1001172553..... 373, 376
1001172693..... 39
1001172755..... 158, 162
1001172774..... 433
1001172953..... 199
1001173257..... 431
1001173298..... 303
1001173344..... 249
1001173411..... 655
1001173703..... 842
1001173965..... 400
1001174295..... 303, 315
1001174320..... 301
1001174321..... 309
1001174356..... 183, 185, 187, 191
1001174652..... 403
1001174653..... 403
1001174655..... 403
1001174712..... 669, 671
1001174741..... 411
1001174795..... 179
1001174800..... 411
1001174801..... 411
1001174983..... 59, 575
1001174984..... 569, 571
1001174987..... 519, 567
1001175201..... 177
1001175267..... 723, 725, 771
1001175347..... 49
1001175470..... 335
1001175471..... 331, 337
1001175477..... 303
1001175733..... 789
1001175776..... 787, 789
1001175903..... 400
1001176002..... 699
1001176004..... 699
1001176121..... 331, 335
1001176272..... 321
1001176273..... 321
1001176333..... 658
1001176338..... 347
1001176626..... 321
1001176935..... 699, 708
1001176945..... 233
1001177047..... 517
1001177597..... 656, 868
1001178123..... 327
1001178159..... 301
1001178160..... 301
1001178170..... 376
1001178680..... 319
1001178681..... 319
1001178706..... 857
1001178776..... 527
1001178783..... 347
1001178791..... 177
1001178826..... 439
1001178933..... 651
1001179008..... 435, 437, 439
1001179009..... 435, 437, 439
1001179080..... 379
1001179081..... 379
1001179130.....379, 383
1001179297.....857
1001179482.....415
1001179483.....415
1001179484.....441
1001179592.....427
1001180263.....431, 433
1001180306.....49
1001180542.....199, 201
1001180553.....199, 201
1001180682.....347
1001180683.....347
1001181128.....691, 693
1001181411.....319
1001181531.....669, 671
1001181625.....199, 201
1001181726.....400, 407
1001181920.....321
1001181921.....321
1001181961.....633
1001182094.....153
1001182123.....321
1001182139.....321
1001182330.....409
1001182529.....367, 371
1001182530.....367
1001182671.....475
1001182839.....777
1001183024.....645, 869
1001183177.....141
1001183448.....83
1001183550.....405
1001183597.....443
1001183831.....141, 143
1001184280.....391
1001184296.....389, 391
1001184297.....389, 391
1001184403.....383
1001184404.....383
1001184405.....383
1001184406.....383
1001184427.....391
1001184439.....303
1001184473.....745
1001184479.....745
1001184491.....809
1001184493.....809
1001184496.....809
1001184551.....656, 711
1001184610.....67
1001184632.....826, 830, 834, 838, 842
1001184835.....703, 809
1001184975.....400
1001185633.....409
1001185870.....400
1001186342.....158, 162
1001187070.....708, 711
1001187073.....731
1001187075.....723, 731, 771
1001187076.....723, 730
1001187077.....699, 815
1001187078.....625, 759, 791, 813
1001187079.....708, 711, 730, 731

1001187080 ..... 726, 731, 771
1001187081 813
1001187335 287
1001187519 559
1001187877 ..... 35, 868
1001188048 287
1001188372 ..... 826, 830, 834, 838, 842
1001188590 ..... 373, 376
1001188592 391
1001188594 ..... 389, 391
1001188602 ..... 389, 391
1001188603 ..... 389, 391
1001188604 ..... 389, 391
1001188610 ..... 389, 391
1001188612 ..... 389, 391
1001188614 ..... 389, 391
1001188618 391
1001188619 391
1001188720 ..... 389, 391
1001188725 ..... 389, 391
1001188728 869
1001188729 ..... 389, 391
1001188733 389
1001188757 131
1001188817 391
1001188818 391
1001188880 ..... 173, 509
1001189023 391
1001189024 391
1001189025 ..... 389, 391
1001189048 391
1001189054 391
1001189182 400
1001189288J ... 279, 281, 283, 285
1001189877 725
1001190631 ..... 167, 539, 541
1001190921 708
1001191091 315
1001191157 35
1001191229 ..... 826, 830, 834, 838, 842
1001191281 ..... 407, 441
1001191282 441
1001191283 ..... 407, 443
1001191284 ..... 407, 445
1001191285 407
1001191310 443
1001191311 445
1001191312 445
1001191313 445
1001191370 407
1001191635 51
1001191789 63
1001191959 445
1001192142 ..... 691, 693, 868
1001192240 441
1001192309 303
1001192364 73
1001192401 805
1001192643 311
1001192644 313
1001192646 303
1001192737 453
1001192766 ..... 303, 311
1001192771 499
1001192772 499
1001193026 237
1001193210 305
1001193516 549
1001193887 47
1001193993 ..... 691, 693
1001194282 461
1001194421 ..... 656, 657, 658, 681
1001194699 299
1001194700 ..... 299, 301
1001194969 23
1001194980 41
1001194981 41
1001195194 61
1001195342 381
1001195343 381
1001195345 381
1001195346 381
1001195385 381
1001195386 381
1001195437 381
1001195438 381
1001195582 ..... 637, 687
1001195587 25
1001195591 ..... 761, 763
1001195655 57
1001195689 730
1001195721 689
1001195737 ..... 61, 63
1001195781 707
1001195782 707
1001195814 ..... 299, 321
1001195816 400
1001195817 400
1001195818 400
1001195820 395
1001195821 397
1001195822 395
1001195823 397
1001195849 826
1001195851 834
1001195855 ..... 826, 830, 834
1001195878 301
1001195923 ..... 133, 135
1001195972 287
1001196076 ..... 349, 369
1001196100 757
1001196806 ..... 826, 834
1001197072 131
1001197139 453
1001197217 417
1001197218 417
1001197219 417
1001197259 ..... 417, 419
1001197667 869
1001197955 19
1001199043 869
1001199328 872
1001199380 872
1001199382 872
1001199670 229
1001200206 813
1001200498 ..... 183, 185, 187, 191
1001200499 ..... 183, 185, 187, 191
1001200538 751
1001200539 753
1001200631 ..... 187, 191
1001200910 797
1001200968 397
1001201162 803
1001201198 715
1001201199 691
1001201269 61
1001201331 327
1001201499 457
1001201500 459
1001201501 ..... 457, 459
1001201597 ..... 761, 773
1001201599 ..... 761, 771
1001201600 ..... 761, 767
1001201601 ..... 773, 783
1001201885 ..... 658, 681
1001202020 499
1001202247 ..... 209, 211
1001202454 671
1001202498 739
1001202519 803
1001202526 ..... 175, 225
1001202617 803
1001202621 785
1001202622 785
1001202730 627
1001202786 ..... 291, 293
1001202986 53, 175, 231, 695, 697, 719, 721, 739, 793
1001203005 169
1001203557 633
1001203558 633
1001203793 ..... 173, 585
1001203797 261
1001203806 265
1001203987 63
1001204060 753
1001204066 309
1001204115 309
1001204120 309
1001204152 501
1001204528 751
1001204530 751
1001204709 439
1001205061 ..... 453, 457
1001205066 297
1001205080 25
1001205172 ..... 708, 868
1001205205 33
1001205532 ..... 303, 309
1001205727 ..... 517, 519
1001205890 569
1001206100 757
1001206110 63
1001206111 61
1001206112 797
1001206349 171
1001206837 631
1001206850 33
1001206875 33
1001206876 33
1001207052 81
1001207053 85
1001207054 87
1001207055 89
1001207058 107
1001207059 109
1001207060 111
1001207061 117
1001207062 127
1001207148 119
1001207149 115
1001207151 121
1001207153 123
1001207154 125
1001207171 ..... 625, 707, 791
1001207172 ..... 59, 63
1001207173 ..... 730, 799
1001207217 826
1001207218 ..... 830, 838, 842
1001207423 65
1001207424 67
1001207425 ..... 65, 67
1001207428 ..... 65, 67
1001207429 ..... 65, 67
1001207430 65
1001207431 ..... 65, 67
1001207432 ..... 65, 67
1001207594 ..... 775, 777
1001207627 47
1001207689 43
1001207854 297
1001207863 687
1001207867 57
1001207923 868
1001207943 33
1001207944 ..... 33, 35
1001207945 35
1001207947 41
1001207963 400
1001208026 33
1001208028 ..... 37, 39
1001208029 39
1001208031 41
1001208192 413
1001208308 400
1001208674 33
1001208676 33
1001208904 ..... 621, 623
1001208905 621
1001208906 787
1001208907 785
1001208908 785
1001209097 711
1001209194 797
1001209346 51
1001209463 415
1001209625 834
1001209690 757
1001209691 757
1001209697 757
1001209862 ..... 605, 607
1001209899 321
1001210281 267
1001210282 501

1001210326.....65, 67
1001210567.....645
1001210769.....267, 273
1001210770.....715, 735
1001210780.....505
1001210801.....505
1001211041.....413
1001211445.....633, 635
1001211503.....241
1001211693.....651
1001211775.....799
1001211884.....241
1001211907.....400
1001212011.....315
1001212047.....435
1001212048.....437
1001212049.....435
1001212050.....437
1001212312.....563, 605
1001212369.....325
1001212418.....549, 551
1001212468.....407
1001212470.....669, 671, 868
1001212845.....872
1001212921.....513
1001213210.....229, 581
1001213237.....249
1001213265.....453, 455
1001213286.....872
1001213331.....309
1001213752.....777
1001213791.....303
1001213988.....651
1001214092.....325
1001214220.....453
1001214401.....777
1001214653.....567
1001214829.....499
1001215121.....675
1001215319.....179, 181
1001215464.....63
1001215531.....309
1001216263.....411
1001216265.....409
1001216267.....411
1001216269.....411
1001216270.....409
1001216757.....471
1001216803.....471
1001216813.....141
1001216974.....353, 359, 367
1001217226.....569
1001217320.....689
1001217467.....153
1001217552.....483
1001217553.....483
1001217757.....217, 219
1001217758.....219
1001217759.....219
1001217930.....169
1001218529.....869
1001218542.....373, 376
1001218659.....826
1001218704.....826
1001218996.....373, 376
1001219082..... 811, 817
1001219211..... 830, 834, 838, 842
1001219212..... 826, 834
1001219220..... 321
1001219863..... 400
1001219865..... 400
1001219905..... 57
1001219953..... 57
1001220286..... 75
1001220329..... 345
1001220338..... 317, 319
1001220339..... 299, 317
1001220507..... 463
1001220859..... 689
1001220861..... 689
1001221057..... 391
1001221058..... 391
1001221059..... 373, 376
1001221295..... 373, 376
1001221318..... 777
1001221319..... 777
1001222188..... 39
1001222190..... 39
1001222606..... 471, 869
1001222741..... 309
1001223265..... 400
1001223453..... 826, 834
1001223455..... 655, 656, 657, 658
1001223456..... 654
1001223457..... 654, 655
1001223459..... 699
1001223628..... 209, 211
1001223903..... 769, 869
1001223968..... 669, 671, 673
1001224127..... 769
1001224128..... 769
1001225317..... 289
1001225656..... 505
1001226328..... 869
1001226481..... 400
1001226681..... 177
1001227077..... 187, 191
1001227133..... 400
1001227186..... 301
1001227187..... 305
1001227188..... 305
1001227287..... 826, 830, 834, 838, 842
1001227334..... 61, 63
1001227337..... 61
1001227670... 81, 83, 85, 87, 89, 107, 109, 111, 115, 117, 119, 121, 123, 125, 127
1001227802..... 303
1001227945..... 461
1001227964..... 187, 191
1001228643..... 187, 191
1001228860..... 47
1001228872..... 175, 868
1001228989..... 751, 753
1001229458..... 811
1001229543..... 303
1001229707..... 865
1001230163..... 315
1001230310..... 826
1001230311..... 834
1001230409..... 872
1001230699..... 872
1001230931..... 657
1001231389..... 141
1001231390..... 141
1001231393..... 505
1001231397..... 625, 791, 799, 815
1001231398..... 625, 681, 711, 730, 791, 799, 815
1001231399..... 791, 815
1001231400..... 625, 681, 711, 730, 799
1001231401..... 625, 791
1001231402..... 625, 791
1001231403..... 791
1001231404..... 625, 681, 711, 730, 791, 799, 815
1001231406..... 625, 681, 711, 730, 791, 799, 815
1001231801..... 826
1001232288..... 691, 701
1001232766..... 479
1001232770..... 479
1001232786..... 59
1001232796..... 59
1001232797..... 57, 59
1001232798..... 59, 61
1001232801..... 57
1001232804..... 59
1001233174..... 795
1001233217..... 795
1001233434..... 795
1001233558..... 834
1001234127..... 539, 541, 599
1001234395..... 627, 629
1001235725..... 553
1001236131..... 21, 23
1001236528..... 221
1001236529..... 235
1001236530..... 233
1001236556..... 221
1001236557..... 221
1001236674..... 695
1001237170..... 215
1001237181..... 221
1001237212..... 654
1001237738..... 629
1001237936..... 183, 187, 193
1001238007..... 703
1001238152..... 225, 227
1001238153..... 175, 225, 227
1001238624..... 203, 205, 207, 209
1001238625..... 203, 205, 207, 209
1001238755..... 235
1001238820..... 131
1001238821..... 131
1001239059..... 719, 721
1001239060..... 719, 721
1001239061.....695, 697
1001239062.....695, 697
1001239070.....177, 221
1001239125.....695, 697
1001239126.....695, 697
1001239127.....695
1001239128.....719
1001239149.....177
1001239165.....177
1001239185.....719, 721
1001239186.....695, 697
1001239187.....695, 697
1001239188.....695, 697
1001239256.....25
1001239257.....21, 25
1001239297.....199
1001239298.....199
1001239301.....221
1001239486.....31
1001239488.....31
1001239489.....31
1001239490.....31
1001239491.....31
1001239492.....31
1001239507.....27, 29, 31
1001239510.....181
1001239511.....181
1001239853.....35
1001239856.....35
1001239953.....703, 707
1001239954.....699, 719
1001241308.....311
1001241314.....49
1001241315.....49
1001241318.....221
1001241324.....39
1001241326.....221, 223
1001241337.....333
1001241350.....35
1001241370.....137
1001241482.....221
1001241610.....797
1001241684.....231
1001241702.....229
1001241704.....231
1001241705.....231
1001241713.....217
1001242098.....869
1001242105.....57
1001242109.....695
1001242340.....153
1001242635.....169, 583
1001242685.....199, 201
1001242686.....539
1001242689.....21
1001242690.....23
1001242692.....23
1001242719.....23
1001242721.....23
1001242723.....23
1001242725.....23
1001242734.....235
1001242739.....233
1001242740.....221, 223
1001242741.....221, 223
1001243013.....165, 169
1001243039.....243

1001243044 ..... 677, 719, 721
1001243540 ..... 187, 191, 625
1001243724 ..... 169, 579
1001243728 175
1001243729 175
1001243771 213
1001243772 213
1001243775 ..... 137, 139
1001243840 239
1001243841 239
1001243844 ..... 35, 868
1001243960 ..... 169, 869
1001243961 ..... 183, 185, 187, 191
1001243978 183
1001243979 221
1001243980 225
1001243981 237
1001243982 ..... 237, 239
1001244036 ..... 255, 265
1001244037 131
1001244039 137
1001244040 141
1001244041 158
1001244043 175
1001244046 245
1001244048 ..... 207, 211
1001244049 165
1001244050 153
1001244051 ..... 183, 185, 187, 191, 197
1001244052 ..... 183, 187, 199
1001244053 ..... 183, 203
1001244057 215
1001244059 ..... 221, 229
1001244060 ..... 221, 231
1001244117 ..... 183, 185, 187, 191
1001244118 ..... 183, 185, 187, 191
1001244174 187
1001244175 ..... 187, 207
1001244192 ..... 751, 753
1001244193 ..... 751, 753
1001244334 769
1001244340 ..... 255, 261
1001244346 627
1001244406 589
1001244407 ..... 169, 589
1001244442 141
1001244443 41
1001244459 41
1001244517 41
1001244524 261
1001244542 59
1001244574 569
1001244877 ..... 757, 759
1001245075 ..... 175, 227
1001245142 225
1001245200 31
1001245201 31
1001245231 ..... 719, 721, 723
1001245234 521
1001245277 141
1001245283 ..... 141, 143
1001245394 ..... 171, 173
1001245691 257
1001245707 31
1001245708 239
1001245757 ..... 221, 233
1001245758 ..... 221, 235
1001245862 515
1001246178 ..... 245, 247
1001246375 ..... 27, 29
1001246376 ..... 27, 29
1001246391 ..... 708, 711
1001246470 515
1001246560 517
1001246561 517
1001246603 515
1001246607 515
1001246609 515
1001246638 651
1001246642 515
1001246643 515
1001246645 515
1001246646 515
1001246648 515
1001246734 27
1001246754 ..... 747, 749
1001246770 23
1001246771 23
1001246800 25
1001246801 23
1001246825 37
1001246830 41
1001246832 ..... 649, 737
1001246882 ..... 241, 635, 687
1001246929 715
1001246960 515
1001246961 515
1001246964 501
1001246965 515
1001246968 515
1001246971 ..... 187, 191
1001246985 643
1001246988 643
1001246989 643
1001246990 643
1001246991 643
1001246997 501
1001246998 501
1001247000 501
1001247001 501
1001247004 501
1001247005 515
1001247006 501
1001247007 501
1001247044 ..... 645, 647
1001247054 ..... 501, 503, 505
1001247056 ..... 27, 29
1001247094 137
1001247103 27
1001247107 513
1001247108 513
1001247109 513
1001247116 513
1001247117 513
1001247118 513
1001247119 513
1001247120 513
1001247123 513
1001247125 513
1001247126 513
1001247127 513
1001247128 513
1001247129 513
1001247130 513
1001247148 ..... 27, 29
1001247155 481
1001247166 513
1001247199 ..... 27, 29
1001247206 ..... 507, 509
1001247208 507
1001247210 507
1001247211 507
1001247212 507
1001247213 507
1001247222 547
1001247223 547
1001247335 343
1001247364 513
1001247366 ..... 183, 185, 187, 191
1001247372 ..... 497, 499
1001247384 ..... 27, 29
1001247414 ..... 27, 29
1001247421 ..... 787, 869
1001247458 ..... 643, 869
1001247501 ..... 687, 739
1001247528 ..... 687, 743
1001247578 235
1001247646 ..... 826, 834
1001247708 499
1001247713 515
1001247736 513
1001247739 513
1001247917 ..... 687, 741
1001247979 499
1001248024 869
1001248204 ..... 761, 769
1001248372 ..... 501, 503
1001248677 499
1001248758 ..... 499, 737
1001248853 47
1001249078 ..... 627, 629, 869
1001249327 297
1001249406 341
1001249631 669
1001250124 623
1001250161 347
1001250171 703
1001250180 ..... 203, 207
1001250181 203
1001250183 ..... 183, 185, 187, 191
1001250184 ..... 183, 185, 187, 191
1001250185 ..... 183, 185, 187, 191
1001250189 211
1001250190 ..... 183, 185, 188, 191
1001250203 ..... 627, 629, 631
1001250276 ..... 627, 629
1001250475 627
1001250476 629
1001250708 ..... 27, 29, 63
1001251142 ..... 627, 629
1001251518 787
1001252304 872
1001252525 ..... 183, 187
1001253072 513
1001253228 513
1001253340 ..... 209, 211
1001253784 515
1001253785 501
1001253797 297
1001254643 643
1001254991 63
1001255087 61
1001255131 419
1001255273 419
1001255278 135
1001255301 343
1001255384 223
1001255385 223
1001255386 223
1001255387 223
1001255538 513
1001255566 217
1001255573 33
1001255581 735
1001255706 ..... 187, 191, 869
1001255723 ..... 187, 191
1001255725 ..... 703, 705
1001255826 869
1001256073 301
1001256264 25
1001256449 263
1001256478 255
1001256479 255
1001256480 255
1001256481 255
1001256482 ..... 255, 263
1001256484 ..... 255, 267
1001256485 ..... 255, 269
1001256486 ..... 255, 273
1001256487 ..... 255, 275
1001256492 185
1001256493 227
1001256496 247
1001256497 155
1001256499 162
1001256500 ..... 185, 191, 201
1001256501 ..... 185, 205
1001256504 ..... 205, 209
1001256505 205
1001256526 243
1001256555 ..... 641, 869
1001256558 ..... 641, 807
1001256622 155
1001256718 139
1001256721 162
1001256899 ..... 627, 629
1001256900 ..... 627, 629
1001256942 ..... 155, 167

1001256951.....757
1001256974.....473
1001256999.....755, 757
1001257071.....473
1001257082.....279, 281
1001257088.....463
1001257090.....25
1001257324.....209, 211
1001257330.....461
1001257346.....513
1001257347.....513
1001257881.....217, 791
1001257983.....59, 563
1001257984.....563
1001257986.....59, 479
1001258014.....523, 531
1001258015.....515
1001258019.....513
1001258065.....515
1001258066.....515
1001258067.....515
1001258068.....515
1001258069.....515
1001258070.....529, 531
1001258071.....529
1001258088.....521
1001258089.....521, 523
1001258090.....537
1001258092.....525
1001258093.....525, 527
1001258094.....527, 595
1001258095.....537, 541
1001258099.....333
1001258101.....479
1001258102.....479
1001258103.....479
1001258104.....479
1001258105.....479
1001258106.....479
1001258114.....481
1001258115.....481
1001258116.....481
1001258117.....289, 291
1001258118.....289, 293
1001258121.....291
1001258122.....293
1001258129.....289
1001258144.....517
1001258145.....517
1001258194.....149
1001258244.....425
1001258245.....425
1001258343.....191
1001258344.....191, 209
1001258345.....209
1001258664.....79
1001258766.....65, 67
1001258767.....67
1001258815.....635
1001258820.....775, 779
1001258821.....779
1001258973.....533
1001259109.....461
1001259205.....797, 799
1001259214.....79
1001259216.....497, 533
1001259224.....801
1001259225..... 79
1001259229..... 461
1001259246..... 797, 801
1001259494..... 719, 721, 725
1001259542.... 81, 83, 85
1001259579..... 151
1001260274..... 53, 793
1001260434..... 515
1001260493..... 535
1001260494..... 499, 535
1001260509..... 809
1001260538..... 483, 491, 493, 495
1001260580..... 53, 793
1001260685..... 53, 793
1001260686..... 53, 793
1001260687..... 53, 793
1001260701..... 53, 793
1001260772..... 91
1001260773..... 93
1001260774..... 95
1001260775..... 97
1001260831..... 497
1001260833..... 499
1001260867..... 872
1001260871..... 872
1001260872..... 872
1001260915..... 497, 499
1001260916..... 497, 499
1001261096..... 71
1001261122..... 71
1001261428..... 501
1001261456..... 515
1001261507..... 75
1001261508..... 75
1001261509..... 75
1001261510..... 75
1001261511..... 75
1001261844..... 497, 499
1001262025..... 483
1001262026..... 485
1001262027..... 487
1001262028..... 489
1001262029..... 485, 491
1001262030..... 487, 493
1001262047..... 489, 495
1001262180..... 645
1001262189..... 485, 489
1001262296..... 531
1001262322..... 869
1001262349..... 185, 191, 195
1001262493..... 641
1001262591..... 201
1001263034..... 533, 535, 557
1001263055..... 641
1001263078..... 641
1001263267..... 223
1001263268..... 223
1001263425..... 201
1001263623..... 49
1001263770..... 705, 711
1001263934..... 513
1001264165..... 721
1001264173..... 721
1001264276..... 697
1001264297..... 483, 491, 493, 495
1001264348..... 51
1001264431..... 747
1001264534..... 795
1001264536..... 795
1001264601..... 693
1001264607..... 705
1001264617..... 279, 283
1001264618..... 281, 285
1001264844..... 659
1001264861..... 659
1001264976..... 385, 387
1001264988..... 872
1001264989..... 872
1001264995..... 715
1001265007..... 53, 793
1001265032..... 25
1001265073..... 283
1001265074..... 283
1001265075..... 285
1001265076..... 279
1001265077..... 279
1001265078..... 281
1001265182..... 283
1001265183..... 285
1001265184..... 279
1001265185..... 281
1001265243..... 757
1001265278..... 821
1001265343..... 763
1001265347.. 51, 53, 793
1001265544..... 53, 793
1001265979..... 795
1001265980..... 795
1001266179..... 826, 830, 834, 838, 842
1001266354..... 545
1001266406..... 826
1001266407..... 834
1001266408..... 830
1001266444..... 515
1001266488..... 369
1001266506..... 543
1001266507..... 543, 545
1001266508..... 543
1001266710..... 531, 597
1001266879..... 557
1001266905..... 761
1001266906..... 761
1001267835..... 515
1001268266..... 479, 639
1001268354..... 797
1001268360..... 59, 781
1001268596..... 29
1001268597..... 29
1001268709..... 847
1001268744..... 369, 681
1001268827..... 373, 385
1001268828..... 385, 389
1001268829..... 385, 387
1001268830..... 385, 387, 745
1001268831..... 376, 387
1001268832..... 387, 391
1001268846..... 400
1001268891.....261, 577
1001269183.....289
1001269247.....719
1001269458.....545
1001269488.....838
1001269489.....842
1001269555.....389, 391
1001269556.....389, 391
1001269558.....389, 391
1001269559.....389, 391
1001269560.....389, 391
1001269561.....389, 391
1001269563.....389, 391
1001269564.....389, 391
1001269578.....391
1001269579.....391
1001269727.....823
1001270013.....643
1001270015.....643
1001270117.....335
1001270123.....53, 793
1001270174.....523
1001270176.....523, 593
1001270193.....671
1001270235.....629
1001270466.....651
1001270467.....715
1001270468.....735
1001270485.....761, 869
1001270486.....715
1001270490.....19
1001270491.....553, 797
1001270492.....553, 555
1001270494.....555, 557
1001270495.....555, 559
1001270496.....553
1001270497.....553
1001270498.....553
1001270499.....553
1001270500.....553
1001270501.....553
1001270976.....373, 376
1001271061.....851, 853
1001271161.....559, 587
1001271256.....53, 793
1001271295.....555
1001271527.....872
1001271623.....559
1001271836.....555
1001272335.....797
1001272339.....553, 815
1001272605.....553
1001272606.....553
1001272607.....553
1001273330.....845
1001273635.....747, 751, 753
1001274111.....105
1001274112.....105
1001274113 99, 101, 103, 105
1001274115.....99
1001274116.....103
1001274117.....101
1001274207.....775
1001274337.....133
1001274533.....745

1001274534 745
1001274535 745
1001274536 745
1001274537 745
1001274538 745
1001274539 745
1001274540 745
1001274541 745
1001274543 745
1001274544 745
1001274553 745
1001275105 ..... 811, 813, 817
1001275106 811
1001275162 ..... 563, 565
1001275929 ..... 349, 351
1001275933 ..... 351, 425
1001277990 845
1001278919 179
1001279087 139
1001279088 143
1001279089 139
1001279090 143
1001279093 143
1001279096 139
1001279128 ..... 143, 147
1001279501 697
1001279682 143
1001280354 143
1001280355 143
1001280381 143
1001280471 ..... 359, 361
1001280631 823
1001280632 823
1001280661 683
1001280666 143
1001280673 821
1001280677 821
1001280679 821
1001281297 251
1001281298 251
1001281301 251
1001281302 251
1001281304 251
1001281311 251
1001281359 251
1001281360 251
1001281380 251
1001281386 251
1001281394 251
1001281399 251
1001281400 251
1001281472 251
1001281647 851
1001281648 851
1001281656 251
1001281888 251
1001282015 ..... 719, 721, 729
1001282230 ..... 651, 654
1001282260 817
1001282265 553
1001282732 849
1001282907 ..... 853, 855
1001282908 853
1001283429 559
1001284782 501
1001284890 872
1001285013 555
1001285715 ..... 669, 671
1001286175 197
1001286599 683
1001286941 ..... 683, 685
1001287804 817
1001288070 ..... 357, 369
1001288098 369
1001289060 683
1001289299 683
1001289300 683
1001289301 683
1001289479 795
1001289559 179
1001289561 ..... 177, 179
1001289647 683
1001289648 683
1001290040 683
1001291056 683
1001291182 ..... 803, 805
1001291382 872
1001294608 795
1001294815 865
1001294830 795
1001294831 795
1001295269 795
1001295491 ..... 257, 259
1001295916 ..... 255, 257
1001298048 795
1001302410 795
1001305479 113
1012266900 ..... 269, 271
1012667300 ..... 275, 277
1060379 ..... 79, 105
1060626 ..... 637, 741
1060799 ..... 851, 853
1062255 ... 217, 513, 515, 703, 705, 811, 817
10732931 595
10837928 595
10837953 595
120034 651
1320022 376
1320136 233
1321797 135
1322073 ..... 133, 135
1322181 135
1670836 ... 826, 830, 834, 838, 842
1701500 ... 826, 830, 834, 838, 842
1701509 105
1702631 ... 826, 830, 834, 838, 842
1702773 ..... 99, 101, 103
1704260 ..... 689, 801
1704277 105
1704885 ..... 99, 101, 103
1705980 .... 830, 838, 842
1706098 .... 830, 838, 842
1706281 .... 830, 838, 842
1706282 .... 830, 838, 842
1706284 .... 830, 838, 842
1706285 .... 830, 838, 842
1706288 .... 830, 838, 842
1706292 .... 830, 838, 842
1706296 826
1706299 826
1706300 826
1706301 826
1706302 826
1706306 826
1706768 826
1706850 826
1706892 99
1707078 826
2080040 105
2080078 319
2080086 301
2080087 301
2080092 331
2110408 ..... 523, 547
2110410 505
2110604 ..... 173, 531
2110606 ..... 67, 539, 541
2110610 ..... 491, 495
2110808 .... 267, 273, 523, 551, 557
2110810 ..... 505, 531
2111010 .... 491, 493, 495, 553, 605
2111016 553
2111212 .... 479, 509, 527, 535
2112016 527
2130404 .... 461, 523, 531, 533, 535, 589
2130408 547
2130606 .... 527, 539, 541, 545, 557
2130808 .... 267, 273, 461, 557, 589
2131010 ..... 499, 535
2131210 169
2131212 ..... 479, 533
2131616 ..... 533, 535
2144603 257
2144605 261
2150606 545
2150808 ..... 531, 551, 559
2151010 ..... 491, 493, 495
2151210 589
2151616 513
2160016 .. 61, 65, 67, 517, 569
2170106 ..... 519, 527
2170112 527
2170206 527
2170208 461
2170216 513
2170306 545
2170406 ..... 531, 539, 541
2170410 499
2170704 501
2170706 ..... 173, 539, 545
2170716 513
2170806 ..... 267, 273
2171106 515
2171716 513
2171733 ..... 513, 515
2171824 515
2171840 513
2172106 ..... 531, 541, 545
2172410 499
2180104 139
2180467 197
2200223 ..... 183, 187
2200224 ..... 183, 187
2220218 167
2220237 ... 183, 185, 187, 191
2220239 ..... 35, 39, 505
2220240 35
2220810 167
2220886 531
2221116 545
2221231 ..... 267, 273
2400060 813
24921332 ..... 221, 223
2580062 743
2600281 105
2717162 515
2940074 ..... 105, 869
31200160 99
31200386 101
31200387 103
31200388 103
314689 ..... 59, 563
3251813 ... 826, 830, 834, 838, 842
3290401 ..... 53, 373, 376, 407, 683, 785, 793, 795
3290405 ..... 311, 763
3290501 ..... 651, 787
3290505 ..... 75, 333, 473, 475, 627, 629, 705, 811, 817
3290601 ... 158, 162, 376, 407, 411, 453, 521, 555, 621, 623, 651, 695, 697, 747
3290605 ... 400, 407, 445, 627, 629, 641, 643
3290605001 ..... 53, 793
3290607 757
3290801 ... 143, 183, 185, 187, 191, 223, 303, 449, 555, 769
3290805 25, 41, 455, 495, 735
3290806 319
3291001 . 25, 31, 53, 141, 183, 185, 187, 191, 233, 757, 793
3291005 ..... 73, 183, 185, 187, 191, 517, 691, 693
3291205 57
3291605 .... 57, 81, 83, 85
3300449 683
3311005 797
3311405 105
3311505 349
3311508 637
3331615 131
3332011 297
3421453 105
3422661 79
3520072 105
3520193 61
3520198 105

3575947.....215
3740067.....555
3740080....625, 681, 712, 731, 791, 799, 815, 869
3760170.....105
3760348.....453
3790152.....169, 209, 211
3820020.....105
3900248.....553
3900368.....529
3900379.....27, 29, 427
3911010.....797
3931616.....243
3986610.....371
3986643.....371
4010410002.....53, 793
4010416.....643, 763
4010510.....471
4010608002 53, 301, 303, 341, 349, 400, 411, 415, 793
4010610002 53, 397, 400, 411, 793
4010612002.....305, 400, 407, 443, 445
4031505001.....53, 793
4031507.....53, 793
4031607 35, 39, 473, 703, 705
4031608.....405
4031608001.....400
4031707.....769
4031708001.....395
4031907.....683
4031910.....431, 433
4031912.....547, 549
4031916.....169, 563
4031918.....485, 487, 489
4031922.....497, 499
4032009.....643
4032011.....57
4032314.....171
4060804.....23
4060918.....49
4060919.....49
4092006.....343
4100181....826, 830, 834, 838, 842
4105262.....73
4109801....826, 830, 834, 838, 842
4110422.....117
4240018.....501, 515
4240032.....795
4240099....501, 515, 739, 741
4360475.....689, 801, 868
4360657.....797
4360658.....459, 868
4460183.....801
4460225.....654, 655
4460234.....553, 651, 795
4460265.....654
4460267.....654, 655, 656
4460268.....654, 655, 656
4460320.....656, 801
4460343.....654, 655
4460424..... 656
4460434..... 654
4460458... 625, 649, 656, 659, 708, 711, 725, 749
4460464... 625, 631, 639, 647, 654, 656, 658, 667, 673, 677, 681, 699, 707, 708, 711, 712, 726, 730, 749, 759, 767, 771, 781, 783, 789, 791, 799, 805, 813, 815
4460465... 631, 639, 649, 654, 655, 656, 657, 658, 659, 677, 679, 685, 699, 707, 708, 711, 712, 725, 726, 729, 730, 731, 767, 771, 781, 799, 805, 813
4460466... 625, 639, 654, 655, 656, 657, 658, 659, 673, 677, 685, 699, 707, 708, 711, 712, 725, 726, 729, 730, 731, 749, 755, 759, 771, 781, 783, 791, 799, 805, 813
4460475..... 625
4460496..... 651
4460497..... 651
4460508..... 708, 711
4460509.... 712, 725, 731
4460518... 658, 659, 712, 730, 731, 813
4460536... 654, 681, 726, 767, 771
4460539... 654, 657, 658, 659, 699, 726, 729, 730, 731, 767, 771, 813
4460608..... 708, 711
4460670..... 813
4460705..... 655
4460742..... 625
4460744..... 725
4460746.... 656, 659, 711
4460748..... 708
4460789.... 667, 708, 711
4460836.... 655, 707, 726
4460837..... 726
4460884... 658, 677, 699, 725, 730, 731, 771, 781, 783, 805
4460891... 625, 649, 659, 677, 699, 707, 708, 711, 712, 726, 729, 730, 731, 781
4460894... 631, 639, 655, 657, 679, 707, 712, 725, 729, 755, 799
4460897... 656, 659, 677, 679, 708, 712, 730, 731, 791, 815
4460899... 625, 667, 673, 708, 712, 726, 731, 771, 781, 799
4460906..... 655
4460928.... 658, 730, 807
4460929..... 807
4460930... 658, 685, 699, 707, 725, 781
4460931... 639, 658, 659, 726, 783
4460932... 625, 631, 647, 677, 727, 731, 749, 765, 771, 789, 791
4460933... 655, 656, 707, 712, 725, 726, 730, 731, 813
4460941... 667, 677, 726, 755, 759, 791
4460942... 655, 677, 725, 729, 730, 731, 755, 771, 781
4460943... 639, 658, 677, 679, 781, 813
4460944... 639, 656, 657, 658, 659, 699, 707, 711, 726, 730, 771, 781, 783
4460945... 659, 699, 727, 731, 813
4460950..... 699
4460970... 699, 727, 732, 755, 759
4460984.... 699, 708, 781
4460994..... 656, 657
4461000..... 689
4461006..... 708
4461015..... 677, 730
4461017.... 639, 727, 781
4461018..... 639, 725
4461054..... 759
4461070.... 708, 712, 781
4461077..... 781, 807
4461095.... 707, 711, 781
4461115..... 659, 749
4461118..... 667, 725
4461261..... 708, 711
4461262..... 647, 654
4461290.... 655, 701, 730
4641316..... 545
4641520..... 547
4711000..... 797
4711400..... 105, 683
4711500..... 543
471678 57, 327, 479, 641
4740274... 183, 185, 187, 191
4740428..... 683
4740532..... 165
4740550... 183, 185, 187, 191
4807718..... 345
4811400 . 81, 83, 85, 373, 376, 407, 459, 643, 683, 763, 785, 795
4811600..... 75, 333, 400, 627, 629, 689, 705, 787, 811, 817
4811602001..... 53, 793
4811700... 27, 29, 31, 33, 35, 158, 162, 229, 235, 287, 301, 303, 327, 341, 349, 376, 395, 397, 407, 411, 415, 453, 457, 521, 621, 623, 627, 629, 641, 643, 651, 691, 693, 695, 697, 703, 715, 719, 721, 747, 751, 753, 757, 773, 777, 797
4811700001.....400
4811702 27, 29, 143, 287, 331, 411, 453, 457, 461, 555
481170200153, 303, 305, 400, 793
4811900....25, 31, 33, 43, 47, 51, 141, 143, 177, 183, 185, 187, 191, 197, 223, 225, 229, 235, 237, 245, 247, 303, 309, 323, 325, 349, 353, 359, 367, 369, 376, 409, 429, 431, 433, 449, 453, 461, 479, 481, 495, 501, 503, 507, 621, 623, 641, 643, 683, 695, 697, 715, 735, 761, 769, 795
4811902....21, 23, 41, 63, 183, 185, 188, 191, 213, 373, 376, 409, 411, 555
4812000....25, 27, 29, 31, 33, 35, 51, 53, 57, 61, 63, 65, 67, 71, 73, 139, 141, 143, 155, 169, 175, 209, 211, 215, 221, 223, 225, 229, 233, 243, 461, 479, 481, 501, 509, 513, 517, 521, 525, 555, 627, 629, 643, 645, 691, 693, 715, 719, 721, 757, 793, 795
4812002....21, 23, 33, 37, 141, 143, 183, 185, 187, 191
4812100 33, 57, 131, 153, 155, 223, 235, 245, 247, 695, 697
4812102....183, 185, 187, 191, 289
4812300.....57, 131
4812500.....297, 779
4831400....373, 376, 407, 683
4831600.....35, 703
4831700.....27, 29, 411
4831900....213, 245, 247, 373, 376, 453
4832100....183, 185, 187, 191
4891600.....555
4892600.....269, 275
5220600.....753
5220800.....633, 637
5240600.....769

5240800 ... 483, 515, 537, 555
5241000 785
5241400 257
5241600 ..... 171, 257
5242000 297
5242400 517
5250608 381
5271609 787
5272012 779
643191201 654, 655, 732, 771
643191301 771
643201301 ..... 654, 732
70002955 599
70002963 .. 597, 599, 868
70004595 593
70006356 579
70020348 135
70020351 135
70020358 135
70020764 . 493, 591, 601, 868
70020867 603
70020868 868
70021208 868
70021251 355
70021252 355
70021314 ..... 361, 363
70021316 ..... 361, 363
70021317 361
70021318 361
70021319 ..... 361, 365
70021320 361
70021321 ..... 361, 365
70021322 361
70021323 ..... 361, 365
70021324 ..... 361, 365
70021325 ..... 361, 365
70021326 ..... 361, 365
70021327 ..... 361, 365
70021328 ..... 361, 365
70021329 361
70021330 ..... 361, 365
70021531 .. 493, 591, 601
70021794 135
70021795 135
70021805 135
70021806 135
70022007 595
70022014 595
70022019 595
70022034 355
70022147 868
70022637 135
70022641 135
70022845 135
70023179 371
70023181 371
70023182 371
70023184 371
70023186 371
70023189 371
70023443 ..... 133, 135
70024107 ..... 371, 869
70024164 573
70024165 573
70024166 573
70024167 573
70024168 573
70024186 585
70024201 595
70024284 133
70024313 135
70024317 135
70024459 371
70024847 595
70024856 371
70024857 371
70024858 371
70024859 371
70024861 371
70025351 ..... 133, 869
70025483 355
70025485 355
70025486 ..... 355, 869
70025489 355
70025490 355
70025491 355
70025539 363
70025816 451
70025817 451
70025850 ..... 145, 868
70025851 ..... 145, 868
70025854 595
70025859 455
70025860 455
70026081 ..... 193, 195
70026244 ..... 133, 581
70026245 ..... 133, 581
70026247 ..... 133, 581
70026248 .. 133, 581, 868
70026292 661
70026293 663
70026294 ..... 717, 868
70026295 ..... 717, 868
70026296 ..... 717, 868
70026297 ..... 717, 868
70026354 193
70026357 ..... 193, 195
70026359 ..... 193, 195
70026369 595
70026370 595
70026372 595
70026373 595
70026376 595
70026379 595
70026383 595
70026395 145
70026396 145
70026434 455
70026533 135
70026557 135
70026582 ..... 603, 868
70026777 595
70026778 595
70026779 595
70026781 595
70026783 595
70026784 595
70026785 595
70027024 351
70027026 351
70027027 351
70027028 351
70027030 351
70027032 351
70027033 351
70027035 351
70027392 363
70027393 363
70027394 ..... 361, 363
70027395 361
70027399 361
70027595 585
70027596 ..... 493, 601
70027705 581
70027706 581
7002821 872
7002823 872
70028243 593
7002826 872
70028281 ..... 535, 868
70028282 ..... 533, 535
70028286 595
70028287 595
70028296 595
70028297 595
70028299 595
70028300 595
70028317 575
70028326 371
70028381 455
70028382 455
70028383 ..... 455, 869
70028414 593
70028416 593
70028422 607
70028450 ..... 133, 868
70028502 593
70028503 593
70028504 593
70028546 667
70028548 ..... 193, 195
70028550 ..... 193, 195
70029429 135
70029430 135
70029431 135
70029597 869
70029872 595
70029873 595
70029874 595
70029919 ..... 133, 135
70029976 597
70029977 597
70029978 597
70029979 597
70030028 869
70030036 599
70030054 577
70030055 577
70030056 577
70030057 577
70030058 577
70030059 577
70030060 577
70030061 577
70030063 577
70030064 583
70030065 583
70030066 583
70030067 583
70030068 583
70030069 583
70030070 583
70030071 583
70030077 583
70030078 583
70030079 583
70030080 583
70030082 583
70030086 193
70030087 ..... 193, 195
70030109 571
70030110 571
70030111 571
70030112 571
70030113 ..... 571, 575
70030114 571
70030115 567
70030116 567
70030117 567
70030118 567
70030119 567
70030120 567
70030146 135
70030164 135
70030167 135
70030168 135
70030169 135
70030241 595
70030242 595
70030243 595
70030244 595
70030245 595
70030246 595
70030267 575
70030268 575
70030269 575
70030270 575
70030271 575
70030272 575
70030278 577
70030287 195
70030288 195
70030289 545
70030293 595
70030305 585
70030306 585
70030310 135
70030311 135
70030312 135
70030313 135
70030314 135
70030315 135
70030316 135
70030321 593
70030322 593
70031049 ..... 53, 793
70031050 361
70031051 361
70031052 361
70031053 361
70031054 361
7004275 872
7004276 872
70050473 595
70050475 595

7011367.....589
7022390.....535, 599
7026798.....351
7028621.....371
7028938.....133, 135
7029128.....133
7029486.....395, 397, 857
7029767.....355
7300435.....131
77133137.....479
77133279.....479
77384830.....135
8000759.....319
8000803.....303
8002200.....61, 63
8004398.....319
8005901.....397
8008640.....61, 63
80233218.....453
80264002.....361, 363
80264004.....361, 363
80333151.....453
8034697.....595
80363195.....323
80604017.....679
806253.....43
806264.....43
80933367.....137, 139
80963067.....708
80983191..661, 663, 665, 708, 712, 868
82033995...175, 225, 227
8220029.....712
8220050..... 745
8220051.... 656, 657, 731
8220097..... 708
8220098..... 708
8220108..... 701
8220124..... 708, 711
8229234..... 799, 815
8229235..... 625, 868
8229237..... 791
8229242... 661, 663, 708, 712, 813, 868
8229243.... 708, 712, 868
8229244... 665, 708, 717, 868
8229245.... 661, 717, 868
8229247.... 663, 717, 868
8229261..... 869
8278020... 183, 185, 187, 191
8305919... 219, 331, 400, 411
8307219..... 219
8310410..... 683
8310559..... 315
8310686..... 547, 549
8342813..... 45
8405006..... 35, 501, 515
8405007... 199, 201, 507, 513, 515
8405009.... 177, 453, 553
8405101..... 199, 201
8405103..... 513
8405104..... 515
8405201... 199, 201, 400, 403
8405202..... 199, 201
8405212... 203, 205, 207, 209, 211
8405305... 203, 205, 209, 211
8405402..... 137, 139
8406101..... 175, 641
8406102..... 501
8406112..... 158, 162
8410009... 225, 227, 249, 373, 376, 513
8410013... 175, 199, 201, 497, 499, 515, 553
8420213..... 559
8430032... 531, 539, 541, 545
8430033... 531, 539, 541, 545
8430034..... 167
8430081..... 531
8430099..... 501
8466306..... 339, 838
8584003..... 803
86671583..... 223
86683122..... 241
86883127..... 221, 223
8750024.... 245, 247, 481
8750025..... 245, 247
8750035..... 481
8760550... 483, 491, 493, 495
8769122.....65
8769123.....65, 485, 489
8769126.....485, 489
8770050.....527
8770075.....483
8770136.....559
8770215.....59
8770241.....257
8770247.....169
8770248.....261
8786549....279, 281, 283, 285
88662327.....527
88662434.....515
88662447.....547
8880218-OM.....263, 265
8896941.....872
90028631.....137, 139
90200849.....149
90206202.....49
91013191.....726
91013192.....723, 730
91403193.....255
91413025.....137, 139
91504107.....679
91513266.....289
91514118.....289
91574001.....573
AU2105.....826, 830, 834, 838, 842

Corporate Office
JLG Industries, Inc.
1 JLG Drive
McConnellsburg, PA 17233-9533 USA

(717) 485-5161 (Corporate)
(877) 554-5438 (Customer Support)
(717) 485-6417

Visit our website for JLG Worldwide Locations.
www.jlg.com

OSHKOSH™