Illustrated Parts Manual

1200SJP, 1350SJP

PVC 2407

3122321000

July 1, 2024 - Rev A

ANSI
AS/NZS

English (en-US)

REVISION LOG

July 1, 2024 - A - Original Issue of Manual (Edited to B/M 1001261213 Revision AE and Revision K)

GENERAL INFORMATION

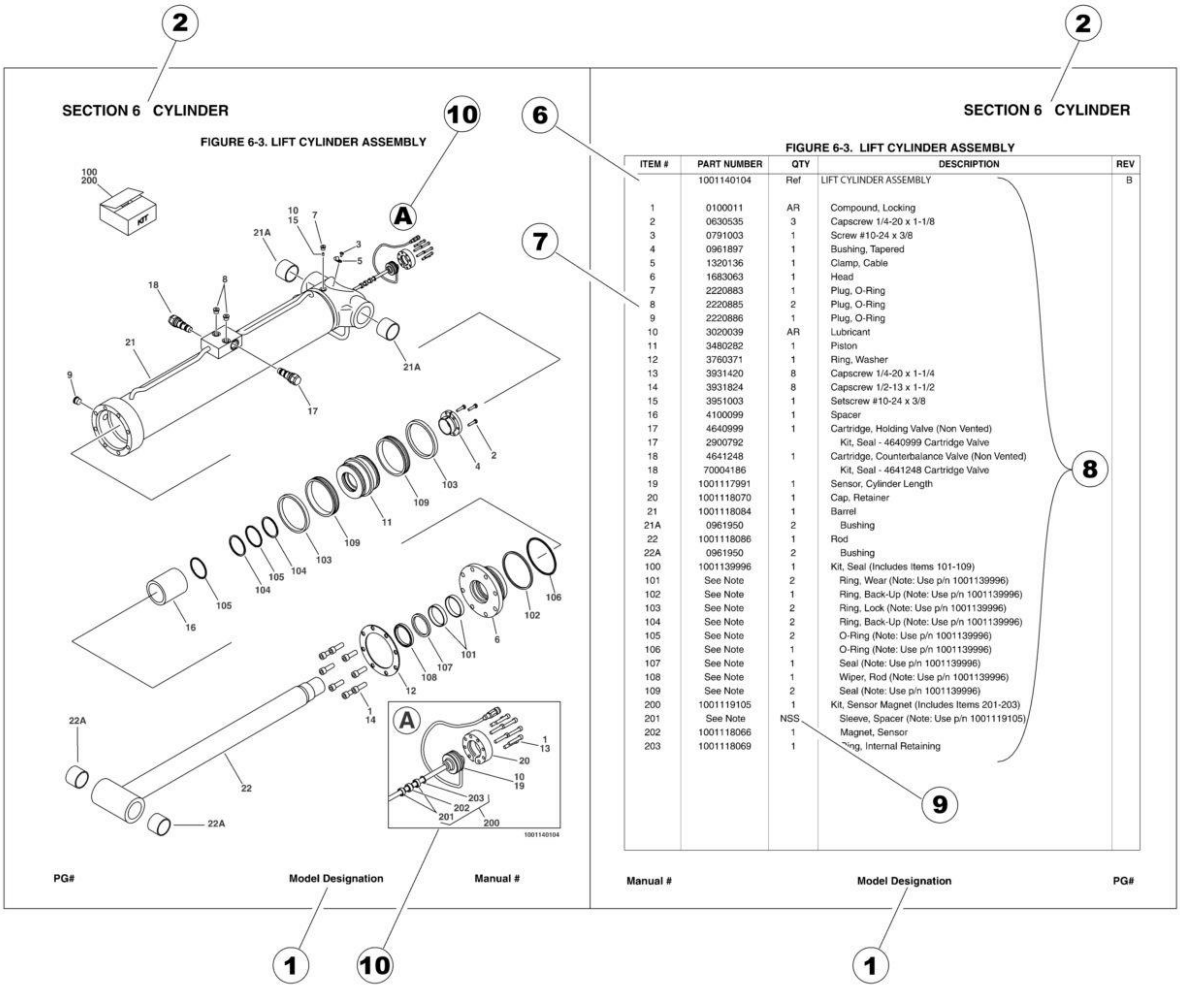

ITEM #	PART NUMBER	QTY	DESCRIPTION	REV
	1001140104	Ref	LIFT CYLINDER ASSEMBLY	B
1	0100011	AR	Compound, Locking	
2	0630535	3	Capscrew 1/4-20 x 1-1/8	
3	0791003	1	Screw #10-24 x 3/8	
4	0961897	1	Bushing, Tapered	
5	1320136	1	Clamp, Cable	
6	1683063	1	Head	
7	2220883	1	Plug, O-Ring	
8	2220885	2	Plug, O-Ring	
9	2220886	1	Plug, O-Ring	
10	3020039	AR	Lubricant	
11	3480282	1	Piston	
12	3760371	1	Ring, Washer	
13	3931420	8	Capscrew 1/4-20 x 1-1/4	
14	3931824	8	Capscrew 1/2-13 x 1-1/2	
15	3951003	1	Setscrew #10-24 x 3/8	
16	4100099	1	Spacer	
17	4640999	1	Cartridge, Holding Valve (Non Vented)	
17	2900792		Kit, Seal - 4640999 Cartridge Valve	
18	4641248	1	Cartridge, Counterbalance Valve (Non Vented)	
18	70004186		Kit, Seal - 4641248 Cartridge Valve	
19	1001117991	1	Sensor, Cylinder Length	
20	1001118070	1	Cap, Retainer	
21	1001118084	1	Barrel	
21A	0961950	2	Bushing	
22	1001118086	1	Rod	
22A	0961950	2	Bushing	
100	1001139996	1	Kit, Seal (Includes Items 101-109)	
101	See Note	2	Ring, Wear (Note: Use p/n 1001139996)	
102	See Note	1	Ring, Back-Up (Note: Use p/n 1001139996)	
103	See Note	2	Ring, Lock (Note: Use p/n 1001139996)	
104	See Note	2	Ring, Back-Up (Note: Use p/n 1001139996)	
105	See Note	2	O-Ring (Note: Use p/n 1001139996)	
106	See Note	1	O-Ring (Note: Use p/n 1001139996)	
107	See Note	1	Seal (Note: Use p/n 1001139996)	
108	See Note	1	Wiper, Rod (Note: Use p/n 1001139996)	
109	See Note	2	Seal (Note: Use p/n 1001139996)	
200	1001119105	1	Kit, Sensor Magnet (Includes Items 201-203)	
201	See Note	NSS	Sleeve, Spacer (Note: Use p/n 1001119105)	
202	1001118066	1	Magnet, Sensor	
203	1001118069	1	Ring, Internal Retaining	

1) MACHINE IDENTIFICATION

Machines are identified by model and in some cases a combination of models, serial number (SN) or regional standard (i.e ANSI, CE,CSA). Components may also be identified by SN or manufacturer. Common components that may be identified by these characteristics are engines and hydraulic components.

2) PARTS MANUAL ORGANIZATION

Product information in this manual is organized under section titles. Frame, Cylinder, Hydraulic and Electrical are a few examples. Each section is organized by figure and page number. The information within the Figure is then organized by item number, part number, description and corresponding illustration (s).

3) TABLE OF CONTENTS (NOT SHOWN)

A table of contents is found toward the beginning of the manual. Figure number, description and page number are provided for quick reference to the page containing the related information.

4) RECOMMENDED SPARE PARTS (NOT SHOWN)

The Recommended Spare Parts List, located near the end of the manual, reference most frequently used maintenance parts.

5) PART NUMBER INDEX (NOT SHOWN)

A numerical index listing all part numbers and the corresponding page number(s) appears at the back of the manual.

GENERAL INFORMATION

6) NON-SERVICED PARTS

In some instances, it is necessary to display non-serviced parts, assemblies or installations. In the case of assemblies and installations there will be a Ref in the Qty. column. In case of parts that are not available for service within assemblies or components, there will be a NSS (Not Sold Separately) or NLA (No Longer Available) listed in the Qty. column of the manual.

7) PARTS LIST ITEM NUMBERS

Numbers shown in the item# column correspond to numbers used in the associated illustration (s). Item numbers which are missing from the sequence in the parts list are not used on that page.

8) INDENTED PARTS DESCRIPTION

An indented part description is included in the item under which it is indented.

9) ABBREVIATION AND SYMBOLS

AC..... Alternating Current
ADE.....Advanced Design Electronics
AG.....Agricultural
ANSI.....American National Standards Institute
AR.....As Required
ASSY..... Assembly
AUS.....Australia
AUX.....Auxiliary
AWG.....American Wire Gauge
B/M.....Bill of Material
CAC.....Charge Air Cooler
CE.....European Conformity
CCW.....Counter Clockwise
CM.....Centimeter
CW.....Clockwise
CSA.....Canadian Standards Association
CYL.....Cylinder
DIA.....Diameter
DC.....Direct Current
DEF.....Diesel Exhaust Fliud
EMS..... Emergency Stop
ENG.....Engine
FT(ft) .....Feet
GA(Ga).....Gauge
HRC.....High Rated Countries
HVAC.....Heating, Ventilating, and Air Conditioning
HYD.....Hydraulic
Hz.....Hertz
ID.....Inside Diameter
IN.....inches
ISO.....International Organization for Standards
JIC.....Joint Industry Council
KG.....Kilogram
L.....Liter
LB(LBS).....Pounds
LCD..... Liquid Crystal Display
LED..... .Light Emitting Diodes
LH.....Left Hand
LRC.....Low Rated Countries
LSS.....Load Sensing System
M(m).....Metric/Meter
MM(mm).....Milimeter
mA.....Miliamps
NLA.....No Longer Available
NPT..... National Pipe Threads
NSS.....Not Sold Separately
OD.....Outside Diameter
ORB..... O-Ring Boss
ORFS.....O-Ring Face Seal
OZ (oz).....Ounces
PG.....Page
PN.....Part Number
QT(qt.). .....Quarts
QTY.....Quantity
REF.....Reference
REV.....Revision Level
RH.....Right Hand
SAE.....Society of Automotive Engineers
SN..... ..Serial Number
SPEC(S).....Specifications
T/T.....Turntable
UGM.....Universal Ground Module
V.....Volts
W.....Watts
#.....Number

10) ILLUSTRATION REFERANCE LETTERS

When necessary, illustrations may contain reference letters that are intended to track information (i. e. hoses, harnesses) from one point to another or to track visual enlargement of components to show details that may be located in another area on the illustration.

Note: Due to continuous product improvements, JLG Industries, Inc. reserves the right to make specification changes without prior notification. Contact JLG Industries, Inc. for updated information.

TABLE OF CONTENTS

SECTION 1 - FRAME 19

FIGURE 1-1. AXLE INSTALLATION - FIXED 20
FIGURE 1-2. AXLE INSTALLATION - OSCILLATING 24
FIGURE 1-3. STEER INSTALLATION 28
FIGURE 1-4. WHEEL DRIVE INSTALLATION - REGGIANA RIDUTTORI 30
FIGURE 1-5. DRIVE HUB AND MOTOR ASSEMBLY - REGGIANA RIDUTTORI 32
FIGURE 1-6. DRIVE HUB ASSEMBLY - REGGIANA RIDUTTORI 34
FIGURE 1-7. DRIVE MOTOR ASSEMBLY 38
FIGURE 1-8. WHEEL DRIVE INSTALLATION - PMP PUMP 40
FIGURE 1-9. DRIVE HUB AND MOTOR ASSEMBLY - PMP PUMP 42
FIGURE 1-10. DRIVE MOTOR ASSEMBLY - PMP PUMPS 44
FIGURE 1-11. TIRE AND WHEEL INSTALLATION - FOAM FILLED 46
FIGURE 1-12. TIRE AND WHEEL INSTALLATION - FOAM FILLED NON MARKING 48
FIGURE 1-13. TIRE AND WHEEL INSTALLATION - SOLID 50
FIGURE 1-14. TIRE AND WHEEL INSTALLATION - SOLID NON MARKIMG 52
FIGURE 1-15. FRAME VALVES INSTALLATION 54
FIGURE 1-16. STEER VALVE ASSEMBLY 56
FIGURE 1-17. TRACTION VALVE ASSEMBLY 58
FIGURE 1-18. FRAME COVERS INSTALLATION - ABS 60
FIGURE 1-19. FRAME COVERS INSTALLATION - STEEL 62

SECTION 2 - TURNTABLE 65

FIGURE 2-1. TURNTABLE VALVES INSTALLATION 66
FIGURE 2-2. BATTERY AND AUXILIARY PUMP INSTALLATION - ABS HOODS 68
FIGURE 2-3. BATTERY AND AUXILIARY PUMP INSTALLATION - STEEL HOODS 70
FIGURE 2-4. AUXILIARY PUMP ASSEMBLY 72
FIGURE 2-5. MAIN VALVE ASSEMBLY 74
FIGURE 2-6. SWING DRIVE INSTALLATION 78
FIGURE 2-7. TURNTABLE BEARING AND LUBE INSTALLATION 80
FIGURE 2-8. TURNTABLE LOCK INSTALLATION 82
FIGURE 2-9. PINION SHIELD INSTALLATION 84
FIGURE 2-10. EXTREME HOSTILE PACKAGE INSTALLATION (OPTIONAL) 86
FIGURE 2-11. SWING MOTOR/HUB ASSEMBLY 88
FIGURE 2-12. ROTARY COUPLING AND COLLECTOR RING INSTALLATION (ROTARY COUPLING WITH SN PLATE) 92
FIGURE 2-13. ROTARY COUPLING AND COLLECTOR RING ASSEMBLY 94
FIGURE 2-14. ROTARY COUPLING AND COLLECTOR RING INSTALLATION (MACHINES WITH SN STARTING WITH B3) 96
FIGURE 2-15. ROTARY COUPLING AND COLLECTOR RING ASSEMBLY (MACHINES WITH SN STARTING WITH B3) 98
FIGURE 2-16. TANK INSTALLATION - WITH ABS HOODS 100
FIGURE 2-17. TANK INSTALLATION - WITH STEEL HOODS 102
FIGURE 2-18. TANK INSTALLATION - WITH STEEL HOODS AND 52.8 GAL/200 L FUEL TANK 104
FIGURE 2-19. TANK INSTALLATION - WITH ABS HOOS (CE & UK CA SPEC) (MACHINES WITH SN STARTING WITH B3) 106
FIGURE 2-20. TANK INSTALLATION - WITH STEEL HOOS (MACHINES WITH SN STARTING WITH B3) 108
FIGURE 2-21. TANK INSTALLATION - WITH STEEL HOOS AND 200L TANK (MACHINES WITH SN STARTING WITH B3) 110
FIGURE 2-22. HYDRAULIC OIL TANK ASSEMBLY 112

TABLE OF CONTENTS

FIGURE 2-23. HYDRAULIC OIL TANK ASSEMBLY (MACHINES WITH SN STARTING WITH B3) 114
FIGURE 2-24. HYDRAULIC OIL COOLER INSTALLATION - DEUTZ TD2011 ENGINES WITH REXROTH PUMPS (OPTIONAL) 116
FIGURE 2-25. HYDRAULIC OIL COOLER INSTALLATION - DEUTZ TD2011 ENGINES WITH SAUER PUMPS (OPTIONAL) 118
FIGURE 2-26. HYDRAULIC OIL COOLER INSTALLATION - DEUTZ TCD2.9L4 ENGINES AND DEUTZ TCD2.9L4 (STAGE V) ENGINES WITH REXROTH PUMPS (OPTIONAL) 120
FIGURE 2-27. HYDRAULIC OIL COOLER INSTALLATION - DEUTZ TCD2.9L4 ENGINES WITH REXROTH PUMPS (OPTIONAL) (CHINA SPEC ONLY)....122
FIGURE 2-28. HYDRAULIC OIL COOLER INSTALLATION - DEUTZ TCD2.9L4 ENGINES AND DEUTZ TCD2.9L4 (STAGE V & CHINA IV) ENGINES WITH SAUER PUMPS (OPTIONAL)....124
FIGURE 2-29. HYDRAULIC OIL COOLER INSTALLATION - DEUTZ TCD2.9L4 ENGINES WITH SAUER PUMPS (OPTIONAL) (CHINA SPEC ONLY) 126
FIGURE 2-30. HYDRAULIC OIL COOLER INSTALLATION - DEUTZ TCD2.9L4 ENGINES AND DEUTZ TCD2.9L4 (STAGE V) ENGINES WITH PMP PUMPS (OPTIONAL) 128
FIGURE 2-31. HYDRAULIC OIL COOLER INSTALLATION - DEUTZ TD2011 ENGINES WITH PMP PUMPS (OPTIONAL)....130
FIGURE 2-32. GROUND CONTROL BOX INSTALLATION - DEUTZ TD2011 ENGINES WITH REXROTH PUMPS (CE & UK CA SPECS)....132
FIGURE 2-33. GROUND CONTROL BOX INSTALLATION - DEUTZ TD2011 ENGINES WITH SAUER PUMPS (CE & UK CA SPECS)....134
FIGURE 2-34. GROUND CONTROL BOX INSTALLATION - DEUTZ TCD2.9L4 ENGINES (ANSI, ANSI EXPORT, CSA, CHINA AND JAPANESE SPECS)....136
FIGURE 2-35. GROUND CONTROL BOX INSTALLATION - DEUTZ TD2.9L4 ENGINES WITH REXROTH PUMPS (ANSI EXPORT AND AUSTRALIAN SPECS) 138
FIGURE 2-36. GROUND CONTROL BOX INSTALLATION - DEUTZ TD2.9L4 ENGINES WITH SAUER PUMPS (ANSI EXPORT AND AUSTRALIAN SPECS)....140
FIGURE 2-37. GROUND CONTROL BOX INSTALLATION - DEUTZ TCD2.9L4 ENGINES (STAGE V) 142
FIGURE 2-38. GROUND CONTROL BOX INSTALLATION - DEUTZ TCD2.9L4 ENGINES (CHINA IV) 144
FIGURE 2-39. GROUND CONTROL BOX INSTALLATION - DEUTZ TCD2.9L4 ENGINES (LRC) 146
FIGURE 2-40. GROUND CONTROL BOX ASSEMBLY - DEUTZ TCD2.9L4 ENGINES - WITH MECHANICAL HOUR METER 148
FIGURE 2-41. GROUND CONTROL BOX ASSEMBLY - DEUTZ TD2011 ENGINES....152
FIGURE 2-42. GROUND CONTROL BOX ASSEMBLY - DEUTZ TCD2.9L4 STAGE V ENGINES....156
FIGURE 2-43. GROUND CONTROL BOX ASSEMBLY - DEUTZ TCD2.9L4 CHINA IV ENGINES....160
FIGURE 2-44. GROUND CONTROL BOX ASSEMBLY - DEUTZ TCD2.9L4 ENGINES (LRC) 164
FIGURE 2-45. GROUND CONTROL PANEL ASSEMBLY 168
FIGURE 2-46. KEYSWITCH INSTALLATION....170
FIGURE 2-47. LIGHT PANEL INSTALLATION (MACHINES WITH SN STARTING WITH 03) 172
FIGURE 2-48. LIGHT PANEL INSTALLATION (MACHINES WITH SN STARTING WITH B3) 174
FIGURE 2-49. ALARM INSTALLATION....176
FIGURE 2-50. ALARM AMBIENT (WHITE NOISE) INSTALLATION (ALARM WITH HORIZONTAL BAR GRILLE) 178
FIGURE 2-51. ALARM AMBIENT (WHITE NOISE) INSTALLATION (ALARM WITH CROSS HATCH GRILLE) 180
FIGURE 2-52. STROBE LIGHT INSTALLATION (AMBER)....182
FIGURE 2-53. STROBE LIGHT INSTALLATION (BLUE) 184
FIGURE 2-54. STROBE LIGHT INSTALLATION (RED)....186
FIGURE 2-55. ENGINE TRAY JACK INSTALLATION - DEUTZ TD2011 ENGINES....188
FIGURE 2-56. ENGINE TRAY JACK INSTALLATION - DEUTZ TD2.9L4/TCD2.9L4 ENGINES AND DEUTZ TCD2.9L4 (STAGE V) ENGINES 190
FIGURE 2-57. HOOD INSTALLATIONS - DEUTZ TD2011 ENGINES (ABS)....192
FIGURE 2-58. HOOD INSTALLATION - DEUTZ TCD2.9L4 ENGINES (ABS) 196
FIGURE 2-59. HOOD INSTALLATION - DEUTZ TD2011/TD2.9L4/TCD2.9L ENGINES (STEEL)....202

FIGURE 2-60. HOOD INSTALLATION - DEUTZ TCD2.9L (CHINA IV) ENGINES (STEEL) 206
FIGURE 2-61. HOOD INSTALLATION - DEUTZ TCD2.9L4 ENGINES (STEEL) 210
FIGURE 2-62. HOOD KIT DEUTZ TCD2.9L4 (CHINA IV) ENGINE 214

SECTION 3 - ENGINE 217

FIGURE 3-1. DEUTZ TD2011 ENGINE INSTALLATION - WITH REXROTH PUMPS AND ABS HOODS (WITHOUT SKYPOWER AND WITHOUT COLD WEATHER PLUS PACKAGE) 218
FIGURE 3-2. DEUTZ TD2011 ENGINE INSTALLATION - WITH REXROTH PUMPS AND ABS HOODS (WITH SKYPOWER AND WITHOUT COLD WEATHER PLUS PACKAGE) 222
FIGURE 3-3. DEUTZ TD2011 ENGINE INSTALLATION - WITH REXROTH PUMPS AND STEEL HOOD (WITHOUT SKYPOWER AND WITHOUT COLD WEATHER PLUS PACKAGE) 226
FIGURE 3-4. DEUTZ TD2011 ENGINE INSTALLATION - WITH REXROTH PUMPS AND STEEL HOODS (WITH SKYPOWER AND WITHOUT COLD WEATHER PLUS PACKAGE) 230
FIGURE 3-5. DEUTZ TD2011 ENGINE INSTALLATION - WITH REXROTH PUMPS AND STEEL HOODS (WITH SKYPOWER AND WITH COLD WEATHER PLUS PACKAGE) 234
FIGURE 3-6. DEUTZ TD2011 ENGINE INSTALLATION - WITH SAUER PUMPS AND ABS HOODS (WITHOUT SKYPOWER AND WITHOUT COLD WEATHER PLUS PACKAGE) 238
FIGURE 3-7. DEUTZ TD2011 ENGINE INSTALLATION - WITH SAUER PUMPS AND ABS HOODS (WITH SKYPOWER AND WITHOUT COLD WEATHER PLUS PACKAGE) 242
FIGURE 3-8. DEUTZ TD2011 ENGINE INSTALLATION - WITH SAUER PUMPS AND STEEL HOODS (WITHOUT SKYPOWER AND WITHOUT COLD WEATHER PLUS PACKAGE) 246
FIGURE 3-9. DEUTZ TD2011 ENGINE INSTALLATION - WITH SAUER PUMPS AND STEEL HOODS (WITH SKYPOWER AND WITH COLD WEATHER PLUS PACKAGE) 250
FIGURE 3-10. DEUTZ TD2011 ENGINE INSTALLATION - WITH SAUER PUMPS AND STEEL HOODS (WITH SKYPOWER AND WITHOUT COLD WEATHER PLUS PACKAGE) 254
FIGURE 3-11. DEUTZ TD2011 ENGINE ASSEMBLY - WITH REXROTH PUMPS (WITHOUT SKYPOWER AND WITHOUT COLD WEATHER PLUS PACKAGE) 258
FIGURE 3-12. DEUTZ TD2011 ENGINE ASSEMBLY - WITH REXROTH PUMPS (WITH SKYPOWER AND WITHOUT COLD WEATHER PLUS PACKAGE) 262
FIGURE 3-13. DEUTZ TD2011 ENGINE ASSEMBLY - WITH REXROTH PUMPS (WTH SKYPOWER AND WITH COLD WEATHER PLUS PACKAGE) 266
FIGURE 3-14. DEUTZ TD2011 ENGINE ASSEMBLY - WITH SAUER PUMPS (WITHOUT SKYPOWER AND WITHOUT COLD WEATHER PLUS PACKAGE) 270
FIGURE 3-15. DEUTZ TD2011 ENGINE ASSEMBLY - WITH SAUER PUMPS (WITH SKYPOWER AND WITHOUT COLD WEATHER PLUS PACKAGE) 274
FIGURE 3-16. DEUTZ TD2011 ENGINE ASSEMBLY - WITH SAUER PUMPS (WITH SKYPOWER AND WITH COLD WEATHER PLUS PACKAGE) 278
FIGURE 3-17. DEUTZ TD2011 ENGINE COMPONENTS 282
FIGURE 3-18. DEUTZ TD2.9L4 ENGINE INSTALLATION - WITH SAUER PUMPS AND STEEL HOODS (CHINA & ANSI EXPORT LRC SPECS) 286
FIGURE 3-19. DEUTZ TD2.9L4 ENGINE SUB-ASSEMBLY - WITH SAUER PUMPS (CHINA & ANSI EXPORT LRC SPECS) 290
FIGURE 3-20. DEUTZ TD2.9L4 ENGINE ASSEMBLY (CHINA & ANSI EXPORT LRC SPECS) 292
FIGURE 3-21. DEUTZ TD2.9L4 ENGINE COMPONENTS (CHINA & ANSI EXPORT LRC SPECS) 298
FIGURE 3-22. DEUTZ TCD2.9L4 (EMR4) ENGINE INSTALLATION - WITH REXROTH PUMPS AND ABS HOODS (WITHOUT COLD WEATHER PLUS PACKAGE) 302
FIGURE 3-23. DEUTZ TCD2.9L4 (EMR4) ENGINE INSTALLATION - WITH REXROTH PUMPS AND STEEL HOODS (WITHOUT COLD WEATHER PLUS PACKAGE) 306
FIGURE 3-24. DEUTZ TCD2.9L4 (EMR4) ENGINE INSTALLATION - WITH REXROTH PUMPS AND STEEL HOODS (WITH COLD WEATHER PLUS PACKAGE) 310
FIGURE 3-25. DEUTZ TCD2.9L4 (EMR4) ENGINE INSTALLATION - WITH SAUER PUMPS AND ABS HOODS (WITHOUT COLD WEATHER PLUS PACKAGE) 314
FIGURE 3-26. DEUTZ TCD2.9L4 (EMR4) ENGINE INSTALLATION - WITH SAUER PUMPS AND STEEL HOODS (WITHOUT COLD WEATHER PLUS PACKAGE) 318

TABLE OF CONTENTS

FIGURE 3-27. DEUTZ TCD2.9L4 (EMR4) ENGINE INSTALLATION - WITH SAUER PUMPS AND STEEL HOODS (WITH COLD WEATHER PLUS PACKAGE) 322

FIGURE 3-28. DEUTZ TCD2.9L4 (EMR4) ENGINE INSTALLATION - WITH PMP PUMP AND ABS HOODS (WITHOUT COLD WEATHER PLUS PACKAGE) 326

FIGURE 3-29. DEUTZ D2.9L4 - (EMR4) ENGINE INSTALLATION WITH PMP PUMP AND STEEL HOODS (WITHOUT COLD WEATHER PLUS PACKAGE) 330

FIGURE 3-30. DEUTZ TCD2.9L4 (EMR4) ENGINE SUB-ASSEMBLY - WITH REXROTH PUMP (WITHOUT COLD WEATHER PLUS PACKAGE) 334

FIGURE 3-31. DEUTZ TCD2.9L4 (EMR4) ENGINE SUB-ASSEMBLY - WITH REXROTH PUMP (WITH COLD WEATHER PLUS PACKAGE)....336

FIGURE 3-32. DEUTZ TCD2.9L4 (EMR4) ENGINE SUB-ASSEMBLY - WITH SAUER PUMP (WITHOUT COLD WEATHER PLUS PACKAGE) 338

FIGURE 3-33. DEUTZ TCD2.9L4 (EMR4) ENGINE SUB-ASSEMBLY - WITH SAUER PUMPS (WITH COLD WEATHER PLUS PACKAGE)....340

FIGURE 3-34. DEUTZ D2.9L4 (EMR4) ENGINE SUB-ASSEMBLY WITH PMP PUMP AND ABS HOODS (WITHOUT COLD WEATHER PLUS PACKAGE) 342

FIGURE 3-35. DEUTZ D2.9L4 (EMR4) ENGINE SUB-ASSEMBLY WITH PMP PUMP AND STEEL HOODS (WITH COLD WEATHER PLUS PACKAGE) 344

FIGURE 3-36. DEUTZ TCD2.9L4 (EMR4) ENGINE ASSEMBLY (WITHOUT COLD WEATHER PLUS PACKAGE)....346

FIGURE 3-37. DEUTZ TCD2.9L4 (EMR4) ENGINE ASSEMBLY (WITH COLD WEATHER PLUS PACKAGE) 352

FIGURE 3-38. DEUTZ TCD2.9L4 (EMR4) ENGINE COMPONENTS....358

FIGURE 3-39. DEUTZ D2.9L4 - EMR5 ENGINE INSTALLATION WITH PMP PUMP AND STEEL HOODS (WITH COLD WEATHER PLUS PACKAGE) 362

FIGURE 3-40. DEUTZ D2.9L4 - EMR5 ENGINE INSTALLATION WITH PMP PUMPS AND STEEL HOODS (WITH COLD WEATHER PLUS PACKAGE) 366

FIGURE 3-41. DEUTZ D2.9L4 - EMR5 ENGINE INSTALLATION WITH PMP PUMPS AND ABS HOODS (WITHOUT COLD WEATHER PLUS PACKAGE) 370

FIGURE 3-42. DEUTZ D2.9L4 - EMR5 ENGINE INSTALLATION WITH PMP PUMPS AND STEEL HOODS (WITHOUT COLD WEATHER PLUS PACKAGE) 374

FIGURE 3-43. DEUTZ D2.9L4 - EMR5 ENGINE INSTALLATION WITH REXROTH PUMPS AND STEEL HOODS (WITH COLD WEATHER PLUS PACKAGE) 378

FIGURE 3-44. DEUTZ D2.9L4 - EMR5 ENGINE INSTALLATION WITH REXROTH PUMPS AND ABS HOODS (WITHOUT COLD WEATHER PLUS PACKAGE) 382

FIGURE 3-45. DEUTZ D2.9L4 - EMR5 ENGINE INSTALLATION WITH REXROTH PUMPS AND STEEL HOODS (WITHOUT COLD WEATHER PLUS PACKAGE)....386

FIGURE 3-46. DEUTZ D2.9L4 - EMR5 ENGINE INSTALLATION WITH SAUER PUMPS AND STEEL HOODS (WITH COLD WEATHER PLUS PACKAGE) 390

FIGURE 3-47. DEUTZ D2.9L4 - EMR5 ENGINE INSTALLATION WITH SAUER PUMPS AND STEEL HOODS (WITHOUT COLD WEATHER PLUS PACKAGE) 394

FIGURE 3-48. DEUTZ D2.9L4 - EMR5 ENGINE INSTALLATION WITH SAUER PUMPS AND ABS HOODS (WITHOUT COLD WEATHER PLUS PACKAGE) 398

FIGURE 3-49. DEUTZ D2.9L4 - EMR5 ENGINE SUB-ASSEMBLY WITH PMP PUMPS (WITH COLD WEATHER PLUS PACKAGE)....402

FIGURE 3-50. DEUTZ D2.9L4 - EMR5 ENGINE SUB-ASSEMBLY WITH PMP PUMPS (WITHOUT COLD WEATHER PLUS PACKAGE)....404

FIGURE 3-51. DEUTZ D2.9L4 - EMR5 ENGINE SUB-ASSEMBLY WITH REXROTH PUMPS (WITH COLD WEATHER PLUS PACKAGE)....406

FIGURE 3-52. DEUTZ D2.9L4 - EMR5 ENGINE SUB-ASSEMBLY WITH REXROTH PUMPS (WITHOUT COLD WEATHER PLUS PACKAGE) 408

FIGURE 3-53. DEUTZ D2.9L4 - EMR5 ENGINE SUB-ASSEMBLY WITH SAUER PUMPS (WITH COLD WEATHER PLUS PACKAGE)....410

FIGURE 3-54. DEUTZ D2.9L4 - EMR5 ENGINE SUB-ASSEMBLY WITH SAUER PUMPS (WITHOUT COLD WEATHER PLUS PACKAGE)....412

FIGURE 3-55. DEUTZ D2.9L4 - EMR5 ENGINE ASSEMBLY (WITH COLD WEATHER PLUS PACKAGE) 414
FIGURE 3-56. DEUTZ D2.9L4 - EMR5 ENGINE ASSEMBLY (WITHOUT COLD WEATHER PLUS PACKAGE) 420
FIGURE 3-57. ENGINE COMPONENTS - DEUTZ TCD2.9L4 EMR5 ENGINE 426
FIGURE 3-58. DEUTZ TD2.9L4 ENGINE (R96) INSTALLATION- WITH REXROTH PUMPS WITH STEELS HOODS (WITHOUT COLD WEATHER PLUS PACKAGE) 430
FIGURE 3-59. DEUTZ TD2.9L4 ENGINE (R96) INSTALLATION - WITH REXROTH PUMPS AND ABS HOODS (WITHOUT COLD WEATHER PLUS PACKAGE) 434
FIGURE 3-60. DEUTZ TD2.9L4 ENGINE (R96) SUB-ASSEMBLY - WITH REXROTH PUMPS WITH STEELS HOODS (WITHOUT COLD WEATHER PLUS PACKAGE) 438
FIGURE 3-61. DEUTZ TD2.9L4 ENGINE (R96) INSTALLATION - WITH SAUER PUMPS AND ABS HOODS (WITHOUT COLD WEATHER PLUS PACKAGE) 440
FIGURE 3-62. DEUTZ TD2.9L4 ENGINE (R96) INSTALLATION- WITH SAUER PUMPS WITH STEELS HOODS (WITHOUT COLD WEATHER PLUS PACKAGE) 444
FIGURE 3-63. DEUTZ TD2.9L4 ENGINE (R96) SUB-ASSEMBLY - WITH SAUER PUMPS WITH ABS HOODS (WITHOUT COLD WEATHER PLUS PACKAGE) 448
FIGURE 3-64. DEUTZ TD2.9L4 ENGINE (R96) ASSEMBLY - (WITHOUT COLD WEATHER PLUS PACKAGE) 450
FIGURE 3-65. DEUTZ TD2.9L4 ENGINE (R96) INSTALLATION- WITH REXROTH PUMPS WITH STEELS HOODS (WITH COLD WEATHER PLUS PACKAGE) 456
FIGURE 3-66. DEUTZ TD2.9L4 ENGINE (R96) SUB-ASSEMBLY - WITH REXROTH PUMPS WITH STEELS HOODS (WITH COLD WEATHER PLUS PACKAGE) 460
FIGURE 3-67. DEUTZ TD2.9L4 ENGINE (R96) INSTALLATION- WITH SAUER PUMPS WITH STEELS HOODS (WITH COLD WEATHER PLUS PACKAGE) 462
FIGURE 3-68. DEUTZ TD2.9L4 ENGINE (R96) SUB-ASSEMBLY - WITH SAUER PUMPS WITH STEELS HOODS (WITH COLD WEATHER PLUS PACKAGE) 466
FIGURE 3-69. DEUTZ TD2.9L4 ENGINE (R96) ASSEMBLY - (WITH COLD WEATHER PLUS PACKAGE) 468
FIGURE 3-70. DEUTZ TCD2.9L4 (STAGE V) ENGINE INSTALLATION - WITH SAUER PUMPS AND ABS HOODS (WITHOUT COLD WEATHER PLUS PACKAGE) 474
FIGURE 3-71. DEUTZ TCD2.9L4 (STAGE V) ENGINE INSTALLATION - WITH REXROTH PUMPS AND ABS HOODS (WITHOUT COLD WEATHER PLUS PACKAGE) 478
FIGURE 3-72. DEUTZ TCD2.9L4 (STAGE V) ENGINE INSTALLATION - WITH PMP PUMP AND ABS HOODS (WITHOUT COLD WEATHER PLUS PACKAGE) 482
FIGURE 3-73. DEUTZ TCD2.9L4 (STAGE V) ENGINE SUB-ASSEMBLY - WITH SAUER PUMP AND ABS HOODS (WITHOUT COLD WEATHER PLUS PACKAGE) 486
FIGURE 3-74. DEUTZ TCD2.9L4 (STAGE V) ENGINE SUB-ASSEMBLY - WITH REXROTH PUMP AND ABS HOODS (WITHOUT COLD WEATHER PLUS PACKAGE) 488
FIGURE 3-75. DEUTZ D2.9L4 (STAGE V) ENGINE SUB-ASSEMBLY WITH PMP PUMP AND ABS HOODS (WITHOUT COLD WEATHER PLUS PACKAGE) 490
FIGURE 3-76. DEUTZ TCD2.9L4 (STAGE V) ENGINE ASSEMBLY (WITHOUT COLD WEATHER PLUS PACKAGE) 492
FIGURE 3-77. DEUTZ TCD2.9L4 (STAGE V) ENGINE COMPONENTS 498
FIGURE 3-78. DEUTZ TCD2.9L4 (CHINA IV) ENGINE INSTALLATION - WITH SAUER PUMPS 500
FIGURE 3-79. DEUTZ TCD2.9L4 (CHINA IV) ENGINE INSTALLATION - WITH PMP PUMPS 504
FIGURE 3-80. DEUTZ TCD2.9L4 (CHINA IV) SUB - ASSEMBLY - WITH SAUER PUMPS 508
FIGURE 3-81. DEUTZ TCD2.9L4 (CHINA IV) ENGINE AND PUMP SUB-ASSEMBLY (WITH PMP PUMPS) 510
FIGURE 3-82. ENGINE ASSEMBLY - DEUTZ TCD2.9L4 (CHINA IV) 512
FIGURE 3-83. DEUTZ TCD2.9L4 (CHINA IV) ENGINE COMPONENTS 518
FIGURE 3-84. PUMP ASSEMBLY (REXROTH) (DEUTZ TD2011 ENGINES) 522
FIGURE 3-85. PUMP ASSEMBLY (REXROTH) (DEUTZ TCD2.9L4 ENGINES) 528
FIGURE 3-86. PUMP ASSEMBLY (SAUER TANDEM) 534
FIGURE 3-87. PUMP ASSEMBLY (SAUER PISTON) 538
FIGURE 3-88. PUMP ASSEMBLY (SAUER GEAR) 542
FIGURE 3-89. PUMP ASSEMBLY - HYDRAULIC TANDEM 544

TABLE OF CONTENTS

FIGURE 3-90. PUMP ASSEMBLY - HYDRAULIC PISTON....546
FIGURE 3-91. PUMP COUPLING KIT....548
FIGURE 3-92. WATER/FUEL SEPARATOR INSTALLATION - DEUTZ TD2011 ENGINE....550
FIGURE 3-93. FUEL PUMP/FILTER BRACKET ASSEMBLY - DEUTZ TCD2.9L4 ENGINE AND DEUTZ TCD2.9L4 (STAGE V) ENGINE....552
FIGURE 3-94. FUEL PUMP/FILTER BRACKET ASSEMBLY - DEUTZ TD2.9L4 ENGINE (CHINA SPECS ONLY)....554
FIGURE 3-95. FUEL FILTER/WATER SEPARATOR INSTALLATION - DEUTZ TD2.9L4 & TCD2.9L ENGINES....556
FIGURE 3-96. QUICKFIT OIL VALVE....558
FIGURE 3-97. SPARK ARRESTING CATALYTIC MUFFLER - DEUTZ TD2011 ENGINES (OPTIONAL)....560
FIGURE 3-98. SPARK ARRESTOR INSTALLATION....562
FIGURE 3-99. 2500W GENERATOR INSTALLATION - 60HZ SPEC (DEUTZ TD2011 ENGINES) (OPTIONAL)....564
FIGURE 3-100. 2500W GENERATOR INSTALLATION - 50HZ SPEC (DEUTZ TD2011 ENGINES) (OPTIONAL)....568
FIGURE 3-101. 4000W GENERATOR INSTALLATION - 60HZ SPEC (DEUTZ TD2011 ENGINES) (OPTIONAL)....572
FIGURE 3-102. 4000W GENERATOR INSTALLATION - 50HZ SPEC (DEUTZ TD2011 ENGINES) (OPTIONAL)....576
FIGURE 3-103. 4000W GENERATOR INSTALLATION - 60HZ SPEC (DEUTZ TCD2.9L4 ENGINES) (OPTIONAL)....580
FIGURE 3-104. 4000W GENERATOR INSTALLATION - 50HZ SPEC (DEUTZ TCD2.9L4 ENGINES AND DEUTZ TCD2.9L4 (STAGE V) ENGINES) (OPTIONAL)....584
FIGURE 3-105. 7500W SKYPOWER GENERATOR INSTALLATION - 60HZ SPEC (DEUTZ TD2011 ENGINES) (OPTIONAL)588
FIGURE 3-106. 7500W SKYPOWER GENERATOR INSTALLATION - 50HZ SPEC (DEUTZ TD2011 ENGINES) (OPTIONAL)592
FIGURE 3-107. 7500W SKYPOWER GENERATOR INSTALLATION - 60HZ SPEC (DEUTZ TCD2.9L4 ENGINES) (OPTIONAL)....596
FIGURE 3-108. 7500W SKYPOWER GENERATOR INSTALLATION - 50HZ SPEC (DEUTZ TCD2.9L4 ENGINES) (OPTIONAL)....600

SECTION 4 - BOOM....603

FIGURE 4-1. BOOM INSTALLATION - WITHOUT COLD WEATHER PLUS PACKAGE (1200SJP)....604
FIGURE 4-2. BOOM INSTALLATION - WITH COLD WEATHER PLUS PACKAGE (1200SJP)....606
FIGURE 4-3. BOOM INSTALLATION - WITHOUT COLD WEATHER PLUS PACKAGE (1350SJP)....608
FIGURE 4-4. BOOM INSTALLATION - WITH COLD WEATHER PLUS PACKAGE (1350SJP)....610
FIGURE 4-5. BOOM ASSEMBLY - WITHOUT COLD WEATHER PLUS PACKAGE (1200SJP)....612
FIGURE 4-6. BOOM ASSEMBLY - WITH COLD WEATHER PLUS PACKAGE (1200SJP)....620
FIGURE 4-7. BOOM ASSEMBLY - WITHOUT COLD WEATHER PLUS PACKAGE (1350SJP)....628
FIGURE 4-8. BOOM ASSEMBLY - WITH COLD WEATHER PLUS PACKAGE (1350SJP)....636
FIGURE 4-9. WIRE ROPE TOOLS INSTALLATION (OPTIONAL)....644
FIGURE 4-10. PLATFORM ROTATOR ASSEMBLY....646
FIGURE 4-11. JIB ROTATE ASSEMBLY....648
FIGURE 4-12. POWER TRACK INSTALLATION (1200SJP)....650
FIGURE 4-13. POWER TRACK INSTALLATION (1350SJP)....654
FIGURE 4-14. BOOM SENSORS AND SWITCHES INSTALLATION....658
FIGURE 4-15. PLATFORM SUPPORT INSTALLATION....662
FIGURE 4-16. CONTROL VALVE INSTALLATION....664
FIGURE 4-17. CONTROL VALVE ASSEMBLY....666

SECTION 5 - PLATFORM....669

FIGURE 5-1. PLATFORM ASSEMBLY - 36IN X 6FT (91.5CM X 1.83M) WITH SWING GATE....670
FIGURE 5-2. PLATFORM ASSEMBLY - 36IN X 8FT (91.5CM X 2.44M) WITH SWING GATE....672
FIGURE 5-3. PLATFORM ASSEMBLY - 30IN X 3FT (76CM X .91M) - WITH DROP BAR....674

FIGURE 5-4. PLATFORM ASSEMBLY - 30IN X 4FT (76.2CM X 1.22M) WITH DROP BAR 676
FIGURE 5-5. PLATFORM ASSEMBLY - 36IN X 6FT (91.5CM X 1.83M) WITH DROP BAR 678
FIGURE 5-6. PLATFORM ASSEMBLY - 36IN X 8FT (91.5CM X 2.44M) WITH DROP BAR 680
FIGURE 5-7. PLATFORM ASSEMBLY - 36IN X 6FT (91.5CM X 1.83M) WITH FALL ARREST (ANSI, ANSI EXPORT AND CHINA SPECS) 682
FIGURE 5-8. PLATFORM ASSEMBLY - 36IN X 8FT (91.5CM X 2.44M) WITH FALL ARREST (ANSI SPEC) 684
FIGURE 5-9. PLATFORM ASSEMBLY - 36IN X 8FT (91.5CM X 2.44M) WITH FALL ARREST (AUSTRALIAN SPECS) 686
FIGURE 5-10. PLATFORM ASSEMBLY - 36IN X 6FT (91.5CM X 1.83M) TRI-ENTRY WITH SWING GATE 688
FIGURE 5-11. PLATFORM ASSEMBLY - 36IN X 6FT (91.5CM X 1.83M) TRI-ENTRY WITH DROPBAR 690
FIGURE 5-12. PLATFORM ASSEMBLY - 36IN X 8FT (91.5CM X 2.44M) WITH TRI-ENTRY (1 GATE/2 DROP BARS) 692
FIGURE 5-13. PLATFORM ASSEMBLY - 36IN X 8FT (91.5CM X 2.44M) WITH TRI-ENTRY (3 DROP BARS) 694
FIGURE 5-14. PLATFORM CONTROLS INSTALLATION 696
FIGURE 5-15. PLATFORM CONSOLE ASSEMBLEY 698
FIGURE 5-16. BOOM CONTROL SELECT SWITCH INSTALLATION 702
FIGURE 5-17. FALL ARREST INSTALLATION (BOLT - ON EXTERNAL) 4FFT/1.22M PLATFORM) 704
FIGURE 5-18. FALL ARREST INSTALLATION (BOLT - ON EXTERNAL) 6FT/1.82M PLATFORM 706
FIGURE 5-19. FALL ARREST INSTALLATION (BOLT - ON EXTERNAL) 6FT/1.82M PLATFORM (..... 708
FIGURE 5-20. FALL ARREST INSTALLATION (BOLT - ON EXTERNAL) 8FT/2.4M PLATFORM 710
FIGURE 5-21. FOOTSWITCH ASSEMBLY 712
FIGURE 5-22. LIGHT PANEL INSTALLATION (MACHINES WITH SN STARTING WITH 03) 714
FIGURE 5-23. LIGHT PANEL INSTALLATION (MACHINES WITH SN STARTING WITH B3) 716
FIGURE 5-24. PLASMA CUTTER ASSEMBLY 718
FIGURE 5-25. SKYCUTTER INSTALLATION (ANSI, ANSI EXPORT, CHINA, CSA AND JAPANESE SPECS) 720
FIGURE 5-26. SKYEYE INSTALLATION 722
FIGURE 5-27. SKYGLAZIER INSTALLATION (ANSI AND CSA SPECS) 724
FIGURE 5-28. SKYGLAZIER INSTALLATION (BRAZIL SPECS) 726
FIGURE 5-29. SKYGLAZIER INSTALLATION (DANISH SPECS) 728
FIGURE 5-30. SKYGLAZIER INSTALLATION (FINNISH SPECS) 730
FIGURE 5-31. SKYGLAZIER INSTALLATION (FRENCH SPECS) 732
FIGURE 5-32. SKYGLAZIER INSTALLATION (GERMAN SPECS) 734
FIGURE 5-33. SKYGLAZIER INSTALLATION (ITALIAN SPECS) 736
FIGURE 5-34. SKYGLAZIER INSTALLATION (LATIN AMERICAN SPECS) 738
FIGURE 5-35. SKYGLAZIER INSTALLATION (PORTUGUESE SPECS) 740
FIGURE 5-36. SKYGLAZIER INSTALLATION (SPANISH SPECS) 742
FIGURE 5-37. SKYGLAZIER INSTALLATION (SWEDISH SPECS) 744
FIGURE 5-38. SKYGLAZIER INSTALLATION (UK SPECS) 746
FIGURE 5-39. SKYGUARD BAR INSTALLATION 748
FIGURE 5-40. SKYLINE INSTALLATION 750
FIGURE 5-41. SKYWELDER INSTALLATION (50HZ) (ANSI EXPORT, AUSTRALIAN, CHINA AND JAPANESE SPECS) 752
FIGURE 5-42. SKYWELDER INSTALLATION (60HZ) (ANSI, ANSI EXPORT, CSA AND JAPANESE SPECS) 754
FIGURE 5-43. SKYWELDER PREP PACKAGE (60HZ) (ANSI, ANSI EXPORT, CSA AND CHINA SPECS) 756
FIGURE 5-44. SKYWELDER/SKYCUTTER COMBO INSTALLATION (60HZ) (ANSI, ANSI EXPORT, CHINA, CSA AND JAPANESE SPECS) 758
FIGURE 5-45. SOFT TOUCH SYSTEM INSTALLATION - 6FT/1.8M PLATFORMS - (ALL SPECS) 762
FIGURE 5-46. SOFT TOUCH SYSTEM INSTALLATION - 8FT/2.4M PLATFORMS (ALL SPECS) (1350SJP) 764

TABLE OF CONTENTS

FIGURE 5-47. SOFT TOUCH SYSTEM INSTALLATION - 8FT/2.4M PLATFORMS (ANSI SPECS WITH SN STARTING WITH 03)) (1350SJP) 766
FIGURE 5-48. TRAY ASSEMBLY 768
FIGURE 5-49. USB CHARGER INSTALLATION 770
FIGURE 5-50. WELDER ASSEMBLY 772

SECTION 6 - CYLINDER 775

FIGURE 6-1. AXLE EXTENSION CYLINDER ASSEMBLY 776
FIGURE 6-2. AXLE LOCKOUT CYLINDER ASSEMBLY 778
FIGURE 6-3. PLATFORM LEVEL CYLINDER ASSEMBLY - WITHOUT COLD WEATHER PLUS PACKAGE 780
FIGURE 6-4. PLATFORM LEVEL CYLINDER ASSEMBLY - WITH COLD WEATHER PLUS PACKAGE 782
FIGURE 6-5. LIFT CYLINDER ASSEMBLY 784
FIGURE 6-6. JIB CYLINDER ASSEMBLY - WITH OR WITHOUT COLD WEATHER PLUS PACKAGE 786
FIGURE 6-7. STEER CYLINDER ASSEMBLY 788
FIGURE 6-8. TELESCOPE CYLINDER ASSEMBLY (1200SJP) 790
FIGURE 6-9. TELESCOPE CYLINDER ASSEMBLY (1350SJP) 792

SECTION 7 - HYDRAULIC 795

FIGURE 7-1. HYDRAULIC DIAGRAM - BOOM (1200SJP) 796
FIGURE 7-2. HYDRAULIC DIAGRAM - BOOM (1350SJP) 798
FIGURE 7-3. HYDRAULIC DIAGRAM - DRIVE 800
FIGURE 7-4. HYDRAULIC DIAGRAM - OSCILLATING AXLE 804
FIGURE 7-5. HYDRAULIC DIAGRAM - STEER 806
FIGURE 7-6. HYDRAULIC DIAGRAM - TURNTABLE (DEUTZ TD2011 ENGINES WITH REXROTH PUMPS) 808
FIGURE 7-7. HYDRAULIC DIAGRAM - TURNTABLE (DEUTZ TCD2.9L4 ENGINES AND DEUTZ TCD2.9L4 (STAGE V) ENGINES WITH REXROTH PUMPS) 812
FIGURE 7-8. HYDRAULIC DIAGRAM - TURNTABLE (WITH SAUER PUMPS) 816
FIGURE 7-9. HYDRAULIC DIAGRAM - TURNTABLE (WITH PMP PUMPS) 820

SECTION 8 - ELECTRICAL 823

FIGURE 8-1. AC BOX AT PLATFORM - 110V (ANSI SPECS) 824
FIGURE 8-2. AC BOX AT PLATFORM - 110V GFI RECEPTACLE (ANSI, CSA AND JAPANESE SPECS) 826
FIGURE 8-3. AC BOX AT PLATFORM - 220V GFI RECEPTACLE (ANSI, CSA AND JAPANESE SPECS) 828
FIGURE 8-4. AC BOX AT PLATFORM INSTALLATION - BOX WITH COVER (2X4 BOX) WITH 4000W GENERATOR (AUSTRALIAN SPECS) 830
FIGURE 8-5. AC BOX AT PLATFORM INSTALLATION - 110V IEC 60309 YELLOW WITHOUT 2500W GENERATOR (CE & UK CA SPECS) 832
FIGURE 8-6. AC BOX AT PLATFORM INSTALLATION - 110V IEC 60309 YELLOW WITHOUT 4000W GENERATOR (CE & UK CA SPECS) 834
FIGURE 8-7. AC BOX AT PLATFORM INSTALLATION - 220V IEC 60309 BLUE WITHOUT 2500W GENERATOR (CE & UK CA SPECS) 836
FIGURE 8-8. AC BOX AT PLATFORM INSTALLATION - 220V IEC 60309 BLUE WITHOUT 4000W GENERATOR (CE & UK CA SPECS) 838
FIGURE 8-9. AC BOX AT PLATFORM INSTALLATION - 220V CEE7 POST GROUND (2X4 BOX) WITHOUT 2500W GENERATOR (CE & UK CA SPECS) 840
FIGURE 8-10. AC BOX AT PLATFORM INSTALLATION - 220V CEE7 POST GROUND (2X4 BOX) WITHOUT 4000W GENERATOR (CE & UK CA SPECS) 842
FIGURE 8-11. AC BOX AT PLATFORM INSTALLATION - 220V CEE7 SIDE GROUND (2X4 BOX) WITHOUT 2500W GENERATOR (CE & UK CA SPECS) 844

FIGURE 8-12. AC BOX AT PLATFORM INSTALLATION - 220V CEE7 SIDE GROUND (2X4 BOX) WITHOUT 4000W GENERATOR (CE & UK CA SPECS) 846
FIGURE 8-13. AC BOX AT PLATFORM INSTALLATION - 220V AFSINT 107 KEYED GROUND (2X4 BOX) WITHOUT 2500W GENERATOR (CE & UK CA SPECS) 848
FIGURE 8-14. AC BOX AT PLATFORM INSTALLATION - 240V (WITH 4000W GENERATOR) (ANSI, ANSI EXPORT, CSA AND JAPANESE SPECS) 850
FIGURE 8-15. AC BOX AT PLATFORM INSTALLATION - 240V (WITH 7500W SKYPOWER GENERATOR) (ALL SPECS EXCEPT AUSTRALIAN & CE & UK CA SPECS) 852
FIGURE 8-16. AC BOX AT PLATFORM INSTALLATION - 220V AFSINT 107 KEYED GROUND (2X4 BOX) WITHOUT 4000W GENERATOR (CE & UK CA SPECS) 854
FIGURE 8-17. AC 16 AMP BREAKER BOX INSTALLATION (CE & UK CA SPECS) 856
FIGURE 8-18. ANALYZER CABLE HARNESS 858
FIGURE 8-19. AXLE POWER TRACK HARNESS ASSEMBLY 860
FIGURE 8-20. BATTERY DISCONNECT SWITCH 862
FIGURE 8-21. BEACON LIGHT HARNESS (BLUE BEACON LIGHT ONLY) 864
FIGURE 8-22. B.L.A.M. TO BOOM LENGTH SENSOR HARNESS 866
FIGURE 8-23. B.L.A.M. TO BOOM ANGLE SENSOR HARNESS (LEFT SIDE) 868
FIGURE 8-24. B.L.A.M. TO BOOM ANGLE SENSOR HARNESS (RIGHT SIDE) 870
FIGURE 8-25. B.L.A.M. HARNESS 872
FIGURE 8-26. BOOM CABLES INSTALLATION (ANSI, ANSI EXPORT, CHINA, CSA AND JAPANESE SPECS) (1200SJP) 874
FIGURE 8-27. BOOM CABLES INSTALLATION (ANSI, ANSI EXPORT, CHINA, CSA AND JAPANESE SPECS) (1350SJP) 876
FIGURE 8-28. BOOM CABLES INSTALLATION (AUSTRALIAN, CE & UK CA SPECS) (1200SJP) 878
FIGURE 8-29. BOOM CABLES INSTALLATION (AUSTRALIAN, CE & UK CA SPECS) (1350SJP) 880
FIGURE 8-30. BOOM CABLES INSTALLATION - WITH 4000W GENERATOR (1200SJP) 882
FIGURE 8-31. BOOM CABLES INSTALLATION - WITHOUT AC CABLE (CHINA SPEC) (MACHINES WITH SN STARTING WITH B3) (1350SJP) 884
FIGURE 8-32. BOOM CABLES INSTALLATION - WITHOUT AC CABLE (CHINA SPEC) (MACHINES WITH SN STARTING WITH B3) (1200SJP) 886
FIGURE 8-33. BOOM CABLES INSTALLATION - WITH 4000W GENERATOR (1350SJP) 888
FIGURE 8-34. BOOM CABLES INSTALLATION - WITH 7500W GENERATOR (1200SJP) 890
FIGURE 8-35. BOOM CABLES INSTALLATION - WITH 7500W GENERATOR (1350SJP) 892
FIGURE 8-36. BREAKER BOX KIT - 16 AMP (2500W GENERATOR) 894
FIGURE 8-37. BREAKER BOX KIT - 16 AMP (4000W GENERATOR) 896
FIGURE 8-38. CHASSIS HARNESS ASSEMBLY 898
FIGURE 8-39. CLEARSKY INSTALLATION - 3G CANBUS CONNECTION (ANSI EXPORT, CE, AND UK CA SPECS) 900
FIGURE 8-40. CLEARSKY INSTALLATION - 3G CANBUS CONNECTION (AUSTRALIAN SPECS) 902
FIGURE 8-41. CLEARSKY INSTALLATION - 4G CANBUS CONNECTION (ALL SPECS EXCEPT CHINA SPECS) 904
FIGURE 8-42. CLEARSKY INSTALLATION - 4G CANBUS CONNECTION (CHINA SPECS) 906
FIGURE 8-43. CLEARSKY INSTALLATION - 3 WIRE GT1030 (ALL SPECS EXCEPT CHINA SPECS) 908
FIGURE 8-44. CLEARSKY INSTALLATION - WITH DEUTZ TD2.9L4 (CHINA IV) ENGINES (CHINA SPECS) 910
FIGURE 8-45. CLEARSKY HARNESS - 3G & 4G CANBUS CONNECTIONS 912
FIGURE 8-46. CLEARSKY HARNESS - 3 WIRE GT1030 914
FIGURE 8-47. CLEARSKY HARNESS - WITH DEUTZ TD2.9L4 (CHINA IV) ENGINES 916
FIGURE 8-48. CLEARSKY TELEMATICS JUMPER HARNESS 918
FIGURE 8-49. TELEMATICS CONTROL MODULE ASSEMBLY 920
FIGURE 8-50. CLEARSKY READY HARNESS 922
FIGURE 8-51. DIAGNOSTIC HARNESS 924
FIGURE 8-52. DUAL CAPACITY JIB POSITION SWITCH HARNESS 926

TABLE OF CONTENTS

FIGURE 8-53. ENGINE HARNESS - DEUTZ TD2011 ENGINES AND DEUTZ TD2.9L4 ENGINES 928
FIGURE 8-54. ENGINE HARNESS - DEUTZ TD2.9L4 ENGINES AND DEUTZ TCD2.9L4 ENGINES 930
FIGURE 8-55. ENGINE HARNESS - DEUTZ TCD2.9L4 (STAGE V) & DEUTZ TCD2.9L4 (CHINA IV) ENGINES 934
FIGURE 8-56. FUEL FILTER HARNESS - DEUTZ TCD2.9L4 ENGINES AND DEUTZ TCD2.9L4 (STAGE V) ENGINES 938
FIGURE 8-57. FUEL HARNESS - DEUTZ TCD2.9L4 ENGINES AND DEUTZ TCD2.9L4 (STAGE V) ENGINES 940
FIGURE 8-58. GENERATOR HARNESS - 4000W GENERATOR 942
FIGURE 8-59. GENERATOR HARNESS - 7500W GENERATOR 944
FIGURE 8-60. GROUND CONTROL BOX HARNESS 946
FIGURE 8-61. GROUND CONTROLS TO ENGINE HARNESS 948
FIGURE 8-62. JIB STOW SWITCH HARNESS 950
FIGURE 8-63. LOAD SENSING PIN HARNESS 952
FIGURE 8-64. LOCKOUT VALVE HARNESS 954
FIGURE 8-65. MAIN BOOM CONTROL CABLE HARNESS (1200SJP) 956
FIGURE 8-66. MAIN BOOM CONTROL CABLE HARNESS (1350SJP) 958
FIGURE 8-67. MAIN VALVE HARNESS 960
FIGURE 8-68. PLATFORM CONSOLE BOX HARNESS 962
FIGURE 8-69. PLATFORM CONSOLE BOX HARNESS 966
FIGURE 8-70. PLATFORM INTERFACE HARNESS 968
FIGURE 8-71. PLATFORM VALVE HARNESS 970
FIGURE 8-72. PUMP ADAPTER HARNESS - SAUER PUMPS 972
FIGURE 8-73. RECEPTACLE BOX KIT - 110V IEC YELLOW WITHOUT 2500W GENERATOR (CE & UK CA SPECS) 974
FIGURE 8-74. RECEPTACLE BOX KIT - 220V IEC BLUE WITHOUT 2500W GENERATOR (CE & UK CA SPECS) 976
FIGURE 8-75. RECEPTACLE BOX KIT - 220V CEE7 POST GROUND WITHOUT 2500W GENERATOR (2X4 BOX) (CE & UK CA SPECS) 978
FIGURE 8-76. RECEPTACLE BOX KIT - 220V CEE7 SIDE GROUND WITHOUT 2500W GENERATOR (2X4 BOX) (CE & UK CA SPECS) 980
FIGURE 8-77. RECEPTACLE BOX KIT - 220V AFSINT 107 KEYED GROUND WITHOUT 2500W GENERATOR (2X4 BOX) (CE & UK CA SPECS) 982
FIGURE 8-78. SKYEYE INTERMEDIATE HARNESS 984
FIGURE 8-79. SKYEYE EMITTER HARNESS 986
FIGURE 8-80. SKYEYE RECEIVER HARNESS 988
FIGURE 8-81. SKYLINE HARNESS 990
FIGURE 8-82. STROBE LIGHT HARNESS (AMBER) 992
FIGURE 8-83. TILT SENSOR HARNESS (LEFT) 994
FIGURE 8-84. TILT SENSOR HARNESS (RIGHT) 996

SECTION 9 - DECALS 999

FIGURE 9-1. DECAL INSTALLATION - ANSI SPEC 1000
FIGURE 9-2. DECAL INSTALLATION - AUSTRALIAN SPEC 1002
FIGURE 9-3. DECAL INSTALLATION - BRAZIL SPEC (PORTGUESE/ENGLISH) 1004
FIGURE 9-4. DECAL INSTALLATION - CE & UK CA SPEC 1006
FIGURE 9-5. DECAL INSTALLATION - CHINESE SPEC (CHINESE/ENGLISH) 1008
FIGURE 9-6. DECAL INSTALLATION - CSA SPEC (ENGLISH/FRENCH) 1010
FIGURE 9-7. DECAL INSTALLATION - JAPANESE SPEC (JAPANESE/ENGLISH) 1012
FIGURE 9-8. DECAL INSTALLATION - KOREAN SPEC (KOREAN/ENGLISH) 1014
FIGURE 9-9. DECAL INSTALLATION - LATIN AMERICAN SPEC (SPANISH/ENGLISH) 1016
FIGURE 9-10. DECAL INSTALLATION - OPTIONS 1018

FIGURE 9-11. SKYCUTTER DECAL INSTALLATION (ANSI, ANSI EXPORT, CHINESE & CSA SPECS) 1022
FIGURE 9-12. SKYCUTTER DECAL INSTALLATION (JAPANESE SPECS) 1024
FIGURE 9-13. SKYWELDER DECAL INSTALLATION - 50HZ 1026
FIGURE 9-14. SKYWELDER DECAL INSTALLATION - 60HZ 1028
SECTION 10 - RECOMMENDED SERVICE PARTS STOCK 1031
FIGURE 10-1. RECOMMENDED SERVICE PARTS STOCK 1032
SECTION 11 - SPECIAL OPTIONS 1035
FIGURE 11-1. SPECIAL OPTIONS/ACCESSORIES/KITS 1036
PART NUMBER INDEX 1043

SECTION 1 - FRAME

SECTION 1 - FRAME

FIGURE 1-1. AXLE INSTALLATION - FIXED

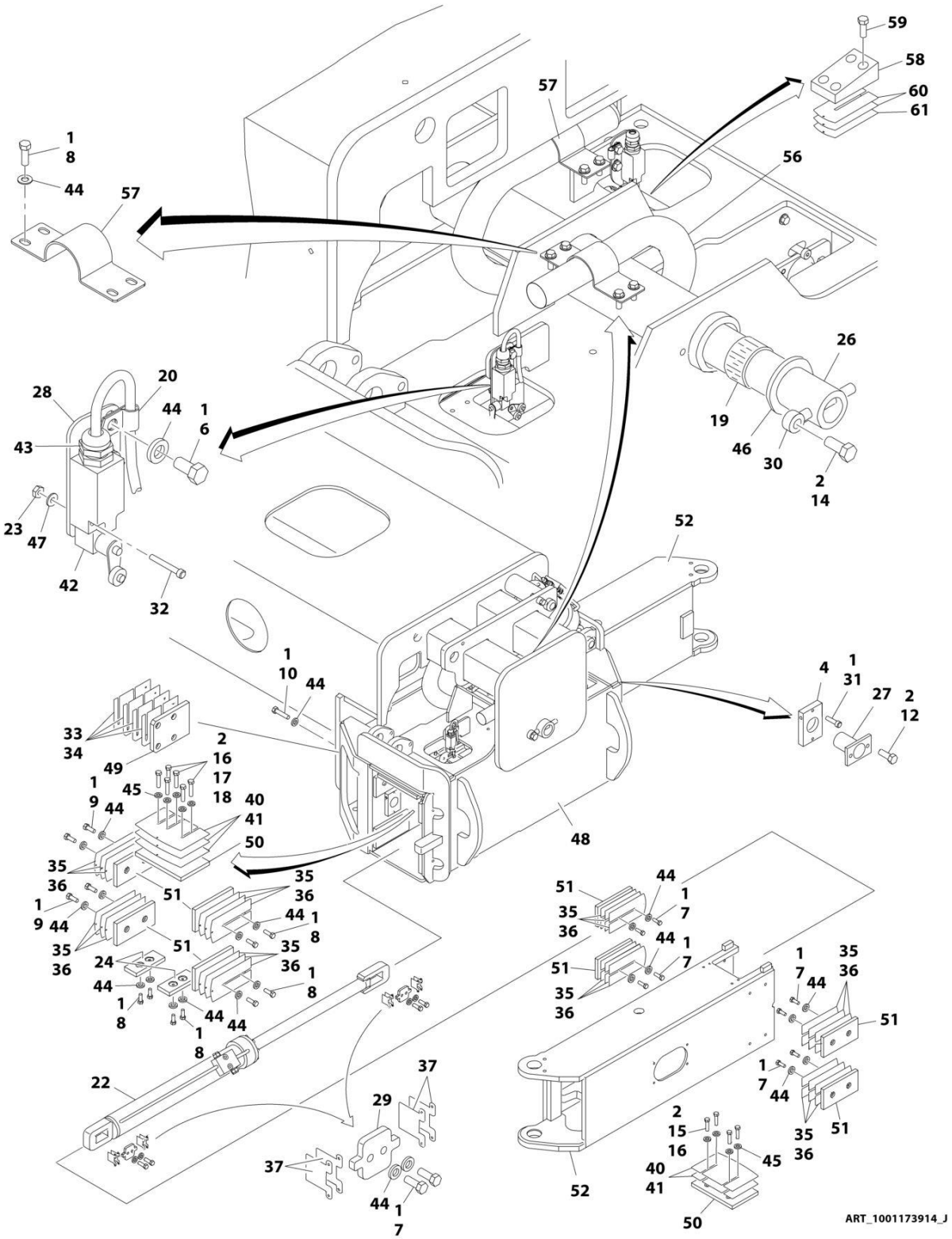

FIGURE 1-1. AXLE INSTALLATION - FIXED

ITEM	PART NUMBER	QTY	DESCRIPTION	REV
	1001173914	Ref	AXLE INSTALLATION - FIXED	J
1	0100011	AR	Compound, Locking	
2	0100019	AR	Compound, Locking	
4	0363037	4	Bar, Stop	
6	0641606	8	Bolt 3/8 x 3/4	
7	0641608	48	Bolt 3/8 x 1	
8	0641609	64	Bolt 3/8 x 1-1/8	
9	0641611	16	Bolt 3/8 x 1-3/8	
10	0641613	8	Bolt 3/8 x 1-5/8	
12	0641808	8	Bolt 1/2 x 1	
14	0642214	1	Bolt 3/4 x 1-3/4	
15	0681813	12	Bolt 1/2 x 1-5/8 Grade 8	
16	0681814	18	Bolt 1/2 x 1-3/4 Grade 8	
17	0681815	12	Bolt 1/2 x 1-7/8 Grade 8	
18	0681816	6	Bolt 1/2 x 2 Grade 8	
19	0962033	2	Bushing	
20	1320263	4	Clamp, Cable	
22	1001251020	4	Axle Extension Cylinder Assembly (See Separate Breakdown in CYLINDER SECTION)	
23	3310805	8	Nut #8	
24	3340881	8	Pad, Wear	
26	3422918	1	Pin	
27	3422960	4	Pin	
28	3573294	4	Plate	
29	3573335	8	Plate	
30	3841287	1	Keeper, Pin	
31	3900270	4	Bolt 1/2 x 1-1/2	
32	3930820	8	Capscrew #8 x 1-1/4	
33	4071035	2	Shim #18 Gauge	
34	4071036	4	Shim #11 Gauge	
35	4071039	10	Shim #18 Gauge	
36	4071040	36	Shim #11 Gauge	
37	4071042	24	Shim #16 Gauge	
40	4071054	8	Shim #18 Gauge	
41	4071055	12	Shim #11 Gauge	
42	4360578	4	Switch, Limit	
43	4460968	4	Connector, Strain Relief	
44	4711600	144	Washer 3/8	
45	4711800	48	Washer 1/2	
46	4740461	1	Thrustwasher	
47	4750800	8	Washer #8	
48	4846383	1	Box, Axle Pivot	
49	1001161401	2	Pad, Axle	
50	1001161402	8	Pad, Wear	
51	1001161403	32	Pad, Wear	
52	4846637	4	Extension, Axle	
55	4240155	6	Strap (Not Shown)	
56	1001193674	4	Sleeve, Nylon	
57	1001191541	8	Bracket, Hose Mount	
58	0363076	2	Bar	

SECTION 1 - FRAME

ITEM	PART NUMBER	QTY	DESCRIPTION	REV
59	0641814	4	Bolt 1/2 x 1-3/4	
60	4071049	4	Shim #11 Gauge	
61	4071050	2	Shim #16 Gauge	
62	2220235	1	Plug (Not Shown - Located on Junction Manifold)	

FIGURE 1-2. AXLE INSTALLATION - OSCILLATING

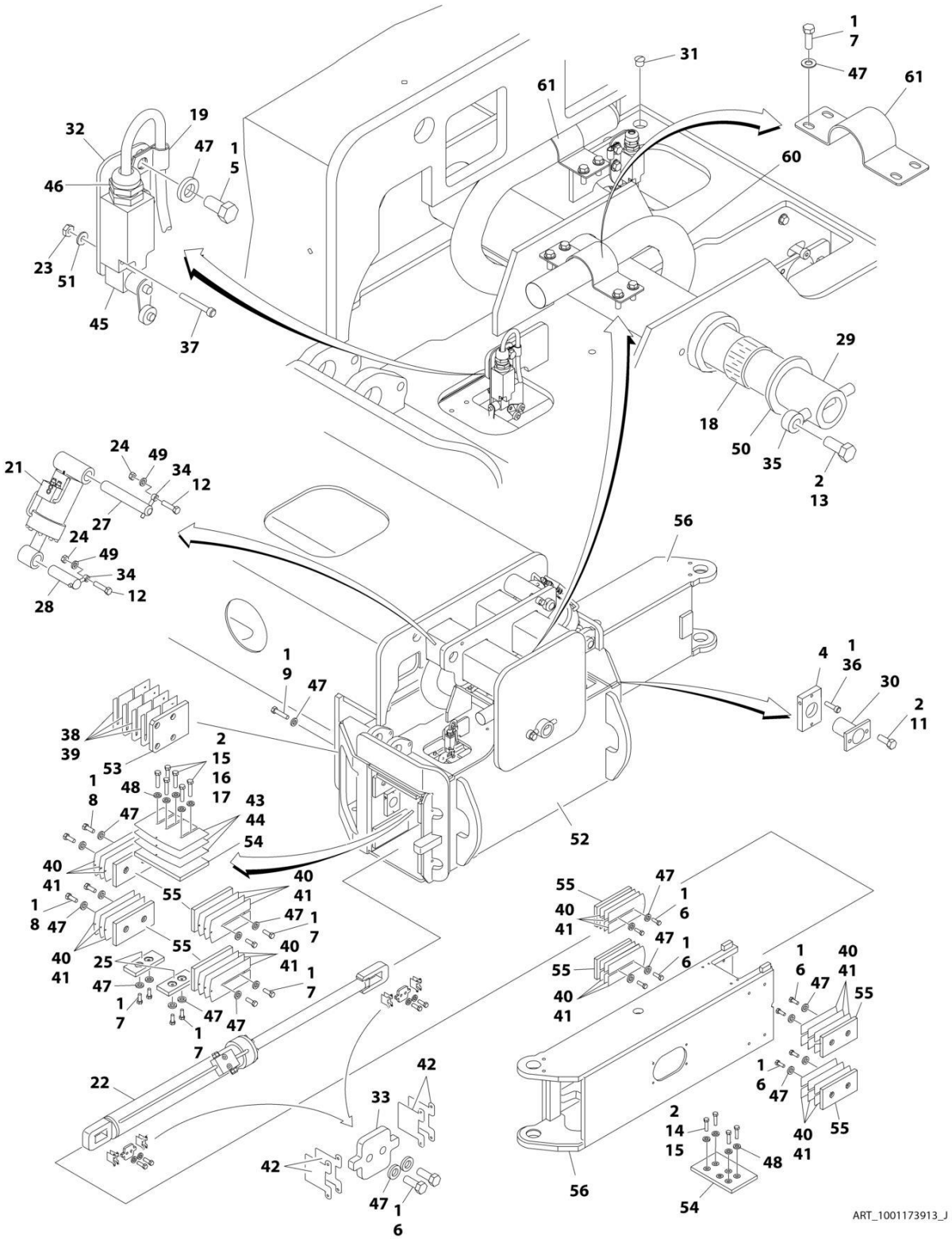

FIGURE 1-2. AXLE INSTALLATION - OSCILLATING

ITEM	PART NUMBER	QTY	DESCRIPTION	REV
	1001173913	Ref	AXLE INSTALLATION - OSCILLATING	J
1	0100011	AR	Compound, Locking	
2	0100019	AR	Compound, Locking	
4	0363037	4	Bar, Stop	
5	0641606	8	Bolt 3/8 x 3/4	
6	0641608	48	Bolt 3/8 x 1	
7	0641609	64	Bolt 3/6 x 1-1/8	
8	0641611	16	Bolt 3/8 x 1-3/8	
9	0641613	8	Bolt 3/8 x 1-5/8	
11	0641808	8	Bolt 1/2 x 1	
12	0642020	4	Bolt 5/8 x 2-1/2	
13	0642214	1	Bolt 3/4 x 1-3/4	
14	0681813	12	Bolt 1/2 x 1-5/8 Grade 8	
15	0681814	18	Bolt 1/2 x 1-3/4 Grade 8	
16	0681815	12	Bolt 1/2 x 1-7/8 Grade 8	
17	0681816	6	Bolt 1/2 x 2 Grade 8	
18	0962033	2	Bushing	
19	1320263	4	Clamp, Cable	
21	1001251019	2	Oscillating Axle Cylinder Assembly (See Separate Breakdown in CYLINDER Section)	
22	1001251020	4	Axle Extension Cylinder Assembly (See Separate Breakdown in CYLINDER Section)	
23	3310805	8	Nut #8	
24	3312005	4	Nut 5/8	
25	3340881	8	Pad, Wear	
27	3422833	2	Pin	
28	3422915	2	Pin	
29	3422918	1	Pin	
30	3422960	4	Pin	
31	3520054	4	Plug	
32	3573294	4	Plate	
33	3573335	8	Plate	
34	3841258	4	Keeper, Pin	
35	3841287	1	Keeper, Pin	
36	3900270	4	Bolt 1/2 x 1-1/2	
37	3930820	8	Capscrew #8 x 1-1/4	
38	4071035	2	Shim #18 Gauge	
39	4071036	4	Shim #11 Gauge	
40	4071039	10	Shim #18 Gauge	
41	4071040	36	Shim #11 Gauge	
42	4071042	24	Shim #16 Gauge	
43	4071054	8	Shim #18 Gauge	
44	4071055	12	Shim #11 Gauge	
45	4360578	4	Switch, Limit	
46	4460968	4	Connector, Strain Relief	
47	4711600	144	Washer 3/8	
48	4711800	48	Washer 1/2	
49	4712000	4	Washer 5/8	
50	4740461	1	Thrustwasher	
51	4750800	8	Washer #8	

SECTION 1 - FRAME

ITEM	PART NUMBER	QTY	DESCRIPTION	REV
52	4846383	1	Box, Axle Pivot	
53	1001161401	2	Pad, Axle	
54	1001161402	8	Pad, Wear	
55	1001161403	32	Pad, Wear	
56	4846637	4	Extension, Axle	
59	4240155	6	Strap (Not Shown)	
60	1001193674	4	Sleeve, Nylon	
61	1001191541	8	Bracket, Hose Mount	

FIGURE 1-3. STEER INSTALLATION

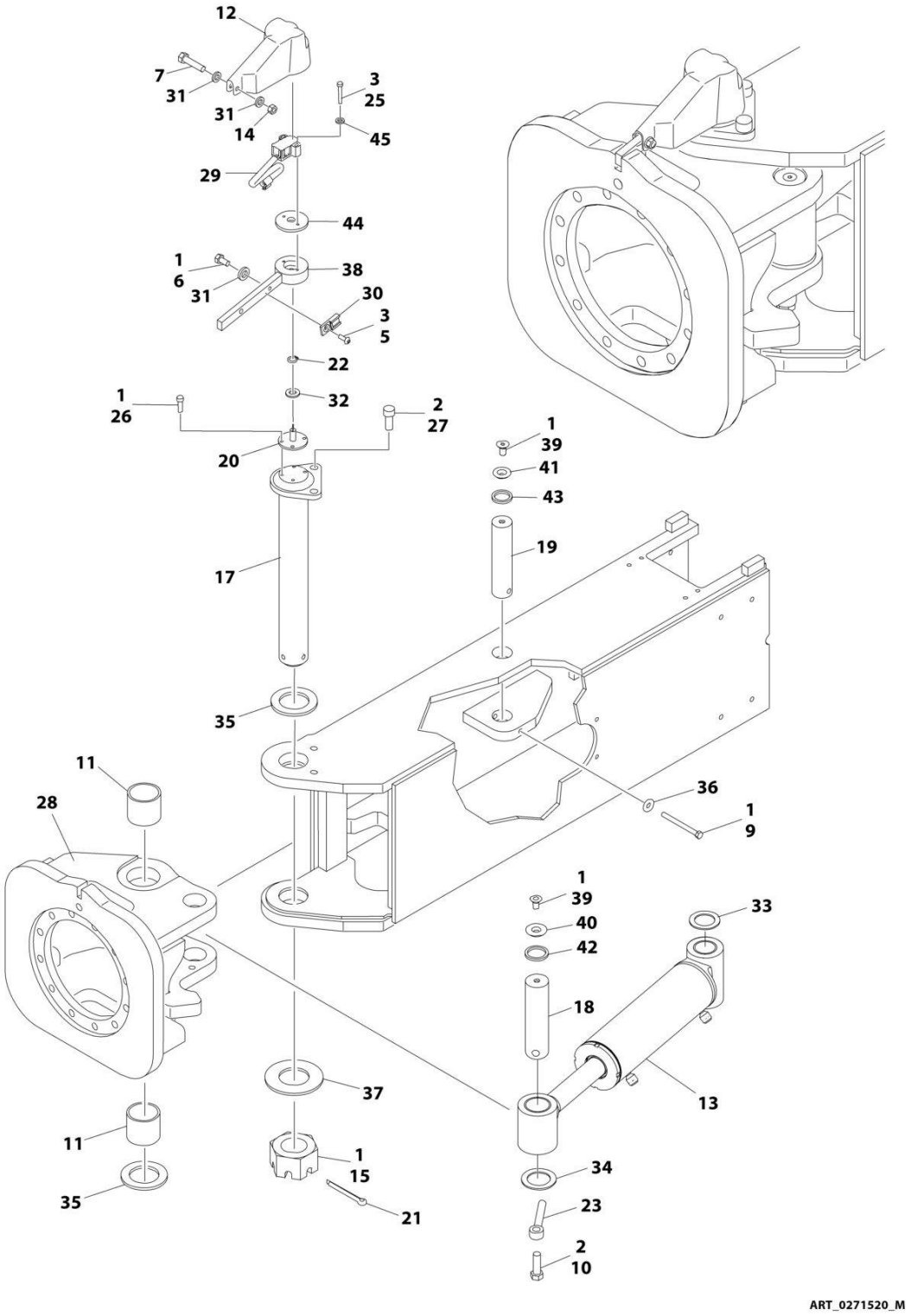

FIGURE 1-3. STEER INSTALLATION

ITEM	PART NUMBER	QTY	DESCRIPTION	REV
	0271520	Ref	STEER INSTALLATION	M
1	0100011	AR	Compound, Locking	
2	0100019	AR	Compound, Locking	
3	0100035	AR	Compound, Locking	
5	0630464	4	Screw #10 x 1/2	
6	0641505	4	Bolt 5/16 x 5/8	
7	0641511	4	Bolt 5/16 x 1-3/8	
9	0641634	4	Bolt 3/8 x 4-1/4	
10	0642016	4	Bolt 5/8 x 2	
11	0962423	8	Bushing	
12	1671040	4	Cover, Sensor	
13	1001251031	4	Steer Cylinder Assembly (See Separate Breakdown in CYLINDER Section)	
14	3311505	4	Nut 5/16	
15	3300464	4	Nut, Slotted	
17	3422917	4	Kingpin	
18	3422940	4	Pin, Steer Cylinder (Outer)	
19	3422941	4	Pin, Steer Cylinder (Inner)	
20	3423256	4	Pin, Sensor	
21	3451214	4	Pin, Cotter 3/8 x 3-1/2	
22	3760383	4	Ring, Retaining	
23	3841258	4	Keeper, Pin	
25	3931020	8	Capscrew #10 x 1-1/4	
26	3931412	16	Capscrew 1/4 x 3/4	
27	3932024	8	Capscrew 5/8 x 1-1/2	
28	1001099632	4	Spindle	
29	4360505	4	Switch, Rotary Angle Sensor (Steer)	
30	4460914	4	Terminal	
31	4711500	12	Washer 5/16	
32	4711800	4	Washer 1/2	
33	4740181	4	Thrustwasher	
34	4740229	4	Thrustwasher	
35	4740505	8	Thrustwasher	
36	4751600	4	Washer 3/8	
37	4755000	4	Washer 2-1/2	
38	0200833	4	Arm, Steer	
39	0741606	8	Screw 3/8 x 3/4	
40	1120549	4	Cap, Seal (Outer)	
41	1120550	4	Cap, Seal (Inner)	
42	3960551	4	Seal (Outer)	
43	3960552	4	Seal (Inner)	
44	0080277	4	Adapter, Angle Sensor Pilot	
45	4811600	8	Washer M5	

FIGURE 1-4. WHEEL DRIVE INSTALLATION - REGGIANA RIDUTTORI

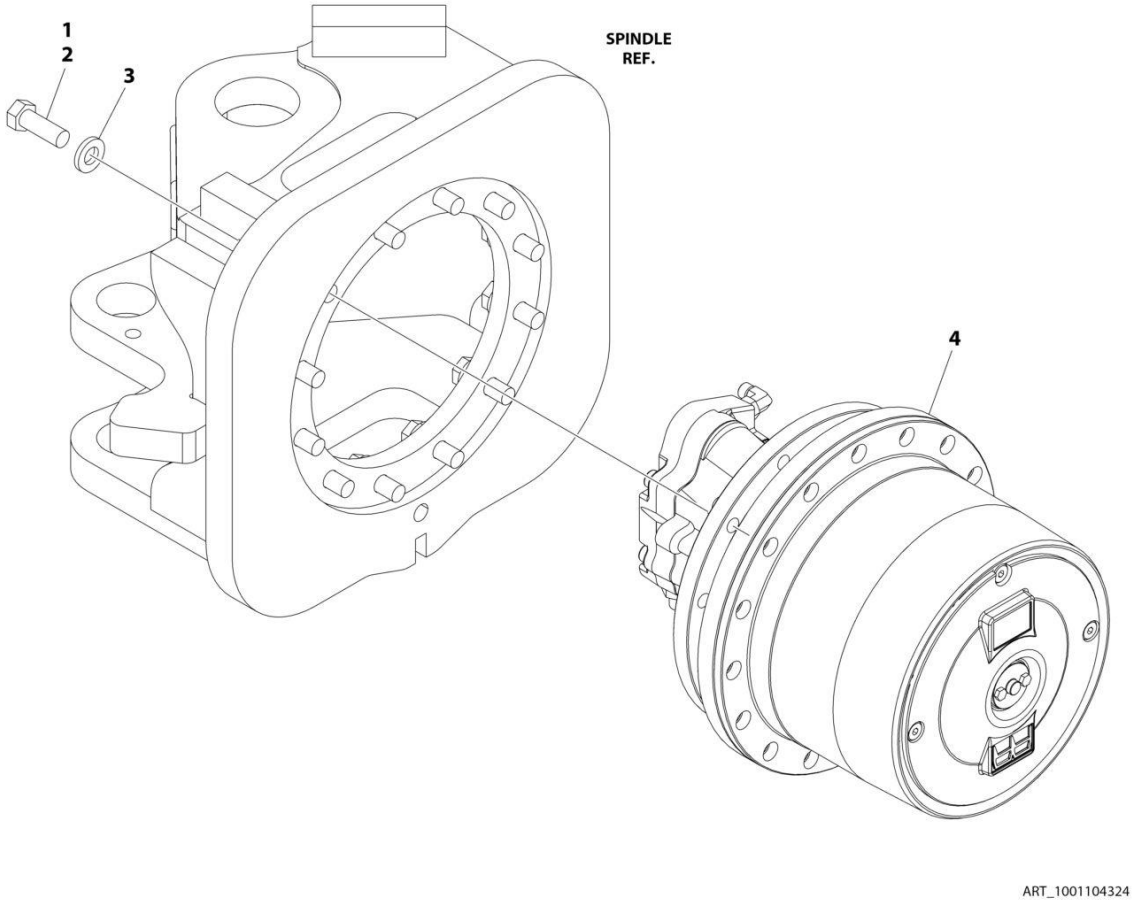

FIGURE 1-4. WHEEL DRIVE INSTALLATION - REGGIANA RIDUTTORI

ITEM	PART NUMBER	QTY	DESCRIPTION	REV
	1001104324	Ref	WHEEL DRIVE INSTALLATION - REGGIANA RIDUTTORI	B
1	0100019	AR	Compound, Locking	
2	0701617	48	Bolt M16 x 45 (12 Per Wheel)	
3	4892000	48	Washer 5/8 (12 Per Wheel)	
4	1001104315	4	Drive Hub and Motor Assembly - Reggiana Riduttori (See Separate Breakdown in this Section)	

FIGURE 1-5. DRIVE HUB AND MOTOR ASSEMBLY - REGGIANA RIDUTTORI

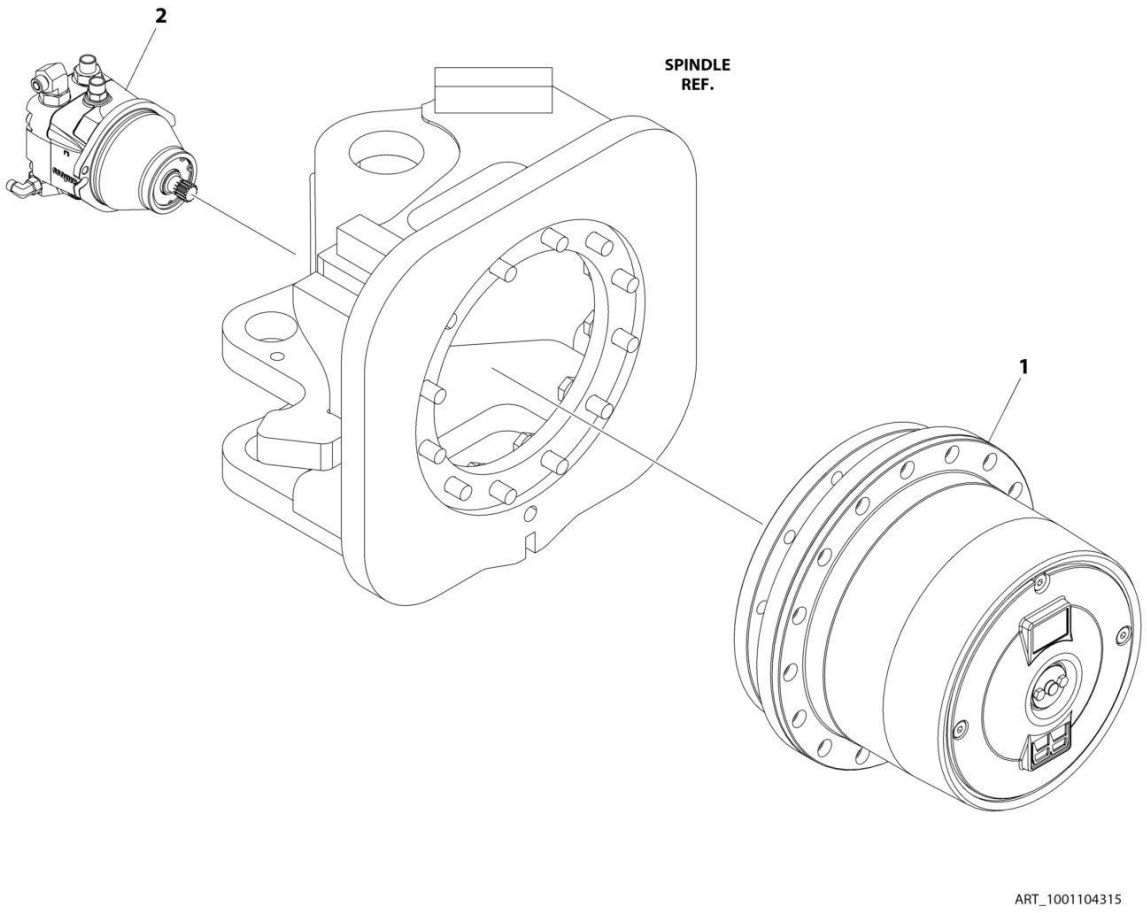

FIGURE 1-5. DRIVE HUB AND MOTOR ASSEMBLY - REGGIANA RIDUTTORI

ITEM	PART NUMBER	QTY	DESCRIPTION	REV
	1001104315	Ref	DRIVE HUB AND MOTOR ASSEMBLY - REGGIANA RIDUTTORI	B
		Ref	Note: Various brands used on Machines. When replacing complete hub, note that all 4 hubs must be the same brand.	
		Ref	Note: Various brands used on Machines. Identify brand before ordering replacement parts.	
1	1001104325	4	Drive Hub Assembly - Reggiana Riduttori (See Separate Breakdown in this Section)	
2	3160339	4	Drive Motor Assembly (See Separate Breakdown in this Section)	

FIGURE 1-6. DRIVE HUB ASSEMBLY - REGGIANA RIDUTTORI

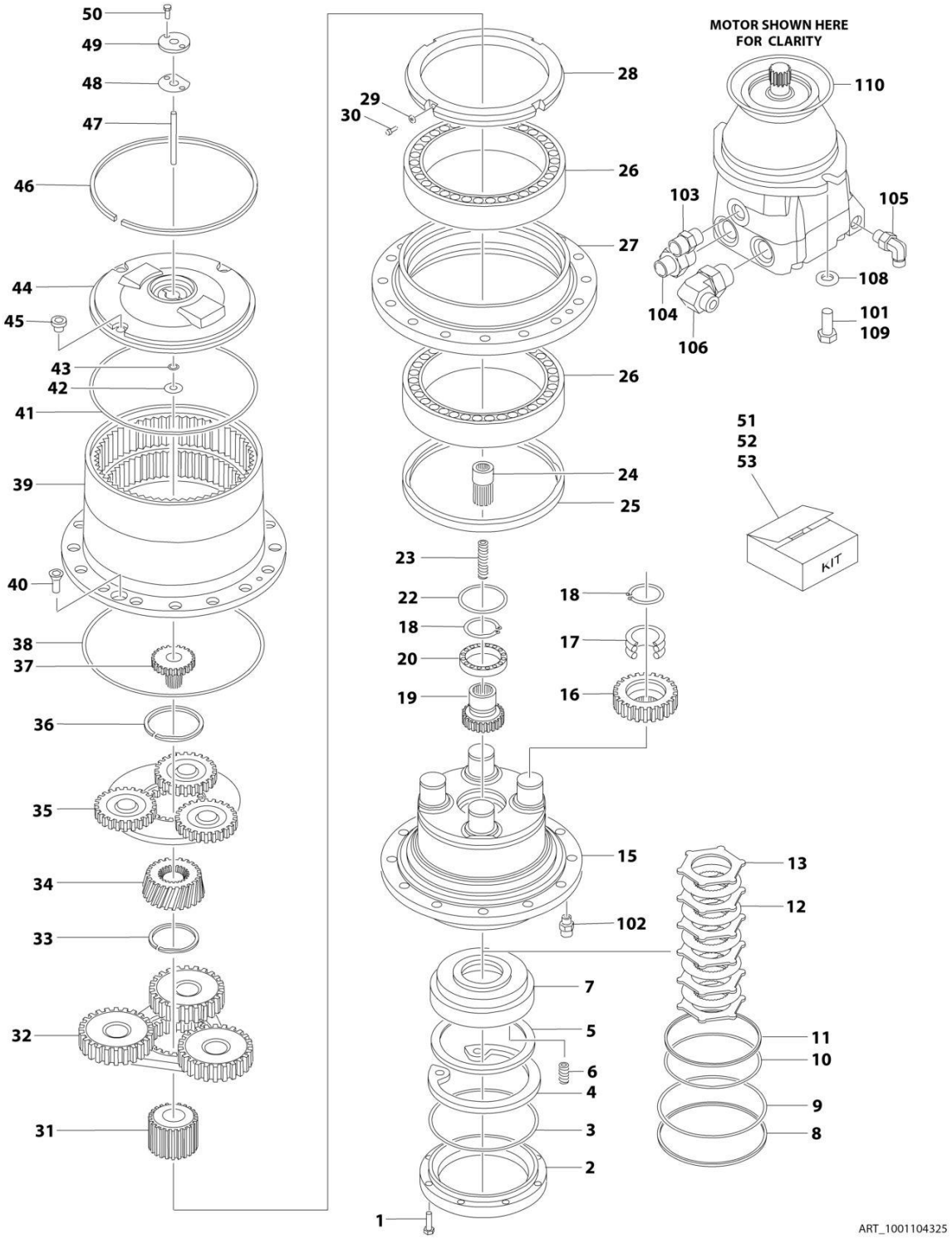

FIGURE 1-6. DRIVE HUB ASSEMBLY - REGGIANA RIDUTTORI

ITEM	PART NUMBER	QTY	DESCRIPTION	REV
	1001104325	Ref	DRIVE HUB ASSEMBLY - REGGIANA RIDUTTORI	G
		Ref	Note: Various brands used on Machines. Identify brand before ordering replacement parts.	
	1001101550	1	Hub, Torque	C
1	70002015	8	Bolt M8 x 25	
2	70002016	1	Ring, Motor Support	
3	See Note	NSS	O-Ring (Note: Use Item 51)	
4	70002018	1	Snap Ring	
5	70002019	1	Retainer, Spring	
6	70002020	9	Spring	
7	70002021	1	Piston	
8	See Note	NSS	Ring, Back-up (Note: Use Item 51 or 53)	
9	See Note	NSS	O-Ring (Note: Use Item 51 or 53)	
10	See Note	NSS	O-Ring (Note: Use Item 51 or 53)	
11	See Note	NSS	Ring, Back-up (Note: Use Item 51 or 53)	
12	70002026	5	Disc, Friction	
13	70002027	6	Disc, Steel	
15	70002029	1	Spindle	
16	70002030	4	Gear, Planetary	
17	70002031	4	Bearing	
18	70002032	5	Snap Ring	
19	70002033	1	Gear, Brake/Input	
20	70002034	1	Bearing	
22	70002035	1	Ring, Wear	
23	70002036	1	Spring	
24	70002037	1	Shaft, Engagement	
25	See Note	NSS	Seal (Note: Use Item 51)	
26	70002039	2	Bearing Assembly	
27	70002040	1	Support, Hub	
28	70002041	1	Nut, Retaining	
29	70002674	4	Washer	
30	70002674	4	Screw	
31	70002044	1	Gear, Planetary Sun	
32	70002045	1	Reduction Assembly, Secondary	
33	70002046	1	Snap Ring	
34	70002047	1	Gear, Secondary Input Sun	
35	70002048	1	Reduction Assembly, Primary	
36	70002049	1	Snap Ring	
37	70002050	1	Gear, Primary Input Sun	
38	See Note	NSS	O-Ring (Note: Use Item 51)	
39	See Note	NSS	Housing, Hub (Note: Not Available - Purchase Complete Assembly)	
40	70002052	2	Screw, Countersunk	
41	See Note	NSS	O-Ring (Note: Use Item 51 or 52)	
42	See Note	NSS	Thrustwasher (Note: Use Item 52)	
43	See Note	NSS	O-Ring (Note: Use Item 51 or 52)	
44	See Note	NSS	Cover, Hub (Note: Use Item 52)	
45	70002057	3	Plug	
46	See Note	NSS	Snap Ring (Note: Use Item 52)	
47	See Note	NSS	Pin, Engagement (Note: Use Item 52)	

SECTION 1 - FRAME

ITEM	PART NUMBER	QTY	DESCRIPTION	REV
48	See Note	NSS	Gasket (Note: Use Item 51 or 52)	
49	See Note	NSS	Cover, Engagement (Note: Use Item 52)	
50	See Note	NSS	Screw (Note: Use Item 52)	
51	70002248	1	Seal Kit (Includes Items 3, 8-11, 25, 38, 41, 43 & 48)	
52	70002247	1	Cover Kit (Includes Items 41-50)	
53	70002249	1	Brake Kit (Includes Items 4-13)	
101	0761214	2	Bolt M12 x 30	
102	2110404	1	Fitting, Adapter	
103	2110808	1	Fitting, Adapter	
104	2110812	1	Fitting, Adapter	
105	2130406	1	Fitting, 90 Adapter	
106	2130812	1	Fitting, 90 Adapter	
108	5241200	2	Washer M12	
109	0100011	AR	Compound, Locking	
110	3790158	1	O-Ring	

FIGURE 1-7. DRIVE MOTOR ASSEMBLY

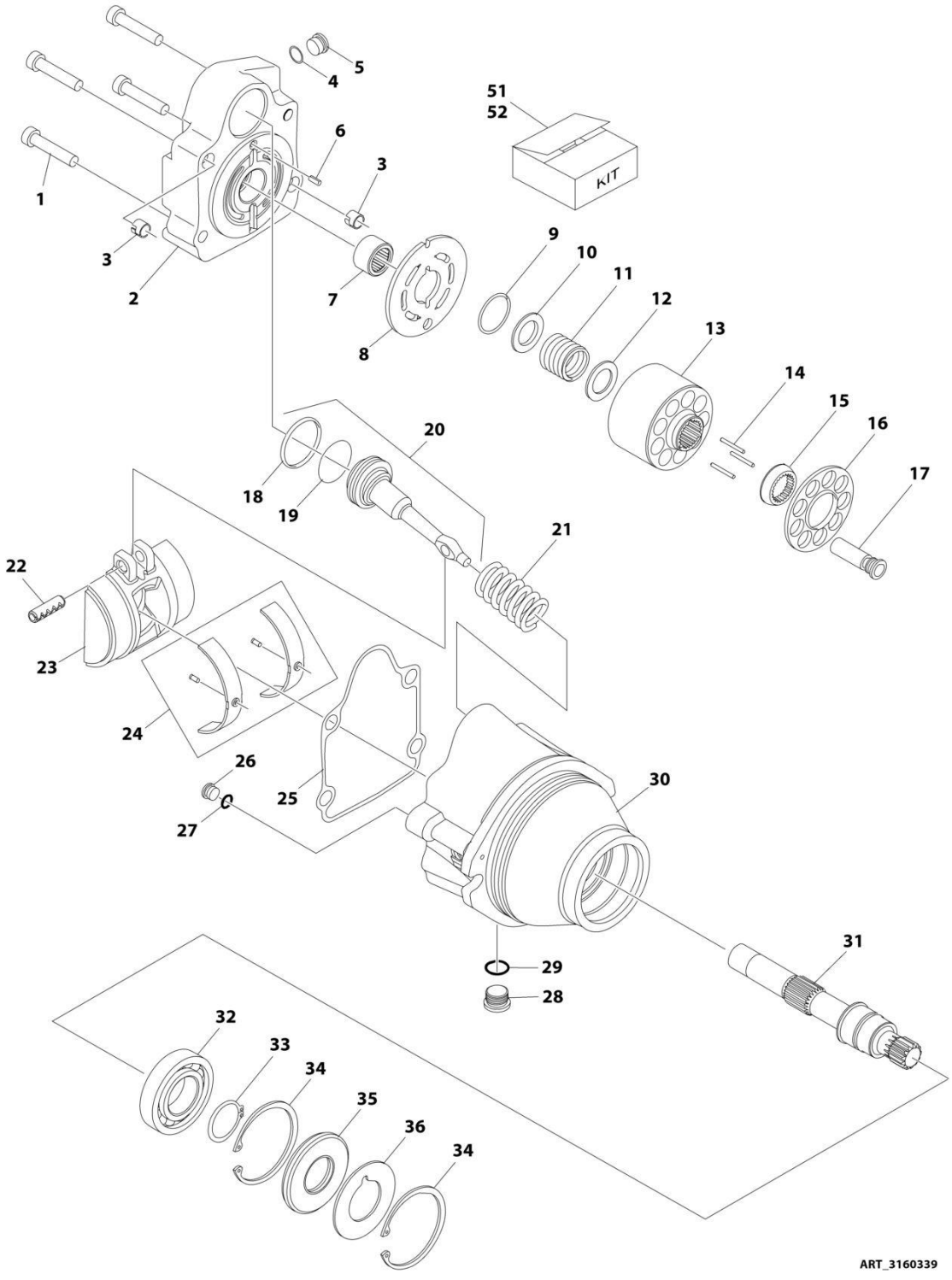

FIGURE 1-7. DRIVE MOTOR ASSEMBLY

ITEM	PART NUMBER	QTY	DESCRIPTION	REV
	3160339	Ref	DRIVE MOTOR ASSEMBLY	D
1	7022368	4	Bolt	
2	70000859	1	End Cap, Motor	
3	70003628	2	Locating Pin	
4	See Note	NSS	O-Ring (Note: Use Item 51)	
5	7007420	1	Plug (Includes Item 4)	
6	7007446	1	Pin, Dowel	
7	7021249	1	Bearing, Needle	
8	70000854	1	Plate, Valve	
9	7022311	1	Snap Ring	
10	7022314	1	Retainer, Spring	
11	7024867	1	Spring	
12	7024868	1	Washer	
13	70000855	1	Block, Cylinder	
14	7021275	3	Pin, Slipper	
15	70000856	1	Guide	
16	70000857	1	Retainer, Slipper	
17	7024865	9	Piston, Cylinder	
18	See Note	NSS	Ring, Piston (Note: Use Item 51)	
19	See Note	NSS	O-Ring (Note: Use Item 51)	
20	70000860	1	Piston, Servo (Includes Items 18 & 19)	
21	70000861	1	Spring	
22	See Note	NSS	Pin (Note: Not Available for Purchase)	
23	70000853	1	Swash Plate	
24	70000852	1	Bearing Kit	
25	See Note	NSS	Gasket (Note: Use Item 51)	
26	See Note	NSS	Plug (Note: Not Available for Purchase)	
27	See Note	NSS	O-Ring (Note: Use Item 51)	
28	7022321	1	Plug (Includes Item 29)	
29	See Note	NSS	O-Ring (Note: Use Item 51)	
30	See Note	NSS	Housing (Note: Not Available - Purchase Complete Motor)	
31	70000858	1	Shaft	
32	7007437	1	Bearing	
33	7007439	1	Snap Ring	
34	7007438	2	Snap Ring	
35	See Note	NSS	Seal (Note: Use Item 51)	
36	7022371	1	Washer, Seal Support	
51	70000862	1	Kit 1 - Motor Seal Kit (Includes Items 4, 18, 19, 25, 27, 29 & 35)	
52	7027740	1	Kit 2 - Cylinder Block Kit (Includes Items 9-17)	

FIGURE 1-8. WHEEL DRIVE INSTALLATION - PMP PUMP

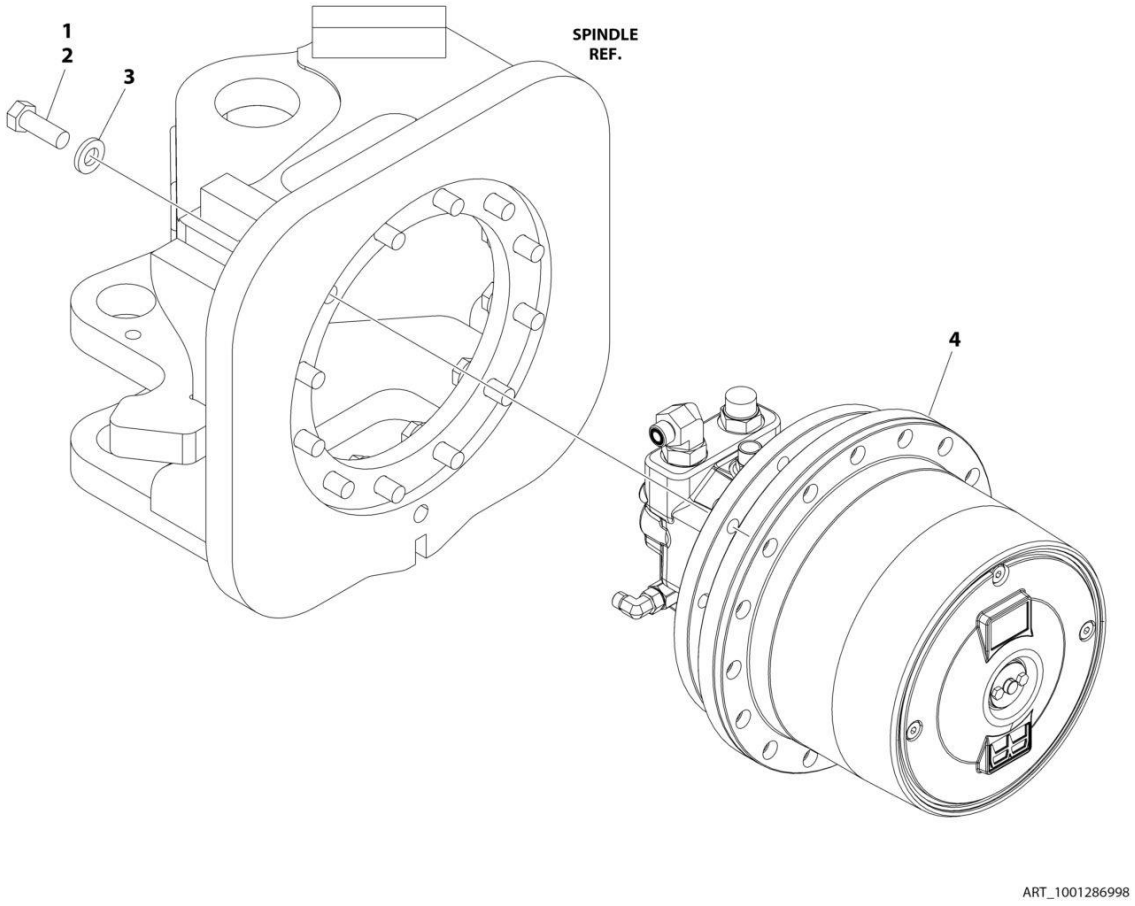

FIGURE 1-8. WHEEL DRIVE INSTALLATION - PMP PUMP

ITEM	PART NUMBER	QTY	DESCRIPTION	REV
	1001286998	Ref	WHEEL DRIVE INSTALLATION - PMP PUMP	A
1	0100019	AR	Compound, Locking	
2	0701617	48	Bolt M16 x 45	
3	4892000	48	Washer 5/8	
4	1001286999	4	Drive Hub and Motor Assembly - PMP Pumps (See Separate Breakdown in this Section)	

FIGURE 1-9. DRIVE HUB AND MOTOR ASSEMBLY - PMP PUMP

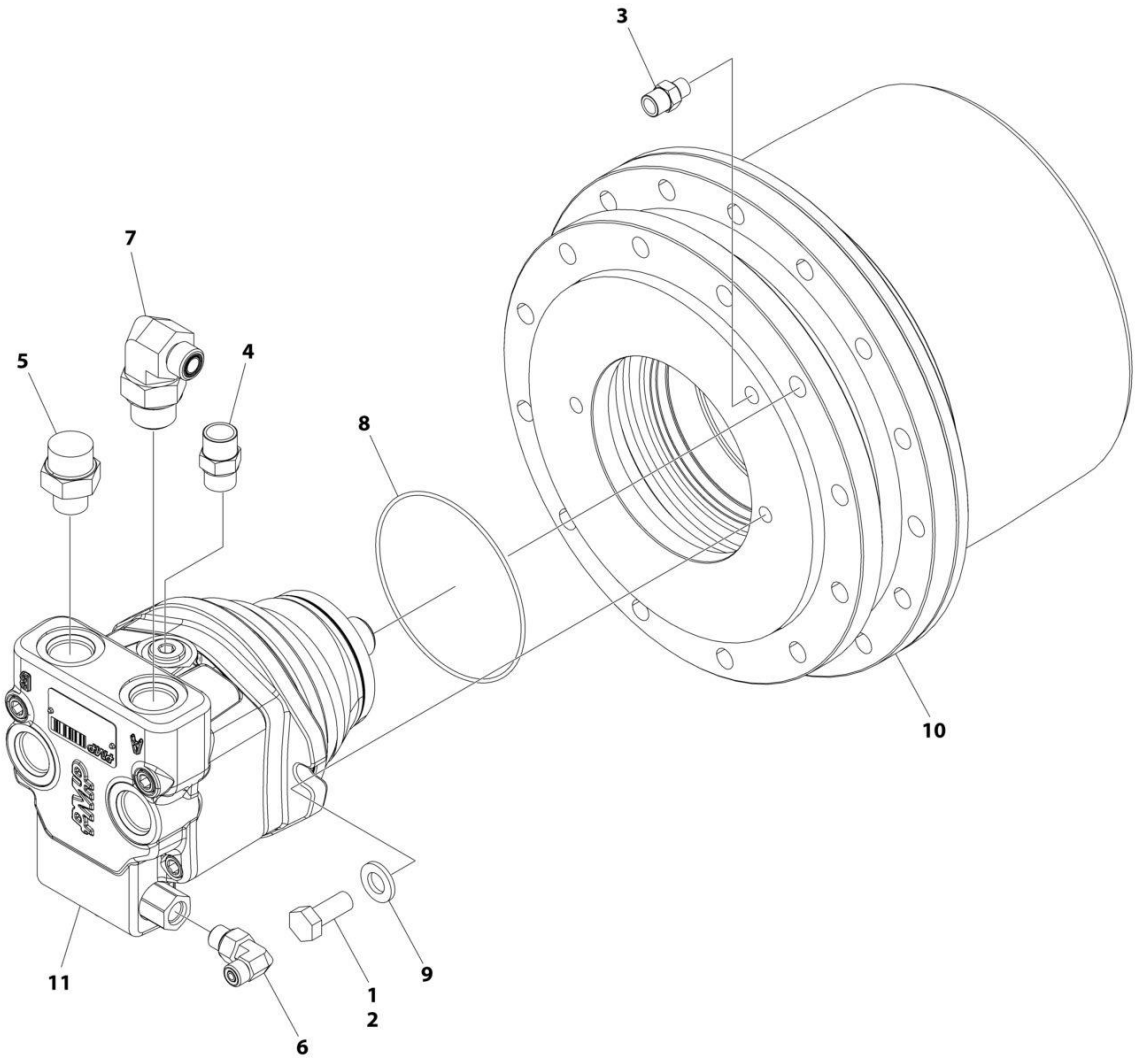

FIGURE 1-9. DRIVE HUB AND MOTOR ASSEMBLY - PMP PUMP

ITEM	PART NUMBER	QTY	DESCRIPTION	REV
	1001286999	Ref	DRIVE HUB AND MOTOR ASSEMBLY - PMP PUMP	A
1	0100011	AR	Compound, Locking	
2	0761214	2	Bolt M12 x 30	
3	2110404	1	Fitting, Straight ORFS/ORB	
4	2110808	1	Fitting, Straight ORFS/ORB	
5	2110812	1	Fitting, Straight ORFS/ORB	
6	2130406	1	Fitting, 90 ORFS/ORB	
7	2130812	1	Fitting, 90 ORFS/ORB	
8	3790158	1	O-Ring	
9	5241200	2	Washer	
10	1001101550	1	Drive Hub Assembly (See Separate Breakdown in this Section)	
11	1001286959	1	Drive Motor Assembly (See Separate Breakdown in this Section)	

FIGURE 1-10. DRIVE MOTOR ASSEMBLY - PMP PUMPS

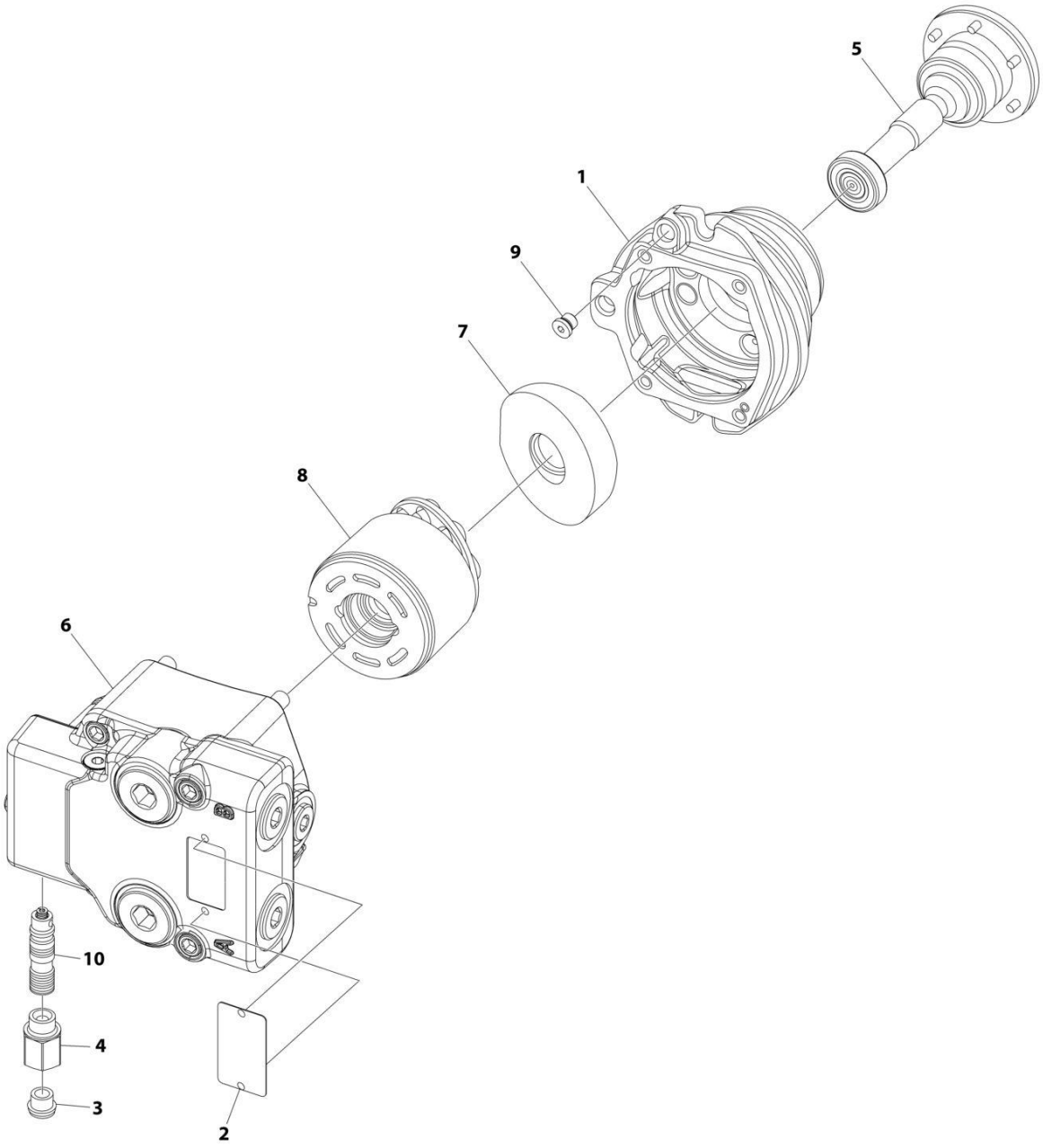

FIGURE 1-10. DRIVE MOTOR ASSEMBLY - PMP PUMPS

ITEM	PART NUMBER	QTY	DESCRIPTION	REV
	1001286959	Ref	DRIVE MOTOR ASSEMBLY	A
	See Note	Ref	(Note: No Other Service Parts Available)	
1	NPN	1	Body	
2	See Note	NSS	Plate, Serial Number (Note: Not Available for Purchase)	
3	70008513	1	Plug	
4	70008514	1	Fitting, Straight	
5	70008515	1	Assembly, Shaft	
6	70008516	1	Assembly, Valve	
6	70008521	1	Gasket (Between Valve Assembly & Rotor Assembly)	
6	70005023	2	Rivet	
6	70008522	1	Cartridge, Shuttle Valve	
6	70008523	2	Capscrew M10 x 100 CL12.9	
6	70008524	2	Capscrew M10 x 70 CL12.9	
7	70008517	1	Assembly, Swash Plate	
8	70008518	1	Assembly, Rotor	
9	70008519	1	Plug	
10	70008520	1	Cartridge, Control Valve	

FIGURE 1-11. TIRE AND WHEEL INSTALLATION - FOAM FILLED

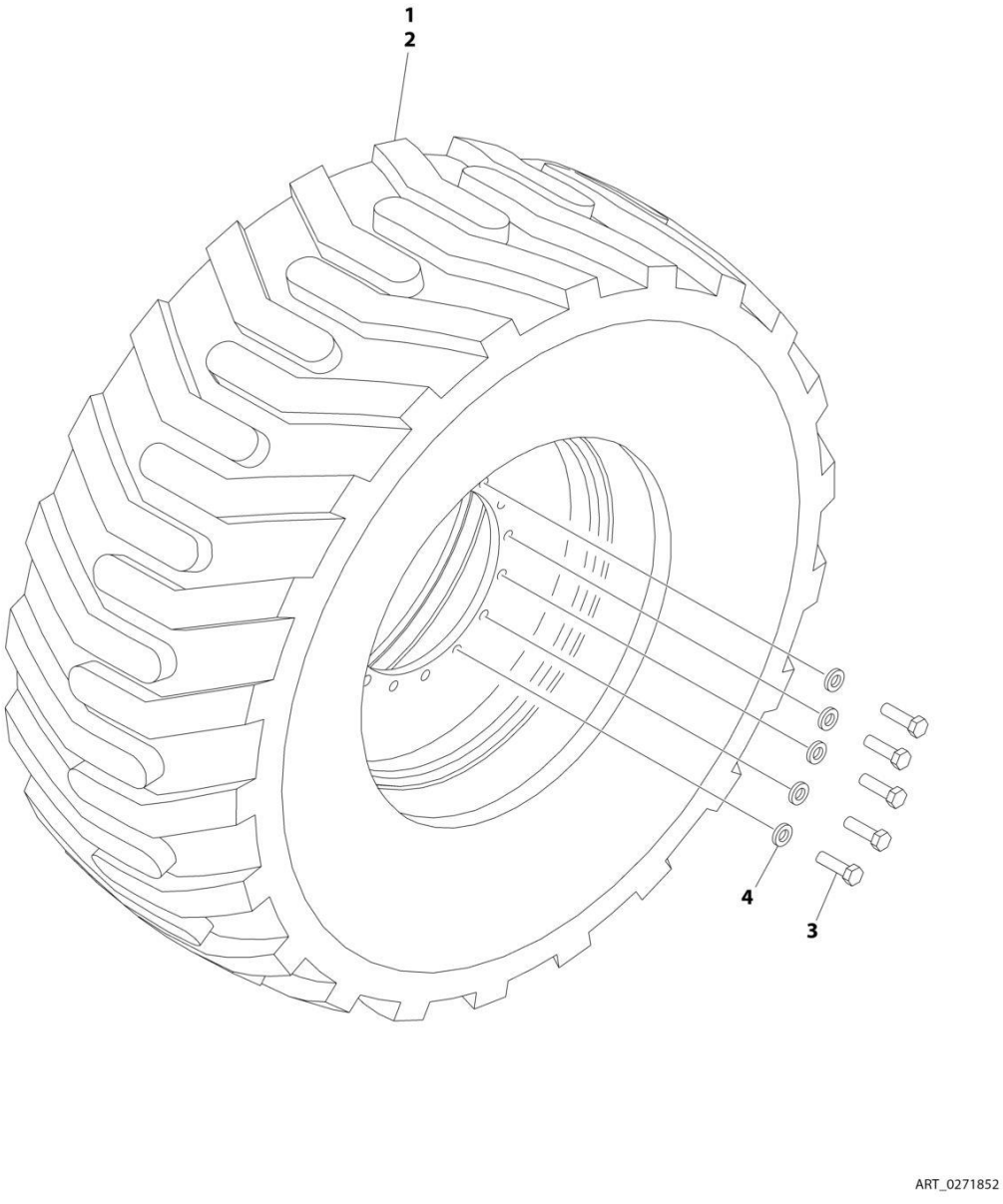

FIGURE 1-11. TIRE AND WHEEL INSTALLATION - FOAM FILLED

ITEM	PART NUMBER	QTY	DESCRIPTION	REV
	0271852	Ref	TIRE AND WHEEL INSTALLATION - FOAM - FILLED	B
		Ref	Note: Assemblies may require ballast/foam filling to manufacturer's specifications prior to installing on a machine. Refer to Operation and Safety or Service and Maintenance Manuals. Purchase individual tire and/or rim only if able to foam fill tire and wheel assembly, otherwise, purchase complete assembly.	
1	0272055	2	Right Side Tire and Wheel Assembly - Foam - Filled	
2	0272056	2	Left Side Tire and Wheel Assembly - Foam - Filled	
3	0701619	64	Bolt M16 x 55 (16 Per Wheel)	
4	4892000	64	Washer 5/8 (16 Per Wheel)	

FIGURE 1-12. TIRE AND WHEEL INSTALLATION - FOAM FILLED NON MARKING

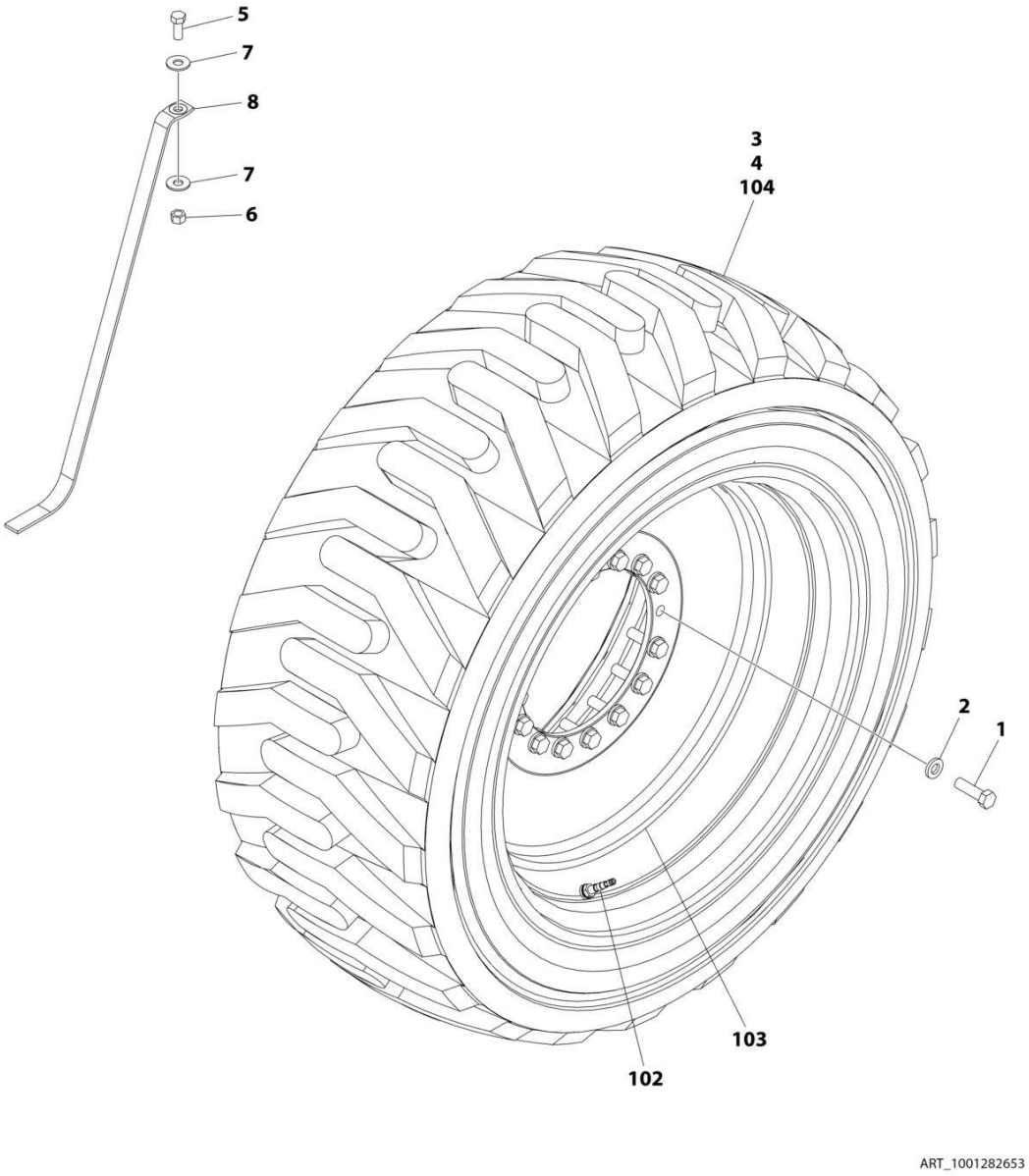

FIGURE 1-12. TIRE AND WHEEL INSTALLATION - FOAM FILLED NON MARKING

ITEM	PART NUMBER	QTY	DESCRIPTION	REV
	1001282653	Ref	TIRE AND WHEEL INSTALLATION - FOAM FILLED	B
		Ref	Note: Assemblies may require ballast/foam filling to manufacturer's specifications prior to installing on a machine. Refer to Operation and Safety or Service and Maintenance Manuals. Purchase individual tire and/or rim only if able to foam fill tire and wheel assembly, otherwise, purchase complete assembly.	
1	0701619	64	Bolt M16 x 55 (16 Per Wheel)	
2	4892000	64	Washer 5/8 (16 Per Wheel)	
3	1001282651	2	Right Side Tire and Wheel Assembly (Includes Items 102-104)	
4	1001282652	2	Left Side Tire and Wheel Assembly (Includes Items 102-104)	
5	0641810	1	Bolt 1/2 x 1-1/4	
6	3311805	1	Nut 1/2	
7	4751800	2	Washer 1/2	
8	1001275637	1	Strap, Anti-static	
102	4641122	1	Valve Stem	
103	4860236	1	Rim	
104	1001282650	1	Tire	

FIGURE 1-13. TIRE AND WHEEL INSTALLATION - SOLID

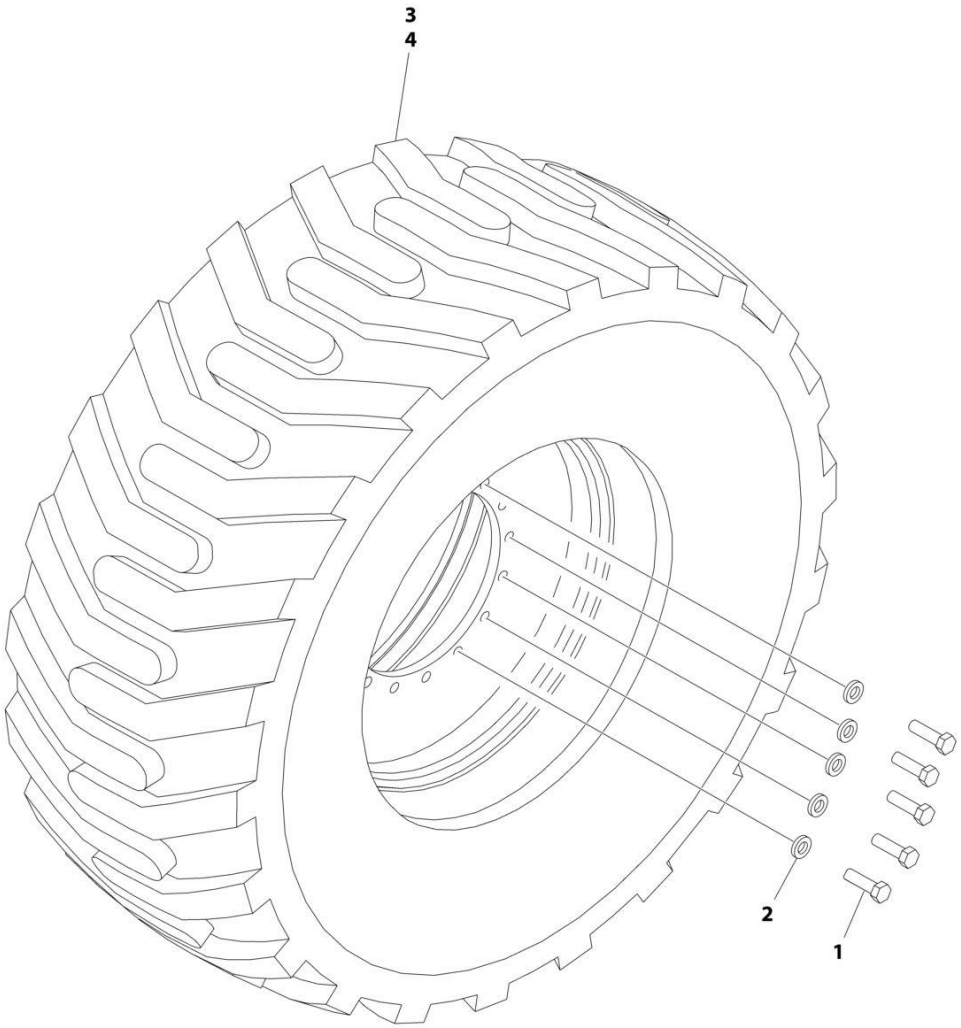

FIGURE 1-13. TIRE AND WHEEL INSTALLATION - SOLID

ITEM	PART NUMBER	QTY	DESCRIPTION	REV
	1001115961	Ref	TIRE AND WHEEL INSTALLATION - SOLID	A
1	0701619	64	Bolt M16 x 55 (16 Per Wheel)	
2	4892000	64	Washer 5/8 (16 Per Wheel)	
3	1001112716	2	Right Side Tire and Wheel Assembly - Solid	
4	1001112669	2	Left Side Tire and Wheel Assembly - Solid	

FIGURE 1-14. TIRE AND WHEEL INSTALLATION - SOLID NON MARKIMG

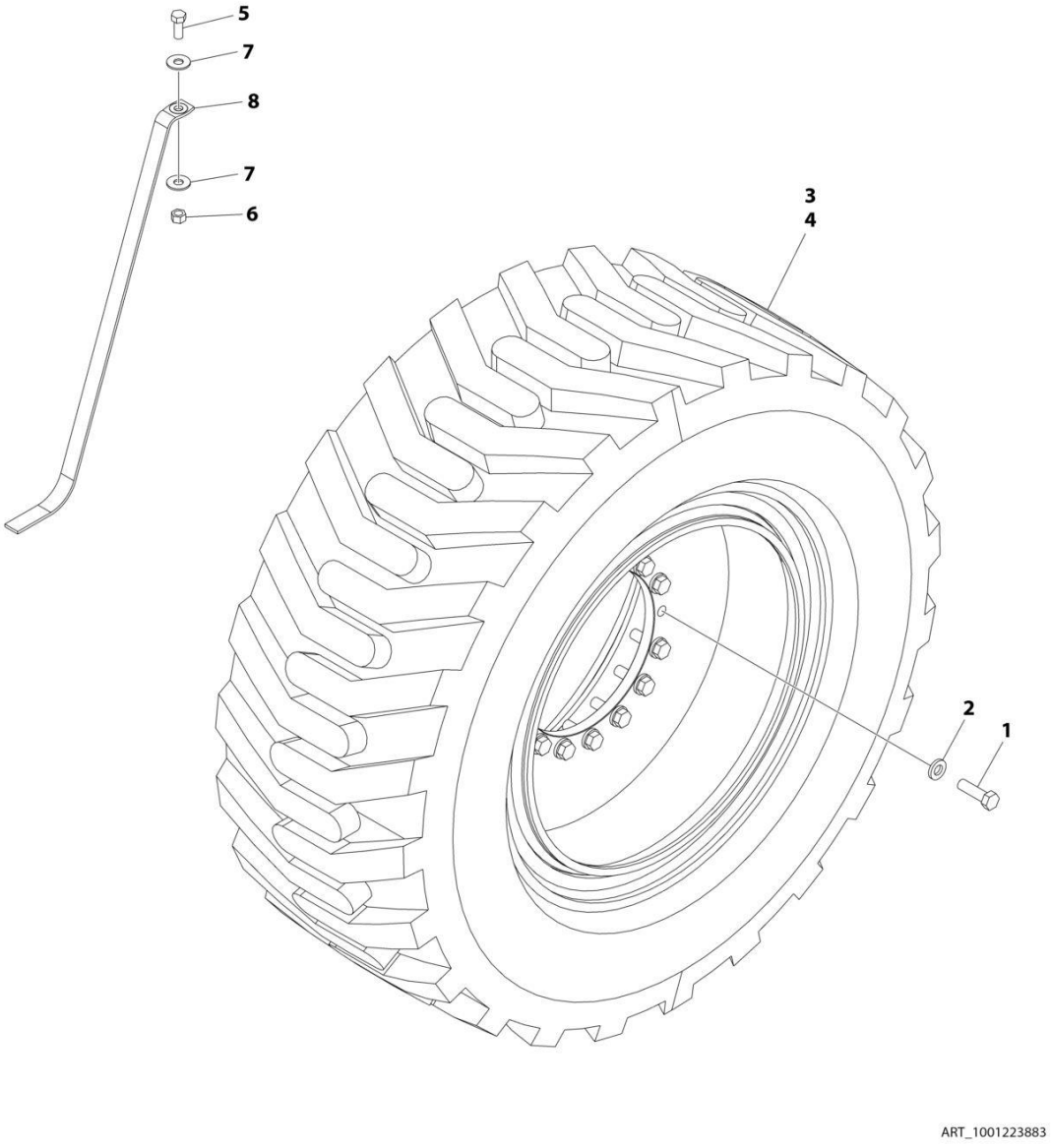

FIGURE 1-14. TIRE AND WHEEL INSTALLATION - SOLID NON MARKIMG

ITEM	PART NUMBER	QTY	DESCRIPTION	REV
	1001223883	Ref	TIRE AND WHEEL INSTALLATION - SOLID NON MARKING	B
1	0701619	64	Bolt M16 x 55 (16 Per Wheel)	
2	4892000	64	Washer 5/8 (16 Per Wheel)	
3	1001216876	2	Left Side Tire and Wheel Assembly - Solid	
4	1001216877	2	Right Side Tire and Wheel Assembly - Solid	
5	0641810	1	Bolt 1/2 x 1-1/4	
6	3311805	1	Nut 1/2	
7	4751800	2	Washer 1/2	
8	1001275637	1	Strap, Anti-static	

FIGURE 1-15. FRAME VALVES INSTALLATION

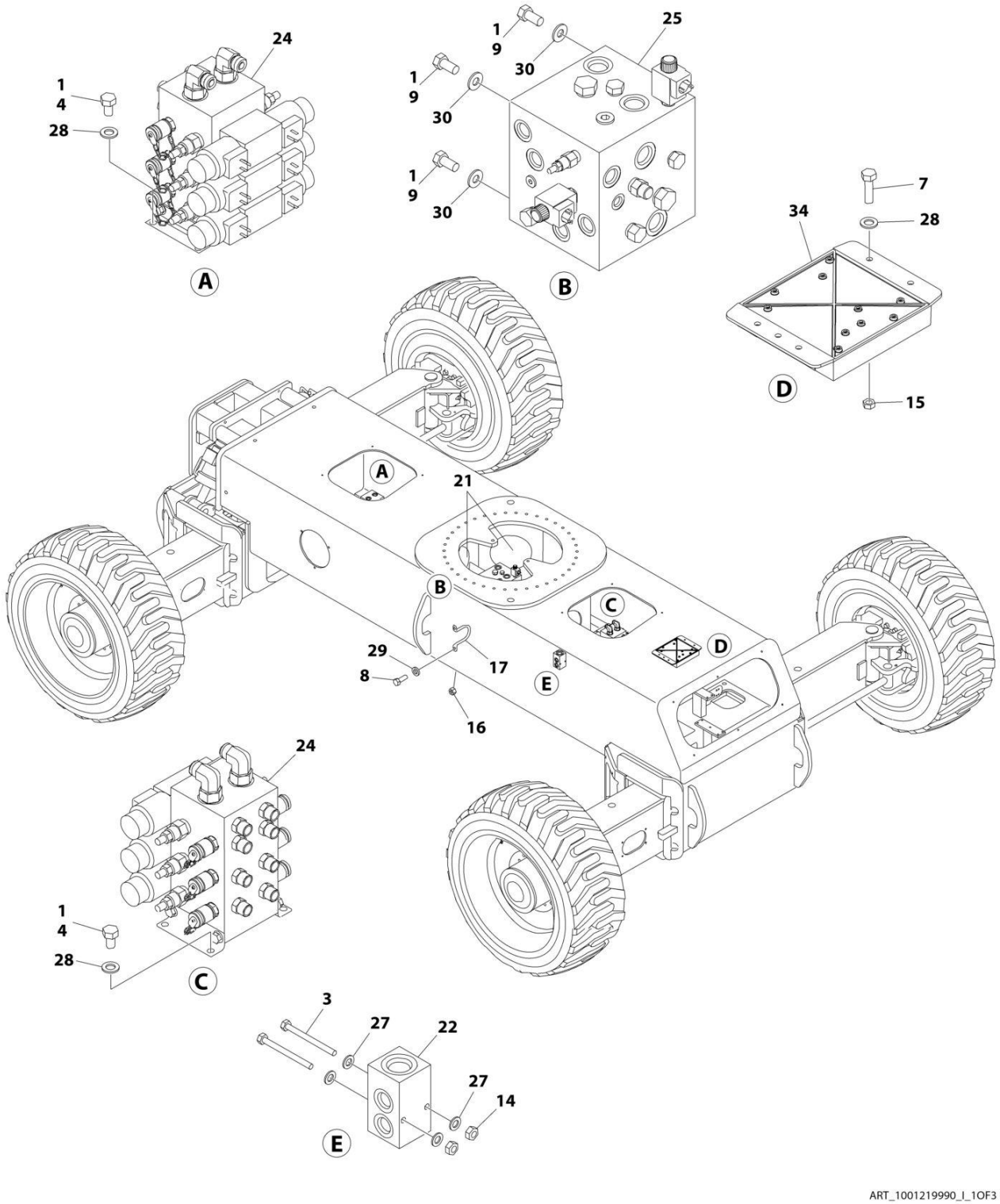

ART_1001219990_I_1OF3

FIGURE 1-15. FRAME VALVES INSTALLATION

ITEM	PART NUMBER	QTY	DESCRIPTION	REV
	1001219990	Ref	FRAME VALVES INSTALLATION - WITH 1 CELL LSS	I
1	0100011	AR	Compound, Locking	
3	0641424	2	Bolt 1/4 x 3	
4	0641504	8	Bolt 5/16 x 1/2	
7	0641509	4	Bolt 5/16 x 1-1/8	
8	0641608	4	Bolt 3/8 x 1	
9	0641808	4	Bolt 1/2 x 1	
14	3311405	2	Nut 1/4	
15	3311505	4	Nut 5/16	
16	3311605	4	Nut 3/8	
17	3841340	2	Loop, Hose	
21	4060808	11 ft /3.2 m	Flex-Trim	
22	4641155	1	Manifold, Junction	
24	4641268	2	Valve Assembly - Steer (See Separate Breakdown in this Section)	
25	4641454	1	Valve Assembly - Traction (See Separate Breakdown in this Section)	
27	4711400	4	Washer 1/4	
28	4711500	16	Washer 5/16	
29	4711600	2	Washer 3/8	
30	4711800	4	Washer 1/2	
34	1001306079	1	Module, Chassis (Note: Re-calibration Required when Replaced)	

FIGURE 1-16. STEER VALVE ASSEMBLY

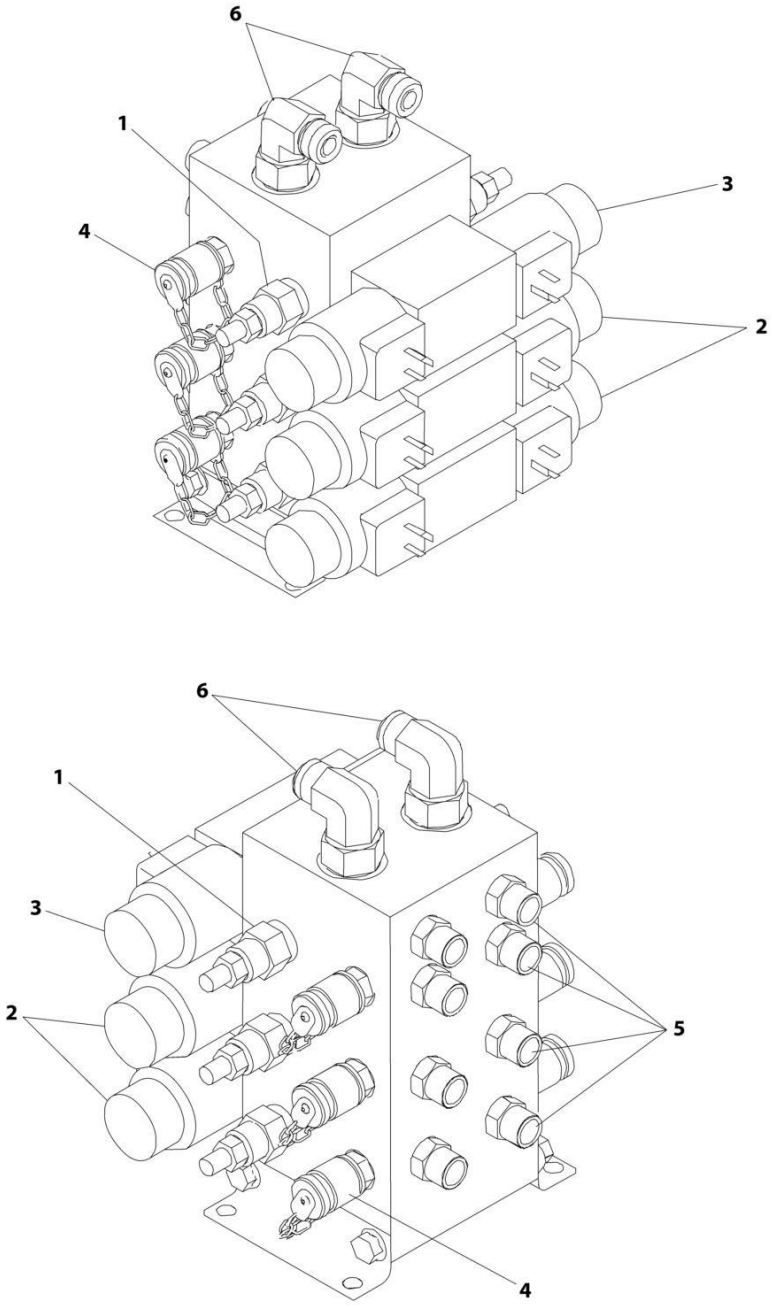

FIGURE 1-16. STEER VALVE ASSEMBLY

ITEM	PART NUMBER	QTY	DESCRIPTION	REV
	4641268	Ref	STEER VALVE ASSEMBLY	C
1	7026028	12	Cartridge (6 Per Valve)	
1	7011346	12	Seal Kit - Cartridge (1 Per Cartridge)	
2	7024927	4	Valve (2 Per Valve)	
2	7012773	4	Seal Kit - Cartridge (1 Per Cartridge)	
2	7018991	8	Coil (2 Per Valve)	
3	70001976	2	Valve (1 Per Valve)	
3	7012773	2	Seal Kit - Cartridge (1 Per Cartridge)	
3	7018991	4	Coil (2 Per Valve)	
3	70001939	2	Orifice	
4	2221086	6	Check, Pressure	
5	2110606	8	Fitting, Straight	
6	2130810	2	Fitting, 90	

FIGURE 1-17. TRACTION VALVE ASSEMBLY

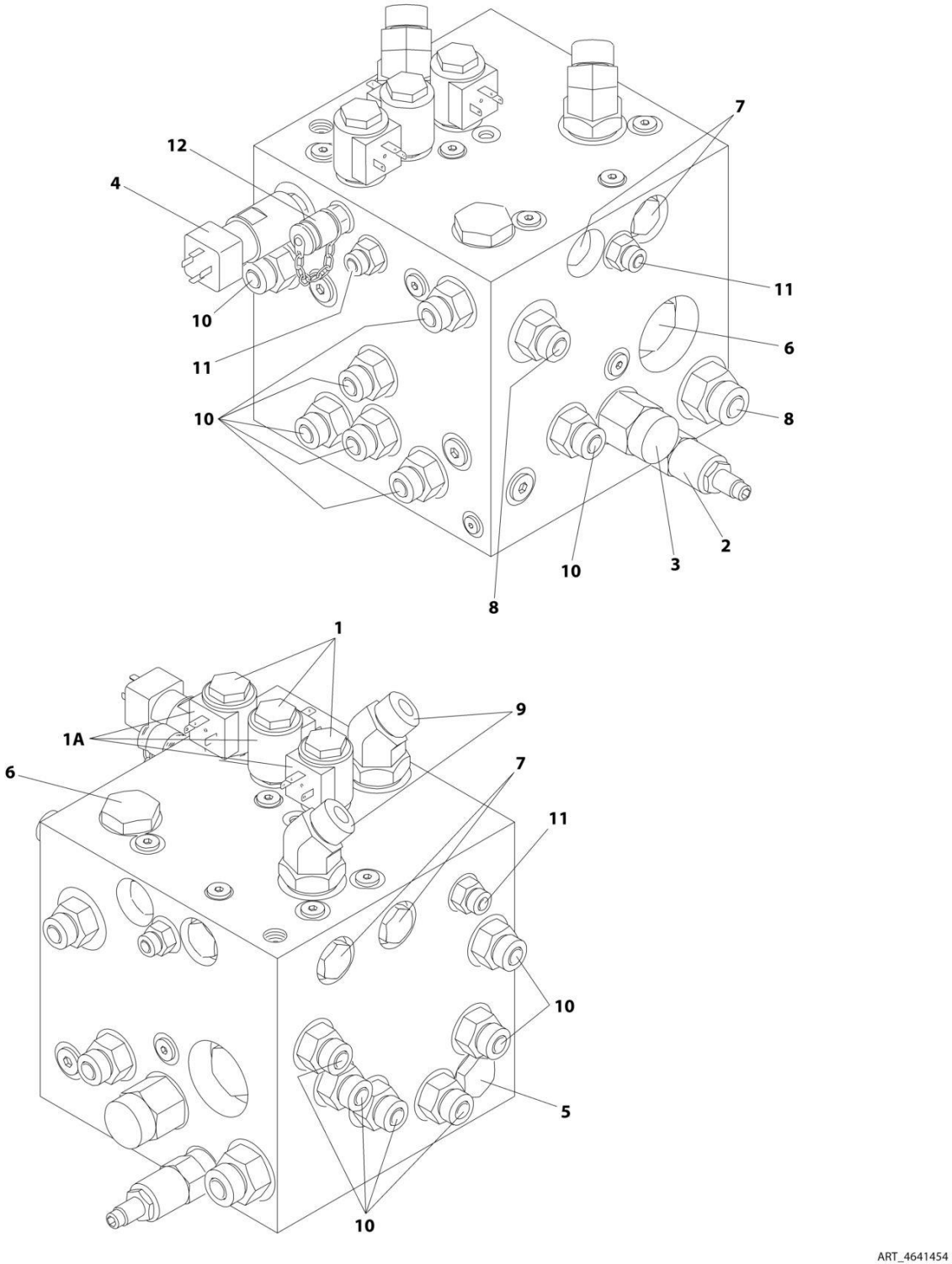

FIGURE 1-17. TRACTION VALVE ASSEMBLY

ITEM	PART NUMBER	QTY	DESCRIPTION	REV
	4641454	Ref	TRACTION VALVE ASSEMBLY	E
1	7012941	3	Cartridge, Valve (Steer, Brake and Axle Lockout)	
1	7010543	3	Seal Kit - 7012941 Cartridge	
1A	7012944	2	Coil	
2	70000801	1	Cartridge, Valve (Relief)	
2	7012998	1	Seal Kit - 70000801 Cartridge	
3	70000802	1	Cartridge, Valve (Pilot)	
3	7012942	1	Seal Kit - 70000802 Cartridge	
4	70000803	1	Pressure Switch	
5	70000804	1	Cartridge, Valve (Shuttle)	
5	70000805	1	Seal Kit - 70000804 Cartridge	
6	70000806	2	Cartridge, Valve (Flow Divider)	
6	7017405	2	Seal Kit - 70000806 Cartridge	
7	7012955	4	Cartridge, Valve (Check)	
7	7012967	4	Seal Kit - 7012955 Cartridge	
8	2111012	2	Fitting, Straight	
9	2151012	2	Fitting, 45	
10	2110810	13	Fitting, Straight	
11	2110406	3	Fitting, Straight	
12	2221086	1	Check, Pressure	
13	2220883	1	Plug, #4 (Not Shown)	

FIGURE 1-18. FRAME COVERS INSTALLATION - ABS

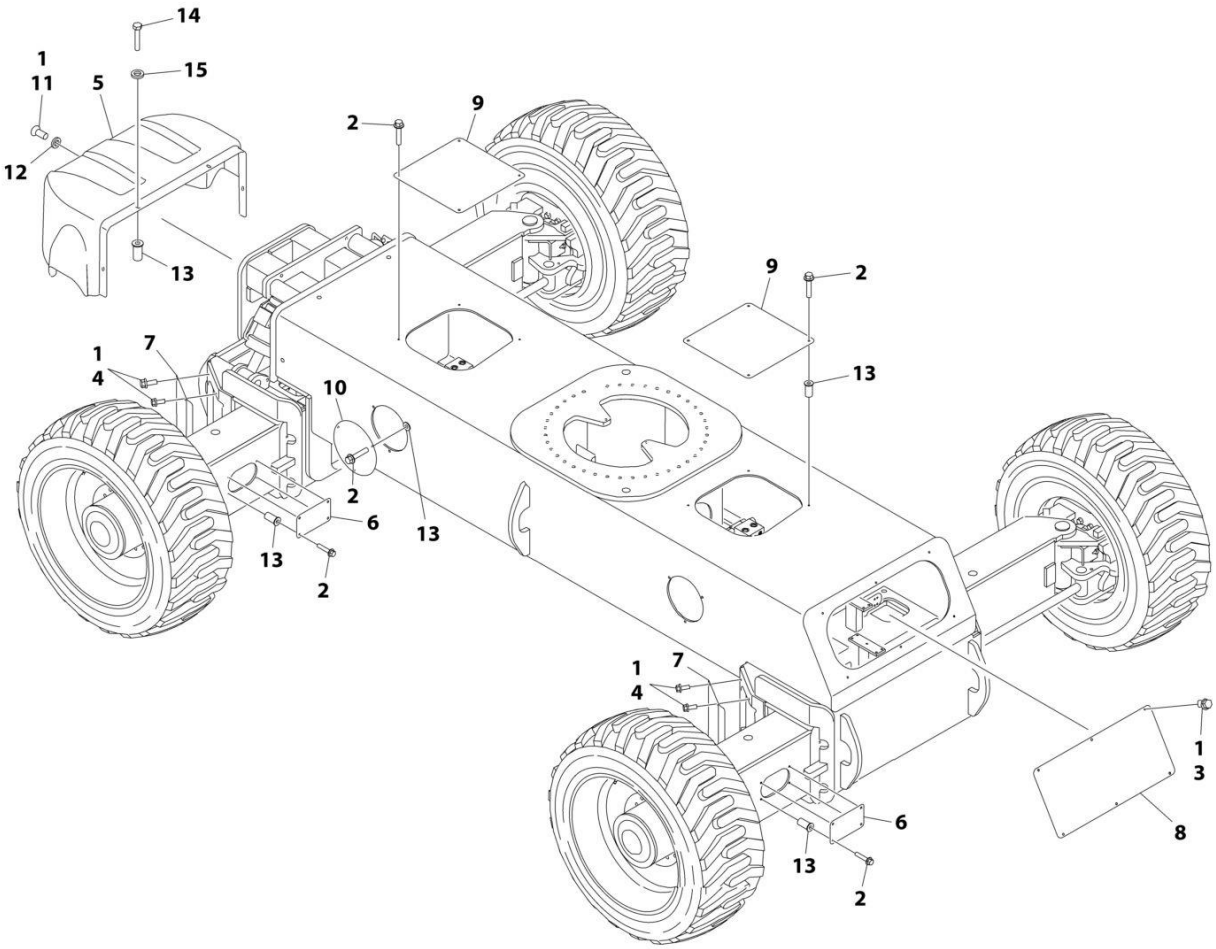

FIGURE 1-18. FRAME COVERS INSTALLATION - ABS

ITEM	PART NUMBER	QTY	DESCRIPTION	REV
	1001176346	Ref	FRAME COVERS INSTALLATION - ABS	C
1	0100011	AR	Compound, Locking	
2	0791410	36	Screw 1/4 x 1-1/4	
3	0791604	6	Screw 3/8 x 1/2	
4	0791607	16	Screw 3/8 x 7/8	
5	1670996	1	Cover, Front	
6	1671045	4	Plate, Cover (Axle Side)	
7	1671046	4	Plate, Cover (Axle Corner)	
8	1671047	1	Plate, Cover (Rear)	
9	1671048	2	Plate, Cover (Frame Top)	
10	1671049	4	Plate, Cover (Frame Side)	
11	3900283	3	Screw 3/8 x 3/4	
12	4751600	3	Washer 3/8	
13	8580420	40	Nut, Well	
14	0641412	4	Bolt 1/4 x 1-1/2	
15	4740430	4	Washer, Fender	

FIGURE 1-19. FRAME COVERS INSTALLATION - STEEL

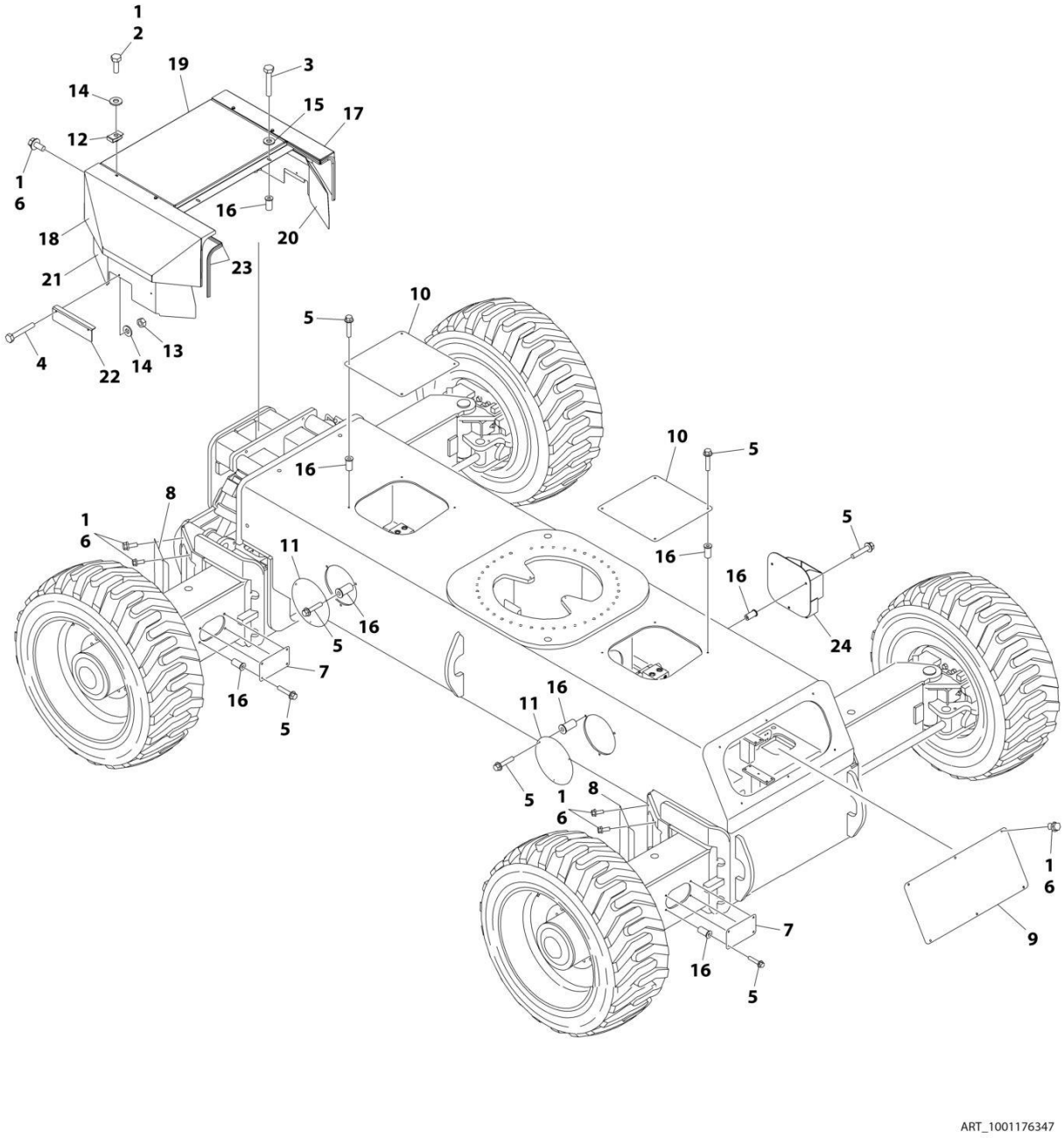

FIGURE 1-19. FRAME COVERS INSTALLATION - STEEL

ITEM	PART NUMBER	QTY	DESCRIPTION	REV
	1001176347	Ref	FRAME COVERS INSTALLATION (STEEL)	C
		Ref	Note: Only Available on ANSI, ANSI Export and Japanese Specs.	
1	0100011	AR	Compound, Locking	
2	0641406	8	Screw 1/4 x 3/4	
3	0641412	2	Bolt 1/4 x 1-1/2	
4	0641414	4	Screw 1/4 x 1-3/4	
5	0791410	36	Screw 1/4 x 1-1/4	
6	0791604	25	Screw 3/8 x 1/2	
7	1671045	4	Plate, Cover (Axle Side)	
8	1671046	4	Plate, Cover (Axle Corner)	
9	1671047	1	Plate, Cover (Rear)	
10	1671048	2	Plate, Cover (Frame Top)	
11	1671049	3	Plate, Cover (Frame Side)	
12	3300454	8	Nut 1/4	
13	3311405	4	Nut 1/4	
14	4711400	12	Washer 1/4	
15	4740430	2	Washer, Fender	
16	8580420	38	Nut, Well	
17	1001110108	1	Cover - RH Side	
18	1001110109	1	Cover - LH Side	
19	1001110110	1	Cover - Center Side	
20	1001110111	1	Shift - RH Side	
21	1001110112	1	Shift - LH Side	
22	1001110113	2	Plate	
23	1001110513	51 in /5.5m	Seal	
24	1001110877	1	Mount, Fire Extinguisher	

SECTION 2 - TURNTABLE

FIGURE 2-1. TURNTABLE VALVES INSTALLATION

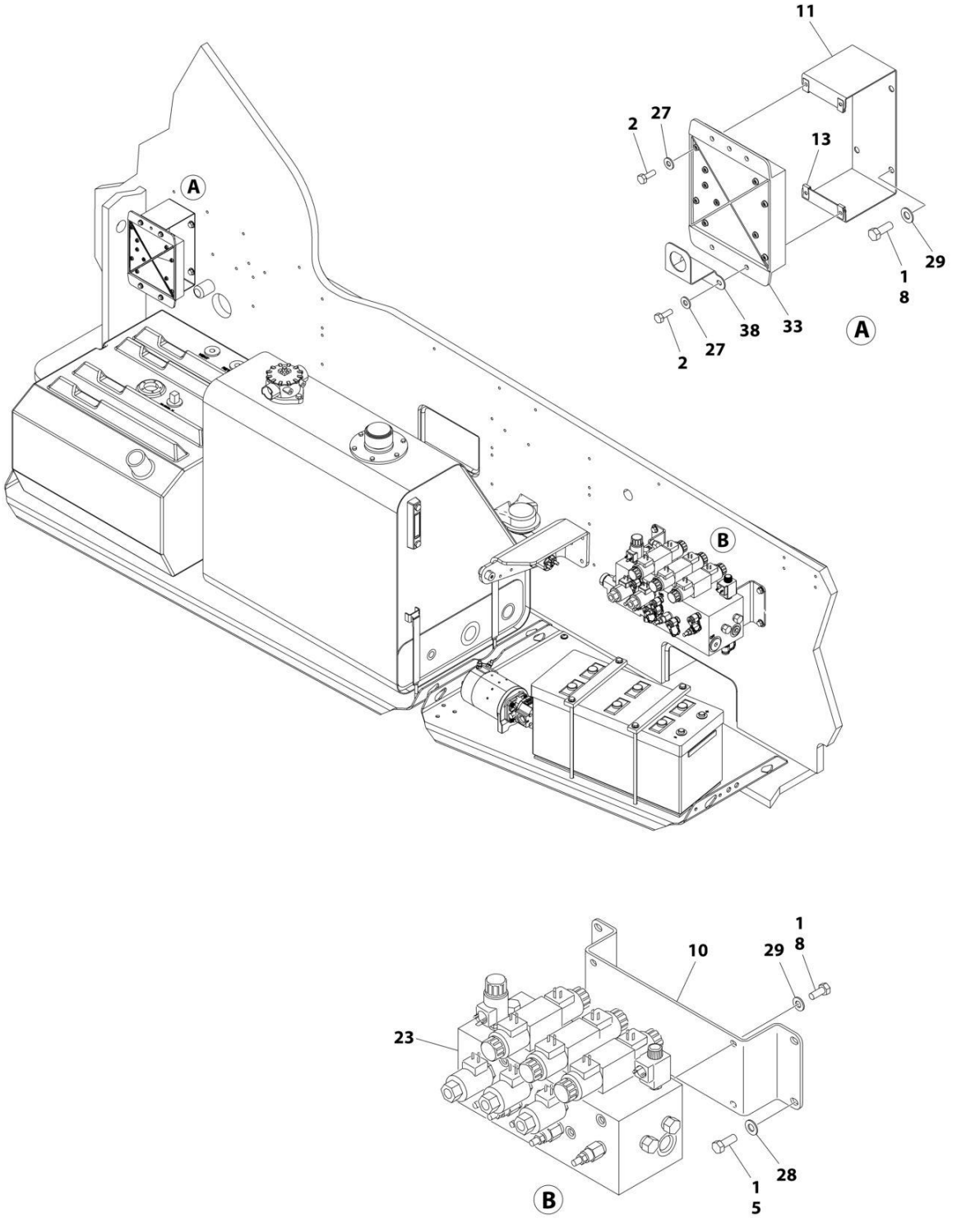

FIGURE 2-1. TURNTABLE VALVES INSTALLATION

ITEM	PART NUMBER	QTY	DESCRIPTION	REV
	1001219990	Ref	TURNTABLE VALVES INSTALLATION - WITH 1 CELL LSS	I
1	0100011	AR	Compound, Locking	
2	0641407	4	Bolt 1/4 x 7/8	
5	0641506	4	Bolt 5/16 x 3/4	
8	0641608	8	Bolt 3/8 x 1	
10	0902755	1	Bracket, Valve Mounting	
11	0902800	1	Bracket, Module Mounting	
13	3300454	1	Nut, Special	
23	1001270105	1	Main Valve Assembly (See Separate Breakdown in this Section)	
27	4711400	1	Washer 1/4	
28	4711500	1	Washer 5/16	
29	4711600	1	Washer 3/8	
33	1001306077	1	Module, B.L.A.M. (Note: Control System must be Re-calibrated when Module is Replaced)	
38	1001288370	1	Bracket	

FIGURE 2-2. BATTERY AND AUXILIARY PUMP INSTALLATION - ABS HOODS

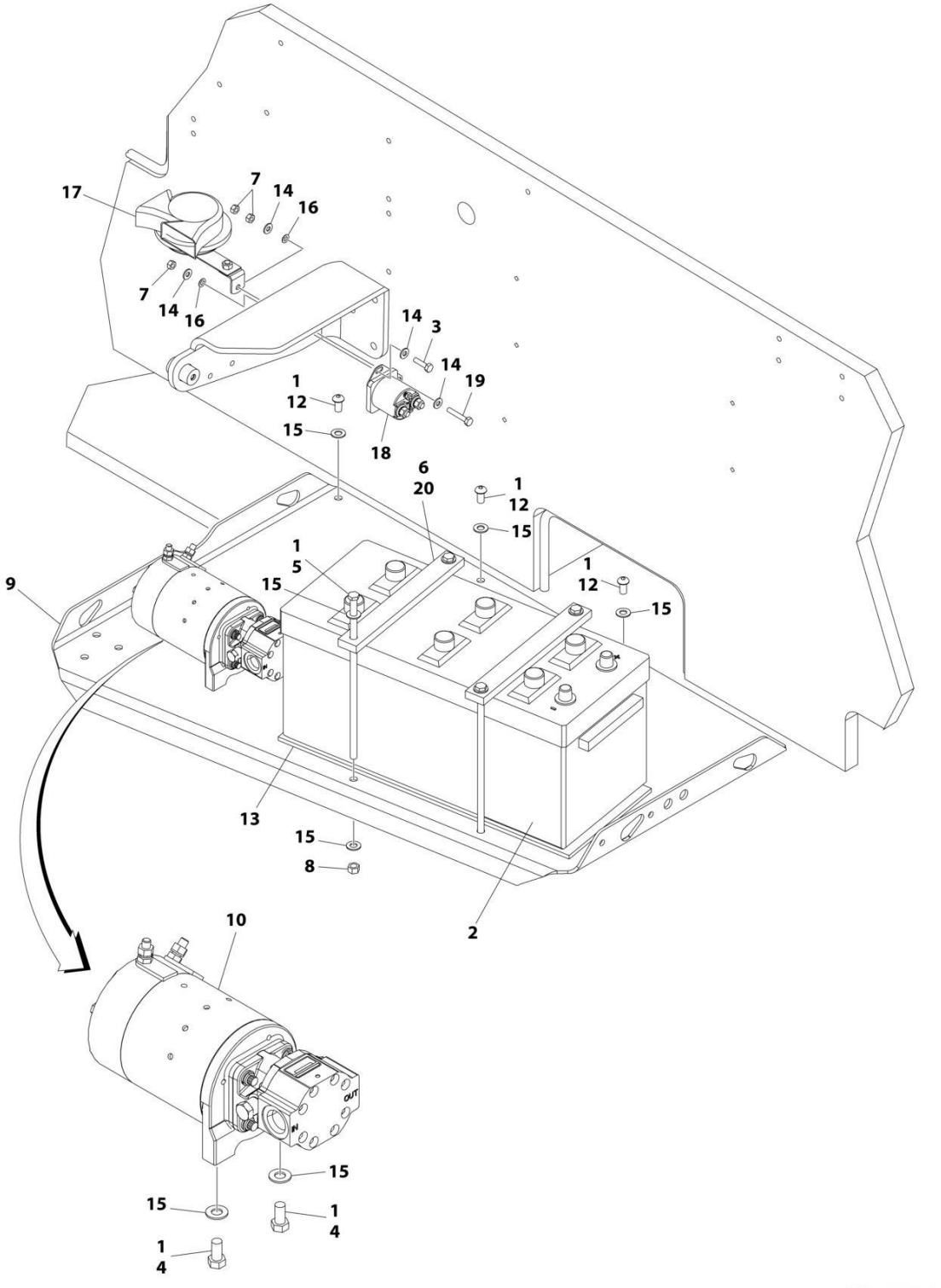

FIGURE 2-2. BATTERY AND AUXILIARY PUMP INSTALLATION - ABS HOODS

ITEM	PART NUMBER	QTY	DESCRIPTION	REV
	0271795	Ref	BATTERY AND AUXILIARY PUMP INSTALLATION - ABS HOODS	G
1	0100011	AR	Compound, Locking	
2	0400020	1	Battery	
3	0641408	1	Bolt 1/4 x 1	
4	0641606	2	Bolt 3/8 x 3/4	
5	0236768	4	Rod, Hold-down	
6	0363062	2	Bar, Battery	
7	3311405	3	Nut 1/4	
8	3311601	4	Nut 3/8	
9	3573259	1	Tray	
10	3600424	1	Auxiliary Pump Assembly (See Separate Breakdown in this Section)	
12	3900283	7	Screw 3/8 x 3/4	
13	3980006	1	Seat, Battery	
14	4711400	4	Washer 1/4	
15	4711600	17	Washer 3/8	
16	4791400	2	Starwasher 1/4	
17	0140001	1	Horn	
18	3740067	1	Relay	
19	0641412	1	Bolt 1/4 x 1-1/2	
20	4420037	17 in /43cm	Tape, Insulation	

FIGURE 2-3. BATTERY AND AUXILIARY PUMP INSTALLATION - STEEL HOODS

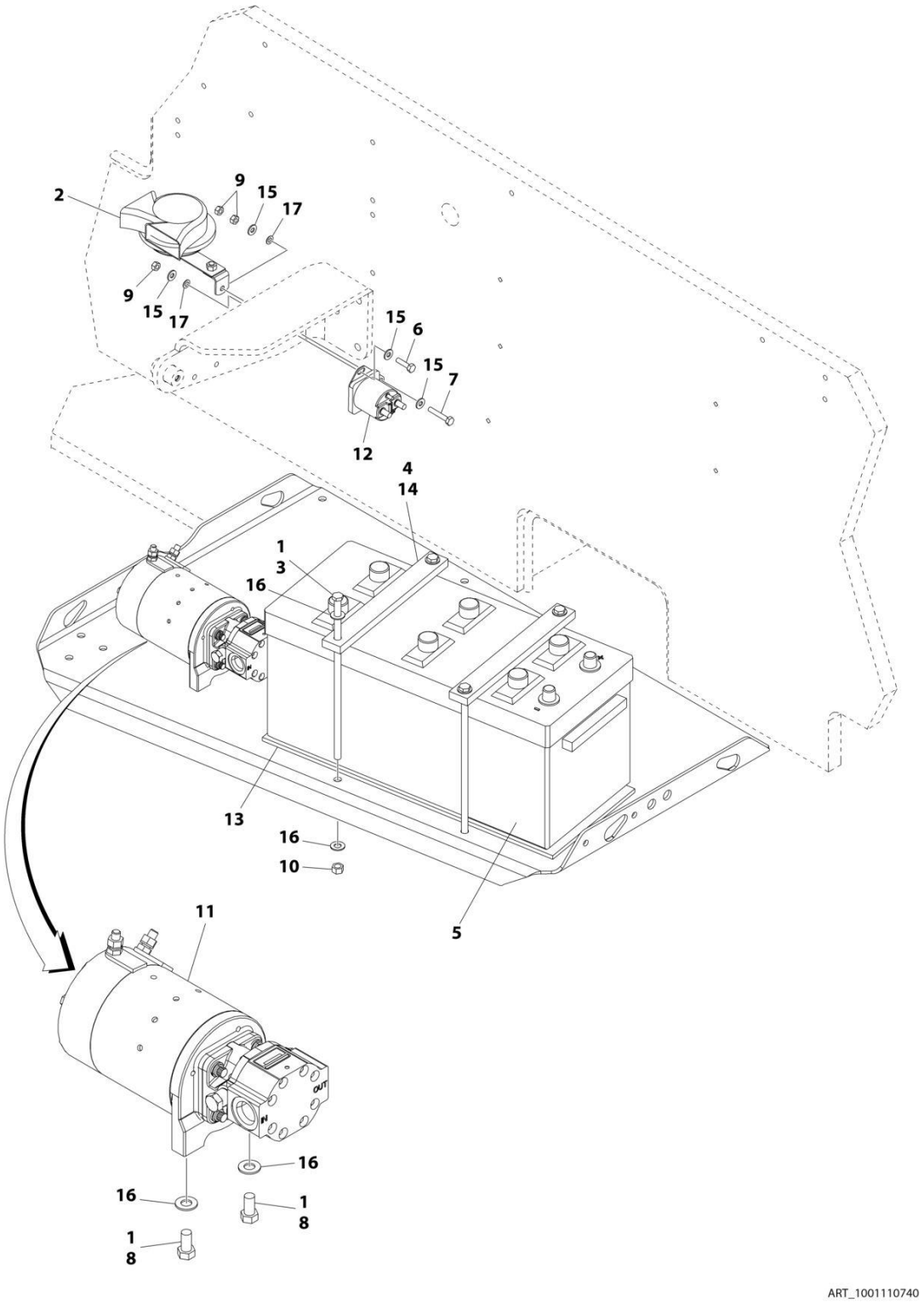

FIGURE 2-3. BATTERY AND AUXILIARY PUMP INSTALLATION - STEEL HOODS

ITEM	PART NUMBER	QTY	DESCRIPTION	REV
	1001110740	Ref	BATTERY AND AUXILIARY PUMP INSTALLATION – STEEL HOODS	A
1	0100011	AR	Compound, Locking	
2	0140001	1	Horn	
3	0236768	4	Rod, Hold-down	
4	0363062	2	Bar, Battery	
5	0400020	1	Battery	
6	0641408	1	Bolt 1/4 x 1	
7	0641412	1	Bolt 1/4 x 1-1/2	
8	0641606	2	Bolt 3/8 x 3/4	
9	3311405	3	Nut 1/4	
10	3311601	4	Nut 3/8	
11	3600424	1	Auxiliary Pump Assembly (See Separate Breakdown in this Section)	
12	3740067	1	Relay	
13	3980006	1	Seat, battery	
14	4420037	17 in /43cm	Tape, Insulation	
15	4711400	4	Washer 1/4	
16	4711600	10	Washer 3/8	
17	4791400	2	Starwasher 1/4	

FIGURE 2-4. AUXILIARY PUMP ASSEMBLY

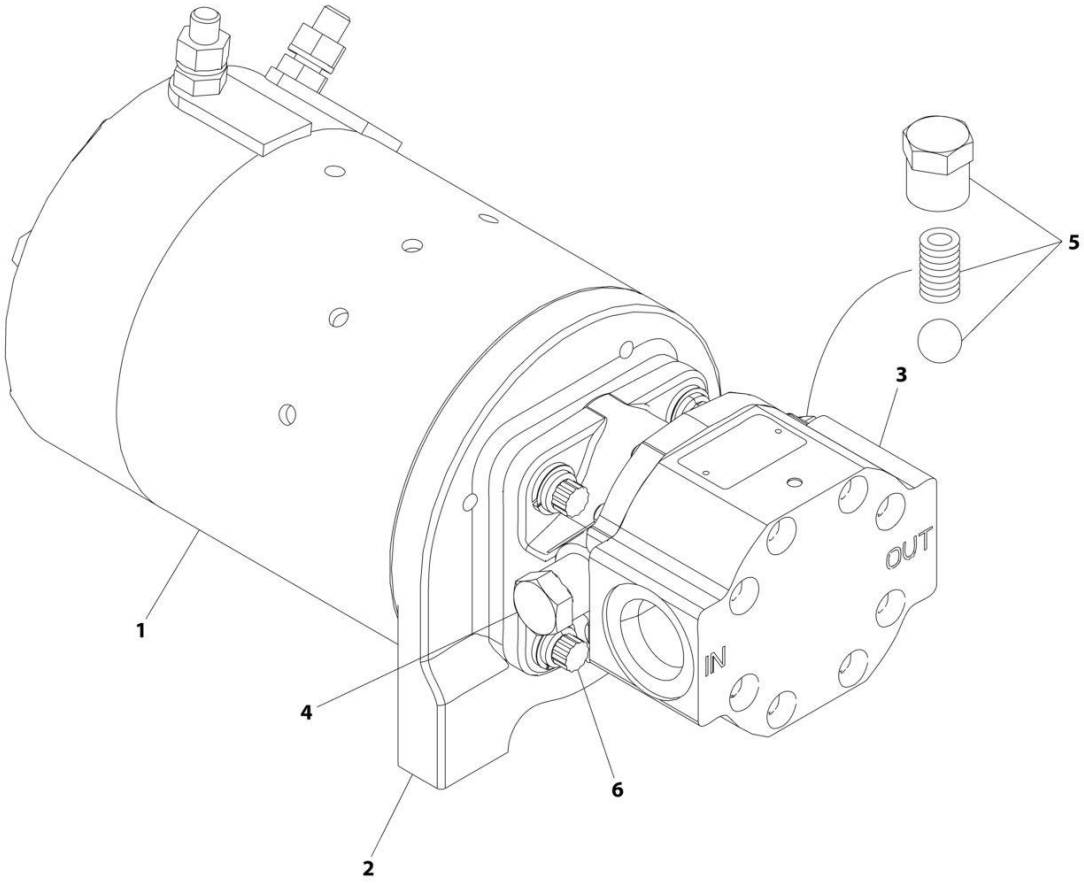

FIGURE 2-4. AUXILIARY PUMP ASSEMBLY

ITEM	PART NUMBER	QTY	DESCRIPTION	REV
	3600424	Ref	AUXILIARY PUMP ASSEMBLY	B
1	70001056	1	Motor Service Replacement Kit (Includes Motor, p/n 7011062 Adapter, p/n 7011016 Coupling and qty 2 Setscrews)	
1	See Note	1	Brush Kit (Note: Not Available For Purchase)	
2	7011062	1	Bracket, Motor/Pump (Part of Item 1)	
2	7011016	1	Coupling (Part of Items 1 & 3)	
2	7011044	1	Gasket (Part of Item 3)	
3	7029593	1	Pump Service Replacement Kit (Includes Pump, p/n 7011016 Coupling, qty 2 Gaskets and qty 4 each of Screws and Washers)	
3	See Note	1	Seal, Shaft (Note: Not Available For Purchase)	
4	7029593	1	Valve Components	
5	7029593	1	Valve Components	
6	7011048	4	Screw	
6	7011043	4	Washer	

FIGURE 2-5. MAIN VALVE ASSEMBLY

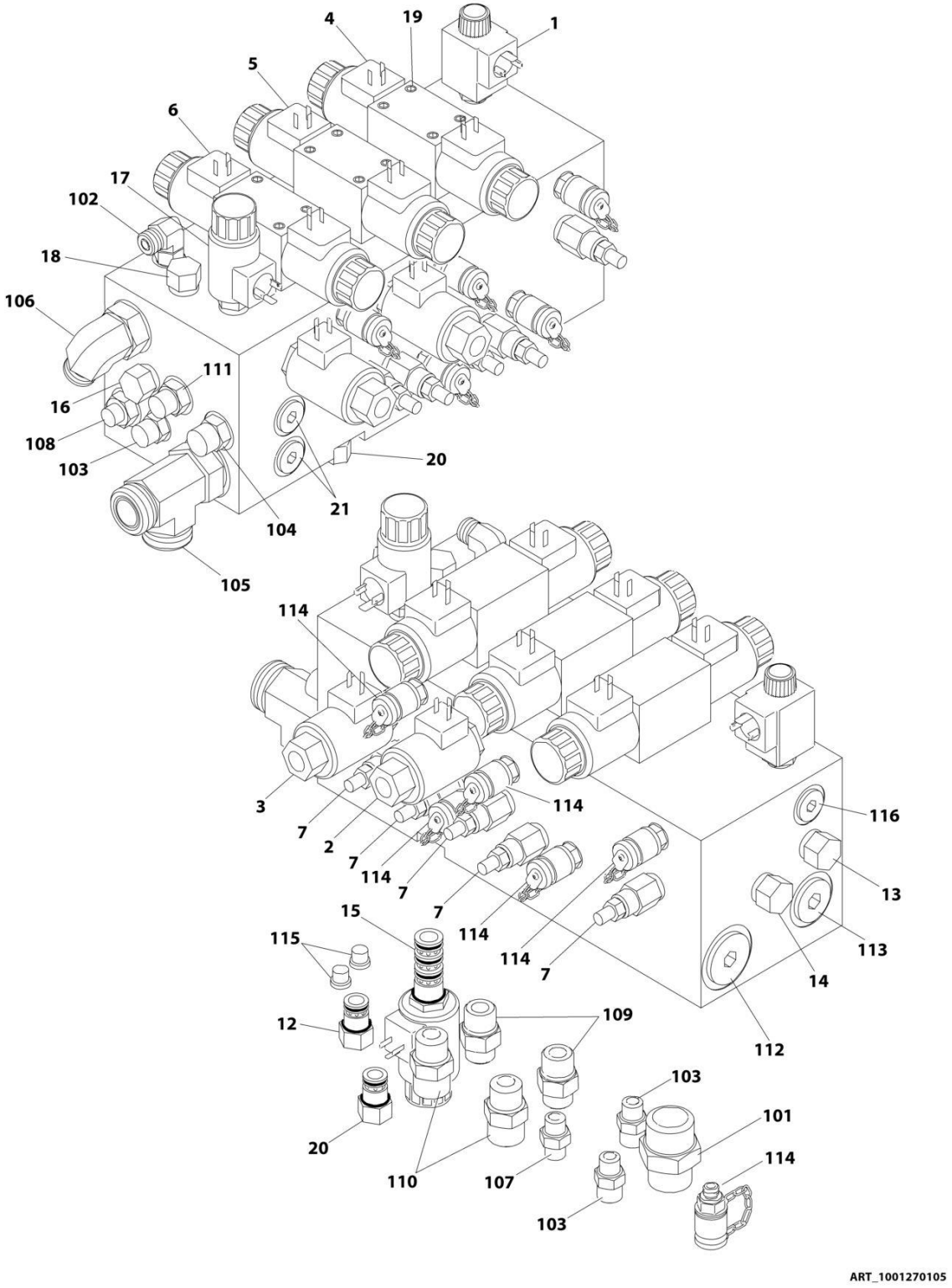

FIGURE 2-5. MAIN VALVE ASSEMBLY

ITEM	PART NUMBER	QTY	DESCRIPTION	REV
	1001270105	Ref	MAIN VALVE ASSEMBLY	B
1	7024573	1	Cartridge, Solenoid Valve (Dump)	
1	7024574	1	Seal Kit - Cartridge	
1	7011354	1	Coil	
2	7021636	1	Cartridge, Solenoid Valve (Lift Flow)	
2	7017495	1	Seal Kit - Cartridge	
2	7017451	1	Coil	
3	7021636	1	Cartridge, Solenoid Valve (Tele Flow)	
3	7017495	1	Seal Kit - Cartridge	
3	7017451	1	Coil	
4	7024924	1	Control Valve Assembly (Swing)	
4	7012773	1	Seal Kit - Valve	
4	7018991	2	Coil	
4	7021375	2	Nut, Coil	
5	7024925	1	Control Valve Assembly (Lift)	
5	7012773	1	Seal Kit - Valve	
5	7018991	2	Coil	
5	7021375	2	Nut, Coil	
6	70001976	1	Control Valve Assembly (Tele)	
6	7012773	1	Seal Kit - Valve	
6	7018991	2	Coil	
6	7021375	2	Nut, Coil	
7	7026007	5	Cartridge, Relief Valve (Swing/Lift Up/Lift Down/Tele In/Tele Out)	
7	7024574	1	Seal Kit - Cartridge	
12	7026000	1	Cartridge, Check Valve	
12	7011311	1	Seal Kit - Cartridge	
13	7026001	1	Cartridge, Check Valve	
13	7011311	1	Seal Kit - Cartridge	
14	7026002	1	Cartridge, Shuttle Valve	
14	2900770	1	Seal Kit - Cartridge	
15	7024570	1	Cartridge, Solenoid Valve (Aux Lift Down Select)	
15	70001930	1	Seal Kit - Cartridge	
15	7024571	1	Coil	
16	7026003	1	Cartridge, Pilot Valve	
16	7026004	1	Seal Kit - Cartridge	
17	7026005	1	Cartridge, Solenoid Valve (Aux Lift Down)	
17	7026006	1	Seal Kit - Cartridge	
17	7024571	1	Coil	
18	7026008	1	Cartridge, Check Valve	
18	7011346	1	Seal Kit - Cartridge	
19	7018942	12	Capscrew #10 x 2	
20	7026016	1	Cartridge, Valve	
20	7011346	1	Seal Kit - Cartridge	
21	70002759	1	Plug with O-Ring (Valve p/n 4641222 Only)	
	1001270105	Ref	Main Valve Assembly (Fitting Information)	A
101	2111216	1	Fitting, Straight	
102	2130606	1	Fitting, Elbow	
103	2110606	3	Fitting, Straight	
104	2110808	1	Fitting, Straight	
105	2170316	1	Fitting, Tee	

SECTION 2 - TURNTABLE

ITEM	PART NUMBER	QTY	DESCRIPTION	REV
106	2131012	1	Fitting, Elbow	
107	2110406	1	Fitting, Straight	
108	2110408	1	Fitting, Straight	
109	2110810	2	Fitting, Straight	
110	2111010	2	Fitting, Straight	
111	2110608	1	Fitting, Straight	
112	2220890	1	Plug	
113	70002760	1	Plug	
114	2221086	6	Check, Pressure	
115	70002758	2	Fitting, Plug	
116	70002759	1	Plug with O-Ring	

FIGURE 2-6. SWING DRIVE INSTALLATION

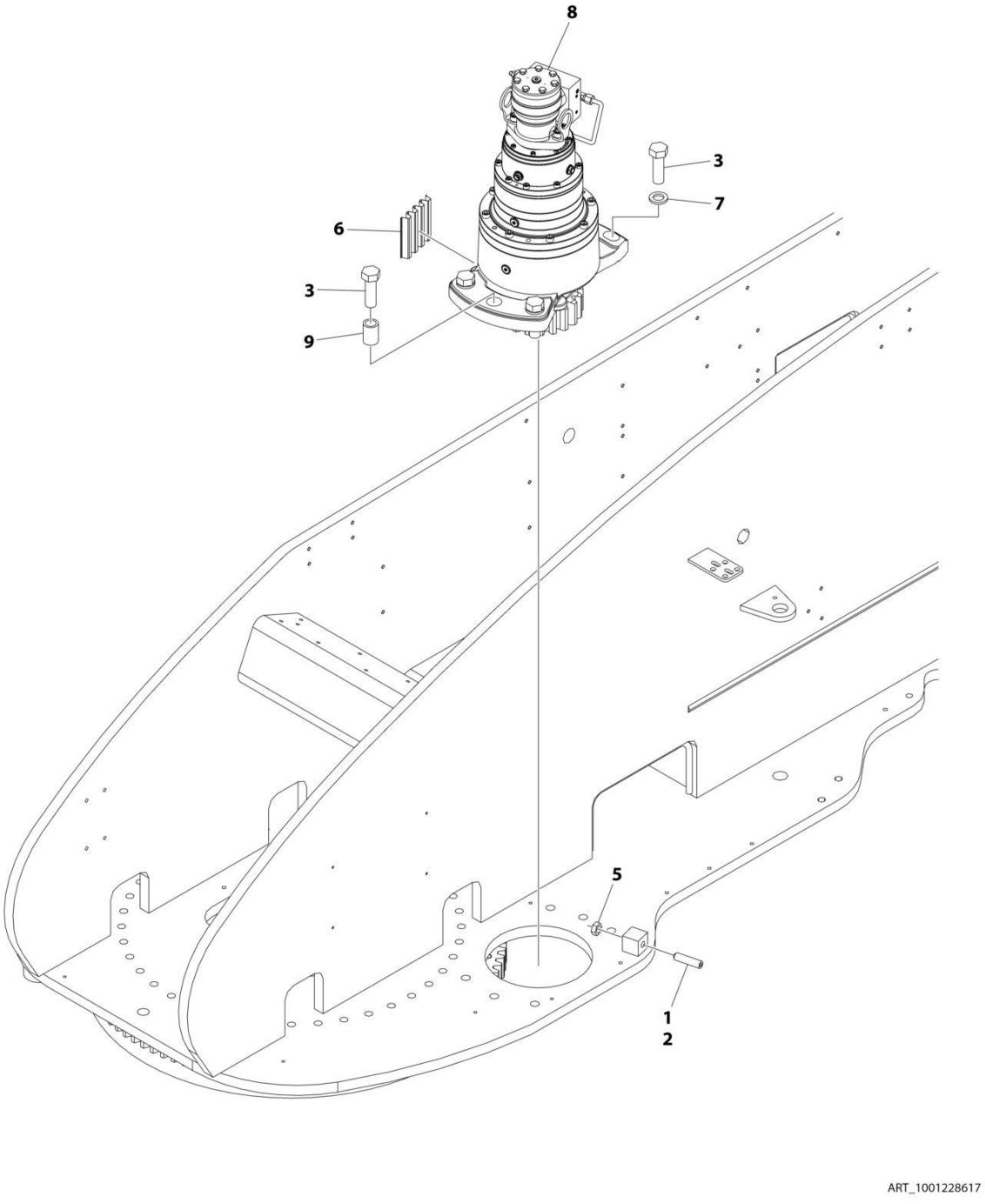

FIGURE 2-6. SWING DRIVE INSTALLATION

ITEM	PART NUMBER	QTY	DESCRIPTION	REV
	1001228617	Ref	SWING DRIVE INSTALLATION	E
1	0100019	AR	Compound, Locking	
2	3952020	1	Setscrew 5/8 x 2-1/2	
3	0682422	6	Bolt 7/8 x 2-3/4 Grade 8	
5	3312002	1	Nut 5/8	
6	4071041	1	Shim	
7	4892400	5	Washer 7/8	
8	1001228488	1	Swing Motor/Hub Assembly (See Separate Breakdown in this Section)	
9	1001229058	1	Sleeve	

FIGURE 2-7. TURNTABLE BEARING AND LUBE INSTALLATION

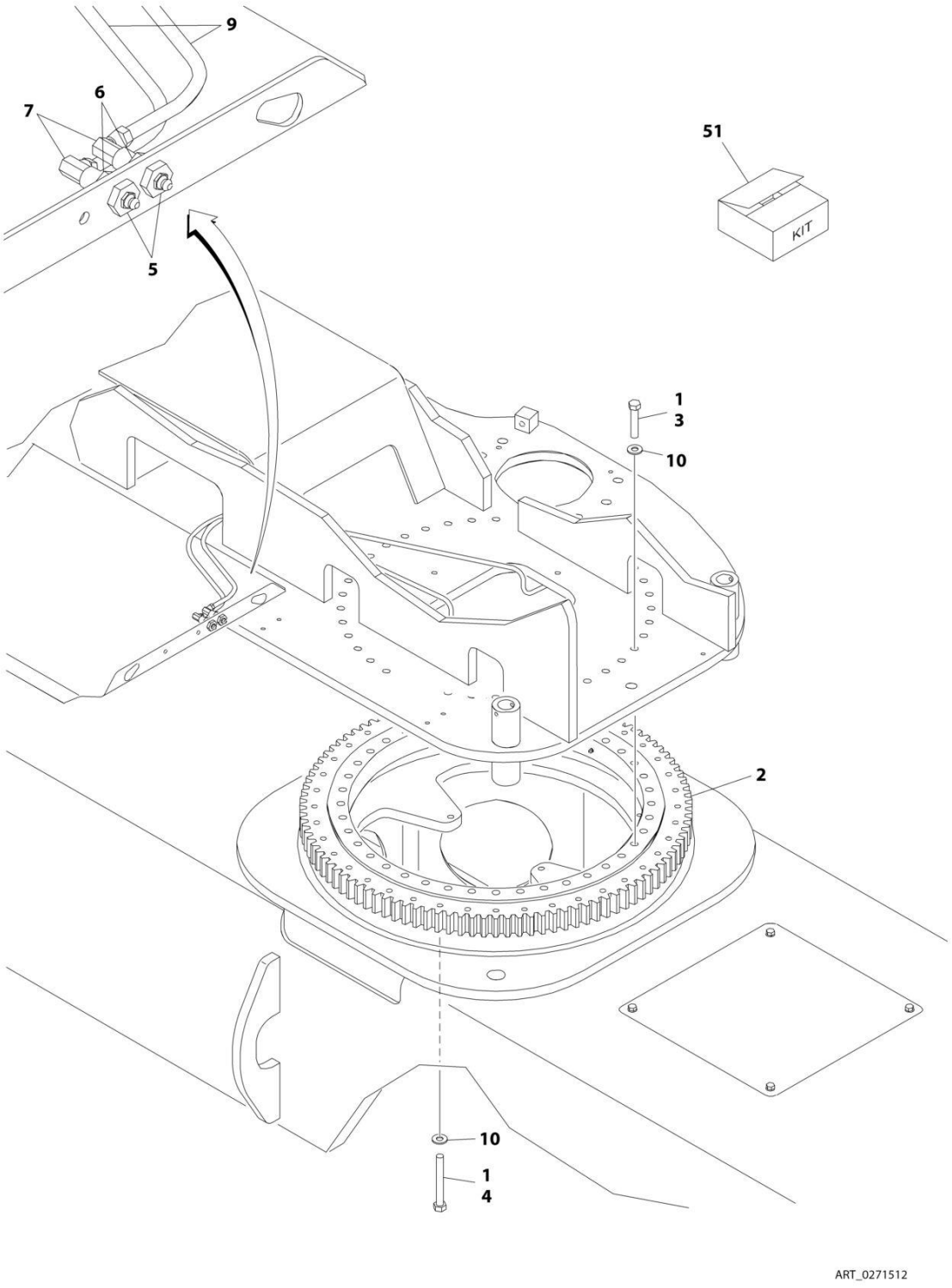

FIGURE 2-7. TURNTABLE BEARING AND LUBE INSTALLATION

ITEM	PART NUMBER	QTY	DESCRIPTION	REV
	0271512	Ref	TURNTABLE BEARING AND LUBE INSTALLATION	B
1	0100019	AR	Compound, Locking	
2	0440251	1	Bearing, Turntable	
3	0682026	40	Bolt 5/8 x 3-1/4 Grade 8	
4	0682040	40	Bolt 5/8 x 5 Grade 8	
5	2160002	2	Fitting, Grease	
6	2180344	2	Fitting, Bulkhead	
7	2220063	2	Fitting, Adapter	
9	2750528	2	Hose	
10	4892000	80	Washer 5/8	
51	2915072	1	Bearing Kit (Includes Items 2, 3, 4 & 10)	

FIGURE 2-8. TURNTABLE LOCK INSTALLATION

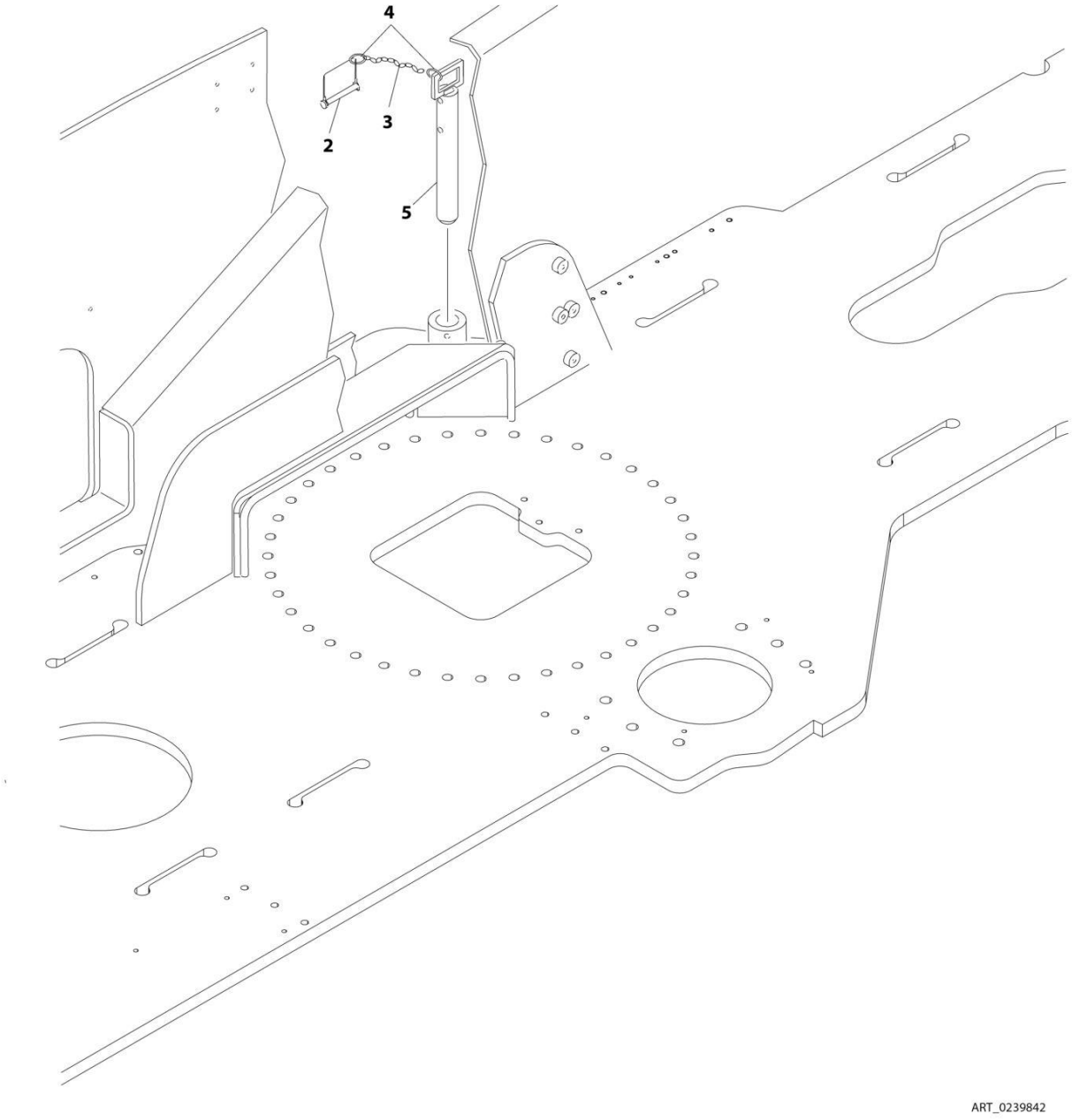

FIGURE 2-8. TURNTABLE LOCK INSTALLATION

ITEM	PART NUMBER	QTY	DESCRIPTION	REV
	0239842	Ref	TURNTABLE LOCK INSTALLATION	B
2	3421565	1	Pin, Snap	
3	1260017	9 in/23cm	Chain - #3	
4	3760170	2	Ring, Quick Release	
5	3421563	1	Pin, Turntable Lock	

FIGURE 2-9. PINION SHIELD INSTALLATION

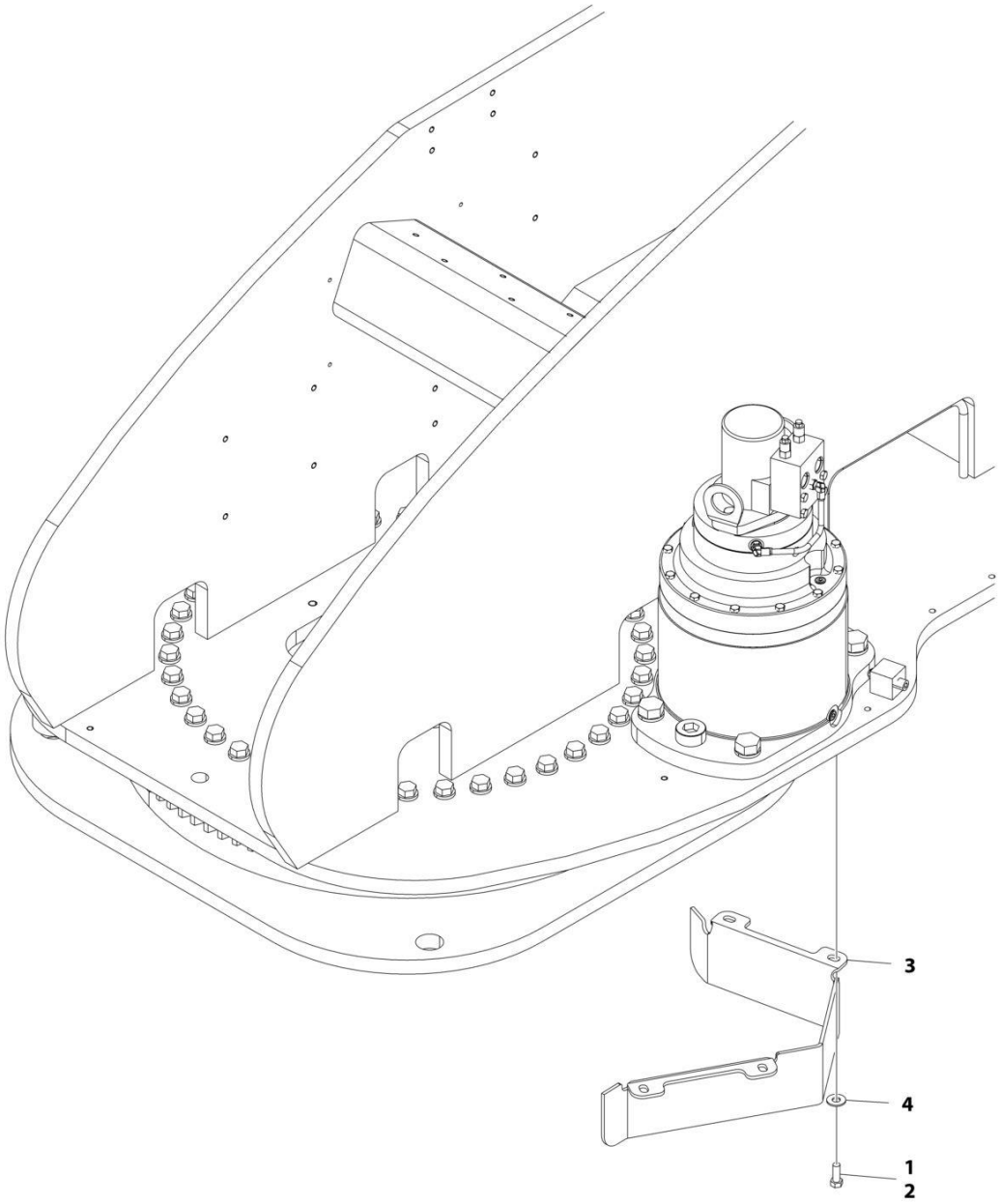

FIGURE 2-9. PINION SHIELD INSTALLATION

ITEM	PART NUMBER	QTY	DESCRIPTION	REV
	0271874	Ref	PINION SHIELD INSTALLATION	A
1	0100011	AR	Compound, Locking	
2	0641608	4	Bolt 3/8 x 1	
3	3573355	1	Plate, Pinion	
4	4751600	4	Washer 3/8	

FIGURE 2-10. EXTREME HOSTILE PACKAGE INSTALLATION (OPTIONAL)

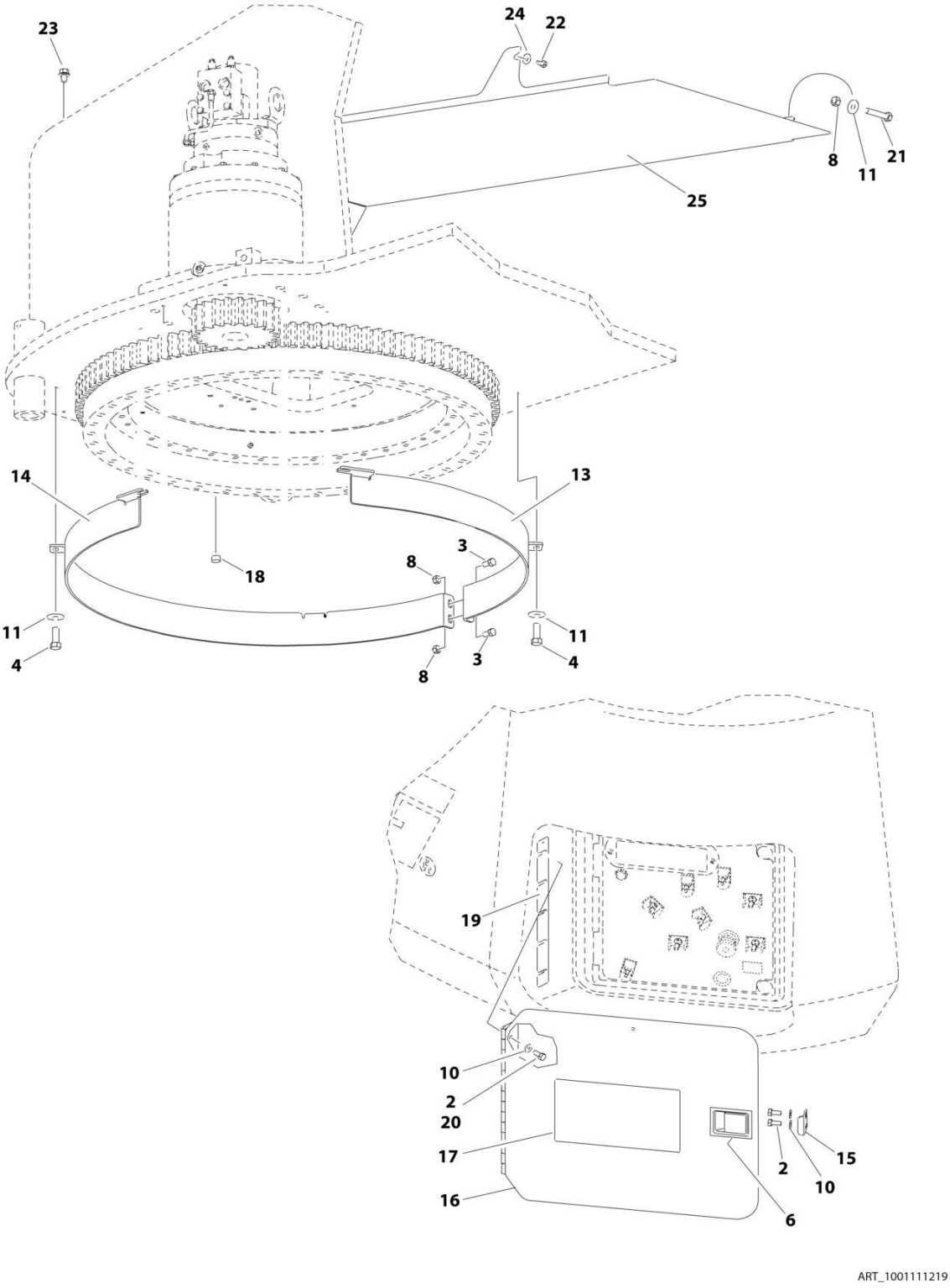

FIGURE 2-10. EXTREME HOSTILE PACKAGE INSTALLATION (OPTIONAL)

ITEM	PART NUMBER	QTY	DESCRIPTION	REV
	1001111219	Ref	EXTREME HOSTILE PACKAGE INSTALLATION (OPTIONAL)	G
2	0641506	5	Bolt 5/16 x 3/4	
3	0641606	2	Bolt 3/8 x 3/4	
4	0641608	3	Bolt 3/8 x 1	
6	2940045	1	Latch, Paddle	
8	3311605	AR	Nut 3/8	
10	4711500	7	Washer 5/16	
11	4751600	AR	Washer 3/8	
12	1001110940	1	Filter, Hydraulic Tank (Not Shown)	
13	1001111175	1	Plate, Bearing Cover	
14	1001111176	1	Plate, Bearing Cover	
15	1001112911	1	Plate, Striker	
16	1001111193	1	Door	
17	1001113173	1	Decal - Emergency Stop	
18	1001114392	1	Plug, Rubber	
19	1001115168	1	Shim	
20	0100011	AR	Compound, Locking	
21	0630511	1	Bolt 3/8 x 2	
22	0641404	1	Bolt 1/4 x 1/2	
23	0791604	2	Bolt 3/8 x 1/2	
24	4751400	1	Washer 1/4	
25	1001115440	1	Shield, Turntable	

FIGURE 2-11. SWING MOTOR/HUB ASSEMBLY

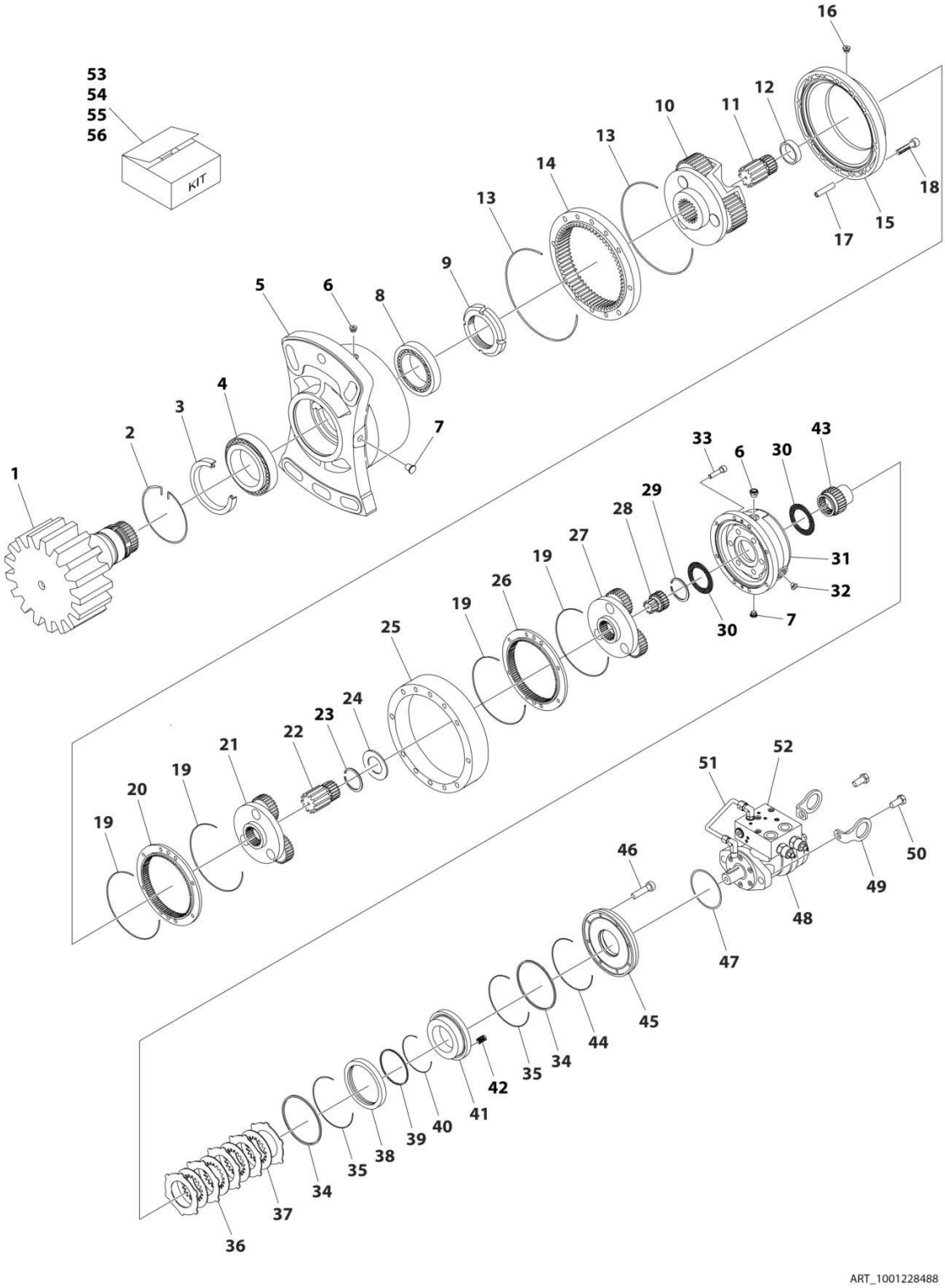

FIGURE 2-11. SWING MOTOR/HUB ASSEMBLY

ITEM	PART NUMBER	QTY	DESCRIPTION	REV
	1001228488	Ref	SWING MOTOR/HUB ASSEMBLY	B
1	See Note	NSS	Shaft (Note: Use Item 56)	
2	70004467	1	Ring	
3	See Note	NSS	Seal, Oil (Note: Use Item 53)	
4	See Note	NSS	Bearing (Note: Use Item 55)	
5	See Note	NSS	Support, Output (Note: Not Available for Purchase)	
6	70002057	5	Plug with O-Ring	
7	70004469	2	Plug with O-Ring	
8	See Note	NSS	Bearing (Note: Use Item 55)	
9	See Note	NSS	Nut, Ring (Note: Use Item 56)	
10	70006986	1	Reduction, Gear - Complete	
11	70006987	1	Pinion	
12	70004477	1	Spacer	
13	See Note	NSS	O-Ring (Note: Use Item 53)	
14	70004474	1	Ring, Planetary	
15	70006988	1	Spacer	
16	70002057	2	Plug with O-Ring	
17	70006989	4	Pin, Spring	
18	70004480	8	Capscrew M10 x 55	
19	See Note	NSS	O-Ring (Note: Use Item 53)	
20	70006990	1	Ring, Planetary	
21	70006991	1	Reduction, Gear - Complete	
22	70006992	1	Pinion	
23	70002032	1	Ring	
24	70006993	1	Spacer	
25	70006994	1	Spacer	
26	70004481	1	Ring, Planetary	
27	70006995	1	Reduction, Gear - Complete	
28	70006996	1	Pinion	
29	70006997	1	Ring	
30	70006998	2	Washer	
31	See Note	NSS	Housing, Brake (Note: Not Available for Purchase)	
32	70006999	1	Plug	
33	70007000	8	Capscrew M8 x 90	
34	See Note	NSS	Seal (Note: Use Item 53 or 54)	
35	See Note	NSS	O-Ring (Note: Use Item 53 or 54)	
36	See Note	NSS	Disc, Steel (Note: Use Item 54)	
37	See Note	NSS	Disc (Note: Use Item 54)	
38	70005317	1	Spacer	
39	See Note	NSS	Seal (Note: Use Item 53 or 54)	
40	See Note	NSS	O-Ring (Note: Use Item 53 or 54)	
41	70005318	1	Piston, Brake	
42	See Note	NSS	Spring, Brake (Note: Use Item 54)	
43	70007001	1	Shaft, Input	
44	See Note	NSS	O-Ring (Note: Use Item 53 or 54)	
45	70007002	1	Cover	
46	70007003	8	Screw M6 x 25	
47	See Note	NSS	O-Ring (Note: Use Item 53)	
48	70007009	1	Motor	
48	70007011	1	Seal Kit	

SECTION 2 - TURNTABLE

ITEM	PART NUMBER	QTY	DESCRIPTION	REV
49	See Note	NSS	Lug, Lifting (Note: Not Available for Purchase)	
50	70004494	2	Capscrew M12 x 35	
51	70007004	1	Brake, Valve Adapter	
52	70007010	1	Valve	
52	70007012	1	Seal Kit	
52	70007013	1	Hardware Kit	
53	70007005	1	Seal Kit – Brake and Hub (Includes Items 3, 13, 19, 34, 35, 39, 40, 44 & 47)	
54	70007006	1	Seal Kit – Brake (Includes Items 34-37, 39, 40, 42 & 44)	
55	70007007	1	Bearing Kit (Includes Items 4 & 8)	
56	70007008	1	Output Shaft Kit (Includes Items 1 & 9)	

FIGURE 2-12. ROTARY COUPLING AND COLLECTOR RING INSTALLATION (ROTARY COUPLING WITH SN PLATE)

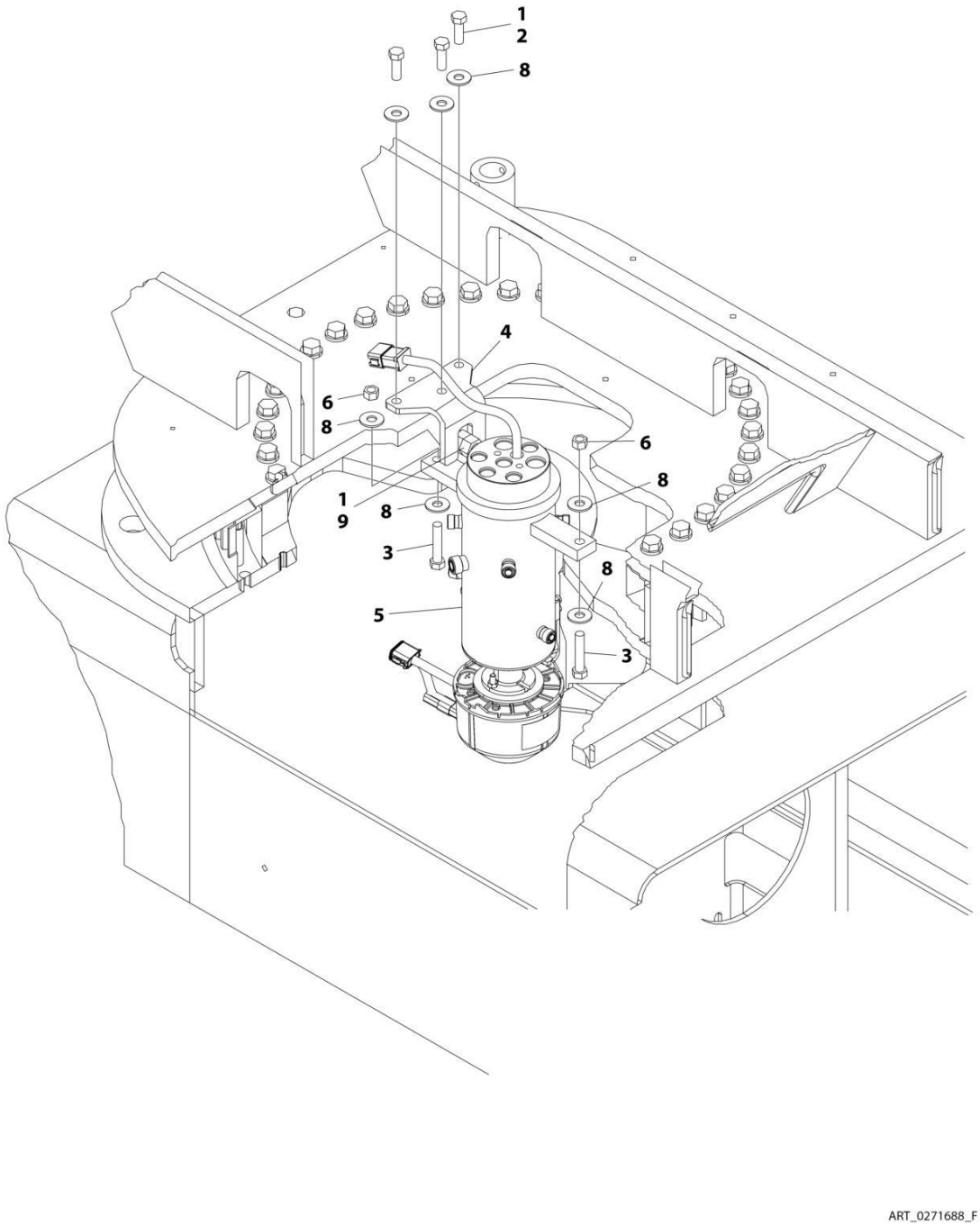

FIGURE 2-12. ROTARY COUPLING AND COLLECTOR RING INSTALLATION (ROTARY COUPLING WITH SN PLATE)

ITEM	PART NUMBER	QTY	DESCRIPTION	REV
	0271688	Ref	ROTARY COUPLING AND COLLECTOR RING INSTALLATION	F
1	0100011	AR	Compound, Locking	
2	0641812	3	Bolt 1/2 x 1-1/2	
3	0641820	2	Bolt 1/2 x 2-1/2	
4	0902915	1	Bracket, Swivel	
5	1001278607	1	Rotary Coupling and Collector Ring Assembly (See Separate Breakdown in this Section)	
6	3311805	2	Nut 1/2	
8	4751800	7	Washer 1/2	
9	3322201	2	Nut 3/4	

FIGURE 2-13. ROTARY COUPLING AND COLLECTOR RING ASSEMBLY

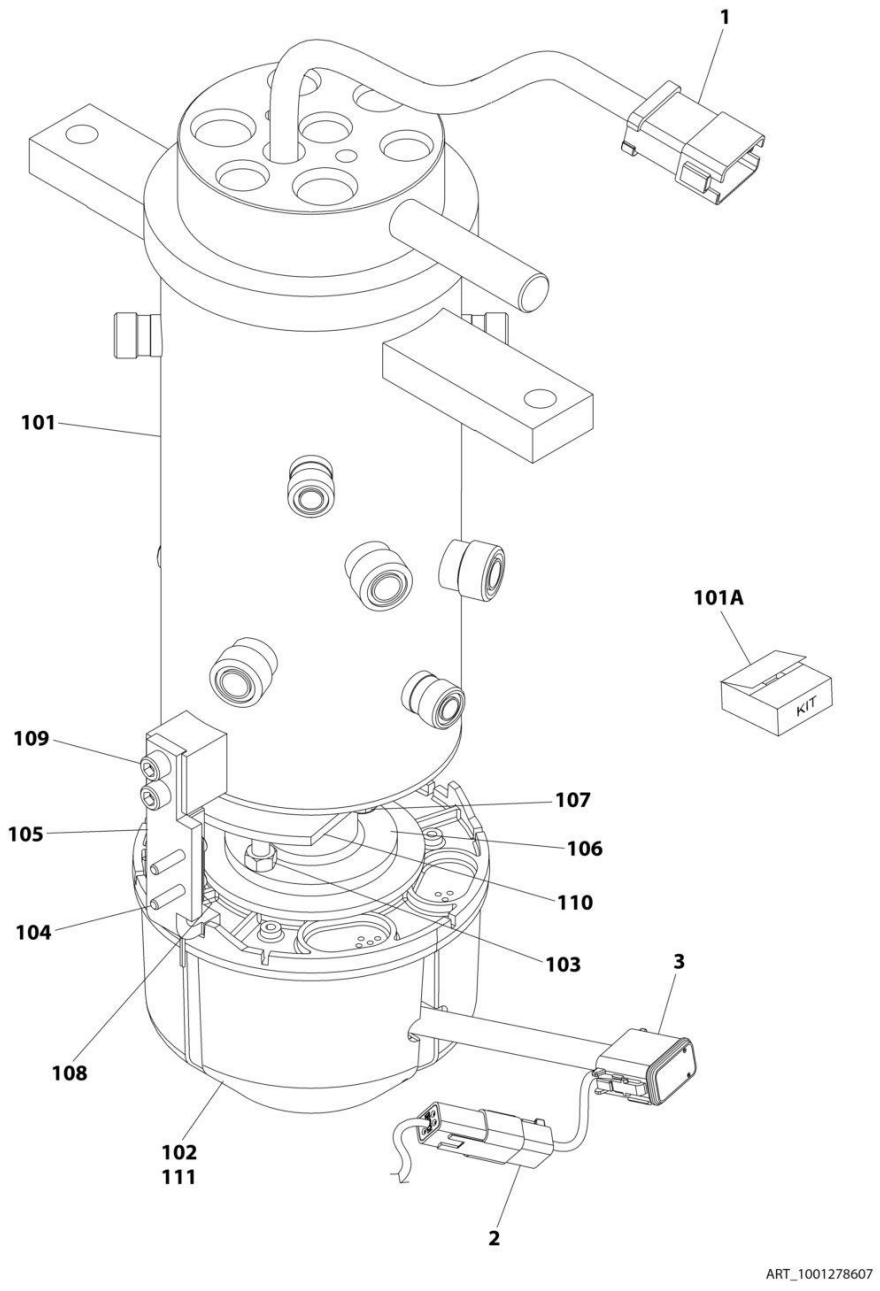

FIGURE 2-13. ROTARY COUPLING AND COLLECTOR RING ASSEMBLY

ITEM	PART NUMBER	QTY	DESCRIPTION	REV
	1001278607	Ref	ROTARY COUPLING AND COLLECTOR RING ASSEMBLY	A
1	4460950	1	Connector	
1	80363179	1	Wedge Lock	
2	4460884	1	Connector	
2	80604021	1	Wedge Lock	
3	4460836	1	Connector	
3	80604016	1	Wedge Lock	
3	4460944	3	Socket, Female (Gold)	
3	4640465	7	Socket, Female	
3	4460466	2	Seal, Plug	
101	70001102	1	Rotary Coupling Assembly	
101A	70001101	1	Seal Kit - 70001102 Coupling	
102	70008359	1	Collector Ring Assembly	
103	70008360	2	Nut 5/16	
104	70007510	2	Capscrew #10 x 1/2	
105	70008361	1	Arm	
106	70008362	1	Adaptor, Spool	
107	70008363	2	Bolt 5/16 x 1	
108	70008364	1	Sensor	
109	3931512	2	Capscrew 5/16 x 3/4	
110	70008365	1	Plate, Cam	
111	0100048	AR	Silicone	

FIGURE 2-14. ROTARY COUPLING AND COLLECTOR RING INSTALLATION (MACHINES WITH SN STARTING WITH B3)

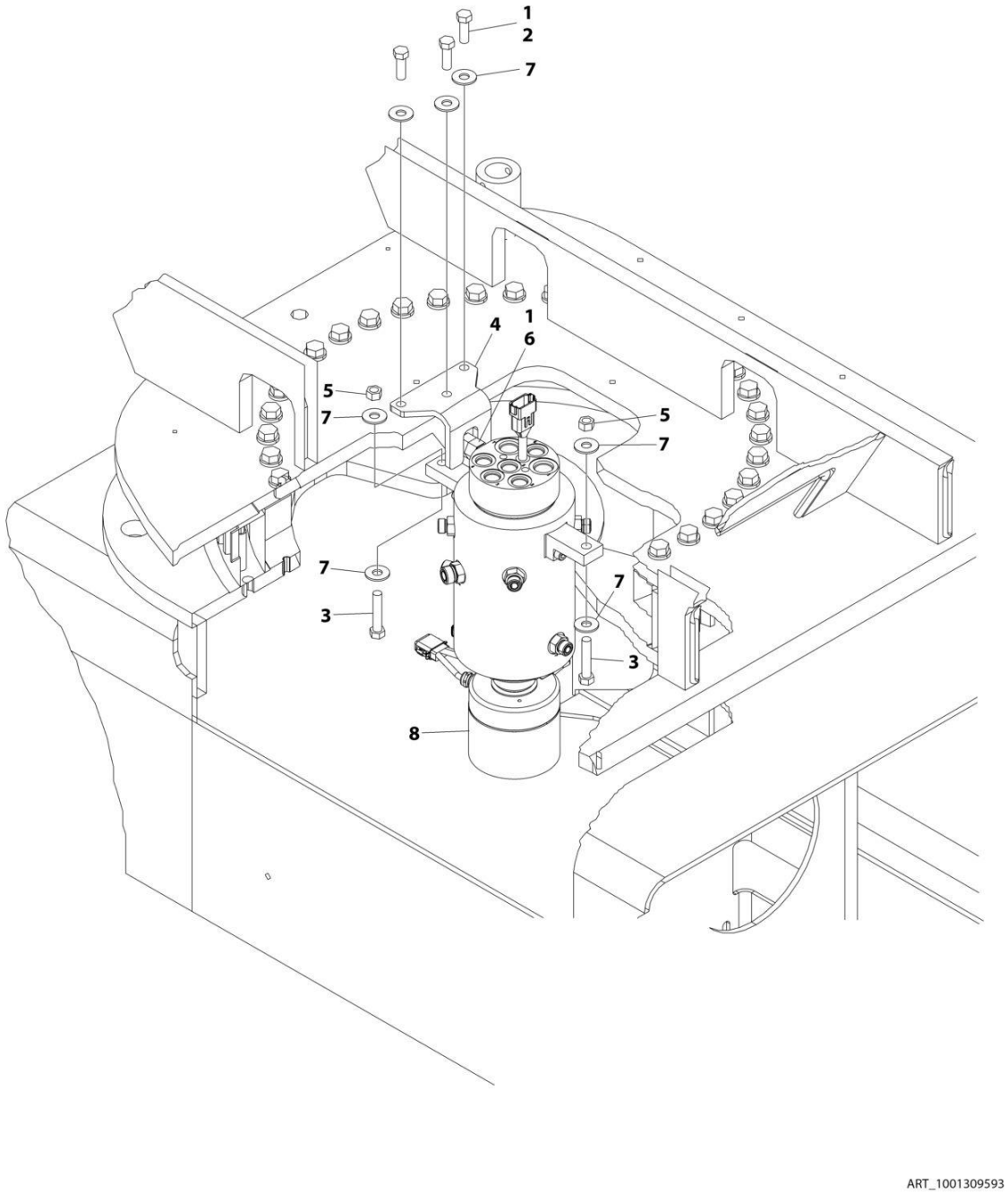

FIGURE 2-14. ROTARY COUPLING AND COLLECTOR RING INSTALLATION (MACHINES WITH SN STARTING WITH B3)

ITEM	PART NUMBER	QTY	DESCRIPTION	REV
	1001309593	Ref	ROTARY COUPLING AND COLLECTOR RING INSTALLATION	A
1	0100011	AR	Compound, Locking	
2	0641812	3	Bolt 1/2 x 1-1/2	
3	0641820	2	Bolt 1/2 x 2-1/2	
4	0902915	1	Bracket, Swivel	
5	3311805	2	Nut 1/2	
6	3322201	2	Nut 3/4	
7	4751800	7	Washer 1/2	
8	1001306691	1	Rotary Coupling and Collector Ring Assembly (See Separate Breakdown in this Section)	

FIGURE 2-15. ROTARY COUPLING AND COLLECTOR RING ASSEMBLY (MACHINES WITH SN STARTING WITH B3)

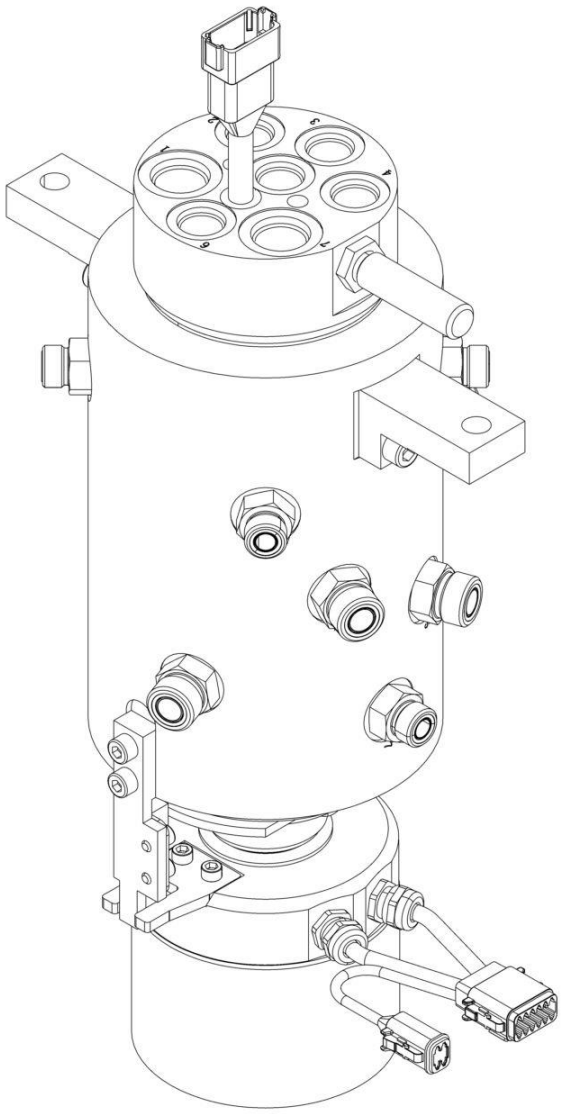

ART_1001306691

FIGURE 2-15. ROTARY COUPLING AND COLLECTOR RING ASSEMBLY (MACHINES WITH SN STARTING WITH B3)

ITEM	PART NUMBER	QTY	DESCRIPTION	REV
	1001306691	Ref	ROTARY COUPLING AND COLLECTOR RING ASSEMBLY	A
	See Note	NSS	Note: No Service Parts Available at Time of Printing	

FIGURE 2-16. TANK INSTALLATION - WITH ABS HOODS

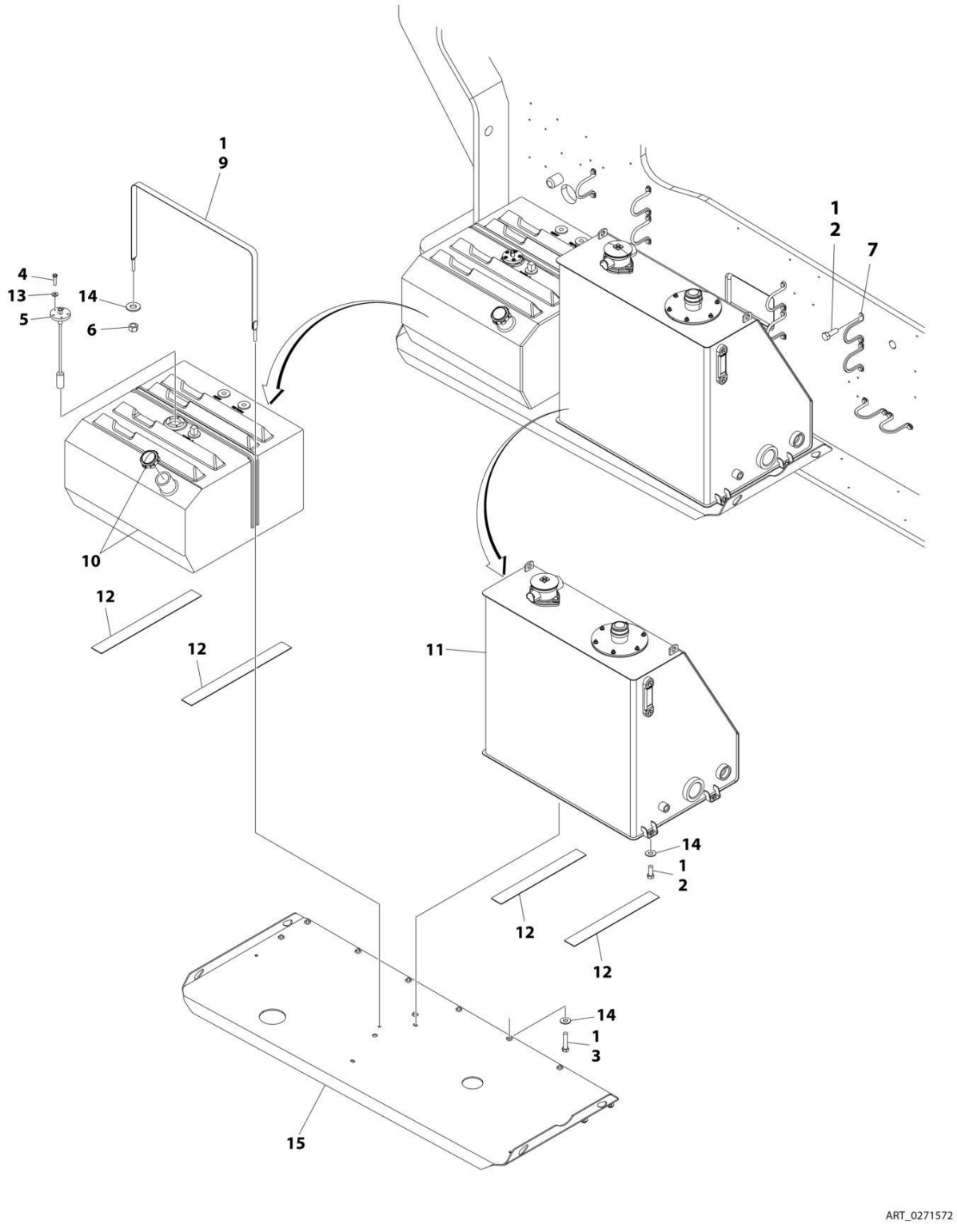

FIGURE 2-16. TANK INSTALLATION - WITH ABS HOODS

ITEM	PART NUMBER	QTY	DESCRIPTION	REV
	0271572	Ref	TANKS INSTALLATION - WITH ABS HOODS	C
1	0100011	AR	Compound, Locking	
2	0641608	22	Bolt 3/8 x 1	
3	0641614	10	Bolt 3/8 x 1-3/4	
4	0731007	5	Screw, Machine #10 x 7/8	
5	2420191	1	Gauge, Fuel	
6	3311601	2	Nut 3/8	
7	3841340	9	Loop, Hose	
9	4240139	1	Strap, Tank	
10	1001160567	1	Tank, Fuel	
10	70004414	1	Cap	
10	7020043	1	Tube, Pick up	
11	4400457	1	Tank, Hydraulic Oil (See Separate Breakdown in this Section)	
12	4420038	74 in /1.9m	Tape	
13	4751000	5	Washer #10	
14	4751600	16	Washer 3/8	
15	4846476	1	Tray	

FIGURE 2-17. TANK INSTALLATION - WITH STEEL HOODS

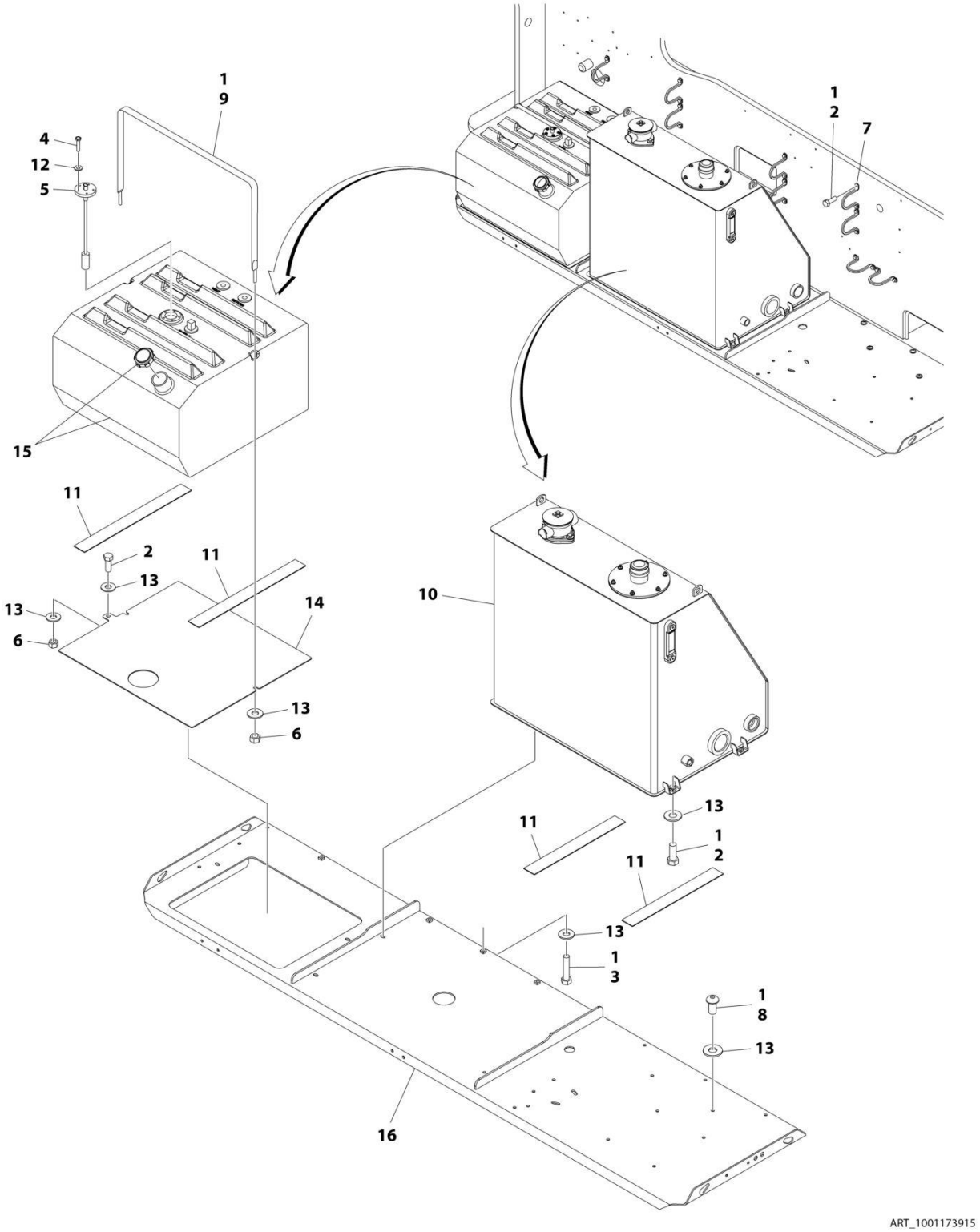

FIGURE 2-17. TANK INSTALLATION - WITH STEEL HOODS

ITEM	PART NUMBER	QTY	DESCRIPTION	REV
	1001173915	Ref	TANKS INSTALLATION - WITH STEEL HOODS	C
1	0100011	AR	Compound, Locking	
2	0641608	23	Bolt 3/8 x 1	
3	0641614	10	Bolt 3/8 x 1-3/4	
4	0731007	5	Screw, Machine #10 x 7/8	
5	2420191	1	Gauge, Fuel	
6	3311601	3	Nut 3/8	
7	3841340	9	Loop, Hose	
8	3900283	6	Screw 3/8 x 3/4	
9	4240139	1	Strap, Tank	
10	4400457	1	Tank, Hydraulic Oil (See Separate Breakdown in this Section)	
11	4420038	74 in /1.9m	Tape	
12	4751000	5	Washer #10	
13	4751600	24	Washer 3/8	
14	1001107359	1	Plate, Support	
15	1001160567	1	Tank, Fuel	
15	70004414	1	Cap	
15	7020043	1	Tube, Pick up	
16	1001173171	1	Tray	

FIGURE 2-18. TANK INSTALLATION - WITH STEEL HOODS AND 52.8 GAL/200 L FUEL TANK

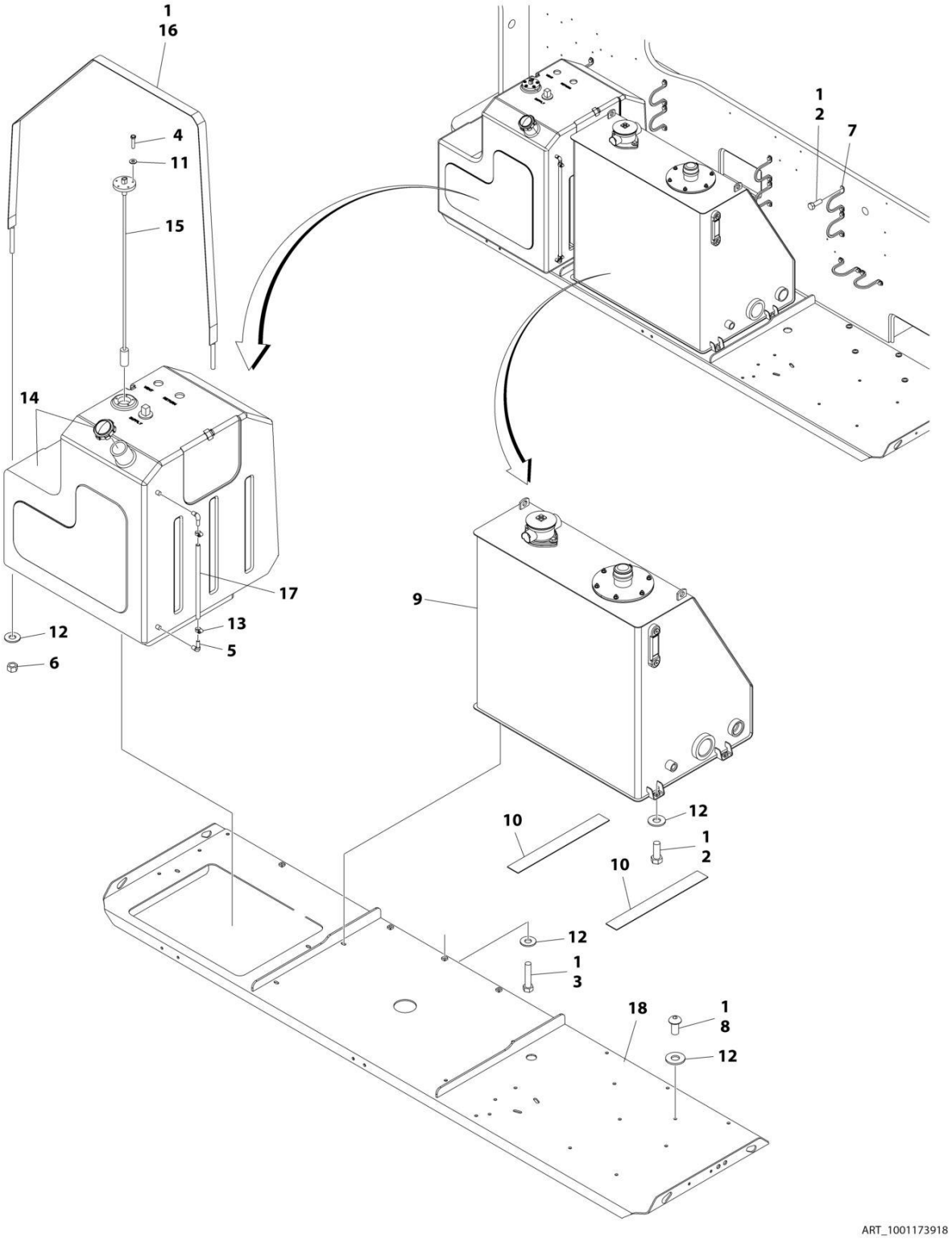

FIGURE 2-18. TANK INSTALLATION - WITH STEEL HOODS AND 52.8 GAL/200 L FUEL TANK

ITEM	PART NUMBER	QTY	DESCRIPTION	REV
	1001173918	Ref	TANKS INSTALLATION - WITH STEEL HOODS AND 52.8 GAL/200 L FUEL TANK	C
1	0100011	AR	Compound, Locking	
2	0641608	22	Bolt 3/8 x 1	
3	0641614	10	Bolt 3/8 x 1-3/4	
4	0731007	5	Screw, Machine #10 x 7/8	
5	2180467	2	Fitting, Barb	
6	3311601	2	Nut 3/8	
7	3841340	9	Loop, Hose	
8	3900283	6	Screw 3/8 x 3/4	
9	4400457	1	Tank, Hydraulic Oil (See Separate Breakdown in this Section)	
10	4420038	74 in/1.9m	Tape	
11	4751000	5	Washer #10	
12	4751600	22	Washer 3/8	
13	8405009	2	Clamp	
14	1001108579	1	Tank, Fuel	
14	7016314	1	Cap	
14	70004413	1	Tube, Pick up	
15	1001109048	1	Gauge, Fuel	
16	1001110059	1	Strap, Tank Mounting	
17	1001113103	19.5 in /0.5m	Tube, Sight	
18	1001173171	1	Tray	

FIGURE 2-19. TANK INSTALLATION - WITH ABS HOOS (CE & UK CA SPEC) (MACHINES WITH SN STARTING WITH B3)

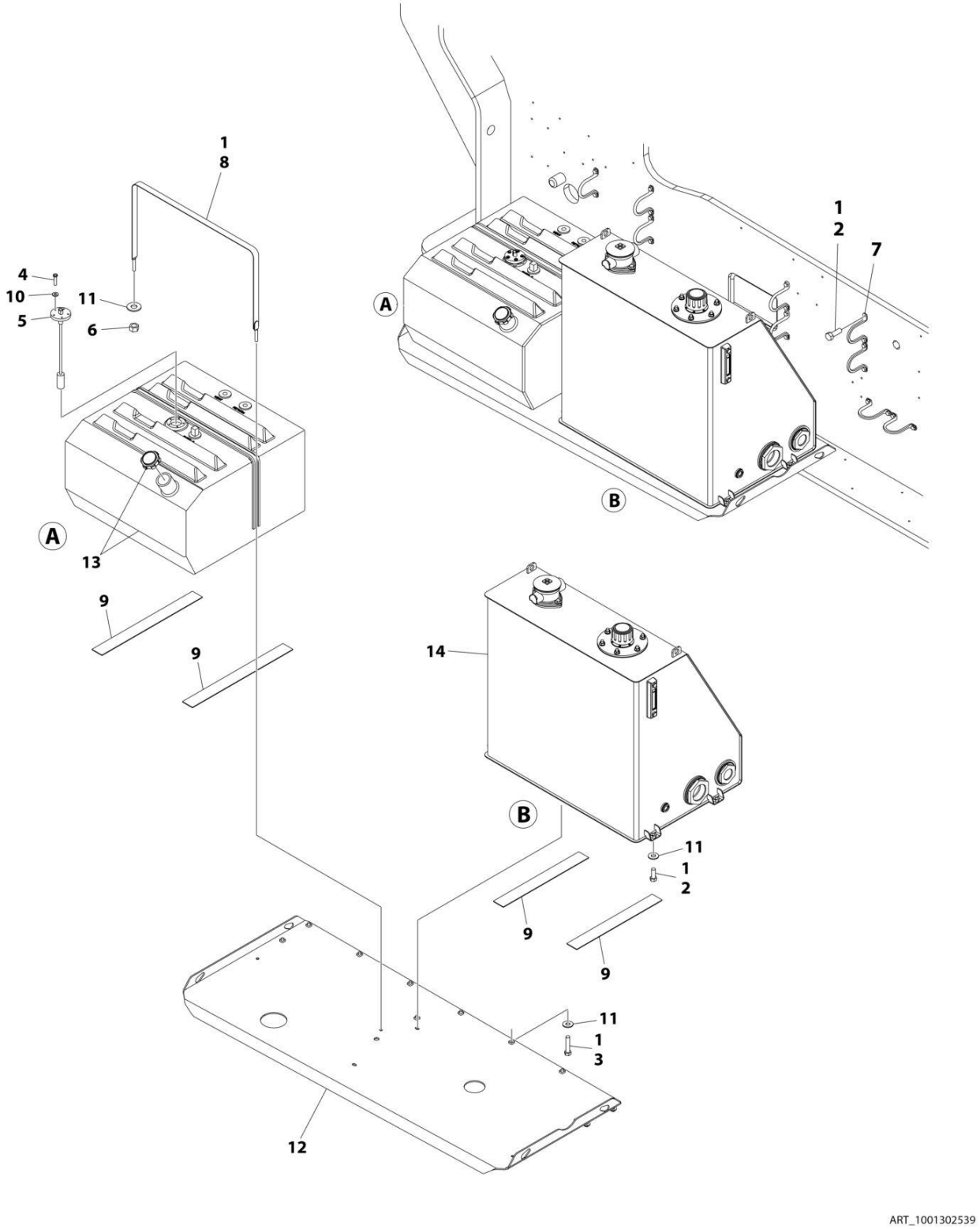

FIGURE 2-19. TANK INSTALLATION - WITH ABS HOOS (CE & UK CA SPEC) (MACHINES WITH SN STARTING WITH B3)

ITEM	PART NUMBER	QTY	DESCRIPTION	REV
	1001302539	Ref	TANK INSTALLATION WITH ABS HOODS	A
1	0100011	AR	Compound, Locking	
2	0641608	22	Bolt 3/8 x 1	
3	0641614	10	Bolt 3/8 x 1-3/4	
4	0731007	5	Screw, Machine #10 x 7/8	
5	2420191	1	Gauge, Fuel	
6	3311601	2	Nut 3/8	
7	3841340	9	Loop, Hose	
8	4240139	1	Strap, Tank	
9	4420038	6 ft /2m	Tape	
10	4751000	5	Washer #10	
11	4751600	16	Washer 3/8	
12	4846476	1	Tray	
13	1001160567	1	Tank, Fuel	
13	70004414	1	Cap	
13	7020043	1	Tube, Pick up	
14	1001294878	1	Tank, Hydraulic Oil (See Separate Breakdown in this Section)	

FIGURE 2-20. TANK INSTALLATION - WITH STEEL HOOS (MACHINES WITH SN STARTING WITH B3)

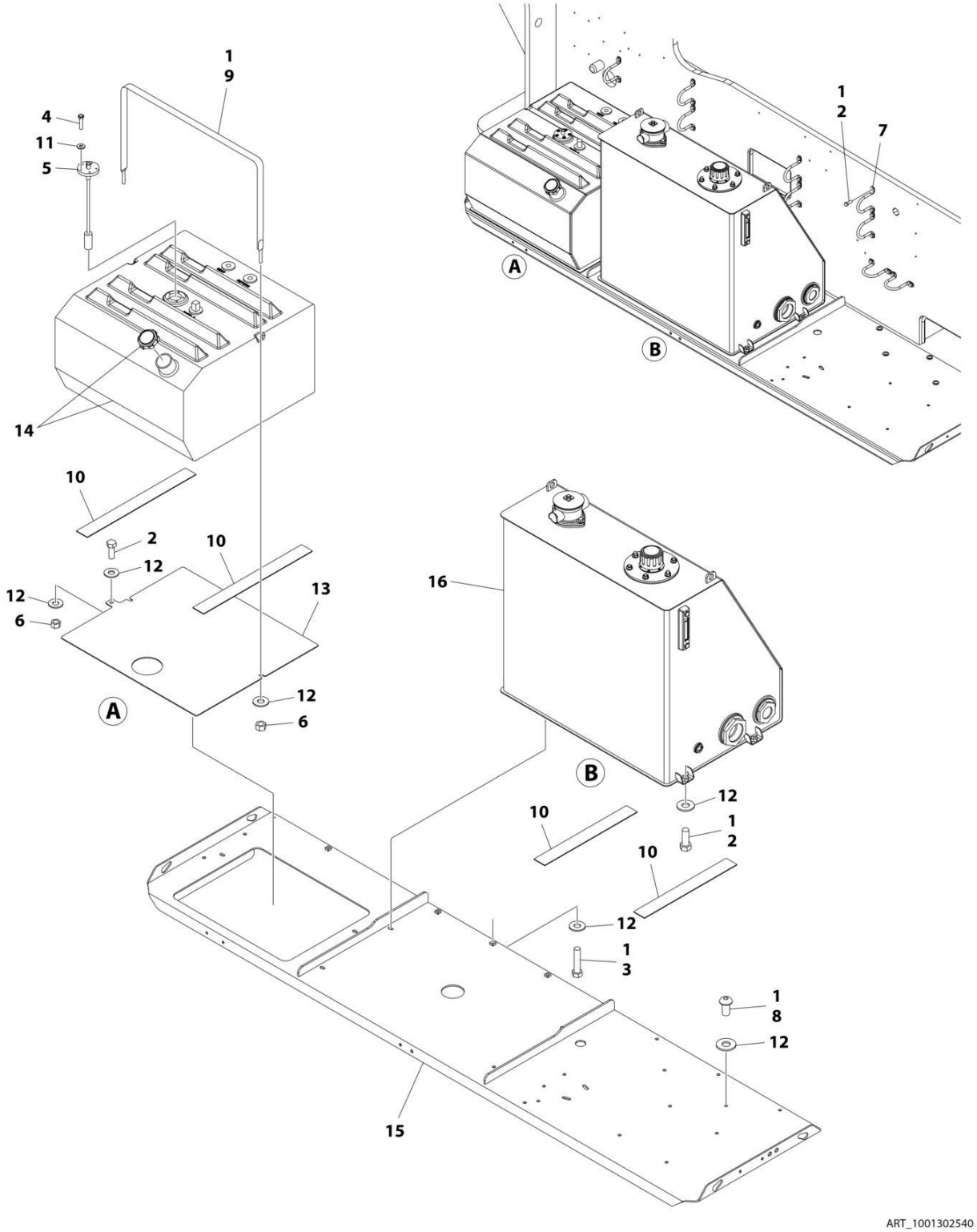

FIGURE 2-20. TANK INSTALLATION - WITH STEEL HOOS (MACHINES WITH SN STARTING WITH B3)

ITEM	PART NUMBER	QTY	DESCRIPTION	REV
	1001302540	Ref	TANK INSTALLATION - WITH STEEL HOODS	A
1	0100011	AR	Compound, Locking	
2	0641608	23	Bolt 3/8 x 1	
3	0641614	10	Bolt 3/8 x 1-3/4	
4	0731007	5	Screw, Machine #10 x 7/8	
5	2420191	1	Gauge, Fuel	
6	3311601	3	Nut 3/8	
7	3841340	9	Loop, Hose	
8	3900283	6	Screw 3/8 x 3/4	
9	4240139	1	Strap, Tank	
10	4420038	6 ft /2m	Tape	
11	4751000	5	Washer #10	
12	4751600	24	Washer 3/8	
13	1001107359	1	Plate, Support	
14	1001160567	1	Tank, Fuel	
14	70004414	1	Cap	
14	7020043	1	Tube, Pick up	
15	1001173171	1	Tray	
16	1001294878	1	Tank, Hydraulic Oil (See Separate Breakdown in this Section)	

FIGURE 2-21. TANK INSTALLATION - WITH STEEL HOOS AND 200L TANK (MACHINES WITH SN STARTING WITH B3)

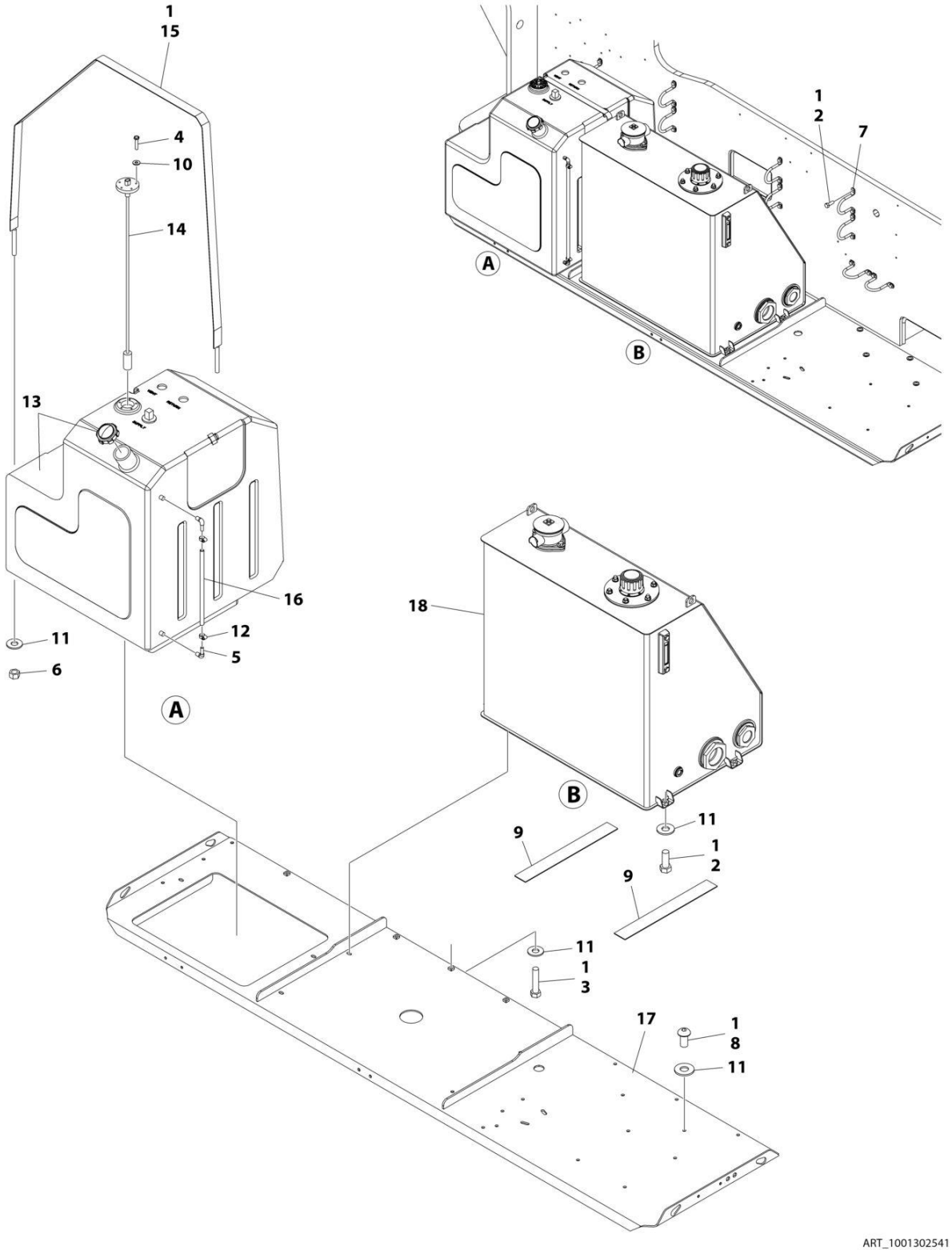

FIGURE 2-21. TANK INSTALLATION - WITH STEEL HOOS AND 200L TANK (MACHINES WITH SN STARTING WITH B3)

ITEM	PART NUMBER	QTY	DESCRIPTION	REV
	1001302541	Ref	TANK INSTALLATION - WITH STEEL HOODS	A
1	0100011	AR	Compound, Locking	
2	0641608	22	Bolt 3/8 x 1	
3	0641614	10	Bolt 3/8 x 1-3/4	
4	0731007	5	Screw, Machine #10 x 7/8	
5	2180467	2	Fitting, Barb	
6	3311601	2	Nut 3/8	
7	3841340	9	Loop, Hose	
8	3900283	6	Screw 3/8 x 3/4	
9	4420038	6 ft /2m	Tape	
10	4751000	5	Washer #10	
11	4751600	22	Washer 3/8	
12	8405009	2	Clamp	
13	1001108579	1	Tank, Fuel	
13	7016314	1	Cap	
13	70004413	1	Tube, Pick up	
14	1001109048	1	Gauge, Fuel	
15	1001110059	1	Strap, Tank Mounting	
16	1001113103	20 in /50cm	Tube, Sight	
17	1001173171	1	Tray	
18	1001294878	1	Tank, Hydraulic Oil (See Separate Breakdown in this Section)	

FIGURE 2-22. HYDRAULIC OIL TANK ASSEMBLY

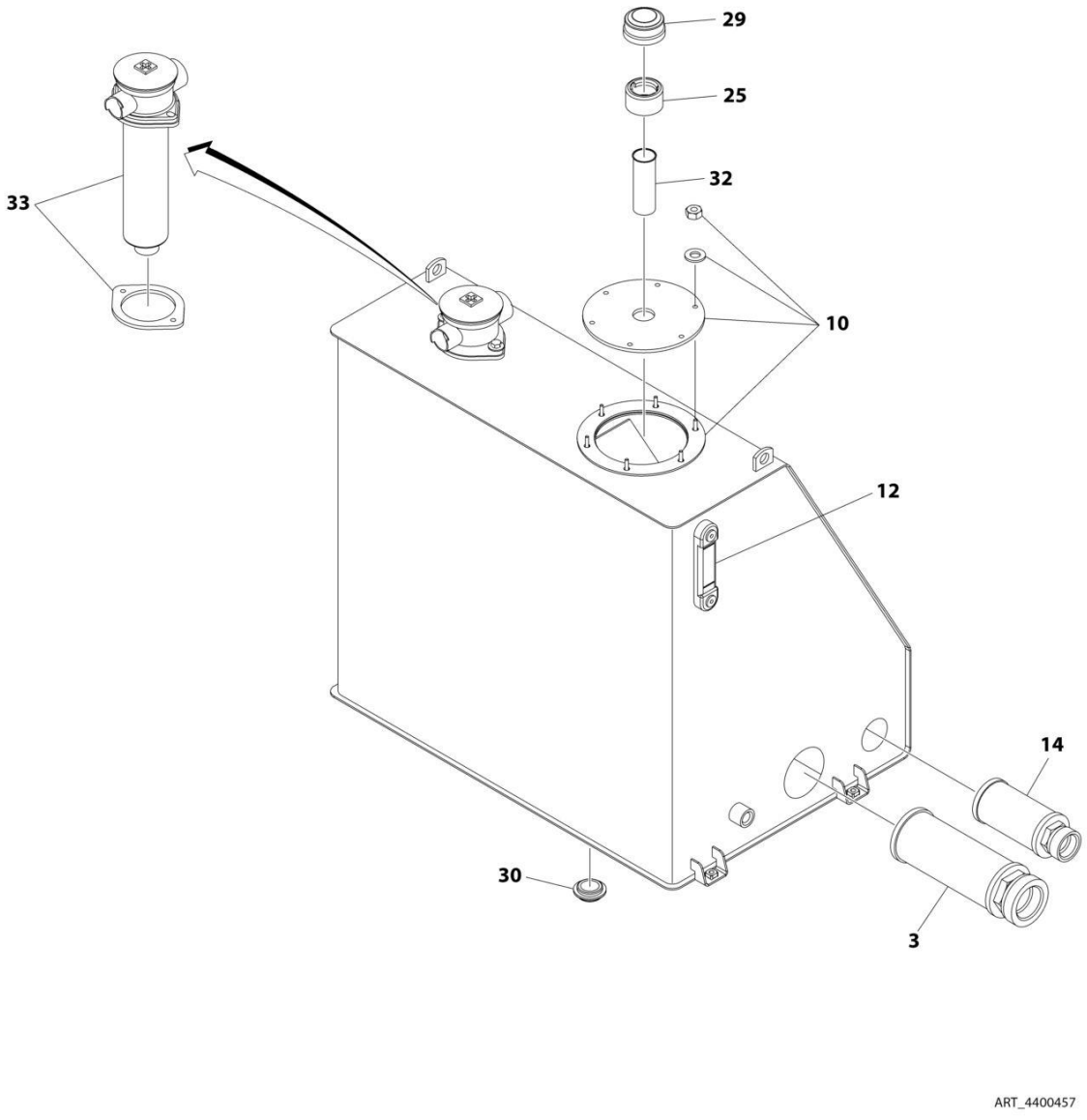

FIGURE 2-22. HYDRAULIC OIL TANK ASSEMBLY

ITEM	PART NUMBER	QTY	DESCRIPTION	REV
	4400457	Ref	HYDRAULIC OIL TANK ASSEMBLY	E
3	7026571	1	Strainer, Suction	
10	7024439	1	Cover	
10	7023306	1	Seal, Cover Plate	
10	7024440	1	Gasket	
12	7024441	1	Gauge, Sight	
14	7024442	1	Strainer	
25	7024445	1	Strainer (Filler Neck)	
29	7024444	1	Cap, Fill	
30	7024446	1	Plug, Magnetic	
32	7024443	1	Neck, Filler	
33	7024374	1	Filter, Hydraulic Oil	
33	7024375	1	Element, Filter	
33	7023347	1	Gasket, Filter Mounting Flange	

FIGURE 2-23. HYDRAULIC OIL TANK ASSEMBLY (MACHINES WITH SN STARTING WITH B3)

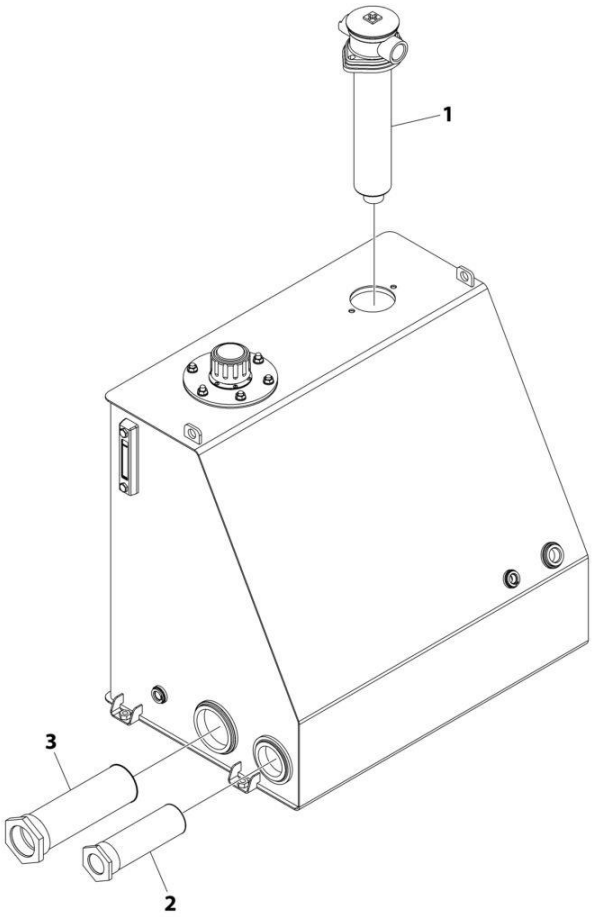

ART_1001294878

FIGURE 2-23. HYDRAULIC OIL TANK ASSEMBLY (MACHINES WITH SN STARTING WITH B3)

ITEM	PART NUMBER	QTY	DESCRIPTION	REV
	1001294878	Ref	HYDRAULIC OIL TANK ASSEMBLY	A
1	1001147551	1	Filter	
2	1001299762	1	Filter	
3	1001299763	1	Filter	

FIGURE 2-24. HYDRAULIC OIL COOLER INSTALLATION - DEUTZ TD2011 ENGINES WITH REXROTH PUMPS (OPTIONAL)

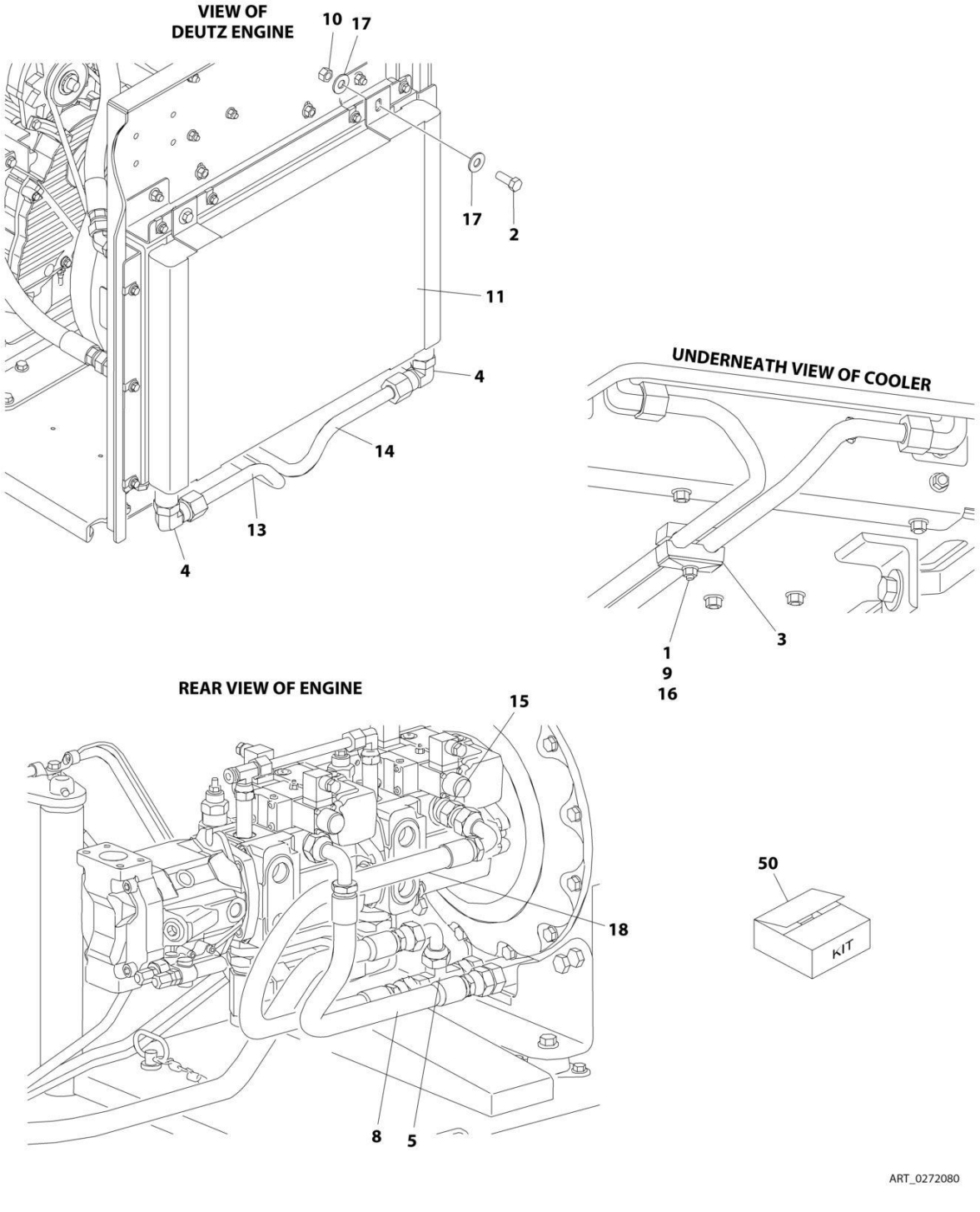

FIGURE 2-24. HYDRAULIC OIL COOLER INSTALLATION - DEUTZ TD2011 ENGINES WITH REXROTH PUMPS (OPTIONAL)

ITEM	PART NUMBER	QTY	DESCRIPTION	REV
	0272080	Ref	HYDRAULIC OIL COOLER INSTALLATION - DEUTZ TD2011 ENGINES WITH REXROTH PUMPS (OPTIONAL)	B
		Ref	Note: See Engine Installation for Engine Oil Cooler.	
1	0641520	2	Bolt 5/16 x 2-1/2	
2	0641608	4	Bolt 3/8 x 1	
3	1320162	2	Clamp, Hose	
4	2131212	2	Fitting, Elbow	
5	2170712	1	Fitting, Tee	
8	2753778	1	Hose	
9	3311505	2	Nut 5/16	
10	3311605	4	Nut 3/8	
11	3620034	1	Cooler, Hydraulic Oil	
13	4568426	1	Tube	
14	4568427	1	Tube	
15	4641247	1	Valve, Check	
16	4711500	4	Washer 5/16	
17	4751600	8	Washer 3/8	
18	2753843	1	Hose	
50	1001120564	1	Oil Cooler Add-on Kit (Includes Items 1-18)	

FIGURE 2-25. HYDRAULIC OIL COOLER INSTALLATION - DEUTZ TD2011 ENGINES WITH SAUER PUMPS (OPTIONAL)

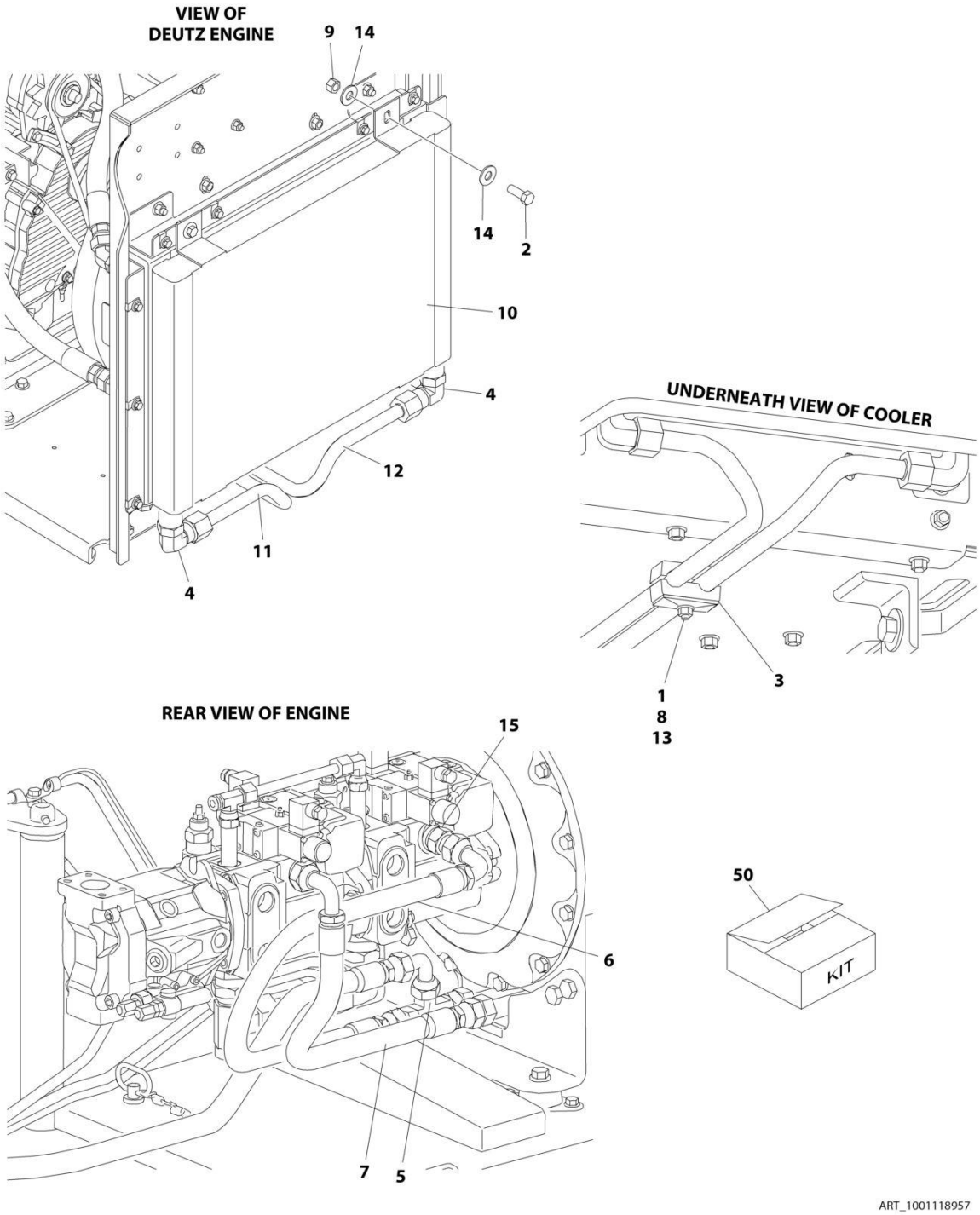

FIGURE 2-25. HYDRAULIC OIL COOLER INSTALLATION - DEUTZ TD2011 ENGINES WITH SAUER PUMPS (OPTIONAL)

ITEM	PART NUMBER	QTY	DESCRIPTION	REV
	1001118957	Ref	HYDRAULIC OIL COOLER INSTALLATION - DEUTZ TD2011 ENGINES WITH SAUER PUMPS (OPTIONAL)	B
		Ref	Note: See Engine Installation for Engine Oil Cooler.	
1	0641520	2	Bolt 5/16 x 2-1/2	
2	0641608	4	Bolt 3/8 x 1	
3	1320162	2	Clamp, Hose	
4	2131212	2	Fitting, Elbow	
5	2170712	1	Fitting, Tee	
6	2753778	1	Hose	
7	2753999	1	Hose	
8	3311505	2	Nut 5/16	
9	3311605	4	Nut 3/8	
10	3620034	1	Cooler, Hydraulic Oil	
11	4568426	1	Tube	
12	4568427	1	Tube	
13	4711500	4	Washer 5/16	
14	4751600	8	Washer 3/8	
15	1001109677	1	Valve, Check	
50	1001120564	1	Oil Cooler Add-on Kit Options (Includes Items 1-15):	

FIGURE 2-26. HYDRAULIC OIL COOLER INSTALLATION - DEUTZ TCD2.9L4 ENGINES AND DEUTZ TCD2.9L4 (STAGE V) ENGINES WITH REXROTH PUMPS (OPTIONAL)

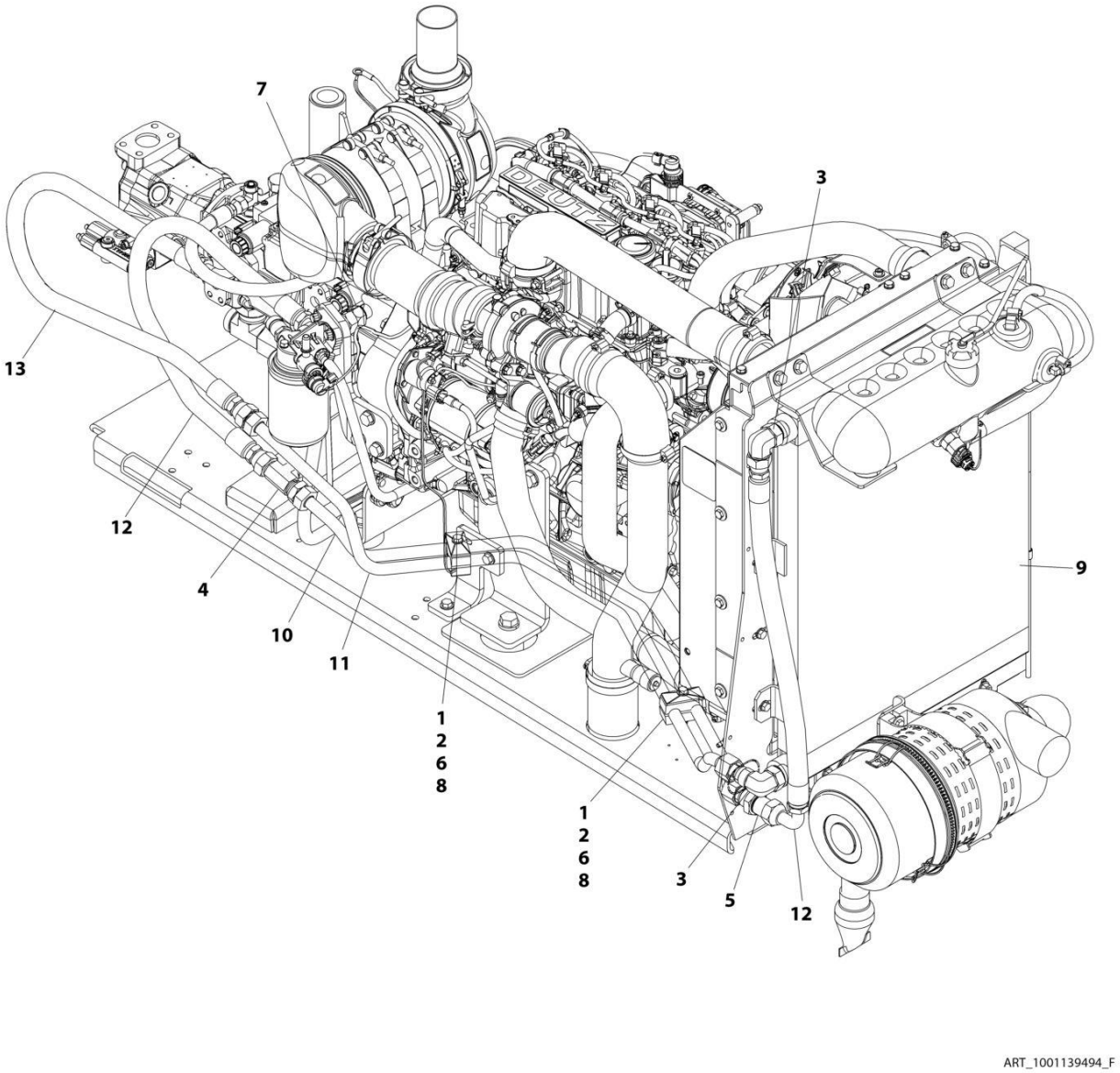

FIGURE 2-26. HYDRAULIC OIL COOLER INSTALLATION - DEUTZ TCD2.9L4 ENGINES AND DEUTZ TCD2.9L4 (STAGE V) ENGINES WITH REXROTH PUMPS (OPTIONAL)

ITEM	PART NUMBER	QTY	DESCRIPTION	REV
	1001139494	Ref	HYDRAULIC OIL COOLER INSTALLATION - DEUTZ TCD2.9L4 ENGINES WITH REXROTH PUMPS (OPTIONAL)	F
		Ref	Note: See Engine Installation for Engine Oil Cooler.	
1	0641520	2	Bolt 5/16 x 2-1/2	
2	1320162	2	Clamp, Hose	
3	2131212	2	Fitting, 90	
4	2170712	1	Fitting, Tee	
5	2171112	1	Fitting, Straight	
6	3311505	2	Nut 5/16	
7	4641247	1	Valve	
8	4711500	4	Washer 5/16	
9	1001256859	1	Cooler, Hydraulic Oil	
10	1001139665	1	Tube	
11	1001139666	1	Tube	
12	1001143087	2	Hose	
13	1001143123	1	Hose	

FIGURE 2-27. HYDRAULIC OIL COOLER INSTALLATION - DEUTZ TCD2.9L4 ENGINES WITH REXROTH PUMPS (OPTIONAL) (CHINA SPEC ONLY)

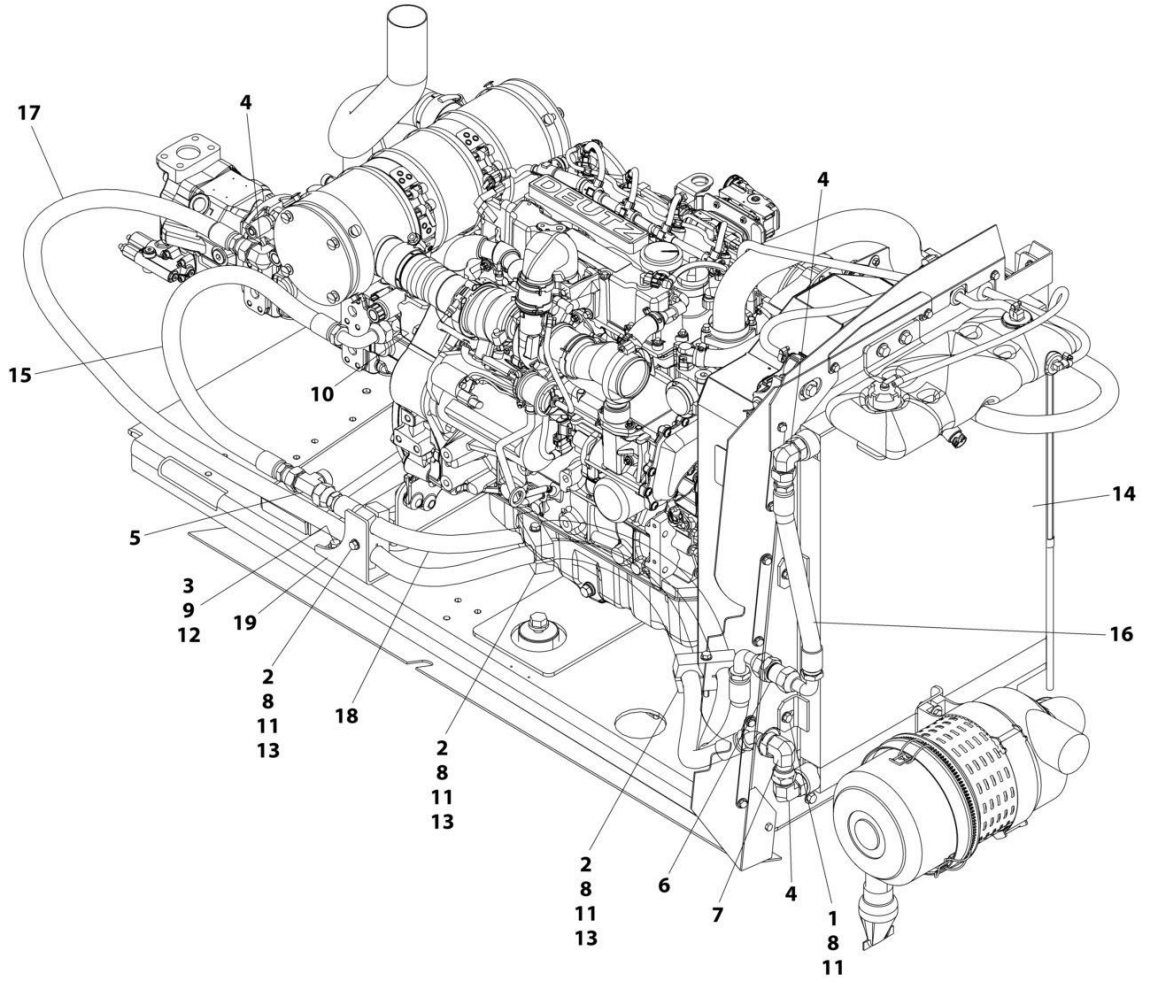

FIGURE 2-27. HYDRAULIC OIL COOLER INSTALLATION - DEUTZ TCD2.9L4 ENGINES WITH REXROTH PUMPS (OPTIONAL) (CHINA SPEC ONLY)

ITEM	PART NUMBER	QTY	DESCRIPTION	REV
	1001221802	Ref	HYDRAULIC OIL COOLER INSTALLATION - DEUTZ TCD2.9L4 ENGINES WITH REXROTH PUMPS (OPTIONAL)	B
1	0641508	4	Bolt 5/16 x 1	
2	0641524	3	Bolt 5/16 x 3	
3	0641609	2	Bolt 3/8 x 1-1/8	
4	2131212	3	Fitting, 90 ORFS/ORB	
5	2170512	1	Fitting, Tee ORFS/ORFS/ORFS	
6	2171112	1	Fitting, Straight ORFS/ORFS	
7	2172112	1	Fitting, 90 ORFS/FSORFS	
8	3311505	7	Nut 5/16	
9	3311605	2	Nut 3/8	
10	4641247	1	Valve	
11	4711500	14	Washer 5/16	
12	4711600	4	Washer 3/8	
13	8750024	3	Clamp	
14	1001256859	1	Cooler, Hydraulic Oil	
15	1001143087	1	Hose	
16	1001181129	1	Hose	
17	1001188376	1	Hose	
18	1001188382	1	Hose	
19	1001220560	1	Bracket	

FIGURE 2-28. HYDRAULIC OIL COOLER INSTALLATION – DEUTZ TCD2.9L4 ENGINES AND DEUTZ TCD2.9L4 (STAGE V & CHINA IV) ENGINES WITH SAUER PUMPS (OPTIONAL)

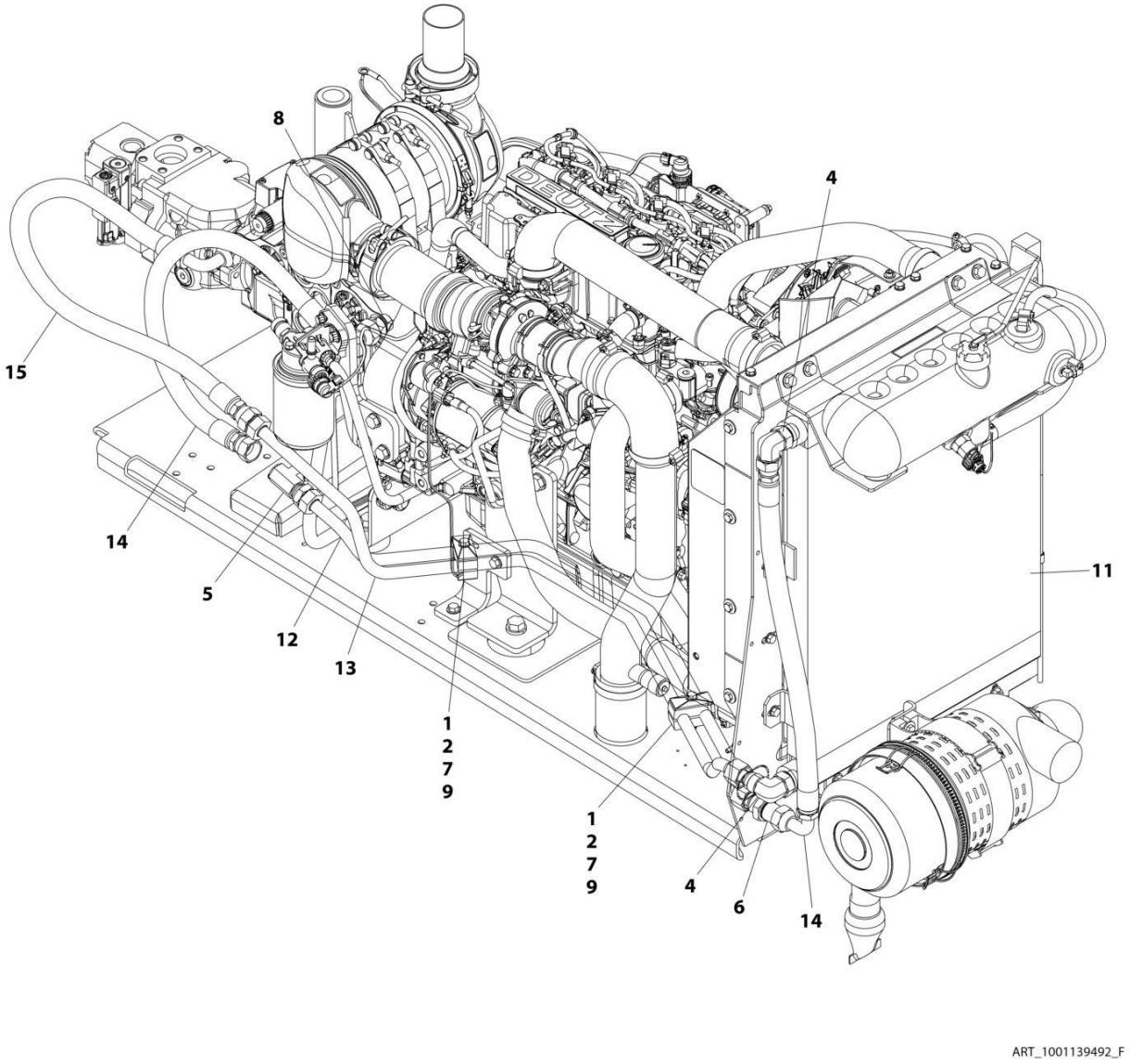

FIGURE 2-28. HYDRAULIC OIL COOLER INSTALLATION – DEUTZ TCD2.9L4 ENGINES AND DEUTZ TCD2.9L4 (STAGE V & CHINA IV) ENGINES WITH SAUER PUMPS (OPTIONAL)

ITEM	PART NUMBER	QTY	DESCRIPTION	REV
	1001139492	Ref	HYDRAULIC OIL COOLER INSTALLATION - DEUTZ TCD2.9L4 ENGINES WITH SAUER PUMPS (OPTIONAL)	F
		Ref	Note: See Engine Installation for Engine Oil Cooler	
1	0641520	2	Bolt 5/16 x 2-1/2	
2	1320162	2	Clamp, Hose	
4	2131212	2	Fitting, 90	
5	2170712	1	Fitting, Tee	
6	2171112	1	Fitting, Straight	
7	3311505	2	Nut 5/16	
8	1001109677	1	Valve	
9	4711500	4	Washer 5/16	
11	1001256859	1	Cooler, Hydraulic Oil	
12	1001139665	1	Tube	
13	1001139666	1	Tube	
14	1001143087	2	Hose	
15	1001143123	1	Hose	

FIGURE 2-29. HYDRAULIC OIL COOLER INSTALLATION - DEUTZ TCD2.9L4 ENGINES WITH SAUER PUMPS (OPTIONAL) (CHINA SPEC ONLY)

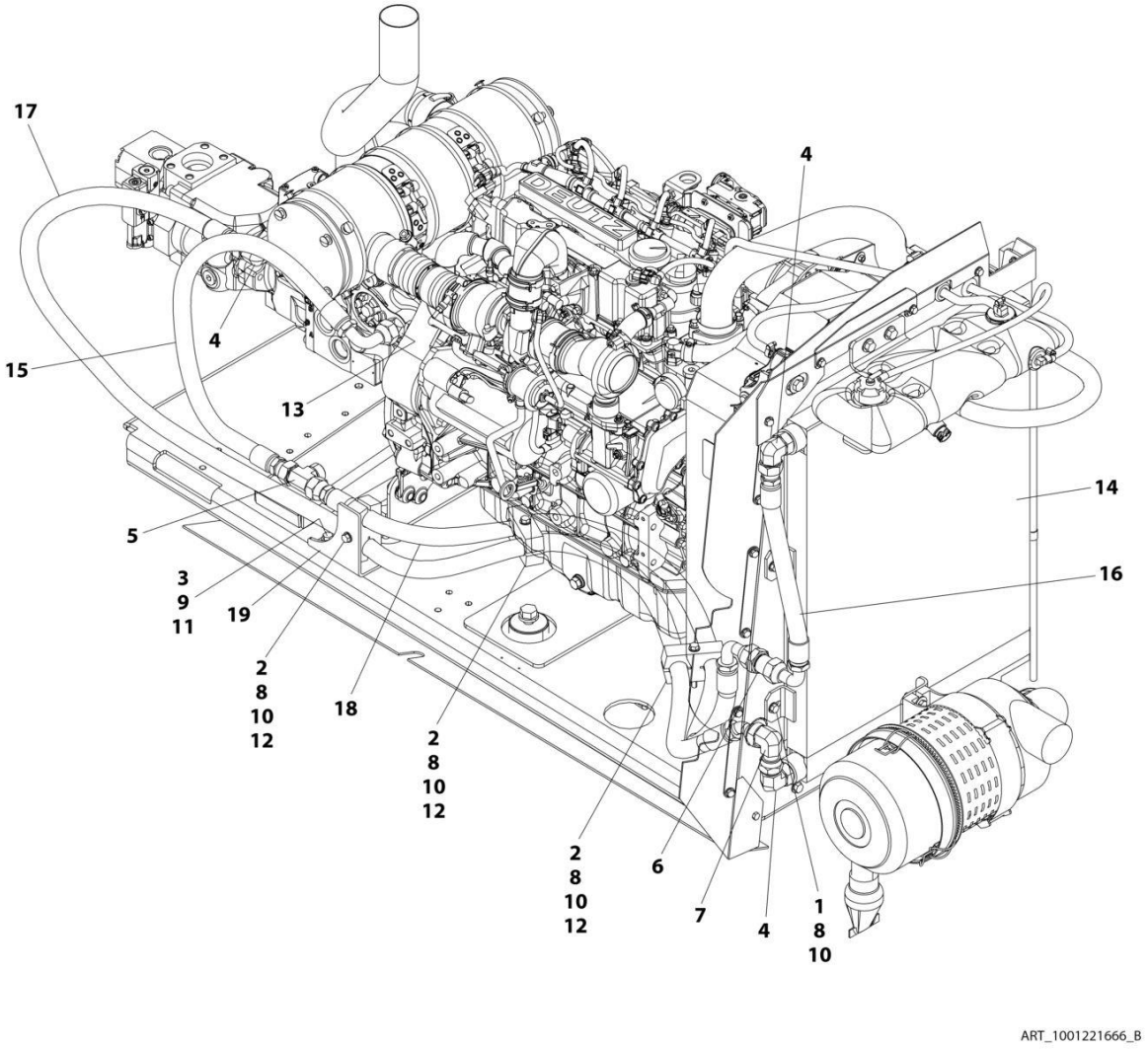

FIGURE 2-29. HYDRAULIC OIL COOLER INSTALLATION - DEUTZ TCD2.9L4 ENGINES WITH SAUER PUMPS (OPTIONAL) (CHINA SPEC ONLY)

ITEM	PART NUMBER	QTY	DESCRIPTION	REV
	1001221666	Ref	HYDRAULIC OIL COOLER INSTALLATION - DEUTZ TCD2.9L4 ENGINES WITH SAUER PUMPS (OPTIONAL)	B
1	0641508	4	Bolt 5/16 x 1	
2	0641524	3	Bolt 5/16 x 3	
3	0641609	2	Bolt 3/8 x 1-1/8	
4	2131212	3	Fitting, 90 ORFS/ORB	
5	2170512	1	Fitting, Tee ORFS/ORFS/ORFS	
6	2171112	1	Fitting, Straight ORFS/ORFS	
7	2172112	1	Fitting, 90 ORFS/FSORFS	
8	3311505	7	Nut 5/16	
9	3311605	2	Nut 3/8	
10	4711500	14	Washer 5/16	
11	4711600	4	Washer 3/8	
12	8750024	3	Clamp	
13	1001109677	1	Valve	
14	1001256859	1	Cooler, Hydraulic Oil	
15	1001143087	1	Hose	
16	1001181129	1	Hose	
17	1001188376	1	Hose	
18	1001188382	1	Hose	
19	1001220560	1	Bracket	

FIGURE 2-30. HYDRAULIC OIL COOLER INSTALLATION - DEUTZ TCD2.9L4 ENGINES AND DEUTZ TCD2.9L4 (STAGE V) ENGINES WITH PMP PUMPS (OPTIONAL)

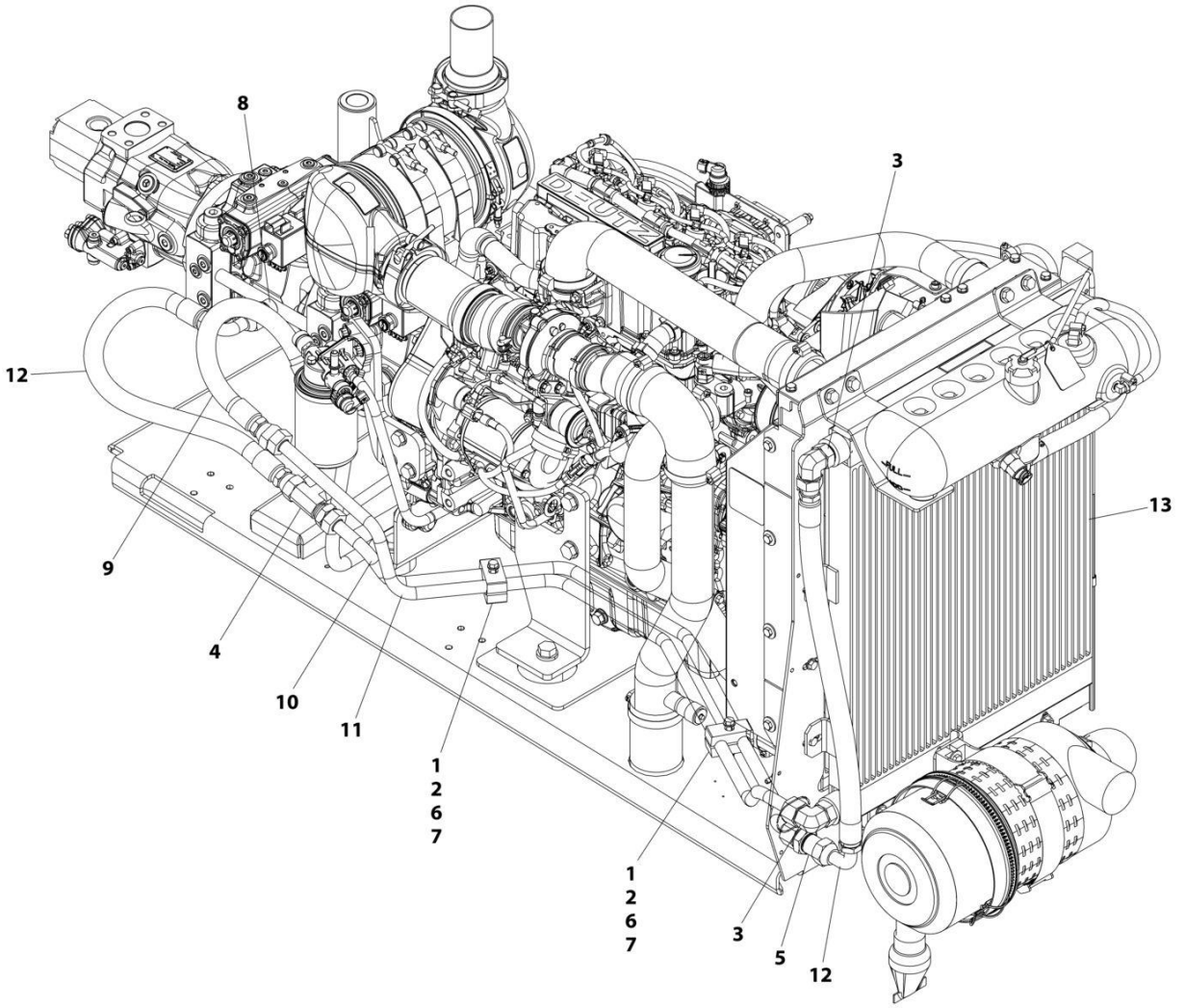

FIGURE 2-30. HYDRAULIC OIL COOLER INSTALLATION - DEUTZ TCD2.9L4 ENGINES AND DEUTZ TCD2.9L4 (STAGE V) ENGINES WITH PMP PUMPS (OPTIONAL)

ITEM	PART NUMBER	QTY	DESCRIPTION	REV
	1001297305	Ref	HYDRAULIC OIL COOLER INSTALLATION - DEUTZ TCD2.9L4 (STAGE V) ENGINES WITH PMP PUMPS	A
1	0641520	2	Bolt 5/16 x 2-1/2	
2	1320162	2	Clamp	
3	2131212	2	Fitting, 90 ORFS/ORB	
4	2170712	1	Fitting, Tee ORFS/FSORFS/ORFS	
5	2171112	1	Fitting, Straight ORFS/ORFS	
6	3311505	2	Nut 5/16	
7	4711500	4	Washer 5/16	
8	1001109677	1	Valve	
9	1001113006	1	Hose	
10	1001139665	1	Tube	
11	1001139666	1	Tube	
12	1001143087	2	Hose	
13	1001256859	1	Cooler, Hydraulic Oil	

FIGURE 2-31. HYDRAULIC OIL COOLER INSTALLATION - DEUTZ TD2011 ENGINES WITH PMP PUMPS (OPTIONAL)

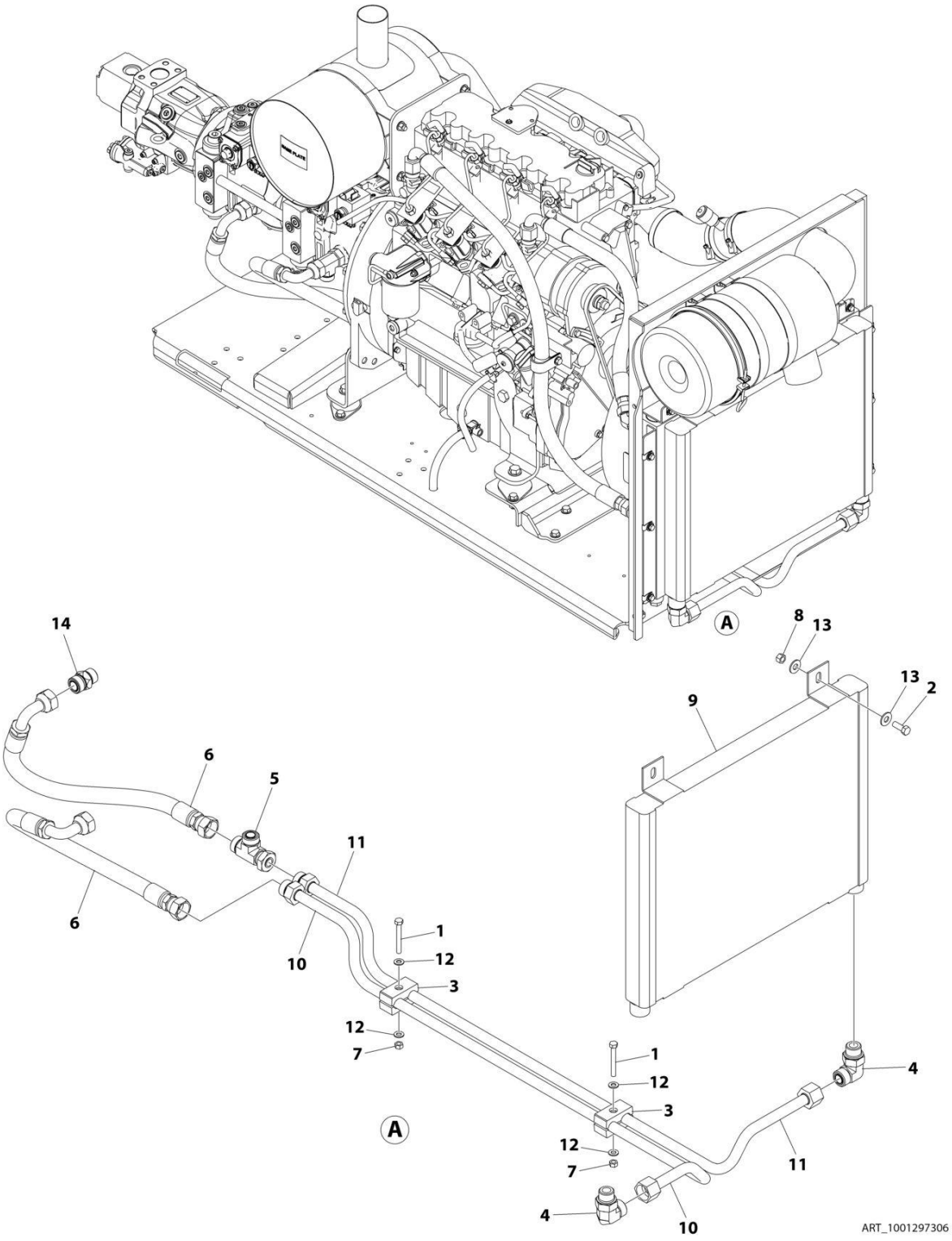

FIGURE 2-31. HYDRAULIC OIL COOLER INSTALLATION - DEUTZ TD2011 ENGINES WITH PMP PUMPS (OPTIONAL)

ITEM	PART NUMBER	QTY	DESCRIPTION	REV
	1001297306	Ref	HYDRAULIC OIL COOLER INSTALLATION - DEUTZ TCD2.9L4 ENGINES WITH PMP PUMPS - TANDEM	A
1	0641520	2	Bolt 5/16 x 2-1/2	
2	0641608	4	Bolt 3/8 x 1	
3	1320162	2	Clamp	
4	2131212	2	Fitting 90 ORFS/ORB	
5	2170712	1	Fitting, Tee ORFS/FSORFS/ORFS	
6	2753778	1	Hose	
7	3311505	2	Nut 5/16	
8	3311605	4	Nut 3/8	
9	3620034	1	Cooler, Hydraulic Oil	
10	4568426	1	Tube	
11	4568427	1	Tube	
12	4711500	4	Washer 5/16	
13	4751600	8	Washer 3/8	
14	1001109677	1	Valve	

FIGURE 2-32. GROUND CONTROL BOX INSTALLATION - DEUTZ TD2011 ENGINES WITH REXROTH PUMPS (CE & UK CA SPECS)

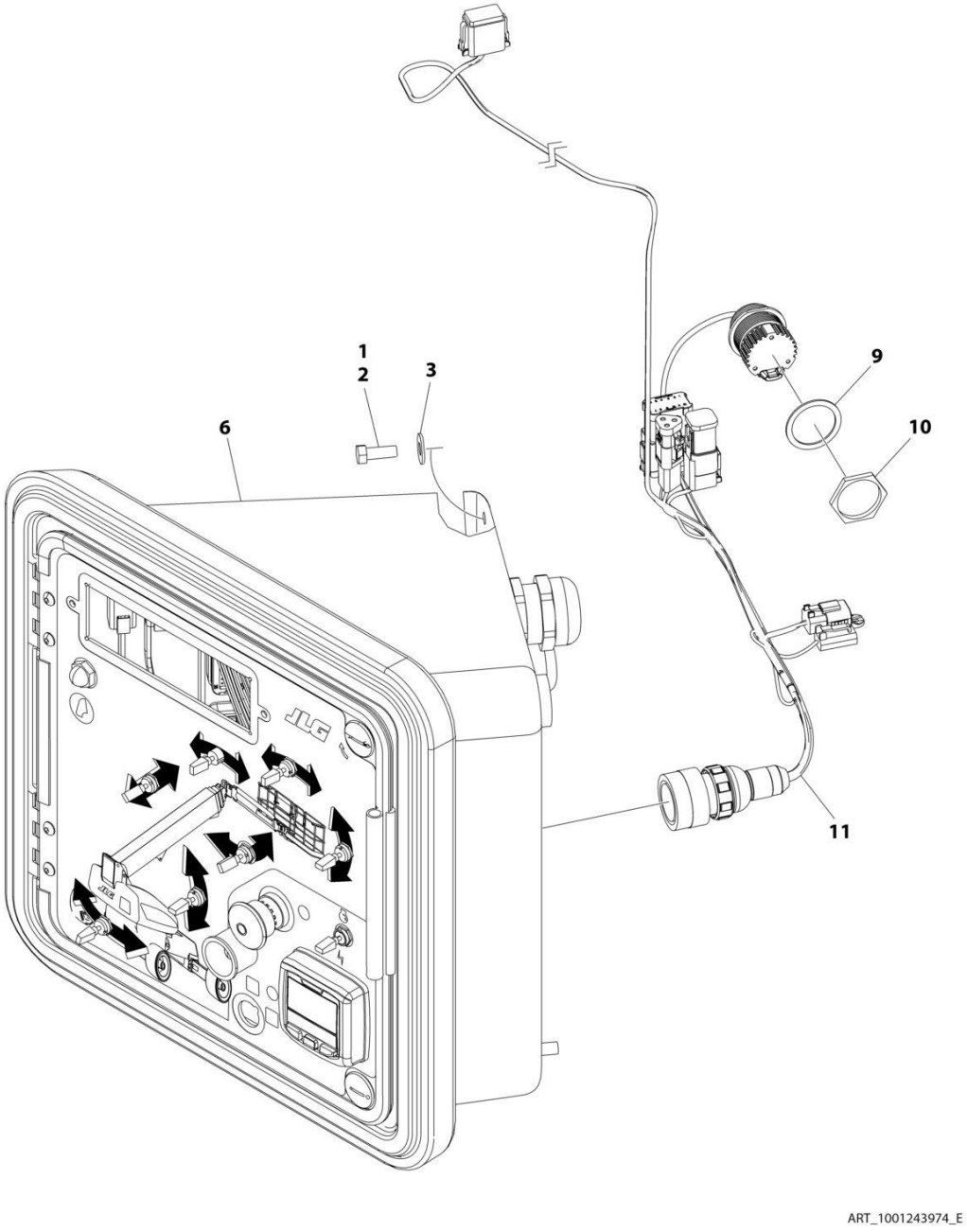

FIGURE 2-32. GROUND CONTROL BOX INSTALLATION - DEUTZ TD2011 ENGINES WITH REXROTH PUMPS (CE & UK CA SPECS)

ITEM	PART NUMBER	QTY	DESCRIPTION	REV
	1001243974	Ref	GROUND CONTROL BOX INSTALLATION - DEUTZ TD2011 ENGINES WITH REXROTH PUMPS	E
1	0100011	AR	Compound, Locking	
2	3931616	2	Bolt 3/8 x 3/4	
3	4751600	2	Washer 3/8	
4	1001119456	2	Harness, Pump Adapter (Not Shown) (See Separate Breakdown in ELECTRICAL Section)	
5	1001119470	1	Harness, Engine (Not Shown) (See Separate Breakdown in ELECTRICAL Section)	
6	1001265975	1	Ground Control Box Assembly (See Separate Breakdown in this Section)	
7	4240032	AR	Tie-Strap (Not Shown)	
8	4460234	AR	Mount, Tie-Strap (Not Shown)	
9	4460496	1	Washer, Lock	
10	4460497	1	Nut	
11	1001287275	1	Harness, Diagnostic (See Separate Breakdown in ELECTRICAL Section)	

FIGURE 2-33. GROUND CONTROL BOX INSTALLATION - DEUTZ TD2011 ENGINES WITH SAUER PUMPS (CE & UK CA SPECS)

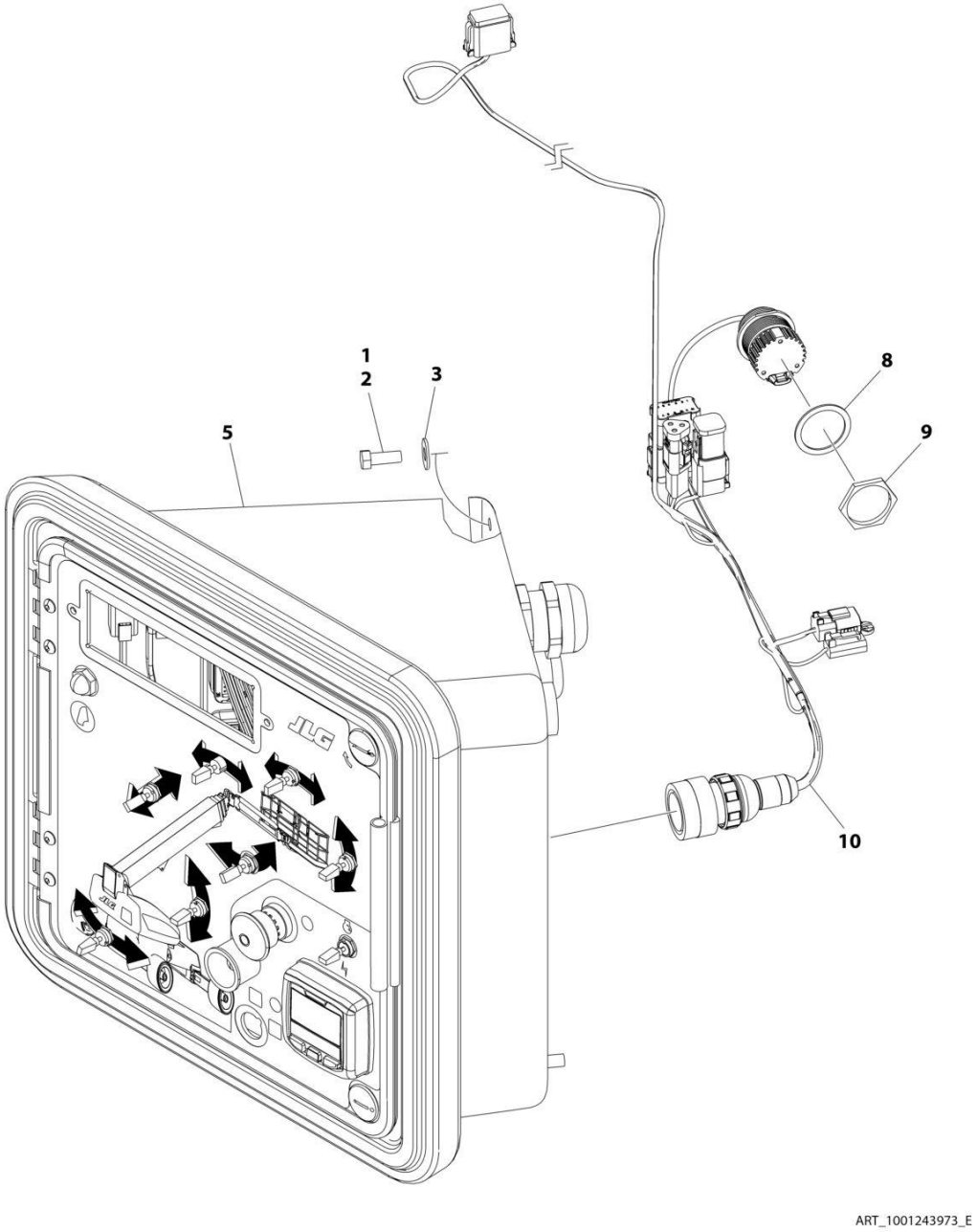

FIGURE 2-33. GROUND CONTROL BOX INSTALLATION - DEUTZ TD2011 ENGINES WITH SAUER PUMPS (CE & UK CA SPECS)

ITEM	PART NUMBER	QTY	DESCRIPTION	REV
	1001243973	Ref	GROUND CONTROL BOX INSTALLATION - DEUTZ TD2011 ENGINES WITH SAUER PUMPS	E
1	0100011	AR	Compound, Locking	
2	3931616	2	Bolt 3/8 x 3/4	
3	4751600	2	Washer 3/8	
4	1001119470	1	Harness, Engine (Not Shown) (See Separate Breakdown in ELECTRICAL Section)	
5	1001265975	1	Ground Control Box Assembly (See Separate Breakdown in this Section)	
6	4240032	AR	Tie-Strap (Not Shown)	
7	4460234	AR	Mount, Tie-Strap (Not Shown)	
8	4460496	1	Washer, Lock	
9	4460497	1	Nut	
10	1001287275	1	Harness, Diagnostic (See Separate Breakdown in ELECTRICAL Section)	

FIGURE 2-34. GROUND CONTROL BOX INSTALLATION - DEUTZ TCD2.9L4 ENGINES (ANSI, ANSI EXPORT, CSA, CHINA AND JAPANESE SPECS)

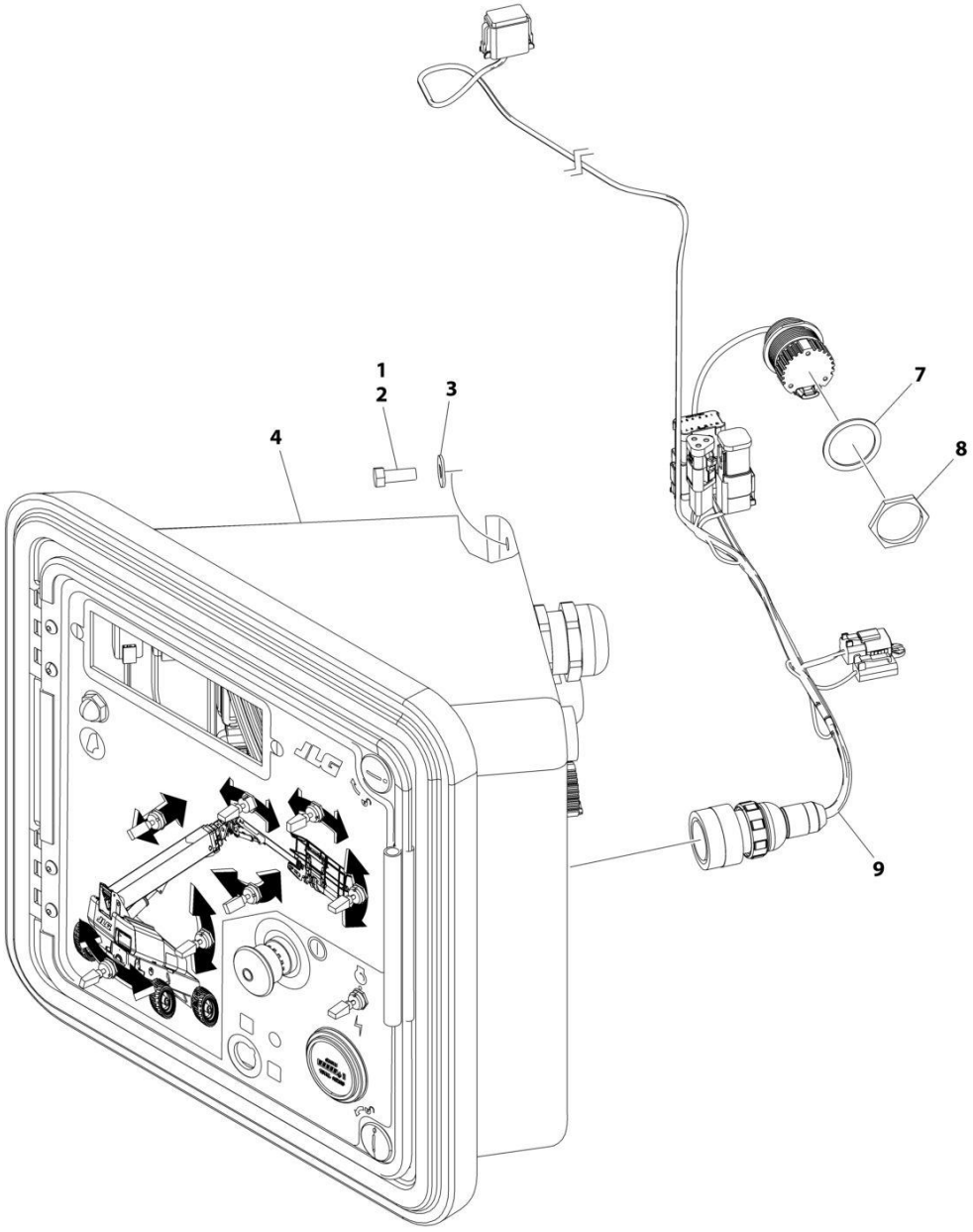

FIGURE 2-34. GROUND CONTROL BOX INSTALLATION - DEUTZ TCD2.9L4 ENGINES (ANSI, ANSI EXPORT, CSA, CHINA AND JAPANESE SPECS)

ITEM	PART NUMBER	QTY	DESCRIPTION	REV
	1001244081	Ref	GROUND CONTROL BOX INSTALLATION - DEUTZ TCD2.9L4 ENGINES	E
1	0100011	AR	Compound, Locking	
2	3931616	2	Bolt 3/8 x 3/4	
3	4751600	2	Washer 3/8	
4	1001265976	1	Ground Control Box Assembly (See Separate Breakdown in this Section)	
5	4240032	AR	Tie-Strap (Not Shown)	
6	4460234	AR	Mount, Tie-Strap (Not Shown)	
7	4460496	1	Washer, Lock	
8	4460497	1	Nut	
9	1001287275	1	Harness, Diagnostic (See Separate Breakdown in ELECTRICAL Section)	

FIGURE 2-35. GROUND CONTROL BOX INSTALLATION - DEUTZ TD2.9L4 ENGINES WITH REXROTH PUMPS (ANSI EXPORT AND AUSTRALIAN SPECS)

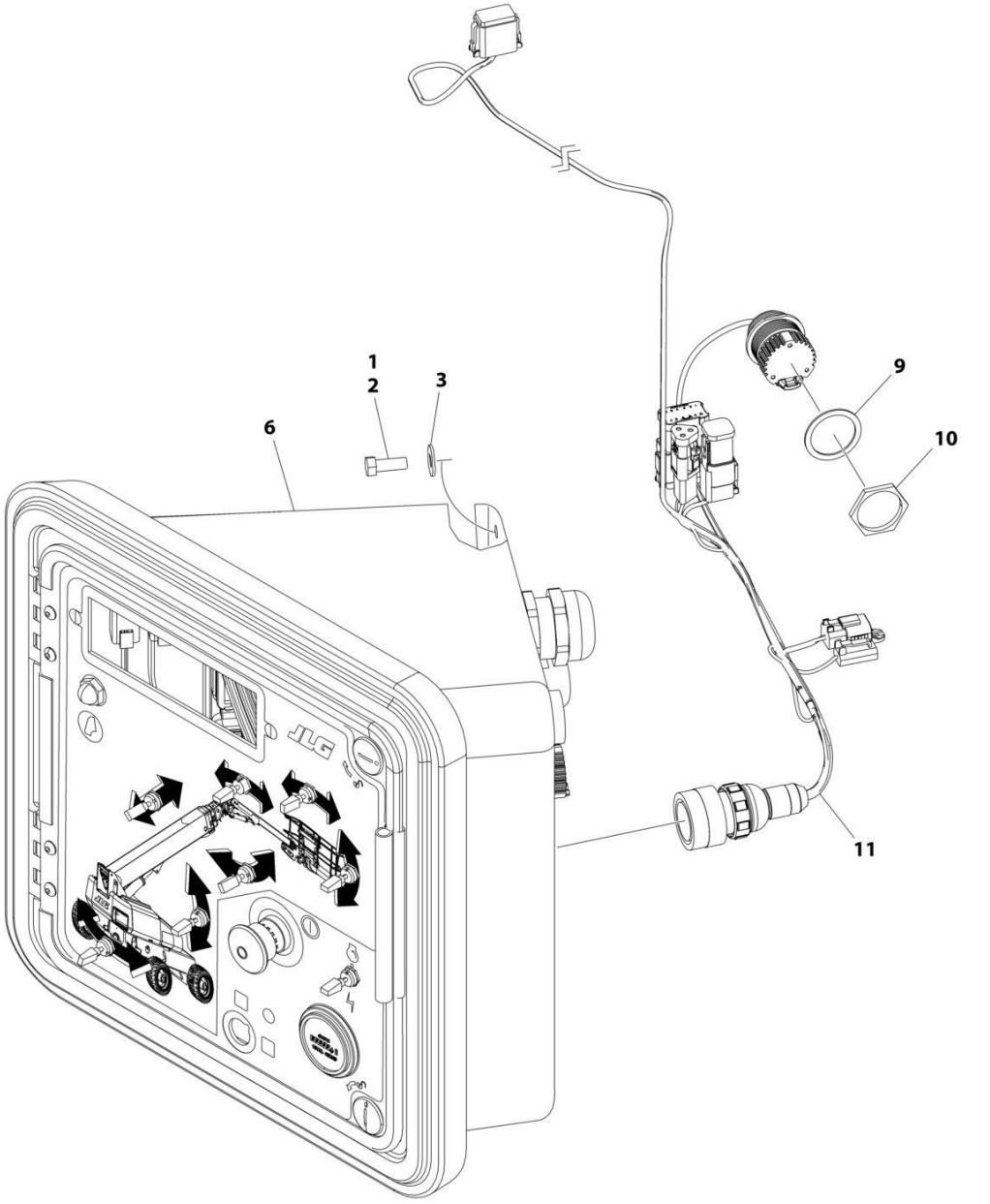

FIGURE 2-35. GROUND CONTROL BOX INSTALLATION - DEUTZ TD2.9L4 ENGINES WITH REXROTH PUMPS (ANSI EXPORT AND AUSTRALIAN SPECS)

ITEM	PART NUMBER	QTY	DESCRIPTION	REV
	1001244082	Ref	GROUND CONTROL BOX INSTALLATION - DEUTZ TD2.9L4 ENGINES WITH REXROTH PUMPS	E
1	0100011	AR	Compound, Locking	
2	3931616	2	Bolt 3/8 x 3/4	
3	4751600	2	Washer 3/8	
4	1001119456	2	Harness, Pump Adapter (Not Shown) (See Separate Breakdown in ELECTRICAL Section)	
5	1001119470	1	Harness, Engine (Not Shown) (See Separate Breakdown in ELECTRICAL Section)	
6	1001265976	1	Ground Control Box Assembly (See Separate Breakdown in this Section)	
7	4240032	AR	Tie-Strap (Not Shown)	
8	4460234	AR	Mount, Tie-Strap (Not Shown)	
9	4460496	1	Washer, Lock	
10	4460497	1	Nut	
11	1001287275	1	Harness, Diagnostic (See Separate Breakdown in ELECTRICAL Section)	

FIGURE 2-36. GROUND CONTROL BOX INSTALLATION - DEUTZ TD2.9L4 ENGINES WITH SAUER PUMPS (ANSI EXPORT AND AUSTRALIAN SPECS)

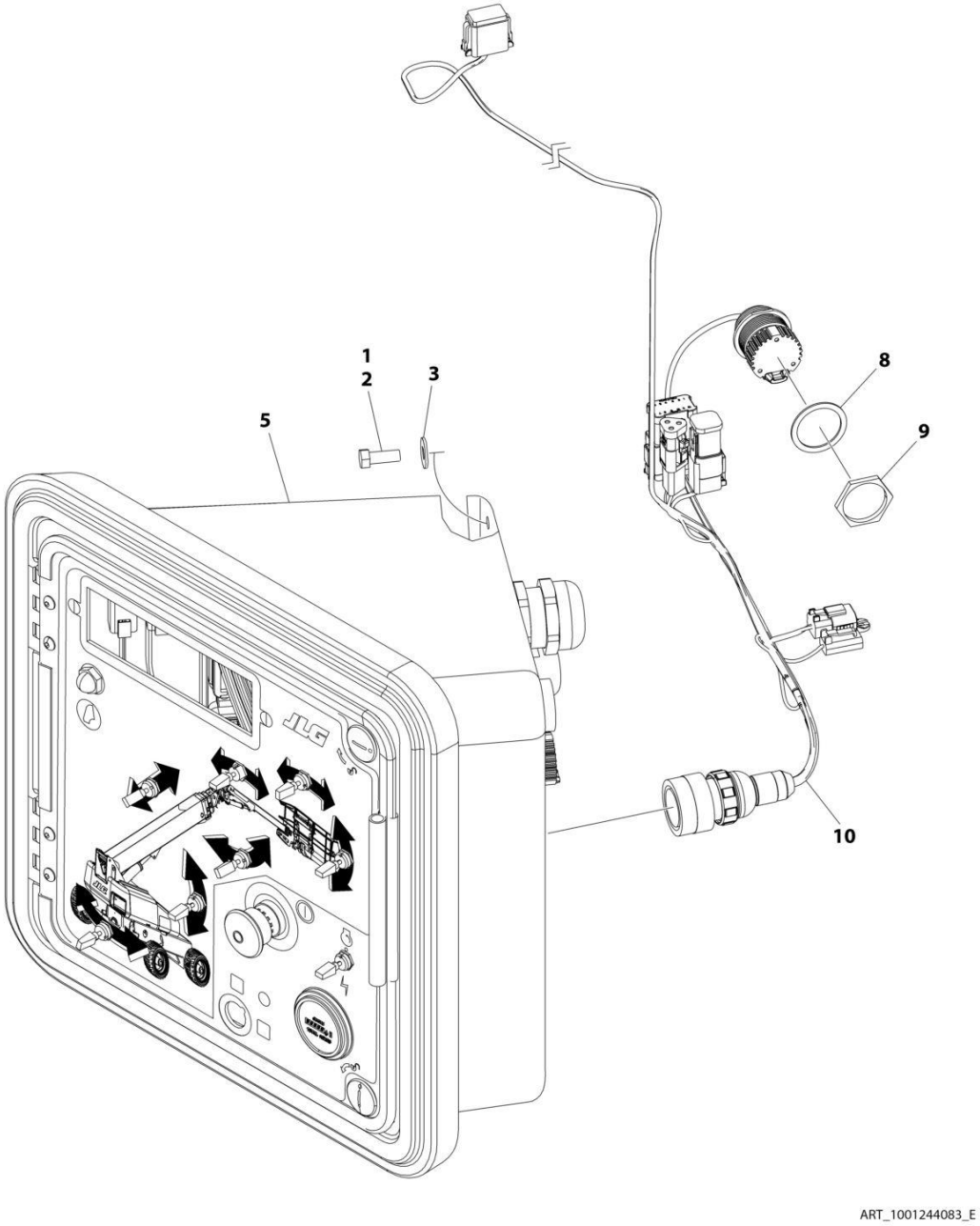

FIGURE 2-36. GROUND CONTROL BOX INSTALLATION - DEUTZ TD2.9L4 ENGINES WITH SAUER PUMPS (ANSI EXPORT AND AUSTRALIAN SPECS)

ITEM	PART NUMBER	QTY	DESCRIPTION	REV
	1001244083	Ref	GROUND CONTROL BOX INSTALLATION - DEUTZ TD2.9L4 ENGINES WITH SAUER PUMPS	E
1	0100011	AR	Compound, Locking	
2	3931616	2	Bolt 3/8 x 3/4	
3	4751600	2	Washer 3/8	
4	1001119470	1	Harness, Engine (Not Shown) (See Separate Breakdown in ELECTRICAL Section)	
5	1001265976	1	Ground Control Box Assembly (See Separate Breakdown in this Section)	
6	4240032	AR	Tie-Strap (Not Shown)	
7	4460234	AR	Mount, Tie-Strap (Not Shown)	
8	4460496	1	Washer, Lock	
9	4460497	1	Nut	
10	1001287275	1	Harness, Diagnostic (See Separate Breakdown in ELECTRICAL Section)	

FIGURE 2-37. GROUND CONTROL BOX INSTALLATION - DEUTZ TCD2.9L4 ENGINES (STAGE V)

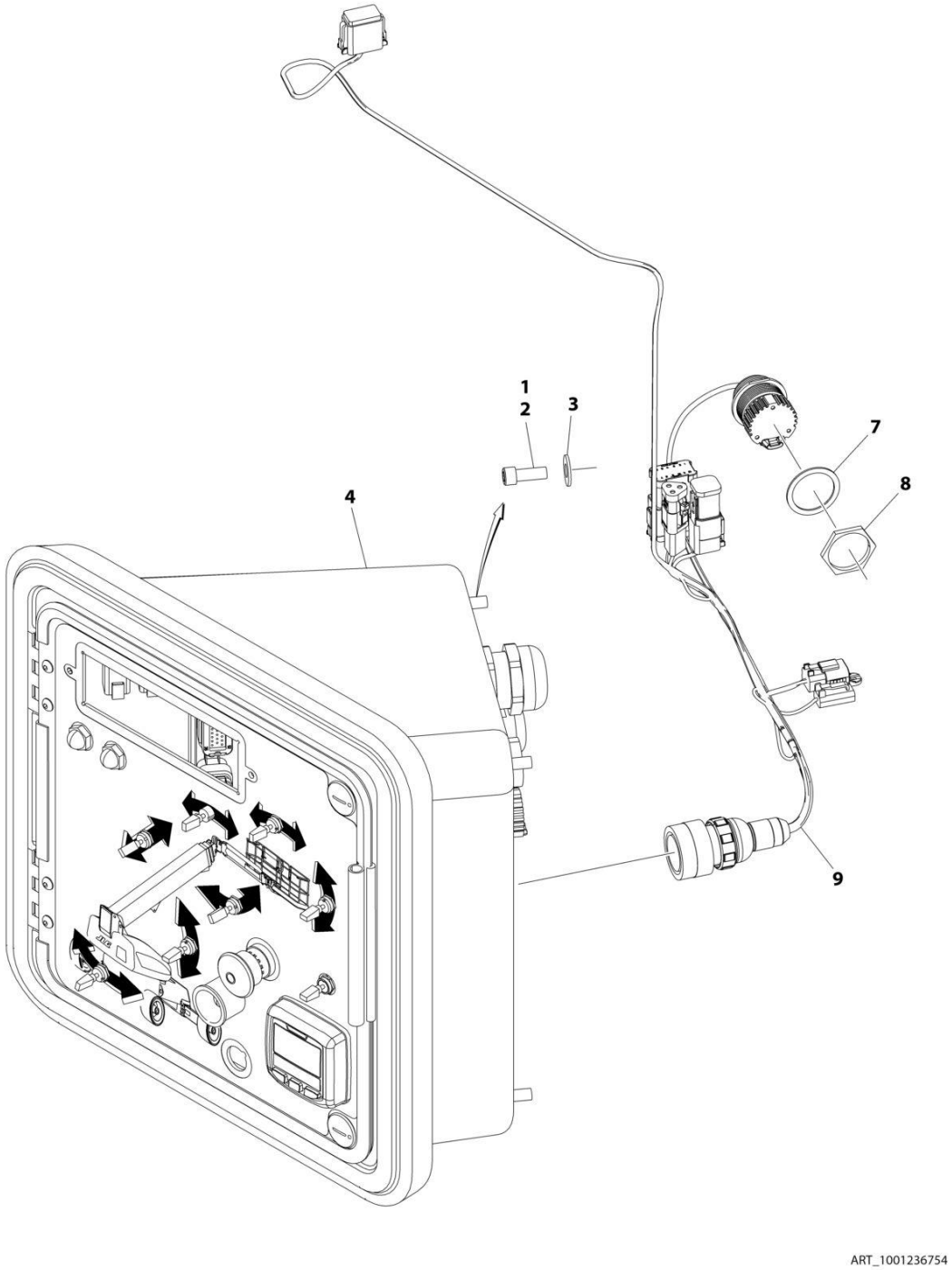

FIGURE 2-37. GROUND CONTROL BOX INSTALLATION - DEUTZ TCD2.9L4 ENGINES (STAGE V)

ITEM	PART NUMBER	QTY	DESCRIPTION	REV
	1001236754	Ref	GROUND CONTROL BOX INSTALLATION - DEUTZ TCD2.9L4 ENGINES	E
1	0100011	AR	Compound, Locking	
2	3931616	2	Bolt 3/8 x 3/4	
3	4751600	2	Washer 3/8	
4	1001266350	1	Ground Control Box Assembly (See Separate Breakdown in this Section)	
5	4240032	AR	Tie-Strap (Not Shown)	
6	4460234	AR	Mount, Tie-Strap (Not Shown)	
7	4460496	1	Washer, Lock	
8	4460497	1	Nut	
9	1001287275	1	Harness, Diagnostic (See Separate Breakdown in ELECTRICAL Section)	

FIGURE 2-38. GROUND CONTROL BOX INSTALLATION - DEUTZ TCD2.9L4 ENGINES (CHINA IV)

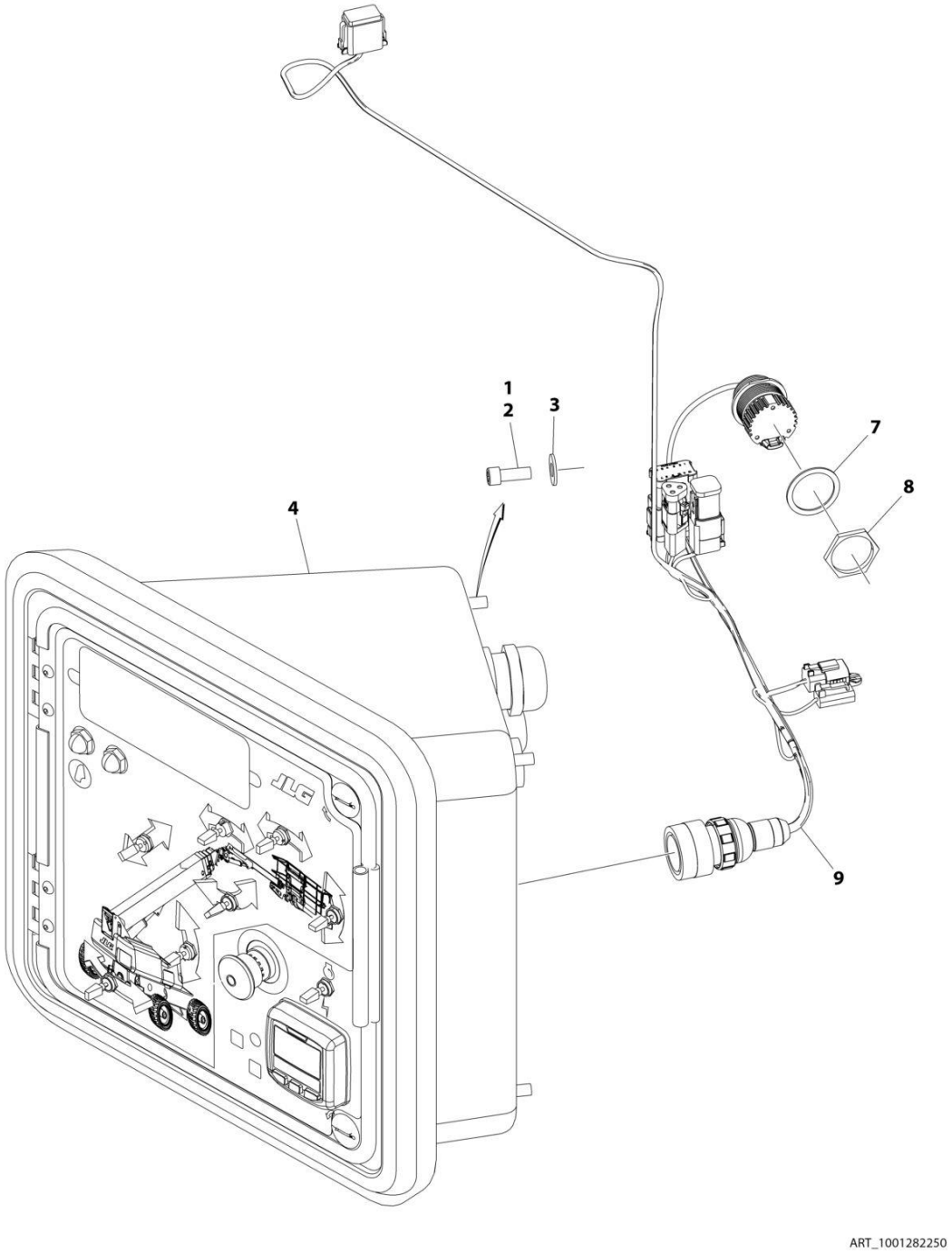

FIGURE 2-38. GROUND CONTROL BOX INSTALLATION - DEUTZ TCD2.9L4 ENGINES (CHINA IV)

ITEM	PART NUMBER	QTY	DESCRIPTION	REV
	1001282250	Ref	GROUND CONTROL BOX INSTALLATION	B
1	0100011	AR	Compound, Locking	
2	3931616	2	Bolt 3/8 x 3/4	
3	4751600	2	Washer 3/8	
4	1001282249	1	Ground Control Box Assembly (See Separate Breakdown in this Section)	
5	4240032	AR	Tie-Strap (Not Shown)	
6	4460234	AR	Mount, Tie-Strap (Not Shown)	
7	4460496	1	Washer, Lock	
8	4460497	1	Nut	
9	1001287275	1	Harness, Diagnostic (See Separate Breakdown in ELECTRICAL Section)	

FIGURE 2-39. GROUND CONTROL BOX INSTALLATION - DEUTZ TCD2.9L4 ENGINES (LRC)

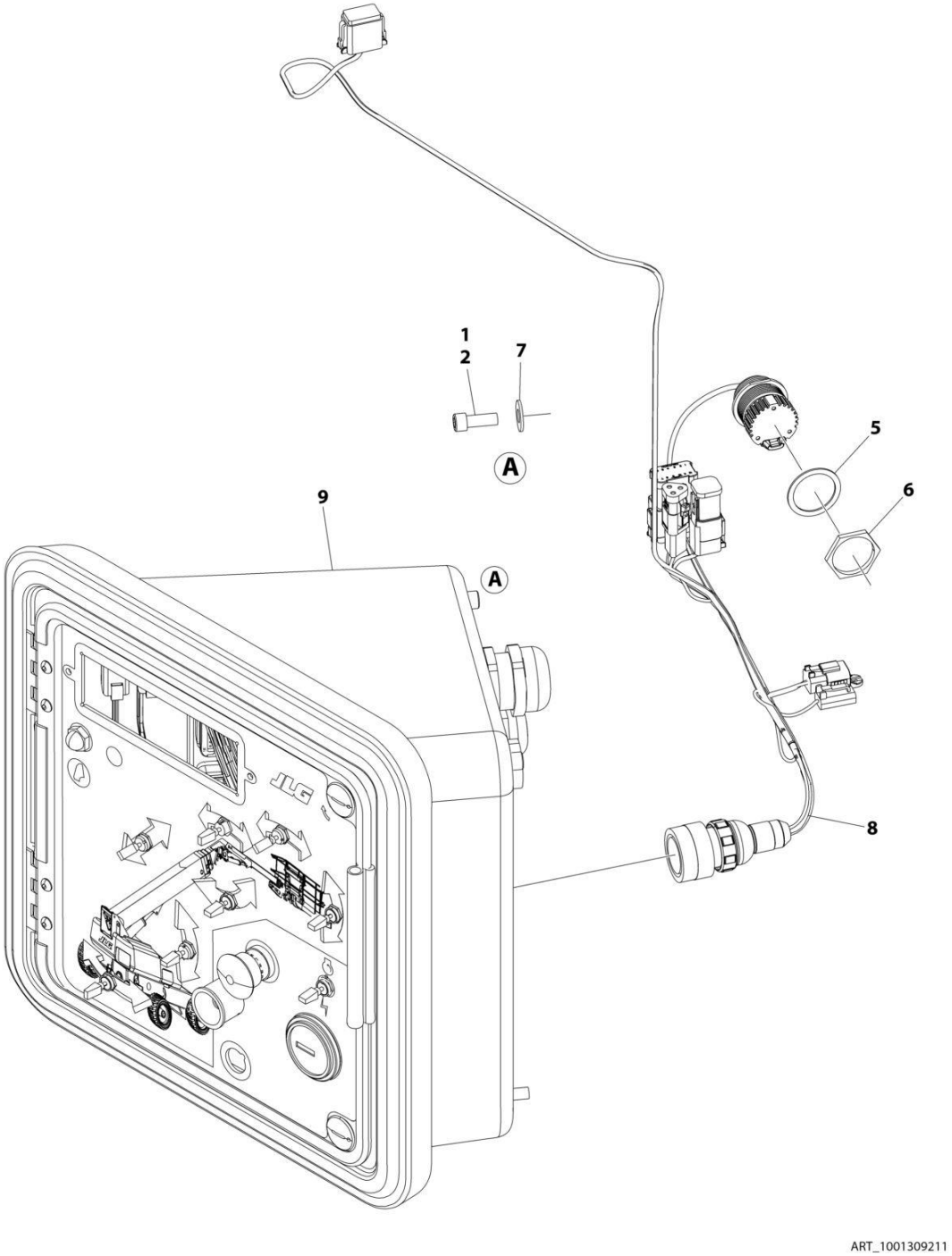

FIGURE 2-39. GROUND CONTROL BOX INSTALLATION - DEUTZ TCD2.9L4 ENGINES (LRC)

ITEM	PART NUMBER	QTY	DESCRIPTION	REV
	1001309211	Ref	GROUND CONTROL BOX INSTALLATION (LRC)	A
1	0100011	AR	Compound, Locking	
2	3931616	2	Bolt 3/8 x 1	
3	4240032	AR	Tie-Strap (Not Shown)	
4	4460234	AR	Mount, Tie-Strap (Not Shown)	
5	4460496	1	Washer, Terminal	
6	4460497	1	Nut, Terminal	
7	4751600	2	Washer 3/8	
8	1001287275	1	Harness, Diagnostic (See Separate Breakdown in ELECTRICAL Section)	
9	1001309213	1	Ground Control Box Assembly (See Separate Breakdown in this Section)	

FIGURE 2-40. GROUND CONTROL BOX ASSEMBLY - DEUTZ TCD2.9L4 ENGINES - WITH MECHANICAL HOUR METER

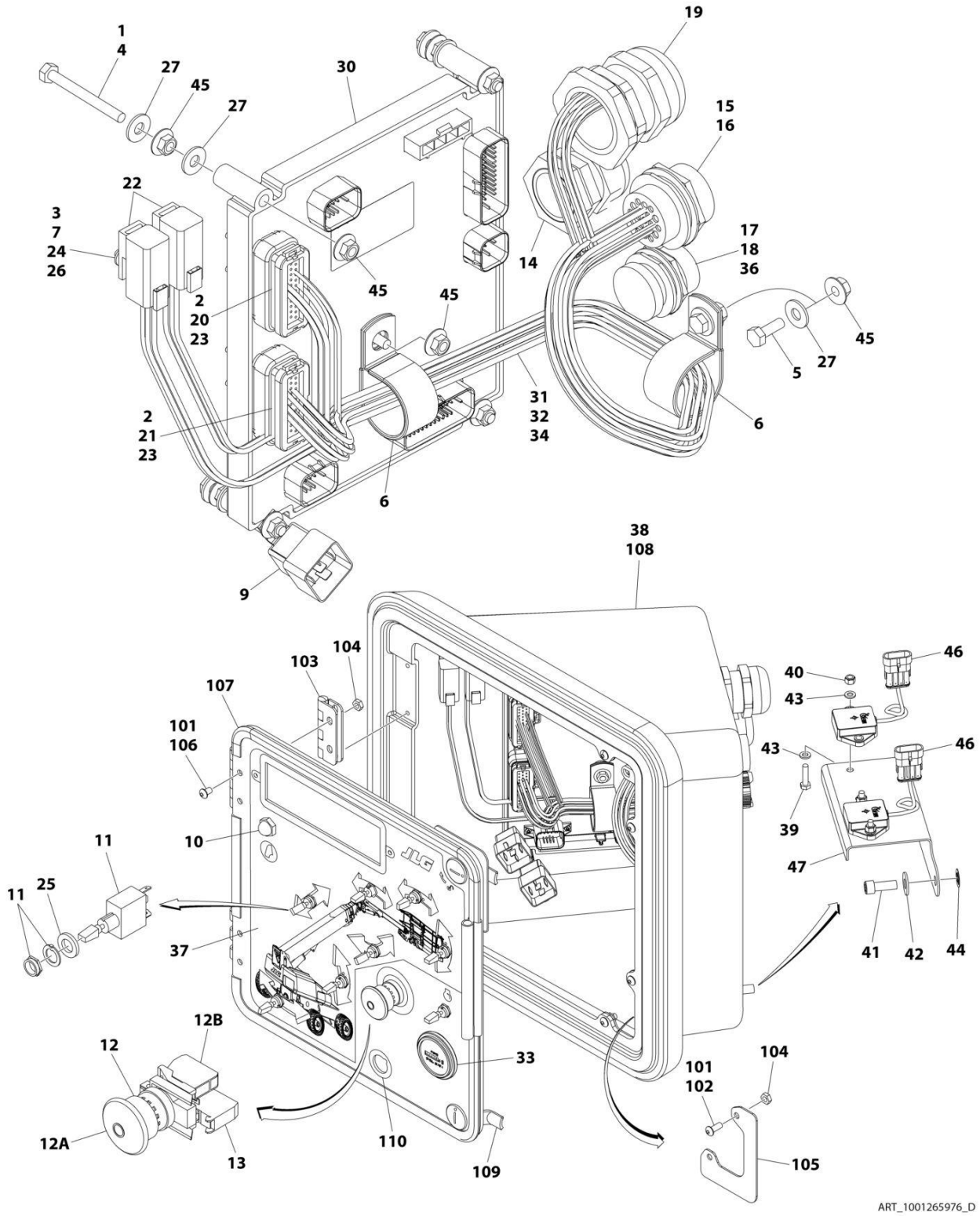

FIGURE 2-40. GROUND CONTROL BOX ASSEMBLY - DEUTZ TCD2.9L4 ENGINES - WITH MECHANICAL HOUR METER

ITEM	PART NUMBER	QTY	DESCRIPTION	REV
	1001265976	Ref	GROUND CONTROL BOX ASSEMBLY	D
1	0100011	AR	Compound, Locking	
2	0100048	AR	Grease, Dielectric	
3	0630464	2	Screw #10 x 1/2	
4	0630548	5	Screw, Self Tapping	
5	0641406	1	Bolt 1/4 x 3/4	
6	1320095	2	Clamp	
7	3311001	2	Nut #10	
9	3740049	1	Relay	
10	4360274	1	Switch, Pushbutton	
11	4360328	8	Switch, Toggle	
12	4360475	1	Switch, Push-Pull Emergency	
12A	7020175	1	Cap	
12B	7020176	1	Block, Contact	
13	4360476	1	Block, Contact	
14	4460426	1	Connector, Strain Relief	
15	4460470	1	Nut, Terminal	
16	4460471	1	Washer, Terminal	
17	4460496	1	Terminal, Washer	
18	4460497	1	Nut, Strain Relief	
19	4460526	1	Connector, Strain Relief	
20	4460874	1	Connector, White	
21	4460875	1	Connector, Gray	
22	4460892	2	Connector, Buss Bar - 6 Position	
23	4460905	9	Connector, Plug	
24	4460914	2	Base, Terminal	
25	4740397	8	Washer	
26	4751000	2	Washer #10	
27	4751400	11	Washer 1/4	
30	1001281100	1	Module, Ground Control (Note: Control System must be recalibrated when Module is replaced)	
31	1001285060	1	Harness, Valve (See Separate Breakdown in ELECTRICAL Section)	
32	1001119372	1	Harness, Ground Control Box (See Separate Breakdown in ELECTRICAL Section)	
33	10836804	1	Hour Meter	
34	1001287193	1	Harness, Ground Control Box (See Separate Breakdown in ELECTRICAL Section)	
35	1001286113	1	Wiring Diagram (Not Shown)	
36	1001285139	1	Harness, ClearSky Ready (See Separate Breakdown in ELECTRICAL Section)	
37	1001265972	1	Decal - Lid	
38	1001280411	1	Box Assembly (See Items 101-110 for Breakdown)	B
39	0760612	4	Bolt M6 x 25	
40	3290605	4	Nut M6	
41	3931616	2	Bolt 3/8 x 1	
42	4751600	2	Washer 3/8	
43	4811700	8	Washer M6	
44	8310070	2	Pushnut 3/8 x 13/16	
45	77143013	11	Nut 1/4	

SECTION 2 - TURNTABLE

ITEM	PART NUMBER	QTY	DESCRIPTION	REV
46	1001219601	2	Sensor, Tilt Dual Axis CAN	
47	1001278483	1	Bracket, Tilt Sensor	
48	1001129334	1	Harness, Jumper (Not Shown)	
48	4460871	2	Socket	
101	0100011	AR	Compound, Locking	
102	0630407	4	Screw 1/4 - 20 x 5/8	
103	2600279	2	Hing	
104	3311402	8	Nut 1/4	
105	3573144	2	Plate	
106	3900251	8	Screw 1/4 - 20 x 3/8	
107	3960418	53 in	Seal	
108	1001110064	1	Box, Main Terminal Shell	
109	1001242373	2	Latch	
110	1001280409	1	Panel, Main Terminal Box	

FIGURE 2-41. GROUND CONTROL BOX ASSEMBLY - DEUTZ TD2011 ENGINES

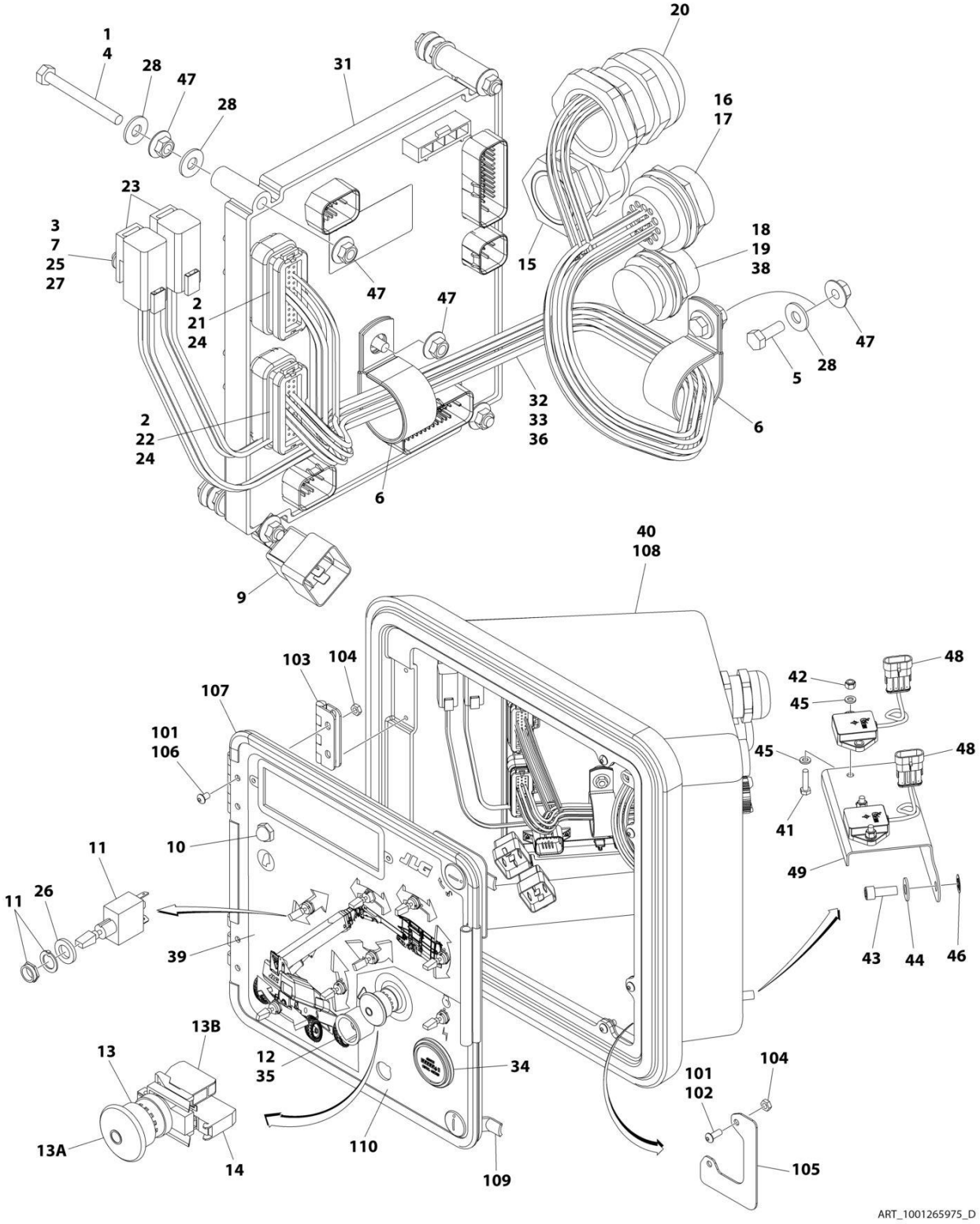

FIGURE 2-41. GROUND CONTROL BOX ASSEMBLY - DEUTZ TD2011 ENGINES

ITEM	PART NUMBER	QTY	DESCRIPTION	REV
	1001265975	Ref	GROUND CONTROL BOX ASSEMBLY	D
1	0100011	AR	Compound, Locking	
2	0100048	AR	Grease, Dielectric	
3	0630464	2	Screw #10 x 1/2	
4	0630548	5	Screw, Self Tapping	
5	0641406	1	Bolt 1/4 x 3/4	
6	1320095	2	Clamp	
7	3311001	2	Nut #10	
9	3740049	1	Relay	
10	4360274	1	Switch, Pushbutton	
11	4360328	8	Switch, Toggle	
12	4360387	1	Switch, Push Button	
13	4360475	1	Switch, Push-Pull Emergency	
13A	7020175	1	Cap	
13B	7020176	1	Block, Contact	
14	4360476	1	Block, Contact	
15	4460426	1	Connector, Strain Relief	
16	4460470	1	Nut, Terminal	
17	4460471	1	Washer, Terminal	
18	4460496	1	Terminal, Washer	
19	4460497	1	Nut, Strain Relief	
20	4460526	1	Connector, Strain Relief	
21	4460874	1	Connector, White	
22	4460875	1	Connector, Gray	
23	4460892	2	Connector, Buss Bar - 6 Position	
24	4460905	9	Connector, Plug	
25	4460914	2	Base, Terminal	
26	4740397	8	Washer	
27	4751000	2	Washer #10	
28	4751400	11	Washer 1/4	
31	1001281100	1	Module, Ground Control (Note: Control System must be recalibrated when Module is replaced)	
32	1001285060	1	Harness, Valve (See Separate Breakdown in ELECTRICAL Section)	
33	1001119372	1	Harness, Ground Control Box (See Separate Breakdown in ELECTRICAL Section)	
34	10836804	1	Gauge, Indicator	
35	1001176469	1	Shroud	
36	1001287193	1	Harness, Ground Control Box (See Separate Breakdown in ELECTRICAL Section)	
37	1001286113	1	Wiring Diagram (Not Shown)	
38	1001285139	1	Harness, ClearSky Ready (See Separate Breakdown in ELECTRICAL Section)	
39	1001265970	1	Decal - Lid	
40	1001265974	1	Box Assembly (See Items 101-110 for Breakdown)	
41	0760612	4	Bolt M6 x 25	
42	3290605	4	Nut M6	
43	3931616	2	Bolt 3/8 x 1	
44	3290605	2	Washer 3/8	
45	4811700	8	Washer M6	
46	8310070	2	Pushnut 3/8 x 13/16	

SECTION 2 - TURNTABLE

ITEM	PART NUMBER	QTY	DESCRIPTION	REV
47	77143013	11	Nut 1/4	
48	1001219601	2	Sensor, Tilt Dual Axis CAN	
49	1001278483	1	Bracket, Tilt Sensor	
50	1001129334	1	Harness, Jumper (Not Shown)	
50	4460871	2	Socket	
101	0100011	AR	Compound, Locking	
102	0630407	4	Screw 1/4 x 5/8	
103	2600279	2	Hinge	
104	3311402	8	Nut 1/4	
105	3573144	2	Plate, Latch	
106	3900251	8	Screw 1/4 x 3/8	
107	3960418	5 ft/2 m	Seal	
108	1001110064	1	Box	
109	1001242373	2	Latch	
110	1001265880	1	Panel	

FIGURE 2-42. GROUND CONTROL BOX ASSEMBLY - DEUTZ TCD2.9L4 STAGE V ENGINES

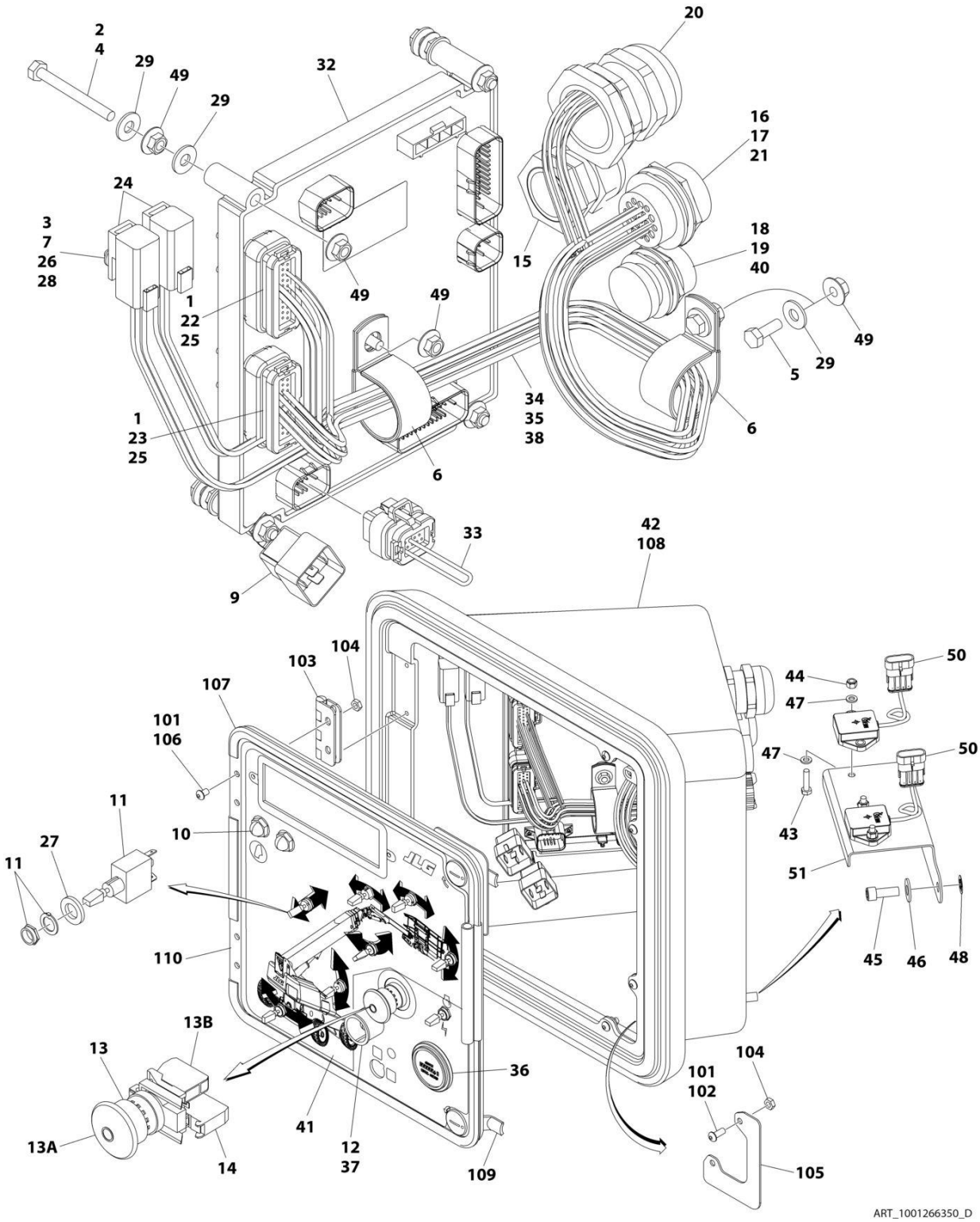

FIGURE 2-42. GROUND CONTROL BOX ASSEMBLY - DEUTZ TCD2.9L4 STAGE V ENGINES

ITEM	PART NUMBER	QTY	DESCRIPTION	REV
	1001266350	Ref	GROUND CONTROL BOX ASSEMBLY	D
1	0100048	AR	Grease, Dielectric	
2	0100011	AR	Compound, Locking	
3	0630464	2	Screw #10 x 1/2	
4	0630548	5	Screw, Self Tapping	
5	0641406	1	Bolt 1/4 x 3/4	
6	1320095	2	Clamp	
7	3311001	2	Nut #10	
9	3740049	1	Relay	
10	4360274	1	Switch, Pushbutton	
11	4360328	8	Switch, Toggle	
12	4360387	1	Switch, Push Button	
13	4360475	1	Switch, Push-Pull Emergency	
13A	7020175	1	Cap	
13B	7020176	1	Block, Contact	
14	4360476	1	Block, Contact	
15	4460426	1	Connector, Strain Relief	
16	4460470	1	Nut, Terminal	
17	4460471	1	Washer, Terminal	
18	4460496	1	Terminal, Washer	
19	4460497	1	Nut, Strain Relief	
20	4460526	1	Connector, Strain Relief	
21	4460866	1	Connector, 19 Pin	
22	4460874	1	Connector, White	
23	4460875	1	Connector, Gray	
24	4460892	2	Connector, Buss Bar - 6 Position	
25	4460905	9	Connector, Plug	
26	4460914	2	Base, Terminal	
27	4740397	8	Washer	
28	4751000	2	Washer #10	
29	4751400	11	Washer 1/4	
32	1001281100	1	Module, Ground Control (Note: Control System must be recalibrated when Module is replaced)	
33	1001113698	1	Harness, Model Selection	
34	1001285060	1	Harness, Valve (See Separate Breakdown in ELECTRICAL Section)	
35	1001119372	1	Harness, Ground Control Box (See Separate Breakdown in ELECTRICAL Section)	
36	10836804	1	Gauge, Indicator	
37	1001176469	1	Shroud	
38	1001287193	1	Harness, Ground Control Box (See Separate Breakdown in ELECTRICAL Section)	
39	1001286113	1	Wiring Diagram (Not Shown)	
40	1001285139	1	Harness, ClearSky Ready (See Separate Breakdown in ELECTRICAL Section)	
41	1001265973	1	Decal - Lid	
42	1001265974	1	Box Assembly (See Items 101-110 for Breakdown)	
43	0760612	4	Bolt M6 x 25	
44	3290605	4	Nut M6	
45	3931616	2	Bolt 3/8 x 1	
46	4751600	2	Washer 3/8	

SECTION 2 - TURNTABLE

ITEM	PART NUMBER	QTY	DESCRIPTION	REV
47	4811700	8	Washer M6	
48	8310070	2	Pushnut 3/8 x 13/16	
49	77143013	11	Nut 1/4	
50	1001219601	2	Sensor, Tilt Dual Axis CAN	
51	1001278483	1	Bracket, Tilt Sensor	
52	1001129334	1	Harness, Jumper (Not Shown)	
52	4460871	2	Socket	
101	0100011	AR	Compound, Locking	
102	0630407	4	Screw 1/4 x 5/8	
103	2600279	2	Hinge	
104	3311402	8	Nut 1/4	
105	3573144	2	Plate, Latch	
106	3900251	8	Screw 1/4 x 3/8	
107	3960418	5 ft/2 m	Seal	
108	1001110064	1	Box	
109	1001242373	2	Latch	
110	1001265880	1	Lid	

FIGURE 2-43. GROUND CONTROL BOX ASSEMBLY - DEUTZ TCD2.9L4 CHINA IV ENGINES

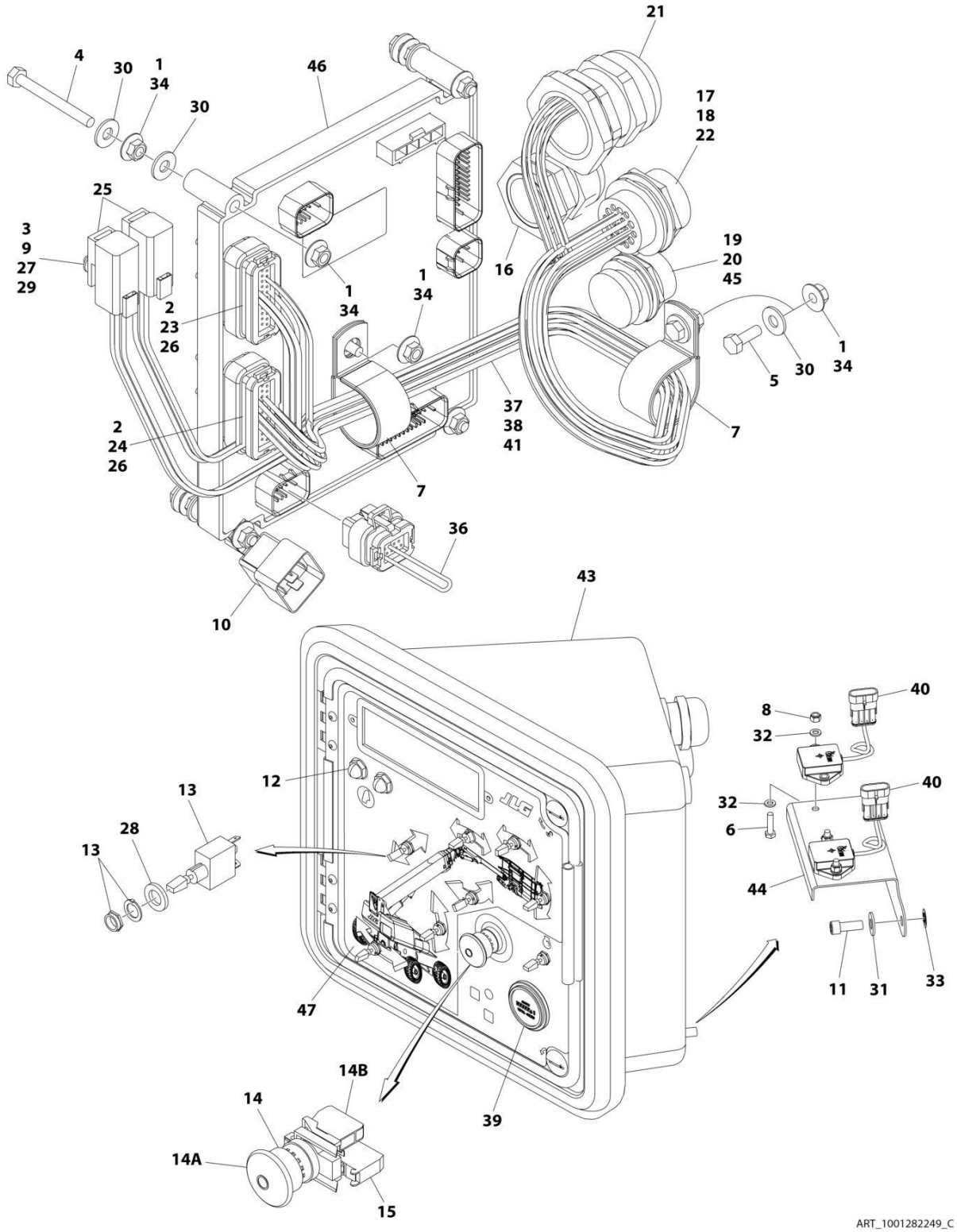

FIGURE 2-43. GROUND CONTROL BOX ASSEMBLY - DEUTZ TCD2.9L4 CHINA IV ENGINES

ITEM	PART NUMBER	QTY	DESCRIPTION	REV
	1001282249	Ref	GROUND CONTROL BOX ASSEMBLY	C
1	0100011	AR	Compound, Locking	
2	0100048	AR	Grease, Dielectric	
3	0630464	2	Screw #10 x 1/2	
4	0630548	5	Screw, Self Tapping	
5	0641406	1	Bolt 1/4 x 3/4	
6	0760612	4	Bolt M6 x 25	
7	1320095	2	Clamp	
8	3290605	4	Nut M6	
9	3311001	2	Nut #10	
10	3740049	1	Relay	
11	3931616	2	Bolt 3/8 x 1	
12	4360274	2	Switch, Pushbutton	
13	4360328	8	Switch, Toggle	
14	4360475	1	Switch, Push-Pull Emergency	
14A	7020175	1	Cap	
14B	7020176	1	Block, Contact	
15	4360476	1	Block, Contact	
16	4460426	1	Connector, Strain Relief	
17	4460470	1	Nut, Terminal	
18	4460471	1	Washer, Terminal	
19	4460496	1	Terminal, Washer	
20	4460497	1	Nut, Strain Relief	
21	4460526	1	Connector, Strain Relief	
22	4460866	1	Connector, 19 Pin	
23	4460874	1	Connector	
24	4460875	1	Connector, Gray	
25	4460892	2	Connector, Buss Bar - 6 Position	
26	4460905	9	Plug	
27	4460914	2	Base, Terminal	
28	4740397	8	Washer	
29	4751000	2	Washer #10	
30	4751400	11	Washer 1/4	
31	4751600	2	Washer 3/8	
32	4811700	8	Washer M6	
33	8310070	2	Pushnut 3/8	
34	77143013	11	Nut 1/4	
36	1001113698	1	Harness, Model Selection	
37	1001285060	1	Harness, Valve (See Separate Breakdown in ELECTRICAL Section)	
38	1001119372	1	Harness, Ground Control Box (See Separate Breakdown in ELECTRICAL Section)	
39	10836804	1	Gauge, Indicator	
40	1001219601	2	Sensor, Tilt Dual Axis CAN	
41	1001287193	1	Harness, Ground Control Box (See Separate Breakdown in ELECTRICAL Section)	
42	1001286113	1	Wiring Diagram (Not Shown)	
43	1001265974	1	Box Assembly (See Separate Breakdown in this Section)	
44	1001278483	1	Bracket, Tilt Sensor	

SECTION 2 - TURNTABLE

ITEM	PART NUMBER	QTY	DESCRIPTION	REV
45	1001285139	1	Harness, ClearSky Ready (See Separate Breakdown in ELECTRICAL Section)	
46	1001281100	1	Module, Ground Control (Note: Control System must be recalibrated when Module is replaced)	
47	1001282239	1	Decal - Terminal Box	
48	1001129334	1	Harness, Jumper (Not Shown)	
48	4460871	2	Socket	

FIGURE 2-44. GROUND CONTROL BOX ASSEMBLY - DEUTZ TCD2.9L4 ENGINES (LRC)

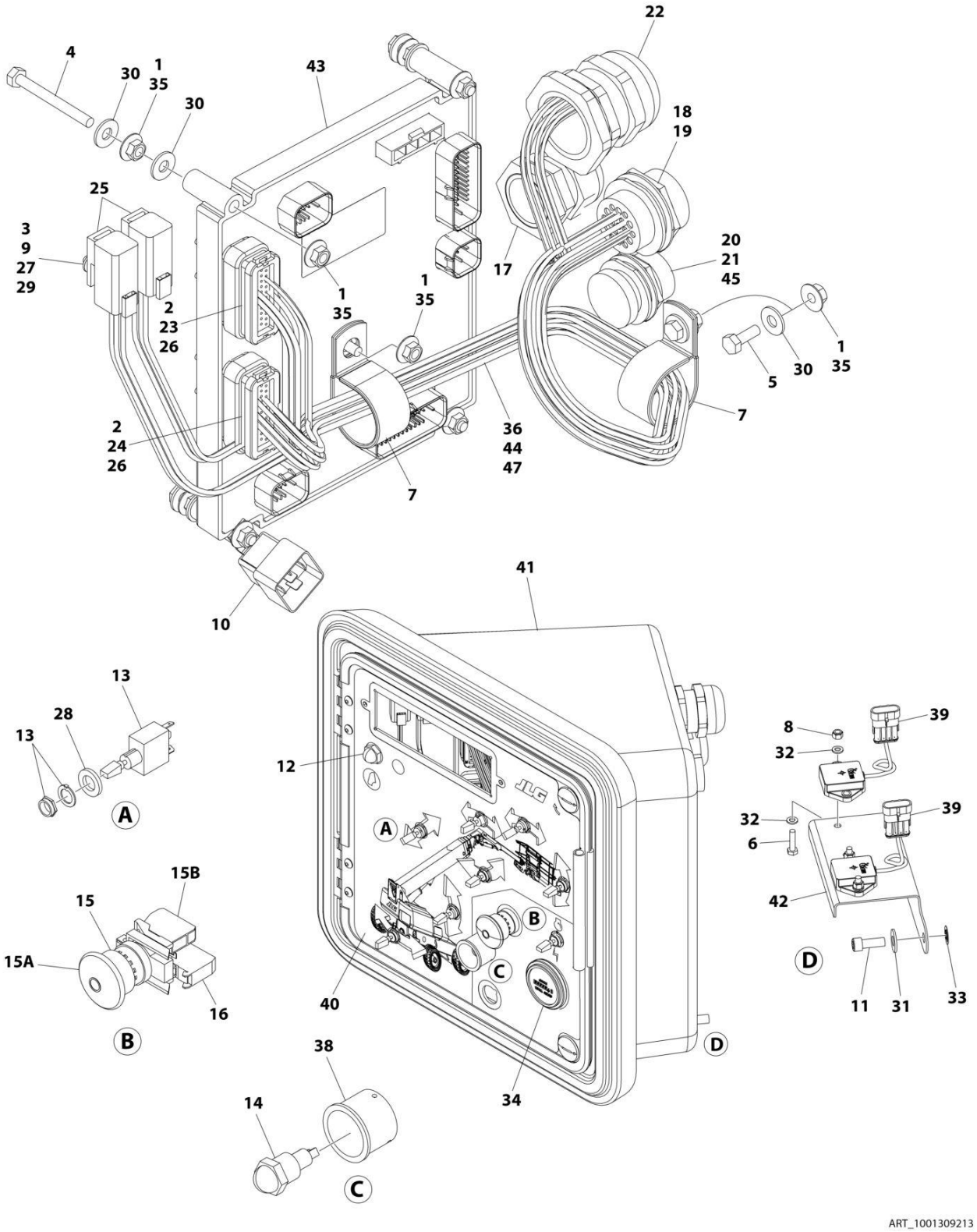

FIGURE 2-44. GROUND CONTROL BOX ASSEMBLY - DEUTZ TCD2.9L4 ENGINES (LRC)

ITEM	PART NUMBER	QTY	DESCRIPTION	REV
	1001309213	Ref	GROUND CONTROL BOX ASSEMBLY (LRC)	A
1	0100011	AR	Compound, Locking	
2	0100048	AR	Grease, Dielectric	
3	0630464	2	Screw #10 x 1/2	
4	0630548	5	Screw, Self Tapping	
5	0641406	1	Bolt 1/4 x 3/4	
6	0760612	4	Bolt M6 x 25	
7	1320095	2	Clamp	
8	3290605	4	Nut M6	
9	3311001	2	Nut #10	
10	3740049	1	Relay	
11	3931616	2	Bolt 3/8 x 1	
12	4360274	1	Switch, Pushbutton (Gray)	
13	4360328	8	Switch, Toggle	
14	4360387	1	Switch, Pushbutton (Yellow)	
15	4360475	1	Switch, Push-Pull Emergency	
15A	7020175	1	Cap	
15B	7020176	1	Block, Contact	
16	4360476	1	Block, Contact	
17	4460426	1	Connector, Strain Relief	
18	4460470	1	Nut, Terminal	
19	4460471	1	Washer, Terminal	
20	4460496	1	Washer, Terminal	
21	4460497	1	Nut, Terminal	
22	4460526	1	Connector, Strain Relief	
23	4460874	1	Connector	
24	4460875	1	Connector	
25	4460892	2	Connector, Buss Bar	
26	4460905	9	Plug	
27	4460914	2	Base, Terminal	
28	4740397	8	Spacer	
29	4751000	2	Washer #10	
30	4751400	11	Washer 1/4	
31	4751600	2	Washer 3/8	
32	4811700	8	Washer M6	
33	8310070	2	Pushnut 3/8	
34	10836804	1	Gauge, Indicator	
35	77143013	11	Nut 1/4	
36	1001119372	1	Harness, Ground Control Engine (See Separate Breakdown in ELECTRICAL Section)	
37	1001129334	1	Harness, Jumper (Not Shown)	
37	4460871	2	Socket	
38	1001176469	1	Shroud	
39	1001219601	2	Sensor, Tilt Dual Axis CAN	
40	1001265970	1	Decal - Terminal Box	
41	1001265974	1	Box Assembly (See Separate Breakdown in this Section)	
42	1001278483	1	Bracket	
43	1001281100	1	Module, Ground Control (Note: Control System must be recalibrated when Module is replaced)	

SECTION 2 - TURNTABLE

ITEM	PART NUMBER	QTY	DESCRIPTION	REV
44	1001285060	1	Harness, Valve (See Separate Breakdown in ELECTRICAL Section)	
45	1001285139	1	Harness, ClearSky Ready (See Separate Breakdown in ELECTRICAL Section)	
46	1001286113	1	Wiring Diagram (Not Shown)	
47	1001287193	1	Harness, Ground Control Box (See Separate Breakdown in ELECTRICAL Section)	

FIGURE 2-45. GROUND CONTROL PANEL ASSEMBLY

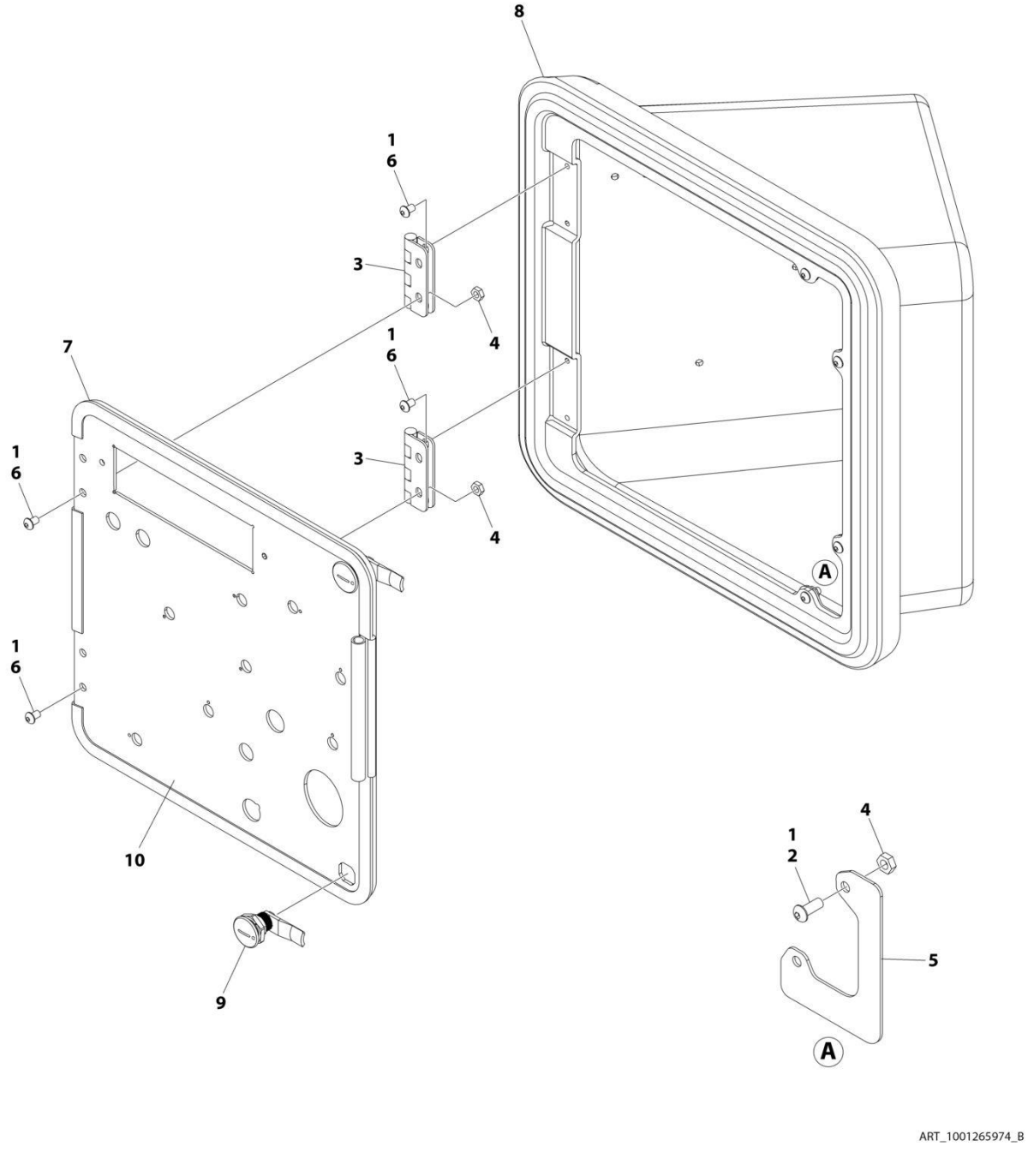

FIGURE 2-45. GROUND CONTROL PANEL ASSEMBLY

ITEM	PART NUMBER	QTY	DESCRIPTION	REV
	1001265974	Ref	BOX ASSEMBLY	B
1	0100011	AR	Compound, Locking	
2	0630407	4	Screw 1/4 x 5/8	
3	2600279	2	Hinge	
4	3311402	8	Nut 1/4	
5	3573144	2	Plate, Latch	
6	3900251	8	Screw 1/4 x 3/8	
7	3960418	5 ft/2 m	Seal	
8	1001110064	1	Box	
9	1001242373	2	Latch	
10	1001297394	1	Lid	

FIGURE 2-46. KEYSWITCH INSTALLATION

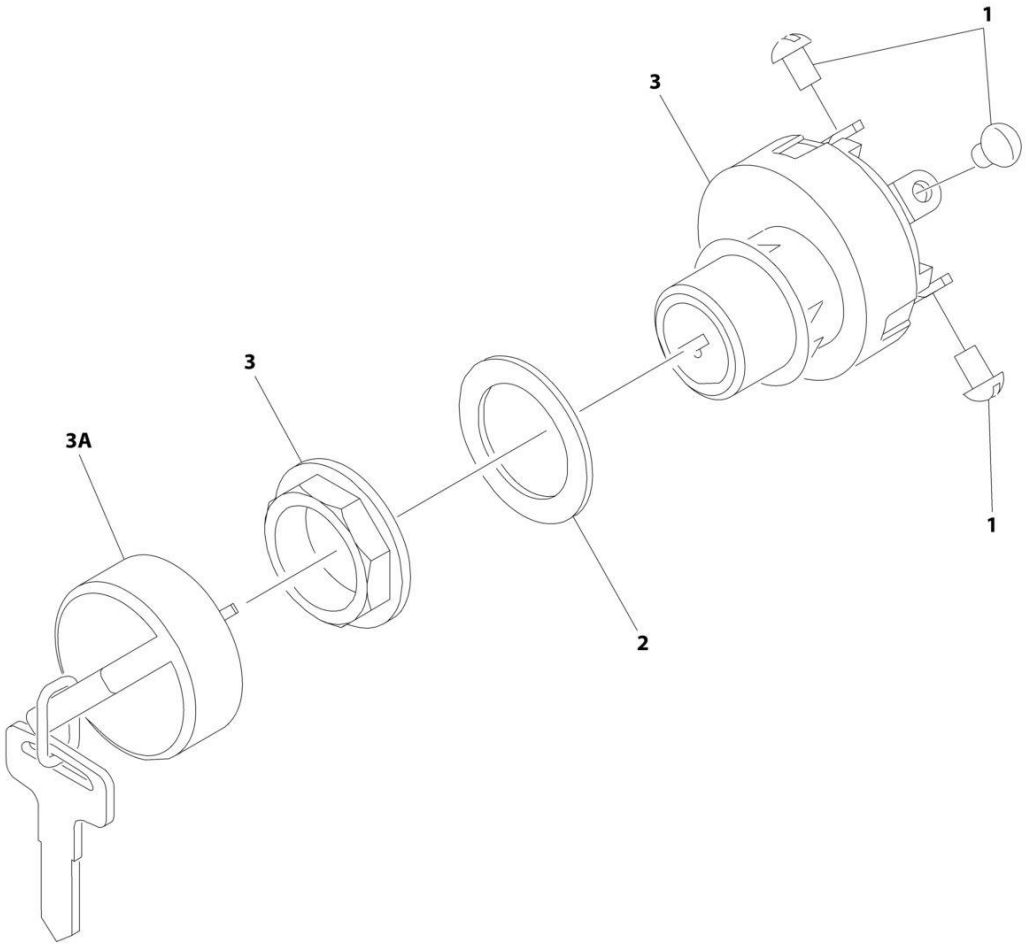

FIGURE 2-46. KEYSWITCH INSTALLATION

ITEM	PART NUMBER	QTY	DESCRIPTION	REV
	0259666	Ref	KEYSWITCH INSTALLATION	B
1	3910804	6	Screw #8 x 1/8	
2	1001151393	1	Shim .063	
3	4360469	1	Keyswitch	
3A	2860030	1	Key, Replacement	

FIGURE 2-47. LIGHT PANEL INSTALLATION (MACHINES WITH SN STARTING WITH 03)

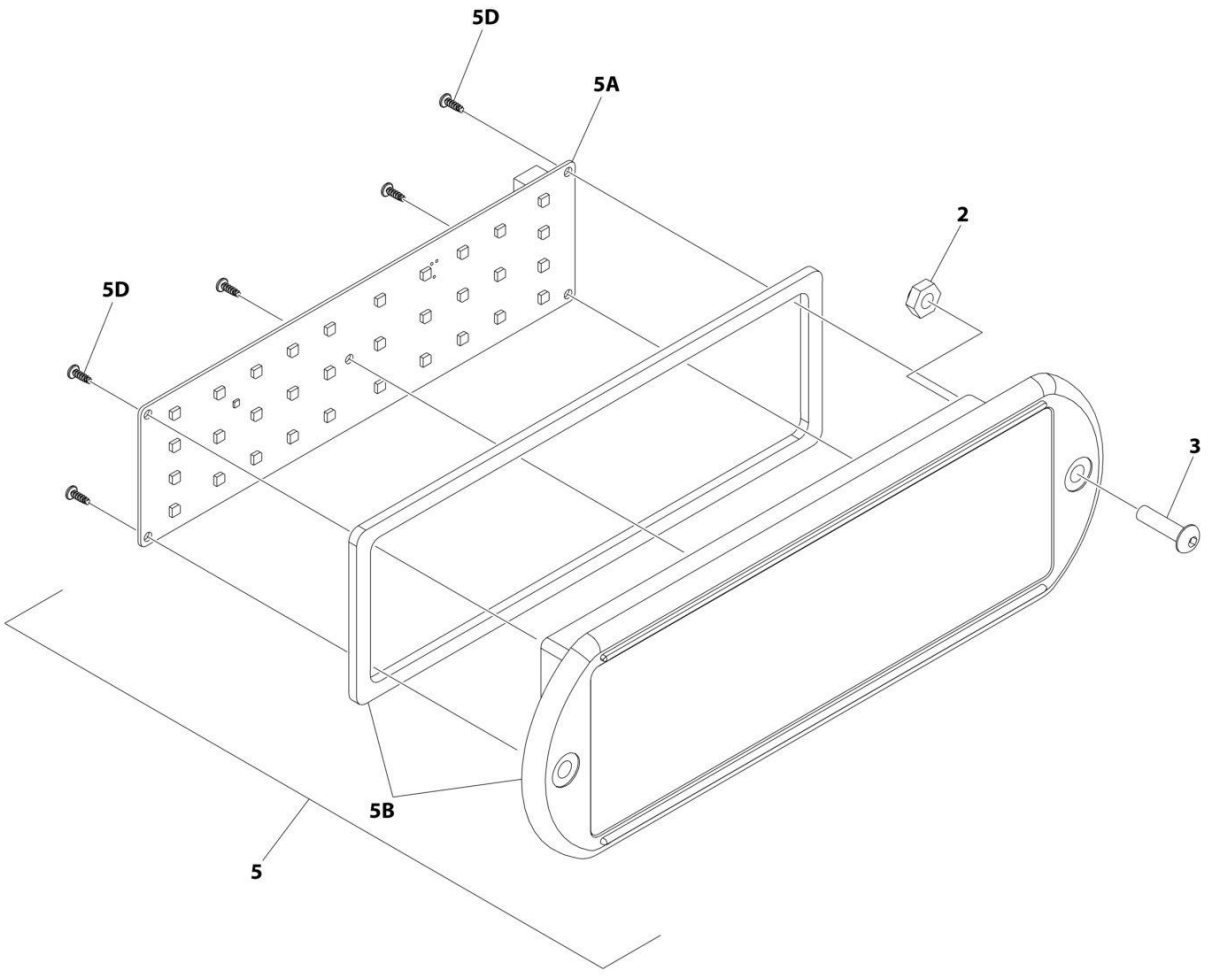

FIGURE 2-47. LIGHT PANEL INSTALLATION (MACHINES WITH SN STARTING WITH 03)

ITEM	PART NUMBER	QTY	DESCRIPTION	REV
	1001233959	Ref	LIGHT PANEL INSTALLATION	D
2	3300408	2	Nut, Nylon Insert	
3	0630518	2	Screw #10 x 3/4	
5	1001237546	1	Light Panel Assembly	J
5A	1001282106	1	Panel, LED Light	
5B	1001236091	1	Lens, Icon (Includes Gasket)	
5D		Ref	Screw	

FIGURE 2-48. LIGHT PANEL INSTALLATION (MACHINES WITH SN STARTING WITH B3)

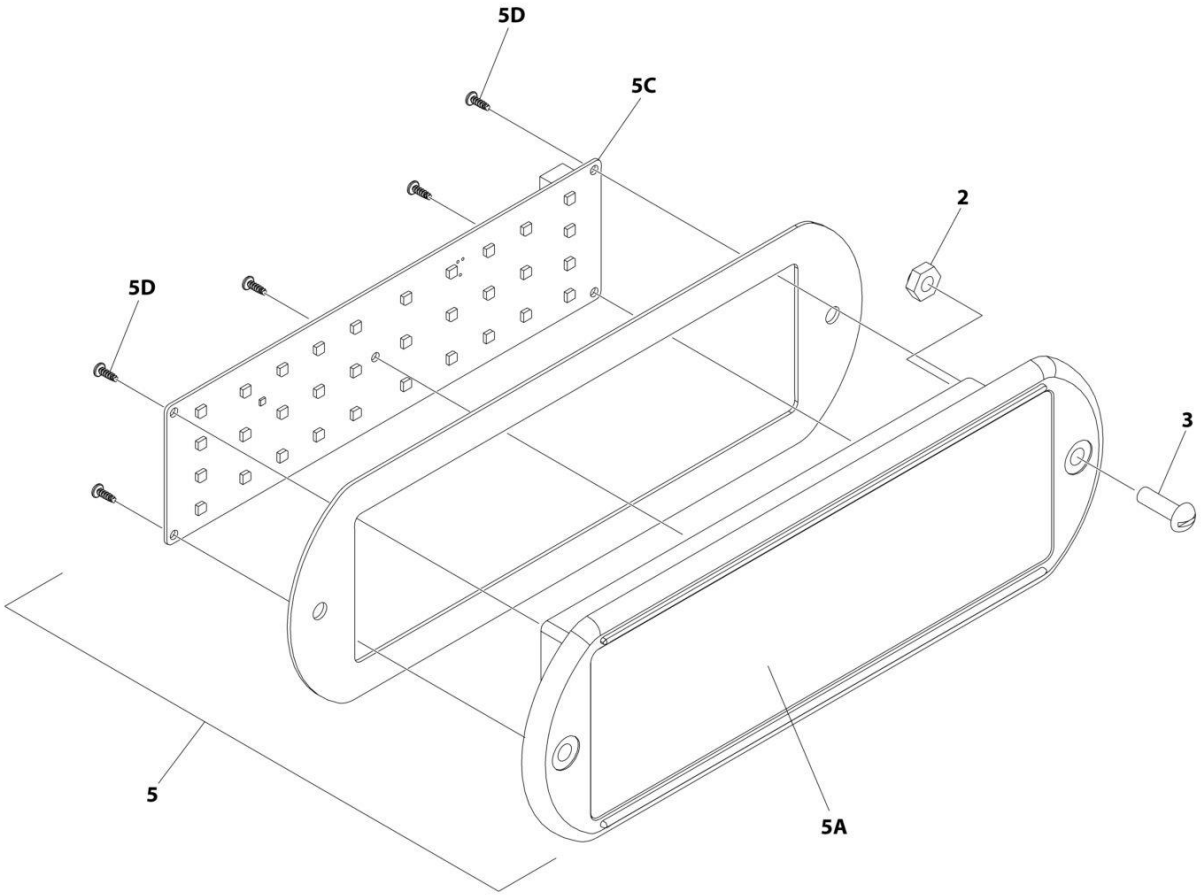

FIGURE 2-48. LIGHT PANEL INSTALLATION (MACHINES WITH SN STARTING WITH B3)

ITEM	PART NUMBER	QTY	DESCRIPTION	REV
	1001241398	Ref	LIGHT PANEL INSTALLATION	B
2	3300408	2	Nut, Nylon Insert	
3	3911010	2	Screw #10 x 5/8	
5	1001238673	1	Light Panel Assembly	
5A	1001236091	1	Lens, I-Con	
5C	1001238732	1	Panel, LED Light	
5D		Ref	Screw	

FIGURE 2-49. ALARM INSTALLATION

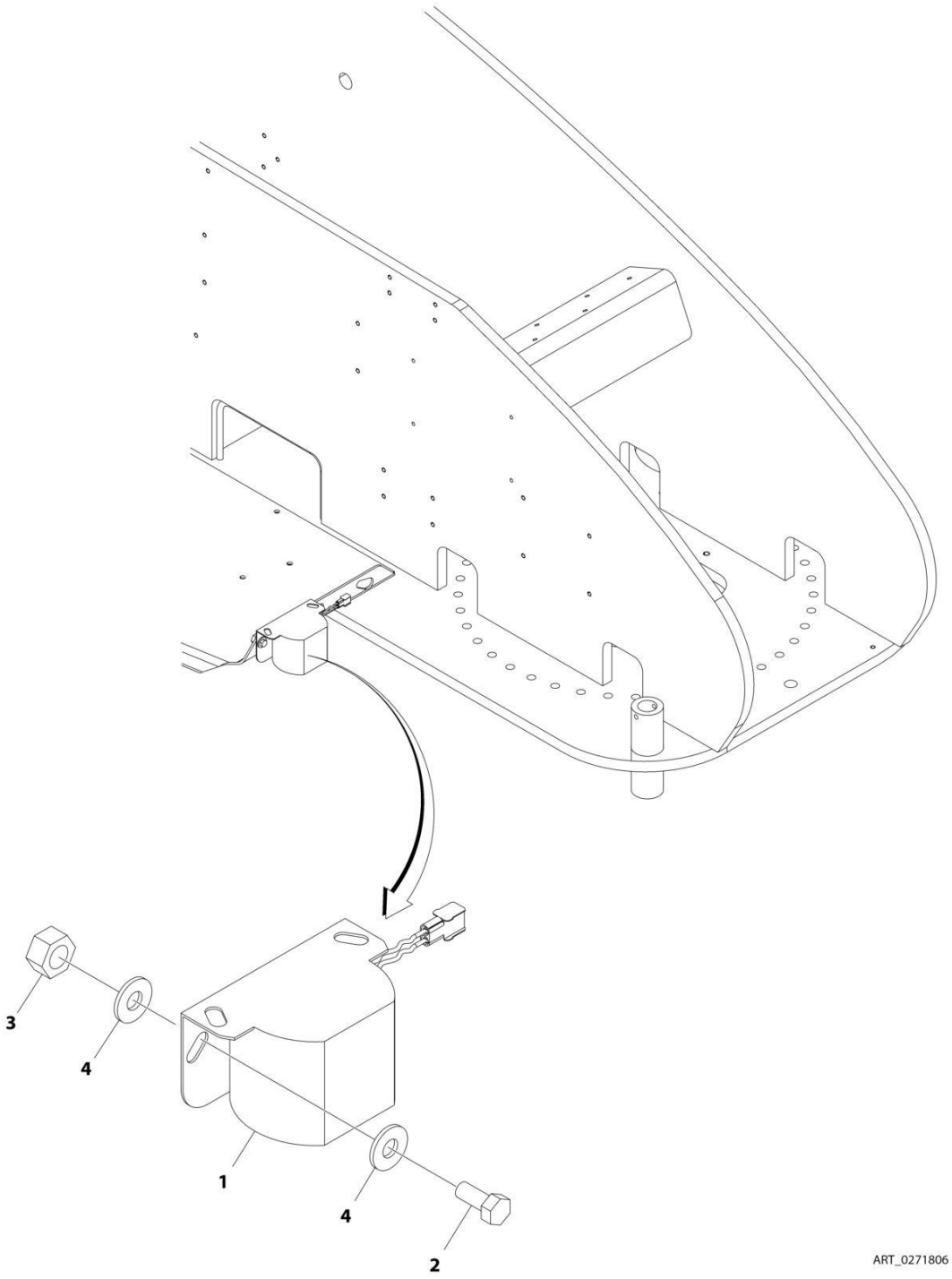

FIGURE 2-49. ALARM INSTALLATION

ITEM	PART NUMBER	QTY	DESCRIPTION	REV
	0271806	Ref	ALARMS INSTALLATION	A
1	0257887	1	Alarm	
1	0140032	1	Alarm	
1	2820035	6 in/15cm	Loom	
1	4460424	1	Plug	
1	4460268	2	Socket, Female	
2	0641506	2	Bolt 5/16 x 3/4	
3	3311505	2	Nut 5/16	
4	4751500	4	Washer 5/16	

FIGURE 2-50. ALARM AMBIENT (WHITE NOISE) INSTALLATION (ALARM WITH HORIZONTAL BAR GRILLE)

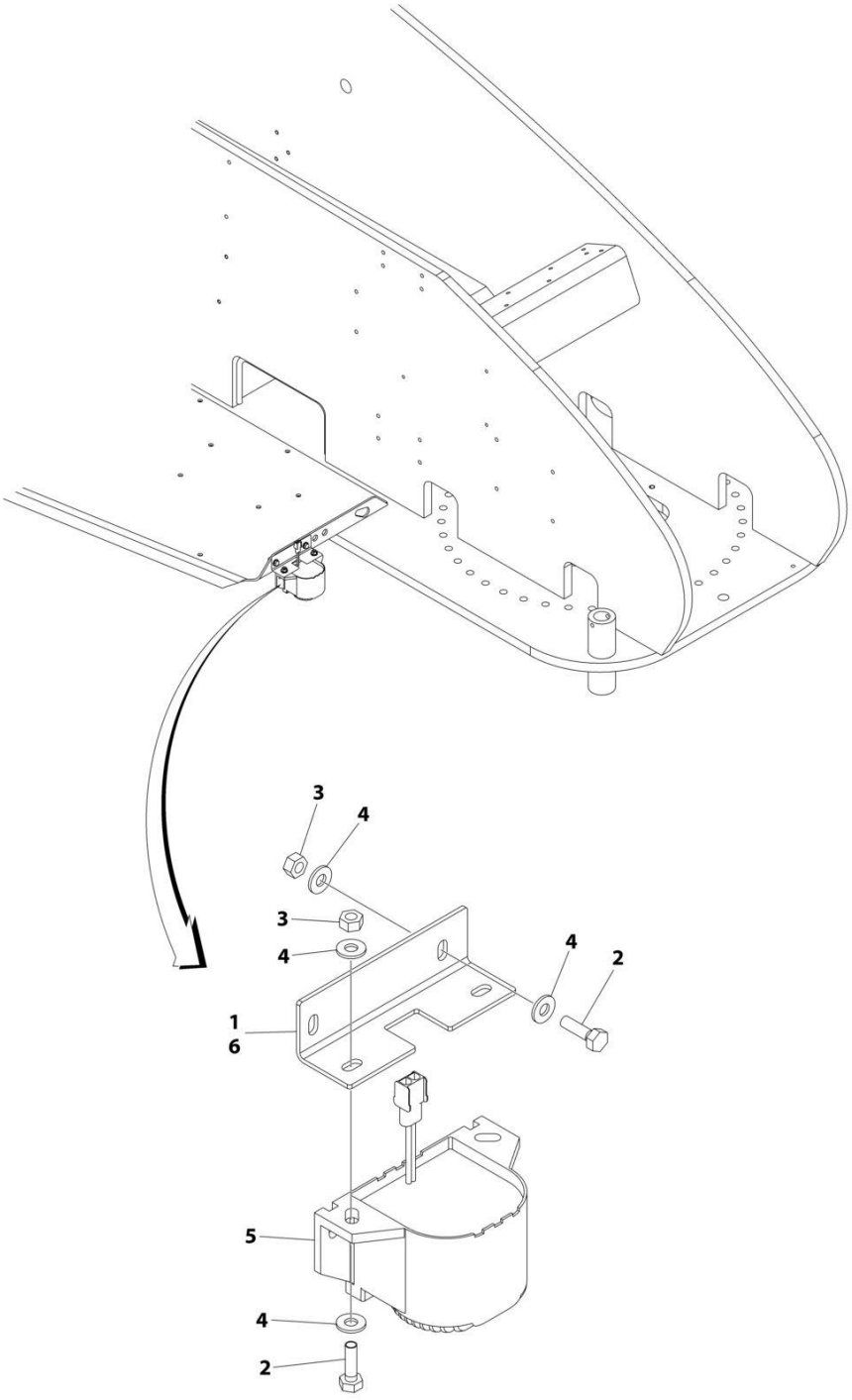

FIGURE 2-50. ALARM AMBIENT (WHITE NOISE) INSTALLATION (ALARM WITH HORIZONTAL BAR GRILLE)

ITEM	PART NUMBER	QTY	DESCRIPTION	REV
	1001241383	Ref	ALARM AMBIENT (WHITE NOISE) INSTALLATION	A
1	0100048	AR	Grease, Dielectric	
2	0641407	4	Bolt 1/4 x 7/8	
3	3311405	4	Nut 1/4	
4	4711400	8	Washer 1/4	
5	1001243731	1	Alarm	
5	1001182806	1	Alarm	
5	4460424	1	Plug	
5	4460268	2	Socket, Female	
6	1001243849	1	Plate	

FIGURE 2-51. ALARM AMBIENT (WHITE NOISE) INSTALLATION (ALARM WITH CROSS HATCH GRILLE)

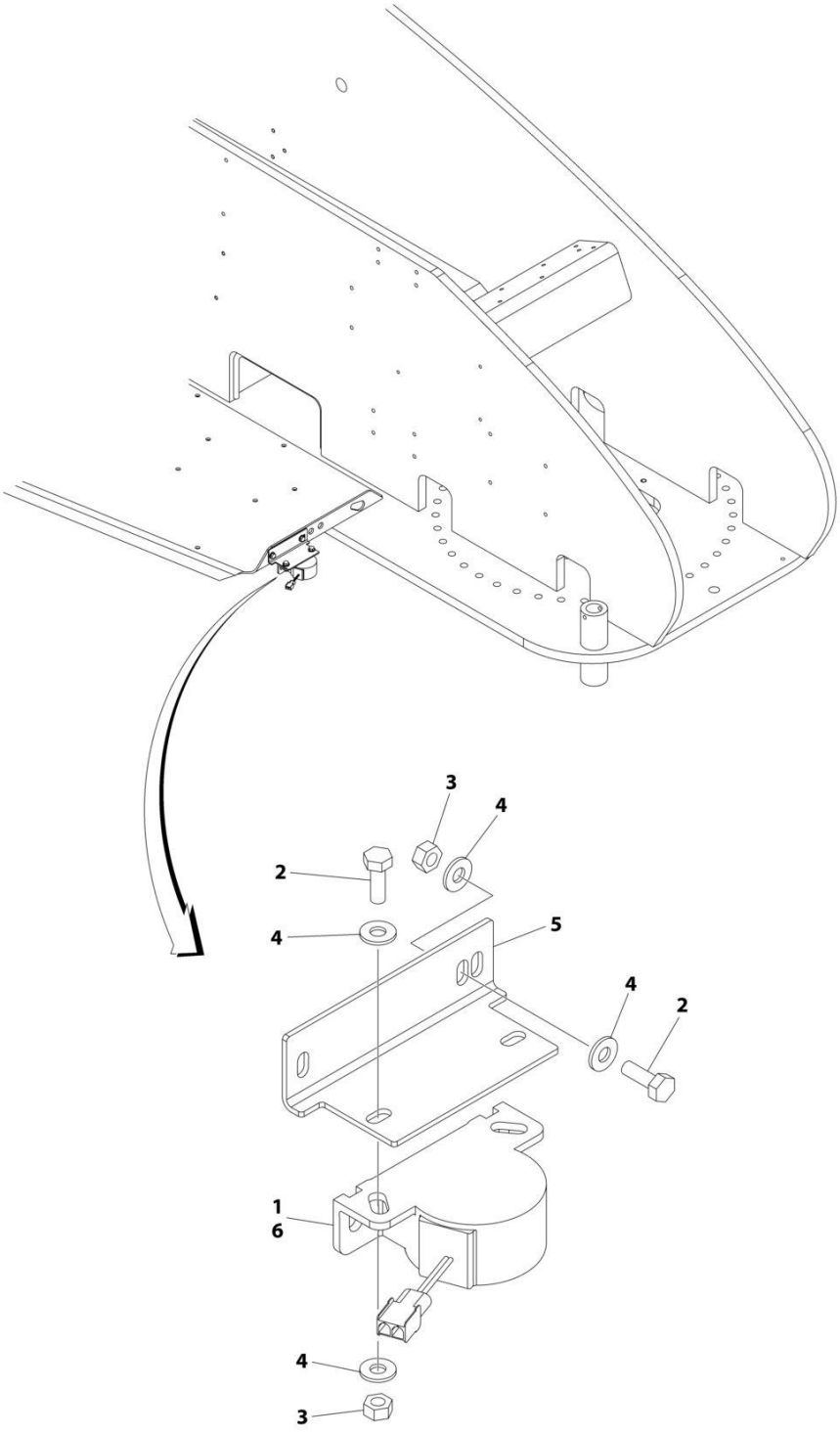

FIGURE 2-51. ALARM AMBIENT (WHITE NOISE) INSTALLATION (ALARM WITH CROSS HATCH GRILLE)

ITEM	PART NUMBER	QTY	DESCRIPTION	REV
	1001239281	Ref	BACKUP ALARM (WHITE NOISE) INSTALLATION	A
1	0100048	AR	Grease, Dielectric	
2	0641406	4	Bolt 1/4 x 3/4	
3	3311405	4	Nut 1/4	
4	4711400	8	Washer 1/4	
5	1001231886	1	Plate	
6	1001243734	1	Alarm	
6	1001184682	1	Alarm	
6	4460424	1	Plug	
6	4460268	2	Socket, Female	

FIGURE 2-52. STROBE LIGHT INSTALLATION (AMBER)

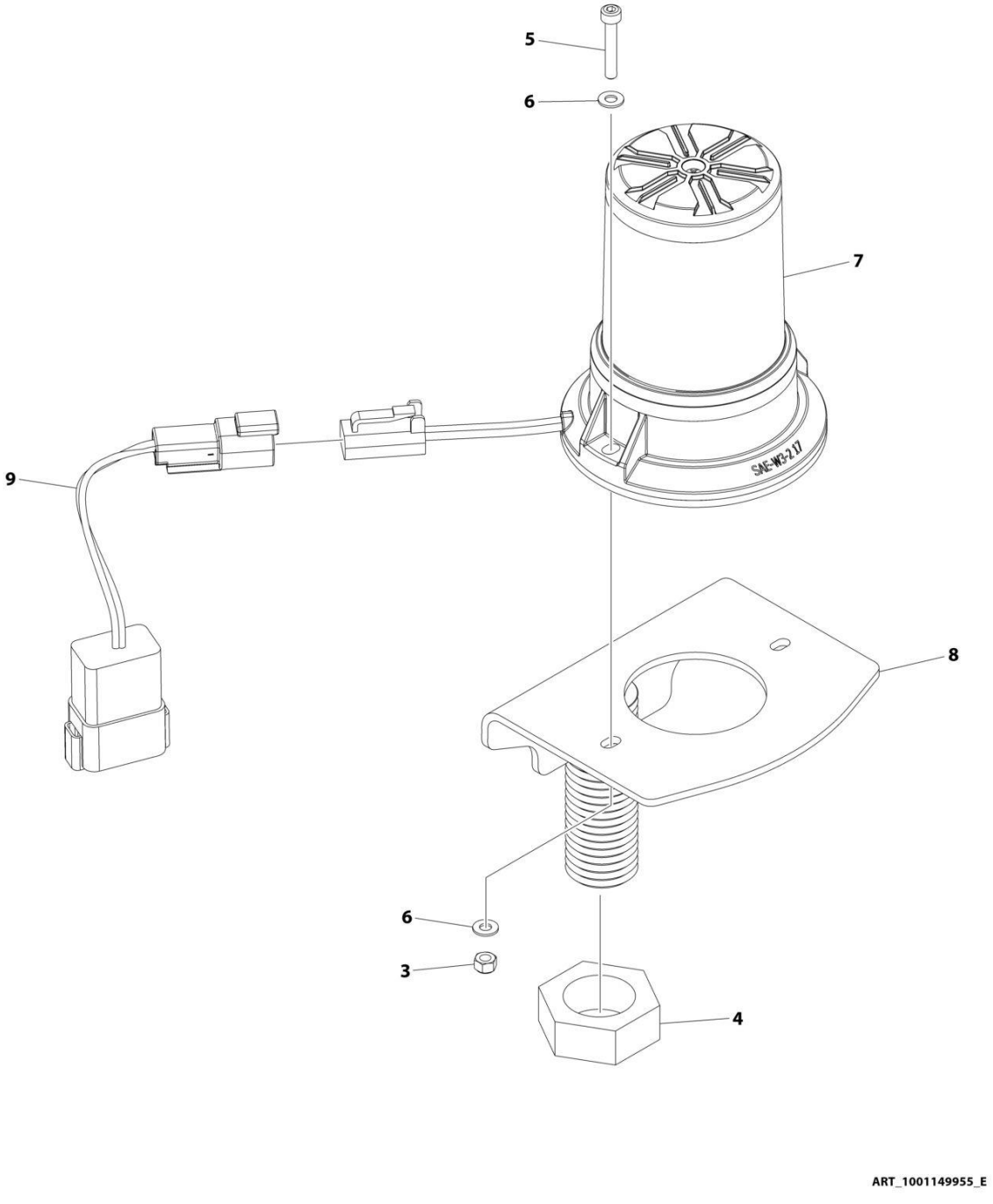

FIGURE 2-52. STROBE LIGHT INSTALLATION (AMBER)

ITEM	PART NUMBER	QTY	DESCRIPTION	REV
	1001149955	Ref	STROBE LIGHT INSTALLATION - AMBER	E
3	3290405	2	Nut, Lock M4	
4	3312602	1	Nut	
5	4031509	2	Capscrew M4 x 25	
6	4811400	4	Washer M4	
7	1001270594	1	Light, Strobe (Amber)	
7	4460891	1	Connector	
7	4460465	2	Pin	
8	1001275149	1	Bracket	
9	1001283776	1	Harness, Strobe Light (See Separate Breakdown in ELECTRICAL Section)	

FIGURE 2-53. STROBE LIGHT INSTALLATION (BLUE)

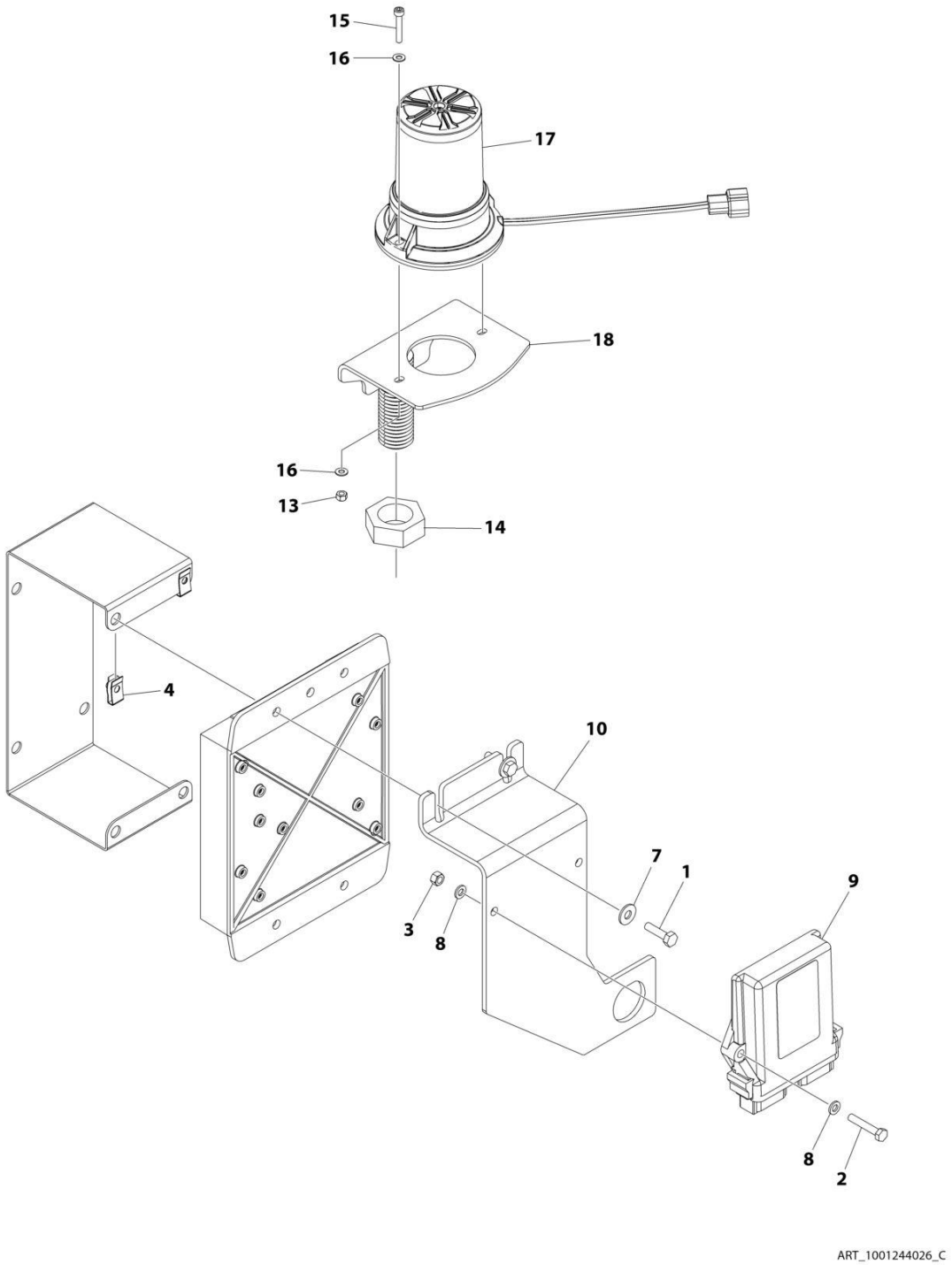

FIGURE 2-53. STROBE LIGHT INSTALLATION (BLUE)

ITEM	PART NUMBER	QTY	DESCRIPTION	REV
	1001244026	Ref	STROBE LIGHT INSTALLATION (BLUE)	C
1	0641408	2	Bolt 1/4 x 1	
2	0700615	2	Bolt M6 x 35	
3	3290607	2	Nut M6 x 1	
4	3300454	2	Nut 1/4	
5	4240032	AR	Tie-Strap (Not Shown)	
6	4460488	AR	Mounting Base (Not Shown)	
7	4751400	2	Washer 1/4	
8	4811700	4	Washer M6	
9	1001142683	1	Module, Control Beacon	
10	1001142719	1	Bracket	
12	1001142736	1	Harness, Beacon Control (Not Shown - See Separate Breakdown in ELECTRICAL Section)	
13	3290405	2	Nut, Lock M4	
14	3312602	1	Nut	
15	4031509	2	Capscrew M4 x 25	
16	4811400	4	Washer M4	
17	1001272681	1	Light, Beacon	
17	4460897	1	Connector	
17	4460464	2	Pin	
18	1001278850	1	Bracket (Centered Stud)	
18	1001275149	1	Bracket (Offset Stud)	

FIGURE 2-54. STROBE LIGHT INSTALLATION (RED)

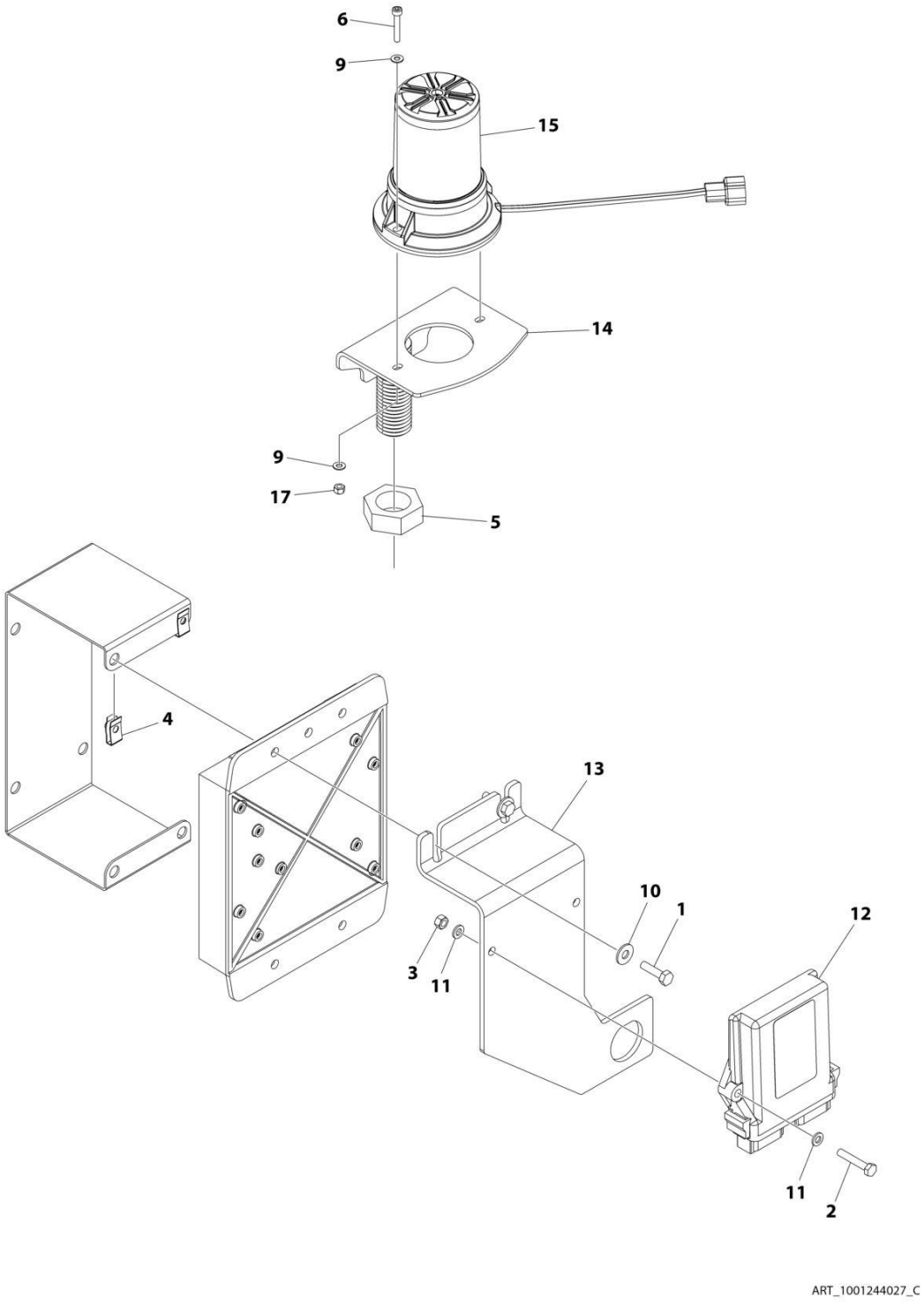

FIGURE 2-54. STROBE LIGHT INSTALLATION (RED)

ITEM	PART NUMBER	QTY	DESCRIPTION	REV
	1001244027	Ref	STROBE LIGHT INSTALLATION (RED)	C
1	0641408	2	Bolt 1/4 x 1	
2	0700615	2	Bolt M6 x 35	
3	3290607	2	Nut M6 x 1	
4	3300454	2	Nut	
5	3312602	1	Nut	
6	4031509	2	Capscrew M4 x 25	
7	4240032	AR	Tie-Strap (Not Shown)	
8	4460488	AR	Mounting Base (Not Shown)	
9	4811400	4	Washer M4	
10	4751400	2	Washer 1/4	
11	4811700	4	Washer M6	
12	1001142683	1	Module, Control Beacon	
13	1001142719	1	Bracket	
14	1001278850	1	Bracket (Centered Stud)	
14	1001275149	1	Bracket (Offset Stud)	
15	1001272682	1	Light, Strobe	
15	4460897	1	Connector	
15	4460464	2	Pin	
16	1001142736	1	Harness, Beacon Control (Not Shown - See Separate Breakdown in ELECTRICAL Section)	
17	3290405	2	Nut, Lock M4	

FIGURE 2-55. ENGINE TRAY JACK INSTALLATION - DEUTZ TD2011 ENGINES

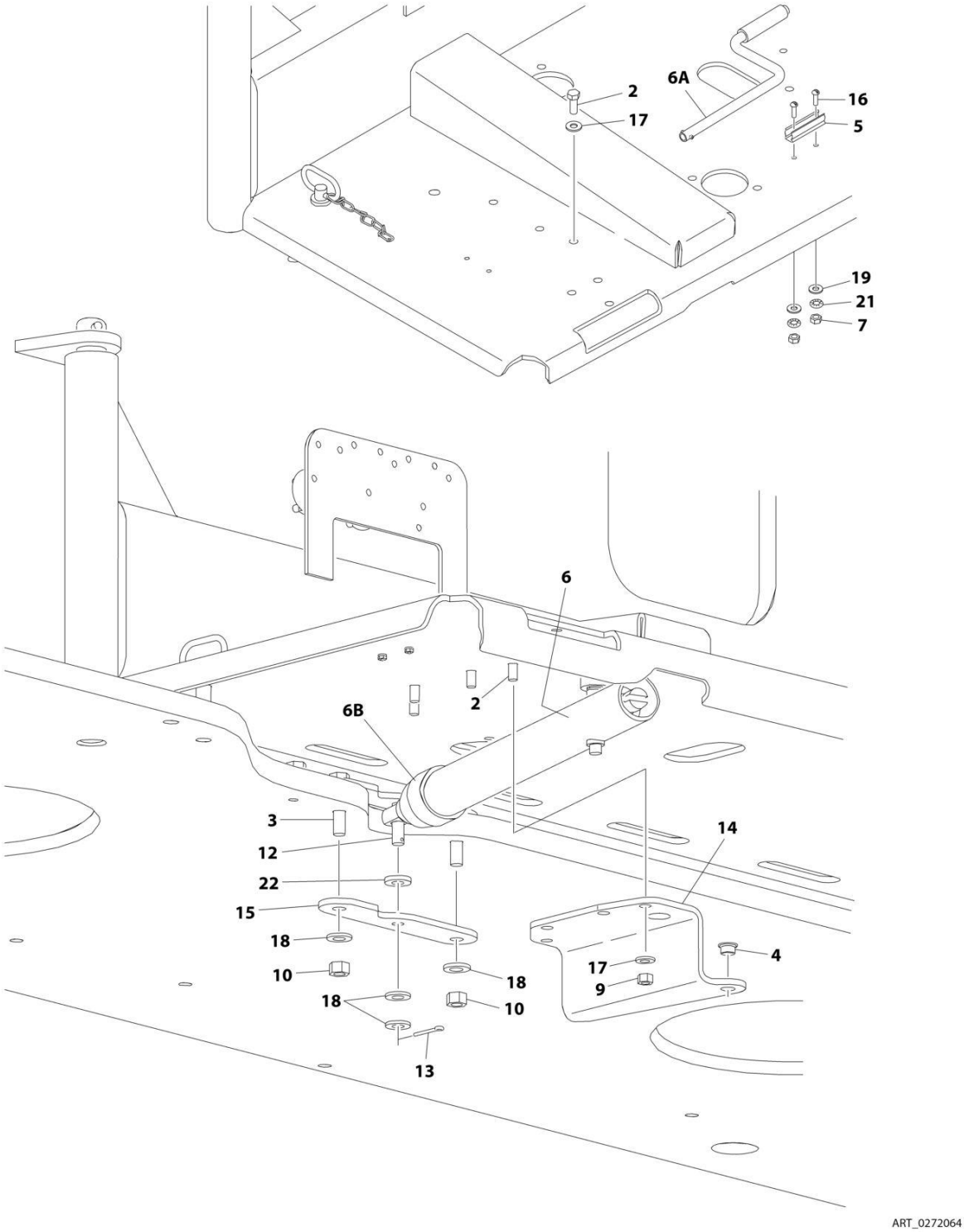

FIGURE 2-55. ENGINE TRAY JACK INSTALLATION - DEUTZ TD2011 ENGINES

ITEM	PART NUMBER	QTY	DESCRIPTION	REV
	0272064	Ref	ENGINE TRAY JACK INSTALLATION	C
2	0641608	4	Bolt 3/8 x 1	
3	0641818	2	Bolt 1/2 x 2-1/4	
4	0962051	2	Bearing, Flanged	
5	1380147	1	Clip, Spring	
6	2840016	1	Jack and Handle Assembly	
6A		Ref	Handle Options:	
6A	7016374	1	Burr Manufacturing Brand	
6A	7024598	1	Hammerblow Corp Brand	
6B	7016322	1	Wiper (Burr Manufacturing Brand Only)	
7	3310601	2	Nut #6	
9	3311605	4	Nut 3/8	
10	3311805	2	Nut 1/2	
12	3430816	1	Pin, Clevis	
13	3450404	1	Pin, Cotter 1/8 x 1	
14	3537445	1	Bracket	
15	3573454	2	Plate	
16	3910608	2	Screw #6 x 1/2	
17	4711600	8	Washer 3/8	
18	4711800	4	Washer 1/2	
19	4750600	2	Washer #6	
21	4770600	2	Starwasher #6	
22	4891800	1	Washer 1/2	

FIGURE 2-56. ENGINE TRAY JACK INSTALLATION - DEUTZ TD2.9L4/TCD2.9L4 ENGINES AND DEUTZ TCD2.9L4 (STAGE V) ENGINES

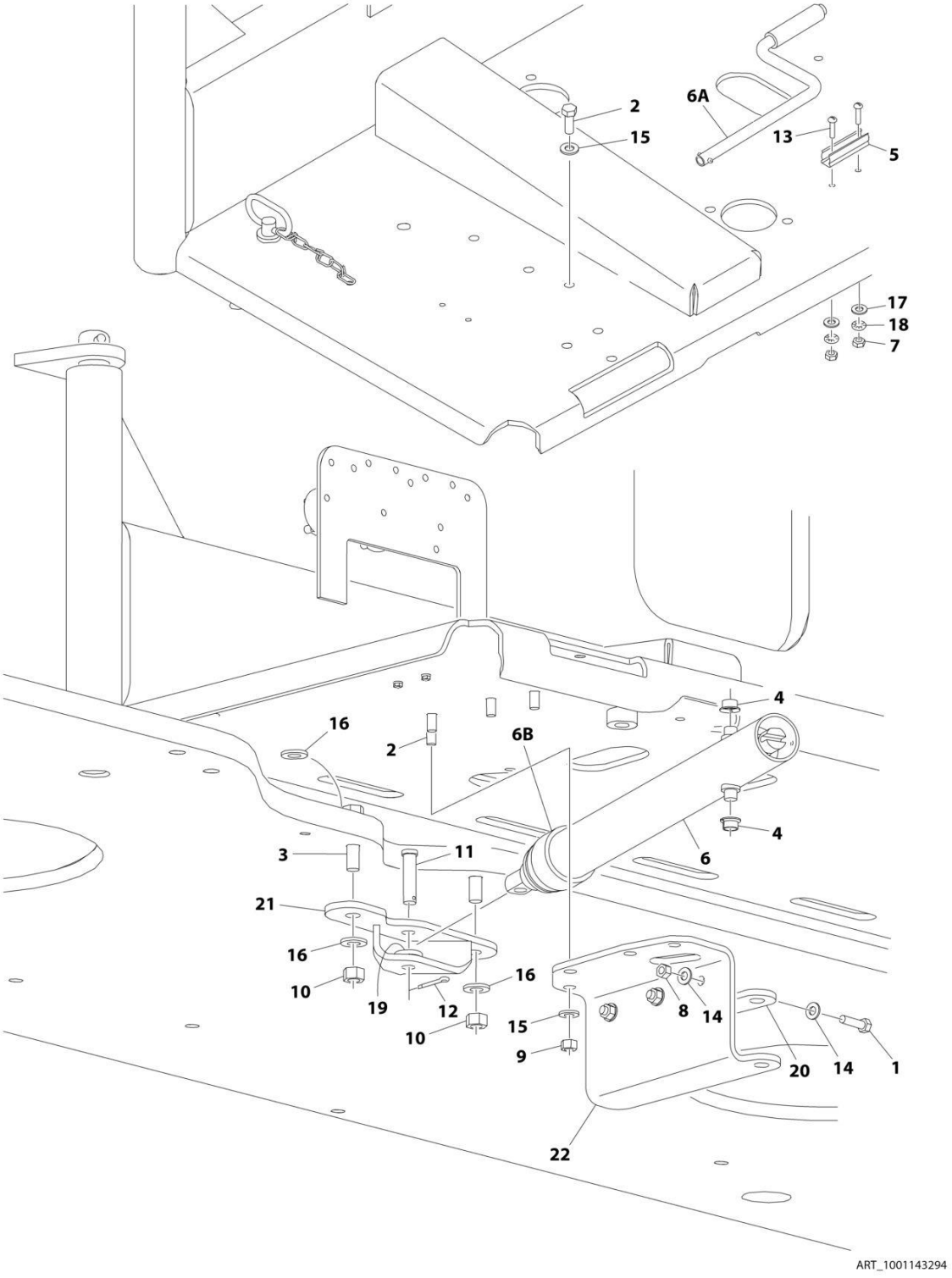

FIGURE 2-56. ENGINE TRAY JACK INSTALLATION - DEUTZ TD2.9L4/TCD2.9L4 ENGINES AND DEUTZ TCD2.9L4 (STAGE V) ENGINES

ITEM	PART NUMBER	QTY	DESCRIPTION	REV
	1001143294	Ref	ENGINE TRAY JACK INSTALLATION	A
1	0641509	3	Bolt 5/16 x 1-1/8	
2	0641608	4	Bolt 3/8 x 1	
3	0641816	2	Bolt 1/2 x 2	
4	0962051	2	Bearing, Flanged	
5	1380147	1	Clip, Spring	
6	2840016	1	Jack and Handle Assembly	
6A		Ref	Handle Options:	
6A	7016374	1	Burr Manufacturing Brand (Identified by 4in handle offset)	
6A	7024598	1	Hammerblow Corp Brand (Identified by 4-1/2in handle offset)	
6B	7016322	1	Wiper (Burr Manufacturing Brand Only)	
7	3310601	2	Nut #6	
8	3311505	3	Nut 5/16	
9	3311605	4	Nut 3/8	
10	3311805	2	Nut 1/2	
11	3430816	1	Pin, Clevis	
12	3450404	1	Pin, Cotter 1/8 x 1	
13	3910608	2	Screw #6 x 1/2	
14	4711500	6	Washer 5/16	
15	4711600	8	Washer 3/8	
16	4711800	4	Washer 1/2	
17	4750600	2	Washer #6	
18	4770600	2	Starwasher #6	
19	4891800	1	Washer 1/2	
20	1001131482	1	Plate, Jack Bracket	
21	1001135663	1	Support, Engine Tray Jack	
22	1001143298	1	Plate, Jack Bracket	

FIGURE 2-57. HOOD INSTALLATIONS - DEUTZ TD2011 ENGINES (ABS)

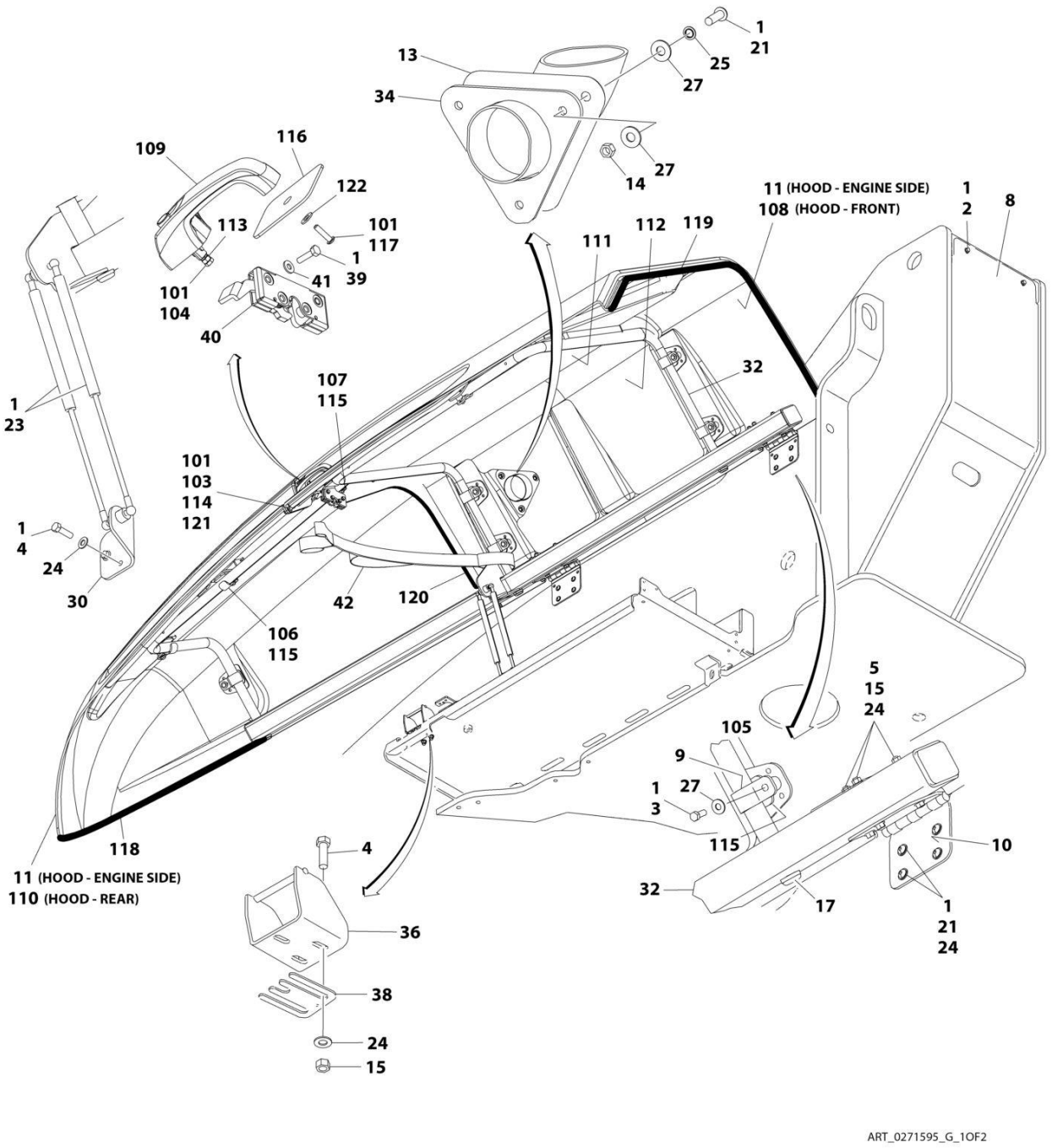

ART_0271595_G_1OF2

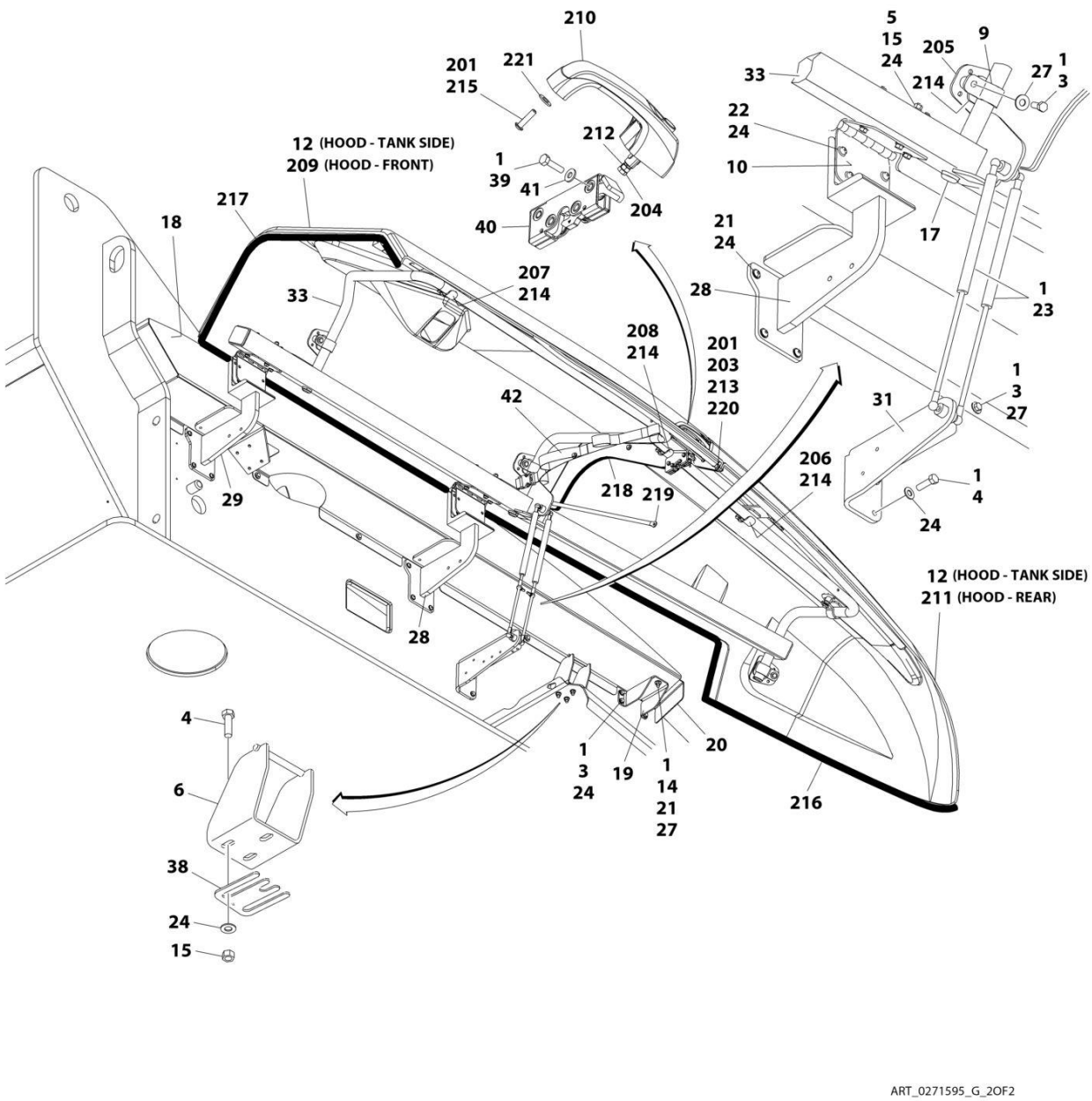
210
201
215
221
212
1
39
41
40
204
12 (HOOD - TANK SIDE)
209 (HOOD - FRONT)
217
18
33
207
214
208
214
201
203
213
220
42
218
219
29
28
5
15
24
205
9
27
1
3
214
33
22
24
10
17
21
24
28
1
23
1
3
27
31
206
214
1
4
24
12 (HOOD - TANK SIDE)
211 (HOOD - REAR)
4
6
38
24
15
1
3
24
19
1
14
21
27
20
216
ART_0271595_G_2OF2

FIGURE 2-57. HOOD INSTALLATIONS - DEUTZ TD2011 ENGINES (ABS)

ITEM	PART NUMBER	QTY	DESCRIPTION	REV
	0271595	Ref	HOOD INSTALLATIONS - DEUTZ TD2011 ENGINES (ABS)	G
1	0100011	AR	Compound, Locking	
2	0791604	2	Screw 3/8 x 1/2	
3	0641608	24	Bolt 3/8 x 1	
4	0641610	12	Bolt 3/8 x 1-1/4	
5	0641630	12	Bolt 3/8 x 3-3/4	
6	0903156	1	Bracket	
8	1671038	1	Cover, Turntable	
9	2080051	16	Clamp	
10	2600280	4	Hinge	
11	1671192	1	Hood, Engine Side (See Items 101-123 for Breakdown)	
		Ref	Note: Replacement decals must be ordered separately - See DECAL SECTION.	
12	1671194	1	Hood, Tank Side (See Items 201-225 for Breakdown)	
		Ref	Note: Replacement decals must be ordered separately - See DECAL SECTION.	
13	2820141	1	Shield, Heat	
14	3311601	5	Nut 3/8	
15	3311605	18	Nut 3/8	
17	3520186	6	Plug	
18	3573231	1	Trough, Powertrack	
19	3573232	1	Mount, Trough	
20	3573233	1	Plate, Seal Mounting	
21	3900232	21	Screw 3/8 x 1-1/4	
22	3900283	16	Screw 3/8 x 3/4	
23	4160194	4	Spring, Gas	
24	4711600	70	Washer 3/8	
25	4740500	3	Washer, Nylon	
27	4751600	38	Washer 3/8	
28	4340923	1	Support, Rear Hood	
29	4340924	1	Support, Front Hood	
30	4341001	1	Mount, Gas Spring	
31	4340999	1	Mount, Gas Spring	
32	4340996	1	Support, Engine Side Hood	
33	4340995	1	Support, Tank Side Hood	
34	4846503	1	Stack, Exhaust	
36	0903154	1	Bracket, Latch	
37	3520034	2	Plug (Not Shown - Located in Boom Rest)	
38	4071048	2	Shim	
39	0641408	8	Bolt 1/4 x 1	
40	2940173	2	Latch, Rotary	
41	4711400	8	Washer 1/4	
42	1001160505	2	Strap	
	1671192	Ref	ENGINE SIDE HOOD ASSEMBLIES (ABS)	B
101	0100011	AR	Compound, Locking	
102	0100081	AR	Adhesive (Not Shown)	
103	0641506	10	Bolt 5/16 x 3/4	
104	0760608	1	Screw M6 x 16	
105	0902746	7	Bracket	
106	0902761	1	Bracket	

ITEM	PART NUMBER	QTY	DESCRIPTION	REV
107	0903161	1	Bracket	
108	1671191	1	Hood - Front	
109	2560187	1	Handle, Push Button	
110	2680496	1	Hood - Rear	
111	2820145	1	Insulation	
112	2820146	1	Insulation	
113	3290601	1	Nut M6 x 1	
114	3311501	10	Nut 5/16	
115	3340877	9	Pad	
116	3575782	1	Plate, Handle Backing	
117	3900363	2	Screw M6 x 1 x 25	
118	3960464	12 ft /3.7m	Seal, Hood	
119	4060804	61 in /1.6m	Flex-Trim	
120	4060806	49 in /1.3m	Flex-Trim	
121	4751500	20	Washer 5/16	
122	4811900	2	Washer M8	
	1671194	Ref	TANK SIDE HOOD ASSEMBLY (ABS)	A
201	0100011	AR	Compound, Locking	
202	0100081	AR	Adhesive (Not Shown)	
203	0641506	9	Bolt 5/16 x 3/4	
204	0760608	1	Screw M6 x 16	
205	0902746	4	Bracket	
206	0902762	1	Bracket	
207	0902763	1	Bracket	
208	0903162	1	Bracket	
209	1671193	1	Hood - Front	
210	2560187	1	Handle, Push Button	
211	2680498	1	Hood - Rear	
212	3290601	1	Nut M6	
213	3311501	9	Nut 5/16	
214	3340877	7	Pad	
215	3900363	2	Screw M6 x 1 x 25	
216	3960464	149 in /3.8m	Seal, Hood	
217	4060804	53 in /1.4m	Flex-Trim	
218	4060806	40 in /1.2m	Flex-Trim	
219	4240150	1	Strap, Ground	
220	4751500	18	Washer 5/16	
221	4811900	2	Washer M8	

FIGURE 2-58. HOOD INSTALLATION - DEUTZ TCD2.9L4 ENGINES (ABS)

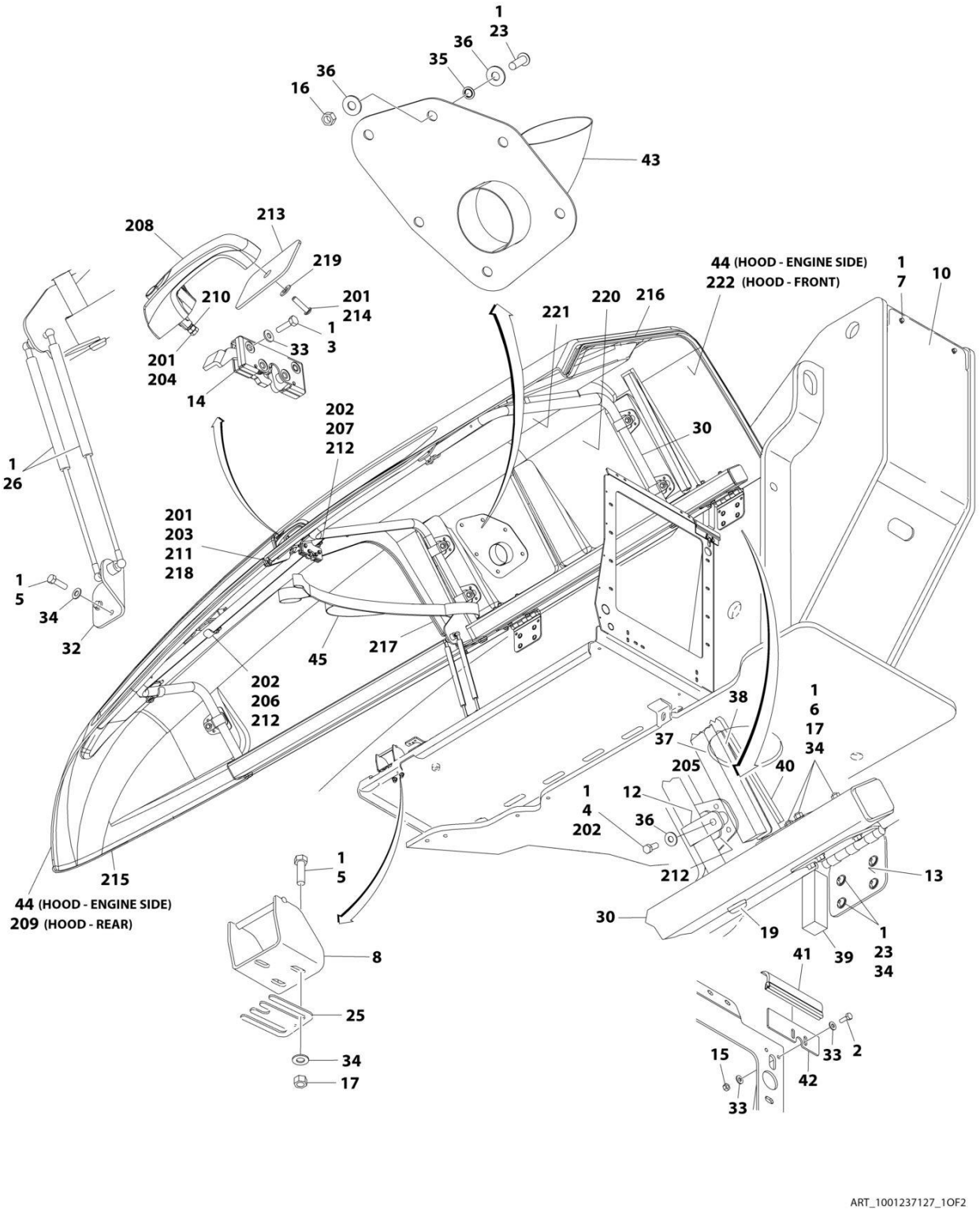

ART_1001237127_1OF2

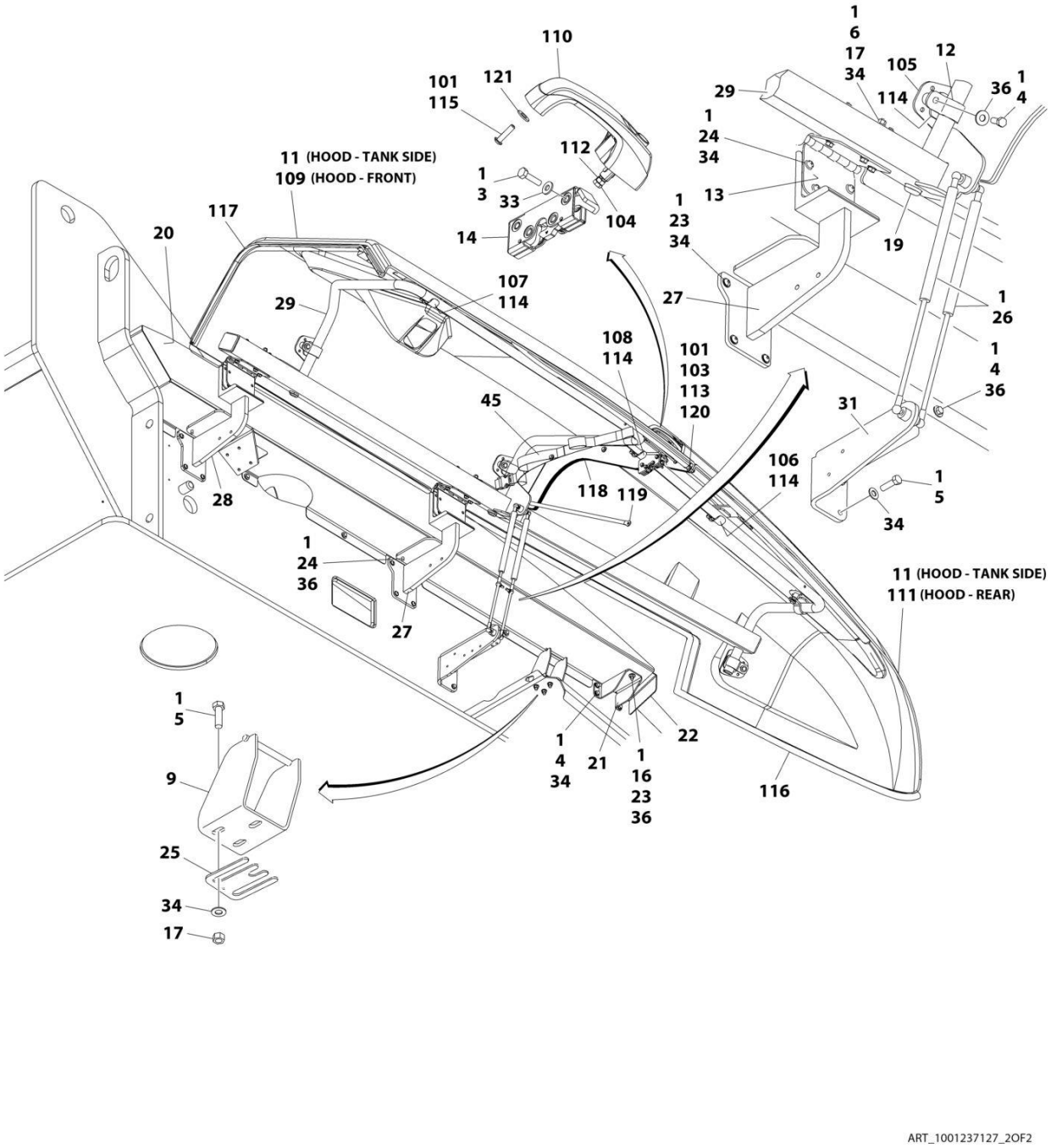

ART_1001237127_2OF2

FIGURE 2-58. HOOD INSTALLATION - DEUTZ TCD2.9L4 ENGINES (ABS)

ITEM	PART NUMBER	QTY	DESCRIPTION	REV
	1001237127	Ref	HOOD INSTALLATION - DEUTZ TCD2.9L4 ENGINES (ABS)	B
1	0100011	AR	Compound, Locking	
2	0641406	2	Bolt 1/4 x 3/4	
3	0641408	8	Bolt 1/4 x 1	
4	0641608	24	Bolt 3/8 x 1	
5	0641610	12	Bolt 3/8 x 1-1/4	
6	0641630	12	Bolt 3/8 x 3-3/4	
7	0791604	2	Screw 3/8 x 1/2	
8	0903154	1	Bracket, Latch	
9	0903156	1	Bracket	
10	1671038	1	Cover, Turntable	
11	1671194	1	Hood, Tank Side (See Items 101-121 for Breakdown)	
		Ref	Note: Replacement decals must be ordered separately - See DECAL SECTION.	
12	2080051	16	Clamp	
13	2600280	4	Hinge	
14	2940173	2	Latch, Rotary	
15	3311405	2	Nut 1/4	
16	3311601	8	Nut 3/8	
17	3311605	18	Nut 3/8	
18	3520034	2	Plug (Not Shown - Located in Boom Rest)	
19	3520186	6	Plug	
20	3573231	1	Trough, Powertrack	
21	3573232	1	Mount, Trough	
22	3573233	1	Plate, Seal Mounting	
23	3900232	24	Screw 3/8 x 1-1/4	
24	3900283	16	Screw 3/8 x 3/4	
25	4071048	2	Shim	
26	4160194	4	Spring, Gas	
27	4340923	1	Support, Rear Hood	
28	4340924	1	Support, Front Hood	
29	4340995	1	Support, Tank Side Hood	
30	4340996	1	Support, Engine Side Hood	
31	4340999	1	Mount, Gas Spring	
32	4341001	1	Mount, Gas Spring	
33	4711400	12	Washer 1/4	
34	4711600	70	Washer 3/8	
35	4740500	6	Washer, Nylon	
36	4751600	44	Washer 3/8	
37	1001140485	1	Seal	
38	1001142144	1	Bracket	
39	1001146132	1	Seal	
40	1001146142	1	Seal	
41	1001146178	1	Seal	
42	1001146183	1	Plate	
43	1001236408	1	Stack, Exhaust	
44	1001237125	1	Hood, Engine Side (See Items 201-222 for Breakdown)	
		Ref	Note: Replacement decals must be ordered separately - See DECAL SECTION.	
45	1001160505	2	Strap	

ITEM	PART NUMBER	QTY	DESCRIPTION	REV
	1671194	Ref	TANK SIDE HOOD ASSEMBLY (ABS)	A
101	0100011	AR	Compound, Locking	
102	0100081	AR	Adhesive (Not Shown)	
103	0641506	9	Bolt 5/16 x 3/4	
104	0760608	1	Screw M6 x 16	
105	0902746	4	Bracket	
106	0902762	1	Bracket	
107	0902763	1	Bracket	
108	0903162	1	Bracket	
109	1671193	1	Hood - Front	
110	2560187	1	Handle, Push Button	
111	2680498	1	Hood - Rear	
112	3290601	1	Nut M6	
113	3311501	9	Nut 5/16	
114	3340877	7	Pad	
115	3900363	2	Screw M6 x 25	
116	3960464	12.4 ft /3.8m	Seal, Hood	
117	4060804	4.4 ft /1.4m	Flex-Trim	
118	4060806	3.3 ft /1.2m	Flex-Trim	
119	4240150	1	Strap, Ground	
120	4751500	18	Washer 5/16	
121	4811900	2	Washer M8	
	1001237125	Ref	ENGINE SIDE HOOD ASSEMBLY (ABS)	A
201	0100011	AR	Compound, Locking	
202	0100081	AR	Adhesive	
203	0641510	10	Bolt 5/16 x 1-1/4	
204	0760608	1	Screw M6 x 16	
205	0902746	7	Bracket	
206	0902761	1	Bracket	
207	0903161	1	Bracket	
208	2560187	1	Handle, Push Button	
209	2680496	1	Hood - Rear	
210	3290601	1	Nut M6	
211	3311501	10	Nut 5/16	
212	3340877	9	Pad	
213	3575782	1	Plate, Handle Backing	
214	3900363	2	Screw M6 x 25	
215	3960464	12 ft /3.7m	Seal, Hood	
216	4060804	5.1 ft /1.6m	Flex-Trim	
217	4060806	4.1 ft /1.3m	Flex-Trim	
218	4751500	20	Washer 5/16	
219	4811900	2	Washer M8	
220	1001117140	AR	Tape, Aluminized	
221	1001152566	AR	Insulation	
222	1001237124	1	Hood - Engine Side Front	

SECTION 2 - TURNTABLE

ITEM	PART NUMBER	QTY	DESCRIPTION	REV
		Ref	Note: When installing a replacement hood, heat shields (item 223) must be installed on the replacement hood before being place in service. Heat shield must be purchased separately.	

FIGURE 2-59. HOOD INSTALLATION - DEUTZ TD2011/TD2.9L4/TCD2.9L ENGINES (STEEL)

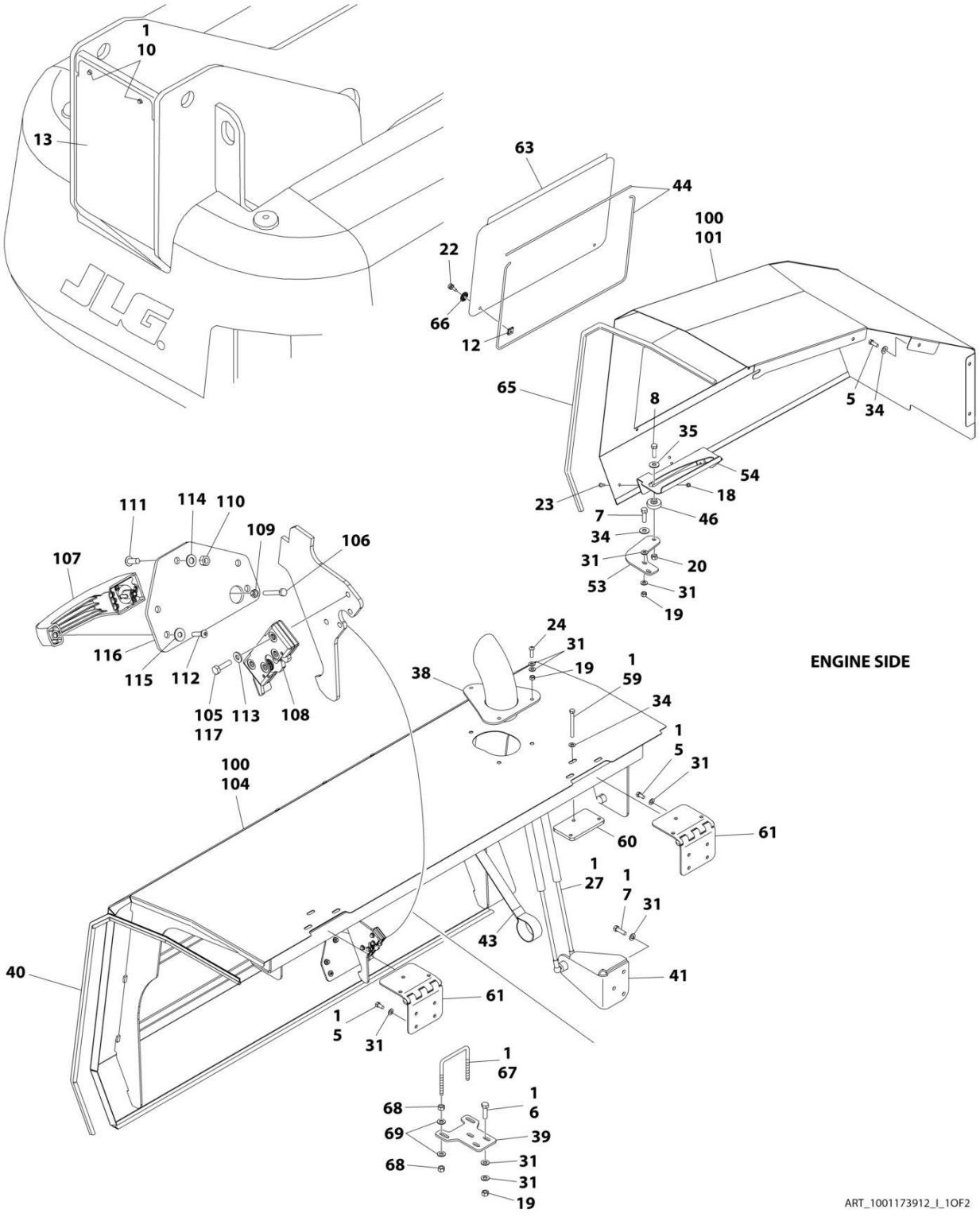

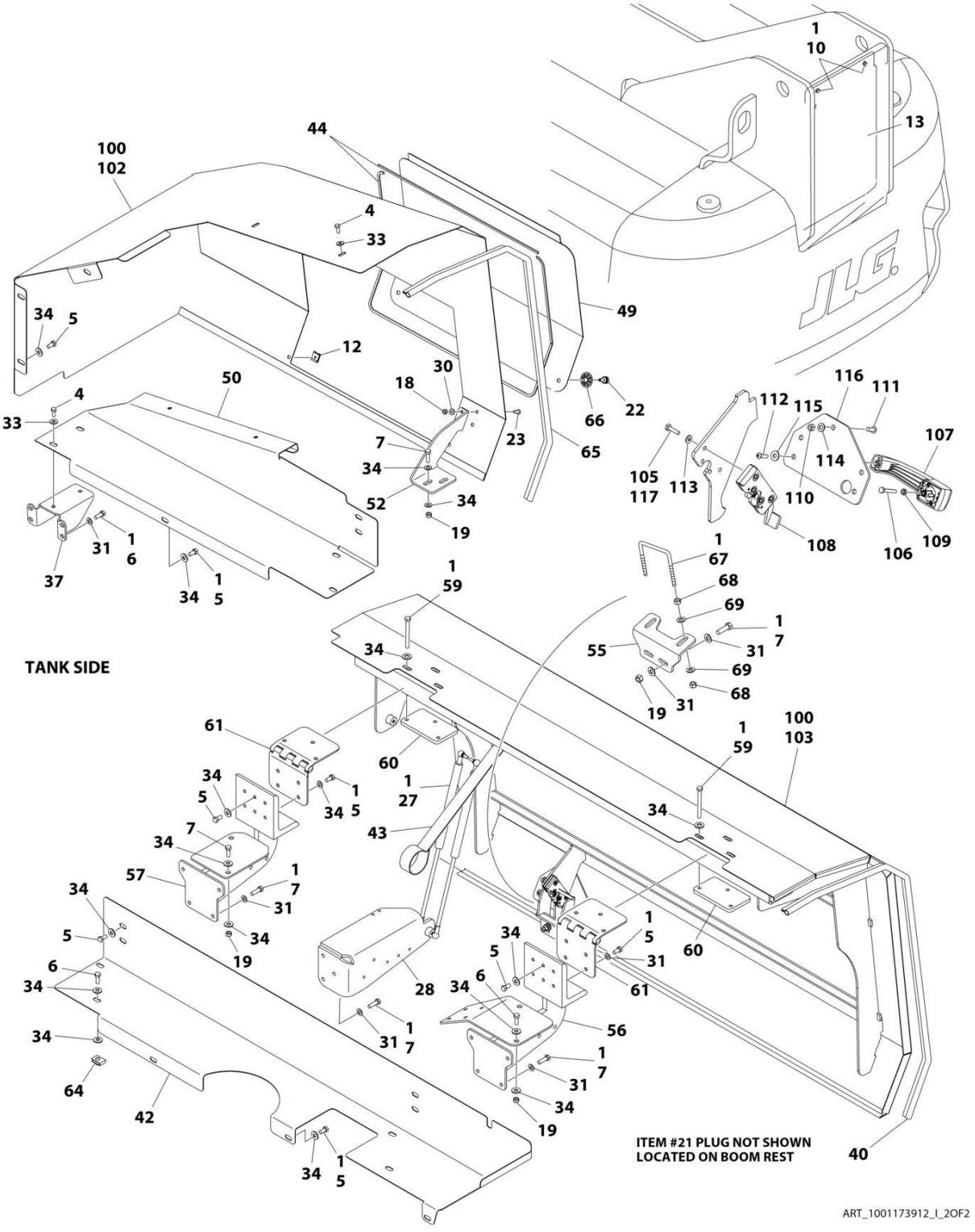
TANK SIDE
ITEM #21 PLUG NOT SHOWN
LOCATED ON BOOM REST
ART_1001173912_I_2OF2

FIGURE 2-59. HOOD INSTALLATION - DEUTZ TD2011/TD2.9L4 ENGINES (STEEL)

ITEM	PART NUMBER	QTY	DESCRIPTION	REV
	1001173912	Ref	HOOD INSTALLATION - DEUTZ TD2011/TD2.9L4 ENGINES (STEEL)	I
		Ref	Note: Replacement Decals Must be Ordered Separately - See DECAL SECTION.	
1	0100011	AR	Compound, Locking	
4	0641506	AR	Bolt 5/16 x 3/4	
5	0641606	32	Bolt 3/8 x 3/4	
6	0641608	8	Bolt 3/8 x 1	
7	0641610	AR	Bolt 3/8 x 1-1/4	
8	0641813	1	Bolt 1/2 x 1-5/8	
10	0791604	2	Screw 3/8 x 1/2	
12	1380169	4	Clip	
13	1671038	1	Cover	
18	3311505	5	Nut 5/16	
19	3311605	AR	Nut 3/8	
20	3311805	1	Nut 1/2	
21	3520034	2	Plug, Hole	
22	3900174	4	Screw, Thumb	
23	3900210	5	Screw 5/16 x 3/4	
24	3900232	3	Screw 3/8 x 1-1/4	
27	4160194	4	Spring, Gas	
28	4340999	1	Mount, Gas Spring	
30	4711500	2	Washer 5/16	
31	4711600	54	Washer 3/8	
33	4751500	4	Washer 5/16	
34	4751600	AR	Washer 3/8	
35	4751800	1	Washer 1/2	
37	3573232	1	Support, Power Track Trough	
38	1001110027	1	Stack, Exhaust	
39	1001250296	1	Bracket, Striker	
40	1001110433	AR	Seal	
41	1001110486	1	Mount, Gas Spring	
42	1001175859	1	Plate, Power Track Trough	
43	1001112691	2	Strap, Hand Pull	
44	1001113047	14.5 ft/ 4.4m	Seal	
46	1001131462	1	Pad, Hood Slide	
49	1001173166	1	Cover, Access (Tank Side)	
50	1001173170	1	Plate, Power Track Trough	
52	1001173185	1	Plate, Mounting	
53	1001173186	1	Bracket, Engine Tray	
54	1001173187	1	Bracket, Engine Tray	
55	1001250297	1	Bracket, Hood Latch	
56	1001173647	1	Support, Front Hood	
57	1001173651	1	Support, Front Hood	
59	0641630	12	Bolt 3/8 x 3-3/4	
60	1001175880	4	Plate	
61	1001175879	4	Hinge, Offset Hood	
63	1001180051	1	Cover, Access (Engine Side)	
64	88662523	4	Nut, Tinnerman	

ITEM	PART NUMBER	QTY	DESCRIPTION	REV
65	3960447	10 ft/ 3.1m	Seal, Self-Gripping	
66	3760308	4	Retainer	
67	1001243414	2	U - Bolt	
68	3311601	8	Nut 3/8	
69	4891600	8	Washer 3/8	
100	1001175250	1	Kit, Hood	F
101	1001173163	1	Hood, Engine Side - Rear	
102	1001173164	1	Hood, Tank Side - Rear	
103	1001173183	1	Hood, Tank Side - Front	
104	1001174331	1	Hood, Engine Side - Front	
105	0641408	8	Bolt 1/4 x 1	
106	0700616	2	Bolt M6 x 40	
107	2560187	2	Handle, Push Button	
108	2940173	2	Latch, Rotary	
109	3290601	2	Nut M6	
110	3311505	6	Nut 5/16	
111	3900210	6	Screw 5/16 x 3/4	
112	3900363	4	Screw M6 x 25	
113	4711400	8	Washer 1/4	
114	4711500	6	Washer 5/16	
115	4751400	4	Washer 1/4	
116	1001116290	2	Plate, Latch Mounting	
117	0100011	AR	Compound, Locking	

FIGURE 2-60. HOOD INSTALLATION - DEUTZ TCD2.9L (CHINA IV) ENGINES (STEEL)

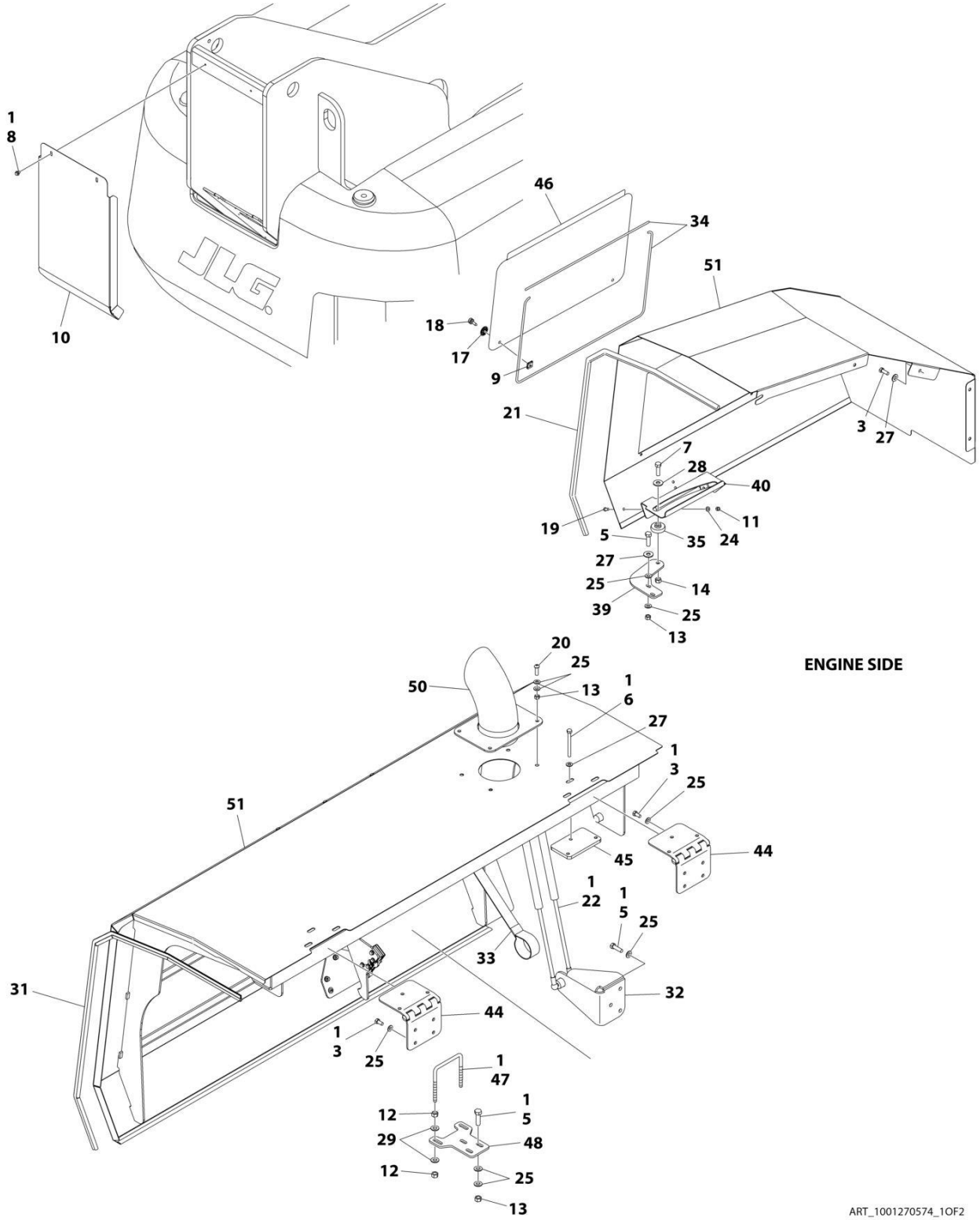

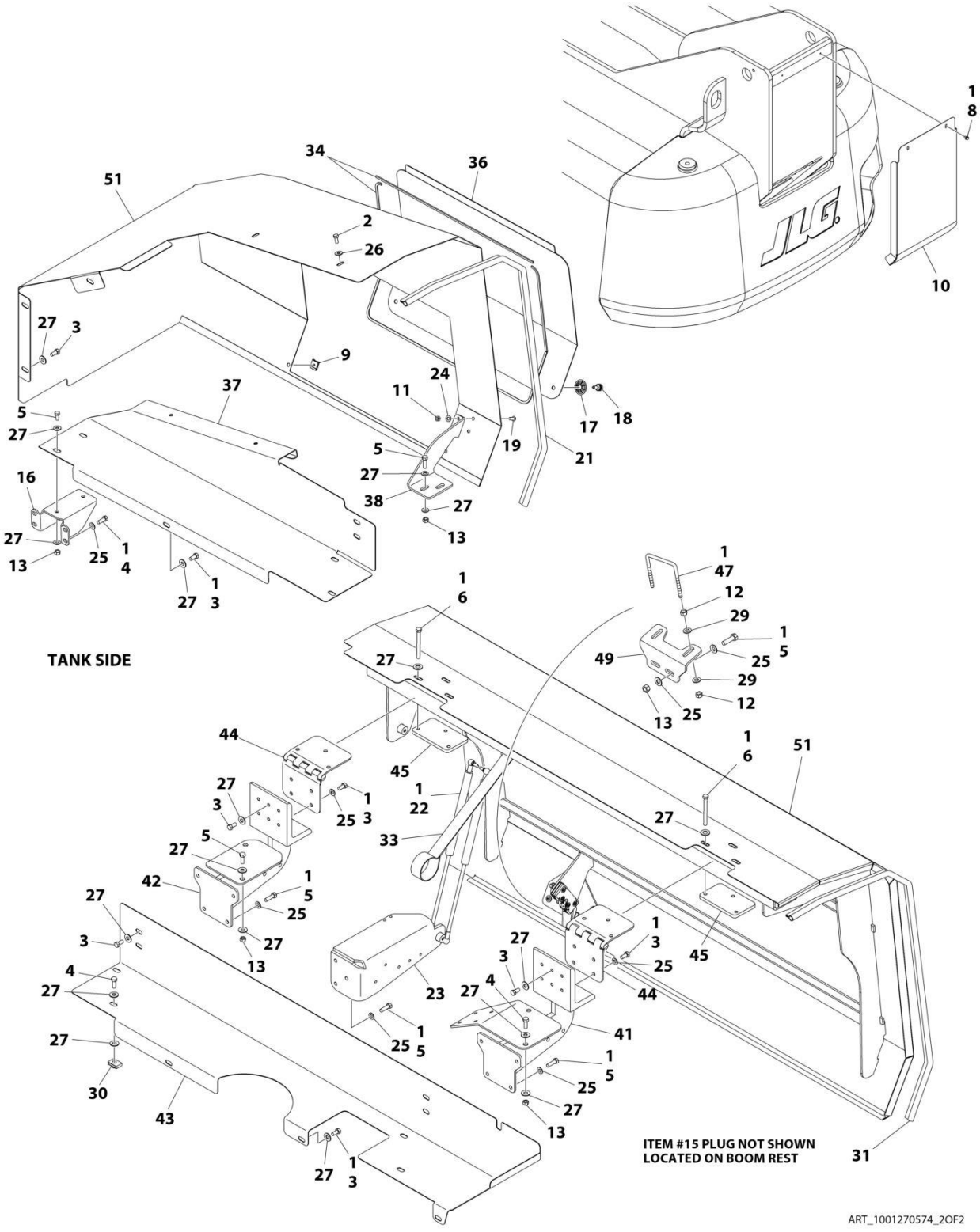
TANK SIDE
ITEM #15 PLUG NOT SHOWN
LOCATED ON BOOM REST
ART_1001270574_2OF2

FIGURE 2-60. HOOD INSTALLATION - DEUTZ TCD2.9L (CHINA IV) ENGINES (STEEL)

ITEM	PART NUMBER	QTY	DESCRIPTION	REV
	1001270574	1	HOOD INSTALLATION	A
		Ref	Note: Replacement Decals Must be Ordered Separately - See DECAL Section.	
1	0100011	AR	Compound, Locking	
2	0641506	2	Bolt 5/16 x 3/4	
3	0641606	32	Bolt 3/8 x 3/4	
4	0641608	8	Bolt 3/8 x 1	
5	0641610	25	Bolt 3/8 x 1-1/4	
6	0641630	12	Bolt 3/8 x 3-3/4	
7	0641813	1	Bolt 1/2 x 1-5/8	
8	0791604	2	Screw 3/8 x 1/2	
9	1380169	4	Clip	
10	1671038	1	Cover	
11	3311505	5	Nut 5/16	
12	3311601	8	Nut 3/8	
13	3311605	15	Nut 3/8	
14	3311805	1	Nut 1/2	
15	3520034	2	Plug, Hole	
16	3573232	1	Support, Power Track Trough	
17	3760308	4	Retainer	
18	3900174	4	Screw, Thumb	
19	3900210	5	Screw 5/16 x 3/4	
20	3900232	3	Screw 3/8 x 1-1/4	
21	3960447	10 ft/ 3.1m	Seal, Self-Gripping	
22	4160194	4	Spring, Gas	
23	4340999	1	Mount, Gas Spring	
24	4711500	5	Washer 5/16	
25	4711600	42	Washer 3/8	
26	4751500	2	Washer 5/16	
27	4751600	42	Washer 3/8	
28	4751800	1	Washer 1/2	
29	4891600	8	Washer 3/8	
30	88662523	4	Nut, Tinnerman	
31	1001110433	AR	Seal	
32	1001110486	1	Mount, Gas Spring	
33	1001112691	2	Strap, Hand Pull	
34	1001113047	14.5 ft/ 4.4m	Seal	
35	1001131462	1	Pad, Hood Slide	
36	1001173166	1	Cover, Access (Tank Side)	
37	1001173170	1	Plate, Power Track Trough	
38	1001173185	1	Plate, Mounting	
39	1001173186	1	Bracket, Engine Tray	
40	1001173187	1	Bracket, Engine Tray	
41	1001173647	1	Support, Front Hood	
42	1001173651	1	Support, Front Hood	
43	1001175859	1	Plate, Power Track Trough	
44	1001175879	4	Hinge, Offset Hood	
45	1001175880	4	Plate, Nut	

ITEM	PART NUMBER	QTY	DESCRIPTION	REV
46	1001180051	1	Cover, Access (Engine Side)	
47	1001243414	2	U - Bolt	
48	1001250296	1	Bracket, Engine	
49	1001250297	1	Bracket, Hood Latch	
50	1001270573	1	Pipe, Exhaust	
51	1001270575	1	Kit, Hood (See Separate Breakdown in this Section)	

FIGURE 2-61. HOOD INSTALLATION - DEUTZ TCD2.9L4 ENGINES (STEEL)

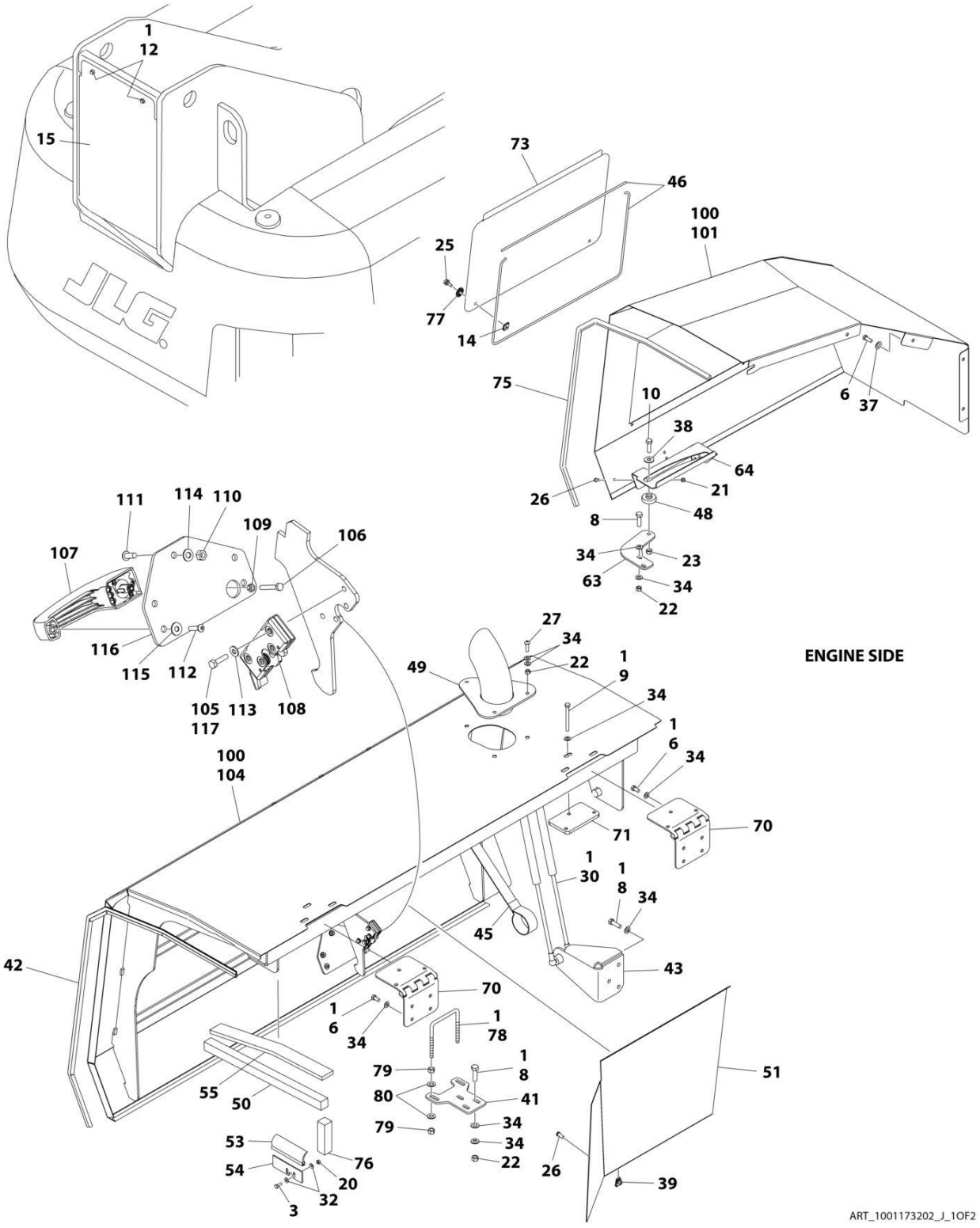

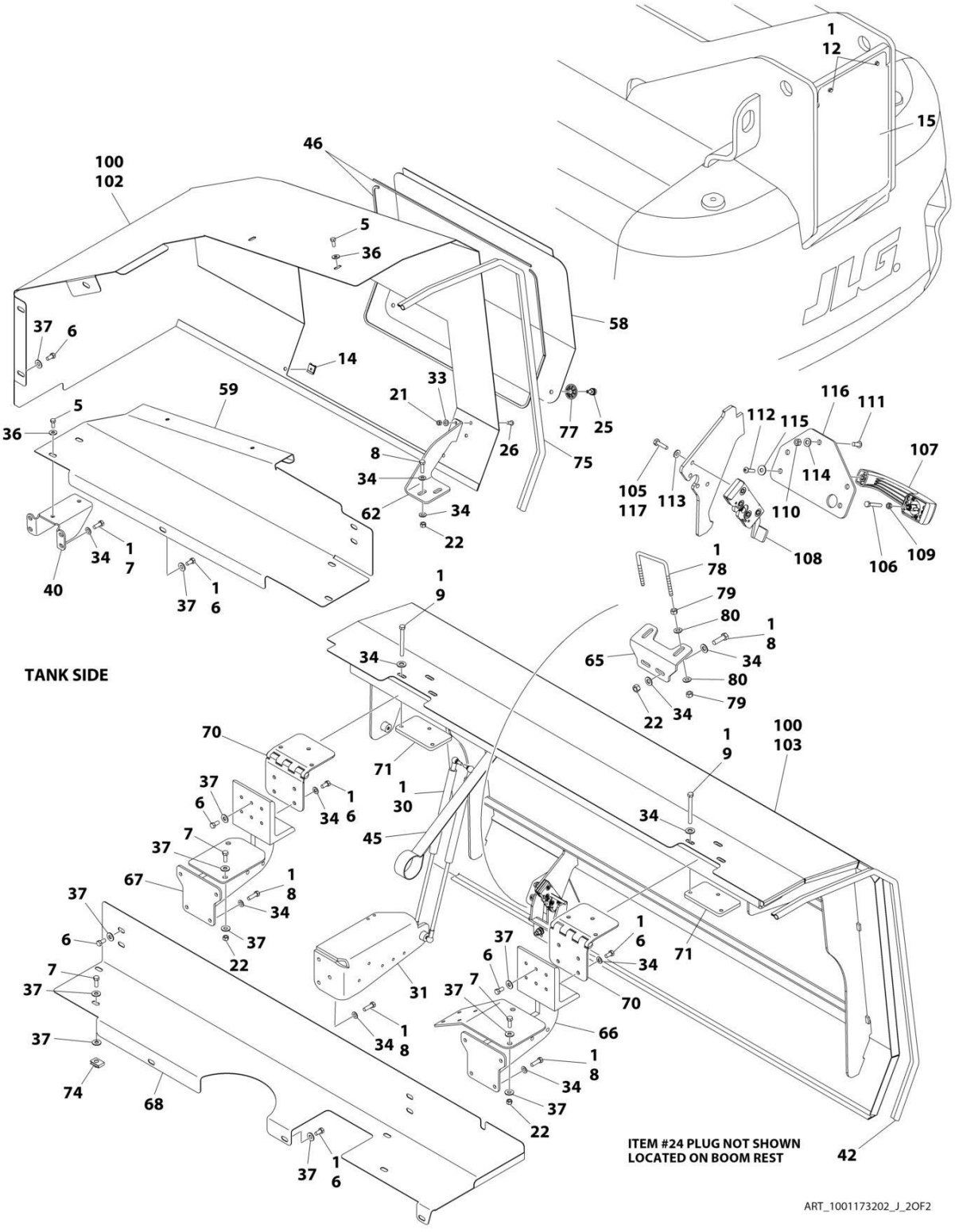
TANK SIDE
ITEM #24 PLUG NOT SHOWN
LOCATED ON BOOM REST
ART_1001173202_J_2OF2

FIGURE 2-61. HOOD INSTALLATION - DEUTZ TCD2.9L4 ENGINES (STEEL)

ITEM	PART NUMBER	QTY	DESCRIPTION	REV
	1001173202	Ref	HOOD INSTALLATION - DEUTZ TCD2.9L4 ENGINES (STEEL)	J
		Ref	Note: Replacement Decals Must be Ordered Separately - See DECAL SECTION.	
1	0100011	AR	Compound, Locking	
3	0641406	2	Bolt 1/4 x 3/4	
5	0641506	AR	Bolt 5/16 x 3/4	
6	0641606	32	Bolt 3/8 x 3/4	
7	0641608	8	Bolt 3/8 x 1	
8	0641610	AR	Bolt 3/8 x 1-1/4	
9	0641630	12	Bolt 3/8 x 3-3/4	
10	0641813	1	Bolt 1/2 x 1-5/8	
12	0791604	2	Screw 3/8 x 1/2	
14	1380169	4	Clip	
15	1671038	1	Cover	
20	3311405	2	Nut 1/4	
21	3311505	5	Nut 5/16	
22	3311605	AR	Nut 3/8	
23	3311805	1	Nut 1/2	
24	3520034	2	Plug, Hole	
25	3900174	4	Screw, Thumb	
26	3900210	10	Screw 5/16 x 3/4	
27	3900232	3	Screw 3/8 x 1-1/4	
31	4340999	1	Mount, Gas Spring	
32	4711400	4	Washer 1/4	
33	4711500	2	Washer 5/16	
34	4711600	72	Washer 3/8	
36	4751500	AR	Washer 5/16	
37	4751600	AR	Washer 3/8	
38	4751800	1	Washer 1/2	
39	8310658	5	Nut .312 x 1	
40	3573232	1	Support, Power Track Trough	
41	1001250296	1	Bracket, Striker	
42	1001110433	AR	Seal	
43	1001110486	1	Mount, Gas Spring	
45	1001112691	2	Strap, Hand Pull	
46	1001113047	14.5 ft/ 4.2m	Seal	
48	1001131462	1	Pad, Hood Slide	
49	1001139778	1	Stack, Exhaust	
50	1001140485	1	Seal	
51	1001145162	1	Panel, Heat Deflector	
53	1001146178	1	Seal	
54	1001146183	1	Plate	
55	1001146244	1	Seal	
58	1001173166	1	Cover, Access (Tank Side)	
59	1001173170	1	Plate, Power Track Trough	
62	1001173185	1	Plate, Mounting	
63	1001173186	1	Bracket, Engine Tray	
64	1001173187	1	Bracket, Engine Tray	
65	1001250297	1	Bracket, Hood	

ITEM	PART NUMBER	QTY	DESCRIPTION	REV
66	1001173647	1	Support, Front Hood	
67	1001173651	1	Support, Front Hood	
68	1001175859	1	Plate, Power Track Trough	
70	1001175879	4	Hinge, Offset Hood	
71	1001175880	4	Plate	
73	1001180051	1	Cover, Access (Engine Side)	
74	88662523	1	Nut, Tinnerman	
75	3960447	10 ft/ 3.1m	Seal, Self-Gripping	
76	1001146132	1	Seal	
77	3760308	4	Retainer	
78	1001243414	2	U - Bolt	
79	3311601	8	Nut 3/8	
80	4891600	8	Washer 3/8	
100	1001175237	1	Kit, Hood	H
101	1001173163	1	Hood, Engine Side - Rear	
102	1001173164	1	Hood, Tank Side - Rear	
103	1001173183	1	Hood, Tank Side - Front	
104	1001173184	1	Hood, Engine Side - Front	
105	0641408	8	Bolt 1/4 x 1	
106	0700616	2	Bolt M6 x 40	
107	2560187	2	Handle, Push Button	
108	2940173	2	Latch, Rotary	
109	3290601	2	Nut M6	
110	3311505	6	Nut 5/16	
111	3900210	6	Screw 5/16 x 3/4	
112	3900363	4	Screw M6 x 25	
113	4711400	8	Washer 1/4	
114	4711500	6	Washer 5/16	
115	4751400	4	Washer 1/4	
116	1001116290	2	Plate, Latch Mounting	
117	0100011	1	Compound, Locking	

FIGURE 2-62. HOOD KIT DEUTZ TCD2.9L4 (CHINA IV) ENGINE

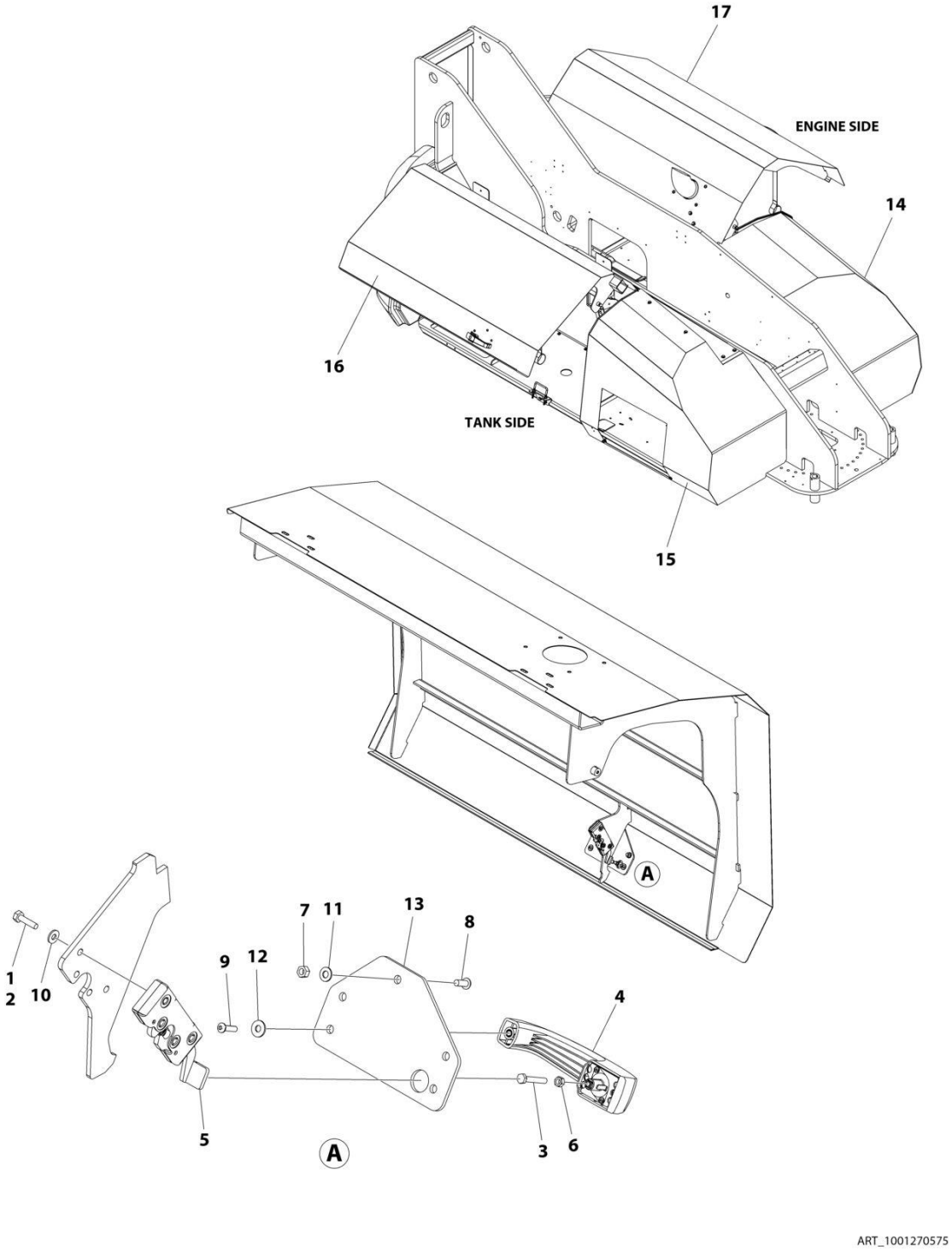

FIGURE 2-62. HOOD KIT DEUTZ TCD2.9L4 (CHINA IV) ENGINE

ITEM	PART NUMBER	QTY	DESCRIPTION	REV
	1001270575	Ref	HOOD KIT	B
1	0100011	AR	Compound, Locking	
2	0641408	8	Bolt 1/4 x 1	
3	0700616	2	Bolt M6 x 40	
4	2560187	2	Handle, Push Button	
5	2940173	2	Latch, Rotary	
6	3290601	2	Nut M6	
7	3311505	6	Nut 5/16	
8	3900210	6	Screw 5/16 x 3/4	
9	3900363	4	Screw M6 x 25	
10	4711400	8	Washer 1/4	
11	4711500	6	Washer 5/16	
12	4751400	4	Washer 1/4	
13	1001116290	2	Plate, Latch Mounting	
14	1001173163	1	Hood, Engine Side - Rear	
15	1001173164	1	Hood, Tank Side - Rear	
16	1001173183	1	Hood, Tank Side - Front	
17	1001270572	1	Hood, Engine Side - Front	

SECTION 3 - ENGINE

SECTION 3 - ENGINE

FIGURE 3-1. DEUTZ TD2011 ENGINE INSTALLATION - WITH REXROTH PUMPS AND ABS HOODS (WITHOUT SKYPOWER AND WITHOUT COLD WEATHER PLUS PACKAGE)

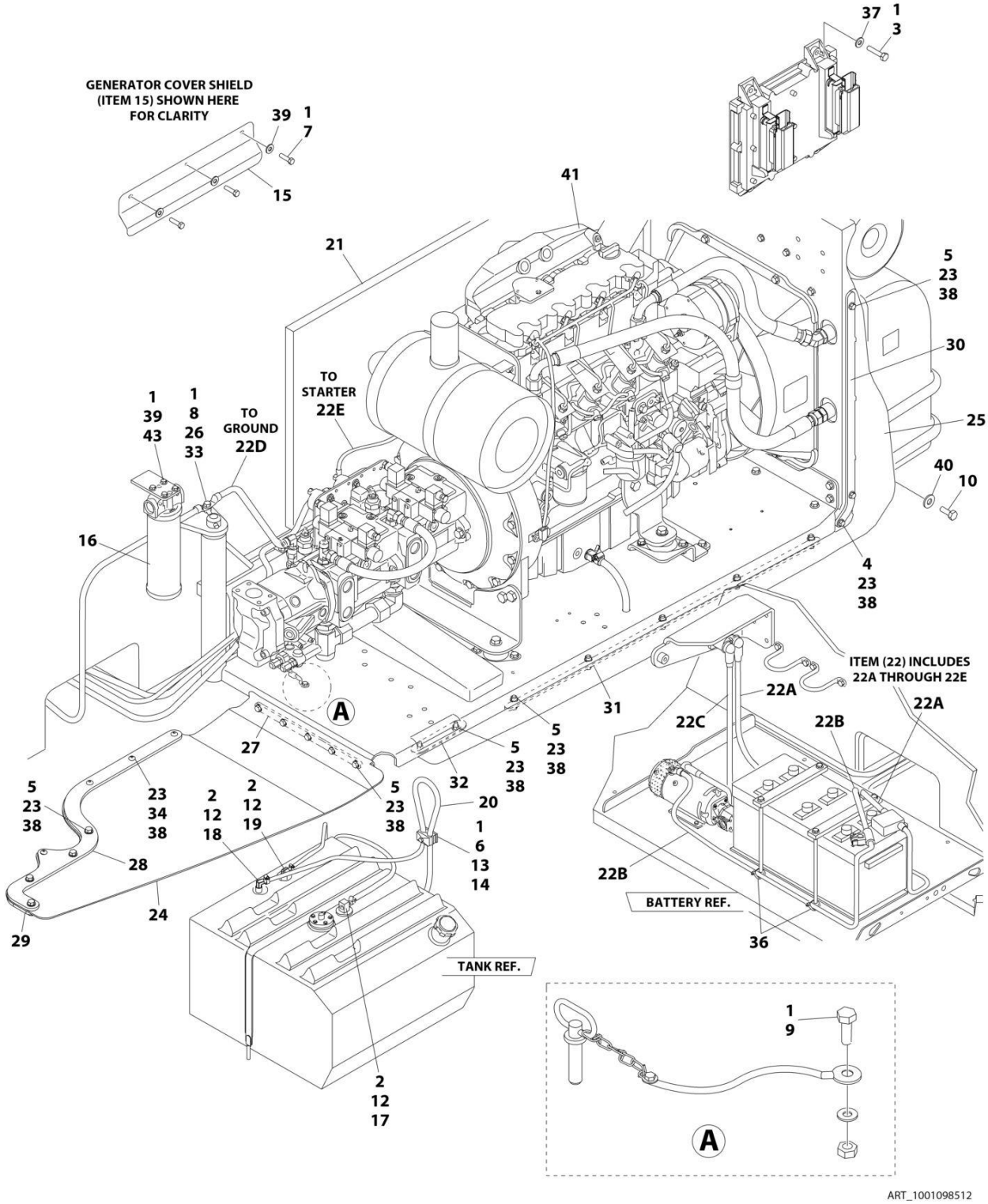

FIGURE 3-1. DEUTZ TD2011 ENGINE INSTALLATION - WITH REXROTH PUMPS AND ABS HOODS (WITHOUT SKYPOWER AND WITHOUT COLD WEATHER PLUS PACKAGE)

ITEM	PART NUMBER	QTY	DESCRIPTION	REV
	1001098512	Ref	DEUTZ TD2011 DIESEL ENGINE INSTALLATION - WITH REXROTH PUMPS AND ABS HOODS (WITHOUT SKYPOWER AND WITHOUT COLD WEATHER PLUS PACKAGE)	G
1	0100011	AR	Compound, Locking	
2	0100079	AR	Sealant, Pipe	
3	0641410	4	Bolt 1/4 x 1-1/4	
4	0641506	1	Bolt 5/16 x 3/4	
5	0641509	18	Bolt 5/16 x 1-1/8	
6	0641511	1	Bolt 5/16 x 1-3/8	
7	0641605	3	Bolt 3/8 x 5/8	
8	0641610	1	Bolt 3/8 x 1-1/4	
9	0641808	1	Bolt 1/2 x 1	
10	0642010	1	Bolt 5/8 x 1-1/4	
12	1320022	3	Clamp	
13	1320187	1	Clamp, Twin	
14	1320190	1	Cover, Clamp	
15	1671121	1	Cover, Generator	
16	1001108617	1	Pressure Filter	
16	70002231	1	Element, Filter	
17	2180348	1	Fitting, Barbed	
18	2220313	1	Fitting, Elbow Barbed	
19	2221176	1	Fitting, Elbow	
20	2750532	5 ft/ 1.5m	Hose	
21	2820170	1	Insulation, Sound Absorbing	
22	2902099	1	Battery Cable Kit	
22A	7024580	1	Cable, Red (To Aux Pump Relay, Battery Positive Terminal and Start Relay)	
22B	7024581	1	Cable, Black (To Aux Pump, Battery Negative Terminal and Ground at Tray Pivot)	
22C	7024582	1	Cable, Red (Aux Pump Relay to Aux Pump)	
22D	7024583	1	Cable, Black (Tray Pivot to Engine Mount)	
22E	7024584	1	Cable, Red (Start Relay to Starter)	
23	3311505	23	Nut 5/16	
24	3380472	1	Panel, Rubber	
25	3380473	1	Panel, Rubber	
26	3422446	1	Pin	
27	3573644	1	Plate, Tray Clamp	
28	3573645	1	Plate, Top Clamp	
29	3573646	1	Plate, Bottom Clamp	
30	3573669	1	Plate, Clamp	
31	3573727	1	Plate, Tray Clamp	
32	3573728	1	Plate, Tray Clamp	
33	3841143	1	Keeper, Pin	
34	3900272	4	Screw 5/16 x 1-3/4	
35	4240018	2	Strap, Tie (Not Shown)	
36	4240099	AR	Strap, Tie	
37	4711400	4	Washer 1/4	
38	4711500	42	Washer 5/16	
39	4711600	7	Washer 3/8	
40	4752000	1	Washer 5/8	

SECTION 3 - ENGINE

ITEM	PART NUMBER	QTY	DESCRIPTION	REV
41	1001098513	1	Engine Assembly with Pumps (See Separate Breakdown in this Section)	
43	0641606	4	Bolt 3/8 x 3/4	

FIGURE 3-2. DEUTZ TD2011 ENGINE INSTALLATION - WITH REXROTH PUMPS AND ABS HOODS (WITH SKYPOWER AND WITHOUT COLD WEATHER PLUS PACKAGE)

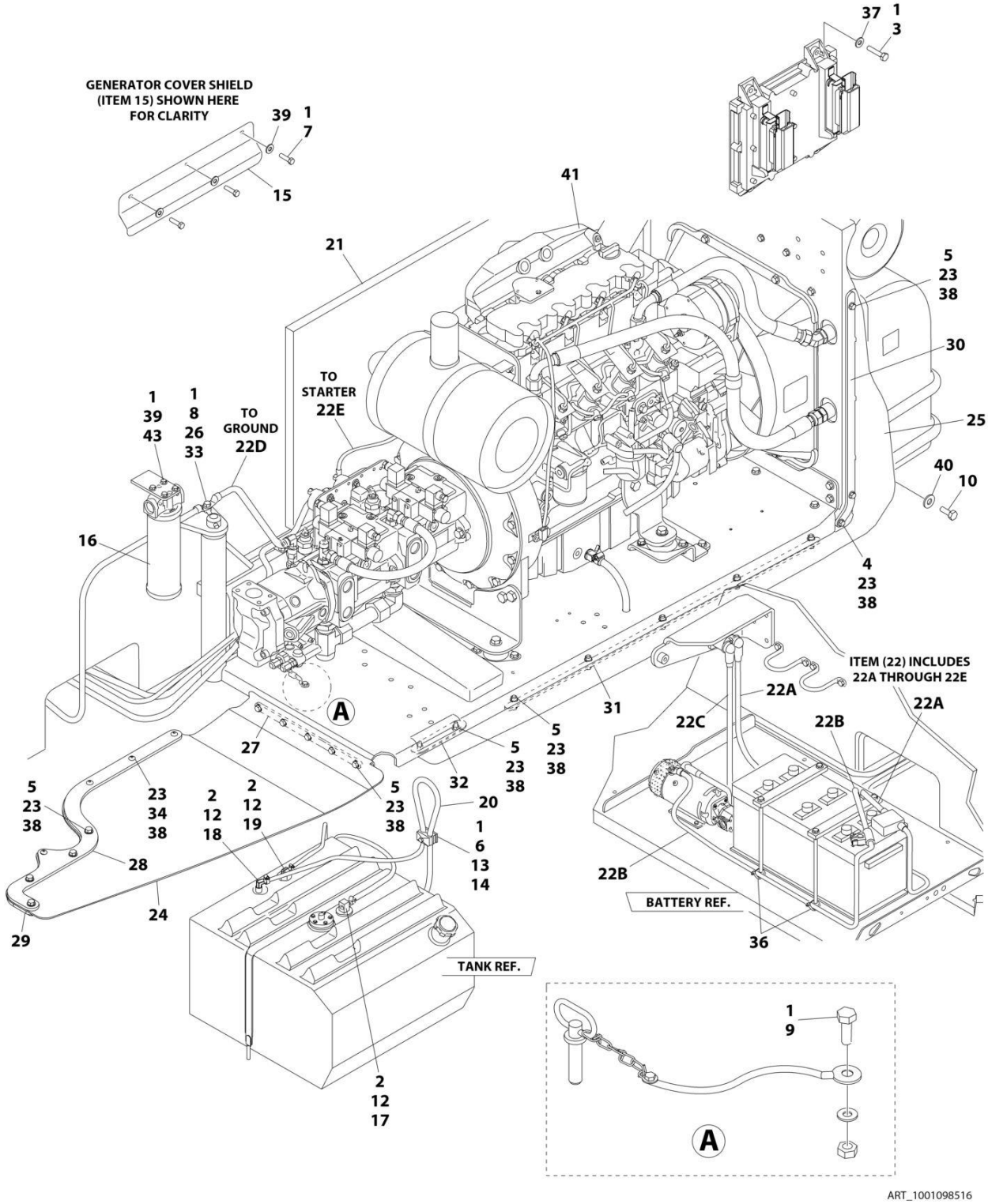

FIGURE 3-2. DEUTZ TD2011 ENGINE INSTALLATION - WITH REXROTH PUMPS AND ABS HOODS (WITH SKYPOWER AND WITHOUT COLD WEATHER PLUS PACKAGE)

ITEM	PART NUMBER	QTY	DESCRIPTION	REV
	1001098516	Ref	DEUTZ TD2011 DIESEL ENGINE INSTALLATION - WITH REXROTH PUMPS AND ABS HOODS (WITH SKYPOWER AND WITHOUT COLD WEATHER PLUS PACKAGE)	G
1	0100011	AR	Compound, Locking	
2	0100079	AR	Sealant, Pipe	
3	0641410	4	Bolt 1/4 x 1-1/4	
4	0641506	1	Bolt 5/16 x 3/4	
5	0641509	18	Bolt 5/16 x 1-1/8	
6	0641511	1	Bolt 5/16 x 1-3/8	
7	0641605	3	Bolt 3/8 x 5/8	
8	0641610	1	Bolt 3/8 x 1-1/4	
9	0641808	1	Bolt 1/2 x 1	
10	0642010	1	Bolt 5/8 x 1-1/4	
12	1320022	3	Clamp	
13	1320187	1	Clamp, Twin	
14	1320190	1	Cover, Clamp	
15	1671121	1	Cover, Generator	
16	1001108617	1	Pressure Filter	
16	70002231	1	Element, Filter	
17	2180348	1	Fitting, Barbed	
18	2220313	1	Fitting, Elbow Barbed	
19	2221176	1	Fitting, Elbow	
20	2750532	5 ft/ 1.5m	Hose	
21	2820170	1	Insulation, Sound Absorbing	
22	2902099	1	Battery Cable Kit	
22A	7024580	1	Cable, Red (To Aux Pump Relay, Battery Positive Terminal and Start Relay)	
22B	7024581	1	Cable, Black (To Aux Pump, Battery Negative Terminal and Ground at Tray Pivot)	
22C	7024582	1	Cable, Red (Aux Pump Relay to Aux Pump)	
22D	7024583	1	Cable, Black (Tray Pivot to Engine Mount)	
22E	7024584	1	Cable, Red (Start Relay to Starter)	
23	3311505	23	Nut 5/16	
24	3380472	1	Panel, Rubber	
25	3380473	1	Panel, Rubber	
26	3422446	1	Pin	
27	3573644	1	Plate, Tray Clamp	
28	3573645	1	Plate, Top Clamp	
29	3573646	1	Plate, Bottom Clamp	
30	3573669	1	Plate, Clamp	
31	3573727	1	Plate, Tray Clamp	
32	3573728	1	Plate, Tray Clamp	
33	3841143	1	Keeper, Pin	
34	3900272	4	Screw 5/16 x 1-3/4	
35	4240018	2	Strap, Tie (Not Shown)	
36	4240099	AR	Strap, Tie	
37	4711400	4	Washer 1/4	
38	4711500	42	Washer 5/16	
39	4711600	7	Washer 3/8	
40	4752000	1	Washer 5/8	

SECTION 3 - ENGINE

ITEM	PART NUMBER	QTY	DESCRIPTION	REV
41	1001098530	1	Engine Assembly with Pumps (See Separate Breakdown in this Section)	
43	0641606	4	Bolt 3/8 x 3/4	

FIGURE 3-3. DEUTZ TD2011 ENGINE INSTALLATION - WITH REXROTH PUMPS AND STEEL HOOD (WITHOUT SKYPOWER AND WITHOUT COLD WEATHER PLUS PACKAGE)

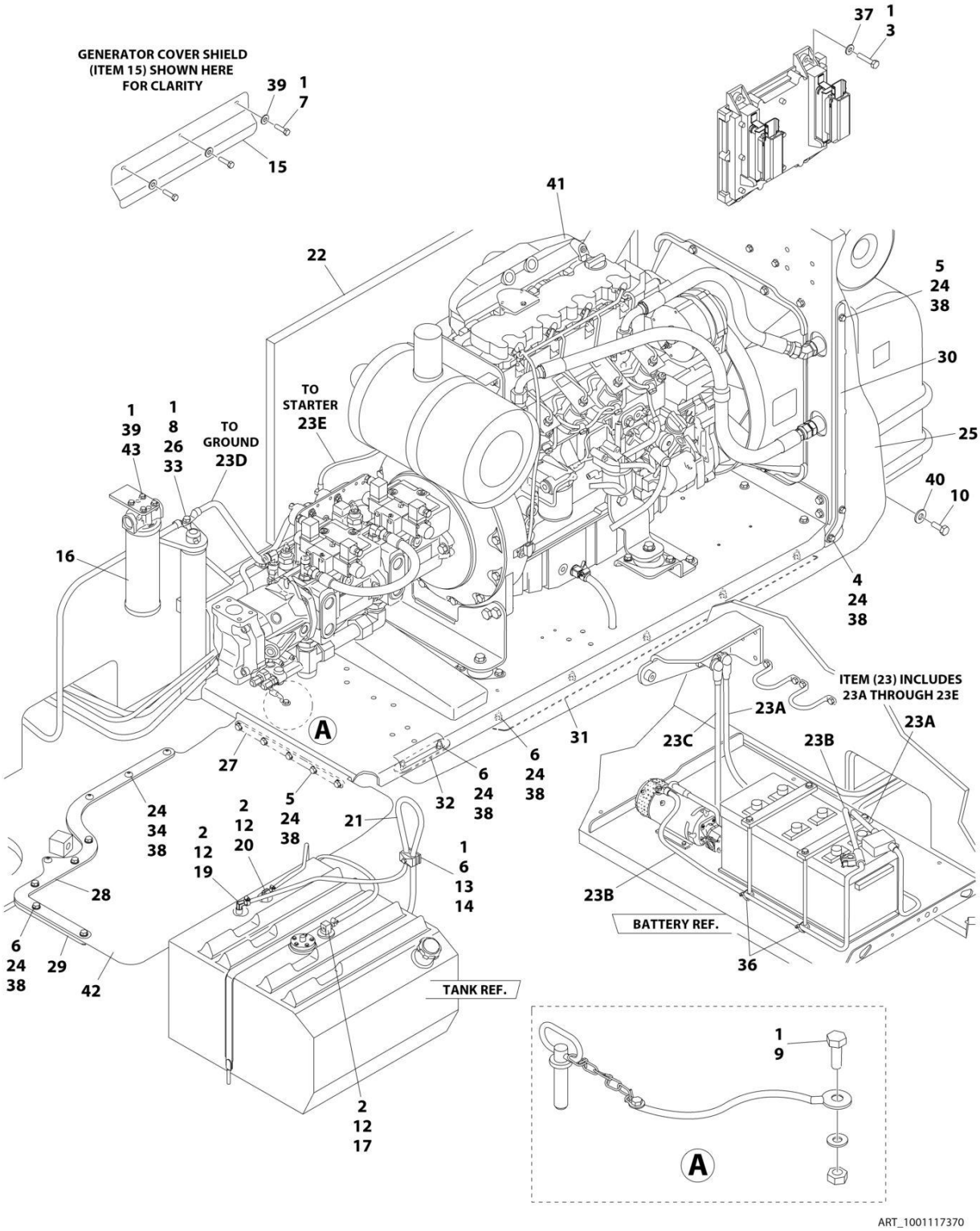

FIGURE 3-3. DEUTZ TD2011 ENGINE INSTALLATION - WITH REXROTH PUMPS AND STEEL HOOD (WITHOUT SKYPOWER AND WITHOUT COLD WEATHER PLUS PACKAGE)

ITEM	PART NUMBER	QTY	DESCRIPTION	REV
	1001117370	Ref	DEUTZ TD2011 DIESEL ENGINE INSTALLATION - WITH REXROTH PUMPS AND STEEL HOOD (WITHOUT SKYPOWER AND WITHOUT COLD WEATHER PLUS PACKAGE)	D
1	0100011	AR	Compound, Locking	
2	0100079	AR	Sealant, Pipe	
3	0641410	4	Bolt 1/4 x 1-1/4	
4	0641506	1	Bolt 5/16 x 3/4	
5	0641509	7	Bolt 5/16 x 1-1/8	
6	0641511	13	Bolt 5/16 x 1-3/8	
7	0641605	3	Bolt 3/8 x 5/8	
8	0641610	1	Bolt 3/8 x 1-1/4	
9	0641808	1	Bolt 1/2 x 1	
10	0642010	1	Bolt 5/8 x 1-1/4	
12	1320022	3	Clamp	
13	1320187	1	Clamp, Twin	
14	1320190	1	Cover, Clamp	
15	1671121	1	Cover, Generator	
16	1001108617	1	Pressure Filter	
16	70002231	1	Element, Filter	
17	2180348	1	Fitting, Barbed	
19	2220313	1	Fitting, Elbow Barbed	
20	2221176	1	Fitting, Elbow	
21	2750532	5 ft/ 1.5m	Hose	
22	2820170	1	Insulation, Sound Absorbing	
23	2902099	1	Battery Cable Kit	
23A	7024580	1	Cable, Red (To Aux Pump Relay, Battery Positive Terminal and Start Relay)	
23B	7024581	1	Cable, Black (To Aux Pump, Battery Negative Terminal and Ground at Tray Pivot)	
23C	7024582	1	Cable, Red (Aux Pump Relay to Aux Pump)	
23D	7024583	1	Cable, Black (Tray Pivot to Engine Mount)	
23E	7024584	1	Cable, Red (Start Relay to Starter)	
24	3311505	24	Nut 5/16	
25	3380473	1	Panel, Rubber	
26	3422446	1	Pin	
27	3573644	1	Plate, Tray Clamp	
28	1001112878	1	Plate, Top Clamp	
29	1001112879	1	Plate, Bottom Clamp	
30	3573669	1	Plate, Clamp	
31	1001112880	1	Plate, Tray Clamp	
32	3573728	1	Plate, Tray Clamp	
33	3841143	1	Keeper, Pin	
34	3900272	4	Screw 5/16 x 1-3/4	
35	4240018	2	Strap, Tie (Not Shown)	
36	4240099	AR	Strap, Tie	
37	4711400	4	Washer 1/4	
38	4711500	44	Washer 5/16	
39	4711600	7	Washer 3/8	
40	4752000	1	Washer 5/8	

SECTION 3 - ENGINE

ITEM	PART NUMBER	QTY	DESCRIPTION	REV
41	1001098513	1	Engine Assembly with Pumps (See Separate Breakdown in this Section)	
42	1001111132	1	Panel, Rubber	
43	0641606	4	Bolt 3/8 x 3/4	

FIGURE 3-4. DEUTZ TD2011 ENGINE INSTALLATION - WITH REXROTH PUMPS AND STEEL HOODS (WITH SKYPOWER AND WITHOUT COLD WEATHER PLUS PACKAGE)

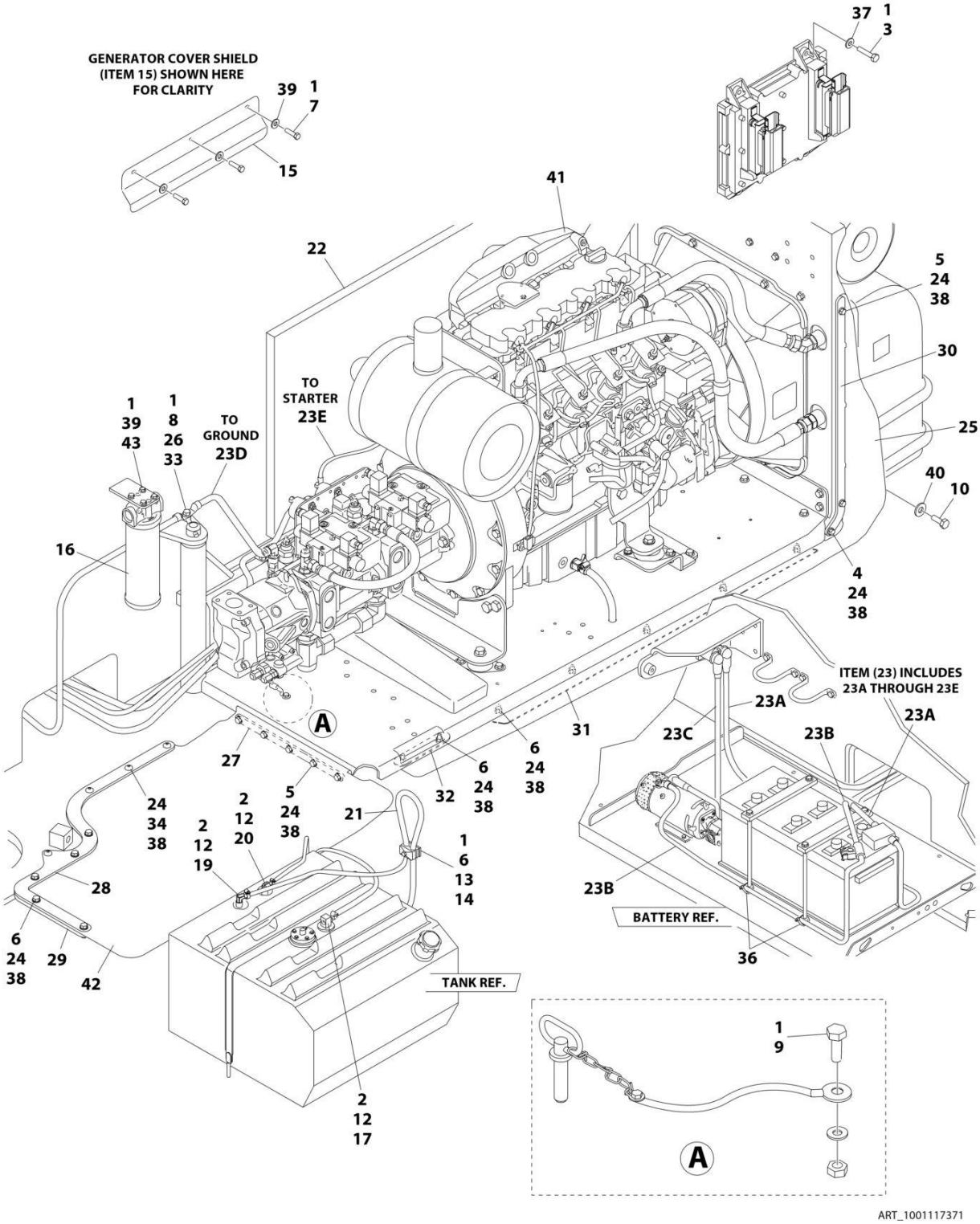

FIGURE 3-4. DEUTZ TD2011 ENGINE INSTALLATION - WITH REXROTH PUMPS AND STEEL HOODS (WITH SKYPOWER AND WITHOUT COLD WEATHER PLUS PACKAGE)

ITEM	PART NUMBER	QTY	DESCRIPTION	REV
	1001117371	Ref	DEUTZ TD2011 DIESEL ENGINE INSTALLATION - WITH REXROTH PUMPS AND STEEL HOODS (WITH SKYPOWER AND WITHOUT COLD WEATHER PLUS PACKAGE)	D
1	0100011	AR	Compound, Locking	
2	0100079	AR	Sealant, Pipe	
3	0641410	4	Bolt 1/4 x 1-1/4	
4	0641506	1	Bolt 5/16 x 3/4	
5	0641509	7	Bolt 5/16 x 1-1/8	
6	0641511	13	Bolt 5/16 x 1-3/8	
7	0641605	3	Bolt 3/8 x 5/8	
8	0641610	1	Bolt 3/8 x 1-1/4	
9	0641808	1	Bolt 1/2 x 1	
10	0642010	1	Bolt 5/8 x 1-1/4	
12	1320022	3	Clamp	
13	1320187	1	Clamp, Twin	
14	1320190	1	Cover, Clamp	
15	1671121	1	Cover, Generator	
16	1001108617	1	Pressure Filter	
16	70002231	1	Element, Filter	
17	2180348	1	Fitting, Barbed	
19	2220313	1	Fitting, Elbow Barbed	
20	2221176	1	Fitting, Elbow	
21	2750532	5 ft/ 1.5m	Hose	
22	2820170	1	Insulation, Sound Absorbing	
23	2902099	1	Battery Cable Kit	
23A	7024580	1	Cable, Red (To Aux Pump Relay, Battery Positive Terminal and Start Relay)	
23B	7024581	1	Cable, Black (To Aux Pump, Battery Negative Terminal and Ground at Tray Pivot)	
23C	7024582	1	Cable, Red (Aux Pump Relay to Aux Pump)	
23D	7024583	1	Cable, Black (Tray Pivot to Engine Mount)	
23E	7024584	1	Cable, Red (Start Relay to Starter)	
24	3311505	24	Nut 5/16	
25	3380473	1	Panel, Rubber	
26	3422446	1	Pin	
27	3573644	1	Plate, Tray Clamp	
28	1001112878	1	Plate, Top Clamp	
29	1001112879	1	Plate, Bottom Clamp	
30	3573669	1	Plate, Clamp	
31	1001112880	1	Plate, Tray Clamp	
32	3573728	1	Plate, Tray Clamp	
33	3841143	1	Keeper, Pin	
34	3900272	4	Screw 5/16 x 1-3/4	
35	4240018	2	Strap, Tie (Not Shown)	
36	4240099	AR	Strap, Tie	
37	4711400	4	Washer 1/4	
38	4711500	44	Washer 5/16	
39	4711600	7	Washer 3/8	
40	4752000	1	Washer 5/8	

SECTION 3 - ENGINE

ITEM	PART NUMBER	QTY	DESCRIPTION	REV
41	1001098530	1	Engine Assembly with Pumps (See Separate Breakdown in this Section)	
42	1001111132	1	Panel, Rubber	
43	0641606	4	Bolt 3/8 x 3/4	

FIGURE 3-5. DEUTZ TD2011 ENGINE INSTALLATION - WITH REXROTH PUMPS AND STEEL HOODS (WITH SKYPOWER AND WITH COLD WEATHER PLUS PACKAGE)

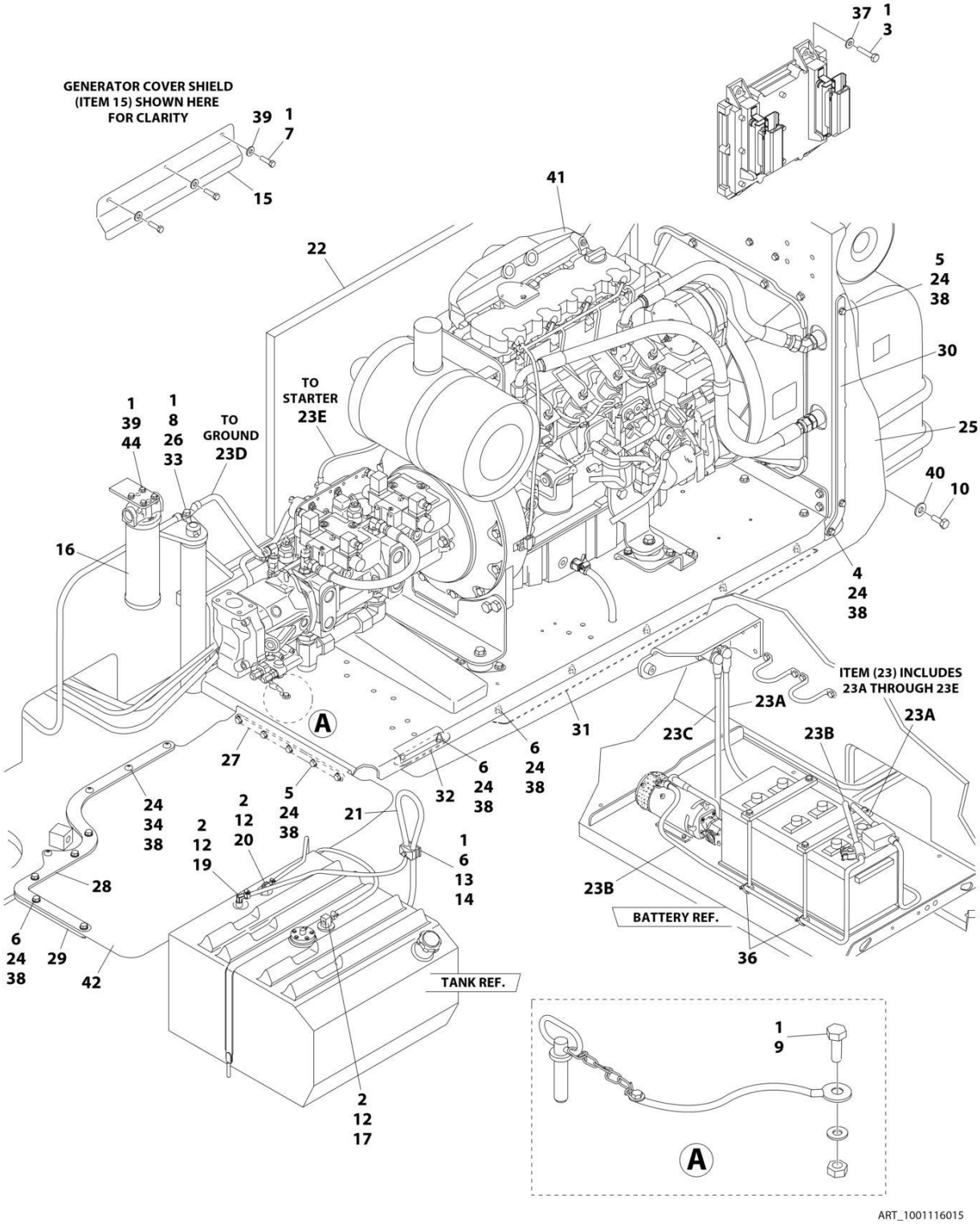

ART_1001116015

FIGURE 3-5. DEUTZ TD2011 ENGINE INSTALLATION - WITH REXROTH PUMPS AND STEEL HOODS (WITH SKYPOWER AND WITH COLD WEATHER PLUS PACKAGE)

ITEM	PART NUMBER	QTY	DESCRIPTION	REV
	1001116015	Ref	DEUTZ TD2011 DIESEL ENGINE INSTALLATION - WITH REXROTH PUMPS AND STEEL HOODS (WITH SKYPOWER AND WITH COLD WEATHER PLUS PACKAGE)	D
1	0100011	AR	Compound, Locking	
2	0100079	AR	Sealant, Pipe	
3	0641410	4	Bolt 1/4 x 1-1/4	
4	0641506	1	Bolt 5/16 x 3/4	
5	0641509	7	Bolt 5/16 x 1-1/8	
6	0641511	13	Bolt 5/16 x 1-3/8	
7	0641605	3	Bolt 3/8 x 5/8	
8	0641610	1	Bolt 3/8 x 1-1/4	
9	0641808	1	Bolt 1/2 x 1	
10	0642010	1	Bolt 5/8 x 1-1/4	
12	1320022	3	Clamp	
13	1320187	1	Clamp, Twin	
14	1320190	1	Cover, Clamp	
15	1671121	1	Cover, Generator	
16	1001108617	1	Pressure Filter	
16	70002231	1	Element, Filter	
17	2180348	1	Fitting, Barbed	
19	2220313	1	Fitting, Elbow Barbed	
20	2221176	1	Fitting, Elbow	
21	2750532	5 ft/ 1.5m	Hose	
22	2820170	1	Insulation, Sound Absorbing	
23	2902099	1	Battery Cable Kit	
23A	7024580	1	Cable, Red (To Aux Pump Relay, Battery Positive Terminal and Start Relay)	
23B	7024581	1	Cable, Black (To Aux Pump, Battery Negative Terminal and Ground at Tray Pivot)	
23C	7024582	1	Cable, Red (Aux Pump Relay to Aux Pump)	
23D	7024583	1	Cable, Black (Tray Pivot to Engine Mount)	
23E	7024584	1	Cable, Red (Start Relay to Starter)	
24	3311505	24	Nut 5/16	
25	3380473	1	Panel, Rubber	
26	3422446	1	Pin	
27	3573644	1	Plate, Tray Clamp	
28	1001112878	1	Plate, Top Clamp	
29	1001112879	1	Plate, Bottom Clamp	
30	3573669	1	Plate, Clamp	
31	1001112880	1	Plate, Tray Clamp	
32	3573728	1	Plate, Tray Clamp	
33	3841143	1	Keeper, Pin	
34	3900272	4	Screw, Button 5/16 x 1-3/4	
35	4240018	2	Strap, Tie (Not Shown)	
36	4240099	AR	Strap, Tie	
37	4711400	4	Washer 1/4	
38	4711500	44	Washer 5/16	
39	4711600	7	Washer 3/8	
40	4752000	1	Washer 5/8	

SECTION 3 - ENGINE

ITEM	PART NUMBER	QTY	DESCRIPTION	REV
41	1001098531	1	Engine Assembly with Pumps (See Separate Breakdown in this Section)	
42	1001111132	1	Panel, Rubber	
43	1702942	1	Decal - Block Heater (Not Shown)	
44	0641606	4	Bolt 3/8 x 3/4	

FIGURE 3-6. DEUTZ TD2011 ENGINE INSTALLATION - WITH SAUER PUMPS AND ABS HOODS (WITHOUT SKYPOWER AND WITHOUT COLD WEATHER PLUS PACKAGE)

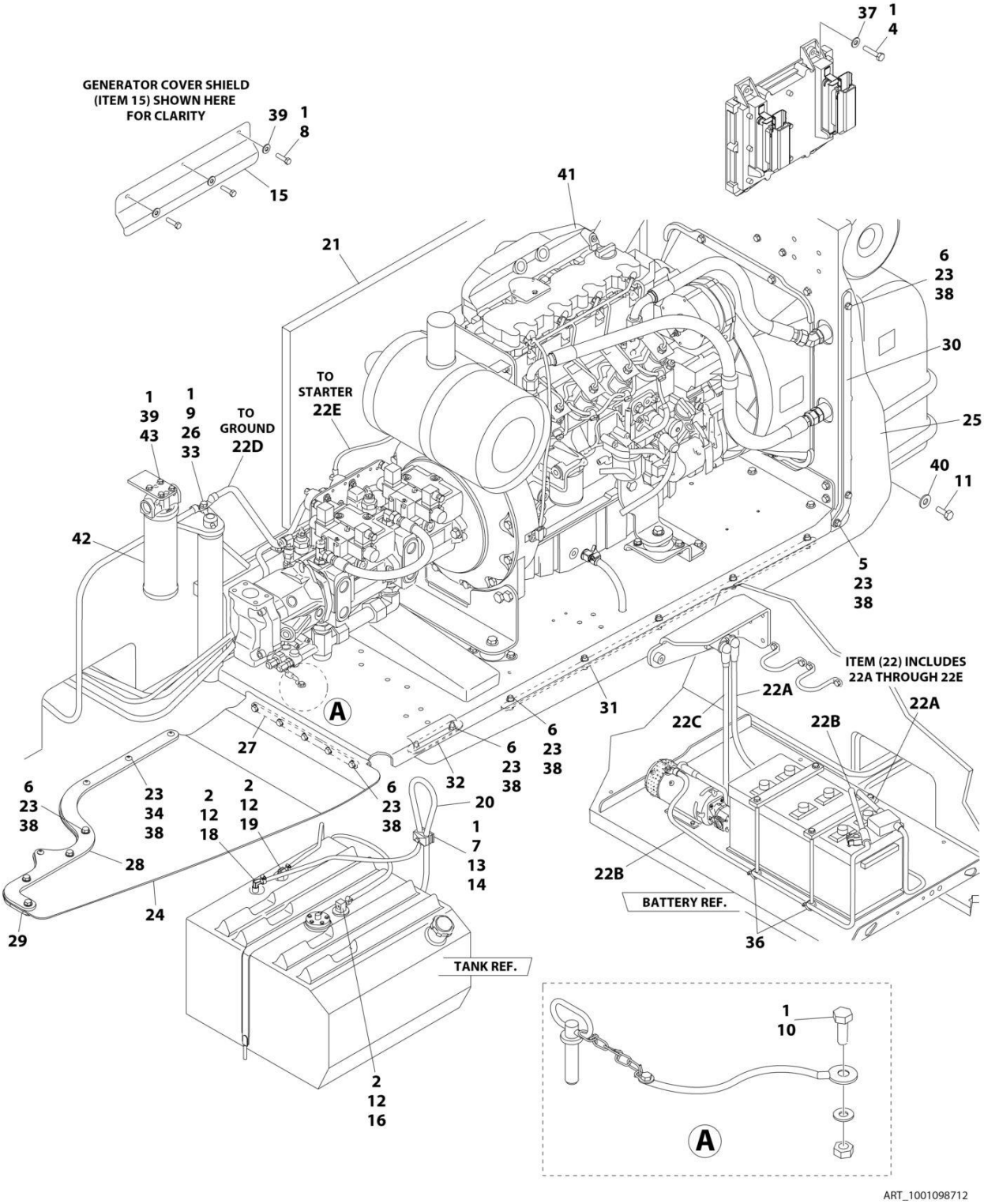

FIGURE 3-6. DEUTZ TD2011 ENGINE INSTALLATION - WITH SAUER PUMPS AND ABS HOODS (WITHOUT SKYPOWER AND WITHOUT COLD WEATHER PLUS PACKAGE)

ITEM	PART NUMBER	QTY	DESCRIPTION	REV
	1001118712	Ref	DEUTZ TD2011 DIESEL ENGINE INSTALLATION - WITH SAUER PUMPS AND ABS HOODS (WITHOUT SKYPOWER AND WITHOUT COLD WEATHER PLUS PACKAGE)	E
1	0100011	AR	Compound, Locking	
2	0100079	AR	Sealant, Pipe	
3	0641410	4	Bolt 1/4 x 1-1/4	
4	0641506	1	Bolt 5/16 x 3/4	
5	0641509	18	Bolt 5/16 x 1-1/8	
6	0641511	1	Bolt 5/16 x 1-3/8	
7	0641605	3	Bolt 3/8 x 5/8	
8	0641610	1	Bolt 3/8 x 1-1/4	
9	0641808	1	Bolt 1/2 x 1	
10	0642010	1	Bolt 5/8 x 1-1/4	
12	1320022	3	Clamp	
13	1320187	1	Clamp, Twin	
14	1320190	1	Cover, Clamp	
15	1671121	1	Cover, Generator	
16	2180348	1	Fitting, Barbed	
18	2220313	1	Fitting, Elbow Barbed	
19	2221176	1	Fitting, Elbow	
20	2750532	5 ft/ 1.5m	Hose	
21	2820170	1	Insulation, Sound Absorbing	
22	2902099	1	Battery Cable Kit	
22A	7024580	1	Cable, Red (To Aux Pump Relay, Battery Positive Terminal and Start Relay)	
22B	7024581	1	Cable, Black (To Aux Pump, Battery Negative Terminal and Ground at Tray Pivot)	
22C	7024582	1	Cable, Red (Aux Pump Relay to Aux Pump)	
22D	7024583	1	Cable, Black (Tray Pivot to Engine Mount)	
22E	7024584	1	Cable, Red (Start Relay to Starter)	
23	3311505	23	Nut 5/16	
24	3380472	1	Panel, Rubber	
25	3380473	1	Panel, Rubber	
26	3422446	1	Pin	
27	3573644	1	Plate, Tray Clamp	
28	3573645	1	Plate, Top Clamp	
29	3573646	1	Plate, Bottom Clamp	
30	3573669	1	Plate, Clamp	
31	3573727	1	Plate, Tray Clamp	
32	3573728	1	Plate, Tray Clamp	
33	3841143	1	Keeper, Pin	
34	3900272	4	Screw, Button 5/16 x 1-3/4	
35	4240018	2	Strap, Tie (Not Shown)	
36	4240099	AR	Strap, Tie	
37	4711400	4	Washer 1/4	
38	4711500	42	Washer 5/16	
39	4711600	7	Washer 3/8	
40	4752000	1	Washer 5/8	
41	1001107971	1	Engine Assembly with Pumps (See Separate Breakdown in this Section)	

ITEM	PART NUMBER	QTY	DESCRIPTION	REV
42	1001108617	1	Pressure Filter	
42	70002231	1	Element, Filter	
43	0641606	4	Bolt 3/8 x 3/4	

FIGURE 3-7. DEUTZ TD2011 ENGINE INSTALLATION - WITH SAUER PUMPS AND ABS HOODS (WITH SKYPOWER AND WITHOUT COLD WEATHER PLUS PACKAGE)

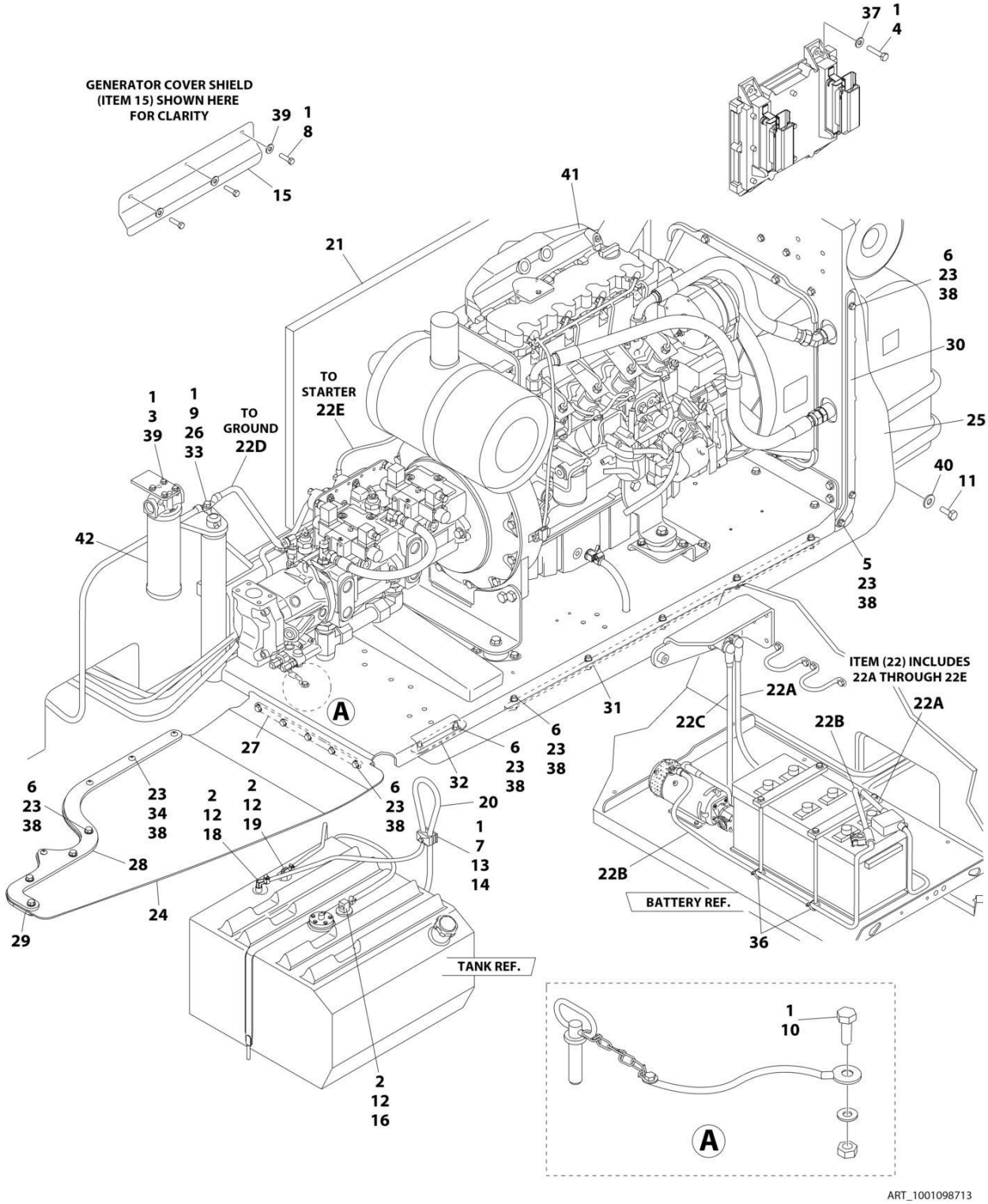

FIGURE 3-7. DEUTZ TD2011 ENGINE INSTALLATION - WITH SAUER PUMPS AND ABS HOODS (WITH SKYPOWER AND WITHOUT COLD WEATHER PLUS PACKAGE)

ITEM	PART NUMBER	QTY	DESCRIPTION	REV
	1001118713	Ref	DEUTZ TD2011 DIESEL ENGINE INSTALLATION - WITH SAUER PUMPS AND ABS HOODS (WITH SKYPOWER AND WITHOUT COLD WEATHER PLUS PACKAGE)	E
1	0100011	AR	Compound, Locking	
2	0100079	AR	Sealant, Pipe	
3	0641606	4	Bolt 3/8 x 3/4	
4	0641410	4	Bolt 1/4 x 1-1/4	
5	0641506	1	Bolt 5/16 x 3/4	
6	0641509	18	Bolt 5/16 x 1-1/8	
7	0641511	1	Bolt 5/16 x 1-3/8	
8	0641605	3	Bolt 3/8 x 5/8	
9	0641610	1	Bolt 3/8 x 1-1/4	
10	0641808	1	Bolt 1/2 x 1	
11	0642010	1	Bolt 5/8 x 1-1/4	
12	1320022	3	Clamp	
13	1320187	1	Clamp, Twin	
14	1320190	1	Cover, Clamp	
15	1671121	1	Cover, Generator	
16	2180348	1	Fitting, Barbed	
18	2220313	1	Fitting, Elbow Barbed	
19	2221176	1	Fitting, Elbow	
20	2750532	5 ft/ 1.5m	Hose	
21	2820170	1	Insulation, Sound Absorbing	
22	2902099	1	Battery Cable Kit	
22A	7024580	1	Cable, Red (To Aux Pump Relay, Battery Positive Terminal and Start Relay)	
22B	7024581	1	Cable, Black (To Aux Pump, Battery Negative Terminal and Ground at Tray Pivot)	
22C	7024582	1	Cable, Red (Aux Pump Relay to Aux Pump)	
22D	7024583	1	Cable, Black (Tray Pivot to Engine Mount)	
22E	7024584	1	Cable, Red (Start Relay to Starter)	
23	3311505	23	Nut 5/16	
24	3380472	1	Panel, Rubber	
25	3380473	1	Panel, Rubber	
26	3422446	1	Pin	
27	3573644	1	Plate, Tray Clamp	
28	3573645	1	Plate, Top Clamp	
29	3573646	1	Plate, Bottom Clamp	
30	3573669	1	Plate, Clamp	
31	3573727	1	Plate, Tray Clamp	
32	3573728	1	Plate, Tray Clamp	
33	3841143	1	Keeper, Pin	
34	3900272	4	Screw, Button 5/16 x 1-3/4	
35	4240018	2	Strap, Tie (Not Shown)	
36	4240099	AR	Strap, Tie	
37	4711400	4	Washer 1/4	
38	4711500	42	Washer 5/16	
39	4711600	7	Washer 3/8	
40	4752000	1	Washer 5/8	

SECTION 3 - ENGINE

ITEM	PART NUMBER	QTY	DESCRIPTION	REV
41	1001107973	1	Engine Assembly with Pumps (See Separate Breakdown in this Section)	
42	1001108617	1	Pressure Filter	
42	70002231	1	Element, Filter	

FIGURE 3-8. DEUTZ TD2011 ENGINE INSTALLATION - WITH SAUER PUMPS AND STEEL HOODS (WITHOUT SKYPOWER AND WITHOUT COLD WEATHER PLUS PACKAGE)

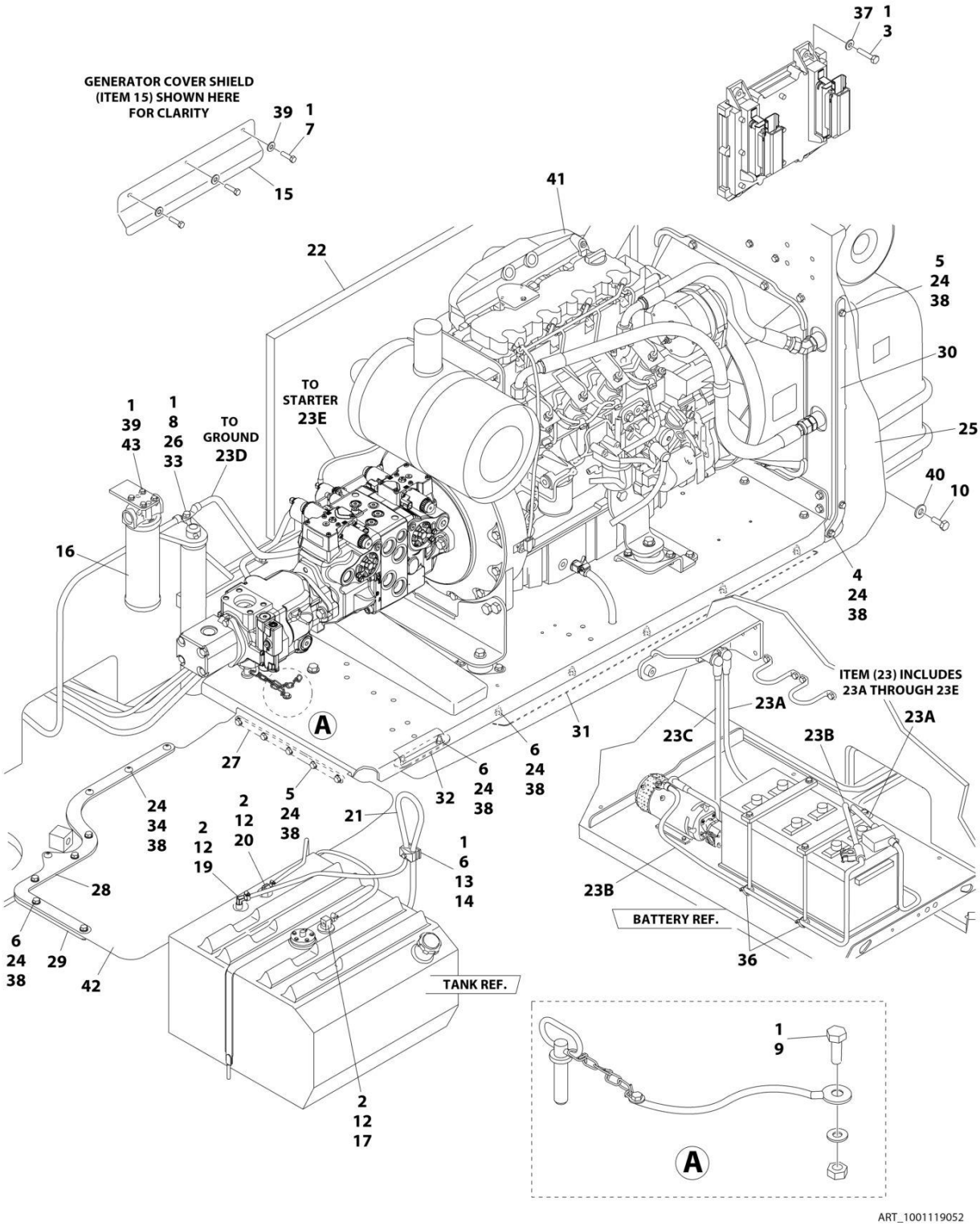

FIGURE 3-8. DEUTZ TD2011 ENGINE INSTALLATION - WITH SAUER PUMPS AND STEEL HOODS (WITHOUT SKYPOWER AND WITHOUT COLD WEATHER PLUS PACKAGE)

ITEM	PART NUMBER	QTY	DESCRIPTION	REV
	1001119052	Ref	DEUTZ TD2011 DIESEL ENGINE INSTALLATION - WITH SAUER PUMPS AND STEEL HOODS (WITHOUT SKYPOWER AND WITHOUT COLD WEATHER PLUS PACKAGE)	D
1	0100011	AR	Compound, Locking	
2	0100079	AR	Sealant, Pipe	
3	0641410	4	Bolt 1/4 x 1-1/4	
4	0641506	1	Bolt 5/16 x 3/4	
5	0641509	7	Bolt 5/16 x 1-1/8	
6	0641511	13	Bolt 5/16 x 1-3/8	
7	0641605	3	Bolt 3/8 x 5/8	
8	0641610	1	Bolt 3/8 x 1-1/4	
9	0641808	1	Bolt 1/2 x 1	
10	0642010	1	Bolt 5/8 x 1-1/4	
12	1320022	3	Clamp	
13	1320187	1	Clamp, Twin	
14	1320190	1	Cover, Clamp	
15	1671121	1	Cover, Generator	
16	1001108617	1	Pressure Filter	
16	70002231	1	Element, Filter	
17	2180348	1	Fitting, Barbed	
19	2220313	1	Fitting, Elbow Barbed	
20	2221176	1	Fitting, Elbow	
21	2750532	5 ft/ 1.5m	Hose	
22	2820170	1	Insulation, Sound Absorbing	
23	2902099	1	Battery Cable Kit	
23A	7024580	1	Cable, Red (To Aux Pump Relay, Battery Positive Terminal and Start Relay)	
23B	7024581	1	Cable, Black (To Aux Pump, Battery Negative Terminal and Ground at Tray Pivot)	
23C	7024582	1	Cable, Red (Aux Pump Relay to Aux Pump)	
23D	7024583	1	Cable, Black (Tray Pivot to Engine Mount)	
23E	7024584	1	Cable, Red (Start Relay to Starter)	
24	3311505	24	Nut 5/16	
25	3380473	1	Panel, Rubber	
26	3422446	1	Pin	
27	3573644	1	Plate, Tray Clamp	
28	1001112878	1	Plate, Top Clamp	
29	1001112879	1	Plate, Bottom Clamp	
30	3573669	1	Plate, Clamp	
31	1001112880	1	Plate, Tray Clamp	
32	3573728	1	Plate, Tray Clamp	
33	3841143	1	Keeper, Pin	
34	3900272	4	Screw 5/16 x 1-3/4	
35	4240018	2	Strap, Tie (Not Shown)	
36	4240099	AR	Strap, Tie	
37	4711400	4	Washer 1/4	
38	4711500	44	Washer 5/16	
39	4711600	7	Washer 3/8	
40	4752000	1	Washer 5/8	

SECTION 3 - ENGINE

ITEM	PART NUMBER	QTY	DESCRIPTION	REV
41	1001107971	1	Engine Assembly with Pumps (See Separate Breakdown in this Section)	
42	1001111132	1	Panel, Rubber	
43	0641606	4	Bolt 3/8 x 3/4	

FIGURE 3-9. DEUTZ TD2011 ENGINE INSTALLATION - WITH SAUER PUMPS AND STEEL HOODS (WITH SKYPOWER AND WITH COLD WEATHER PLUS PACKAGE)

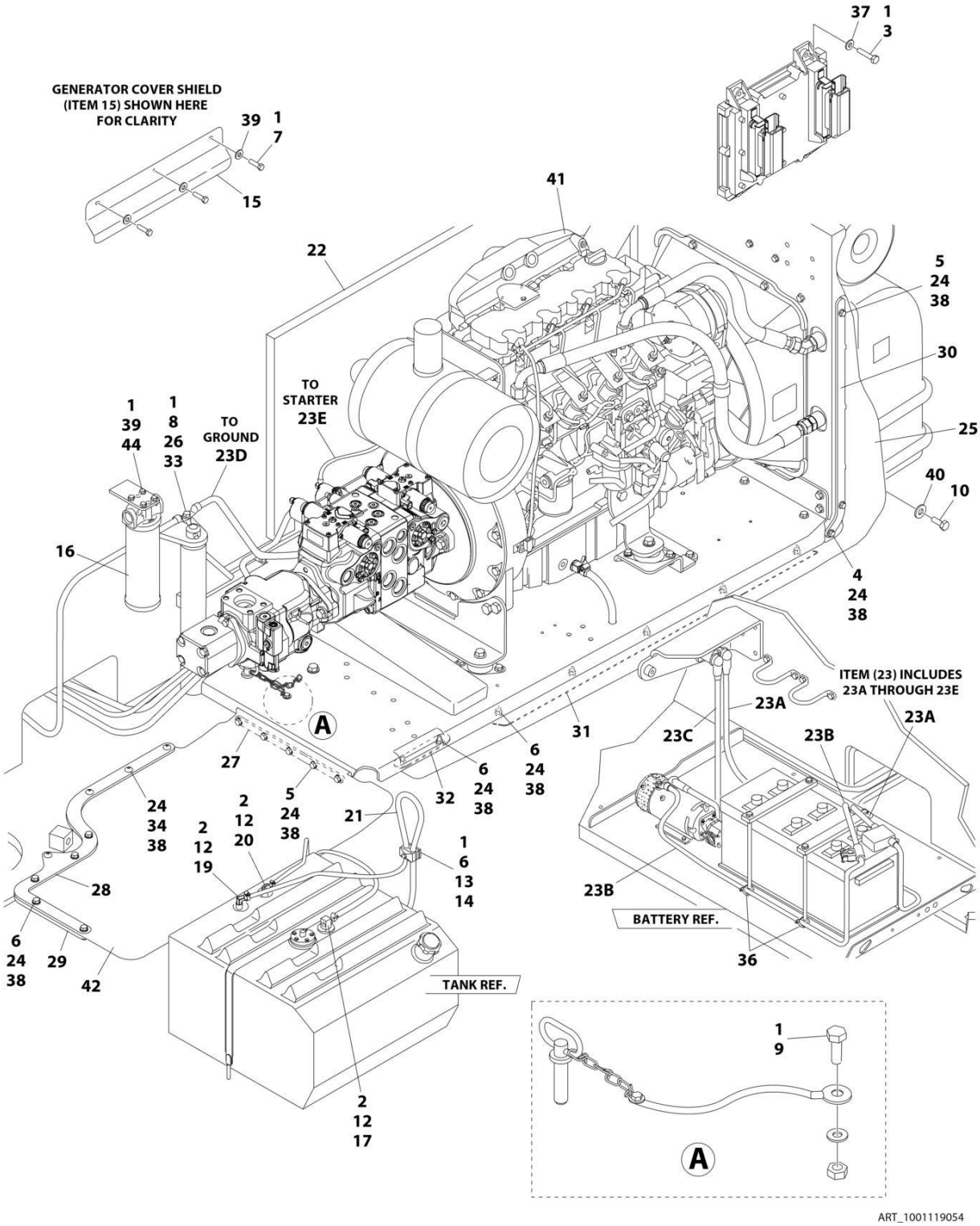

FIGURE 3-9. DEUTZ TD2011 ENGINE INSTALLATION - WITH SAUER PUMPS AND STEEL HOODS (WITH SKYPOWER AND WITH COLD WEATHER PLUS PACKAGE)

ITEM	PART NUMBER	QTY	DESCRIPTION	REV
	1001119054	Ref	DEUTZ TD2011 DIESEL ENGINE INSTALLATION - WITH SAUER PUMPS AND STEEL HOODS (WITH SKYPOWER AND WITH COLD WEATHER PLUS PACKAGE)	D
1	0100011	AR	Compound, Locking	
2	0100079	AR	Sealant, Pipe	
3	0641410	4	Bolt 1/4 x 1-1/4	
4	0641506	1	Bolt 5/16 x 3/4	
5	0641509	7	Bolt 5/16 x 1-1/8	
6	0641511	13	Bolt 5/16 x 1-3/8	
7	0641605	3	Bolt 3/8 x 5/8	
8	0641610	1	Bolt 3/8 x 1-1/4	
9	0641808	1	Bolt 1/2 x 1	
10	0642010	1	Bolt 5/8 x 1-1/4	
12	1320022	3	Clamp	
13	1320187	1	Clamp, Twin	
14	1320190	1	Cover, Clamp	
15	1671121	1	Cover, Generator	
16	1001108617	1	Pressure Filter	
16	70002231	1	Element, Filter	
17	2180348	1	Fitting, Barbed	
19	2220313	1	Fitting, Elbow Barbed	
20	2221176	1	Fitting, Elbow	
21	2750532	5 ft/ 1.5m	Hose	
22	2820170	1	Insulation, Sound Absorbing	
23	2902099	1	Battery Cable Kit	
23A	7024580	1	Cable, Red (To Aux Pump Relay, Battery Positive Terminal and Start Relay)	
23B	7024581	1	Cable, Black (To Aux Pump, Battery Negative Terminal and Ground at Tray Pivot)	
23C	7024582	1	Cable, Red (Aux Pump Relay to Aux Pump)	
23D	7024583	1	Cable, Black (Tray Pivot to Engine Mount)	
23E	7024584	1	Cable, Red (Start Relay to Starter)	
24	3311505	24	Nut 5/16	
25	3380473	1	Panel, Rubber	
26	3422446	1	Pin	
27	3573644	1	Plate, Tray Clamp	
28	1001112878	1	Plate, Top Clamp	
29	1001112879	1	Plate, Bottom Clamp	
30	3573669	1	Plate, Clamp	
31	1001112880	1	Plate, Tray Clamp	
32	3573728	1	Plate, Tray Clamp	
33	3841143	1	Keeper, Pin	
34	3900272	4	Screw 5/16 x 1-3/4	
35	4240018	2	Strap, Tie (Not Shown)	
36	4240099	AR	Strap, Tie	
37	4711400	4	Washer 1/4	
38	4711500	44	Washer 5/16	
39	4711600	7	Washer 3/8	
40	4752000	1	Washer 5/8	

SECTION 3 - ENGINE

ITEM	PART NUMBER	QTY	DESCRIPTION	REV
41	1001107975	1	Engine Assembly with Pumps (See Separate Breakdown in this Section)	
42	1001111132	1	Panel, Rubber	
43	1702942	1	Decal - Block Heater (Not Shown)	
44	0641606	4	Bolt 3/8 x 3/4	

FIGURE 3-10. DEUTZ TD2011 ENGINE INSTALLATION - WITH SAUER PUMPS AND STEEL HOODS (WITH SKYPOWER AND WITHOUT COLD WEATHER PLUS PACKAGE)

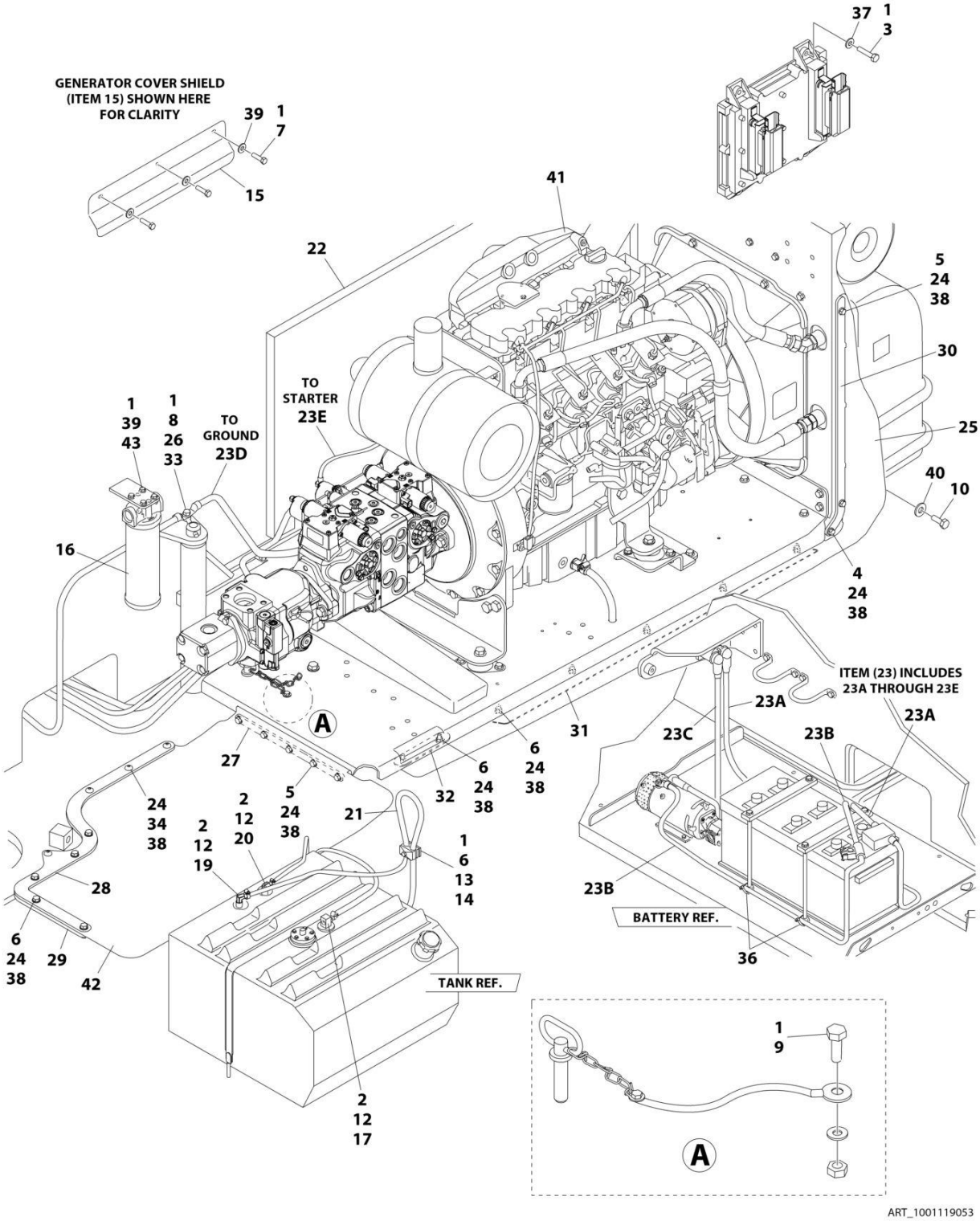

FIGURE 3-10. DEUTZ TD2011 ENGINE INSTALLATION - WITH SAUER PUMPS AND STEEL HOODS (WITH SKYPOWER AND WITHOUT COLD WEATHER PLUS PACKAGE)

ITEM	PART NUMBER	QTY	DESCRIPTION	REV
	1001119053	Ref	DEUTZ TD2011 DIESEL ENGINE INSTALLATION - WITH SAUER PUMPS AND STEEL HOODS (WITH SKYPOWER AND WITHOUT COLD WEATHER PLUS PACKAGE)	D
1	0100011	AR	Compound, Locking	
2	0100079	AR	Sealant, Pipe	
3	0641410	4	Bolt 1/4 x 1-1/4	
4	0641506	1	Bolt 5/16 x 3/4	
5	0641509	7	Bolt 5/16 x 1-1/8	
6	0641511	13	Bolt 5/16 x 1-3/8	
7	0641605	3	Bolt 3/8 x 5/8	
8	0641610	1	Bolt 3/8 x 1-1/4	
9	0641808	1	Bolt 1/2 x 1	
10	0642010	1	Bolt 5/8 x 1-1/4	
12	1320022	3	Clamp	
13	1320187	1	Clamp, Twin	
14	1320190	1	Cover, Clamp	
15	1671121	1	Cover, Generator	
16	1001108617	1	Pressure Filter	
16	70002231	1	Element, Filter	
17	2180348	1	Fitting, Barbed	
19	2220313	1	Fitting, Elbow Barbed	
20	2221176	1	Fitting, Elbow	
21	2750532	5 ft/ 1.5m	Hose	
22	2820170	1	Insulation, Sound Absorbing	
23	2902099	1	Battery Cable Kit	
23A	7024580	1	Cable, Red (To Aux Pump Relay, Battery Positive Terminal and Start Relay)	
23B	7024581	1	Cable, Black (To Aux Pump, Battery Negative Terminal and Ground at Tray Pivot)	
23C	7024582	1	Cable, Red (Aux Pump Relay to Aux Pump)	
23D	7024583	1	Cable, Black (Tray Pivot to Engine Mount)	
23E	7024584	1	Cable, Red (Start Relay to Starter)	
24	3311505	24	Nut 5/16	
25	3380473	1	Panel, Rubber	
26	3422446	1	Pin	
27	3573644	1	Plate, Tray Clamp	
28	1001112878	1	Plate, Top Clamp	
29	1001112879	1	Plate, Bottom Clamp	
30	3573669	1	Plate, Clamp	
31	1001112880	1	Plate, Tray Clamp	
32	3573728	1	Plate, Tray Clamp	
33	3841143	1	Keeper, Pin	
34	3900272	4	Screw 5/16 x 1-3/4	
35	4240018	2	Strap, Tie (Not Shown)	
36	4240099	AR	Strap, Tie	
37	4711400	4	Washer 1/4	
38	4711500	44	Washer 5/16	
39	4711600	7	Washer 3/8	
40	4752000	1	Washer 5/8	

SECTION 3 - ENGINE

ITEM	PART NUMBER	QTY	DESCRIPTION	REV
41	1001107973	1	Engine Assembly with Pumps (See Separate Breakdown in this Section)	
42	1001111132	1	Panel, Rubber	
43	0641606	4	Bolt 3/8 x 3/4	

FIGURE 3-11. DEUTZ TD2011 ENGINE ASSEMBLY - WITH REXROTH PUMPS (WITHOUT SKYPOWER AND WITHOUT COLD WEATHER PLUS PACKAGE)

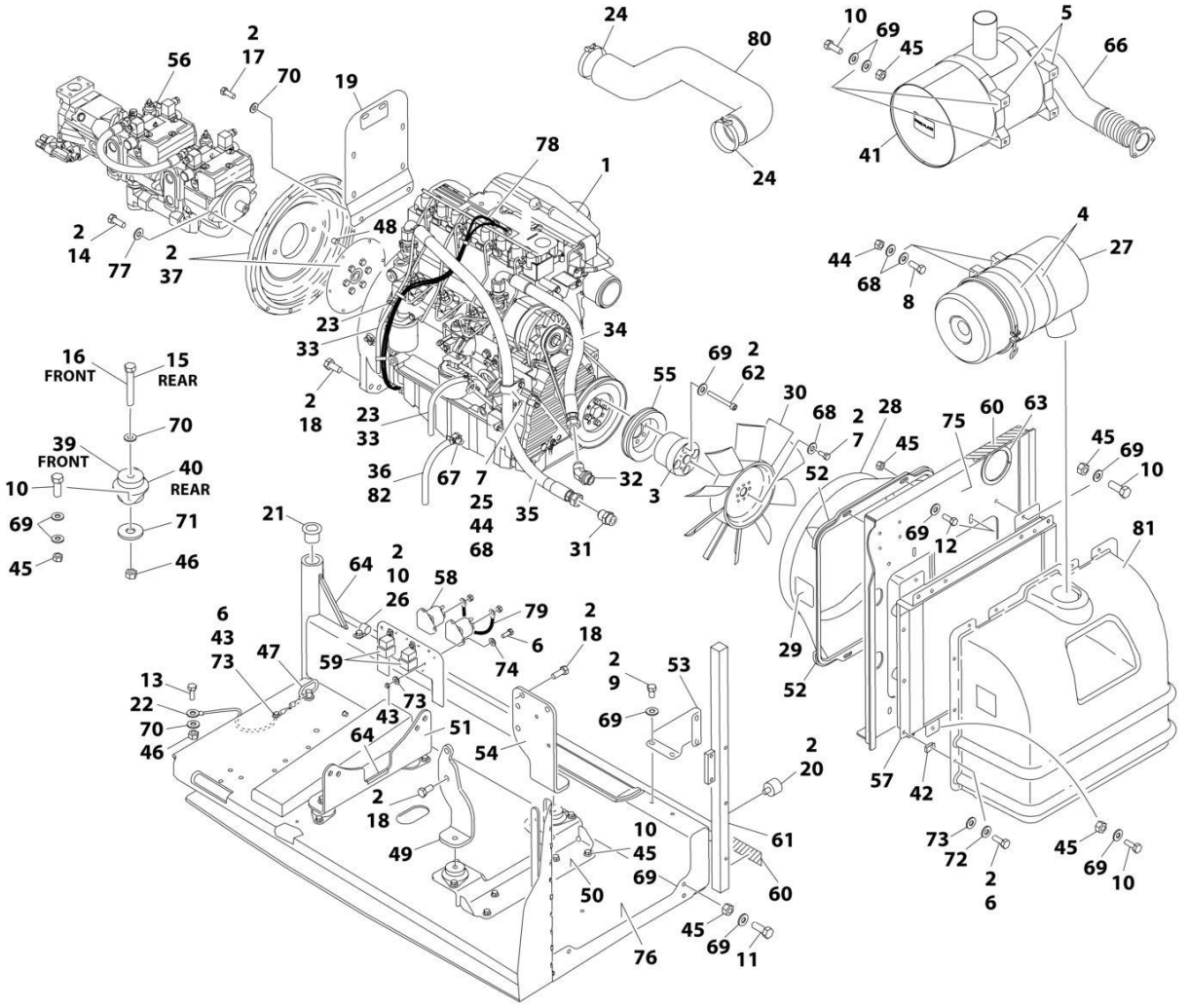

FIGURE 3-11. DEUTZ TD2011 ENGINE ASSEMBLY - WITH REXROTH PUMPS (WITHOUT SKYPOWER AND WITHOUT COLD WEATHER PLUS PACKAGE)

ITEM	PART NUMBER	QTY	DESCRIPTION	REV
	1001098513	Ref	DEUTZ TD2011 ENGINE ASSEMBLY - WITH REXROTH PUMPS	M
1	1001098601	1	Engine, Deutz TD2011 Components (See Separate Breakdown in this Section)	
2	0100011	AR	Compound, Locking	
3	0080237	1	Spacer, Fan	
4	0340003	2	Band, Air Cleaner	
5	0340051	2	Band, Muffler	
6	0641406	15	Bolt 1/4 x 3/4	
7	0641506	5	Bolt 5/16 x 3/4	
8	0641507	4	Bolt 5/16 x 7/8	
9	0641605	4	Bolt 3/8 x 5/8	
10	0641608	25	Bolt 3/8 x 1	
11	0641609	2	Bolt 3/8 x 1-1/8	
12	0641610	4	Bolt 3/8 x 1-1/4	
13	0641808	1	Bolt 1/2 x 1	
14	0641812	2	Bolt 1/2 x 1-1/2	
15	0641818	2	Bolt 1/2 x 2-1/4	
16	0641826	2	Bolt 1/2 x 3-1/4	
17	0711214	2	Bolt M12 x 30	
18	0771414	10	Bolt M14 x 30	
19	1001112766	1	Bracket, Muffler	
20	0940070	1	Bumper	
21	0961986	2	Bushing, Flanged	
22	1001131542	1	Lanyard	
23	1320022	3	Clamp	
24	1320058	2	Clamp	
25	1320060	1	Clamp	
26	1320223	1	J-Clip	
27	1340065	1	Air Cleaner Assembly	
27	7003655	1	Element, Air Cleaner	
27	7015013	1	Baffle, Rubber	
27	7015014	1	Clamp, Cap	
27	7015015	1	Cup	
27	7015003	1	Wingnut	
28	1671023	1	Shroud, Fan	
29	1703162	2	Decal - Fan Blade	
30	2060025	1	Fan	
31	2220451	1	Fitting, Straight	
32	2220498	1	Fitting, Elbow	
33	2720058	34 ft/ 10.3m	Hose	
34	2720500	1	Hose, Oil Cooler (Top)	
35	2720501	1	Hose, Oil Cooler (Bottom)	
36	2750532	0.75 ft /0.2m	Hose	
37	2902065	1	Pump Coupling Kit (See Separate Breakdown in this Section)	
39	3200362	2	Mount, Motor (Front)	
40	3200401	2	Mount, Motor (Rear)	
41	1001257277	1	Muffler, Spark Arresting	

SECTION 3 - ENGINE

ITEM	PART NUMBER	QTY	DESCRIPTION	REV
42	3300454	10	Nut 1/4	
43	3311405	5	Nut 1/4	
44	3311505	5	Nut 5/16	
45	3311605	30	Nut 3/8	
46	3311805	5	Nut 1/2	
47	3422532	1	Pin, Hitch	
48	3520054	2	Plug	
49	3537416	1	Plate, Mounting (Front Right)	
50	3539971	1	Bracket, Engine Mounting (Front)	
51	3573142	1	Bracket, Engine Mounting (Rear)	
52	3573411	2	Plate, Clamp	
53	3573412	1	Gusset	
54	3573529	1	Plate, Mounting (Front Left)	
55	3580158	1	Pulley	
56	3600339	1	Pump Assembly - Rexroth (See Separate Breakdown in this Section)	
57	1001145382	1	Cooler, Engine Oil	
58	3740067	2	Relay, Start	
59	3740080	2	Relay	
60	3960543	1	Seal	
61	3960544	1	Seal	
62	4032022	4	Capscrew M10 x 90	
63	4060804	0.98 ft /0.3m	Flex-Trim	
64	4060805	0.67 ft /0.2m	Flex-Trim	
65	4240099	AR	Tie, Wire (Not Shown)	
66	4568293	1	Pipe, Exhaust	
67	4640751	1	Valve, Oil Drain	
68	4711500	13	Washer 5/16	
69	4711600	68	Washer 3/8	
70	4711800	7	Washer 1/2	
71	4740274	4	Washer, Snubbing	
72	4740518	10	Washer, Nylon	
73	4751400	20	Washer 1/4	
74	4791400	4	Washer 1/4	
75	4846552	1	Plate, Oil Cooler Mounting	
76	4846946	1	Tray	
77	4891800	2	Washer 1/2 Hardened	
78	4923468	1	Harness, Glow Plugs	
79	4923592	1	Cable, Jumper	
80	1001225118	1	Hose, Air Intake	
81	0272060	1	Box, Air Intake	
82	8410013	1	Clamp, Gear	

FIGURE 3-12. DEUTZ TD2011 ENGINE ASSEMBLY - WITH REXROTH PUMPS (WITH SKYPOWER AND WITHOUT COLD WEATHER PLUS PACKAGE)

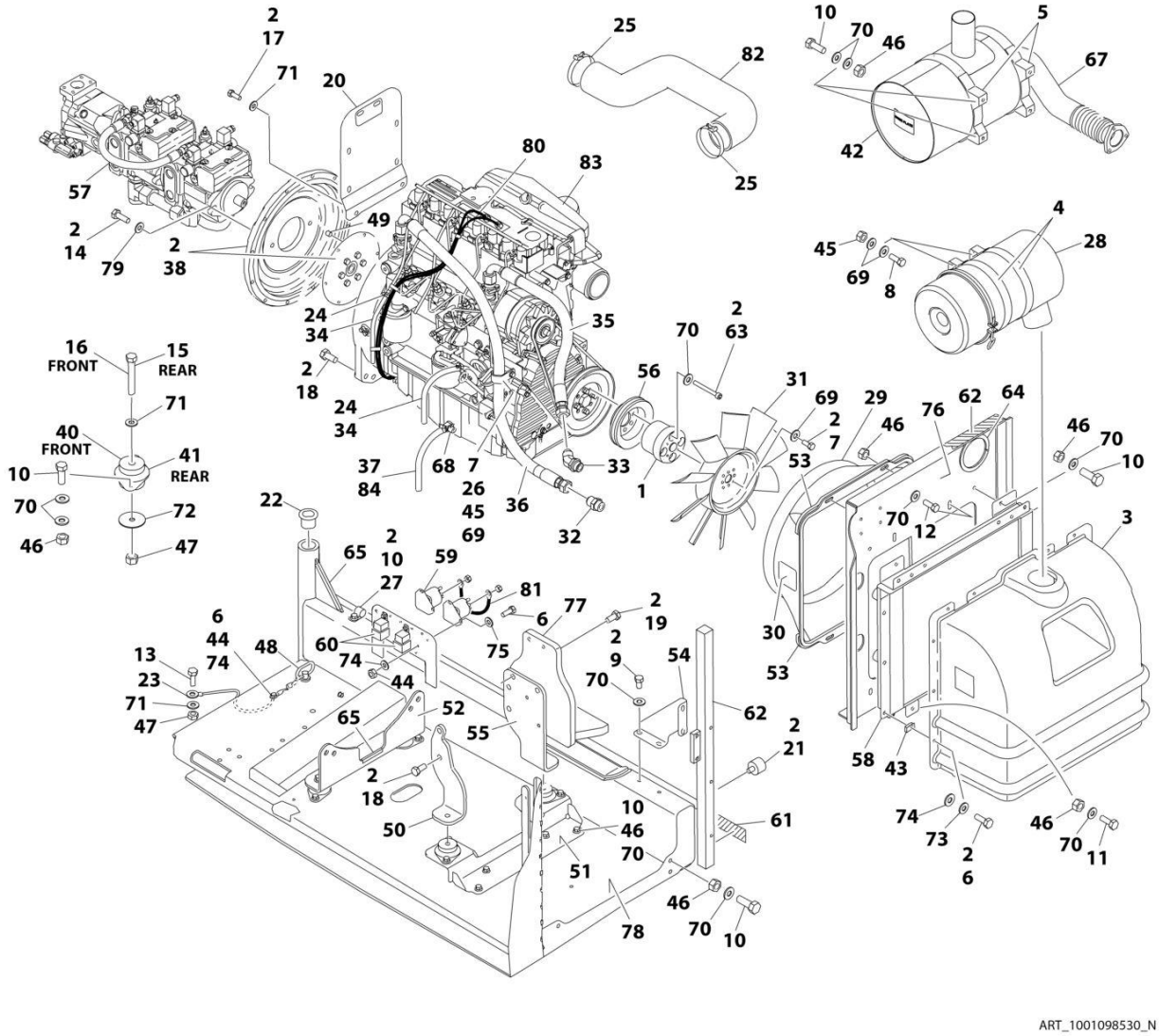

FIGURE 3-12. DEUTZ TD2011 ENGINE ASSEMBLY - WITH REXROTH PUMPS (WITH SKYPOWER AND WITHOUT COLD WEATHER PLUS PACKAGE)

ITEM	PART NUMBER	QTY	DESCRIPTION	REV
	1001098530	Ref	DEUTZ TD2011 ENGINE ASSEMBLY - WITH REXROTH PUMPS (WITH SKYPOWER AND WITHOUT COLD WEATHER PLUS PACKAGE)	N
1	0080244	1	Spacer, Fan	
2	0100011	AR	Compound, Locking	
3	0272060	1	Box, Air Intake	
4	0340003	2	Band, Air Cleaner	
5	0340051	2	Band, Muffler	
6	0641406	15	Bolt 1/4 x 3/4	
7	0641506	5	Bolt 5/16 x 3/4	
8	0641507	4	Bolt 5/16 x 7/8	
9	0641605	4	Bolt 3/8 x 5/8	
10	0641608	25	Bolt 3/8 x 1	
11	0641609	2	Bolt 3/8 x 1-1/8	
12	0641610	4	Bolt 3/8 x 1-1/4	
13	0641808	1	Bolt 1/2 x 1	
14	0641812	2	Bolt 1/2 x 1-1/2	
15	0641818	2	Bolt 1/2 x 2-1/4	
16	0641826	2	Bolt 1/2 x 3-1/4	
17	0711214	2	Bolt M12 x 30	
18	0771414	6	Bolt M14 x 30	
19	0711417	4	Bolt M14 x 45	
20	1001112766	1	Bracket, Muffler	
21	0940070	1	Bumper	
22	0961986	2	Bushing, Flanged	
23	1001131542	1	Lanyard	
24	1320022	2	Clamp	
25	1320058	2	Clamp	
26	1320060	1	Clamp	
27	1320223	1	J-Clip	
28	1340065	1	Air Cleaner Assembly	
28	7003655	1	Element, Air Cleaner	
28	7015013	1	Baffle, Rubber	
28	7015014	1	Clamp, Cap	
28	7015015	1	Cup	
28	7015003	1	Wingnut	
29	1671023	1	Shroud, Fan	
30	1703162	2	Decal - Fan Blade	
31	2060025	1	Fan	
32	2220451	1	Fitting, Straight	
33	2220498	1	Fitting, Elbow	
34	2720058	34 ft/ 10.3m	Hose	
35	2720500	1	Hose, Oil Cooler (Top)	
36	2720501	1	Hose, Oil Cooler (Bottom)	
37	2750532	0.75 ft /0.2m	Hose	
38	2902065	1	Pump Coupling Kit (See Separate Breakdown in this Section)	
40	3200362	2	Mount, Motor (Front)	
41	3200401	2	Mount, Motor (Rear)	

ITEM	PART NUMBER	QTY	DESCRIPTION	REV
42	1001257277	1	Muffler	
43	3300454	10	Nut	
44	3311405	5	Nut 1/4	
45	3311505	5	Nut 5/16	
46	3311605	30	Nut 3/8	
47	3311805	5	Nut 1/2	
48	3422532	1	Pin, Hitch	
49	3520054	2	Plug	
50	3537416	1	Plate, Mounting (Front Right)	
51	3539971	1	Bracket, Engine Mounting (Front)	
52	3573142	1	Bracket, Engine Mounting (Rear)	
53	3573411	2	Plate, Clamp	
54	3573412	1	Gusset	
55	3573529	1	Plate, Mounting (Front Left)	
56	3580320	1	Pulley	
57	3600339	1	Pump Assembly - Rexroth (See Separate Breakdown in this Section)	
58	1001145382	1	Cooler, Engine Oil	
59	3740067	2	Relay, Start	
60	3740080	2	Relay	
61	3960543	1	Seal	
62	3960544	1	Seal	
63	4032022	4	Capscrew M10 x 90	
64	4060804	0.98 ft /0.3m	Flex-Trim	
65	4060805	0.67 ft /0.2m	Flex-Trim	
66	4240099	AR	Tie, Wire (Not Shown)	
67	4568293	1	Pipe, Exhaust	
68	4640751	1	Valve, Oil Drain	
69	4711500	13	Washer 5/16	
70	4711600	68	Washer 3/8	
71	4711800	7	Washer 1/2	
72	4740274	4	Washer, Snubbing	
73	4740518	10	Washer, Nylon	
74	4751400	20	Washer 1/4	
75	4791400	4	Washer 1/4	
76	4846552	1	Plate, Oil Cooler Mounting	
77	4846945	1	Mount, Generator	
78	4846946	1	Tray	
79	4891800	2	Washer 1/2	
80	4923468	1	Harness, Glow Plugs	
81	4923592	1	Cable, Jumper	
82	1001225118	1	Hose, Air Intake	
83	1001098601	1	Engine, Deutz TD2011 Components (See Separate Breakdown in this Section)	
84	8410013	1	Clamp, Gear	

FIGURE 3-13. DEUTZ TD2011 ENGINE ASSEMBLY - WITH REXROTH PUMPS (WTH SKYPOWER AND WITH COLD WEATHER PLUS PACKAGE)

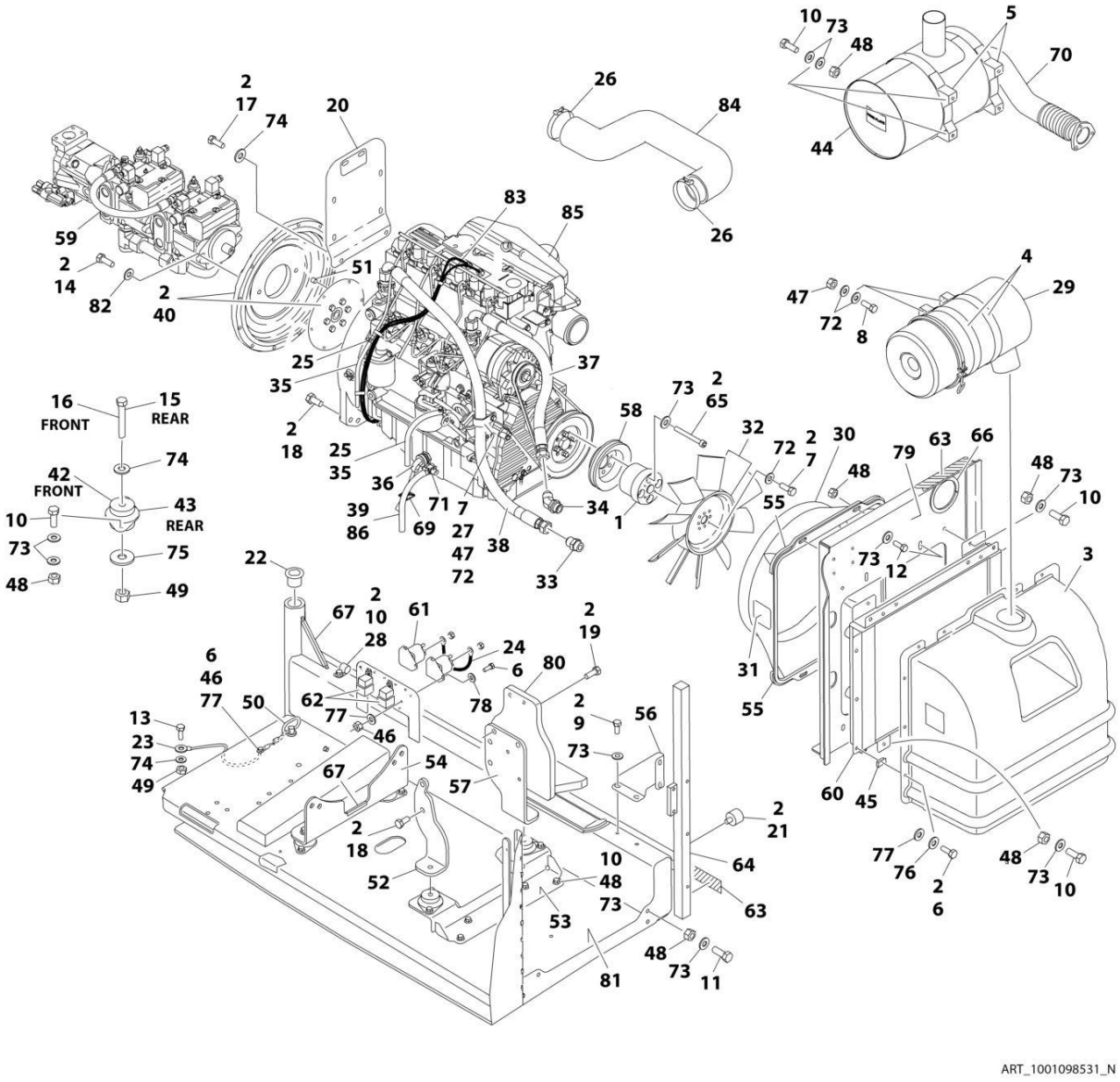

FIGURE 3-13. DEUTZ TD2011 ENGINE ASSEMBLY - WITH REXROTH PUMPS (WTH SKYPOWER AND WITH COLD WEATHER PLUS PACKAGE)

ITEM	PART NUMBER	QTY	DESCRIPTION	REV
	1001098531	Ref	DEUTZ TD2011 ENGINE ASSEMBLY - WITH REXROTH PUMPS (WITH SKYPOWER AND WITH COLD WEATHER PLUS PACKAGE)	N
1	0080244	1	Spacer, Fan	
2	0100011	AR	Compound, Locking	
3	0272060	1	Box, Air Intake	
4	0340003	2	Band, Air Cleaner	
5	0340051	2	Band, Muffler	
6	0641406	15	Bolt 1/4 x 3/4	
7	0641506	5	Bolt 5/16 x 3/4	
8	0641507	4	Bolt 5/16 x 7/8	
9	0641605	4	Bolt 3/8 x 5/8	
10	0641608	25	Bolt 3/8 x 1	
11	0641609	2	Bolt 3/8 x 1-1/8	
12	0641610	4	Bolt 3/8 x 1-1/4	
13	0641808	1	Bolt 1/2 x 1	
14	0641812	2	Bolt 1/2 x 1-1/2	
15	0641818	2	Bolt 1/2 x 2-1/4	
16	0641826	2	Bolt 1/2 x 3-1/4	
17	0711214	2	Bolt M12 x 30	
18	0771414	6	Bolt M14 x 30	
19	0711417	4	Bolt M14 x 45	
20	1001112766	1	Bracket, Muffler	
21	0940070	1	Bumper	
22	0961986	2	Bushing, Flanged	
23	1001131542	1	Lanyard	
24	1060904	1	Cable, Jumper	
25	1320022	2	Clamp	
26	1320058	2	Clamp	
27	1320060	1	Clamp	
28	1320223	1	J-Clip	
29	1340065	1	Air Cleaner Assembly	
29	7003655	1	Element, Air Cleaner	
29	7015013	1	Baffle, Rubber	
29	7015014	1	Clamp, Cap	
29	7015015	1	Cup	
29	7015003	1	Wingnut	
30	1671023	1	Shroud, Fan	
31	1703162	2	Decal - Fan Blade	
32	2060025	1	Fan	
33	2220451	1	Fitting, Straight	
34	2220498	1	Fitting, Elbow	
35	2720058	34 ft/ 10.3m	Hose	
36	2580062	1	Heater, Engine Block	
37	2720500	1	Hose, Oil Cooler (Top)	
38	2720501	1	Hose, Oil Cooler (Bottom)	
39	2750532	0.75 ft /0.2m	Hose	
40	2902065	1	Pump Coupling Kit (See Separate Breakdown in this Section)	

SECTION 3 - ENGINE

ITEM	PART NUMBER	QTY	DESCRIPTION	REV
42	3200362	2	Mount, Motor (Front)	
43	3200401	2	Mount, Motor (Rear)	
44	1001257277	1	Muffler	
45	3300454	10	Nut 1/4	
46	3311405	5	Nut 1/4	
47	3311505	5	Nut 5/16	
48	3311605	30	Nut 3/8	
49	3311805	5	Nut 1/2	
50	3422532	1	Pin, Hitch	
51	3520054	2	Plug	
52	3537416	1	Plate, Mounting (Front Right)	
53	3539971	1	Bracket, Engine Mounting (Front)	
54	3573142	1	Bracket, Engine Mounting (Rear)	
55	3573411	2	Plate, Clamp	
56	3573412	1	Gusset	
57	3573529	1	Plate, Mounting (Front Left)	
58	3580320	1	Pulley	
59	3600339	1	Pump Assembly - Rexroth (See Separate Breakdown in this Section)	
60	1001145382	1	Cooler, Engine Oil	
61	3740067	2	Relay, Start	
62	3740080	2	Relay	
63	3960543	1	Seal	
64	3960544	1	Seal	
65	4032022	4	Capscrew M10 x 90	
66	4060804	0.98 ft /0.3m	Flex-Trim	
67	4060805	0.67 ft /0.2m	Flex-Trim	
68	4240099	AR	Tie, Wire (Not Shown)	
69	4460234	3	Mount, Wire Tie	
70	4568293	1	Pipe, Exhaust	
71	4640751	1	Valve, Oil Drain	
72	4711500	13	Washer 5/16	
73	4711600	68	Washer 3/8	
74	4711800	7	Washer 1/2	
75	4740274	4	Washer, Snubbing	
76	4740518	10	Washer, Nylon	
77	4751400	20	Washer 1/4	
78	4791400	4	Washer 1/4	
79	4846552	1	Plate, Oil Cooler Mounting	
80	4846945	1	Mount, Generator	
81	4846946	1	Tray	
82	4891800	2	Washer 1/2 Hardened	
83	4923468	1	Harness, Glow Plugs	
84	1001225118	1	Hose, Air Intake	
85	1001098601	1	Engine, Deutz TD2011 Components (See Separate Breakdown in this Section)	
86	8410013	1	Clamp, Gear	

FIGURE 3-14. DEUTZ TD2011 ENGINE ASSEMBLY - WITH SAUER PUMPS (WITHOUT SKYPOWER AND WITHOUT COLD WEATHER PLUS PACKAGE)

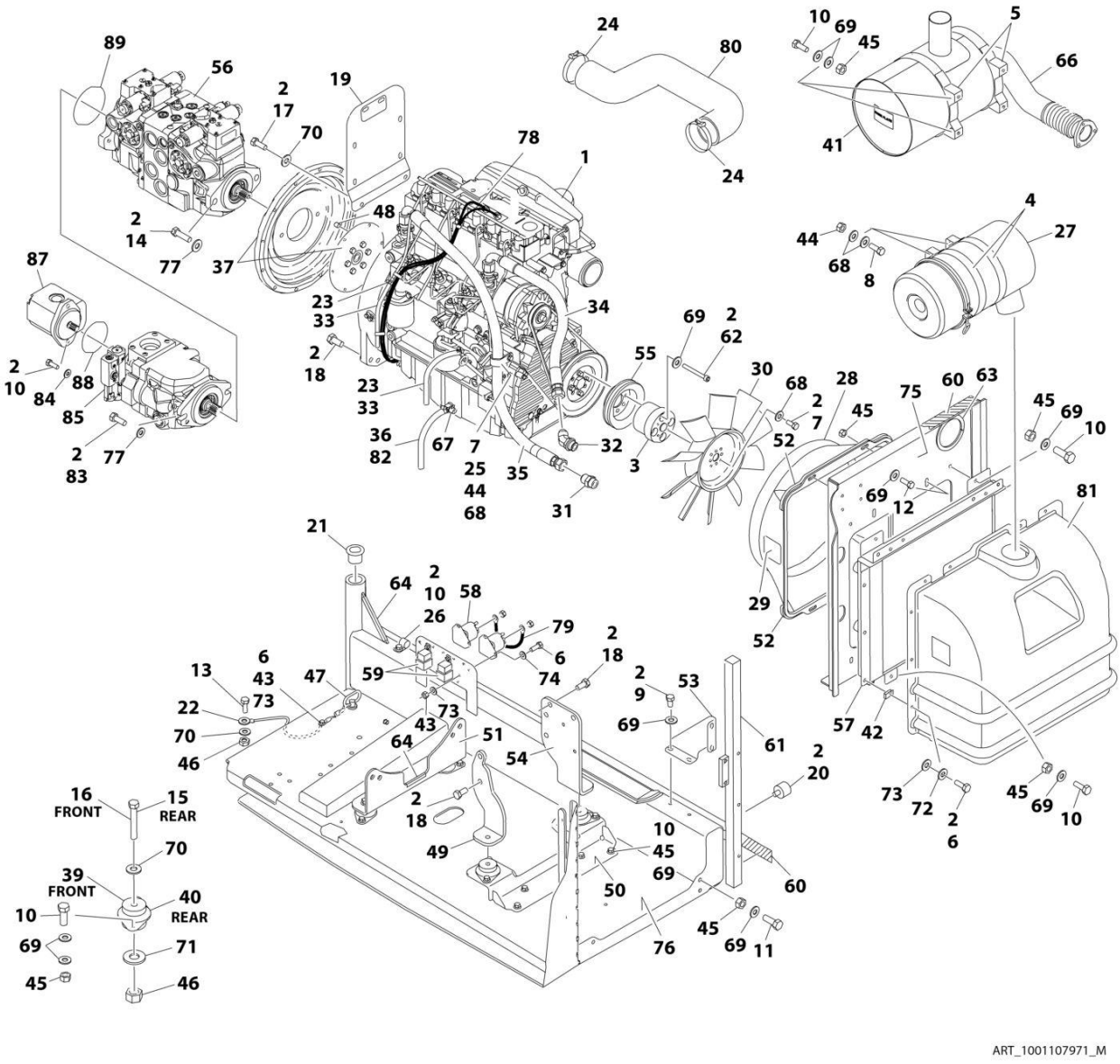

FIGURE 3-14. DEUTZ TD2011 ENGINE ASSEMBLY - WITH SAUER PUMPS (WITHOUT SKYPOWER AND WITHOUT COLD WEATHER PLUS PACKAGE)

ITEM	PART NUMBER	QTY	DESCRIPTION	REV
	1001107971	Ref	DEUTZ TD2011 ENGINE ASSEMBLY - WITH SAUER PUMPS (WITHOUT SKYPOWER AND WITHOUT COLD WEATHER PLUS PACKAGE)	M
1	1001098601	1	Engine, Deutz TD2011 Components (See Separate Breakdown in this Section)	
2	0100011	AR	Compound, Locking	
3	0080237	1	Spacer, Fan	
4	0340003	2	Band, Air Cleaner	
5	0340051	2	Band, Muffler	
6	0641406	15	Bolt 1/4 x 3/4	
7	0641506	5	Bolt 5/16 x 3/4	
8	0641507	4	Bolt 5/16 x 7/8	
9	0641605	4	Bolt 3/8 x 5/8	
10	0641608	27	Bolt 3/8 x 1	
11	0641609	2	Bolt 3/8 x 1-1/8	
12	0641610	4	Bolt 3/8 x 1-1/4	
13	0641808	1	Bolt 1/2 x 1	
14	0641814	2	Bolt 1/2 x 1-3/4	
15	0641818	2	Bolt 1/2 x 2-1/4	
16	0641826	2	Bolt 1/2 x 3-1/4	
17	0711214	2	Bolt M12 x 30	
18	0771414	10	Bolt M14 x 30	
19	1001112766	1	Bracket, Muffler	
20	0940070	1	Bumper	
21	0961986	2	Bushing, Flanged	
22	1001131542	1	Lanyard	
23	1320022	3	Clamp	
24	1320058	2	Clamp	
25	1320060	1	Clamp	
26	1320223	1	J-Clip	
27	1340065	1	Air Cleaner Assembly	
27	7003655	1	Element, Air Cleaner	
27	7015013	1	Baffle, Rubber	
27	7015014	1	Clamp, Cap	
27	7015015	1	Cup	
27	7015003	1	Wingnut	
28	1671023	1	Shroud, Fan	
29	1703162	2	Decal - Fan Blade	
30	2060025	1	Fan	
31	2220451	1	Fitting, Straight	
32	2220498	1	Fitting, Elbow	
33	2720058	34 ft /10.3m	Hose	
34	2720500	1	Hose, Oil Cooler (Top)	
35	2720501	1	Hose, Oil Cooler (Bottom)	
36	2750532	0.75 ft /0.2m	Hose	
37	2902065	1	Pump Coupling Kit (See Separate Breakdown in this Section)	
39	3200362	2	Mount, Motor (Front)	
40	3200401	2	Mount, Motor (Rear)	

SECTION 3 - ENGINE

ITEM	PART NUMBER	QTY	DESCRIPTION	REV
41	1001257277	1	Muffler	
42	3300454	10	Nut 1/4	
43	3311405	5	Nut 1/4	
44	3311505	5	Nut 5/16	
45	3311605	30	Nut 3/8	
46	3311805	5	Nut 1/2	
47	3422532	1	Pin, Hitch	
48	3520054	2	Plug	
49	3537416	1	Plate, Mounting (Front Right)	
50	3539971	1	Bracket, Engine Mounting (Front)	
51	3573142	1	Bracket, Engine Mounting (Rear)	
52	3573411	2	Plate, Clamp	
53	3573412	1	Gusset	
54	3573529	1	Plate, Mounting (Front Left)	
55	3580158	1	Pulley	
56	1001108616	1	Pump Assembly - Sauer (See Separate Breakdown in this Section)	
57	1001145382	1	Cooler, Engine Oil	
58	3740067	2	Relay, Start	
59	3740080	2	Relay	
60	3960543	1	Seal	
61	3960544	1	Seal	
62	4032022	4	Capscrew M10 x 90	
63	4060804	0.98 ft /0.3m	Flex-Trim	
64	4060805	0.67 ft /0.2m	Flex-Trim	
65	4240099	AR	Tie, Wire (Not Shown)	
66	4568293	1	Pipe, Exhaust	
67	4640751	1	Valve, Oil Drain	
68	4711500	13	Washer 5/16	
69	4711600	68	Washer 3/8	
70	4711800	7	Washer 1/2	
71	4740274	4	Washer, Snubbing	
72	4740518	10	Washer, Nylon	
73	4751400	20	Washer 1/4	
74	4791400	4	Washer 1/4	
75	4846552	1	Plate, Oil Cooler Mounting	
76	4846946	1	Tray	
77	4891800	4	Washer 1/2	
78	4923468	1	Harness, Glow Plugs	
79	4923592	1	Cable, Jumper	
80	1001225118	1	Hose, Air Intake	
81	0272060	1	Box, Air Intake	
82	8410013	1	Clamp, Gear	
83	0761215	2	Bolt M12 x 35mm	
84	4891600	2	Washer 3/8	
85	1001171095	1	Pump Assembly - Sauer Piston (See Separate Breakdown in this Section)	
87	1001112927	1	Pump Assembly - Sauer Gear (See Separate Breakdown in this Section)	
88	3790152	1	O-Ring	
89	3790155	1	O-Ring	

FIGURE 3-15. DEUTZ TD2011 ENGINE ASSEMBLY - WITH SAUER PUMPS (WITH SKYPOWER AND WITHOUT COLD WEATHER PLUS PACKAGE)

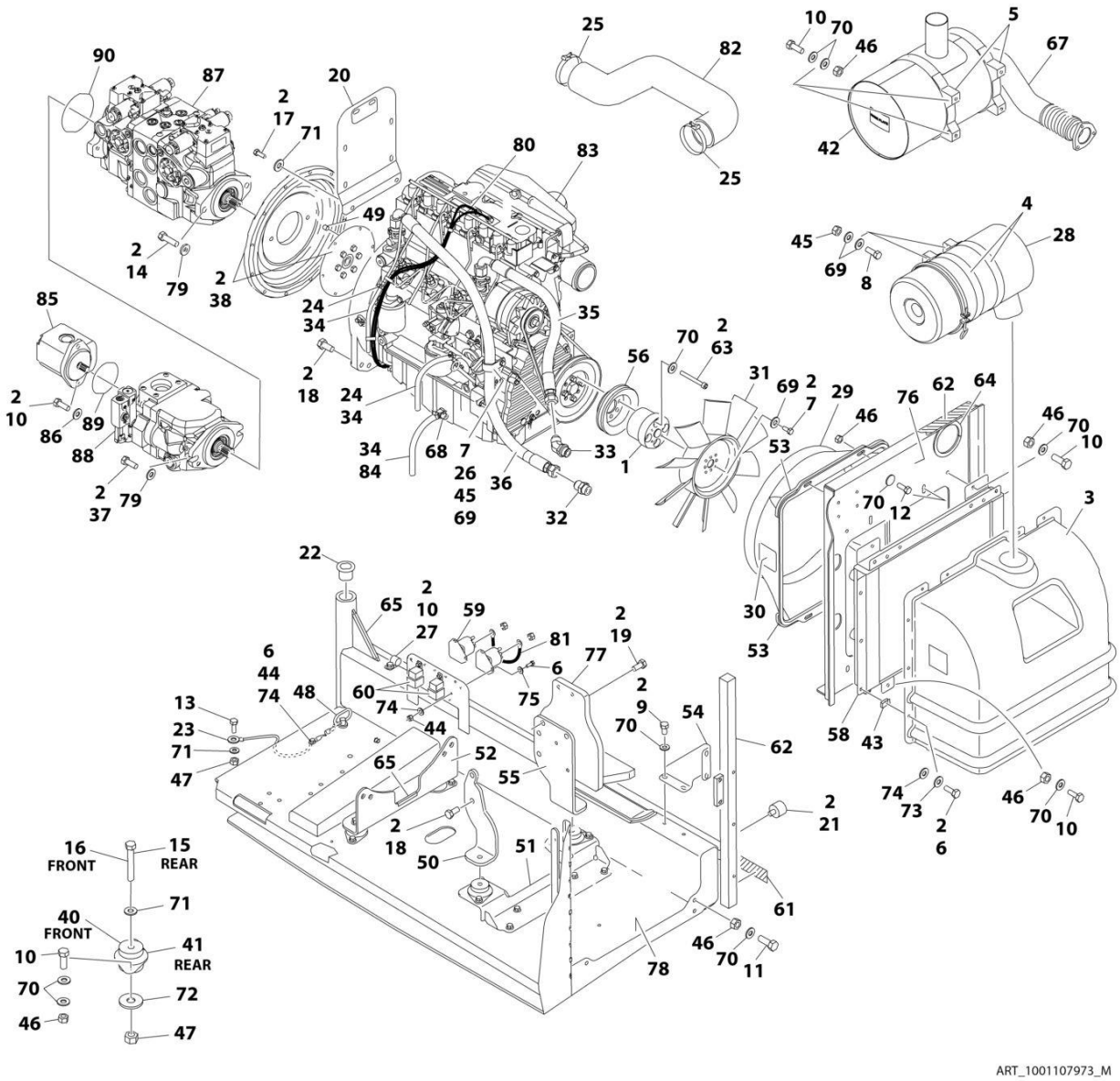

FIGURE 3-15. DEUTZ TD2011 ENGINE ASSEMBLY - WITH SAUER PUMPS (WITH SKYPOWER AND WITHOUT COLD WEATHER PLUS PACKAGE)

ITEM	PART NUMBER	QTY	DESCRIPTION	REV
	1001107973	Ref	DEUTZ TD2011 ENGINE ASSEMBLY - WITH SAUER PUMPS (WITH SKYPOWER AND WITHOUT COLD WEATHER PLUS PACKAGE)	N
1	0080244	1	Spacer, Fan	
2	0100011	AR	Compound, Locking	
3	0272060	1	Box, Air Intake	
4	0340003	2	Band, Air Cleaner	
5	0340051	2	Band, Muffler	
6	0641406	15	Bolt 1/4 x 3/4	
7	0641506	5	Bolt 5/16 x 3/4	
8	0641507	4	Bolt 5/16 x 7/8	
9	0641605	4	Bolt 3/8 x 5/8	
10	0641608	27	Bolt 3/8 x 1	
11	0641609	2	Bolt 3/8 x 1-1/8	
12	0641610	4	Bolt 3/8 x 1-1/4	
13	0641808	1	Bolt 1/2 x 1	
14	0641814	2	Bolt 1/2 x 1-3/4	
15	0641818	2	Bolt 1/2 x 2-1/4	
16	0641826	2	Bolt 1/2 x 3-1/4	
17	0711214	2	Bolt M12 x 30	
18	0771414	6	Bolt M14 x 30	
19	0711417	4	Bolt M14 x 45	
20	1001112766	1	Bracket, Muffler	
21	0940070	1	Bumper	
22	0961986	2	Bushing, Flanged	
23	1001131542	1	Lanyard	
24	1320022	2	Clamp	
25	1320058	2	Clamp	
26	1320060	1	Clamp	
27	1320223	1	J-Clip	
28	1340065	1	Air Cleaner Assembly	
28	7003655	1	Element, Air Cleaner	
28	7015013	1	Baffle, Rubber	
28	7015014	1	Clamp, Cap	
28	7015015	1	Cup	
28	7015003	1	Wingnut	
29	1671023	1	Shroud, Fan	
30	1703162	2	Decal - Fan Blade	
31	2060025	1	Fan	
32	2220451	1	Fitting, Straight	
33	2220498	1	Fitting, Elbow	
34	2720058	34 ft/ 10.3m	Hose	
35	2720500	1	Hose, Oil Cooler (Top)	
36	2720501	1	Hose, Oil Cooler (Bottom)	
37	0761215	2	Bolt M12 x 35mm	
38	2902065	1	Pump Coupling Kit (See Separate Breakdown in this Section)	
40	3200362	2	Mount, Motor (Front)	
41	3200401	2	Mount, Motor (Rear)	

SECTION 3 - ENGINE

ITEM	PART NUMBER	QTY	DESCRIPTION	REV
42	1001257277	1	Muffler	
43	3300454	10	Nut	
44	3311405	5	Nut 1/4	
45	3311505	5	Nut 5/16	
46	3311605	30	Nut 3/8	
47	3311805	5	Nut 1/2	
48	3422532	1	Pin, Hitch	
49	3520054	2	Plug	
50	3537416	1	Plate, Mounting (Front Right)	
51	3539971	1	Bracket, Engine Mounting (Front)	
52	3573142	1	Bracket, Engine Mounting (Rear)	
53	3573411	2	Plate, Clamp	
54	3573412	1	Gusset	
55	3573529	1	Plate, Mounting (Front Left)	
56	3580320	1	Pulley	
58	1001145382	1	Cooler, Engine Oil	
59	3740067	2	Relay, Start	
60	3740080	2	Relay	
61	3960543	1	Seal	
62	3960544	1	Seal	
63	4032022	4	Capscrew M10 x 90	
64	4060804	0.98 ft /0.3m	Flex-Trim	
65	4060805	0.67 ft /0.2m	Flex-Trim	
66	4240099	AR	Tie, Wire (Not Shown)	
67	4568293	1	Pipe, Exhaust	
68	4640751	1	Valve, Oil Drain	
69	4711500	13	Washer 5/16	
70	4711600	68	Washer 3/8	
71	4711800	7	Washer 1/2	
72	4740274	4	Washer, Snubbing	
73	4740518	10	Washer, Nylon	
74	4751400	20	Washer 1/4	
75	4791400	4	Washer 1/4	
76	4846552	1	Plate, Oil Cooler Mounting	
77	4846945	1	Mount, Generator	
78	4846946	1	Tray	
79	4891800	4	Washer 1/2	
80	4923468	1	Harness, Glow Plugs	
81	4923592	1	Cable, Jumper	
82	1001225118	1	Hose, Air Intake	
83	1001098601	1	Engine, Deutz TD2011 Components (See Separate Breakdown in this Section)	
84	8410013	1	Clamp, Gear	
85	1001112927	1	Pump Assembly - Sauer Gear (See Separate Breakdown in this Section)	
86	4891600	2	Washer 3/8	
87	1001108616	1	Pump Assembly - Sauer (See Separate Breakdown in this Section)	
88	1001171095	1	Pump Assembly - Sauer Piston (See Separate Breakdown in this Section)	
89	3790152	1	O-Ring	

ITEM	PART NUMBER	QTY	DESCRIPTION	REV
90	3790155	1	O-Ring	
91	2750532	0.8 ft/ 0.2m	Hose	

FIGURE 3-16. DEUTZ TD2011 ENGINE ASSEMBLY - WITH SAUER PUMPS (WITH SKYPOWER AND WITH COLD WEATHER PLUS PACKAGE)

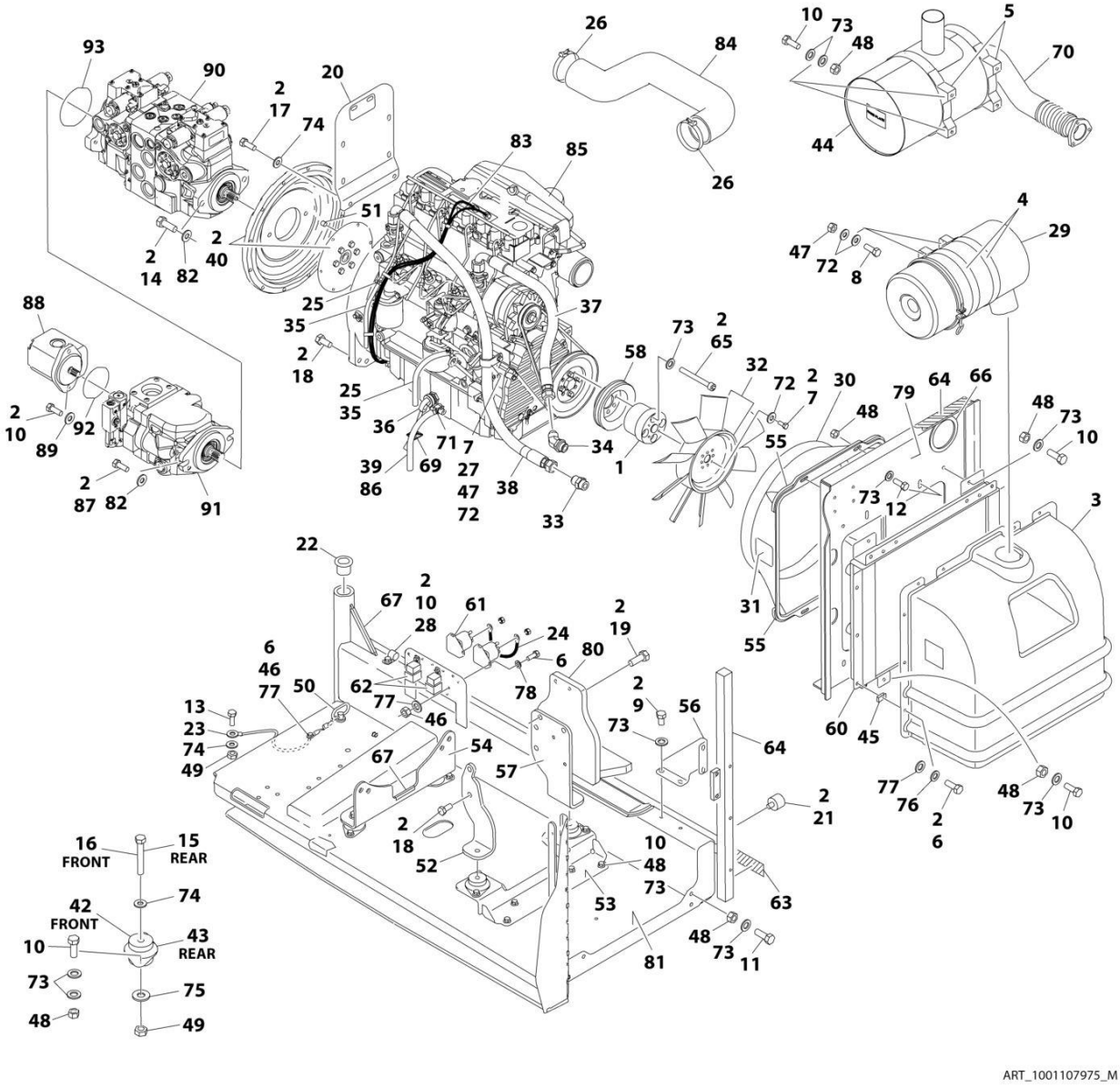

FIGURE 3-16. DEUTZ TD2011 ENGINE ASSEMBLY - WITH SAUER PUMPS (WITH SKYPOWER AND WITH COLD WEATHER PLUS PACKAGE)

ITEM	PART NUMBER	QTY	DESCRIPTION	REV
	1001107975	Ref	DEUTZ TD2011 ENGINE ASSEMBLY - WITH SAUER PUMPS (WITH SKYPOWER AND WITH COLD WEATHER PLUS PACKAGE)	M
1	0080244	1	Spacer, Fan	
2	0100011	AR	Compound, Locking	
3	0272060	1	Box, Air Intake	
4	0340003	2	Band, Air Cleaner	
5	0340051	2	Band, Muffler	
6	0641406	15	Bolt 1/4 x 3/4	
7	0641506	5	Bolt 5/16 x 3/4	
8	0641507	4	Bolt 5/16 x 7/8	
9	0641605	4	Bolt 3/8 x 5/8	
10	0641608	27	Bolt 3/8 x 1	
11	0641609	2	Bolt 3/8 x 1-1/8	
12	0641610	4	Bolt 3/8 x 1-1/4	
13	0641808	1	Bolt 1/2 x 1	
14	0641814	2	Bolt 1/2 x 1-3/4	
15	0641818	2	Bolt 1/2 x 2-1/4	
16	0641826	2	Bolt 1/2 x 3-1/4	
17	0711214	2	Bolt M12 x 30	
18	0771414	6	Bolt M14 x 30	
19	0711417	4	Bolt M14 x 45	
20	1001112766	1	Bracket, Muffler	
21	0940070	1	Bumper	
22	0961986	2	Bushing, Flanged	
23	1001131542	1	Lanyard	
24	1060904	1	Cable, Jumper	
25	1320022	2	Clamp	
26	1320058	2	Clamp	
27	1320060	1	Clamp	
28	1320223	1	J-Clip	
29	1340065	1	Air Cleaner Assembly	
29	7003655	1	Element, Air Cleaner	
29	7015013	1	Baffle, Rubber	
29	7015014	1	Clamp, Cap	
29	7015015	1	Cup	
29	7015003	1	Wingnut	
30	1671023	1	Shroud, Fan	
31	1703162	2	Decal - Fan Blade	
32	2060025	1	Fan	
33	2220451	1	Fitting, Straight	
34	2220498	1	Fitting, Elbow	
35	2720058	34 ft/ 10.3m	Hose	
36	2580062	1	Heater, Engine Block	
37	2720500	1	Hose, Oil Cooler (Top)	
38	2720501	1	Hose, Oil Cooler (Bottom)	
39	2750532	0.75 ft /0.2m	Hose	
40	2902065	1	Pump Coupling Kit (See Separate Breakdown in this Section))	

SECTION 3 - ENGINE

ITEM	PART NUMBER	QTY	DESCRIPTION	REV
42	3200362	2	Mount, Motor (Front)	
43	3200401	2	Mount, Motor (Rear)	
44	1001257277	1	Muffler	
45	3300454	10	Nut	
46	3311405	5	Nut 1/4	
47	3311505	5	Nut 5/16	
48	3311605	30	Nut 3/8	
49	3311805	5	Nut 1/2	
50	3422532	1	Pin, Hitch	
51	3520054	2	Plug	
52	3537416	1	Plate, Mounting (Front Right)	
53	3539971	1	Bracket, Engine Mounting (Front)	
54	3573142	1	Bracket, Engine Mounting (Rear)	
55	3573411	2	Plate, Clamp	
56	3573412	1	Gusset	
57	3573529	1	Plate, Mounting (Front Left)	
58	3580320	1	Pulley	
60	1001145382	1	Cooler, Engine Oil	
61	3740067	2	Relay, Start	
62	3740080	2	Relay	
63	3960543	1	Seal	
64	3960544	1	Seal	
65	4032022	4	Capscrew M10 x 90	
66	4060804	0.98 ft /0.3m	Flex-Trim	
67	4060805	0.67 ft /0.2m	Flex-Trim	
68	4240099	AR	Tie, Wire (Not Shown)	
69	4460234	3	Mount, Wire Tie	
70	4568293	1	Pipe, Exhaust	
71	4640751	1	Valve, Oil Drain	
72	4711500	13	Washer 5/16	
73	4711600	68	Washer 3/8	
74	4711800	7	Washer 1/2	
75	4740274	4	Washer, Snubbing	
76	4740518	10	Washer, Nylon	
77	4751400	20	Washer 1/4	
78	4791400	4	Washer 1/4	
79	4846552	1	Plate, Oil Cooler Mounting	
80	4846945	1	Mount, Generator	
81	4846946	1	Tray	
82	4891800	4	Washer 1/2	
83	4923468	1	Harness, Glow Plugs	
84	1001225118	1	Hose, Air Intake	
85	1001098601	1	Engine, Deutz TD2011 Components (See Separate Breakdown in this Section)	
86	8410013	1	Clamp, Gear	
87	0761215	2	Bolt M12 x 35	
88	1001112927	1	Pump Assembly - Sauer Gear (See Separate Breakdown in this Section)	
89	4891600	2	Washer 3/8	

ITEM	PART NUMBER	QTY	DESCRIPTION	REV
90	1001108616	1	Pump Assembly - Sauer Tandem (See Separate Breakdown in this Section)	
91	1001171095	1	Pump Assembly - Sauer Piston (See Separate Breakdown in this Section)	
92	3790152	1	O-Ring	
93	3790155	1	O-Ring	

FIGURE 3-17. DEUTZ TD2011 ENGINE COMPONENTS

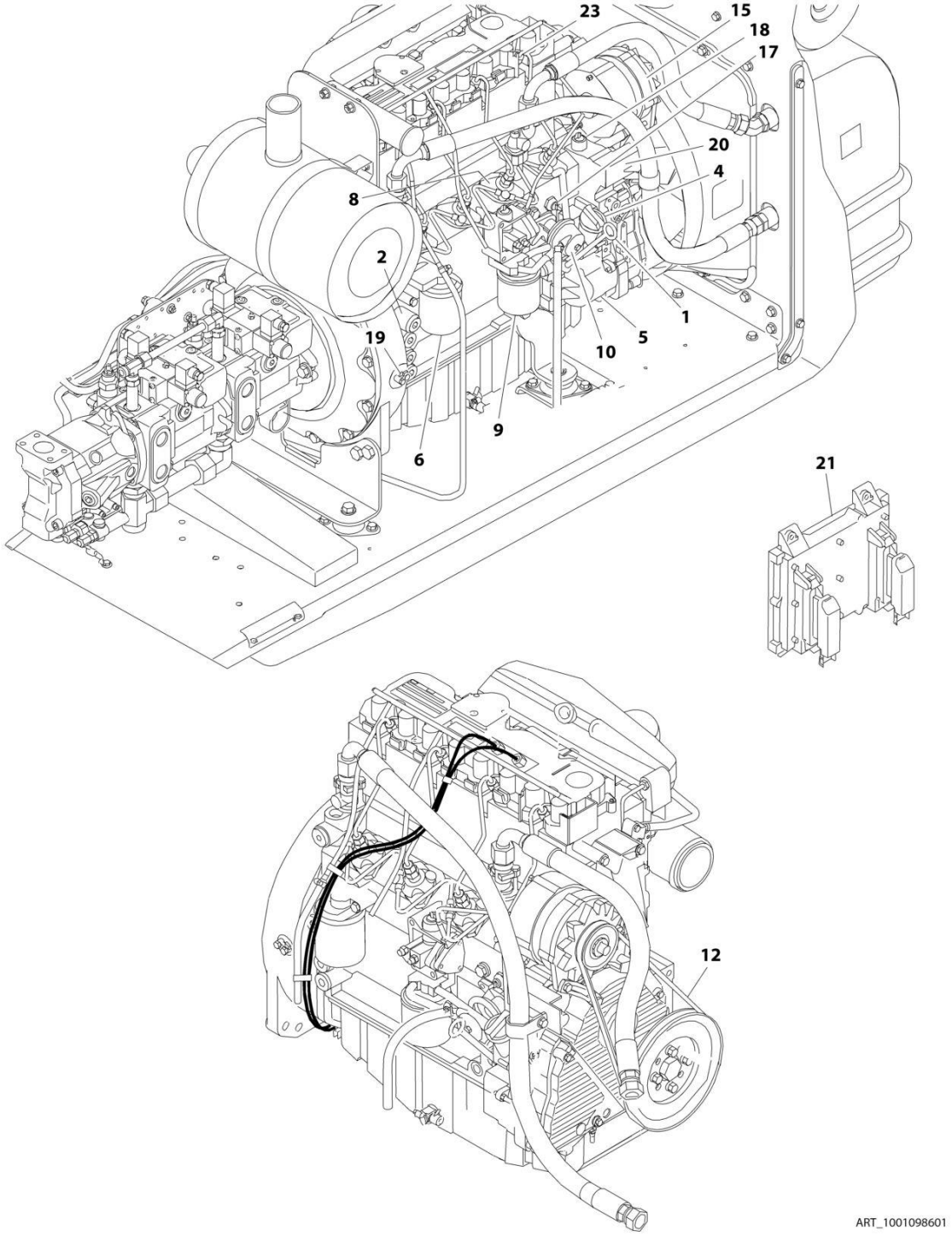

FIGURE 3-17. DEUTZ TD2011 ENGINE COMPONENTS

ITEM	PART NUMBER	QTY	DESCRIPTION	REV
	1001098601	Ref	DEUTZ TD2011 ENGINE COMPONENTS	C
1	7027235	1	Dipstick	
1	70000044	1	O-Ring	
2	70003475	1	Thermostat	
2	7020460	1	Compression Spring	
3	70001870	1	Flywheel (Not Shown)	
3	7024579	1	Gear, Ring (Not Shown)	
4	7020465	1	Cap, Filler	
5	70001850	1	Pump, Oil	
5	7020468	1	Seal Between Oil Pump and Engine Block (Not Shown)	
6	7016331	1	Filter, Oil	
6	7027236	1	Sender, Temperature (Located near Oil Filter)	
8		Ref	Injector Pump	
8	70001128	AR	"A" Series	
8	70001129	AR	"B" Series	
8	70001130	AR	"C" Series	
8	70001131	AR	"D" Series	
8	7020447	AR	Gasket (1 per Injector)	
9	7016328	1	Filter, Fuel	
10	70000916	1	Pump Fuel Supply	
10	70001435	1	Repair Kit	
10	70000917	1	O-Seal Between Fuel Pump and Engine Block (Not Shown)	
10	70000918	1	Sealing Ring (Not Shown)	
10	70000919	1	Pump, Hand (Not Shown)	
11	7027239	1	Solenoid, Start (Not Shown - Located near Throttle)	
12	7020414	1	V-Belt	
13	7020471	4	Gasket, Exhaust Manifold to Engine Block (Not Shown)	
13	7020486	1	Gasket, Exhaust Manifold to Exhaust Pipe (Not Shown)	
14	7027240	1	Turbocharger (Not Shown)	
14	70001857	1	Flange, Turbocharger (Not Shown)	
14	70001135	1	Gasket (Not Shown)	
15	70001867	1	Alternator	
15	70001868	1	Regulator, Voltage (Not Shown)	
16	7020479	1	Starter (Not Shown - Located on Right Side of Engine)	
16	7026608	1	Relay, Start (Not Shown)	
17	7027790	1	Sensor, Oil Pressure	
18	7027791	1	Sensor, Temperature (Not Shown)	
19	7024565	1	Sensor, Speed	
20	7027792	1	Actuator Throttle	
20	7027276	2	Spring	
21	1600443	1	Module, EMR2 Controller	
22	70002718	1	Seal, Rear Main (Not Shown)	
23	70003135	4	Injector, Fuel	
23	70003136	1	Ring, Sealing	
24	70001847	1	Valve, Breather (Located - Front Cover) (Not Shown)	
24	70001126	1	O-Ring (Not Shown)	
25	70001125	1	Cap, Breather (Located In Cylinder Head Cover) (Not Shown)	
25	70001126	1	O-Ring (Not Shown)	
26	70001871	4	Gasket, Air Intake Manifold (Not Shown)	
27	70000345	4	Plug, Glow (Not Shown)	

ITEM	PART NUMBER	QTY	DESCRIPTION	REV
28	70007353	1	Gasket Kit (Not Shown)	

FIGURE 3-18. DEUTZ TD2.9L4 ENGINE INSTALLATION - WITH SAUER PUMPS AND STEEL HOODS (CHINA & ANSI EXPORT LRC SPECS)

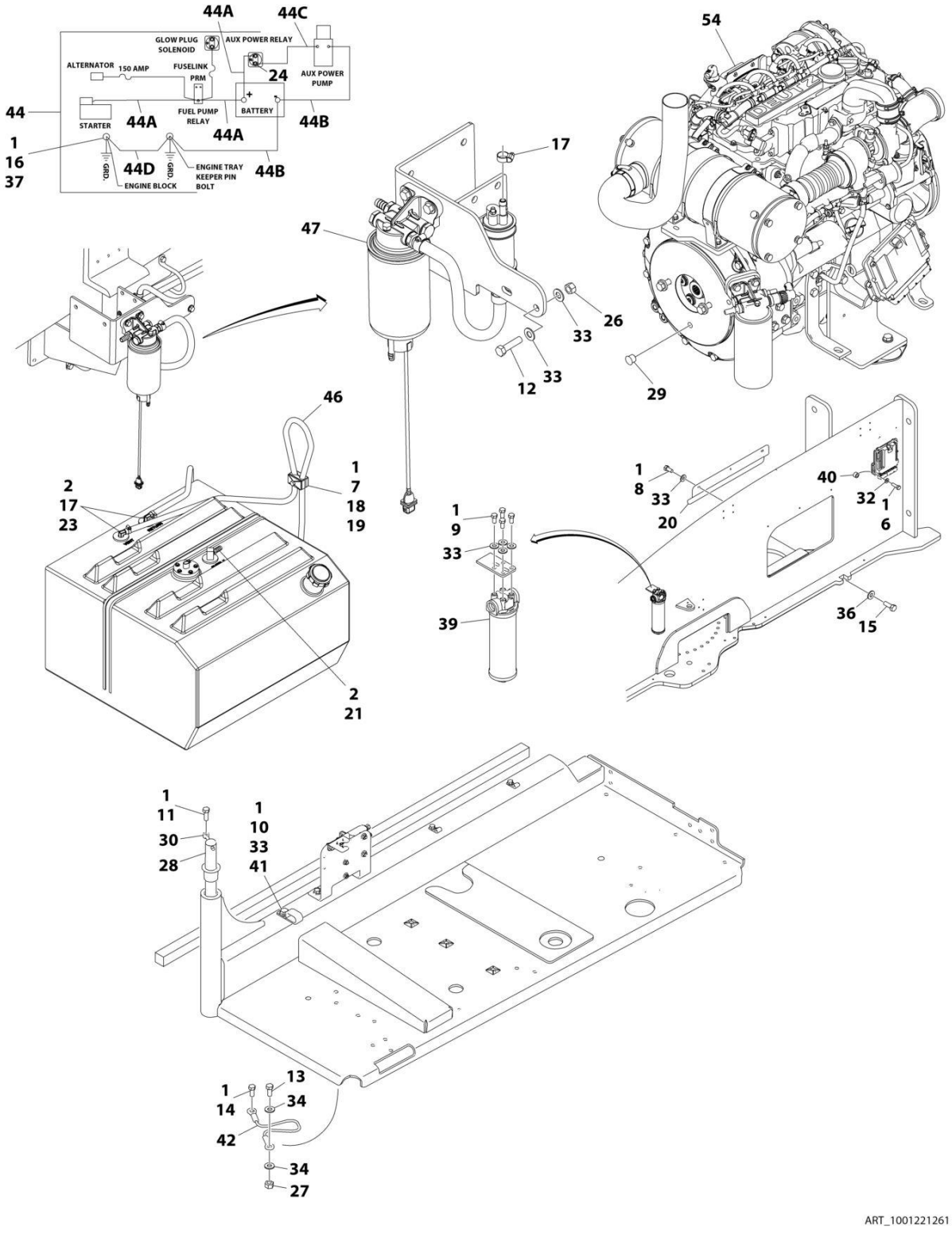

FIGURE 3-18. DEUTZ TD2.9L4 ENGINE INSTALLATION - WITH SAUER PUMPS AND STEEL HOODS (CHINA & ANSI EXPORT LRC SPECS)

ITEM	PART NUMBER	QTY	DESCRIPTION	REV
	1001221261	Ref	DEUTZ TD2.9L4 DIESEL ENGINE INSTALLATION - WITH SAUER PUMPS AND STEEL HOODS	D
1	0100011	AR	Compound, Locking	
2	0100079	AR	Sealant, Pipe	
6	0641410	4	Bolt 1/4 x 1-1/4	
7	0641511	1	Bolt 5/16 x 1-3/8	
8	0641605	3	Bolt 3/8 x 5/8	
9	0641606	4	Bolt 3/8 x 3/4	
10	0641608	1	Bolt 3/8 x 1	
11	0641610	1	Bolt 3/8 x 1-1/4	
12	0641612	2	Bolt 3/8 x 1-1/2	
13	0641708	1	Bolt 7/16 x 1	
14	0641808	1	Bolt 1/2 x 1	
15	0642010	1	Bolt 5/8 x 1-1/4	
16	0761210	1	Bolt M12 x 20	
17	1320022	3	Clamp	
18	1320187	1	Clamp	
19	1320190	1	Cover, Clamp	
20	1671121	1	Cover	
21	2180832	1	Fitting, Barbed	
23	2220313	2	Fitting, Elbow Barbed	
24	3300220	2	Nut 5/16	
26	3311605	2	Nut 3/8	
27	3311705	1	Nut 7/16	
28	3422446	1	Pin, Pivot	
29	3520054	1	Plug	
30	3841143	1	Pin, Keeper	
31	4240018	2	Strap, Tie (Not Shown)	
32	4711400	4	Washer 1/4	
33	4711600	12	Washer 3/8	
34	4711700	2	Washer 7/16	
36	4752000	1	Washer 5/8	
37	4812100	1	Washer M12	
39	1001108617	1	Filter	
39	70002231	1	Element, Filter	
40	1001110425	4	Spacer	
41	1001116792	1	Clamp	
42	1001131542	1	Lanyard	
43	1001138491	NLA	Harness, Fuel (Use p/n 1001222665) (Not Shown - See Separate Breakdown in ELECTRICAL SECTION)	
44	1001141225	1	Battery Cable Kit	E
44A	7027042	1	Cable, Battery (Red) (Battery + to Relays and Starter)	
44B	7027043	1	Cable, Battery (Black) (Battery - to Tray Pivot Grd and Aux Pump)	
44C	7027044	1	Cable (Red) (Aux Relay to Aux Pump)	
44D	7027045	1	Cable, Battery (Black) (Engine to Tray Pivot Grd)	
46	2750532	5 ft/ 1.5m	Hose	
47	1001227606	1	Bracket, Fuel Pump Filter Assembly (See Separate Breakdown in this Section)	

SECTION 3 - ENGINE

ITEM	PART NUMBER	QTY	DESCRIPTION	REV
54	1001221265	1	Engine Sub-Assembly (See Separate Breakdown in this Section)	

FIGURE 3-19. DEUTZ TD2.9L4 ENGINE SUB-ASSEMBLY - WITH SAUER PUMPS (CHINA & ANSI EXPORT LRC SPECS)

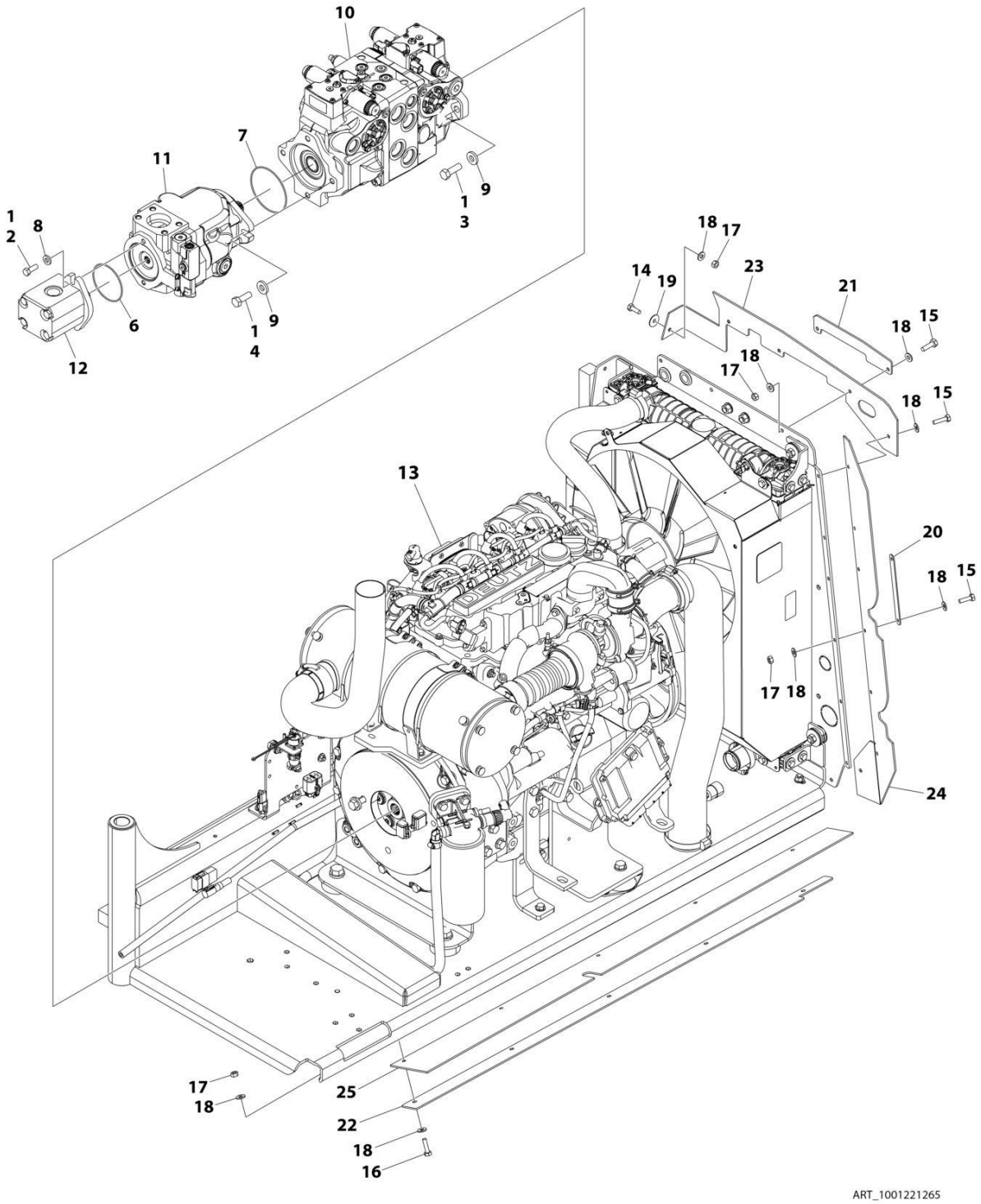

FIGURE 3-19. DEUTZ TD2.9L4 ENGINE SUB-ASSEMBLY - WITH SAUER PUMPS (CHINA & ANSI EXPORT LRC SPECS)

ITEM	PART NUMBER	QTY	DESCRIPTION	REV
	1001221265	Ref	DEUTZ TD2.9L4 ENGINE SUB-ASSEMBLY	R
1	0100011	AR	Compound, Locking	
2	0641608	2	Bolt 3/8 x 1	
3	0641812	2	Bolt 1/2 x 1-1/2	
4	0761215	2	Bolt M12 x 35	
6	3790152	1	O-Ring	
7	3790155	1	O-Ring	
8	4891600	2	Washer 3/8	
9	4891800	4	Washer 1/2	
10	1001108616	1	Pump Assembly (Sauer Tandem) (See Separate Breakdown in this Section)	
11	1001171095	1	Pump Assembly (Sauer Piston) (See Separate Breakdown in this Section)	
12	1001112927	1	Pump Assembly (Sauer Gear) (See Separate Breakdown in this Section)	
13	1001220735	1	Deutz TD2.9L4 Engine Assembly (See Separate Breakdown in this Section)	
14	0641406	AR	Bolt 1/4 x 3/4	
15	0641407	8	Bolt 1/4 x 7/8	
16	0641408	AR	Bolt 1/4 x 1	
16	0641407	AR	Bolt 1/4 x 7/8	
17	3311405	16	Nut 1/4	
18	4711400	AR	Washer 1/4	
19	4740430	AR	Washer, Fender	
20	1001167164	3	Plate, Support	
21	1001177945	1	Bracket	
22	1001177946	1	Bracket	
23	1001177957	1	Seal, Rubber Baffle	
24	1001177958	1	Seal, Rubber Baffle	
25	1001177959	1	Seal, Rubber Baffle	

FIGURE 3-20. DEUTZ TD2.9L4 ENGINE ASSEMBLY (CHINA & ANSI EXPORT LRC SPECS)

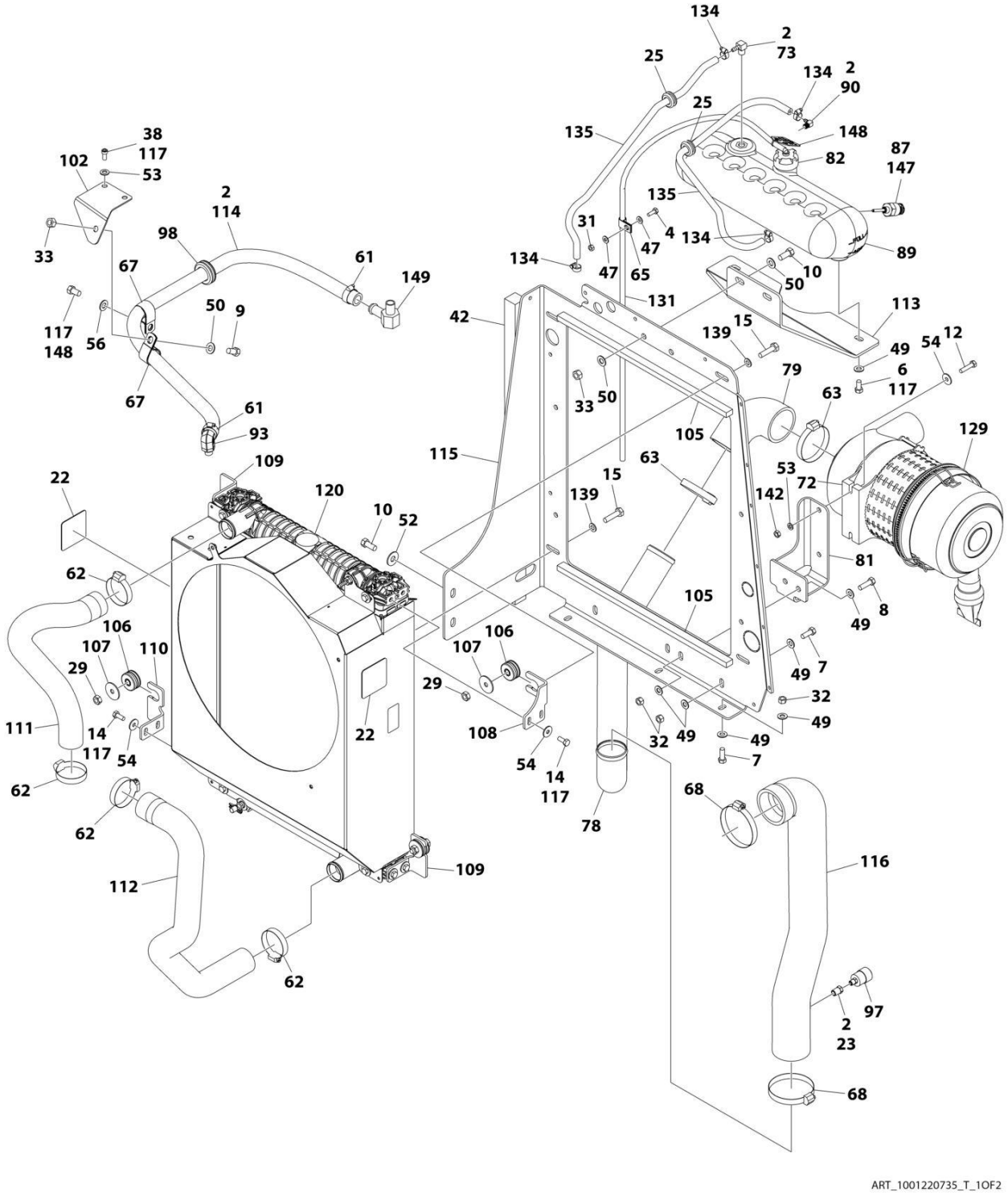

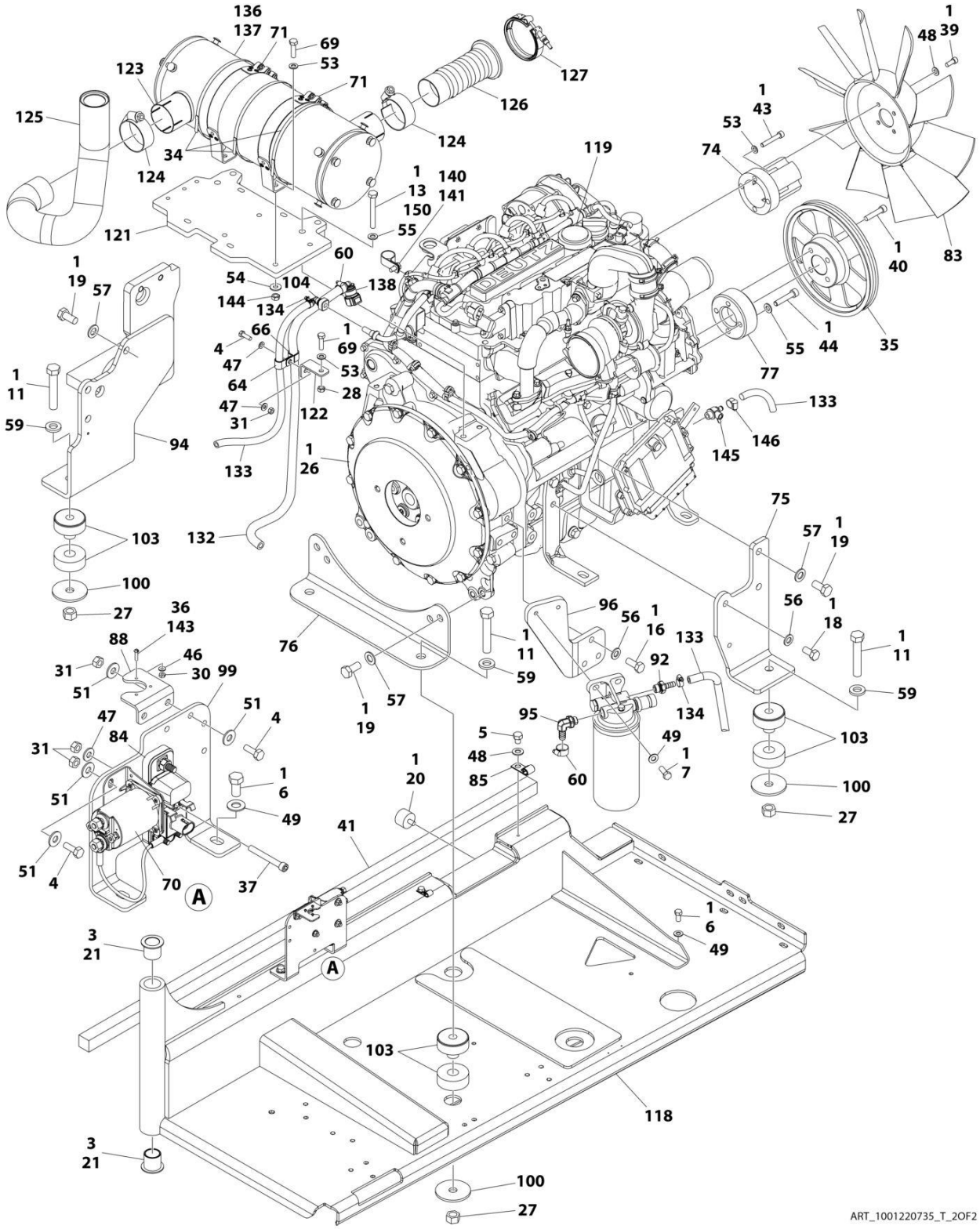
ART_1001220735_T_2OF2

FIGURE 3-20. DEUTZ TD2.9L4 ENGINE ASSEMBLY (CHINA & ANSI EXPORT LRC SPECS)

ITEM	PART NUMBER	QTY	DESCRIPTION	REV
	1001220735	Ref	DEUTZ TD2.9L4 ENGINE ASSEMBLY	T
1	0100011	AR	Compound, Locking	
2	0100020	AR	Sealant	
3	0100062	AR	Adhesive, Loctite #680	
4	0641406	7	Bolt 1/4 x 3/4	
5	0641503	2	Bolt 5/16 x 3/8	
6	0641606	5	Bolt 3/8 x 3/4	
7	0641608	7	Bolt 3/8 x 1	
8	0641610	2	Bolt 3/8 x 1-1/4	
9	0641706	AR	Bolt 7/16 x 3/4	
10	0641708	4	Bolt 7/16 x 1	
11	0682028	4	Bolt 5/8 x 3-1/2 Grade 8	
12	0700815	2	Bolt M8 x 35	
13	0701024	AR	Bolt M10 x 80	
13	0701025	AR	Bolt M10 x 85	
14	0760810	8	Bolt M8 x 20	
15	0761016	4	Bolt M10 x 40	
16	0761214	3	Bolt M12 x 30	
18	0771212	1	Bolt M12 x 25 Grade 10.9	
19	0771414	9	Bolt M14 x 30 Grade 10.9	
20	0940070	1	Bumper	
21	0961986	2	Bushing, Flanged	
22	1703162	2	Decal - Fan	
23	2220273	1	Fitting, Straight NPTF/FNPTF	
25	2540038	2	Grommet	
26	2902065	1	Pump Coupling Kit (See Separate Breakdown in this Section)	
27	3272001	4	Nut 5/8 Grade 8	
28	3290801	AR	Nut M8	
29	3291001	4	Nut M10	
29	3291007	4	Nut M10	
30	3310401	3	Nut #4	
31	3311405	8	Nut 1/4	
32	3311605	7	Nut 3/8	
33	3311705	3	Nut 7/16	
34	1001137336	AR	Strap	
35	3580320	1	Pulley	
36	3910408	3	Screw #4 x 1/2	
37	3931432	1	Capscrew 1/4 x 2	
38	3931508	2	Capscrew 5/16 x 1/2	
38	4031907	2	Capscrew M8 x 16	
39	3931512	4	Capscrew 5/16 x 3/4	
40	3931628	4	Capscrew 3/8 x 1-3/4	
41	3960543	1	Seal	
42	3960544	1	Seal	
43	4031914	4	Bolt M8 x 50	
44	4032014	4	Bolt M10 x 50	
45	4240099	AR	Tie-Strap (Not Shown)	
46	4710400	3	Washer #4	
47	4711400	7	Washer 1/4	
48	4711500	AR	Washer 5/16	

ITEM	PART NUMBER	QTY	DESCRIPTION	REV
49	4711600	21	Washer 3/8	
50	4711700	6	Washer 7/16	
51	4751400	8	Washer 1/4	
52	4751700	2	Washer 7/16	
53	4811900	13	Washer M8	
54	4811902	14	Washer M8	
55	4812000	AR	Washer M10	
56	4812100	AR	Washer M12	
57	4812200	9	Washer M14	
59	4892000	4	Washer 5/8	
60	8405006	2	Clamp	
61	8405007	2	Clamp	
62	8405201	4	Clamp	
63	8405204	2	Clamp	
64	8406102	1	Clip	
65	8406109	2	Clip	
66	8406112	1	Clip	
67	8406302	2	Clamp	
68	8410011	2	Clamp	
69	0760814001	1	Bolt M8 x 30	
69	0760814	5	Bolt M8 x 30	
70	1001117308	1	Relay	
71	1001119727	2	Clamp	
72	1001133634	1	Clamp	
73	1001134488	1	Fitting, 90 Barbed	
74	1001135138	1	Spacer, Fan	
75	1001135560	1	Support, Engine	
76	1001135562	1	Support, Engine - Rear	
77	1001135679	1	Spacer, Pulley	
78	1001135903	1	Pipe, Air Intake	
79	1001135946	1	Elbow, Rubber	
81	1001136665	1	Bracket	
82	1001136834	1	Cap, Tank	
83	1001137276	1	Fan	
84	1001138228	1	Module, Power	
84	70023592	1	Fuse 20Amp (Switched Output)	
84	70023593	1	Fuse 30Amp (Battery Output)	
85	1001138253	2	Clamp	
86	1001138346	1	Harness, Engine (Not Shown - See Separate Breakdown in ELECTRICAL Section)	
87	1001138827	1	Sensor, Coolant Level	
88	1001139240	1	Bracket	
89	1001166393	1	Tank, Surge	
90	1001140564	1	Fitting, 90 Barbed	
91	1001141304	1	Wire, Glow Plug (Not Shown)	
92	1001141717	1	Fitting, Straight	
93	1001141719	1	Fitting, 90 Barbed	
94	1001283008	1	Support, Engine	
95	1001142501	1	Fitting, 90 Barbed	
96	1001142685	1	Bracket	
97	1001143390	1	Indicator, Air Filter Service	
98	1001144089	1	Grommet	

ITEM	PART NUMBER	QTY	DESCRIPTION	REV
99	1001145154	1	Plate, Mounting	
100	1001146219	4	Washer Special	
101	1001148843	1	Harness, Fuel Filter (Not Shown - See Separate Breakdown in ELECTRICAL Section)	
102	1001229600	1	Plate	
103	1001155575	4	Mount, Motor	
104	1001155823	1	Coupling	
105	1001168166	2	Seal	
106	1001169054	4	Isolator	
107	1001169138	4	Pad	
108	1001170035	1	Bracket	
109	1001176329	2	Bracket	
110	1001176330	1	Bracket	
111	1001176415	1	Hose, Radiator (Upper)	
112	1001176416	1	Hose, Radiator (Lower)	
113	1001229599	1	Bracket	
114	1001138524	1	Hose	
115	1001178236	1	Support, Radiator	
116	1001178894	1	Hose, Air Intake	
117	1001180620	AR	Adhesive	
118	1001187011	1	Tray	
119	1001219642	1	Engine, Deutz TD2.9L4 (See Separate Breakdown in this Section)	
120	1001220770	1	Radiator	
121	1001221203	1	Muffler Bracket Assembly	
122	1001221205	1	Bracket	
123	1001151432	1	Muffler	
124	1001221212	2	Clamp	
125	1001257155	1	Pipe, Exhaust	
126	1001221217	1	Pipe, Flex Assembly	
127	1001221219	1	Clamp	
129	1001133633	1	Air Cleaner Assembly	
129	70024190	1	Element, Air Filter	
130	1001135779	1	Cable, Alternator Positive (Not Shown)	
131	1001138248	4 ft /1.2 m	Tubing	
132	1001154405	5 ft /2 m	Hose	
133	1001165035	31 ft /10 m	Hose	
134	1320022	6	Clamp	
135	2720015	5 ft /2 m	Hose	
136	1001221427	1	Muffler-Wrap Assembly	
137	4920385	AR	Wire, Safety	
138	1001170982	1	Adapter	
139	4812002	4	Washer M10	
140	1320130	1	Clamp	
141	5250808	1	Bolt M8 x 16	
142	3290805	2	Nut, M10 (Not Shown)	
143	0100035	AR	Compound, Locking	
144	3290807	4	Nut M8	
145	4640751	1	Valve, Oil Drain	
146	8410013	1	Clamp, Gear	
147	1001182997	AR	Adhesive	
148	0761210	1	Bolt M12 x 20	

ITEM	PART NUMBER	QTY	DESCRIPTION	REV
149	1001138559	1	Fitting, 90	
150	0701022	AR	Bolt M10 x 70	
151	4240032	AR	Tie-Strap (Not Shown)	
152	1001291401	1	Tag, Coolant	

FIGURE 3-21. DEUTZ TD2.9L4 ENGINE COMPONENTS (CHINA & ANSI EXPORT LRC SPECS)

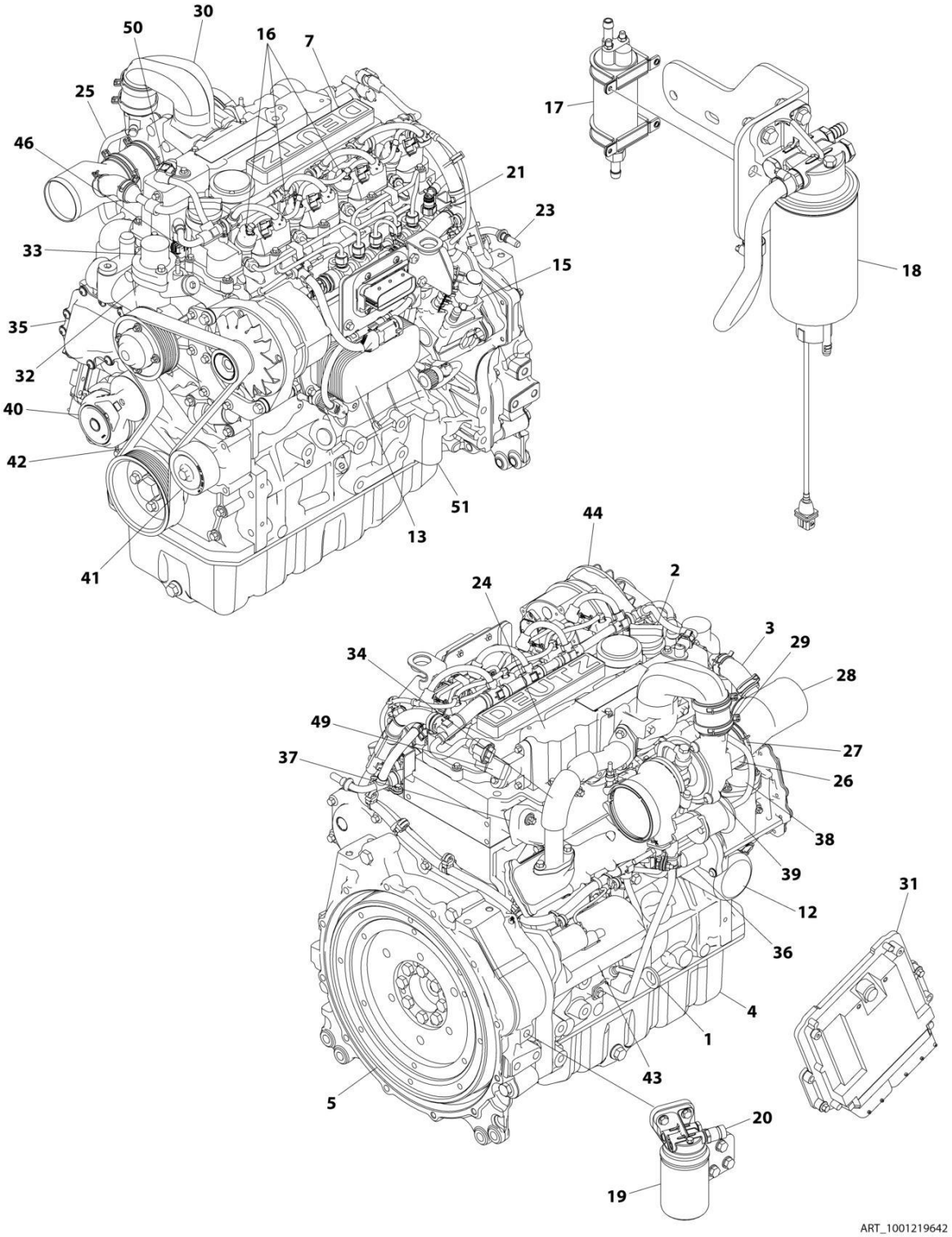

FIGURE 3-21. DEUTZ TD2.9L4 ENGINE COMPONENTS (CHINA & ANSI EXPORT LRC SPECS)

ITEM	PART NUMBER	QTY	DESCRIPTION	REV
	1001219642	Ref	DEUTZ TD2.9L4 ENGINE COMPONENTS	D
1	70006127	1	Dipstick	
1	70024905	1	O-Ring	
2	7020465	2	Cap, Filler	
3	70005920	1	Hose	
3	70025111	2	Clamp	
4	70025162	1	Pan, Oil	
4	70005941	2	Plug	
4	70005942	2	Washer, Sealing	
5	70001870	1	Flywheel	
5	7024579	1	Gear, Ring	
6	70024906	1	Gasket, Head (Not Shown)	
7	70005921	1	Cover, Valve	
7	70025205	1	Gasket	
7	70005171	1	Gasket	
8	70025076	1	Valve (Not Shown - Located on Right Side of Front Engine Cover)	
8	70025176	1	Spring	
8	70025082	1	Ring, Sealing	
8	70025091	1	Plug	
9	70004280	1	Seal, Shaft - Front (Not Shown)	
10	70002718	1	Seal, Shaft - Rear (Not Shown)	
11	70005172	1	Pump, Oil Lube (Not Shown)	
11	70025135	1	O-Ring	
11	70005173	1	Gasket	
12	7016331	1	Filter, Oil	
12	70025137	1	Bushing	
13	70024494	1	Cooler, Engine Oil (Not Shown - Located on Right Side)	
13	70024925	1	Gasket	
14	70025171	1	Oil Suction Pump (Not Shown - Located Inside of Engine Oil Pan)	
15	70024924	1	Pump, Fuel	
15	70025152	1	O-Ring	
15	70025080	1	Washer	
15	70024488	1	Spacer	
15	70024517	1	O-Ring	
16	70025181	4	Injector, Fuel (Not Shown - Located on Right Side)	
16	70025140	4	Washer, Sealing	
16	70025146	4	Clamp (Top of Injector)	
16	70025145	4	O-Ring	
16	70025154	4	Shoe, Clamping	
16	70000345	1	Plug, Glow (Not Shown)	
16	70025231	1	Harness, Glow Plug (Not Shown)	
17	70005174	NLA	Pump, Fuel (Use p/n 1001226098)	
17	70025144	2	Clamp	
18	70024961	1	Fuel Filter Assembly	
18	70025153	NLA	Filter, Fuel (Use p/n 1001225430)	
18	70024513	1	Cable, Sensor	
18	70025239	1	Ring, Sealing	
19	70004511	1	Filter with Head	
19	70004512	NLA	Filter, Fuel (Use p/n 1001225432)	
20	70024504	1	Sensor, Pressure	

ITEM	PART NUMBER	QTY	DESCRIPTION	REV
20	70024920	1	O-Ring	
21	70025151	1	Rail, Fuel	
21	70025235	1	Repair Kit	
21	70025240	1	O-Ring	
22	70025182	1	Fuel Line - High Pressure (Cylinder 1 & 2) (Not Shown)	
22	70025183	1	Fuel Line - High Pressure (Cylinder 3 & 4) (Not Shown)	
22	70025184	1	Fuel Line - High Pressure (Supply) (Not Shown)	
23	70025158	1	Manifold, Fuel	
23	70025109	2	Clamp	
23	70025115	1	Clamp	
23	70025133	1	Hose	
23	70024502	1	Pipe	
23	70025185	1	Hose	
23	70025101	2	Clamp	
24	70005923	1	Charge Air Pipe	
24	70005924	1	O-Ring	
24	70005177	1	Gasket	
25	70005925	1	Breather Line	
25	70005181	1	O-Ring	
26	70004501	1	Sleeve, Rubber	
27	70025112	2	Clamp	
28	70005926	1	Elbow Connector	
29	70005927	1	Sleeve, Rubber	
29	70025107	2	Clamp	
30	70005928	1	Charge Air Elbow	
31	70025210	1	ECU (Engine Control Unit)	
32	70024910	1	Pump, Water	
32	70025200	1	Ring, Sealing	
32	70025084	2	Plug	
32	7020492	2	Ring, Sealing	
33	70005929	1	Thermostat	
33	70005184	1	O-Ring	
33	70025142	1	Cover, Thermostat	
33	70025931	1	Gasket	
34	70025178	1	Pipe	
34	70025768	1	Valve, Shuttle	
34	70025179	2	Gasket	
34	70025180	1	Gasket	
35	70025203	1	Module, EGR (Includes Item 36)	
35	70025155	1	Plug	
36	70005188	1	Control Valve	
36	70005189	1	Seal	
37	70004282	1	Manifold, Exhaust	
37	70025164	1	Gasket, Exhaust Manifold to Head	
38	70026995	1	Pipe (Not Shown - Located on Left Side)	
38	70021895	2	Gasket	
39	70004276	1	Turbocharger	
39	70024912	1	Gasket, Exhaust Manifold	
39	70024509	1	Gasket, Return Line	
40	70025477	1	Tensioner, Belt	
41	70024484	1	Idler Roller	

ITEM	PART NUMBER	QTY	DESCRIPTION	REV
42	70004277	1	Belt, Drive	
43	70024915	1	Starter	
43	70005647	1	Switch, Solenoid	
43	70005648	1	Relay	
44	70025533	1	Generator	
44	70025149	1	Regulator, Voltage	
45	70025077	1	Harness, Engine (Not Shown)	
46	70024918	1	Sender, Temperature	
47	70024504	1	Sensor, Pressure (Not Shown - Located on Right Side)	
47	70024920	1	O-Ring	
48	70026210	2	Sensor, Speed (Not Shown - Located Left Side Front and Flywheel Housing)	
48	70005191	2	O-Ring	
49	70024507	1	Sensor, Pressure (Not Shown - Located Top Rear)	
49	70025120	1	O-Ring	
50	70024922	1	Temperature, Transmitter	
50	70035212	1	O-Ring	
51	70025660	1	Screw	

FIGURE 3-22. DEUTZ TCD2.9L4 (EMR4) ENGINE INSTALLATION - WITH REXROTH PUMPS AND ABS HOODS (WITHOUT COLD WEATHER PLUS PACKAGE)

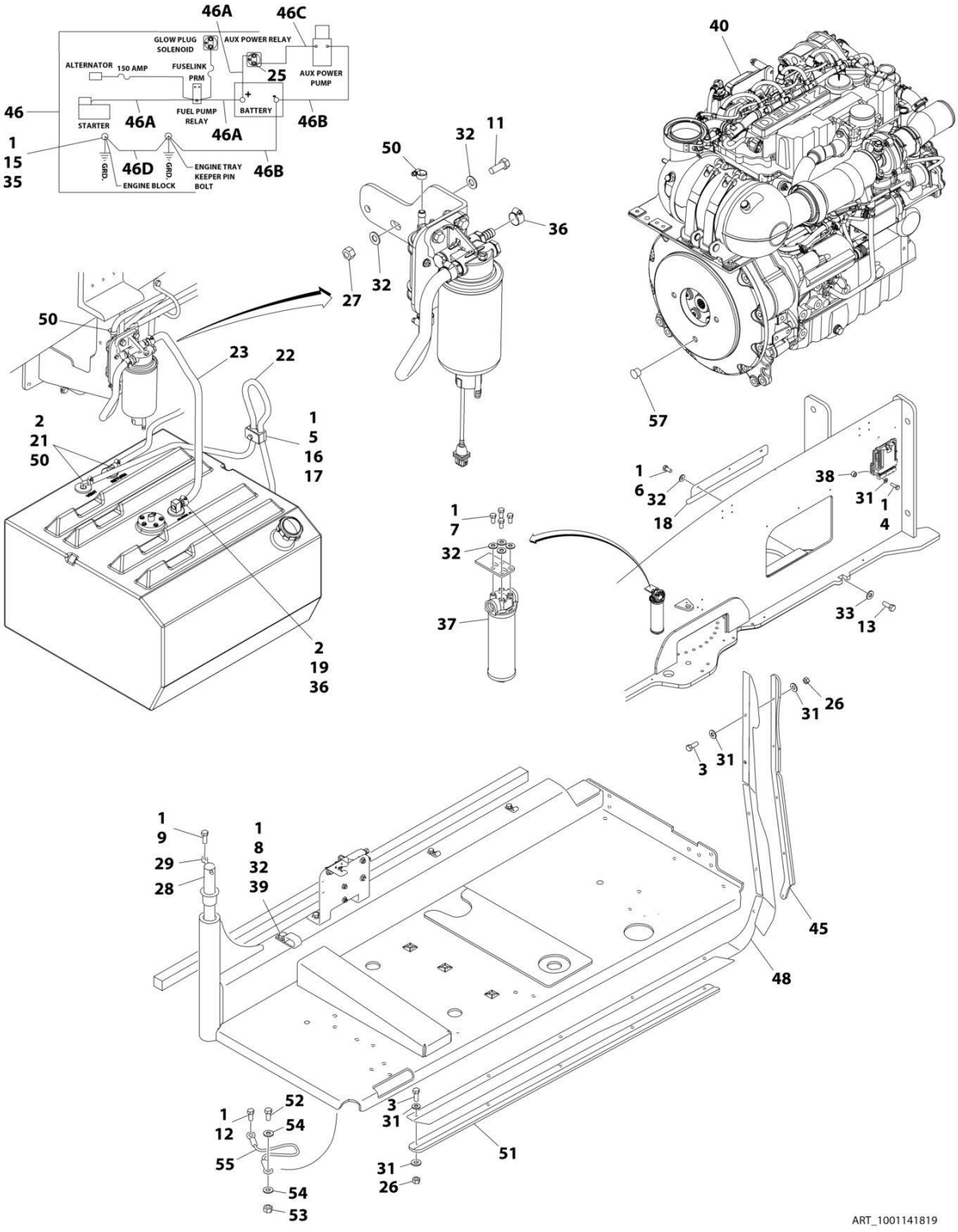

FIGURE 3-22. DEUTZ TCD2.9L4 (EMR4) ENGINE INSTALLATION - WITH REXROTH PUMPS AND ABS HOODS (WITHOUT COLD WEATHER PLUS PACKAGE)

ITEM	PART NUMBER	QTY	DESCRIPTION	REV
	1001141819	Ref	DEUTZ TCD2.9L4 DIESEL ENGINE INSTALLATION - WITH REXROTH PUMPS AND ABS HOODS (WITHOUT COLD WEATHER PLUS PACKAGE)	K
1	0100011	AR	Compound, Locking	
2	0100079	AR	Sealant, Pipe	
3	0641408	10	Bolt 1/4 x 1	
4	0641410	4	Bolt 1/4 x 1-1/4	
5	0641511	1	Bolt 5/16 x 1-3/8	
6	0641605	3	Bolt 3/8 x 5/8	
7	0641606	4	Bolt 3/8 x 3/4	
8	0641608	1	Bolt 3/8 x 1	
9	0641610	1	Bolt 3/8 x 1-1/4	
11	0641612	2	Bolt 3/8 x 1-1/2	
12	0641808	1	Bolt 1/2 x 1	
13	0642010	1	Bolt 5/8 x 1-1/4	
15	0761210	1	Bolt M12 x 20	
16	1320187	1	Clamp	
17	1320190	1	Cover, Clamp	
18	1671121	1	Cover	
19	2180832	1	Fitting, Barbed	
21	2220313	2	Fitting, Elbow Barbed	
22	2750532	5 ft/ 1.5m	Hose	
23	1001154405	2 ft/ 0.6m	Hose	
25	3300220	2	Nut 5/16	
26	3311405	10	Nut 1/4	
27	3311605	2	Nut 3/8	
28	3422446	1	Pin, Pivot	
29	3841143	1	Pin, Keeper	
30	4240018	2	Strap, Tie (Not Shown)	
31	4711400	24	Washer 1/4	
32	4711600	12	Washer 3/8	
33	4752000	1	Washer 5/8	
35	4812100	1	Washer M12	
36	8405006	2	Clamp	
37	1001108617	1	Filter	
37	70002231	1	Element, Filter	
38	1001110425	4	Spacer	
39	1001116792	1	Clamp	
40	1001141812	1	Engine Sub-Assembly (See Separate Breakdown in this Section)	
42	1001138491	NLA	Harness, Fuel (Use p/n 1001222665) (Not Shown - See Separate Breakdown in ELECTRICAL SECTION)	
45	1001145089	1	Clamp	
46	1001141225	1	Battery Cable Kit	
46A	7027042	1	Cable, Battery (Red) (Battery + to Relays and Starter)	
46B	7027043	1	Cable, Battery (Black) (Battery - to Tray Pivot Grd and Aux Pump)	
46C	7027044	1	Cable (Red) (Aux Relay to Aux Pump)	
46D	7027045	1	Cable, Battery (Black) (Engine to Tray Pivot Grd)	
48	1001145560	1	Panel, Rubber	
50	1320022	3	Clamp	

SECTION 3 - ENGINE

ITEM	PART NUMBER	QTY	DESCRIPTION	REV
51	1001145842	1	Plate, Clamping	
52	0641708	1	Bolt 7/16 x 1	
53	3311705	1	Nut 7/16	
54	4711700	2	Washer 7/16	
55	1001131542	1	Lanyard	
57	3520054	1	Plug	

FIGURE 3-23. DEUTZ TCD2.9L4 (EMR4) ENGINE INSTALLATION - WITH REXROTH PUMPS AND STEEL HOODS (WITHOUT COLD WEATHER PLUS PACKAGE)

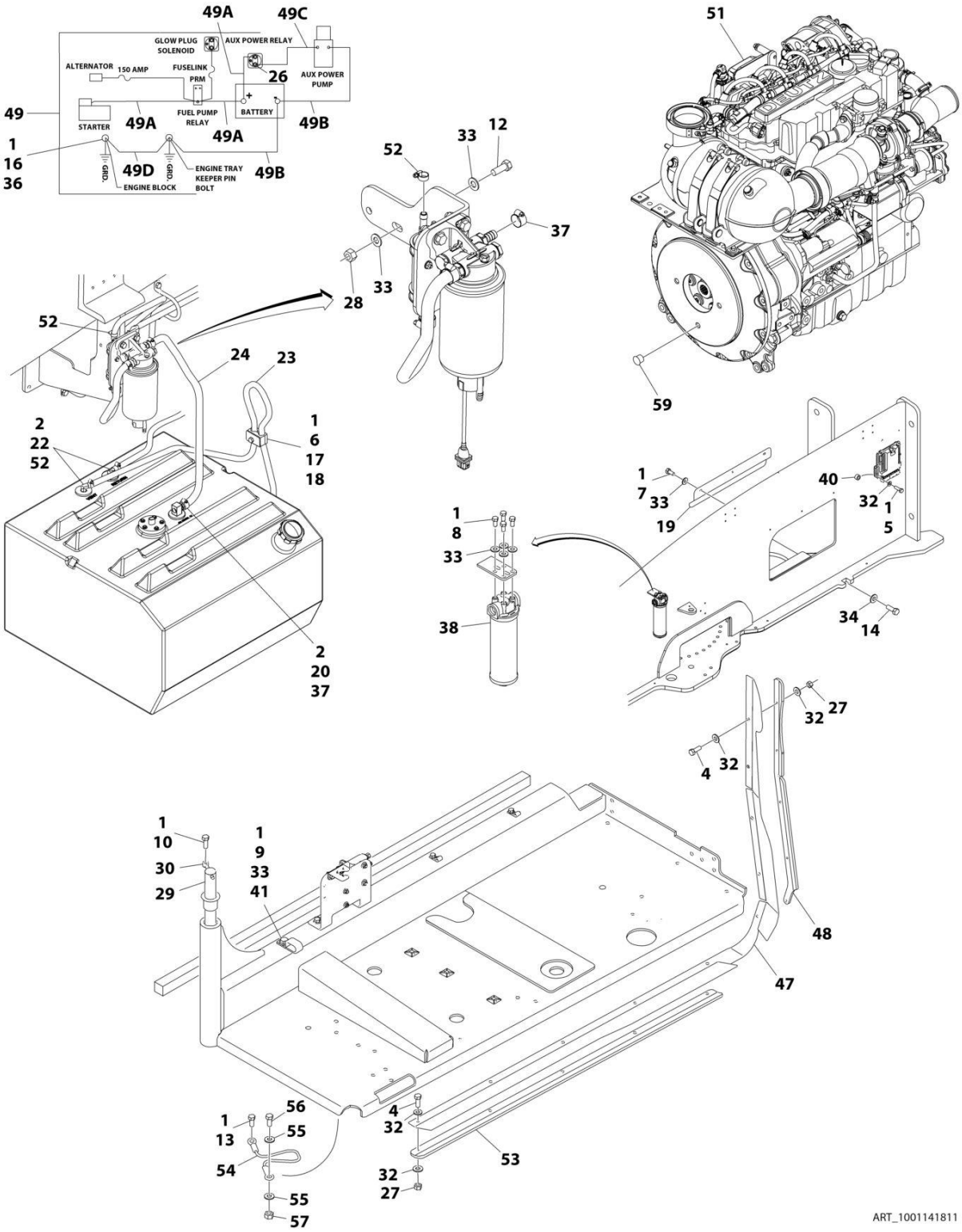

FIGURE 3-23. DEUTZ TCD2.9L4 (EMR4) ENGINE INSTALLATION - WITH REXROTH PUMPS AND STEEL HOODS (WITHOUT COLD WEATHER PLUS PACKAGE)

ITEM	PART NUMBER	QTY	DESCRIPTION	REV
	1001141811	Ref	DEUTZ TCD2.9L4 DIESEL ENGINE INSTALLATION - WITH REXROTH PUMPS AND STEEL HOODS (WITHOUT COLD WEATHER PLUS PACKAGE)	K
1	0100011	AR	Compound, Locking	
2	0100079	AR	Sealant, Pipe	
4	0641408	10	Bolt 1/4 x 1	
5	0641410	4	Bolt 1/4 x 1-1/4	
6	0641511	1	Bolt 5/16 x 1-3/8	
7	0641605	3	Bolt 3/8 x 5/8	
8	0641606	4	Bolt 3/8 x 3/4	
9	0641608	1	Bolt 3/8 x 1	
10	0641610	1	Bolt 3/8 x 1-1/4	
12	0641612	2	Bolt 3/8 x 1-1/2	
13	0641808	1	Bolt 1/2 x 1	
14	0642010	1	Bolt 5/8 x 1-1/4	
16	0761210	1	Bolt M12 x 20	
17	1320187	1	Clamp	
18	1320190	1	Cover, Clamp	
19	1671121	1	Cover	
20	2180832	1	Fitting, Barbed	
22	2220313	2	Fitting, Elbow Barbed	
23	2750532	5 ft/ 1.5m	Hose	
24	1001154405	2 ft/ 0.6m	Hose	
26	3300220	2	Nut 5/16	
27	3311405	10	Nut 1/4	
28	3311605	2	Nut 3/8	
29	3422446	1	Pin, Pivot	
30	3841143	1	Pin, Keeper	
31	4240018	2	Strap, Tie (Not Shown)	
32	4711400	24	Washer 1/4	
33	4711600	12	Washer 3/8	
34	4752000	1	Washer 5/8	
36	4812100	1	Washer M12	
37	8405006	2	Clamp	
38	1001108617	1	Filter	
38	70002231	1	Element, Filter	
40	1001110425	4	Spacer	
41	1001116792	1	Clamp	
43	1001138491	NLA	Harness, Fuel (Use p/n 1001222665) (Not Shown - See Separate Breakdown in ELECTRICAL SECTION)	
47	1001140604	1	Panel, Rubber	
48	1001145089	1	Clamp	
49	1001141225	1	Battery Cable Kit	E
49A	7027042	1	Cable, Battery (Red) (Battery + to Relays and Starter)	
49B	7027043	1	Cable, Battery (Black) (Battery - to Tray Pivot Grd and Aux Pump)	
49C	7027044	1	Cable (Red) (Aux Relay to Aux Pump)	
49D	7027045	1	Cable, Battery (Black) (Engine to Tray Pivot Grd)	
51	1001141812	1	Engine Sub-Assembly (See Separate Breakdown in this Section)	
52	1320022	3	Clamp	

SECTION 3 - ENGINE

ITEM	PART NUMBER	QTY	DESCRIPTION	REV
53	1001145842	1	Plate, Clamping	
54	1001131542	1	Lanyard	
55	4711700	2	Washer 7/16	
56	0641708	1	Bolt 7/16 x 1	
57	3311705	1	Nut 7/16	
59	3520054	1	Plug	

FIGURE 3-24. DEUTZ TCD2.9L4 (EMR4) ENGINE INSTALLATION - WITH REXROTH PUMPS AND STEEL HOODS (WITH COLD WEATHER PLUS PACKAGE)

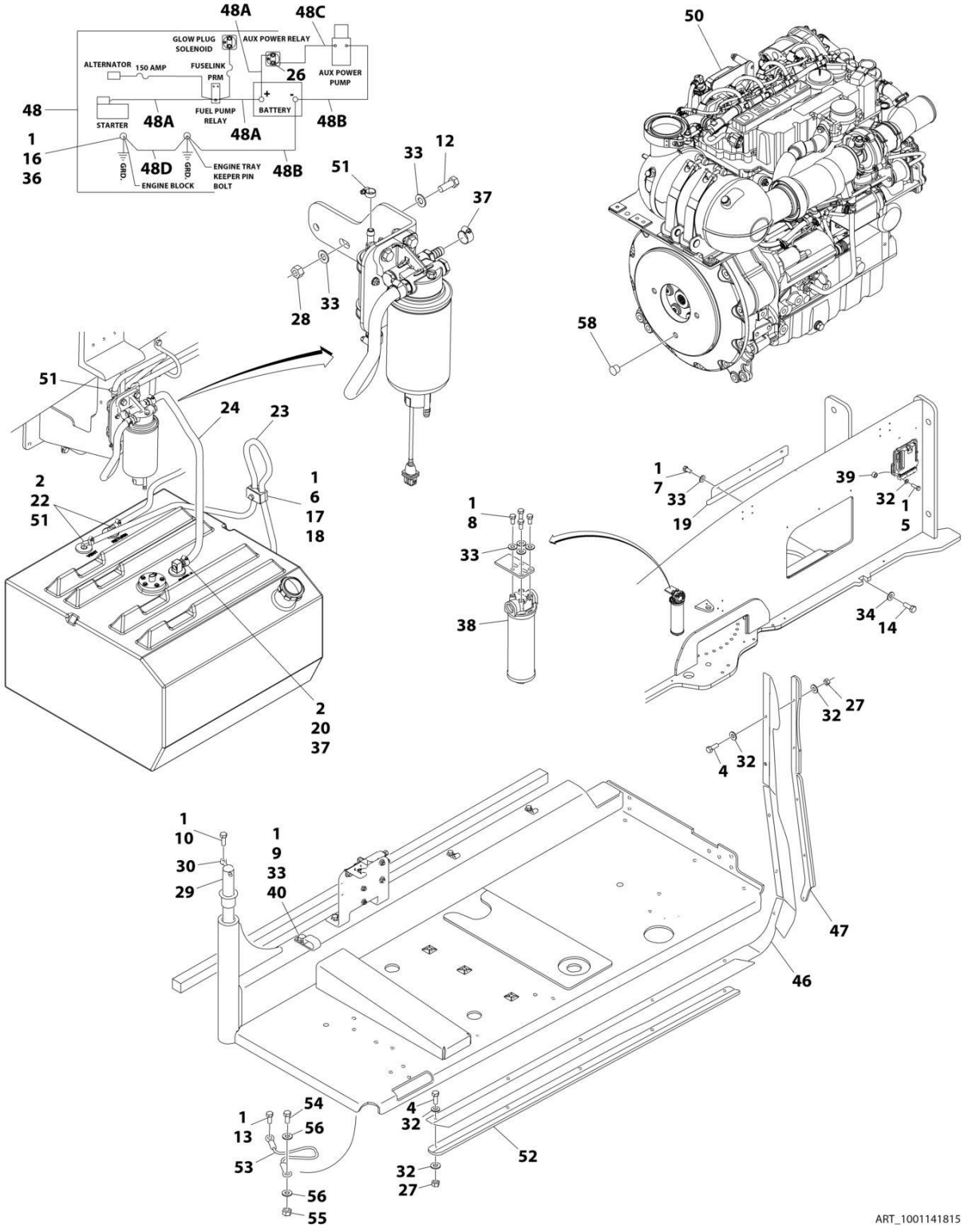

FIGURE 3-24. DEUTZ TCD2.9L4 (EMR4) ENGINE INSTALLATION - WITH REXROTH PUMPS AND STEEL HOODS (WITH COLD WEATHER PLUS PACKAGE)

ITEM	PART NUMBER	QTY	DESCRIPTION	REV
	1001141815	Ref	DEUTZ TCD2.9L4 DIESEL ENGINE INSTALLATION - WITH REXROTH PUMPS AND STEEL HOODS (WITH COLD WEATHER PLUS PACKAGE)	M
1	0100011	AR	Compound, Locking	
2	0100079	AR	Sealant, Pipe	
4	0641408	10	Bolt 1/4 x 1	
5	0641410	4	Bolt 1/4 x 1-1/4	
6	0641511	1	Bolt 5/16 x 1-3/8	
7	0641605	3	Bolt 3/8 x 5/8	
8	0641606	4	Bolt 3/8 x 3/4	
9	0641608	1	Bolt 3/8 x 1	
10	0641610	1	Bolt 3/8 x 1-1/4	
12	0641612	2	Bolt 3/8 x 1-1/2	
13	0641808	1	Bolt 1/2 x 1	
14	0642010	1	Bolt 5/8 x 1-1/4	
16	0761210	1	Bolt M12 x 20	
17	1320187	1	Clamp	
18	1320190	1	Cover, Clamp	
19	1671121	1	Cover	
20	2180832	1	Fitting, Barbed	
22	2220313	2	Fitting, Elbow Barbed	
23	2750532	5 ft/ 1.5m	Hose	
24	1001154405	2 ft/ 0.6m	Hose	
26	3300220	2	Nut 5/16	
27	3311405	10	Nut 1/4	
28	3311605	2	Nut 3/8	
29	3422446	1	Pin, Pivot	
30	3841143	1	Pin, Keeper	
31	4240018	2	Strap, Tie (Not Shown)	
32	4711400	24	Washer 1/4	
33	4711600	12	Washer 3/8	
34	4752000	1	Washer 5/8	
36	4812100	1	Washer M12	
37	8405006	2	Clamp	
38	1001108617	1	Filter	
38	70002231	1	Element, Filter	
39	1001110425	4	Spacer	
40	1001116792	1	Clamp	
42	1001138491	NLA	Harness, Fuel (Use p/n 1001222665) (Not Shown - See Separate Breakdown in ELECTRICAL SECTION)	
46	1001140604	1	Panel, Rubber	
47	1001145089	1	Clamp	
48	1001141225	1	Battery Cable Kit	E
48A	7027042	1	Cable, Battery (Red) (Battery + to Relays and Starter)	
48B	7027043	1	Cable, Battery (Black) (Battery - to Tray Pivot Grd and Aux Pump)	
48C	7027044	1	Cable (Red) (Aux Relay to Aux Pump)	
48D	7027045	1	Cable, Battery (Black) (Engine to Tray Pivot Grd)	
50	1001141813	1	Engine Sub-Assembly (See Separate Breakdown in this Section)	
51	1320022	3	Clamp	

SECTION 3 - ENGINE

ITEM	PART NUMBER	QTY	DESCRIPTION	REV
52	1001145842	1	Plate, Clamping	
53	1001131542	1	Lanyard	
54	0641708	1	Bolt 7/16 x 1	
55	3311705	1	Nut 7/16	
56	4711700	2	Washer 7/16	
58	3520054	1	Plug	

FIGURE 3-25. DEUTZ TCD2.9L4 (EMR4) ENGINE INSTALLATION - WITH SAUER PUMPS AND ABS HOODS (WITHOUT COLD WEATHER PLUS PACKAGE)

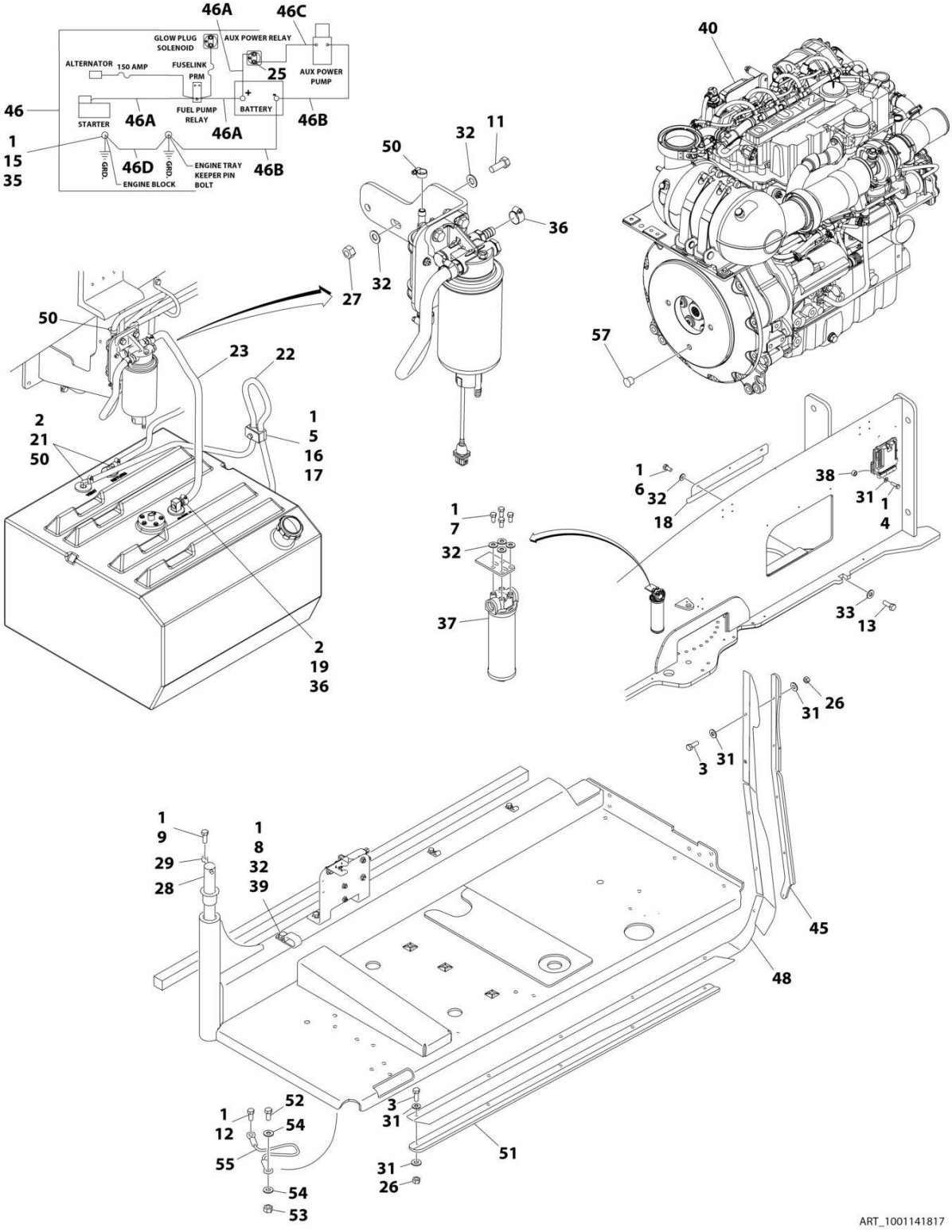

FIGURE 3-25. DEUTZ TCD2.9L4 (EMR4) ENGINE INSTALLATION - WITH SAUER PUMPS AND ABS HOODS (WITHOUT COLD WEATHER PLUS PACKAGE)

ITEM	PART NUMBER	QTY	DESCRIPTION	REV
	1001141817	Ref	DEUTZ TCD2.9L4 DIESEL ENGINE INSTALLATION - WITH SAUER PUMPS AND ABS HOODS (WITHOUT COLD WEATHER PLUS PACKAGE)	K
1	0100011	AR	Compound, Locking	
2	0100079	AR	Sealant, Pipe	
3	0641408	10	Bolt 1/4 x 1	
4	0641410	4	Bolt 1/4 x 1-1/4	
5	0641511	1	Bolt 5/16 x 1-3/8	
6	0641605	3	Bolt 3/8 x 5/8	
7	0641606	4	Bolt 3/8 x 3/4	
8	0641608	1	Bolt 3/8 x 1	
9	0641610	1	Bolt 3/8 x 1-1/4	
11	0641612	2	Bolt 3/8 x 1-1/2	
12	0641808	1	Bolt 1/2 x 1	
13	0642010	1	Bolt 5/8 x 1-1/4	
15	0761210	1	Bolt M12 x 20	
16	1320187	1	Clamp	
17	1320190	1	Cover, Clamp	
18	1671121	1	Cover	
19	2180832	1	Fitting, Barbed	
21	2220313	2	Fitting, Elbow Barbed	
22	2750532	5 ft/ 1.5m	Hose	
23	1001154405	2 ft/ 0.6m	Hose	
25	3300220	2	Nut 5/16	
26	3311405	10	Nut 1/4	
27	3311605	2	Nut 3/8	
28	3422446	1	Pin, Pivot	
29	3841143	1	Pin, Keeper	
30	4240018	2	Strap, Tie (Not Shown)	
31	4711400	24	Washer 1/4	
32	4711600	12	Washer 3/8	
33	4752000	1	Washer 5/8	
35	4812100	1	Washer M12	
36	8405006	2	Clamp	
37	1001108617	1	Filter	
37	70002231	1	Element, Filter	
38	1001110425	4	Spacer	
39	1001116792	1	Clamp	
40	1001134390	1	Engine Sub-Assembly (See Separate Breakdown in this Section)	
42	1001138491	NLA	Harness, Fuel (Use p/n 1001222665) (Not Shown - See Separate Breakdown in ELECTRICAL SECTION)	
45	1001145089	1	Clamp	
46	1001141225	1	Battery Cable Kit	E
46A	7027042	1	Cable, Battery (Red) (Battery + to Relays and Starter)	
46B	7027043	1	Cable, Battery (Black) (Battery - to Tray Pivot Grd and Aux Pump)	
46C	7027044	1	Cable (Red) (Aux Relay to Aux Pump)	
46D	7027045	1	Cable, Battery (Black) (Engine to Tray Pivot Grd)	
48	1001145560	1	Panel, Rubber	
50	1320022	3	Clamp	

SECTION 3 - ENGINE

ITEM	PART NUMBER	QTY	DESCRIPTION	REV
51	1001145842	1	Plate, Clamping	
52	0641708	1	Bolt 7/16 x 1	
53	3311705	1	Nut 7/16	
54	4711700	2	Washer 7/16	
55	1001131542	1	Lanyard	
57	3520054	1	Plug	

FIGURE 3-26. DEUTZ TCD2.9L4 (EMR4) ENGINE INSTALLATION - WITH SAUER PUMPS AND STEEL HOODS (WITHOUT COLD WEATHER PLUS PACKAGE)

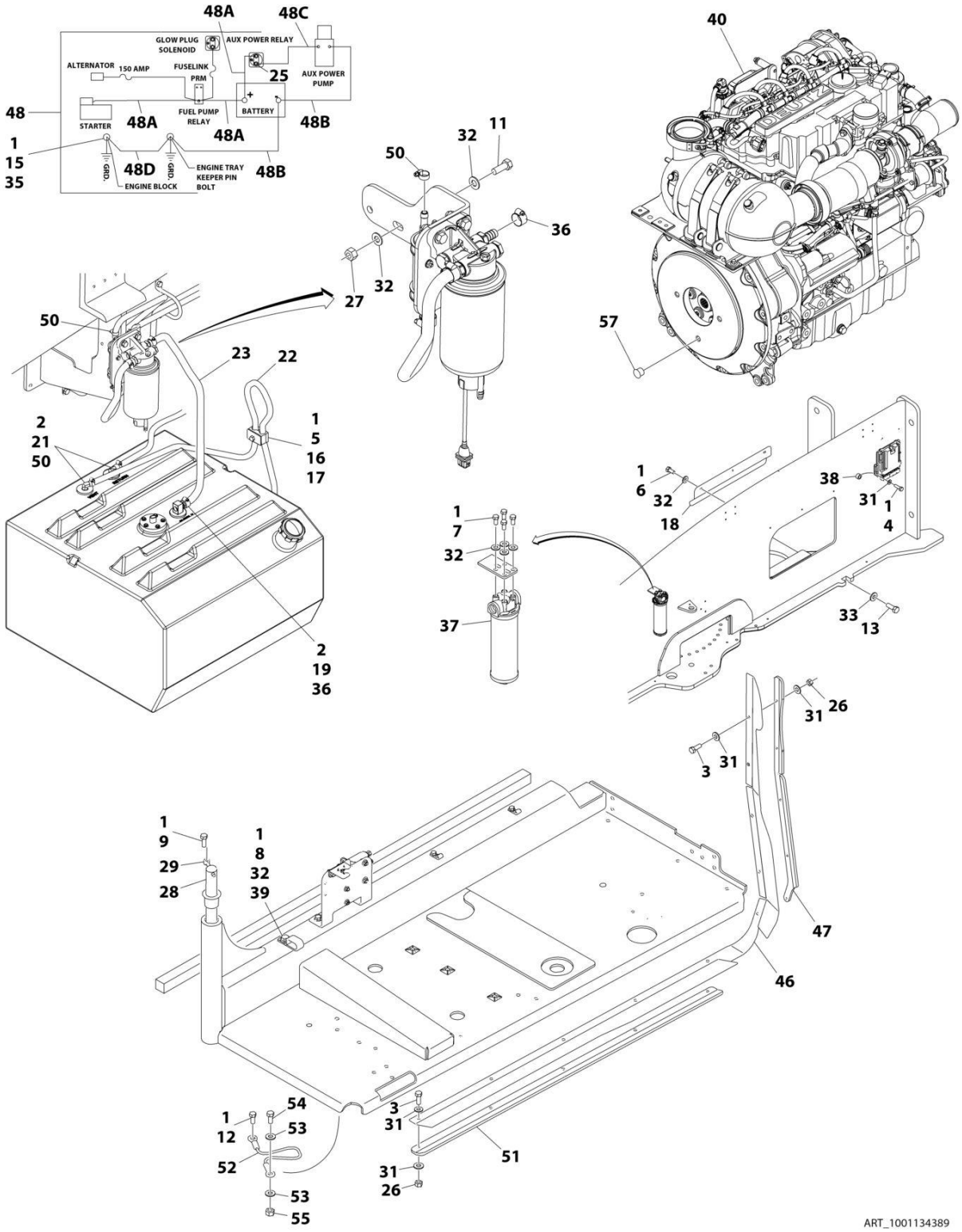

FIGURE 3-26. DEUTZ TCD2.9L4 (EMR4) ENGINE INSTALLATION - WITH SAUER PUMPS AND STEEL HOODS (WITHOUT COLD WEATHER PLUS PACKAGE)

ITEM	PART NUMBER	QTY	DESCRIPTION	REV
	1001134389	Ref	DEUTZ TCD2.9L4 DIESEL ENGINE INSTALLATION - WITH SAUER PUMPS AND STEEL HOODS (WITHOUT COLD WEATHER PLUS PACKAGE)	K
1	0100011	AR	Compound, Locking	
2	0100079	AR	Sealant, Pipe	
3	0641408	10	Bolt 1/4 x 1	
4	0641410	4	Bolt 1/4 x 1-1/4	
5	0641511	1	Bolt 5/16 x 1-3/8	
6	0641605	3	Bolt 3/8 x 5/8	
7	0641606	4	Bolt 3/8 x 3/4	
8	0641608	1	Bolt 3/8 x 1	
9	0641610	1	Bolt 3/8 x 1-1/4	
11	0641612	2	Bolt 3/8 x 1-1/2	
12	0641808	1	Bolt 1/2 x 1	
13	0642010	1	Bolt 5/8 x 1-1/4	
15	0761210	1	Bolt M12 x 20	
16	1320187	1	Clamp	
17	1320190	1	Cover, Clamp	
18	1671121	1	Cover	
19	2180832	1	Fitting, Barbed	
21	2220313	2	Fitting, Elbow Barbed	
22	2750532	5 ft/ 1.5m	Hose	
23	1001154405	2 ft/ 0.6m	Hose	
25	3300220	2	Nut 5/16	
26	3311405	10	Nut 1/4	
27	3311605	2	Nut 3/8	
28	3422446	1	Pin, Pivot	
29	3841143	1	Pin, Keeper	
30	4240018	2	Strap, Tie (Not Shown)	
31	4711400	24	Washer 1/4	
32	4711600	12	Washer 3/8	
33	4752000	1	Washer 5/8	
35	4812100	1	Washer M12	
36	8405006	2	Clamp	
37	1001108617	1	Filter	
37	70002231	1	Element, Filter	
38	1001110425	4	Spacer	
39	1001116792	1	Clamp	
40	1001134390	1	Engine Sub-Assembly (See Separate Breakdown in this Section)	
42	1001138491	NLA	Harness, Fuel (Use p/n 1001222665) (Not Shown - See Separate Breakdown in ELECTRICAL SECTION)	
46	1001140604	1	Panel, Rubber	
47	1001145089	1	Clamp	
48	1001141225	1	Battery Cable Kit	E
48A	7027042	1	Cable, Battery (Red) (Battery + to Relays and Starter)	
48B	7027043	1	Cable, Battery (Black) (Battery - to Tray Pivot Grd and Aux Pump)	
48C	7027044	1	Cable (Red) (Aux Relay to Aux Pump)	
48D	7027045	1	Cable, Battery (Black) (Engine to Tray Pivot Grd)	
50	1320022	3	Clamp	

SECTION 3 - ENGINE

ITEM	PART NUMBER	QTY	DESCRIPTION	REV
51	1001145842	1	Plate, Clamping	
52	1001131542	1	Lanyard	
53	4711700	2	Washer 7/16	
54	0641708	1	Bolt 7/16 x 1	
55	3311705	1	Nut 7/16	
57	3520054	1	Plug	

SECTION 3 - ENGINE

FIGURE 3-27. DEUTZ TCD2.9L4 (EMR4) ENGINE INSTALLATION - WITH SAUER PUMPS AND STEEL HOODS (WITH COLD WEATHER PLUS PACKAGE)

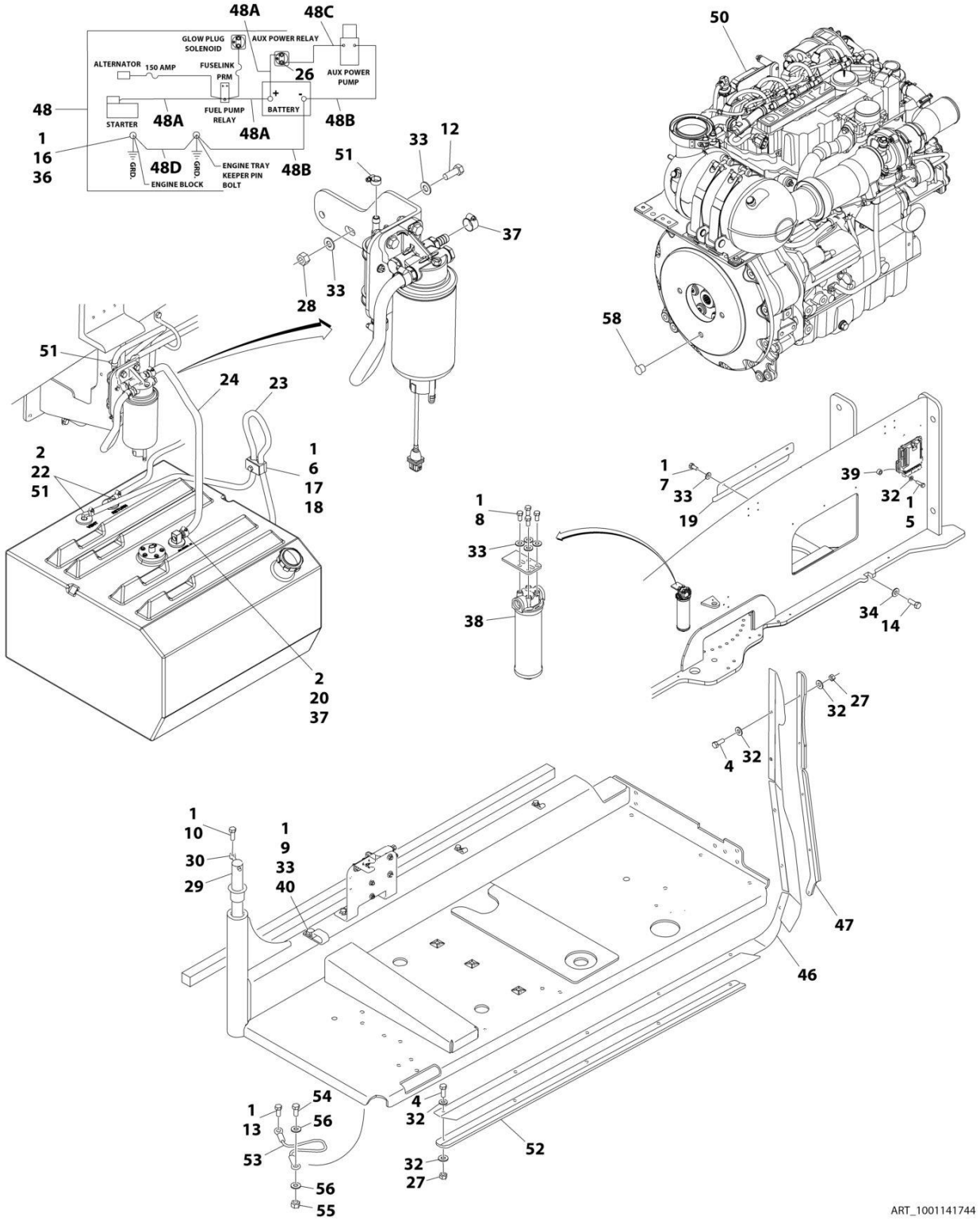

FIGURE 3-27. DEUTZ TCD2.9L4 (EMR4) ENGINE INSTALLATION - WITH SAUER PUMPS AND STEEL HOODS (WITH COLD WEATHER PLUS PACKAGE)

ITEM	PART NUMBER	QTY	DESCRIPTION	REV
	1001141744	Ref	DEUTZ TCD2.9L4 DIESEL ENGINE INSTALLATION - WITH SAUER PUMPS AND STEEL HOODS (WITH COLD WEATHER PLUS PACKAGE)	M
1	0100011	AR	Compound, Locking	
2	0100079	AR	Sealant, Pipe	
4	0641408	10	Bolt 1/4 x 1	
5	0641410	4	Bolt 1/4 x 1-1/4	
6	0641511	1	Bolt 5/16 x 1-3/8	
7	0641605	3	Bolt 3/8 x 5/8	
8	0641606	4	Bolt 3/8 x 3/4	
9	0641608	1	Bolt 3/8 x 1	
10	0641610	1	Bolt 3/8 x 1-1/4	
12	0641612	2	Bolt 3/8 x 1-1/2	
13	0641808	1	Bolt 1/2 x 1	
14	0642010	1	Bolt 5/8 x 1-1/4	
16	0761210	1	Bolt M12 x 20	
17	1320187	1	Clamp	
18	1320190	1	Cover, Clamp	
19	1671121	1	Cover	
20	2180832	1	Fitting, Barbed	
22	2220313	2	Fitting, Elbow Barbed	
23	2750532	5 ft/ 1.5m	Hose	
24	1001154405	2 ft/ 0.6m	Hose	
26	3300220	2	Nut 5/16	
27	3311405	10	Nut 1/4	
28	3311605	2	Nut 3/8	
29	3422446	1	Pin, Pivot	
30	3841143	1	Pin, Keeper	
31	4240018	2	Strap, Tie (Not Shown)	
32	4711400	24	Washer 1/4	
33	4711600	12	Washer 3/8	
34	4752000	1	Washer 5/8	
36	4812100	1	Washer M12	
37	8405006	2	Clamp	
38	1001108617	1	Filter	
38	70002231	1	Element, Filter	
39	1001110425	4	Spacer	
40	1001116792	1	Clamp	
42	1001138491	NLA	Harness, Fuel (Use p/n 1001222665) (Not Shown - See Separate Breakdown in ELECTRICAL SECTION)	
46	1001140604	1	Panel, Rubber	
47	1001145089	1	Clamp	
48	1001141225	1	Battery Cable Kit	E
48A	7027042	1	Cable, Battery (Red) (Battery + to Relays and Starter)	
48B	7027043	1	Cable, Battery (Black) (Battery - to Tray Pivot Grd and Aux Pump)	
48C	7027044	1	Cable (Red) (Aux Relay to Aux Pump)	
48D	7027045	1	Cable, Battery (Black) (Engine to Tray Pivot Grd)	
50	1001141745	1	Engine Sub-Assembly (See Separate Breakdown in this Section)	
51	1320022	3	Clamp	

SECTION 3 - ENGINE

ITEM	PART NUMBER	QTY	DESCRIPTION	REV
52	1001145842	1	Plate, Clamping	
53	1001131542	1	Lanyard	
54	0641708	1	Bolt 7/16 x 1	
55	3311705	1	Nut 7/16	
56	4711700	2	Washer 7/16	
58	3520054	1	Plug	

FIGURE 3-28. DEUTZ TCD2.9L4 (EMR4) ENGINE INSTALLATION - WITH PMP PUMP AND ABS HOODS (WITHOUT COLD WEATHER PLUS PACKAGE)

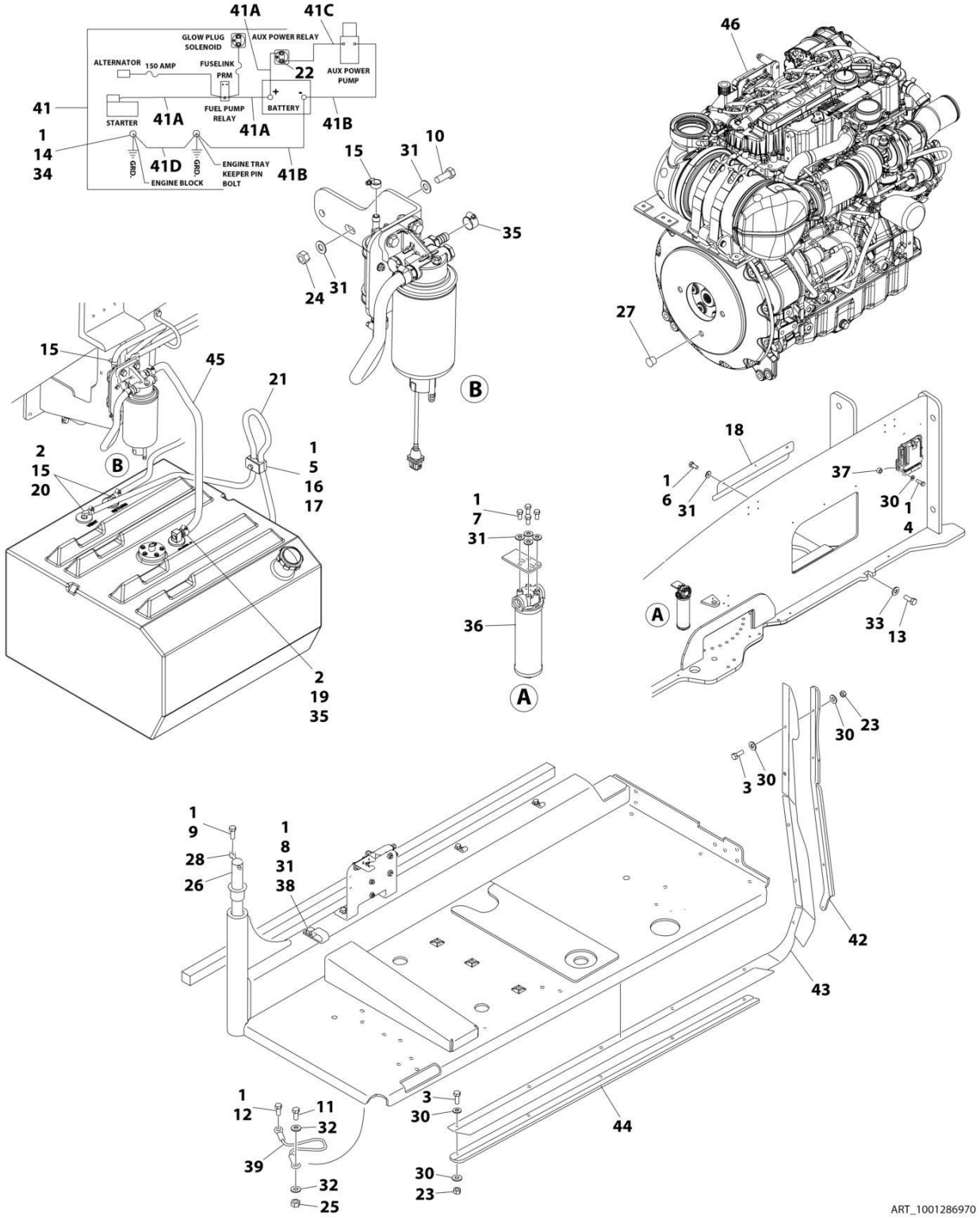

FIGURE 3-28. DEUTZ TCD2.9L4 (EMR4) ENGINE INSTALLATION - WITH PMP PUMP AND ABS HOODS (WITHOUT COLD WEATHER PLUS PACKAGE)

ITEM	PART NUMBER	QTY	DESCRIPTION	REV
	1001286970	Ref	DEUTZ D2.9L4 - ENGINE INSTALLATION WITH PMP PUMPS AND ABS HOODS (WITHOUT COLD WEATHER PLUS PACKAGE)	A
1	0100011	AR	Compound, Locking	
2	0100079	AR	Sealant, Pipe	
3	0641408	10	Bolt 1/4 x 1	
4	0641410	4	Bolt 1/4 x 1-1/4	
5	0641511	1	Bolt 5/16 x 1-3/8	
6	0641605	3	Bolt 3/8 x 5/8	
7	0641606	4	Bolt 3/8 x 3/4	
8	0641608	1	Bolt 3/8 x 1	
9	0641610	1	Bolt 3/8 x 1-1/4	
10	0641612	2	Bolt 3/8 x 1-1/2	
11	0641708	1	Bolt 7/16 x 1	
12	0641808	1	Bolt 1/2 x 1	
13	0642010	1	Bolt 5/8 x 1-1/4	
14	0761210	1	Bolt M12 x 20	
15	1320022	3	Clamp	
16	1320187	1	Clamp	
17	1320190	1	Clamp	
18	1671121	1	Cover	
19	2180832	1	Fitting, Barbed	
20	2220313	2	Fitting, 90 NPTF/Barbed	
21	2750532	5 ft /1.6 m	Hose	
22	3300220	2	Nut	
23	3311405	10	Nut 1/4	
24	3311605	2	Nut 3/8	
25	3311705	1	Nut 7/16	
26	3422446	1	Pin	
27	3520054	1	Plug	
28	3841143	1	Keeper, Pin	
29	4240018	AR	Tie-Strap (Not Shown)	
30	4711400	24	Washer 1/4	
31	4711600	12	Washer 3/8	
32	4711700	2	Washer 7/16	
33	4752000	1	Washer 5/8	
34	4812100	1	Washer M12	
35	8405006	2	Clamp	
36	1001108617	1	Filter	
36	70002231	1	Element, Filter	
37	1001110425	4	Spacer	
38	1001116792	1	Clamp	
39	1001131542	1	Lanyard	
40	1001138491	1	Harness, Fuel (Not Shown) (See Separate Breakdown in ELECTRICAL Section)	
41	1001141225	1	Battery Cable Kit	
41A	7027042	1	Cable, Battery (Red) (Battery + to Relays and Starter)	
41B	7027043	1	Cable, Battery (Black) (Battery - to Tray Pivot Grd and Aux Pump)	
41C	7027044	1	Cable (Red) (Aux Relay to Aux Pump)	

SECTION 3 - ENGINE

ITEM	PART NUMBER	QTY	DESCRIPTION	REV
41D	7027045	1	Cable, Battery (Black) (Engine to Tray Pivot Grd)	
42	1001145089	1	Clamp	
43	1001145560	1	Panel	
44	1001145842	1	Plate	
45	1001154405	2 ft /0.6 m	Hose	
46	1001286967	1	Engine Sub-Assembly (See Separate Breakdown in this Section)	

FIGURE 3-29. DEUTZ D2.9L4 - (EMR4) ENGINE INSTALLATION WITH PMP PUMP AND STEEL HOODS (WITHOUT COLD WEATHER PLUS PACKAGE)

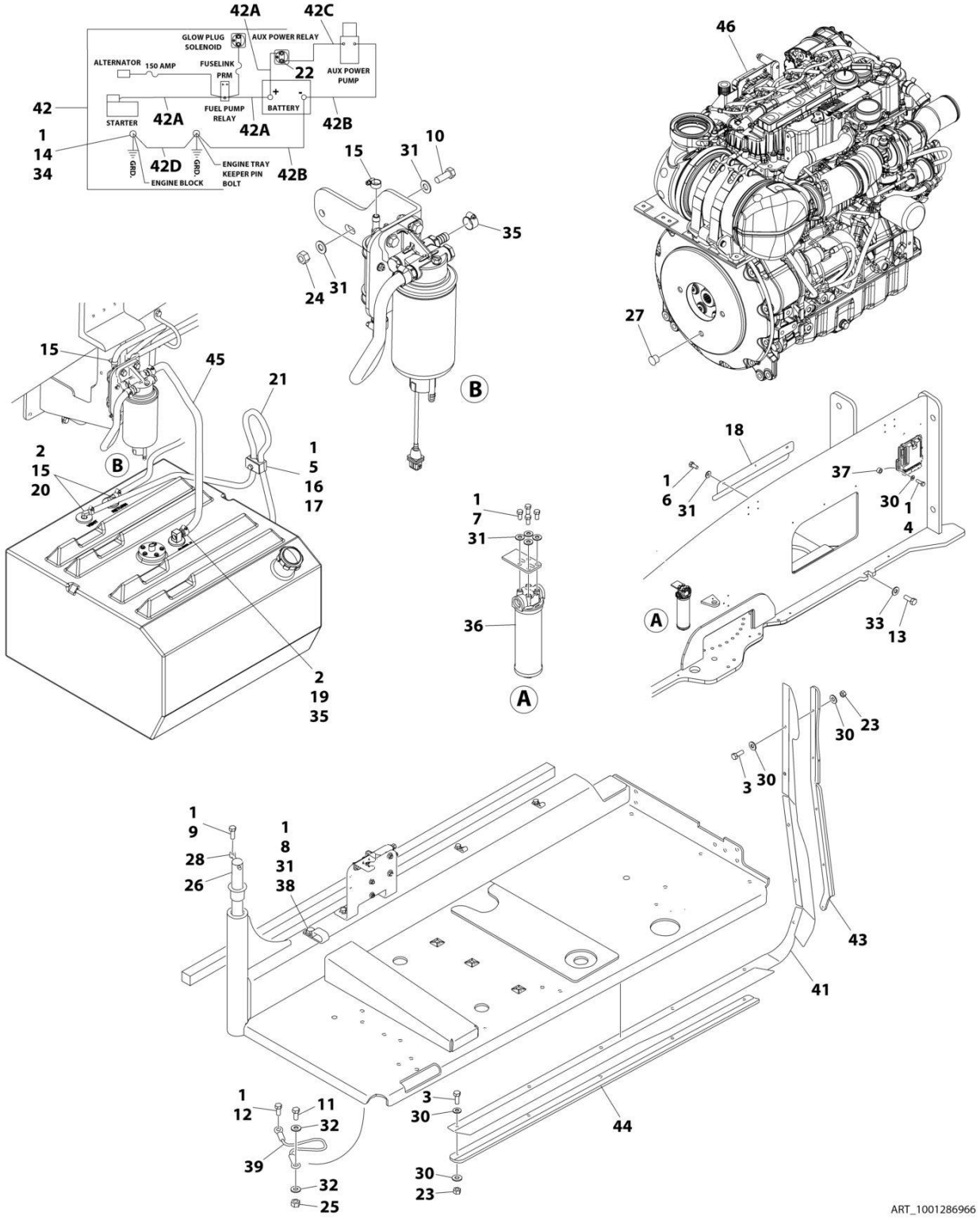

FIGURE 3-29. DEUTZ D2.9L4 - (EMR4) ENGINE INSTALLATION WITH PMP PUMP AND STEEL HOODS (WITHOUT COLD WEATHER PLUS PACKAGE)

ITEM	PART NUMBER	QTY	DESCRIPTION	REV
	1001286966	Ref	ENGINE INSTALLATION WITH PMP PUMPS AND STEEL HOODS WITHOUT COLD WEATHER PLUS PACKAGE	A
1	0100011	AR	Compound, Locking	
2	0100079	AR	Sealant, Pipe	
3	0641408	10	Bolt 1/4 x 1	
4	0641410	4	Bolt 1/4 x 1-1/4	
5	0641511	1	Bolt 5/16 x 1-3/8	
6	0641605	3	Bolt 3/8 x 5/8	
7	0641606	4	Bolt 3/8 x 3/4	
8	0641608	1	Bolt 3/8 x 1	
9	0641610	1	Bolt 3/8 x 1-1/4	
10	0641612	2	Bolt 3/8 x 1-1/2	
11	0641708	1	Bolt 7/16 x 1	
12	0641808	1	Bolt 1/2 x 1	
13	0642010	1	Bolt 5/8 x 1-1/4	
14	0761210	1	Bolt M12 x 20	
15	1320022	3	Clamp	
16	1320187	1	Clamp	
17	1320190	1	Clamp	
18	1671121	1	Cover	
19	2180832	1	Fitting, Barbed	
20	2220313	2	Fitting, 90 NPTF/Barbed	
21	2750532	5 ft /1.6 m	Hose	
22	3300220	2	Nut	
23	3311405	10	Nut 1/4	
24	3311605	2	Nut 3/8	
25	3311705	1	Nut 7/16	
26	3422446	1	Pin	
27	3520054	1	Plug	
28	3841143	1	Keeper, Pin	
29	4240018	AR	Tie-Strap (Not Shown)	
30	4711400	24	Washer 1/4	
31	4711600	12	Washer 3/8	
32	4711700	2	Washer 7/16	
33	4752000	1	Washer 5/8	
34	4812100	1	Washer M12	
35	8405006	2	Clamp	
36	1001108617	1	Filter	
36	70002231	1	Element, Filter	
37	1001110425	4	Spacer	
38	1001116792	1	Clamp	
39	1001131542	1	Lanyard	
40	1001138491	1	Harness, Fuel (Not Shown) (See Separate Breakdown in ELECTRICAL SECTION)	
41	1001140604	1	Panel	
42	1001141225	1	Battery Cable Kit	
42A	7027042	1	Cable, Battery (Red) (Battery + to Relays and Starter)	
42B	7027043	1	Cable, Battery (Black) (Battery - to Tray Pivot Grd and Aux Pump)	

SECTION 3 - ENGINE

ITEM	PART NUMBER	QTY	DESCRIPTION	REV
42C	7027044	1	Cable (Red) (Aux Relay to Aux Pump)	
42D	7027045	1	Cable, Battery (Black) (Engine to Tray Pivot Grd)	
43	1001145089	1	Clamp	
44	1001145842	1	Plate	
45	1001154405	2 ft /0.6 m	Hose	
46	1001286967	1	Engine Sub-Assembly (See Separate Breakdown in this Section)	

FIGURE 3-30. DEUTZ TCD2.9L4 (EMR4) ENGINE SUB-ASSEMBLY - WITH REXROTH PUMP (WITHOUT COLD WEATHER PLUS PACKAGE)

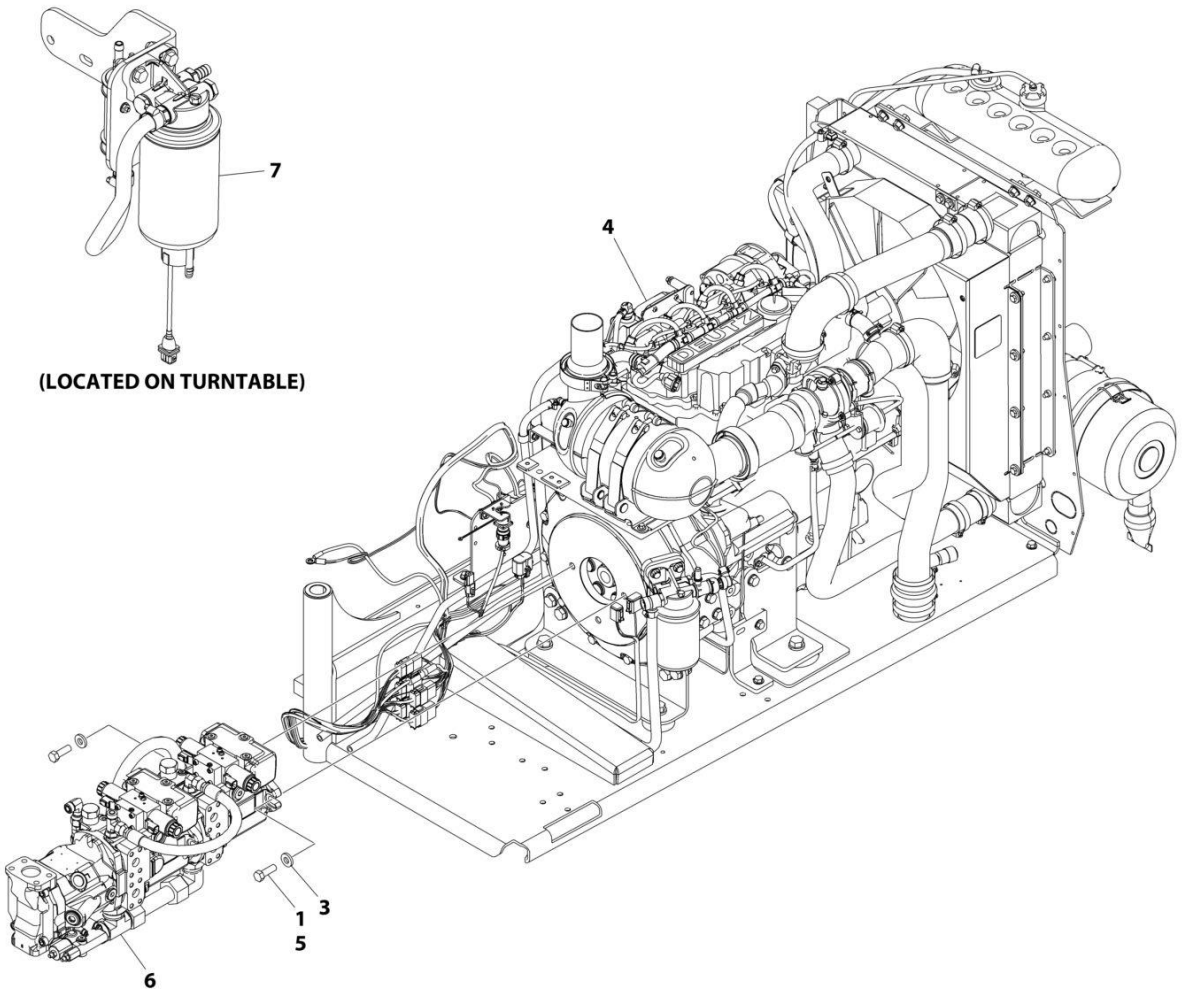

FIGURE 3-30. DEUTZ TCD2.9L4 (EMR4) ENGINE SUB-ASSEMBLY - WITH REXROTH PUMP (WITHOUT COLD WEATHER PLUS PACKAGE)

ITEM	PART NUMBER	QTY	DESCRIPTION	REV
	1001141812	Ref	DEUTZ TCD2.9L4 ENGINE SUB-ASSEMBLY	AO
1	0641812	2	Bolt 1/2 x 1-1/2	
1	0641814	2	Bolt 1/2 x 1-3/4	
3	4891800	2	Washer 1/2	
4	1001134392	1	Engine Assembly (See Separate Breakdown in this Section)	
5	0100011	AR	Compound, Locking	
6	1001152963	1	Pump Assembly - Rexroth (See Separate Breakdown in this Section)	
7	1001165101	1	Bracket, Fuel Pump Filter Assembly (See Separate Breakdown in this Section)	

FIGURE 3-31. DEUTZ TCD2.9L4 (EMR4) ENGINE SUB-ASSEMBLY - WITH REXROTH PUMP (WITH COLD WEATHER PLUS PACKAGE)

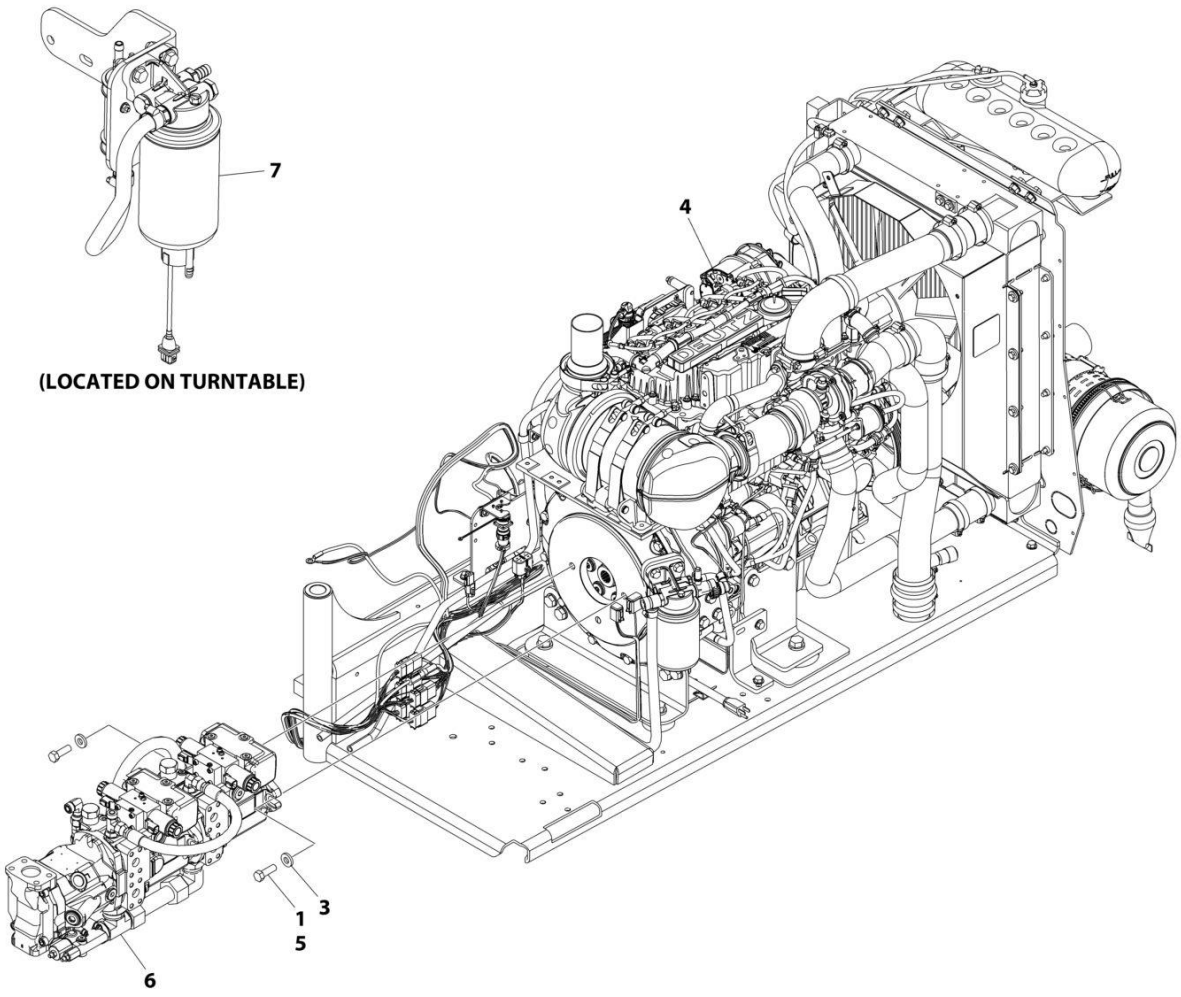

FIGURE 3-31. DEUTZ TCD2.9L4 (EMR4) ENGINE SUB-ASSEMBLY - WITH REXROTH PUMP (WITH COLD WEATHER PLUS PACKAGE)

ITEM	PART NUMBER	QTY	DESCRIPTION	REV
	1001141813	Ref	DEUTZ TCD2.9L4 ENGINE SUB-ASSEMBLY	AP
1	0641812	2	Bolt 1/2 x 1-1/2	
1	0641814	2	Bolt 1/2 x 1-1/2	
3	4740171	2	Washer 1/2	
4	1001141746	1	Engine Assembly (See Separate Breakdown in this Section)	
5	0100011	AR	Compound, Locking	
6	1001152963	1	Pump Assembly - Rexroth (See Separate Breakdown in this Section)	
7	1001165101	1	Bracket, Fuel Pump Filter Assembly (See Separate Breakdown in this Section)	

FIGURE 3-32. DEUTZ TCD2.9L4 (EMR4) ENGINE SUB-ASSEMBLY - WITH SAUER PUMP (WITHOUT COLD WEATHER PLUS PACKAGE)

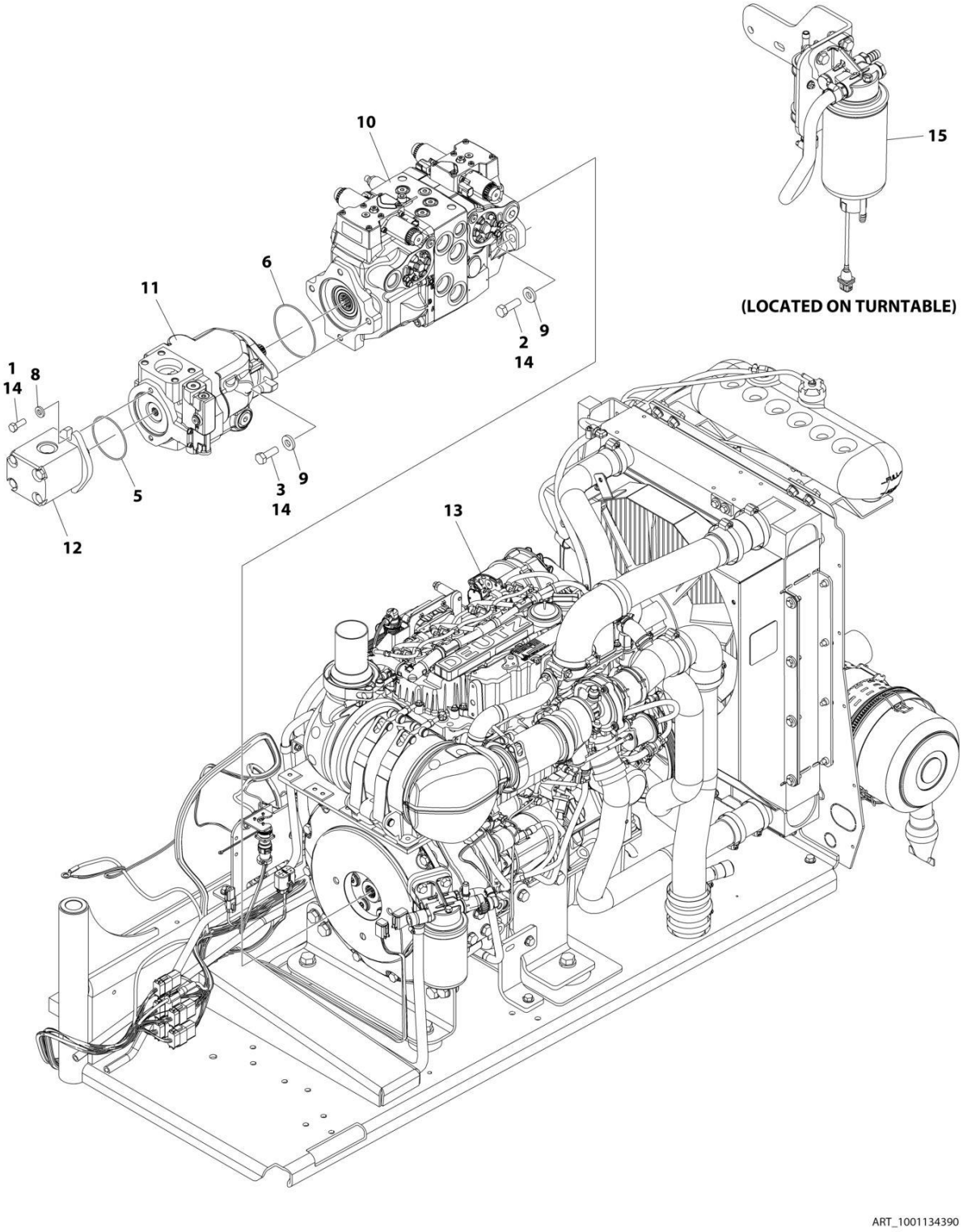

FIGURE 3-32. DEUTZ TCD2.9L4 (EMR4) ENGINE SUB-ASSEMBLY - WITH SAUER PUMP (WITHOUT COLD WEATHER PLUS PACKAGE)

ITEM	PART NUMBER	QTY	DESCRIPTION	REV
	1001134390	Ref	DEUTZ TCD2.9L4 ENGINE SUB-ASSEMBLY	AM
1	0641608	2	Bolt 3/8 x 1	
2	0641812	2	Bolt 1/2 x 1-1/2	
2	0641814	2	Bolt 1/2 x 1-3/4	
3	0761215	2	Bolt M12 x 35	
5	3790152	1	O-Ring	
6	3790155	1	O-Ring	
8	4891600	2	Washer 3/8	
9	4891800	4	Washer 1/2	
10	1001108616	1	Pump Assembly - Sauer Tandem (See Separate Breakdown in this Section)	
11	1001171095	1	Pump Assembly - Sauer Piston (See Separate Breakdown in this Section)	
12	1001112927	1	Pump Assembly - Sauer Gear (See Separate Breakdown in this Section)	
13	1001134392	1	Engine Assembly (See Separate Breakdown in this Section)	
14	0100011	AR	Compound, Locking	
15	1001165101	1	Bracket, Fuel Pump Filter Assembly (See Separate Breakdown in this Section)	

FIGURE 3-33. DEUTZ TCD2.9L4 (EMR4) ENGINE SUB-ASSEMBLY - WITH SAUER PUMPS (WITH COLD WEATHER PLUS PACKAGE)

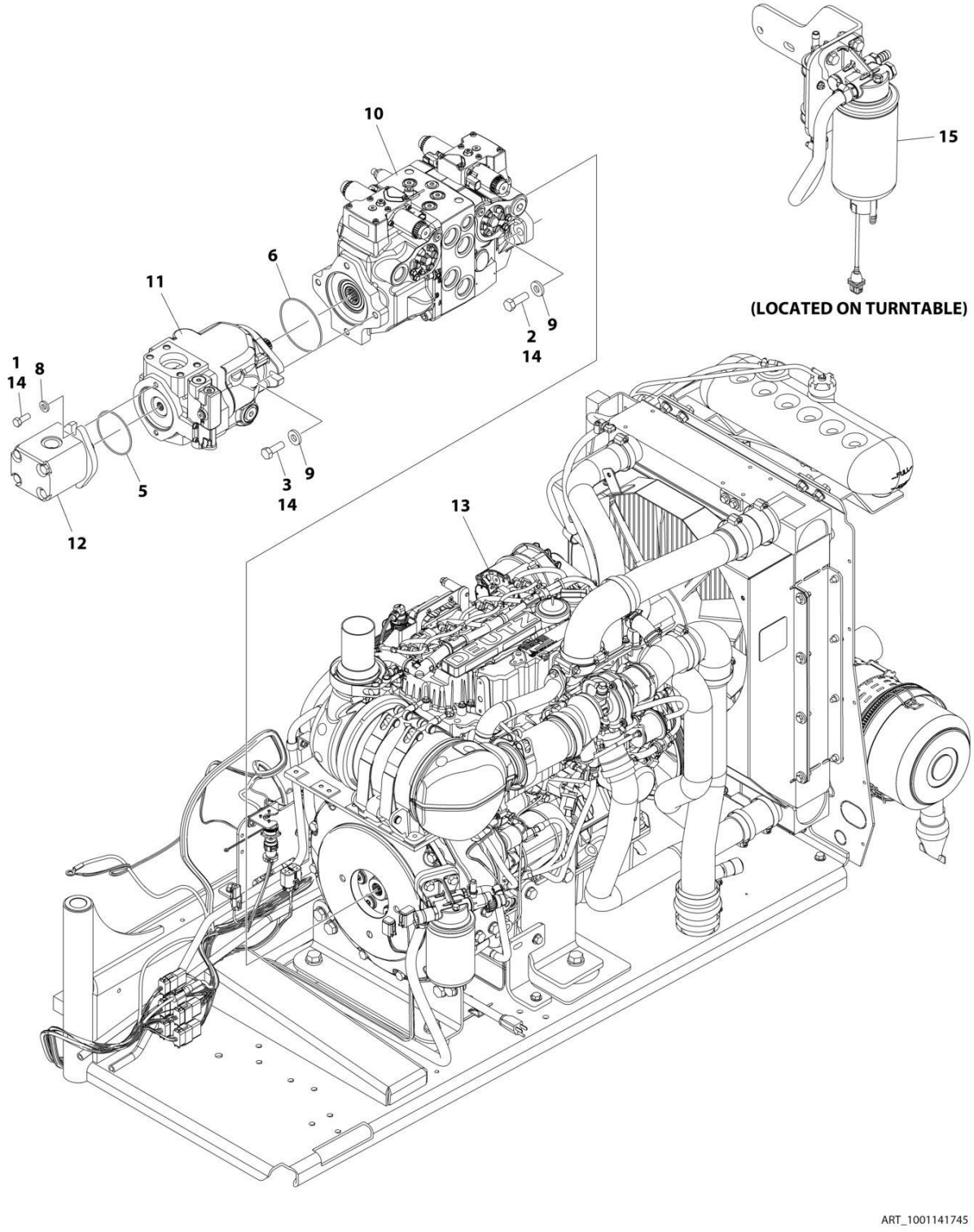

FIGURE 3-33. DEUTZ TCD2.9L4 (EMR4) ENGINE SUB-ASSEMBLY - WITH SAUER PUMPS (WITH COLD WEATHER PLUS PACKAGE)

ITEM	PART NUMBER	QTY	DESCRIPTION	REV
	1001141745	Ref	DEUTZ TCD2.9L4 ENGINE SUB-ASSEMBLY	AL
1	0641608	2	Bolt 3/8 x 1	
2	0641812	2	Bolt 1/2 x 1-1/2	
2	0641814	2	Bolt 1/2 x 1-3/4	
3	0761215	2	Bolt M12 x 35	
5	3790152	1	O-Ring	
6	3790155	1	O-Ring	
8	4891600	2	Washer 3/8	
9	4891800	4	Washer 1/2	
10	1001108616	1	Pump Assembly - Sauer Tandem (See Separate Breakdown in this Section)	
11	1001171095	1	Pump Assembly - Sauer Piston (See Separate Breakdown in this Section)	
12	1001112927	1	Pump Assembly - Sauer Gear (See Separate Breakdown in this Section)	
13	1001141746	1	Engine Assembly (See Separate Breakdown in this Section)	
14	0100011	AR	Compound, Locking	
15	1001165101	1	Bracket, Fuel Pump Filter Assembly (See Separate Breakdown in this Section)	

FIGURE 3-34. DEUTZ D2.9L4 (EMR4) ENGINE SUB-ASSEMBLY WITH PMP PUMP AND ABS HOODS (WITHOUT COLD WEATHER PLUS PACKAGE)

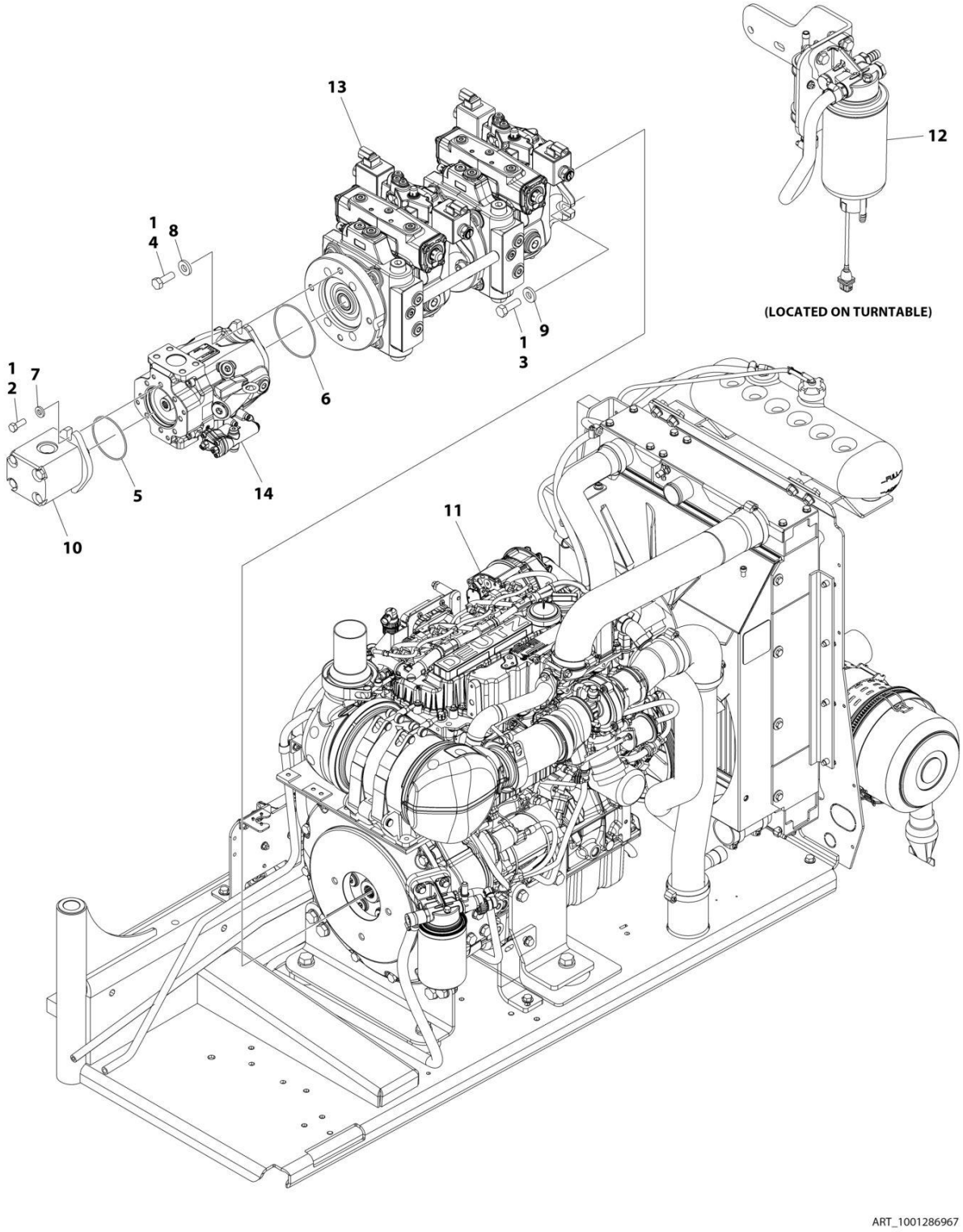

FIGURE 3-34. DEUTZ D2.9L4 (EMR4) ENGINE SUB-ASSEMBLY WITH PMP PUMP AND ABS HOODS (WITHOUT COLD WEATHER PLUS PACKAGE)

ITEM	PART NUMBER	QTY	DESCRIPTION	REV
	1001286967	Ref	ENGINE SUB-ASSEMBLY WITH PMP PUMPS AND ABS HOODS (WITHOUT COLD WEATHER PLUS PACKAGE)	B
1	0100011	AR	Compound, Locking	
2	0641608	2	Bolt 3/8 x 1	
3	0641812	2	Bolt 1/2 x 1-1/2	
4	0761215	2	Bolt M12 x 35	
5	3790152	1	O-Ring	
6	3790155	1	O-Ring	
7	4891600	2	Washer 3/8	
8	4891800	2	Washer 1/2	
9	8310056	2	Washer	
10	1001112927	1	Pump Assembly - Sauer Gear (See Separate Breakdown in this Section)	
11	1001134392	1	Engine Assembly (See Separate Breakdown in this Section)	
12	1001165101	1	Bracket, Fuel Pump Filter Assembly (See Separate Breakdown in this Section)	
13	1001286957	1	Pump Assembly - Hydraulic Tandem (See Separate Breakdown in this Section)	
14	1001286958	1	Pump Assembly - Hydraulic Piston (See Separate Breakdown in this Section)	

FIGURE 3-35. DEUTZ D2.9L4 (EMR4) ENGINE SUB-ASSEMBLY WITH PMP PUMP AND STEEL HOODS (WITH COLD WEATHER PLUS PACKAGE)

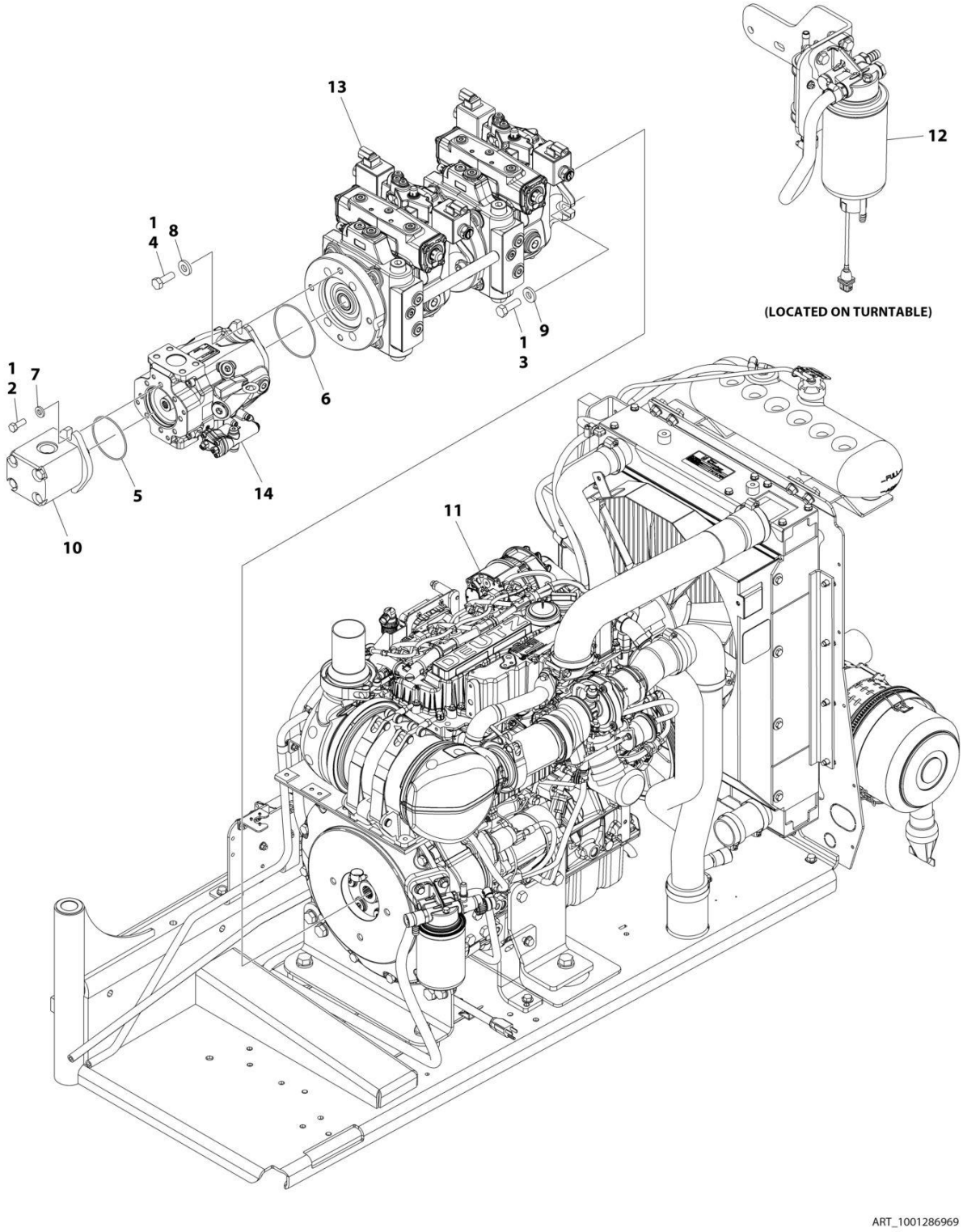

FIGURE 3-35. DEUTZ D2.9L4 (EMR4) ENGINE SUB-ASSEMBLY WITH PMP PUMP AND STEEL HOODS (WITH COLD WEATHER PLUS PACKAGE)

ITEM	PART NUMBER	QTY	DESCRIPTION	REV
	1001286969	Ref	ENGINE SUB-ASSEMBLY WITH PMP PUMPS AND STEEL HOODS (WITH COLD WEATHER PLUS PACKAGE)	B
1	0100011	AR	Compound, Locking	
2	0641608	2	Bolt 3/8 x 1	
3	0641812	2	Bolt 1/2 x 1-1/2	
4	0761215	2	Bolt M12 x 35	
5	3790152	1	O-Ring	
6	3790155	1	O-Ring	
7	4891600	2	Washer 3/8	
8	4891800	2	Washer 1/2	
9	8310056	2	Washer	
10	1001112927	1	Pump Assembly - Sauer Gear (See Separate Breakdown in this Section)	
11	1001141746	1	Engine Assembly (See Separate Breakdown in this Section)	
12	1001165101	1	Bracket, Fuel Pump Filter Assembly (See Separate Breakdown in this Section)	
13	1001286957	1	Pump Assembly - Hydraulic Tandem (See Separate Breakdown in this Section)	
14	1001286958	1	Pump Assembly - Hydraulic Piston (See Separate Breakdown in this Section)	

FIGURE 3-36. DEUTZ TCD2.9L4 (EMR4) ENGINE ASSEMBLY (WITHOUT COLD WEATHER PLUS PACKAGE)

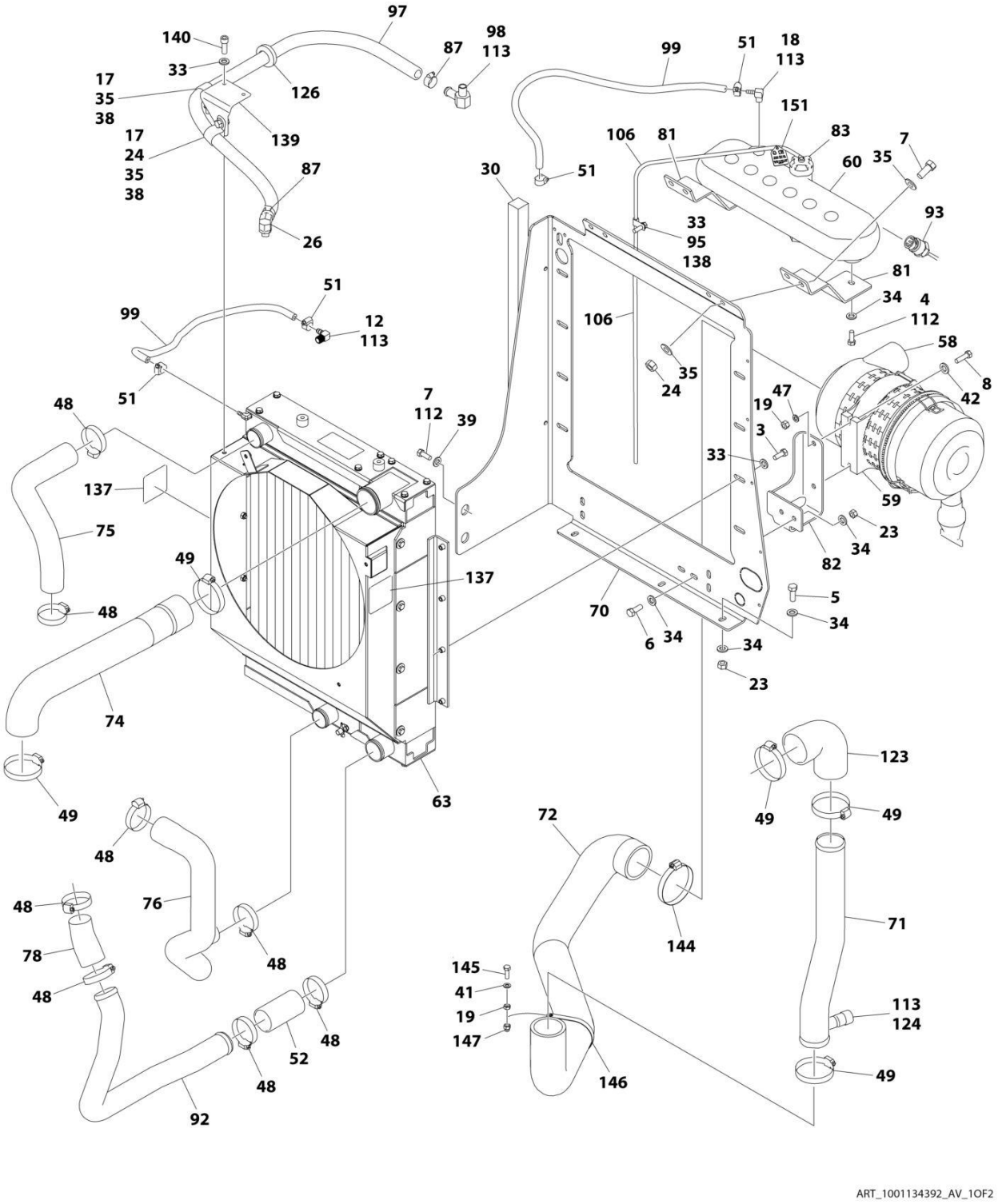

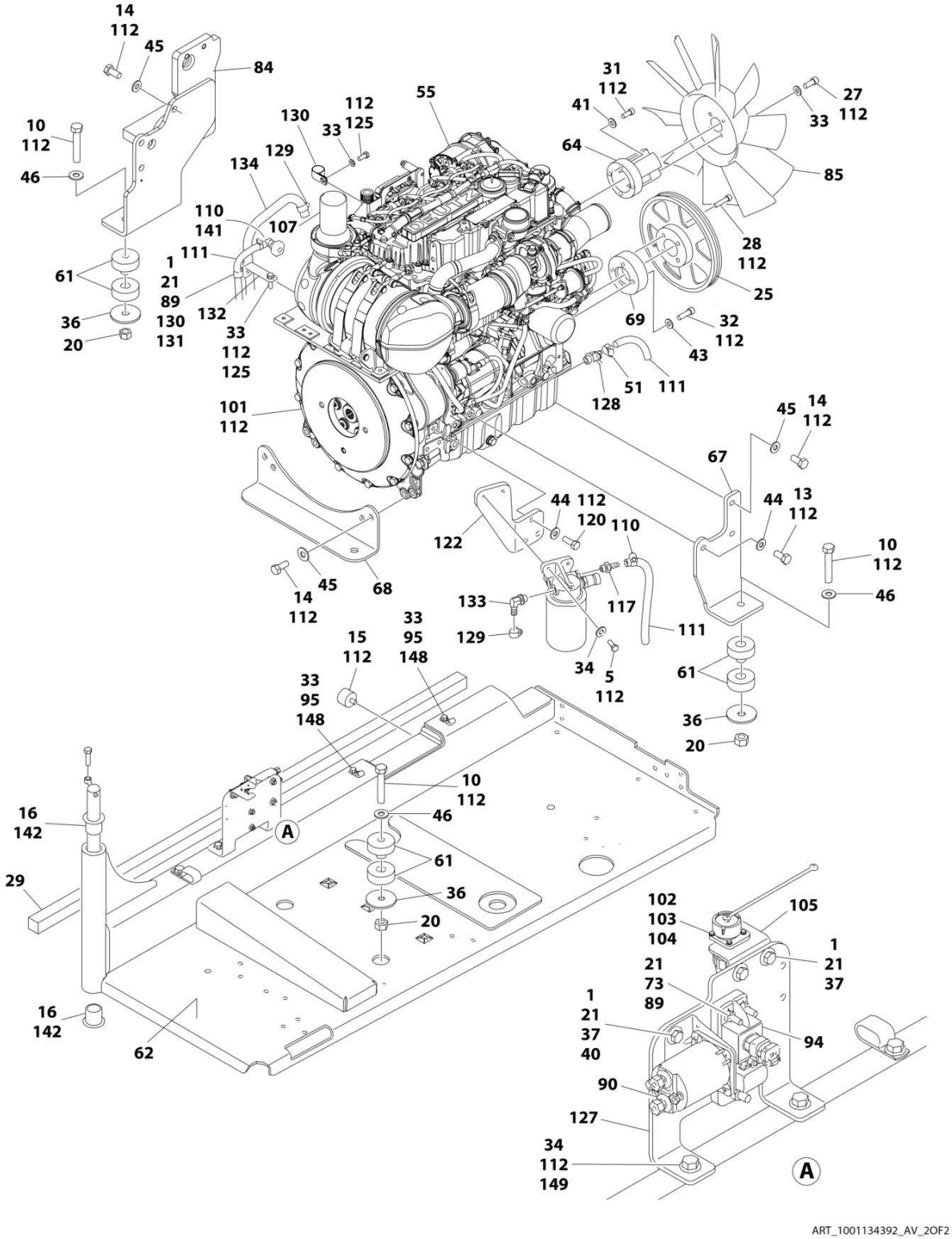

ART_1001134392_AV_2OF2

FIGURE 3-36. DEUTZ TCD2.9L4 (EMR4) ENGINE ASSEMBLY (WITHOUT COLD WEATHER PLUS PACKAGE)

ITEM	PART NUMBER	QTY	DESCRIPTION	REV
	1001134392	Ref	DEUTZ TCD2.9L4 ENGINE ASSEMBLY	AV
1	0641406	5	Bolt 1/4 x 3/4	
3	0641508	8	Bolt 5/16 x 1	
4	0641606	2	Bolt 3/8 x 3/4	
5	0641608	9	Bolt 3/8 x 1	
6	0641610	2	Bolt 3/8 x 1-1/4	
7	0641708	6	Bolt 7/16 x 1	
8	0700815	2	Bolt M8 x 35	
10	0682028	4	Bolt 5/8 x 3-1/2 Grade 8	
12	1001140564	1	Fitting, 90 Barbed	
13	0771212	1	Bolt M12 x 25 Grade 10.9	
14	0771414	9	Bolt M14 x 30 Grade 10.9	
15	0940070	1	Bumper	
16	0961986	2	Bushing, Flanged	
17	0641706	2	Bolt 7/16 x 3/4	
18	1001134488	1	Fitting, 90 Barbed	
19	3290801	3	Nut M8	
20	3272001	4	Nut 5/8 Grade 8	
21	3311405	6	Nut 1/4	
23	3311605	9	Nut 3/8	
24	3311705	5	Nut 7/16	
25	3580320	1	Pulley	
26	1001141719	1	Fitting, 90 Barbed	
27	3931512	4	Capscrew 5/16 x 3/4	
28	3931628	4	Capscrew 3/8 x 1-3/4	
29	3960543	1	Seal	
30	3960544	1	Seal	
31	4031914	4	Bolt M8 x 50	
32	4032014	4	Bolt M10 x 50	
33	4711500	19	Washer 5/16	
34	4711600	24	Washer 3/8	
35	4711700	10	Washer 7/16	
36	1001146219	4	Washer Special	
37	4751400	8	Washer 1/4	
38	8406302	2	Clamp	
39	4751700	2	Washer 7/16	
40	4791400	2	Starwasher 1/4	
41	4811900	5	Washer M8	
42	4811902	2	Washer M8	
43	4812000	4	Washer M10	
44	4812100	4	Washer M12	
45	4812200	9	Washer M14	
46	4892000	4	Washer 5/8	
47	4831900	2	Washer M8	
48	8405201	8	Clamp	
49	8405204	5	Clamp	
51	8410013	5	Clamp	
52	91563070	1	Coupling, Rubber	

ITEM	PART NUMBER	QTY	DESCRIPTION	REV
55	1001249964	1	Engine, Deutz TCD2.9L4 (See Separate Breakdown in this Section)	
58	1001133633	1	Air Cleaner Assembly	
58	70024190	1	Element, Air Filter	
59	1001133634	1	Clamp	
60	1001166393	1	Tank, Surge	
61	1001155575	4	Mount, Motor	
62	1001191272	1	Tray	
63	1001256864	1	Radiator	
64	1001135138	1	Spacer, Fan	
67	1001135560	1	Support, Engine	
68	1001135562	1	Support, Engine - Rear	
69	1001135679	1	Spacer, Pulley	
70	1001135680	1	Support, Radiator	
71	1001135901	1	Pipe, Air Intake	
72	1001264917	1	Pipe, Air Intake	
73	3931432	1	Capscrew 1/4 x 2	
74	1001264982	1	Pipe, Air Cleaner to Intake	
75	1001135924	1	Hose, Radiator (Upper)	
76	1001135926	1	Hose, Radiator (Lower)	
78	1001135943	1	Coupling, Rubber	
81	1001136626	2	Bracket	
82	1001136665	1	Bracket	
83	1001136834	1	Cap, Tank	
84	1001283008	1	Support, Engine	
85	1001137276	1	Fan	
87	8405007	2	Clamp	
89	4711400	3	Washer 1/4	
90	1001117308	1	Relay	
92	1001135913	1	Pipe, Turbo to Air Cleaner	
93	1001138827	1	Sensor, Coolant Level	
94	1001138228	1	Module, Power	
94	70023592	1	Fuse 20Amp (Switched Output)	
94	70023593	1	Fuse 30Amp (Battery Output)	
95	1001138253	5	Clamp	
96	1001138346	1	Harness, Engine (Not Shown - See Separate Breakdown in ELECTRICAL Section)	
97	1001138524	1	Hose	
98	1001138559	1	Fitting, 90	
99	2720015	5 ft /2 m	Hose	
101	2902065	1	Pump Coupling Kit (See Separate Breakdown in this Section)	
102	3310401	3	Nut #4	
103	3910408	3	Screw #4 x 1/2	
104	4710400	3	Washer #4	
105	1001139240	1	Bracket	
106	1001138248	4 ft /1.2 m	Tubing	
107	1001153024	1	Pipe, Exhaust	
110	1320022	2	Clamp	
111	1001165035	31 ft /10 m	Hose	
112	0100011	AR	Compound, Locking	
113	0100020	AR	Sealant	

SECTION 3 - ENGINE

ITEM	PART NUMBER	QTY	DESCRIPTION	REV
114	1001141304	1	Wire, Glow Plug (Not Shown)	
115	1001135779	1	Cable, Alternator Positive (Not Shown)	
117	1001141717	1	Fitting, Straight	
120	0761214	3	Bolt M12 x 30	
122	1001142685	1	Bracket	
123	1001165820	1	Pipe, Elbow	
124	1001143390	1	Indicator, Air Filter Service	
125	0760810	2	Bolt M8 x 20	
126	1001144089	1	Grommet	
127	1001145154	1	Plate, Mounting	
128	4640751	1	Valve, Oil Drain	
129	8405006	2	Clamp	
130	8406102	AR	Clip	
131	8406112	1	Clip	
132	1001138717	1	Bracket	
133	1001142501	1	Fitting, 90 Barbed	
134	1001154405	5 ft /2 m	Hose	
135	1001148843	1	Harness, Fuel Filter (Not Shown - See Separate Breakdown in ELECTRICAL Section)	
137	1703162	2	Decal - Fan	
138	0641503	1	Bolt 5/16 x 3/8	
139	1001153387	1	Plate	
140	3931508	2	Capscrew 5/16 x 1/2	
141	1001155823	1	Coupling	
142	0100062	AR	Adhesive, Loctite #680	
143	4240099	AR	Tie-Strap (Not Shown)	
144	8410011	1	Clamp	
145	0700812	1	Bolt M8 x 25	
146	1321289	1	Clamp	
147	3290806	1	Nut M8	
148	0641510	2	Bolt 5/16 x 1-1/4	
149	0641612	2	Bolt 3/8 x 1-1/2	
150	4240032	AR	Tie-Strap (Not Shown)	
151	1001291401	1	Tag, Coolant	

FIGURE 3-37. DEUTZ TCD2.9L4 (EMR4) ENGINE ASSEMBLY (WITH COLD WEATHER PLUS PACKAGE)

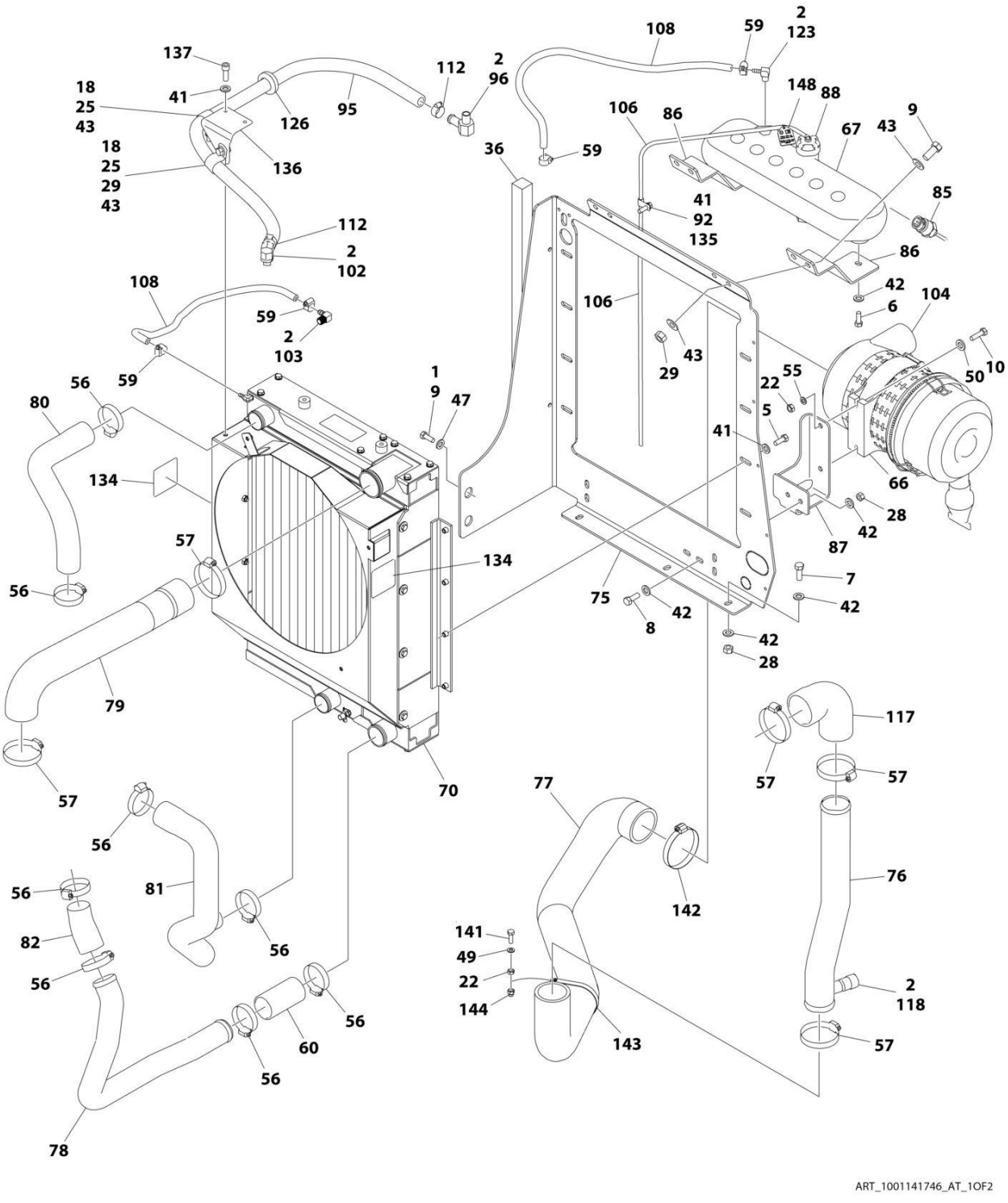

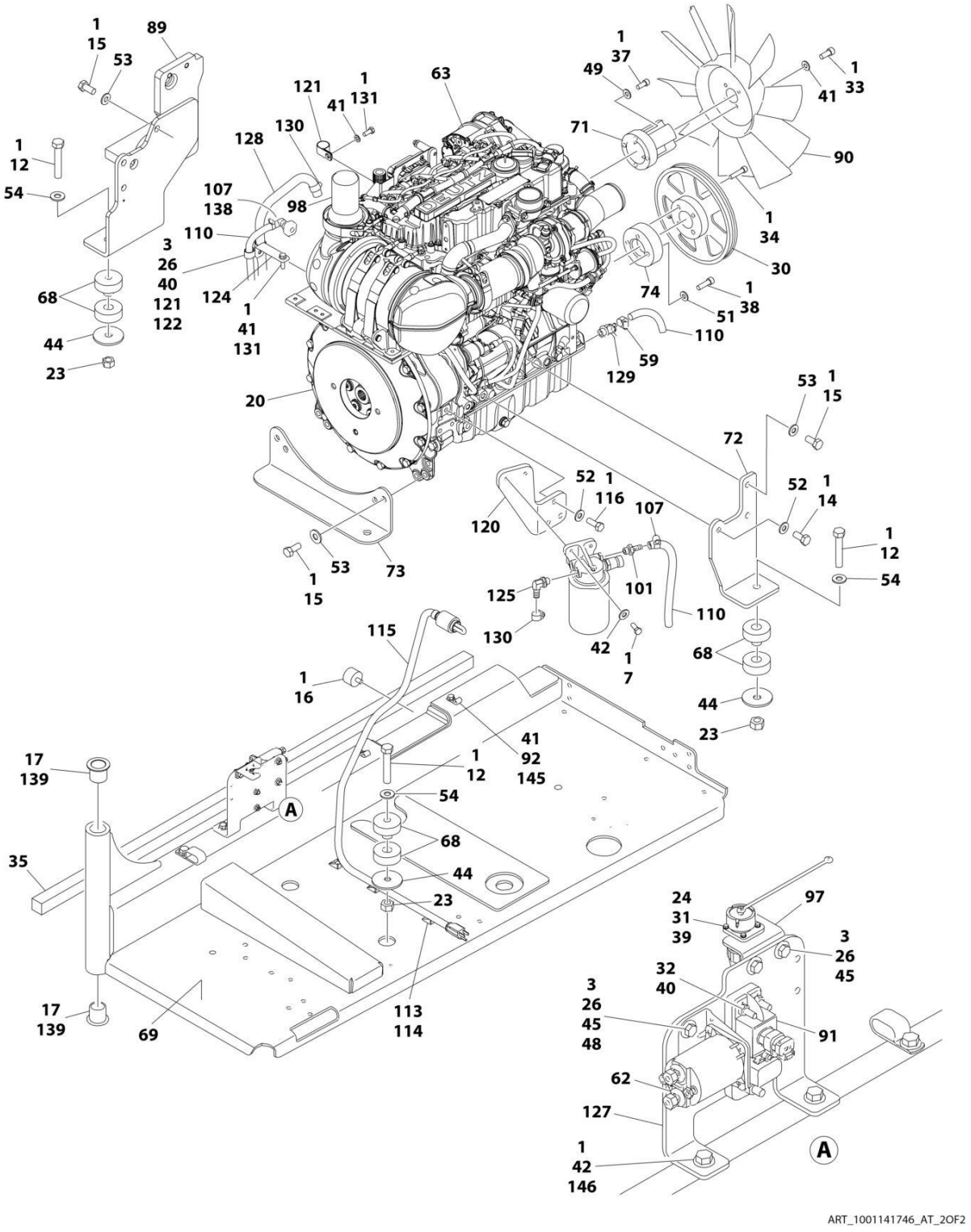
ART_1001141746_AT_2OF2

FIGURE 3-37. DEUTZ TCD2.9L4 (EMR4) ENGINE ASSEMBLY (WITH COLD WEATHER PLUS PACKAGE)

ITEM	PART NUMBER	QTY	DESCRIPTION	REV
	1001141746	Ref	DEUTZ TCD2.9L4 ENGINE ASSEMBLY	AT
1	0100011	AR	Compound, Locking	
2	0100020	AR	Sealant	
3	0641406	5	Bolt 1/4 x 3/4	
5	0641508	8	Bolt 5/16 x 1	
6	0641606	2	Bolt 3/8 x 3/4	
7	0641608	9	Bolt 3/8 x 1	
8	0641610	2	Bolt 3/8 x 1-1/4	
9	0641708	6	Bolt 7/16 x 1	
10	0700815	2	Bolt M8 x 35	
12	0682028	4	Bolt 5/8 x 3-1/2 Grade 8	
14	0771212	1	Bolt M12 x 25 Grade 10.9	
15	0771414	9	Bolt M14 x 30 Grade 10.9	
16	0940070	1	Bumper	
17	0961986	2	Bushing, Flanged	
18	0641706	2	Bolt 7/16 x 3/4	
20	2902065	1	Pump Coupling Kit (See Separate Breakdown in this Section)	
22	3290801	3	Nut M8	
23	3272001	4	Nut 5/8 Grade 8	
24	3310401	3	Nut #4	
25	8406302	2	Clamp	
26	3311405	6	Nut 1/4	
28	3311605	9	Nut 3/8	
29	3311705	5	Nut 7/16	
30	3580320	1	Pulley	
31	3910408	3	Screw #4 x 1/2	
32	3931432	1	Capscrew 1/4 x 2	
33	3931512	4	Capscrew 5/16 x 3/4	
34	3931628	4	Capscrew 3/8 x 1-3/4	
35	3960543	1	Seal	
36	3960544	1	Seal	
37	4031914	4	Bolt M8 x 50	
38	4032014	4	Bolt M10 x 50	
39	4710400	3	Washer #4	
40	4711400	3	Washer 1/4	
41	4711500	19	Washer 5/16	
42	4711600	24	Washer 3/8	
43	4711700	10	Washer 7/16	
44	1001146219	4	Washer Special	
45	4751400	8	Washer 1/4	
47	4751700	2	Washer 7/16	
48	4791400	2	Starwasher 1/4	
49	4811900	5	Washer M8	
50	4811902	2	Washer M8	
51	4812000	4	Washer M10	
52	4812100	4	Washer M12	
53	4812200	9	Washer M14	
54	4892000	4	Washer 5/8	
55	4831900	2	Washer M8	

ITEM	PART NUMBER	QTY	DESCRIPTION	REV
56	8405201	8	Clamp	
57	8405204	5	Clamp	
59	8410013	5	Clamp	
60	91563070	1	Coupling, Rubber	
62	1001117308	1	Relay	
63	1001249964	1	Engine, Deutz TCD2.9L4 (See Separate Breakdown in this Section)	
66	1001133634	1	Clamp	
67	1001166393	1	Tank, Surge	
68	1001155575	4	Mount, Motor	
69	1001191272	1	Tray	
70	1001256864	1	Radiator	
71	1001135138	1	Spacer, Fan	
72	1001135560	1	Support, Engine	
73	1001135562	1	Support, Engine - Rear	
74	1001135679	1	Spacer, Pulley	
75	1001135680	1	Support, Radiator	
76	1001135901	1	Pipe, Air Intake	
77	1001264917	1	Hose, Air Intake	
78	1001135913	1	Pipe, Turbo to Air Cleaner	
79	1001264982	1	Hose, Air Cleaner to Intake	
80	1001135924	1	Hose, Radiator (Upper)	
81	1001135926	1	Hose, Radiator (Lower)	
82	1001135943	1	Coupling, Rubber	
85	1001138827	1	Sensor, Coolant Level	
86	1001136626	2	Bracket	
87	1001136665	1	Bracket	
88	1001136834	1	Cap, Tank	
89	1001283008	1	Support, Engine	
90	1001137276	1	Fan	
91	1001138228	1	Module, Power	
91	70023592	1	Fuse 20Amp (Switched Output)	
91	70023593	1	Fuse 30Amp (Battery Output)	
92	1001138253	5	Clamp	
94	1001138346	1	Harness, Engine (Not Shown - See Separate Breakdown in ELECTRICAL Section)	
95	1001138524	1	Hose	
96	1001138559	1	Fitting, 90	
97	1001139240	1	Bracket	
98	1001153024	1	Pipe, Exhaust	
100	1001141304	1	Wire, Glow Plug (Not Shown)	
101	1001141717	1	Fitting, Straight	
102	1001141719	1	Fitting, 90 Barbed	
103	1001140564	1	Fitting, 90 Barbed	
104	1001133633	1	Air Cleaner Assembly	
104	70024190	1	Element, Air Filter	
105	1001135779	1	Cable, Alternator Positive (Not Shown)	
106	1001138248	4 ft /1.2 m	Tubing	
107	1320022	2	Clamp	
108	2720015	5 ft /2 m	Hose	
110	1001165035	31 ft /10 m	Hose	

SECTION 3 - ENGINE

ITEM	PART NUMBER	QTY	DESCRIPTION	REV
112	8405007	2	Clamp	
113	4240099	AR	Tie-Strap (Used to Secure Block Heater Cord)	
114	4460234	3	Mount, Wire Tie (Used to Secure Block Heater Cord)	
115	1001140312	1	Heater, Block	
116	0761214	3	Bolt M12 x 30	
117	1001165820	1	Pipe, Elbow	
118	1001143390	1	Indicator, Air Filter Service	
120	1001142685	1	Bracket	
121	8406102	AR	Clip	
122	8406112	1	Clip	
123	1001134488	1	Fitting, 90 Barbed	
124	1001138717	1	Bracket	
125	1001142501	1	Fitting, 90 Barbed	
126	1001144089	1	Grommet	
127	1001145154	1	Plate, Mounting	
128	1001154405	5 ft /2 m	Hose	
129	4640751	1	Valve, Oil Drain	
130	8405006	2	Clamp	
131	0760810	AR	Bolt M8 x 20	
132	1001148843	1	Harness, Fuel Filter (Not Shown - See Separate Breakdown in ELECTRICAL Section)	
134	1703162	2	Decal - Fan	
135	0641503	1	Bolt 5/16 x 3/8	
136	1001153387	1	Plate	
137	3931508	2	Capscrew 5/16 x 1/2	
138	1001155823	1	Coupling	
139	0100062	AR	Adhesive, Loctite #680	
140	1001181895	AR	Adhesive, Loctite #640 (Not Shown - Apply to Block Heater)	
141	0700812	1	Bolt M8 x 25	
142	8410011	1	Clamp	
143	1321289	1	Clamp	
144	3290806	1	Nut M8	
145	0641510	2	Bolt 5/16 x 1-1/4	
146	0641612	2	Bolt 3/8 x 1-1/2	
147	4240032	AR	Tie-Strap (Not Shown)	
148	1001291401	1	Tag, Coolant	

FIGURE 3-38. DEUTZ TCD2.9L4 (EMR4) ENGINE COMPONENTS

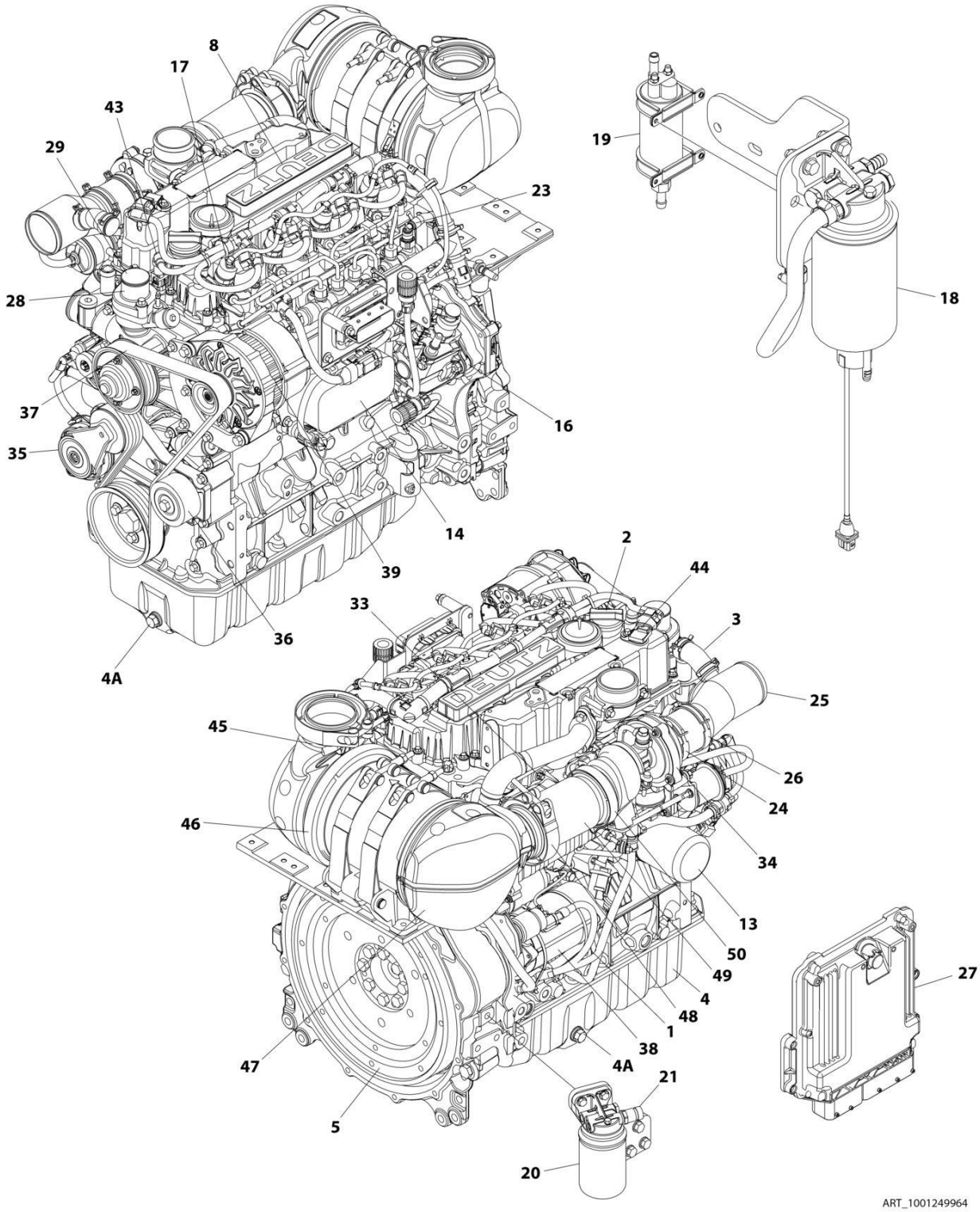

FIGURE 3-38. DEUTZ TCD2.9L4 (EMR4) ENGINE COMPONENTS

ITEM	PART NUMBER	QTY	DESCRIPTION	REV
	1001249964	Ref	DEUTZ TCD2.9L4 ENGINE COMPONENTS	A
1	70024904	1	Dipstick	
1	70024905	1	O-Ring	
2	7020465	2	Cap, Filler	
3	7002511	2	Clamp	
4		Ref	Pan, Oil	
4A	70005941	2	Plug	
4A	70005942	2	Washer, Sealing	
5	70001870	1	Flywheel	
5	7024579	1	Gear, Ring	
6	70024906	1	Gasket, Head (Not Shown)	
8	70005921	1	Cover, Valve	
8	70005171	1	Gasket	
8	70025205	1	Gasket, Small Valve Cover	
10	70004280	1	Seal, Shaft - Front (Not Shown)	
11	70002718	1	Seal, Shaft - Rear (Not Shown)	
12	70005172	1	Pump, Oil Lube (Not Shown)	
12	70025135	1	O-Ring	
12	70025136	1	Gasket	
13	7016331	1	Filter, Oil	
13	70025137	1	Bushing	
14	70024494	1	Cooler, Engine Oil	
14	70024925	1	Gasket	
16	70024924	1	Pump, Fuel	
16	70025152	1	O-Ring	
16	70004505	1	Valve, Overflow	
16	70004506	1	O-Ring	
16	70004507	1	O-Ring	
16	70004508	1	Valve Volume Control	
16	70004509	1	O-Ring	
16	70004510	1	Gasket	
17	70025181	4	Injector, Fuel	
17	70025140	4	Washer, Sealing	
17	70025146	4	Clamp (Top of Injector)	
17	70025145	4	O-Ring	
17	70025154	4	Shoe, Clamping	
17	70000345	1	Plug, Glow (Not Shown)	
18	70024961	1	Fuel Filter Assembly	
18	1001225430	1	Filter, Fuel	
18	70024513	1	Cable, Sensor	
18	70025239	1	Ring, Sealing	
19	70006144	1	Pump, Fuel	
19	70025144	2	Clamp	
20	70029451	1	Filter with Head	
20	1001225431	1	Filter, Fuel	
21	70024919	1	Sensor, Pressure	
21	70024920	1	O-Ring	
22	70025151	1	Rail, Fuel (Not Shown)	
22	70025235	1	Repair Kit (Not Shown)	
23	70025182	1	Fuel Line - High Pressure (Cylinder 1 & 2)	

ITEM	PART NUMBER	QTY	DESCRIPTION	REV
23	70025183	1	Fuel Line - High Pressure (Cylinder 3 & 4)	
23	70025184	1	Fuel Line - High Pressure (Supply)	
24	70004501	1	Sleeve, Rubber	
25	70004502	1	Pipe, Intake	
25	70005926	1	Pipe, Elbow	
26	70025112	2	Clamp	
27	70025210	1	ECU (Engine Control Unit)	
28	70029797	1	Pump, Water	
28	70025200	1	Ring, Sealing	
28	70007325	1	Gasket	
28	7020492	2	Ring, Sealing (Plug)	
29	70005929	1	Thermostat	
29	70025184	1	O-Ring (Thermostat to Cover)	
29	70005931	1	Gasket (Thermostat to Pump)	
29	70025142	1	Cover, Thermostat	
31	70007326	1	Valve, Shuttle (EGR) (Not Shown)	
31	70007327	1	Gasket	
33	70004282	1	Manifold, Exhaust	
33	70025164	1	Gasket, Exhaust Manifold to Head	
33	70029557	1	Gasket, Exhaust Manifold to Pipe	
34	70007328	1	Turbocharger	
34	70024912	1	Gasket, Exhaust Manifold	
35	70028699	1	Tensioner, Belt	
36		Ref	Idler Roller	
37	70004277	1	Belt, Drive	
38	70024915	1	Starter	
38	70005647	1	Switch, Solenoid	
38	70005648	1	Relay	
39	70029401	1	Generator	
39	70006653	1	Regulator, Voltage	
40	70007329	1	Harness, Engine (Not Shown)	
41	70024504	1	Sensor, Pressure (Not Shown - Located Top Rear)	
41	70024920	1	O-Ring	
42	70026210	2	Sensor, Speed (Not Shown - Located Left Side Front and Flywheel Housing)	
42	70024917	2	O-Ring	
43	70028540	1	Sender, Temperature	
44	70024507	1	Sensor, Pressure	
44	70025120	1	O-Ring	
45	70007331	1	Outlet, Muffler	
46	70029517	1	Clip	
46	70029520	1	Gasket	
47	70007330	1	Inlet	
48	70025877	1	Clip	
48	70025788	1	Nut	
48	70025242	1	Gasket	
49	70004504	1	Compensator	
50	70005527	1	Clip	
50	70029433	1	Clip	
50	70025242	1	Gasket	

FIGURE 3-39. DEUTZ D2.9L4 - EMR5 ENGINE INSTALLATION WITH PMP PUMP AND STEEL HOODS (WITH COLD WEATHER PLUS PACKAGE)

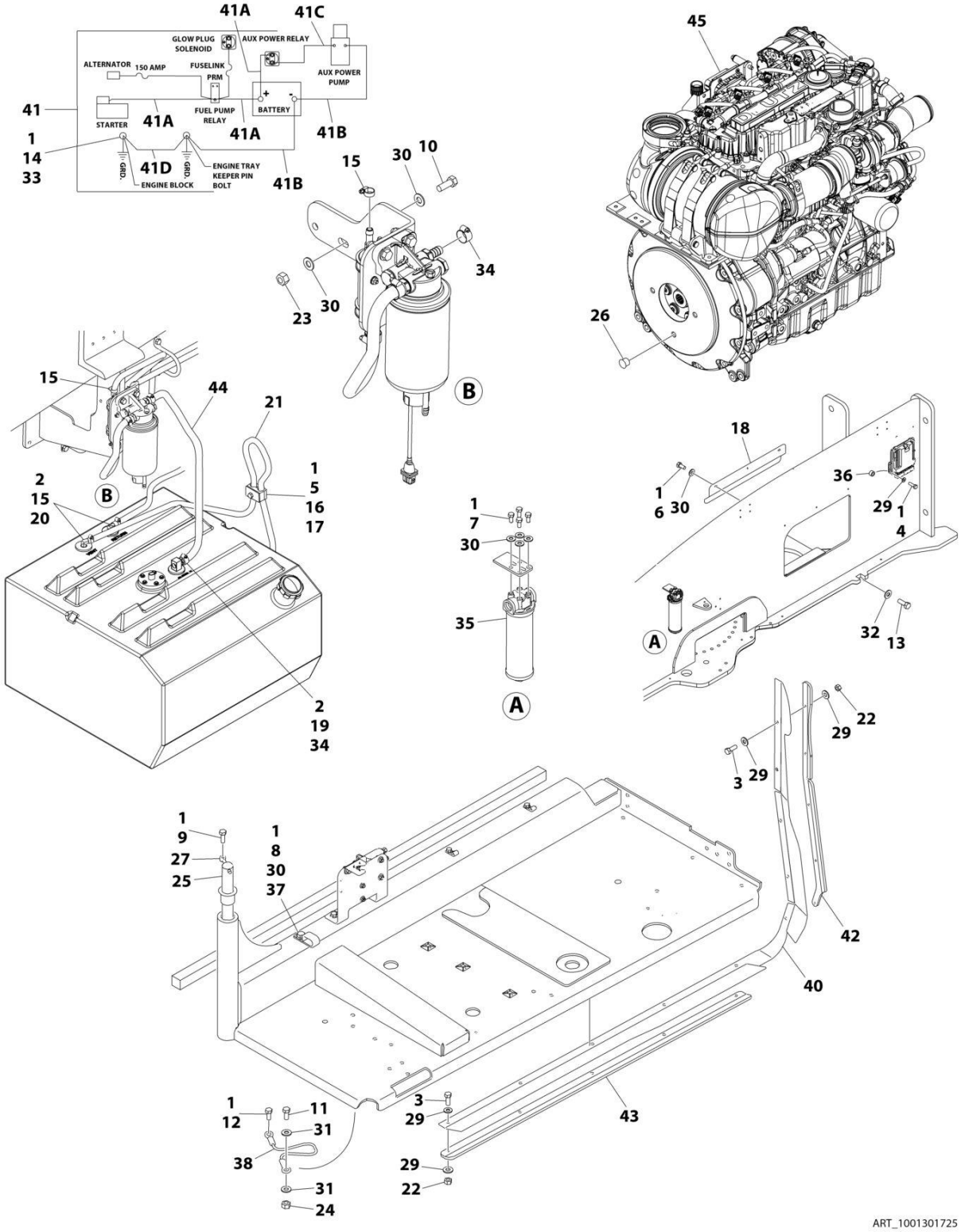

FIGURE 3-39. DEUTZ D2.9L4 - EMR5 ENGINE INSTALLATION WITH PMP PUMP AND STEEL HOODS (WITH COLD WEATHER PLUS PACKAGE)

ITEM	PART NUMBER	QTY	DESCRIPTION	REV
	1001301725	Ref	ENGINE INSTALLATION EMR5 WITH PMP PUMPS AND STEEL HOODS WITH COLD WEATHER PLUS PACKAGE	B
1	0100011	AR	Compound, Locking	
2	0100079	AR	Sealant, Pipe	
3	0641408	10	Bolt 1/4 x 1	
4	0641410	4	Bolt 1/4 x 1-1/4	
5	0641511	1	Bolt 5/16 x 1-3/8	
6	0641605	3	Bolt 3/8 x 5/8	
7	0641606	4	Bolt 3/8 x 3/4	
8	0641608	5	Bolt 3/8 x 1	
9	0641610	1	Bolt 3/8 x 1-1/4	
10	0641612	2	Bolt 3/8 x 1-1/2	
11	0641708	1	Bolt 7/16 x 1	
12	0641808	1	Bolt 1/2 x 1	
13	0642010	1	Bolt 5/8 x 1-1/4	
14	0761210	1	Bolt M12 x 20	
15	1320022	3	Clamp	
16	1320187	1	Clamp	
17	1320190	1	Clamp	
18	1671121	1	Cover	
19	2180832	1	Fitting, Barbed	
20	2220313	2	Fitting, 90 NPTF/Barbed	
21	2750532	5 ft /1.6 m	Hose	
22	3311405	10	Nut 1/4	
23	3311605	2	Nut 3/8	
24	3311705	1	Nut 7/16	
25	3422446	1	Pin	
26	3520054	1	Plug	
27	3841143	1	Keeper, Pin	
28	4240018	AR	Tie-Strap (Not Shown)	
29	4711400	24	Washer 1/4	
30	4711600	16	Washer 3/8	
31	4711700	2	Washer 7/16	
32	4752000	1	Washer 5/8	
33	4812100	1	Washer M12	
34	8405006	2	Clamp	
35	1001108617	1	Filter	
35	70002231	1	Element, Filter	
36	1001110425	4	Spacer	
37	1001116792	1	Clamp	
37	1321716	5	Clamp	
38	1001131542	1	Lanyard	
39	1001138491	1	Harness, Fuel (Not Shown) (See Separate Breakdown in ELECTRICAL Section)	
40	1001140604	1	Panel	
41	1001141225	1	Battery Cable Kit	
41A	7027042	1	Cable, Battery (Red) (Battery + to Relays and Starter)	
41B	7027043	1	Cable, Battery (Black) (Battery - to Tray Pivot Grd and Aux Pump)	

ITEM	PART NUMBER	QTY	DESCRIPTION	REV
41C	7027044	1	Cable (Red) (Aux Relay to Aux Pump)	
41D	7027045	1	Cable, Battery (Black) (Engine to Tray Pivot Grd)	
42	1001145089	1	Clamp	
43	1001145842	1	Plate	
44	1001154405	2 ft /0.6 m	Hose	
45	1001301654	1	Engine Sub-Assembly (See Separate Breakdown in this Section)	
46	4460234	AR	Mount, Terminal (Not Shown)	

FIGURE 3-40. DEUTZ D2.9L4 - EMR5 ENGINE INSTALLATION WITH PMP PUMPS AND STEEL HOODS (WITH COLD WEATHER PLUS PACKAGE)

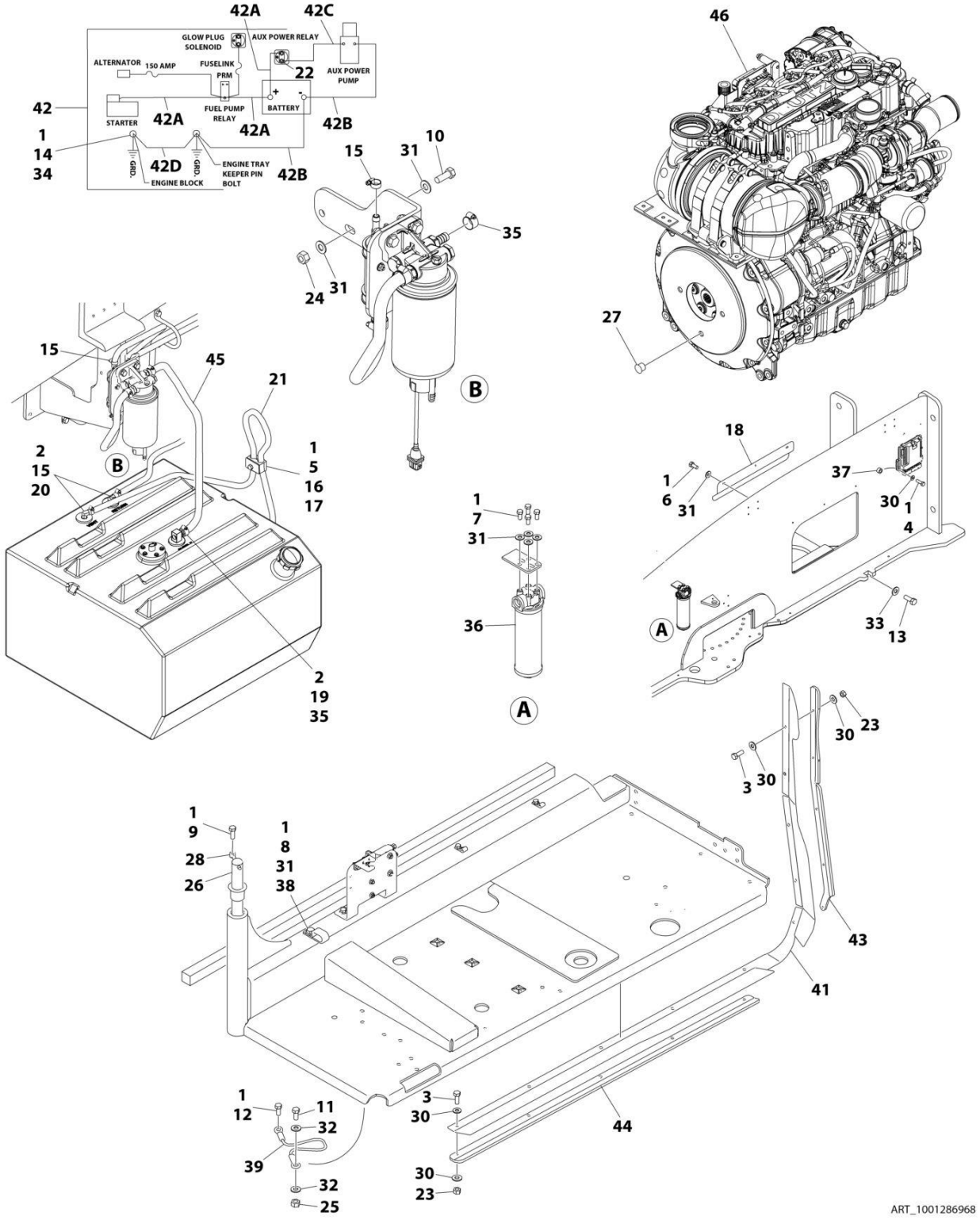

FIGURE 3-40. DEUTZ D2.9L4 - EMR5 ENGINE INSTALLATION WITH PMP PUMPS AND STEEL HOODS (WITH COLD WEATHER PLUS PACKAGE)

ITEM	PART NUMBER	QTY	DESCRIPTION	REV
	1001286968	Ref	ENGINE INSTALLATION WITH PMP PUMPS AND STEEL HOODS WITH COLD WEATHER PLUS PACKAGE	A
1	0100011	AR	Compound, Locking	
2	0100079	AR	Sealant, Pipe	
3	0641408	10	Bolt 1/4 x 1	
4	0641410	4	Bolt 1/4 x 1-1/4	
5	0641511	1	Bolt 5/16 x 1-3/8	
6	0641605	3	Bolt 3/8 x 5/8	
7	0641606	4	Bolt 3/8 x 3/4	
8	0641608	1	Bolt 3/8 x 1	
9	0641610	1	Bolt 3/8 x 1-1/4	
10	0641612	2	Bolt 3/8 x 1-1/2	
11	0641708	1	Bolt 7/16 x 1	
12	0641808	1	Bolt 1/2 x 1	
13	0642010	1	Bolt 5/8 x 1-1/4	
14	0761210	1	Bolt M12 x 20	
15	1320022	3	Clamp	
16	1320187	1	Clamp	
17	1320190	1	Clamp	
18	1671121	1	Cover	
19	2180832	1	Fitting, Barbed	
20	2220313	2	Fitting, 90 NPTF/Barbed	
21	2750532	5 ft /1.6 m	Hose	
22	3300220	2	Nut	
23	3311405	10	Nut 1/4	
24	3311605	2	Nut 3/8	
25	3311705	1	Nut 7/16	
26	3422446	1	Pin	
27	3520054	1	Plug	
28	3841143	1	Keeper, Pin	
29	4240018	AR	Tie-Strap (Not Shown)	
30	4711400	24	Washer 1/4	
31	4711600	12	Washer 3/8	
32	4711700	2	Washer 7/16	
33	4752000	1	Washer 5/8	
34	4812100	1	Washer M12	
35	8405006	2	Clamp	
36	1001108617	1	Filter	
36	70002231	1	Element, Filter	
37	1001110425	4	Spacer	
38	1001116792	1	Clamp	
39	1001131542	1	Lanyard	
40	1001138491	1	Harness, Fuel (Not Shown) (See Separate Breakdown in ELECTRICAL Section)	
41	1001140604	1	Panel	
42	1001141225	1	Battery Cable Kit	
42A	7027042	1	Cable, Battery (Red) (Battery + to Relays and Starter)	
42B	7027043	1	Cable, Battery (Black) (Battery - to Tray Pivot Grd and Aux Pump)	

SECTION 3 - ENGINE

ITEM	PART NUMBER	QTY	DESCRIPTION	REV
42C	7027044	1	Cable (Red) (Aux Relay to Aux Pump)	
42D	7027045	1	Cable, Battery (Black) (Engine to Tray Pivot Grd)	
43	1001145089	1	Clamp	
44	1001145842	1	Plate	
45	1001154405	2 ft /0.6 m	Hose	
46	1001286969	1	Engine Sub-Assembly (See Separate Breakdown in this Section)	

FIGURE 3-41. DEUTZ D2.9L4 - EMR5 ENGINE INSTALLATION WITH PMP PUMPS AND ABS HOODS (WITHOUT COLD WEATHER PLUS PACKAGE)

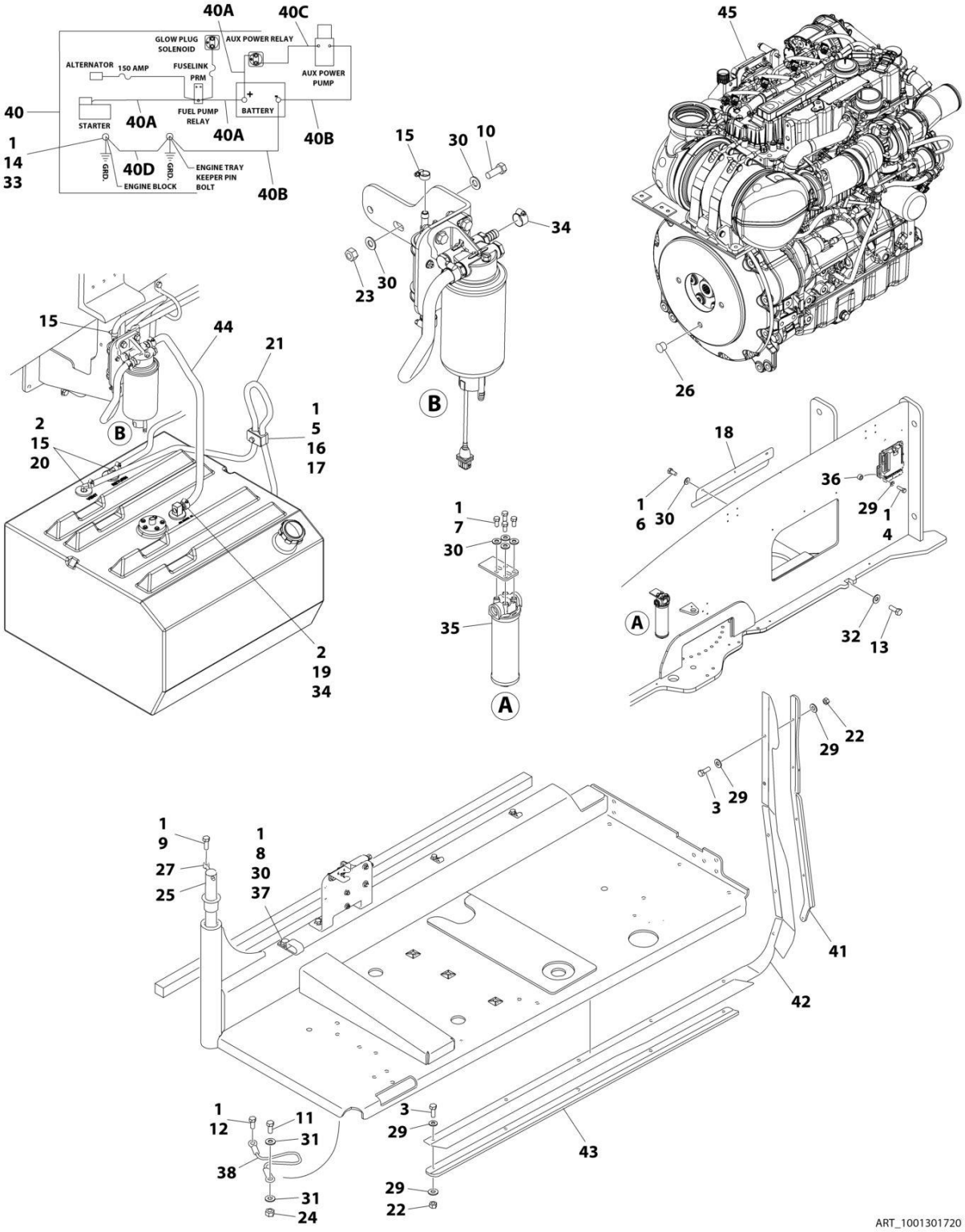

FIGURE 3-41. DEUTZ D2.9L4 - EMR5 ENGINE INSTALLATION WITH PMP PUMPS AND ABS HOODS (WITHOUT COLD WEATHER PLUS PACKAGE)

ITEM	PART NUMBER	QTY	DESCRIPTION	REV
	1001301720	Ref	ENGINE INSTALLATION EMR5 WITH PMP PUMPS AND ABS HOODS WITHOUT COLD WEATHER PLUS PACKAGE	B
1	0100011	AR	Compound, Locking	
2	0100079	AR	Sealant, Pipe	
3	0641408	10	Bolt 1/4 x 1	
4	0641410	4	Bolt 1/4 x 1-1/4	
5	0641511	1	Bolt 5/16 x 1-3/8	
6	0641605	3	Bolt 3/8 x 5/8	
7	0641606	4	Bolt 3/8 x 3/4	
8	0641608	5	Bolt 3/8 x 1	
9	0641610	1	Bolt 3/8 x 1-1/4	
10	0641612	2	Bolt 3/8 x 1-1/2	
11	0641708	1	Bolt 7/16 x 1	
12	0641808	1	Bolt 1/2 x 1	
13	0642010	1	Bolt 5/8 x 1-1/4	
14	0761210	1	Bolt M12 x 20	
15	1320022	3	Clamp	
16	1320187	1	Clamp	
17	1320190	1	Clamp	
18	1671121	1	Cover	
19	2180832	1	Fitting, Barbed	
20	2220313	2	Fitting, 90 NPTF/Barbed	
21	2750532	5 ft /1.6 m	Hose	
22	3311405	10	Nut 1/4	
23	3311605	2	Nut 3/8	
24	3311705	1	Nut 7/16	
25	3422446	1	Pin	
26	3520054	1	Plug	
27	3841143	1	Keeper, Pin	
28	4240018	AR	Tie-Strap (Not Shown)	
29	4711400	24	Washer 1/4	
30	4711600	16	Washer 3/8	
31	4711700	2	Washer 7/16	
32	4752000	1	Washer 5/8	
33	4812100	1	Washer M12	
34	8405006	2	Clamp	
35	1001108617	1	Filter	
35	70002231	1	Element, Filter	
36	1001110425	4	Spacer	
37	1001116792	1	Clamp	
37	1321716	5	Clamp	
38	1001131542	1	Lanyard	
39	1001138491	1	Harness, Fuel (Not Shown) (See Separate Breakdown in ELECTRICAL Section)	
40	1001141225	1	Battery Cable Kit	
40A	7027042	1	Cable, Battery (Red) (Battery + to Relays and Starter)	
40B	7027043	1	Cable, Battery (Black) (Battery - to Tray Pivot Grd and Aux Pump)	
40C	7027044	1	Cable (Red) (Aux Relay to Aux Pump)	

SECTION 3 - ENGINE

ITEM	PART NUMBER	QTY	DESCRIPTION	REV
40D	7027045	1	Cable, Battery (Black) (Engine to Tray Pivot Grd)	
41	1001145089	1	Clamp	
42	1001145560	1	Panel	
43	1001145842	1	Plate	
44	1001154405	2 ft /0.6 m	Hose	
45	1001301710	1	Engine Sub-Assembly (See Separate Breakdown in this Section)	
46	4460234	AR	Mount, Terminal (Not Shown)	

FIGURE 3-42. DEUTZ D2.9L4 - EMR5 ENGINE INSTALLATION WITH PMP PUMPS AND STEEL HOODS (WITHOUT COLD WEATHER PLUS PACKAGE)

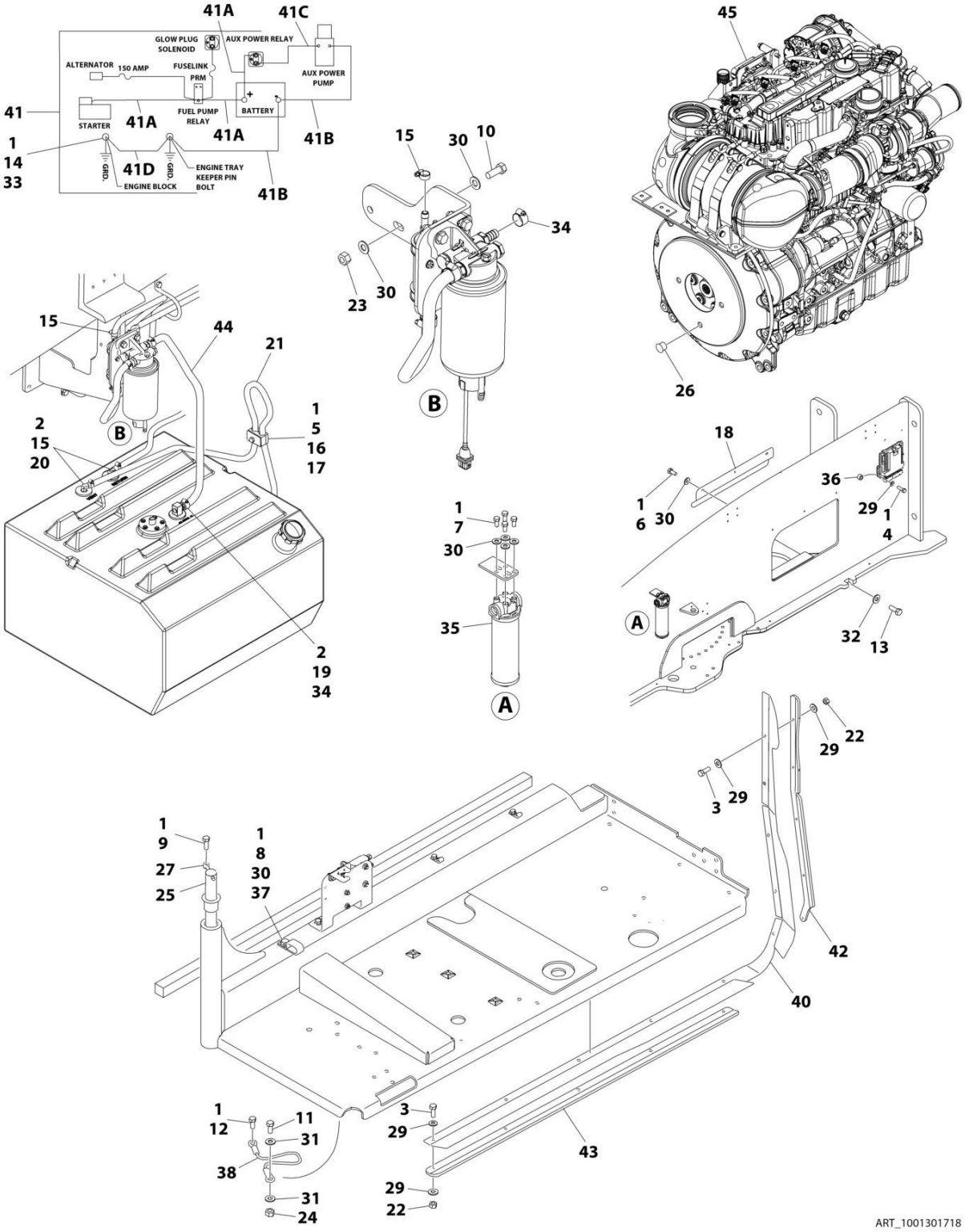

FIGURE 3-42. DEUTZ D2.9L4 - EMR5 ENGINE INSTALLATION WITH PMP PUMPS AND STEEL HOODS (WITHOUT COLD WEATHER PLUS PACKAGE)

ITEM	PART NUMBER	QTY	DESCRIPTION	REV
	1001301718	Ref	ENGINE INSTALLATION EMR5 WITH PMP PUMPS AND STEEL HOODS WITHOUT COLD WEATHER PLUS PACKAGE	B
1	0100011	AR	Compound, Locking	
2	0100079	AR	Sealant, Pipe	
3	0641408	10	Bolt 1/4 x 1	
4	0641410	4	Bolt 1/4 x 1-1/4	
5	0641511	1	Bolt 5/16 x 1-3/8	
6	0641605	3	Bolt 3/8 x 5/8	
7	0641606	4	Bolt 3/8 x 3/4	
8	0641608	5	Bolt 3/8 x 1	
9	0641610	1	Bolt 3/8 x 1-1/4	
10	0641612	2	Bolt 3/8 x 1-1/2	
11	0641708	1	Bolt 7/16 x 1	
12	0641808	1	Bolt 1/2 x 1	
13	0642010	1	Bolt 5/8 x 1-1/4	
14	0761210	1	Bolt M12 x 20	
15	1320022	3	Clamp	
16	1320187	1	Clamp	
17	1320190	1	Clamp	
18	1671121	1	Cover	
19	2180832	1	Fitting, Barbed	
20	2220313	2	Fitting, 90 NPTF/Barbed	
21	2750532	5 ft /1.6 m	Hose	
22	3311405	10	Nut 1/4	
23	3311605	2	Nut 3/8	
24	3311705	1	Nut 7/16	
25	3422446	1	Pin	
26	3520054	1	Plug	
27	3841143	1	Keeper, Pin	
28	4240018	AR	Tie-Strap (Not Shown)	
29	4711400	24	Washer 1/4	
30	4711600	16	Washer 3/8	
31	4711700	2	Washer 7/16	
32	4752000	1	Washer 5/8	
33	4812100	1	Washer M12	
34	8405006	2	Clamp	
35	1001108617	1	Filter	
35	70002231	1	Element, Filter	
36	1001110425	4	Spacer	
37	1001116792	1	Clamp	
37	1321716	5	Clamp	
38	1001131542	1	Lanyard	
39	1001138491	1	Harness, Fuel (Not Shown) (See Separate Breakdown in ELECTRICAL Section)	
40	1001140604	1	Panel	
41	1001141225	1	Battery Cable Kit	
41A	7027042	1	Cable, Battery (Red) (Battery + to Relays and Starter)	
41B	7027043	1	Cable, Battery (Black) (Battery - to Tray Pivot Grd and Aux Pump)	

ITEM	PART NUMBER	QTY	DESCRIPTION	REV
41C	7027044	1	Cable (Red) (Aux Relay to Aux Pump)	
41D	7027045	1	Cable, Battery (Black) (Engine to Tray Pivot Grd)	
42	1001145089	1	Clamp	
43	1001145842	1	Plate	
44	1001154405	2 ft /0.6 m	Hose	
45	1001301710	1	Engine Sub-Assembly (See Separate Breakdown in this Section)	
46	4460234	AR	Mount, Terminal (Not Shown)	

FIGURE 3-43. DEUTZ D2.9L4 - EMR5 ENGINE INSTALLATION WITH REXROTH PUMPS AND STEEL HOODS (WITH COLD WEATHER PLUS PACKAGE)

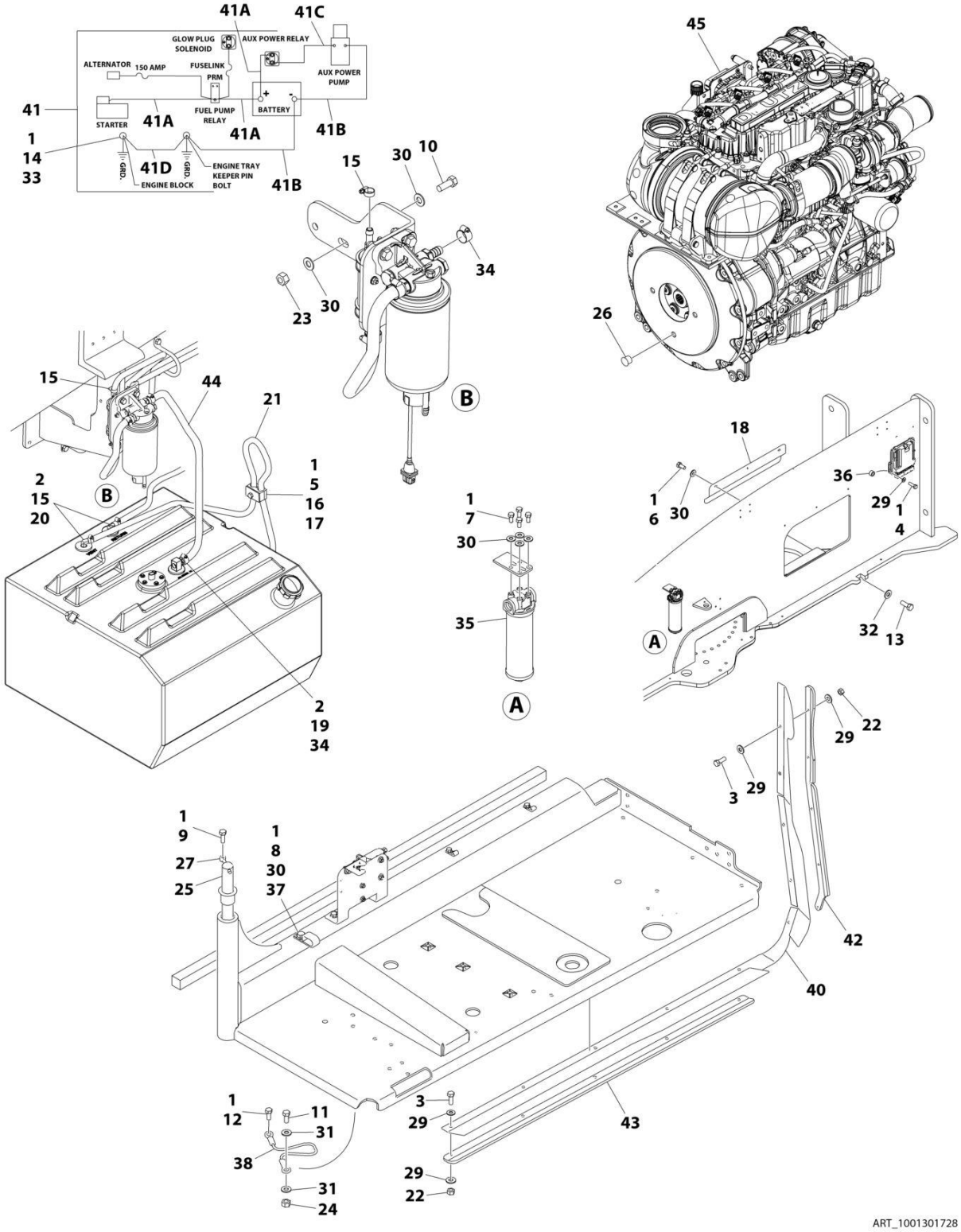

FIGURE 3-43. DEUTZ D2.9L4 - EMR5 ENGINE INSTALLATION WITH REXROTH PUMPS AND STEEL HOODS (WITH COLD WEATHER PLUS PACKAGE)

ITEM	PART NUMBER	QTY	DESCRIPTION	REV
	1001301728	Ref	ENGINE INSTALLATION EMR5 WITH REXROTH PUMPS AND STEEL HOODS WITH COLD WEATHER PLUS PACKAGE	B
1	0100011	AR	Compound, Locking	
2	0100079	AR	Sealant, Pipe	
3	0641408	10	Bolt 1/4 x 1	
4	0641410	4	Bolt 1/4 x 1-1/4	
5	0641511	1	Bolt 5/16 x 1-3/8	
6	0641605	3	Bolt 3/8 x 5/8	
7	0641606	4	Bolt 3/8 x 3/4	
8	0641608	5	Bolt 3/8 x 1	
9	0641610	1	Bolt 3/8 x 1-1/4	
10	0641612	2	Bolt 3/8 x 1-1/2	
11	0641708	1	Bolt 7/16 x 1	
12	0641808	1	Bolt 1/2 x 1	
13	0642010	1	Bolt 5/8 x 1-1/4	
14	0761210	1	Bolt M12 x 20	
15	1320022	3	Clamp	
16	1320187	1	Clamp	
17	1320190	1	Clamp	
18	1671121	1	Cover	
19	2180832	1	Fitting, Barbed	
20	2220313	2	Fitting, 90 NPTF/Barbed	
21	2750532	5 ft /1.6 m	Hose	
22	3311405	10	Nut 1/4	
23	3311605	2	Nut 3/8	
24	3311705	1	Nut 7/16	
25	3422446	1	Pin	
26	3520054	1	Plug	
27	3841143	1	Keeper, Pin	
28	4240018	AR	Tie-Strap (Not Shown)	
29	4711400	24	Washer 1/4	
30	4711600	16	Washer 3/8	
31	4711700	2	Washer 7/16	
32	4752000	1	Washer 5/8	
33	4812100	1	Washer M12	
34	8405006	2	Clamp	
35	1001108617	1	Filter	
35	70002231	1	Element, Filter	
36	1001110425	4	Spacer	
37	1001116792	1	Clamp	
37	1321716	5	Clamp	
38	1001131542	1	Lanyard	
39	1001138491	1	Harness, Fuel (Not Shown) (See Separate Breakdown in ELECTRICAL Section)	
40	1001140604	1	Panel	
41	1001141225	1	Battery Cable Kit	
41A	7027042	1	Cable, Battery (Red) (Battery + to Relays and Starter)	
41B	7027043	1	Cable, Battery (Black) (Battery - to Tray Pivot Grd and Aux Pump)	

ITEM	PART NUMBER	QTY	DESCRIPTION	REV
41C	7027044	1	Cable (Red) (Aux Relay to Aux Pump)	
41D	7027045	1	Cable, Battery (Black) (Engine to Tray Pivot Grd)	
42	1001145089	1	Clamp	
43	1001145842	1	Plate	
44	1001154405	2 ft /0.6 m	Hose	
45	1001301672	1	Engine Sub-Assembly (See Separate Breakdown in this Section)	
46	4460234	AR	Mount, Terminal (Not Shown)	

FIGURE 3-44. DEUTZ D2.9L4 - EMR5 ENGINE INSTALLATION WITH REXROTH PUMPS AND ABS HOODS (WITHOUT COLD WEATHER PLUS PACKAGE)

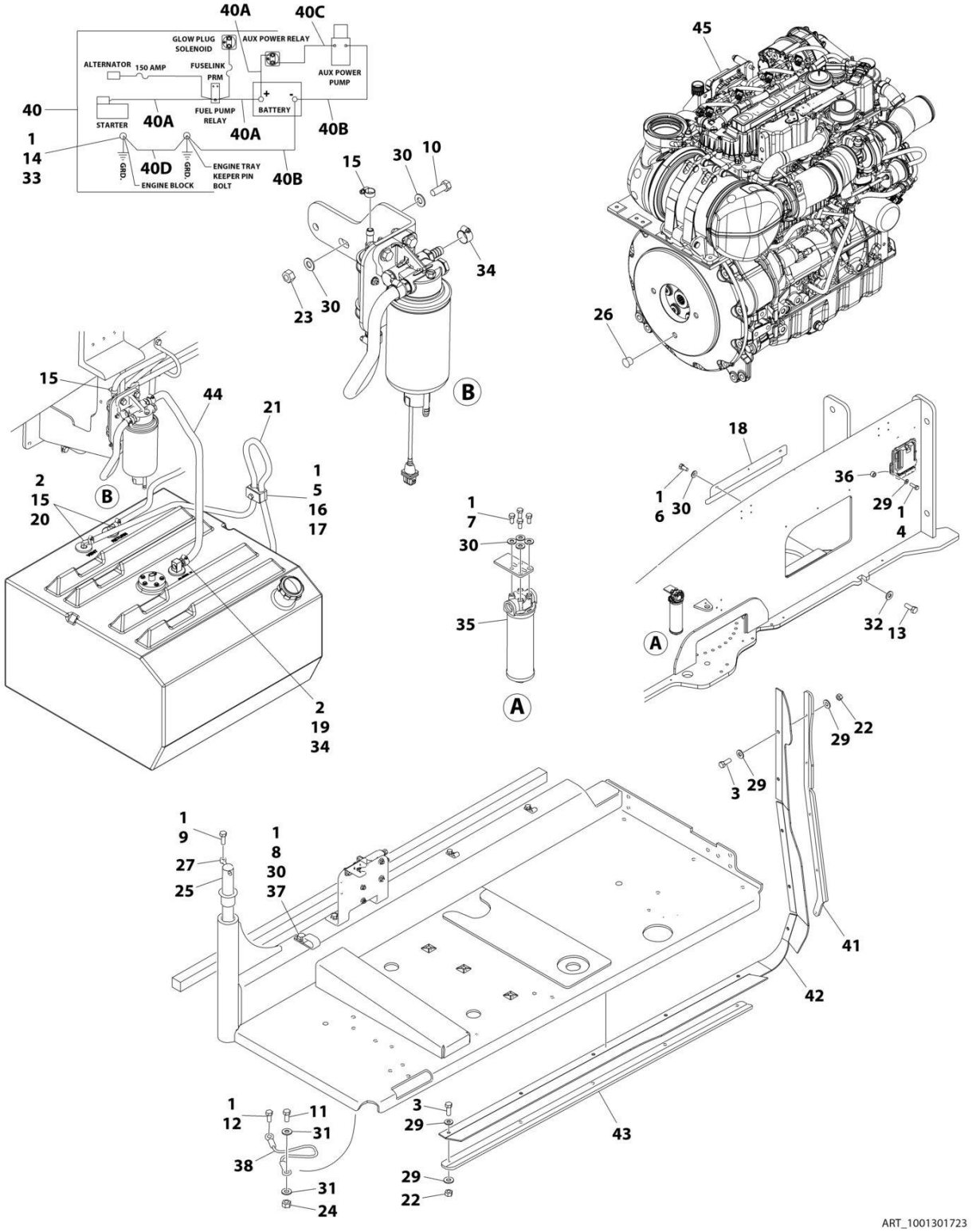

FIGURE 3-44. DEUTZ D2.9L4 - EMR5 ENGINE INSTALLATION WITH REXROTH PUMPS AND ABS HOODS (WITHOUT COLD WEATHER PLUS PACKAGE)

ITEM	PART NUMBER	QTY	DESCRIPTION	REV
	1001301723	Ref	ENGINE INSTALLATION EMR5 WITH REXROTH PUMPS AND ABS HOODS WITHOUT COLD WEATHER PLUS PACKAGE	B
1	0100011	AR	Compound, Locking	
2	0100079	AR	Sealant, Pipe	
3	0641408	10	Bolt 1/4 x 1	
4	0641410	4	Bolt 1/4 x 1-1/4	
5	0641511	1	Bolt 5/16 x 1-3/8	
6	0641605	3	Bolt 3/8 x 5/8	
7	0641606	4	Bolt 3/8 x 3/4	
8	0641608	5	Bolt 3/8 x 1	
9	0641610	1	Bolt 3/8 x 1-1/4	
10	0641612	2	Bolt 3/8 x 1-1/2	
11	0641708	1	Bolt 7/16 x 1	
12	0641808	1	Bolt 1/2 x 1	
13	0642010	1	Bolt 5/8 x 1-1/4	
14	0761210	1	Bolt M12 x 20	
15	1320022	3	Clamp	
16	1320187	1	Clamp	
17	1320190	1	Clamp	
18	1671121	1	Cover	
19	2180832	1	Fitting, Barbed	
20	2220313	2	Fitting, 90 NPTF/Barbed	
21	2750532	5 ft /1.6 m	Hose	
22	3311405	10	Nut 1/4	
23	3311605	2	Nut 3/8	
24	3311705	1	Nut 7/16	
25	3422446	1	Pin	
26	3520054	1	Plug	
27	3841143	1	Keeper, Pin	
28	4240018	AR	Tie-Strap (Not Shown)	
29	4711400	24	Washer 1/4	
30	4711600	16	Washer 3/8	
31	4711700	2	Washer 7/16	
32	4752000	1	Washer 5/8	
33	4812100	1	Washer M12	
34	8405006	2	Clamp	
35	1001108617	1	Filter	
35	70002231	1	Element, Filter	
36	1001110425	4	Spacer	
37	1001116792	1	Clamp	
37	1321716	5	Clamp	
38	1001131542	1	Lanyard	
39	1001138491	1	Harness, Fuel (Not Shown) (See Separate Breakdown in ELECTRICAL Section)	
40	1001141225	1	Battery Cable Kit	
40A	7027042	1	Cable, Battery (Red) (Battery + to Relays and Starter)	
40B	7027043	1	Cable, Battery (Black) (Battery - to Tray Pivot Grd and Aux Pump)	
40C	7027044	1	Cable (Red) (Aux Relay to Aux Pump)	

SECTION 3 - ENGINE

ITEM	PART NUMBER	QTY	DESCRIPTION	REV
40D	7027045	1	Cable, Battery (Black) (Engine to Tray Pivot Grd)	
41	1001145089	1	Clamp	
42	1001145560	1	Panel	
43	1001145842	1	Plate	
44	1001154405	2 ft /0.6 m	Hose	
45	1001301713	1	Engine Sub-Assembly (See Separate Breakdown in this Section)	
46	4460234	AR	Mount, Terminal (Not Shown)	

FIGURE 3-45. DEUTZ D2.9L4 - EMR5 ENGINE INSTALLATION WITH REXROTH PUMPS AND STEEL HOODS (WITHOUT COLD WEATHER PLUS PACKAGE)

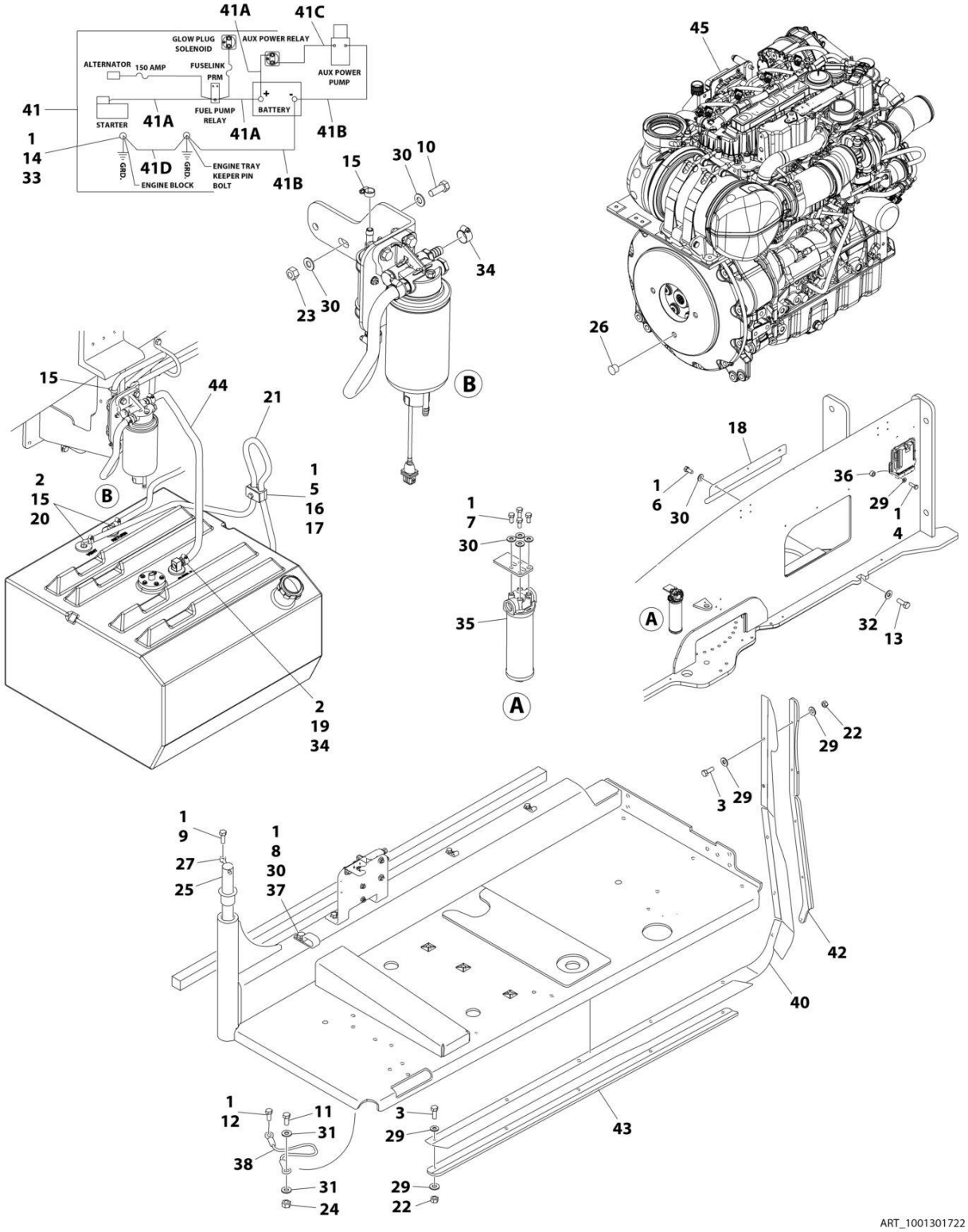

FIGURE 3-45. DEUTZ D2.9L4 - EMR5 ENGINE INSTALLATION WITH REXROTH PUMPS AND STEEL HOODS (WITHOUT COLD WEATHER PLUS PACKAGE)

ITEM	PART NUMBER	QTY	DESCRIPTION	REV
	1001301722	Ref	ENGINE INSTALLATION EMR5 WITH REXROTH PUMPS AND STEEL HOODS WITHOUT COLD WEATHER PLUS PACKAGE	B
1	0100011	AR	Compound, Locking	
2	0100079	AR	Sealant, Pipe	
3	0641408	10	Bolt 1/4 x 1	
4	0641410	4	Bolt 1/4 x 1-1/4	
5	0641511	1	Bolt 5/16 x 1-3/8	
6	0641605	3	Bolt 3/8 x 5/8	
7	0641606	4	Bolt 3/8 x 3/4	
8	0641608	5	Bolt 3/8 x 1	
9	0641610	1	Bolt 3/8 x 1-1/4	
10	0641612	2	Bolt 3/8 x 1-1/2	
11	0641708	1	Bolt 7/16 x 1	
12	0641808	1	Bolt 1/2 x 1	
13	0642010	1	Bolt 5/8 x 1-1/4	
14	0761210	1	Bolt M12 x 20	
15	1320022	3	Clamp	
16	1320187	1	Clamp	
17	1320190	1	Clamp	
18	1671121	1	Cover	
19	2180832	1	Fitting, Barbed	
20	2220313	2	Fitting, 90 NPTF/Barbed	
21	2750532	5 ft /1.6 m	Hose	
22	3311405	10	Nut 1/4	
23	3311605	2	Nut 3/8	
24	3311705	1	Nut 7/16	
25	3422446	1	Pin	
26	3520054	1	Plug	
27	3841143	1	Keeper, Pin	
28	4240018	AR	Tie-Strap (Not Shown)	
29	4711400	24	Washer 1/4	
30	4711600	16	Washer 3/8	
31	4711700	2	Washer 7/16	
32	4752000	1	Washer 5/8	
33	4812100	1	Washer M12	
34	8405006	2	Clamp	
35	1001108617	1	Filter	
35	70002231	1	Element, Filter	
36	1001110425	4	Spacer	
37	1001116792	1	Clamp	
37	1321716	5	Clamp	
38	1001131542	1	Lanyard	
39	1001138491	1	Harness, Fuel (Not Shown) (See Separate Breakdown in ELECTRICAL Section)	
40	1001140604	1	Panel	
41	1001141225	1	Battery Cable Kit	
41A	7027042	1	Cable, Battery (Red) (Battery + to Relays and Starter)	
41B	7027043	1	Cable, Battery (Black) (Battery - to Tray Pivot Grd and Aux Pump)	

ITEM	PART NUMBER	QTY	DESCRIPTION	REV
41C	7027044	1	Cable (Red) (Aux Relay to Aux Pump)	
41D	7027045	1	Cable, Battery (Black) (Engine to Tray Pivot Grd)	
42	1001145089	1	Clamp	
43	1001145842	1	Plate	
44	1001154405	2 ft /0.6 m	Hose	
45	1001301713	1	Engine Sub-Assembly (See Separate Breakdown in this Section)	
46	4460234	AR	Mount, Terminal (Not Shown)	

FIGURE 3-46. DEUTZ D2.9L4 - EMR5 ENGINE INSTALLATION WITH SAUER PUMPS AND STEEL HOODS (WITH COLD WEATHER PLUS PACKAGE)

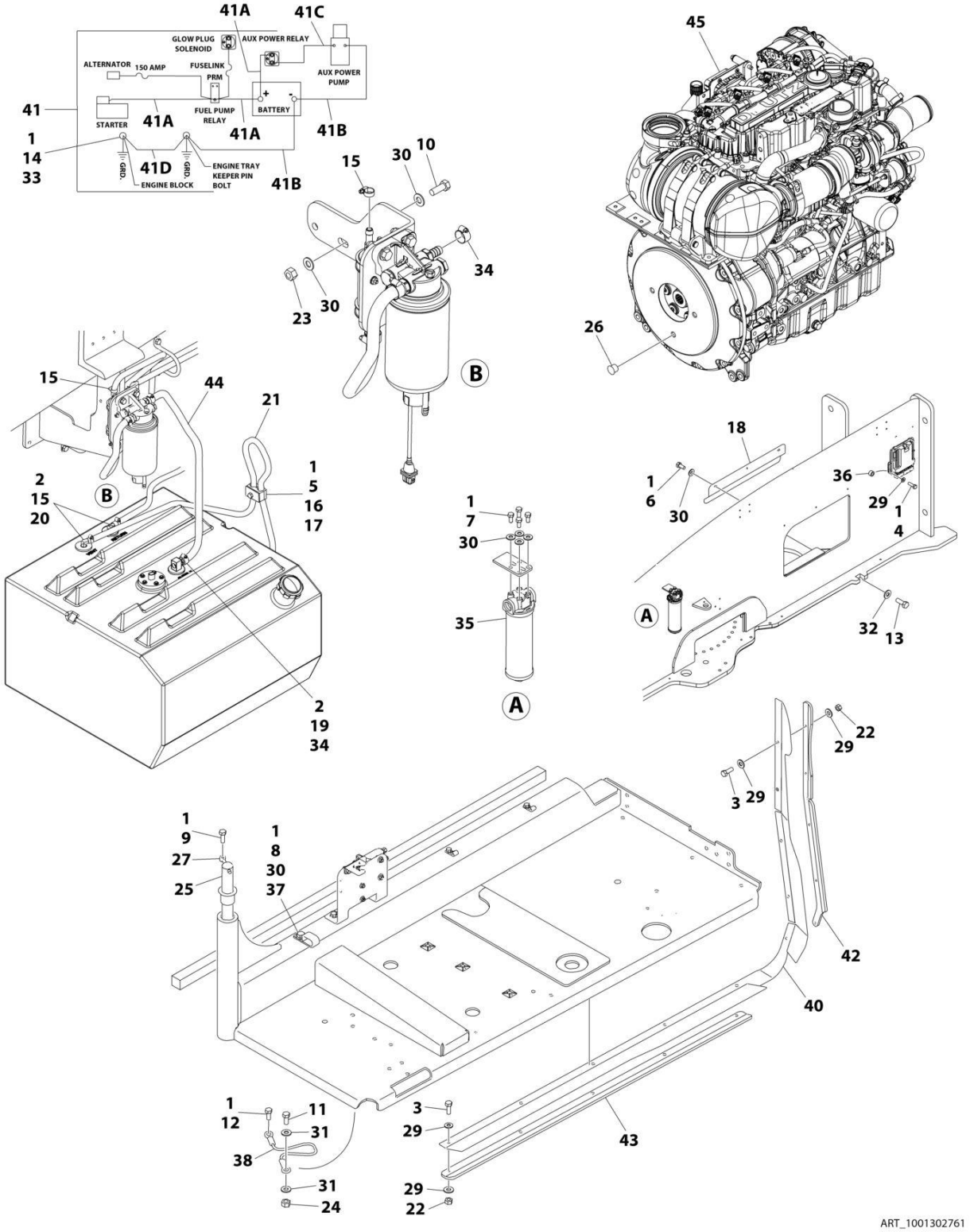

FIGURE 3-46. DEUTZ D2.9L4 - EMR5 ENGINE INSTALLATION WITH SAUER PUMPS AND STEEL HOODS (WITH COLD WEATHER PLUS PACKAGE)

ITEM	PART NUMBER	QTY	DESCRIPTION	REV
	1001302761	Ref	ENGINE INSTALLATION EMR5 WITH SAUER PUMPS AND STEEL HOODS WITH COLD WEATHER PLUS PACKAGE	B
1	0100011	AR	Compound, Locking	
2	0100079	AR	Sealant, Pipe	
3	0641408	10	Bolt 1/4 x 1	
4	0641410	4	Bolt 1/4 x 1-1/4	
5	0641511	1	Bolt 5/16 x 1-3/8	
6	0641605	3	Bolt 3/8 x 5/8	
7	0641606	4	Bolt 3/8 x 3/4	
8	0641608	5	Bolt 3/8 x 1	
9	0641610	1	Bolt 3/8 x 1-1/4	
10	0641612	2	Bolt 3/8 x 1-1/2	
11	0641708	1	Bolt 7/16 x 1	
12	0641808	1	Bolt 1/2 x 1	
13	0642010	1	Bolt 5/8 x 1-1/4	
14	0761210	1	Bolt M12 x 20	
15	1320022	3	Clamp	
16	1320187	1	Clamp	
17	1320190	1	Clamp	
18	1671121	1	Cover	
19	2180832	1	Fitting, Barbed	
20	2220313	2	Fitting, 90 NPTF/Barbed	
21	2750532	5 ft /1.6 m	Hose	
22	3311405	10	Nut 1/4	
23	3311605	2	Nut 3/8	
24	3311705	1	Nut 7/16	
25	3422446	1	Pin	
26	3520054	1	Plug	
27	3841143	1	Keeper, Pin	
28	4240018	AR	Tie-Strap (Not Shown)	
29	4711400	24	Washer 1/4	
30	4711600	16	Washer 3/8	
31	4711700	2	Washer 7/16	
32	4752000	1	Washer 5/8	
33	4812100	1	Washer M12	
34	8405006	2	Clamp	
35	1001108617	1	Filter	
35	70002231	1	Element, Filter	
36	1001110425	4	Spacer	
37	1001116792	1	Clamp	
37	1321716	5	Clamp	
38	1001131542	1	Lanyard	
39	1001138491	1	Harness, Fuel (Not Shown) (See Separate Breakdown in ELECTRICAL Section)	
40	1001140604	1	Panel	
41	1001141225	1	Battery Cable Kit	
41A	7027042	1	Cable, Battery (Red) (Battery + to Relays and Starter)	
41B	7027043	1	Cable, Battery (Black) (Battery - to Tray Pivot Grd and Aux Pump)	

SECTION 3 - ENGINE

ITEM	PART NUMBER	QTY	DESCRIPTION	REV
41C	7027044	1	Cable (Red) (Aux Relay to Aux Pump)	
41D	7027045	1	Cable, Battery (Black) (Engine to Tray Pivot Grd)	
42	1001145089	1	Clamp	
43	1001145842	1	Plate	
44	1001154405	2 ft /0.6 m	Hose	
45	1001302757	1	Engine Sub-Assembly (See Separate Breakdown in this Section)	
46	4460234	AR	Mount, Terminal (Not Shown)	

FIGURE 3-47. DEUTZ D2.9L4 - EMR5 ENGINE INSTALLATION WITH SAUER PUMPS AND STEEL HOODS (WITHOUT COLD WEATHER PLUS PACKAGE)

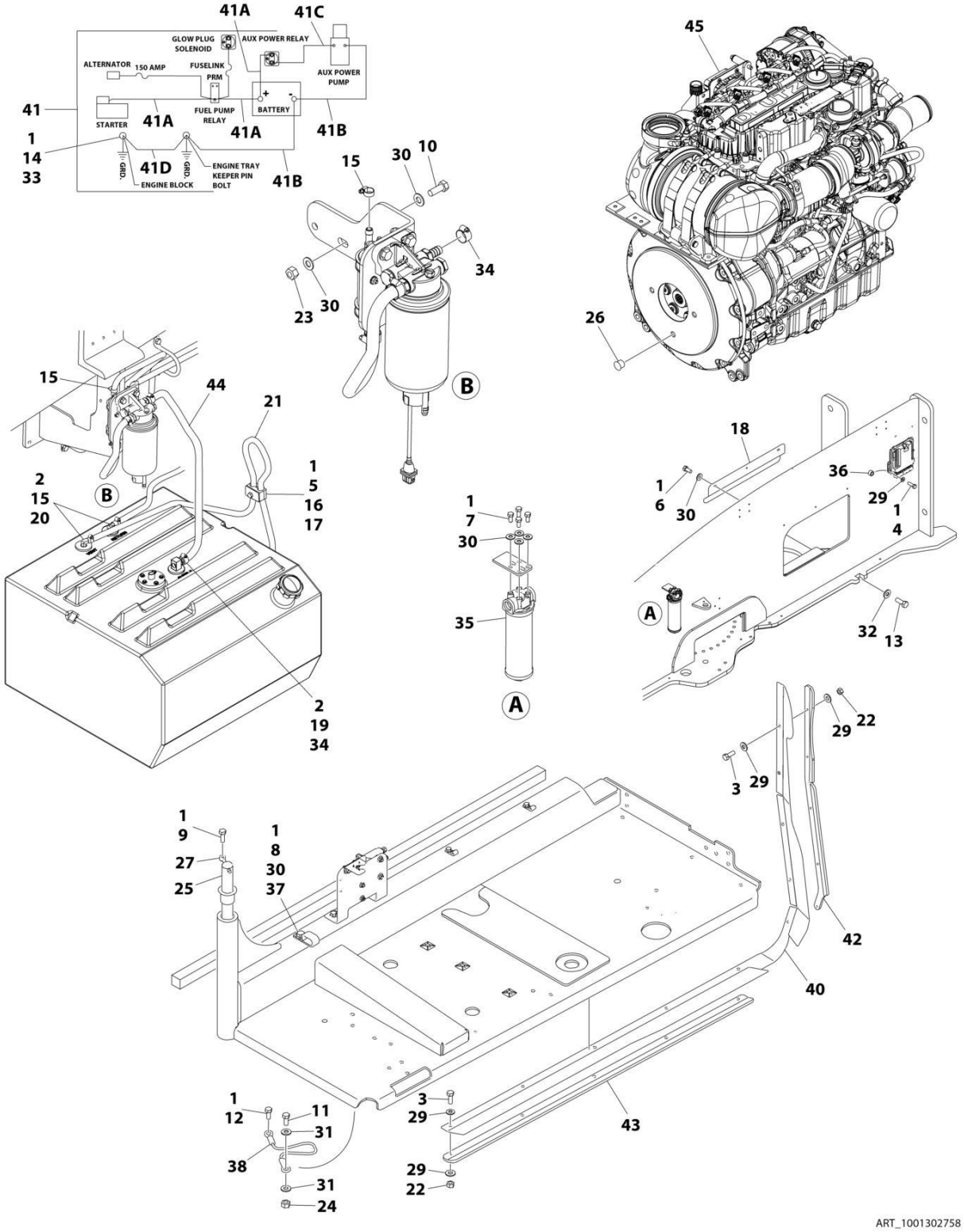

FIGURE 3-47. DEUTZ D2.9L4 - EMR5 ENGINE INSTALLATION WITH SAUER PUMPS AND STEEL HOODS (WITHOUT COLD WEATHER PLUS PACKAGE)

ITEM	PART NUMBER	QTY	DESCRIPTION	REV
	1001302758	Ref	ENGINE INSTALLATION EMR5 WITH SAUER PUMPS AND STEEL HOODS WITHOUT COLD WEATHER PLUS PACKAGE	B
1	0100011	AR	Compound, Locking	
2	0100079	AR	Sealant, Pipe	
3	0641408	10	Bolt 1/4 x 1	
4	0641410	4	Bolt 1/4 x 1-1/4	
5	0641511	1	Bolt 5/16 x 1-3/8	
6	0641605	3	Bolt 3/8 x 5/8	
7	0641606	4	Bolt 3/8 x 3/4	
8	0641608	5	Bolt 3/8 x 1	
9	0641610	1	Bolt 3/8 x 1-1/4	
10	0641612	2	Bolt 3/8 x 1-1/2	
11	0641708	1	Bolt 7/16 x 1	
12	0641808	1	Bolt 1/2 x 1	
13	0642010	1	Bolt 5/8 x 1-1/4	
14	0761210	1	Bolt M12 x 20	
15	1320022	3	Clamp	
16	1320187	1	Clamp	
17	1320190	1	Clamp	
18	1671121	1	Cover	
19	2180832	1	Fitting, Barbed	
20	2220313	2	Fitting, 90 NPTF/Barbed	
21	2750532	5 ft /1.6 m	Hose	
22	3311405	10	Nut 1/4	
23	3311605	2	Nut 3/8	
24	3311705	1	Nut 7/16	
25	3422446	1	Pin	
26	3520054	1	Plug	
27	3841143	1	Keeper, Pin	
28	4240018	AR	Tie-Strap (Not Shown)	
29	4711400	24	Washer 1/4	
30	4711600	16	Washer 3/8	
31	4711700	2	Washer 7/16	
32	4752000	1	Washer 5/8	
33	4812100	1	Washer M12	
34	8405006	2	Clamp	
35	1001108617	1	Filter	
35	70002231	1	Element, Filter	
36	1001110425	4	Spacer	
37	1001116792	1	Clamp	
37	1321716	5	Clamp	
38	1001131542	1	Lanyard	
39	1001138491	1	Harness, Fuel (Not Shown) (See Separate Breakdown in ELECTRICAL Section)	
40	1001140604	1	Panel	
41	1001141225	1	Battery Cable Kit	
41A	7027042	1	Cable, Battery (Red) (Battery + to Relays and Starter)	
41B	7027043	1	Cable, Battery (Black) (Battery - to Tray Pivot Grd and Aux Pump)	

SECTION 3 - ENGINE

ITEM	PART NUMBER	QTY	DESCRIPTION	REV
41C	7027044	1	Cable (Red) (Aux Relay to Aux Pump)	
41D	7027045	1	Cable, Battery (Black) (Engine to Tray Pivot Grd)	
42	1001145089	1	Clamp	
43	1001145842	1	Plate	
44	1001154405	2 ft /0.6 m	Hose	
45	1001302756	1	Engine Sub-Assembly (See Separate Breakdown in this Section)	
46	4460234	AR	TERMINAL	

FIGURE 3-48. DEUTZ D2.9L4 - EMR5 ENGINE INSTALLATION WITH SAUER PUMPS AND ABS HOODS (WITHOUT COLD WEATHER PLUS PACKAGE)

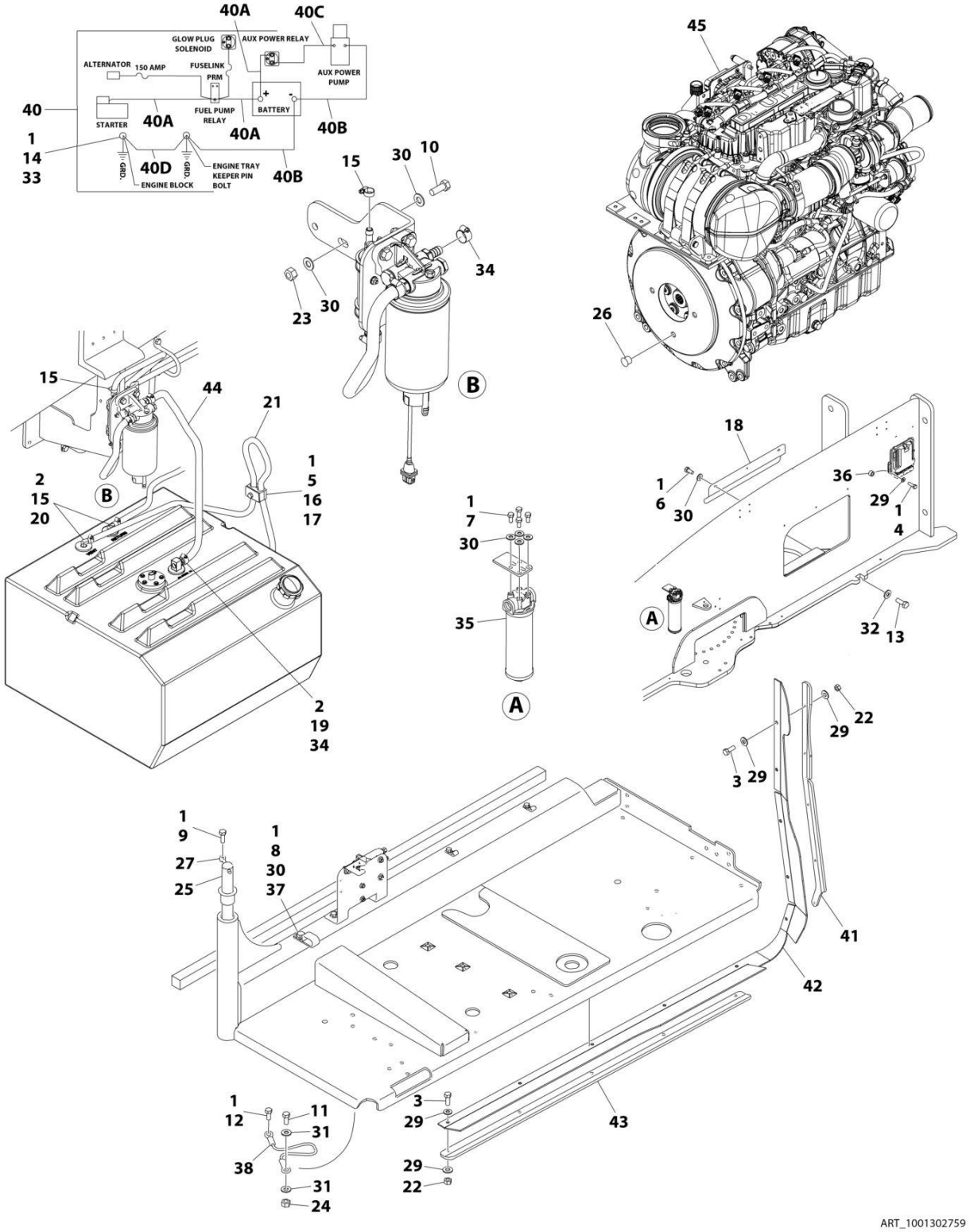

FIGURE 3-48. DEUTZ D2.9L4 - EMR5 ENGINE INSTALLATION WITH SAUER PUMPS AND ABS HOODS (WITHOUT COLD WEATHER PLUS PACKAGE)

ITEM	PART NUMBER	QTY	DESCRIPTION	REV
	1001302759	Ref	ENGINE INSTALLATION EMR5 WITH SAUER PUMPS AND ABS HOODS WITHOUT COLD WEATHER PLUS PACKAGE	B
1	0100011	AR	Compound, Locking	
2	0100079	AR	Sealant, Pipe	
3	0641408	10	Bolt 1/4 x 1	
4	0641410	4	Bolt 1/4 x 1-1/4	
5	0641511	1	Bolt 5/16 x 1-3/8	
6	0641605	3	Bolt 3/8 x 5/8	
7	0641606	4	Bolt 3/8 x 3/4	
8	0641608	5	Bolt 3/8 x 1	
9	0641610	1	Bolt 3/8 x 1-1/4	
10	0641612	2	Bolt 3/8 x 1-1/2	
11	0641708	1	Bolt 7/16 x 1	
12	0641808	1	Bolt 1/2 x 1	
13	0642010	1	Bolt 5/8 x 1-1/4	
14	0761210	1	Bolt M12 x 20	
15	1320022	3	Clamp	
16	1320187	1	Clamp	
17	1320190	1	Clamp	
18	1671121	1	Cover	
19	2180832	1	Fitting, Barbed	
20	2220313	2	Fitting, 90 NPTF/Barbed	
21	2750532	5 ft /1.6 m	Hose	
22	3311405	10	Nut 1/4	
23	3311605	2	Nut 3/8	
24	3311705	1	Nut 7/16	
25	3422446	1	Pin	
26	3520054	1	Plug	
27	3841143	1	Keeper, Pin	
28	4240018	AR	Tie-Strap (Not Shown)	
29	4711400	24	Washer 1/4	
30	4711600	16	Washer 3/8	
31	4711700	2	Washer 7/16	
32	4752000	1	Washer 5/8	
33	4812100	1	Washer M12	
34	8405006	2	Clamp	
35	1001108617	1	Filter	
35	70002231	1	Element, Filter	
36	1001110425	4	Spacer	
37	1001116792	1	Clamp	
37	1321716	5	Clamp	
38	1001131542	1	Lanyard	
39	1001138491	1	Harness, Fuel (Not Shown) (See Separate Breakdown in ELECTRICAL Section)	
40	1001141225	1	Battery Cable Kit	
40A	7027042	1	Cable, Battery (Red) (Battery + to Relays and Starter)	
40B	7027043	1	Cable, Battery (Black) (Battery - to Tray Pivot Grd and Aux Pump)	
40C	7027044	1	Cable (Red) (Aux Relay to Aux Pump)	

SECTION 3 - ENGINE

ITEM	PART NUMBER	QTY	DESCRIPTION	REV
40D	7027045	1	Cable, Battery (Black) (Engine to Tray Pivot Grd)	
41	1001145089	1	Clamp	
42	1001145560	1	Panel	
43	1001145842	1	Plate	
44	1001154405	2 ft /0.6 m	Hose	
45	1001302756	1	Engine Sub-Assembly (See Separate Breakdown in this Section)	
46	4460234	AR	Mount, Terminal (Not Shown)	

FIGURE 3-49. DEUTZ D2.9L4 - EMR5 ENGINE SUB-ASSEMBLY WITH PMP PUMPS (WITH COLD WEATHER PLUS PACKAGE)

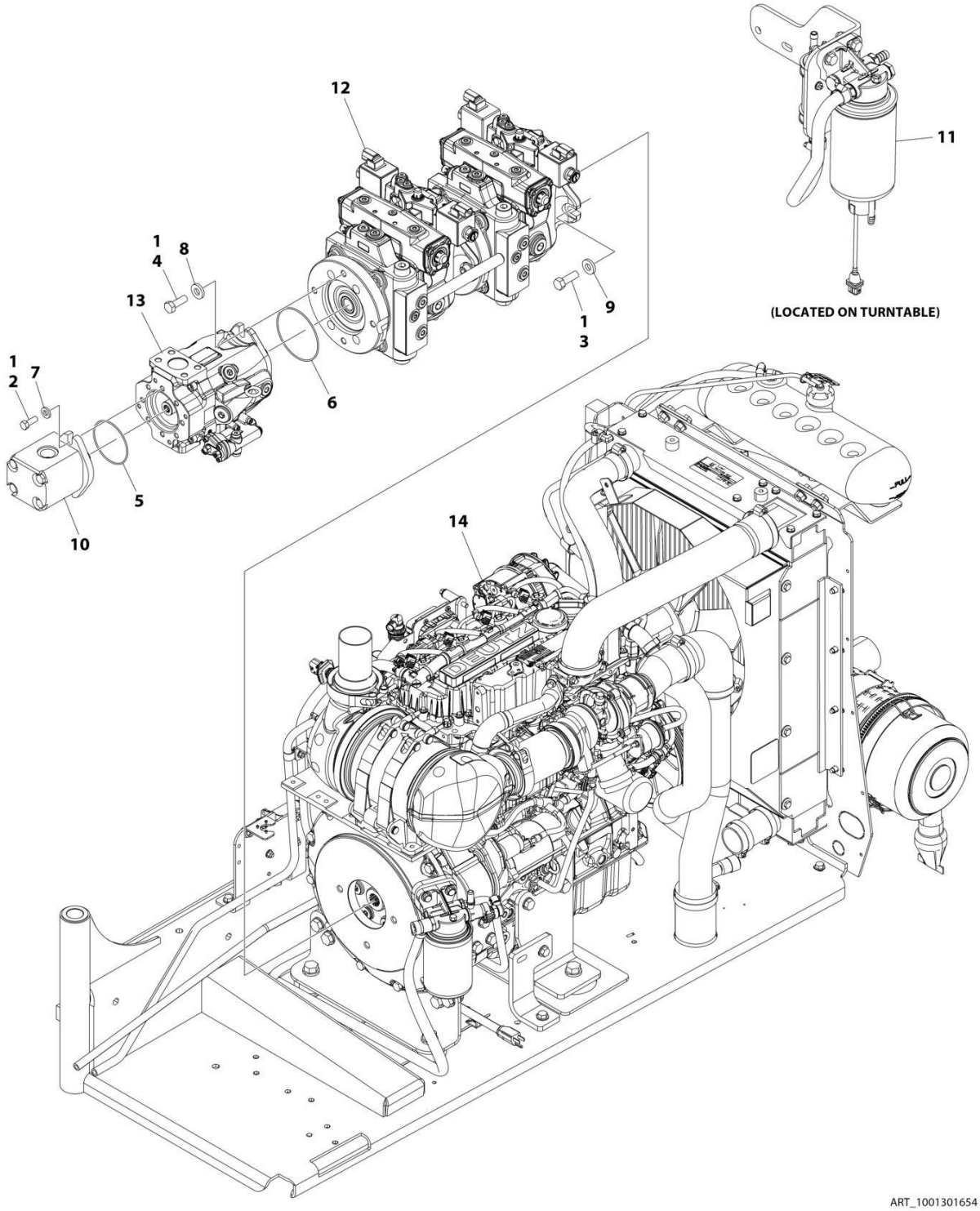

FIGURE 3-49. DEUTZ D2.9L4 - EMR5 ENGINE SUB-ASSEMBLY WITH PMP PUMPS (WITH COLD WEATHER PLUS PACKAGE)

ITEM	PART NUMBER	QTY	DESCRIPTION	REV
	1001301654	Ref	ENGINE SUB-ASSEMBLY EMR5 WITH PMP PUMPS (WITH COLD WEATHER PLUS PACKAGE)	B
1	0100011	AR	Compound, Locking	
2	0641608	2	Bolt 3/8 x 1	
3	0641812	2	Bolt 1/2 x 1-1/2	
4	0761215	2	Bolt M12 x 35	
5	3790152	1	O-Ring	
6	3790155	1	O-Ring	
7	4891600	2	Washer 3/8	
8	4891800	2	Washer 1/2	
9	8310056	2	Washer	
10	1001112927	1	Pump Assembly - Sauer Gear (See Separate Breakdown in this Section)	
11	1001165101	1	Bracket, Fuel Pump Filter Assembly (See Separate Breakdown in this Section)	
12	1001286957	1	Pump Assembly - Hydraulic Tandem (See Separate Breakdown in this Section)	
13	1001286958	1	Pump Assembly - Hydraulic Piston (See Separate Breakdown in this Section)	
14	1001301590	1	Engine Assembly (See Separate Breakdown in this Section)	

FIGURE 3-50. DEUTZ D2.9L4 - EMR5 ENGINE SUB-ASSEMBLY WITH PMP PUMPS (WITHOUT COLD WEATHER PLUS PACKAGE)

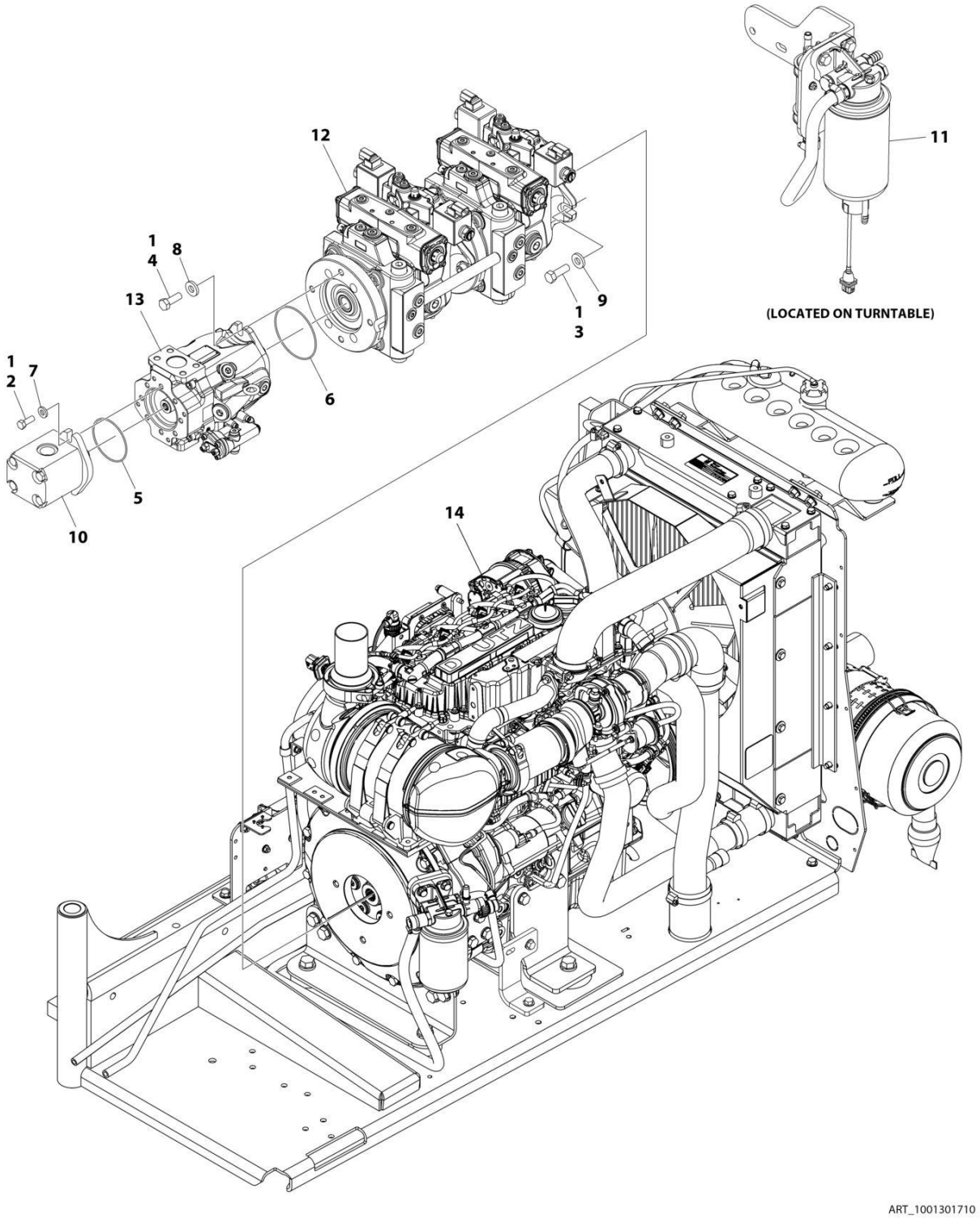

FIGURE 3-50. DEUTZ D2.9L4 - EMR5 ENGINE SUB-ASSEMBLY WITH PMP PUMPS (WITHOUT COLD WEATHER PLUS PACKAGE)

ITEM	PART NUMBER	QTY	DESCRIPTION	REV
	1001301710	Ref	ENGINE SUB-ASSEMBLY EMR5 WITH PMP PUMPS (WITHOUT COLD WEATHER PLUS PACKAGE)	B
1	0100011	AR	Compound, Locking	
2	0641608	2	Bolt 3/8 x 1	
3	0641812	2	Bolt 1/2 x 1-1/2	
4	0761215	2	Bolt M12 x 35	
5	3790152	1	O-Ring	
6	3790155	1	O-Ring	
7	4891600	2	Washer 3/8	
8	4891800	2	Washer 1/2	
9	8310056	2	Washer	
10	1001112927	1	Pump Assembly - Sauer Gear (See Separate Breakdown in this Section)	
11	1001165101	1	Bracket, Fuel Pump Filter Assembly (See Separate Breakdown in this Section)	
12	1001286957	1	Pump Assembly - Hydraulic Tandem (See Separate Breakdown in this Section)	
13	1001286958	1	Pump Assembly - Hydraulic Piston (See Separate Breakdown in this Section)	
14	1001301546	1	Engine Assembly (See Separate Breakdown in this Section)	

FIGURE 3-51. DEUTZ D2.9L4 - EMR5 ENGINE SUB-ASSEMBLY WITH REXROTH PUMPS (WITH COLD WEATHER PLUS PACKAGE)

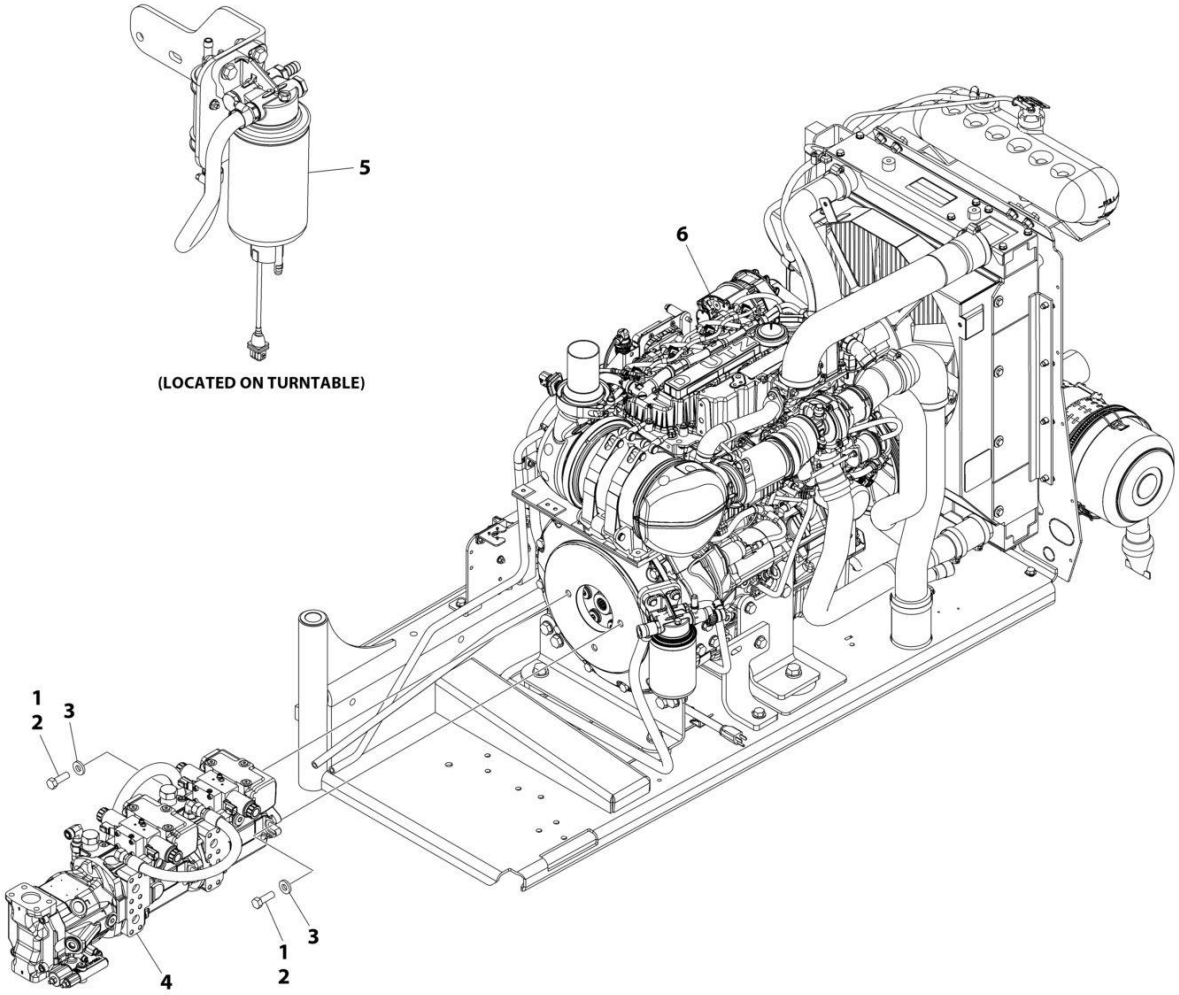

FIGURE 3-51. DEUTZ D2.9L4 - EMR5 ENGINE SUB-ASSEMBLY WITH REXROTH PUMPS (WITH COLD WEATHER PLUS PACKAGE)

ITEM	PART NUMBER	QTY	DESCRIPTION	REV
	1001301672	Ref	ENGINE SUB-ASSEMBLY EMR5 WITH REXROTH PUMPS (WITH COLD WEATHER PLUS PACKAGE)	B
1	0100011	AR	Compound, Locking	
2	0641814	2	Bolt 1/2 x 1-3/4	
3	4740171	2	Washer	
4	1001152963	1	Pump Assembly - Rexroth (See Separate Breakdown in this Section)	
5	1001165101	1	Bracket, Fuel Pump Filter Assembly (See Separate Breakdown in this Section)	
6	1001301590	1	Engine Assembly (See Separate Breakdown in this Section)	

FIGURE 3-52. DEUTZ D2.9L4 - EMR5 ENGINE SUB-ASSEMBLY WITH REXROTH PUMPS (WITHOUT COLD WEATHER PLUS PACKAGE)

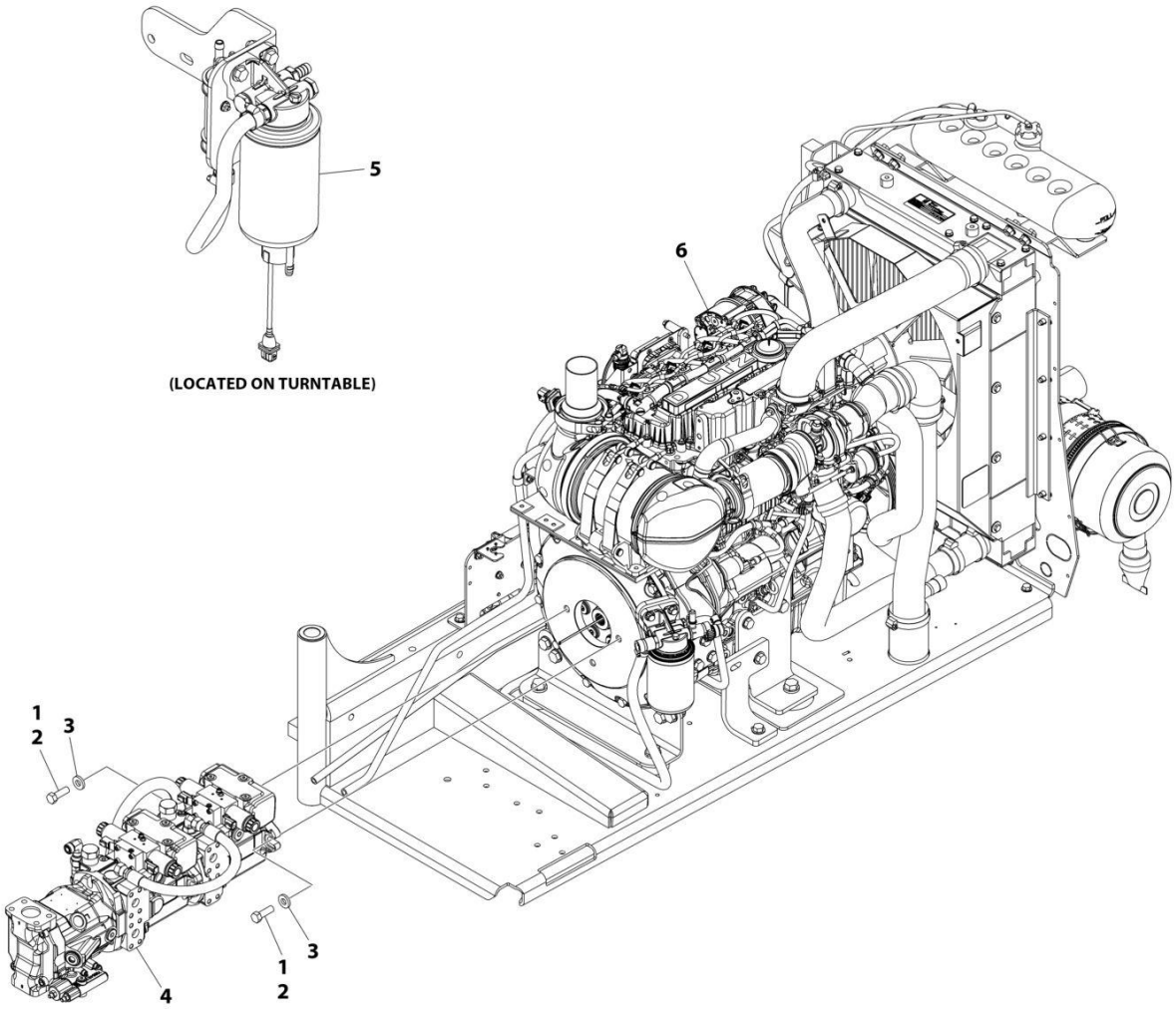

FIGURE 3-52. DEUTZ D2.9L4 - EMR5 ENGINE SUB-ASSEMBLY WITH REXROTH PUMPS (WITHOUT COLD WEATHER PLUS PACKAGE)

ITEM	PART NUMBER	QTY	DESCRIPTION	REV
	1001301713	Ref	ENGINE SUB-ASSEMBLY EMR5 WITH REXROTH PUMPS (WITHOUT COLD WEATHER PLUS PACKAGE)	B
1	0100011	AR	Compound, Locking	
2	0641814	2	Bolt 1/2 x 1-3/4	
3	4891800	2	Washer 1/2	
4	1001152963	1	Pump Assembly - Rexroth (See Separate Breakdown in this Section)	
5	1001165101	1	Bracket, Fuel Pump Filter Assembly (See Separate Breakdown in this Section)	
6	1001301546	1	Engine Assembly (See Separate Breakdown in this Section)	

FIGURE 3-53. DEUTZ D2.9L4 - EMR5 ENGINE SUB-ASSEMBLY WITH SAUER PUMPS (WITH COLD WEATHER PLUS PACKAGE)

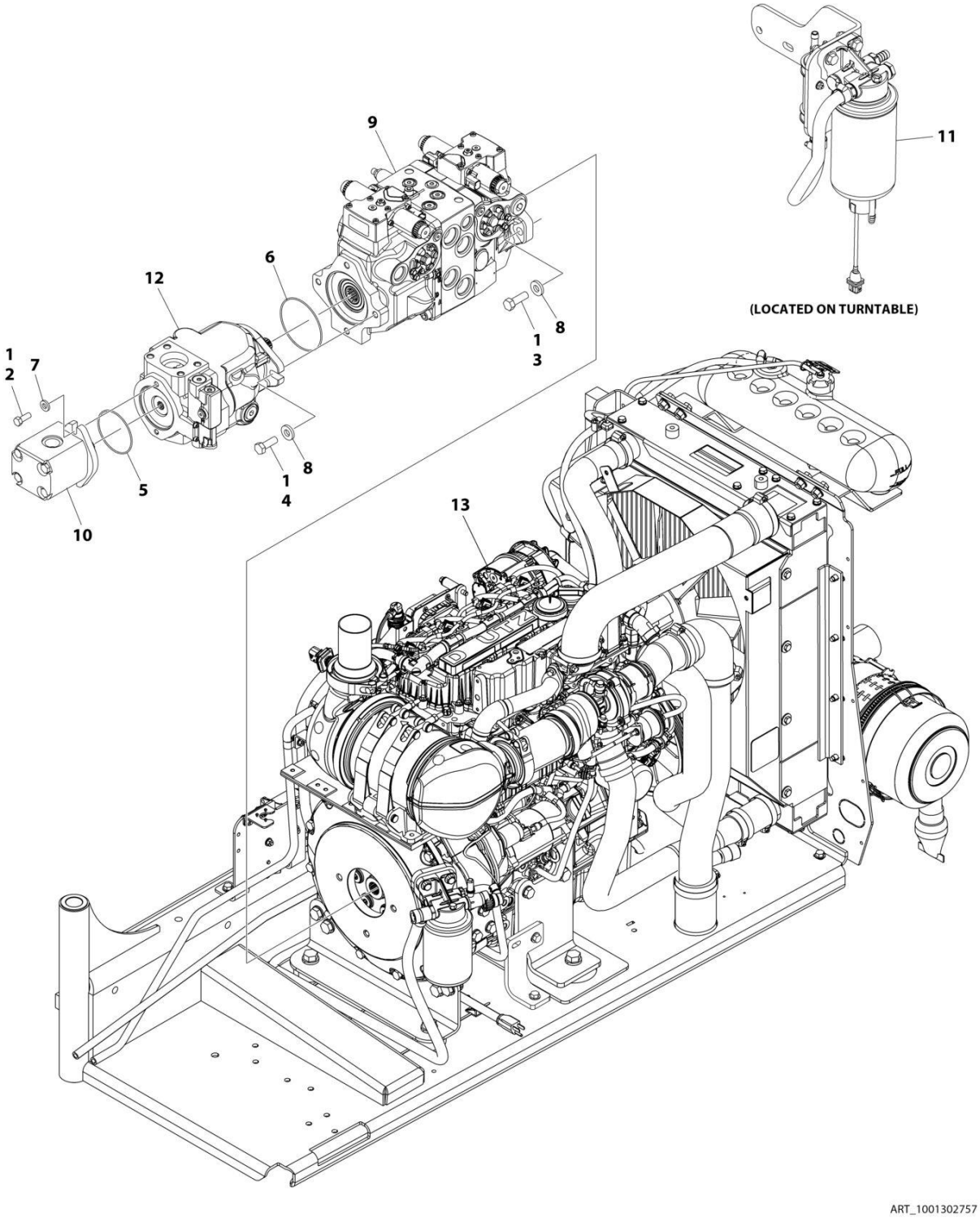

FIGURE 3-53. DEUTZ D2.9L4 - EMR5 ENGINE SUB-ASSEMBLY WITH SAUER PUMPS (WITH COLD WEATHER PLUS PACKAGE)

ITEM	PART NUMBER	QTY	DESCRIPTION	REV
	1001302757	Ref	ENGINE SUB-ASSEMBLY EMR5 WITH SAUER PUMPS (WITH COLD WEATHER PLUS PACKAGE)	B
1	0100011	AR	Compound, Locking	
2	0641608	2	Bolt 3/8 x 1	
3	0641812	2	Bolt 1/2 x 1-1/2	
4	0761215	2	Bolt M12 x 35	
5	3790152	1	O-Ring	
6	3790155	1	O-Ring	
7	4891600	2	Washer 3/8	
8	4891800	4	Washer 1/2	
9	1001108616	1	Pump Assembly - Sauer Tandem (See Separate Breakdown in this Section)	
10	1001112927	1	Pump Assembly - Sauer Gear (See Separate Breakdown in this Section)	
11	1001165101	1	Bracket, Fuel Pump Filter Assembly (See Separate Breakdown in this Section)	
12	1001171095	1	Pump Assembly - Sauer Piston (See Separate Breakdown in this Section)	
13	1001301590	1	Engine Assembly (See Separate Breakdown in this Section)	

FIGURE 3-54. DEUTZ D2.9L4 - EMR5 ENGINE SUB-ASSEMBLY WITH SAUER PUMPS (WITHOUT COLD WEATHER PLUS PACKAGE)

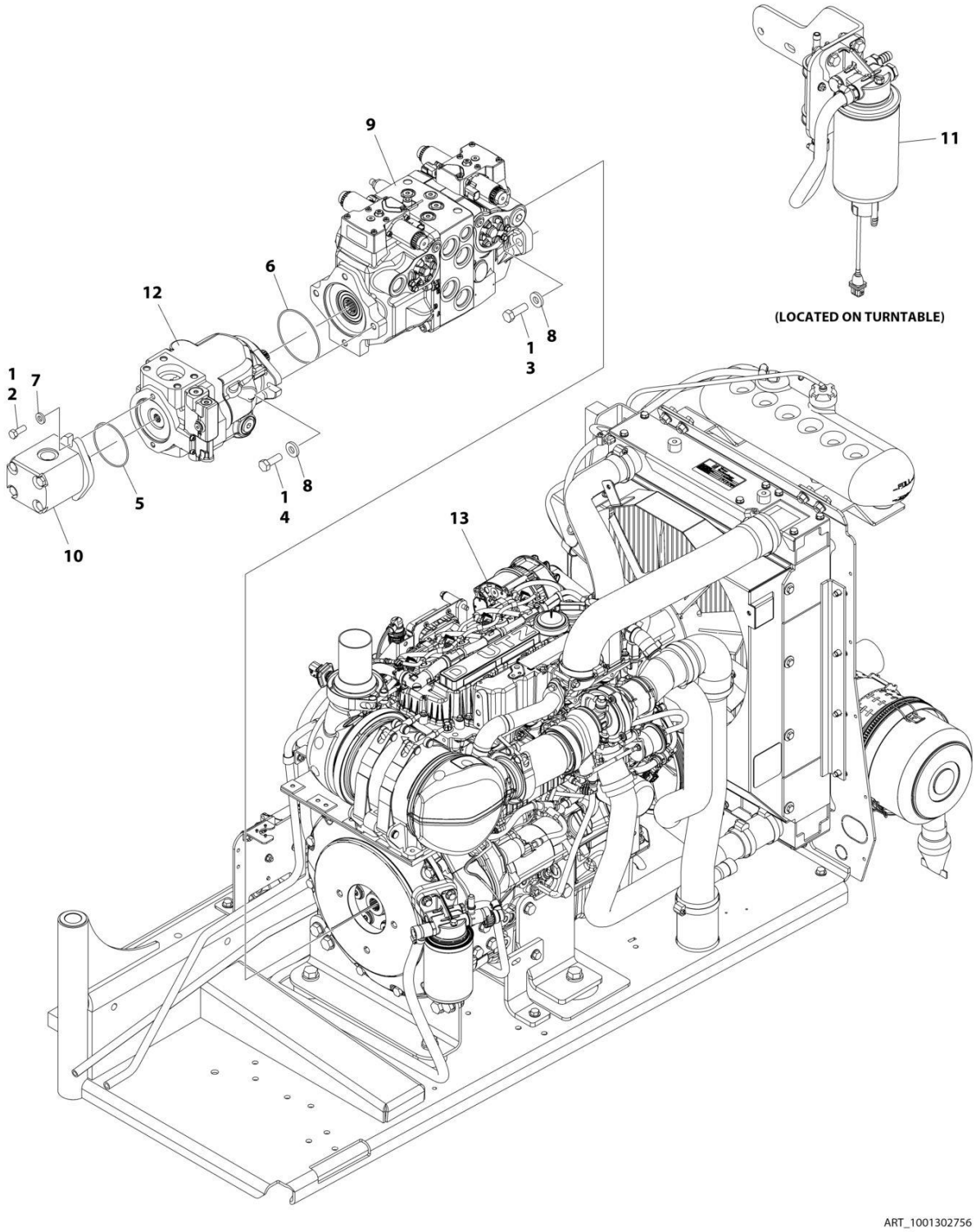

FIGURE 3-54. DEUTZ D2.9L4 - EMR5 ENGINE SUB-ASSEMBLY WITH SAUER PUMPS (WITHOUT COLD WEATHER PLUS PACKAGE)

ITEM	PART NUMBER	QTY	DESCRIPTION	REV
	1001302756	Ref	ENGINE SUB-ASSEMBLY EMR5 WITH SAUER PUMPS (WITHOUT COLD WEATHER PLUS PACKAGE)	B
1	0100011	AR	Compound, Locking	
2	0641608	2	Bolt 3/8 x 1	
3	0641812	2	Bolt 1/2 x 1-1/2	
4	0761215	2	Bolt M12 x 35	
5	3790152	1	O-Ring	
6	3790155	1	O-Ring	
7	4891600	2	Washer 3/8	
8	4891800	4	Washer 1/2	
9	1001108616	1	Pump Assembly - Sauer Tandem (See Separate Breakdown in this Section)	
10	1001112927	1	Pump Assembly - Sauer Gear (See Separate Breakdown in this Section)	
11	1001165101	1	Bracket, Fuel Pump Filter Assembly (See Separate Breakdown in this Section)	
12	1001171095	1	Pump Assembly - Sauer Piston (See Separate Breakdown in this Section)	
13	1001301546	1	Engine Assembly (See Separate Breakdown in this Section)	

SECTION 3 - ENGINE

FIGURE 3-55. DEUTZ D2.9L4 - EMR5 ENGINE ASSEMBLY (WITH COLD WEATHER PLUS PACKAGE)

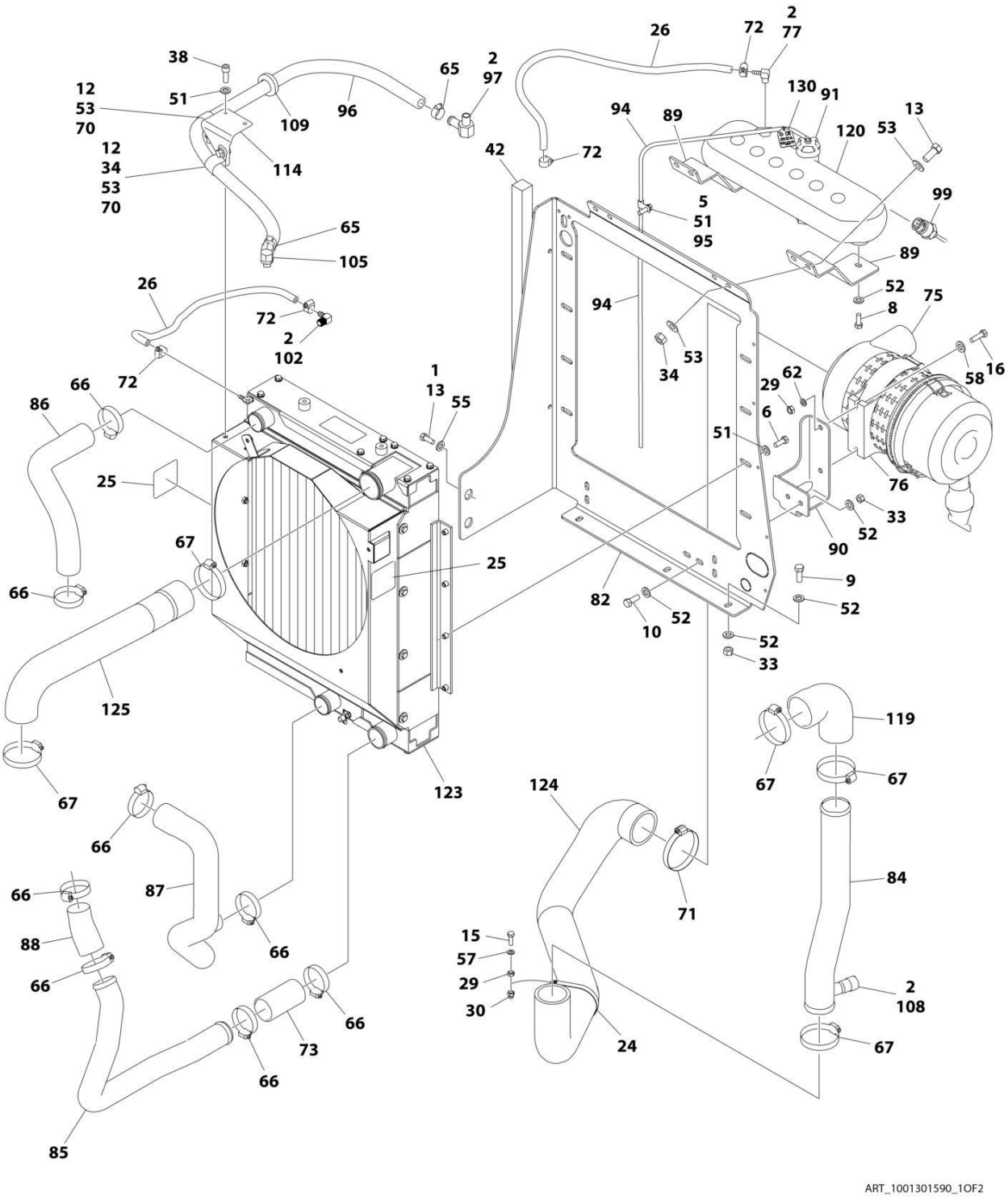

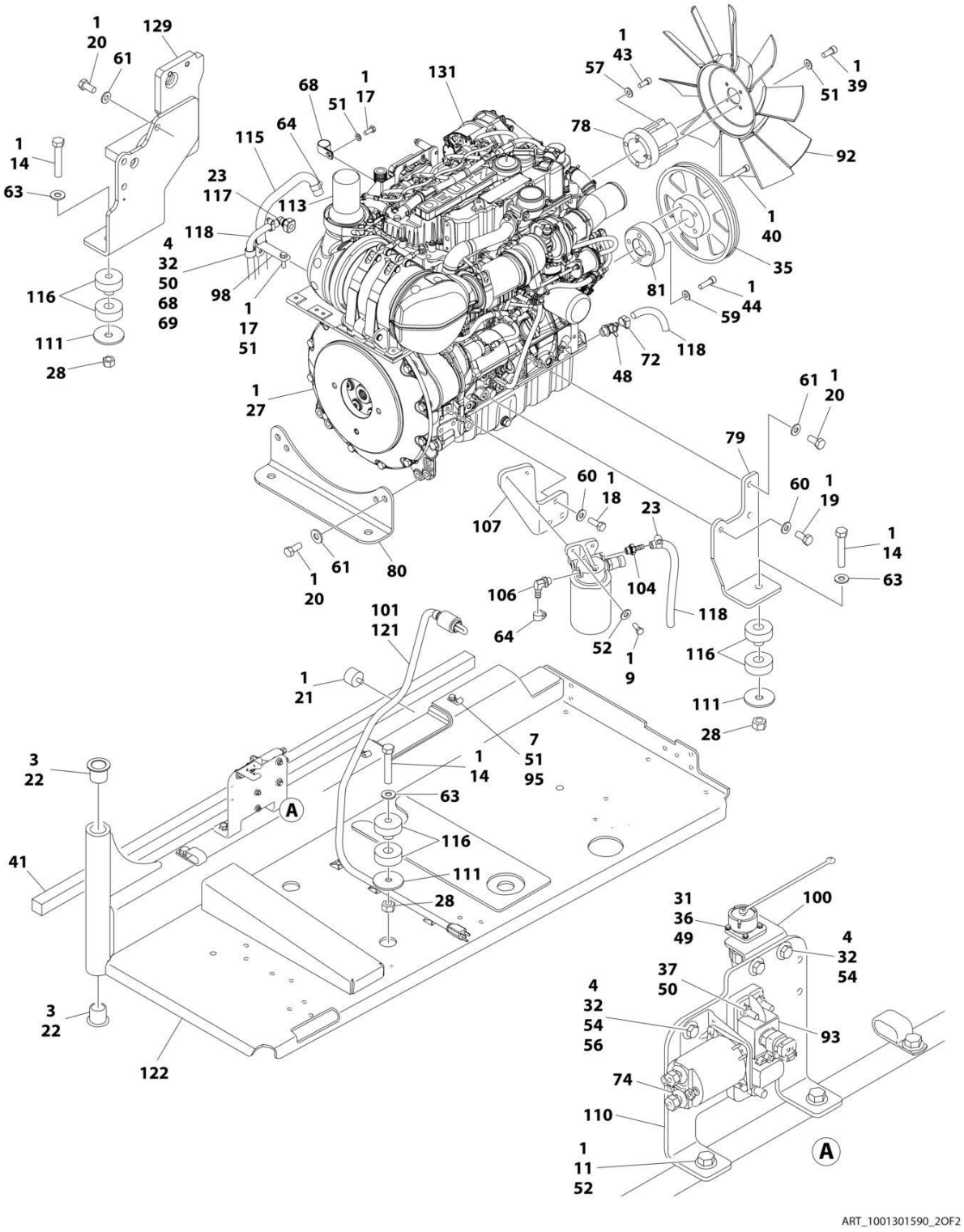
ART_1001301590_2OF2

FIGURE 3-55. DEUTZ D2.9L4 - EMR5 ENGINE ASSEMBLY (WITH COLD WEATHER PLUS PACKAGE)

ITEM	PART NUMBER	QTY	DESCRIPTION	REV
	1001301590	Ref	TCD2.9L4 EMR5 ENGINE ASSEMBLY (WITH COLD WEATHER PLUS PACKAGE)	B
1	0100011	AR	Compound, Locking	
2	0100020	AR	Sealant, Pipe	
3	0100062	AR	Adhesive	
4	0641406	5	Bolt 1/4 x 3/4	
5	0641503	1	Bolt 5/16 x 3/8	
6	0641508	8	Bolt 5/16 x 1	
7	0641510	2	Bolt 5/16 x 1-1/4	
8	0641606	2	Bolt 3/8 x 3/4	
9	0641608	9	Bolt 3/8 x 1	
10	0641610	2	Bolt 3/8 x 1-1/4	
11	0641612	2	Bolt 3/8 x 1-1/2	
12	0641706	2	Bolt 7/16 x 3/4	
13	0641708	6	Bolt 7/16 x 1	
14	0682028	4	Bolt 5/8 x 3-1/2	
15	0700812	1	Bolt M8 x 25	
16	0700815	2	Bolt M8 x 35	
17	0760810	2	Bolt M8 x 20	
18	0761214	3	Bolt M12 x 30	
19	0771212	1	Bolt M12 x 25	
20	0771414	9	Bolt M14 x 30	
21	0940070	1	Bumper	
22	0961986	2	Bearing	
23	1320022	2	Clamp	
24	1321289	1	Clamp	
25	1703162	2	Decal - Fan Blade	
26	2720015	5 ft /1.5 m	Hose	
27	2902065	1	Pump Coupling Kit (See Separate Breakdown in this Section)	
28	3272001	4	Nut 5/8	
29	3290801	3	Nut M8	
30	3290806	1	Nut M8	
31	3310401	3	Nut #4	
32	3311405	6	Nut 1/4	
33	3311605	9	Nut 3/8	
34	3311705	5	Nut 7/16	
35	3580320	1	Pulley	
36	3910408	3	Screw #4 x 1/2	
37	3931432	1	Capscrew 1/4 x 2	
38	3931508	2	Capscrew 5/16 x 1/2	
39	3931512	4	Capscrew 5/16 x 3/4	
40	3931628	4	Capscrew 3/8 x 1-3/4	
41	3960543	1	Seal	
42	3960544	1	Seal	
43	4031914	4	Bolt M8 x 50	
44	4032014	4	Bolt M10 x 50	
45	4240032	AR	Tie-Strap (Not Shown)	
46	4240099	AR	Tie-Strap (Not Shown)	
47	4460234	3	Mount, Tie-Strap (Not Shown)	
48	4640751	1	Valve, Oil Drain	

ITEM	PART NUMBER	QTY	DESCRIPTION	REV
49	4710400	3	Washer #4	
50	4711400	3	Washer 1/4	
51	4711500	19	Washer 5/16	
52	4711600	24	Washer 3/8	
53	4711700	10	Washer 7/16	
54	4751400	8	Washer 1/4	
55	4751700	2	Washer 7/16	
56	4791400	2	Washer, Star 1/4	
57	4811900	5	Washer M8	
58	4811902	2	Washer M8	
59	4812000	4	Washer M10	
60	4812100	4	Washer M12	
61	4812200	9	Washer M14	
62	4831900	2	Washer M8	
63	4892000	4	Washer 5/8	
64	8405006	2	Clamp	
65	8405007	2	Clamp	
66	8405201	8	Clamp	
67	8405204	5	Clamp	
68	8406102	2	Clip	
69	8406112	1	Clip	
70	8406302	2	Clamp	
71	8410011	1	Clamp	
72	8410013	5	Clamp	
73	91563070	1	Coupling, Rubber	
74	1001117308	1	Relay	
75	1001133633	1	Filter, Air	
75	70024190	1	Element, Filter	
76	1001133634	1	Clamp	
77	1001134488	1	Fitting, 90 Barbed	
78	1001135138	1	Spacer, Fan	
79	1001135560	1	Support	
80	1001135562	1	Support	
81	1001135679	1	Spacer, Pulley	
82	1001135680	1	Support	
83	1001135779	1	Cable, Alternator (Not Shown)	
84	1001135901	1	Pipe	
85	1001135913	1	Pipe	
86	1001135924	1	Hose (Upper)	
87	1001135926	1	Hose (Lower)	
88	1001135943	1	Coupling, Rubber	
89	1001136626	2	Bracket	
90	1001136665	1	Bracket	
91	1001136834	1	Cap	
92	1001137276	1	Fan	
93	1001138228	1	Module, Power	
93	70023592	1	Fuse 20Amp	
93	70023593	1	Fuse 30Amp	
94	1001138248	4 ft /1.2 m	Tube	
95	1001138253	5	Clamp	
96	1001138524	1	Hose	

SECTION 3 - ENGINE

ITEM	PART NUMBER	QTY	DESCRIPTION	REV
97	1001138559	1	Fitting, 90	
98	1001138717	1	Bracket	
99	1001138827	1	Sensor	
100	1001139240	1	Bracket	
101	1001140312	1	Heater, Engine Block	
102	1001140564	1	Fitting, 90 Barbed	
103	1001141304	1	Wire, Glow Plug (Not Shown)	
104	1001141717	1	Fitting, Straight	
105	1001141719	1	Fitting, 90 Barbed	
106	1001142501	1	Fitting, 90 Barbed	
107	1001142685	1	Bracket	
108	1001143390	1	Indicator	
109	1001144089	1	Grommet	
110	1001145154	1	Plate	
111	1001146219	4	Washer	
112	1001148843	1	Harness, Fuel Filter (Not Shown) (See Separate Breakdown in ELECTRICAL Section)	
113	1001153024	1	Pipe, Exhaust	
114	1001153387	1	Plate	
115	1001154405	5 ft /1.6 m	Hose	
116	1001155575	4	Mount	
117	1001155823	1	Coupling, 90 Quick Connect	
118	1001165035	31 ft /10 m	Hose	
119	1001165820	1	Hose	
120	1001166393	1	Tank	
121	1001181895	AR	Adhesive	
122	1001191272	1	Support	
123	1001256864	1	Radiator	
124	1001264917	1	Hose	
125	1001264982	1	Hose	
126	1001276646	1	Harness, Engine (Not Shown) (See Separate Breakdown in ELECTRICAL Section)	
127	1001281985	1	Connector (Not Shown)	
128	1001281986	1	Connector (Not Shown)	
129	1001283008	1	Mount	
130	1001291401	1	Tag, Coolant	
131	1001301545	1	Engine Deutz TCD2.9L4 (EMR5) (See Separate Breakdown in this Section)	

FIGURE 3-56. DEUTZ D2.9L4 - EMR5 ENGINE ASSEMBLY (WITHOUT COLD WEATHER PLUS PACKAGE)

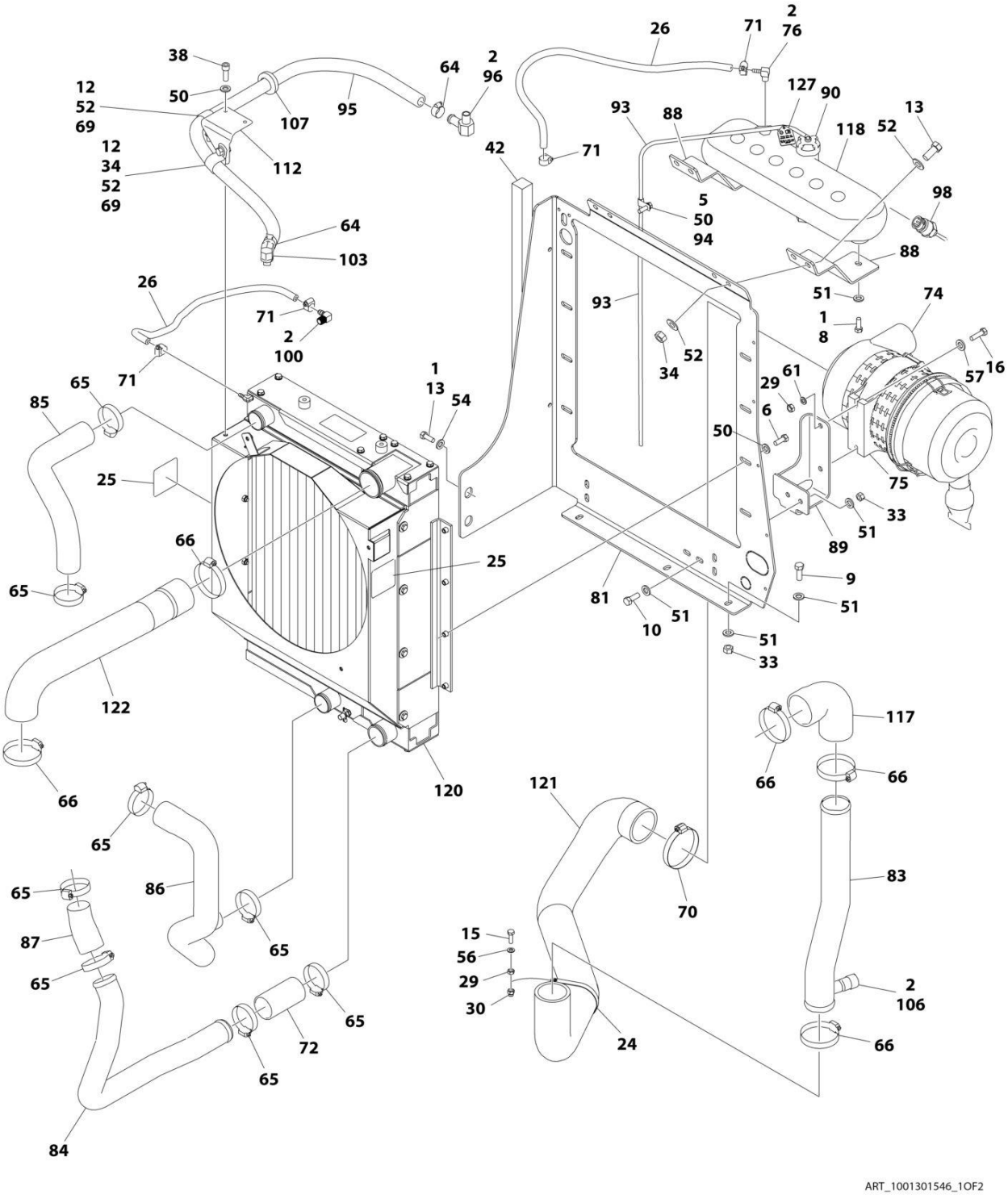

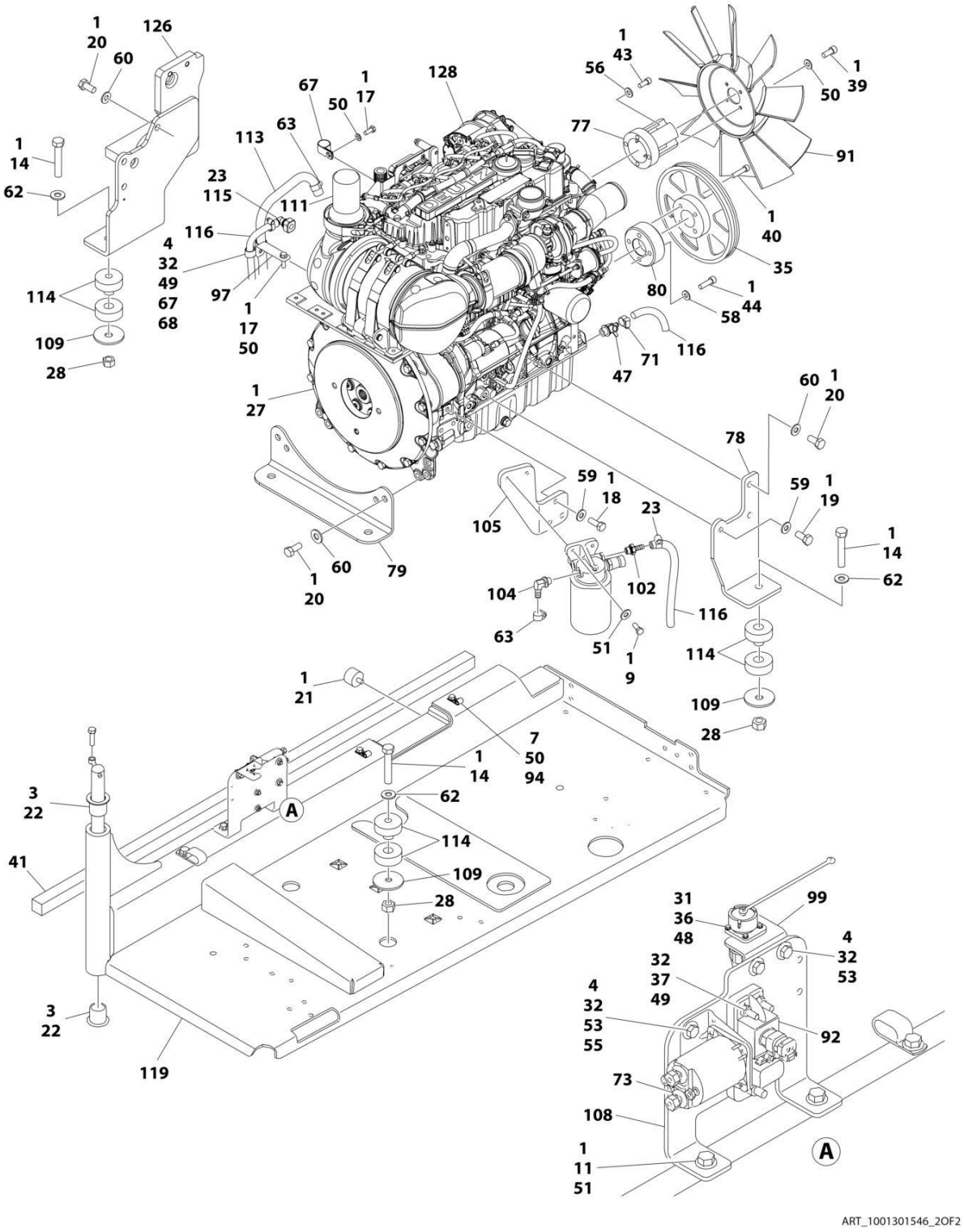

ART_1001301546_2OF2

FIGURE 3-56. DEUTZ D2.9L4 - EMR5 ENGINE ASSEMBLY (WITHOUT COLD WEATHER PLUS PACKAGE)

ITEM	PART NUMBER	QTY	DESCRIPTION	REV
	1001301546	Ref	TCD2.9L4 EMR5 ENGINE ASSEMBLY (WITHOUT COLD WEATHER PLUS PACKAGE)	B
1	0100011	AR	Compound, Locking	
2	0100020	AR	Sealant, Pipe	
3	0100062	AR	Adhesive	
4	0641406	5	Bolt 1/4 x 3/4	
5	0641503	1	Bolt 5/16 x 3/8	
6	0641508	8	Bolt 5/16 x 1	
7	0641510	2	Bolt 5/16 x 1-1/4	
8	0641606	2	Bolt 3/8 x 3/4	
9	0641608	9	Bolt 3/8 x 1	
10	0641610	2	Bolt 3/8 x 1-1/4	
11	0641612	2	Bolt 3/8 x 1-1/2	
12	0641706	2	Bolt 7/16 x 3/4	
13	0641708	6	Bolt 7/16 x 1	
14	0682028	4	Bolt 5/8 x 3-1/2	
15	0700812	1	Bolt M8 x 25	
16	0700815	2	Bolt M8 x 35	
17	0760810	2	Bolt M8 x 20	
18	0761214	3	Bolt M12 x 30	
19	0771212	1	Bolt M12 x 25	
20	0771414	9	Bolt M14 x 30	
21	0940070	1	Bumper	
22	0961986	2	Bearing	
23	1320022	2	Clamp	
24	1321289	1	Clamp	
25	1703162	2	Decal - Fan Blade	
26	2720015	5 ft /1.5 m	Hose	
27	2902065	1	Pump Coupling Kit (See Separate Breakdown in this Section)	
28	3272001	4	Nut 5/8	
29	3290801	3	Nut M8	
30	3290806	1	Nut M8	
31	3310401	3	Nut #4	
32	3311405	6	Nut 1/4	
33	3311605	9	Nut 3/8	
34	3311705	5	Nut 7/16	
35	3580320	1	Pulley	
36	3910408	3	Screw #4 x 1/2	
37	3931432	1	Capscrew 1/4 x 2	
38	3931508	2	Capscrew 5/16 x 1/2	
39	3931512	4	Capscrew 5/16 x 3/4	
40	3931628	4	Capscrew 3/8 x 1-3/4	
41	3960543	1	Seal	
42	3960544	1	Seal	
43	4031914	4	Bolt M8 x 50	
44	4032014	4	Bolt M10 x 50	
45	4240032	AR	Tie-Strap (Not Shown)	
46	4240099	AR	Tie-Strap (Not Shown)	
47	4640751	1	Valve, Oil Drain	

ITEM	PART NUMBER	QTY	DESCRIPTION	REV
48	4710400	3	Washer #4	
49	4711400	3	Washer 1/4	
50	4711500	19	Washer 5/16	
51	4711600	24	Washer 3/8	
52	4711700	10	Washer 7/16	
53	4751400	8	Washer 1/4	
54	4751700	2	Washer 7/16	
55	4791400	2	Washer, Star 1/4	
56	4811900	5	Washer M8	
57	4811902	2	Washer M8	
58	4812000	4	Washer M10	
59	4812100	4	Washer M12	
60	4812200	9	Washer M14	
61	4831900	2	Washer M8	
62	4892000	4	Washer 5/8	
63	8405006	2	Clamp	
64	8405007	2	Clamp	
65	8405201	8	Clamp	
66	8405204	5	Clamp	
67	8406102	2	Clip	
68	8406112	1	Clip	
69	8406302	2	Clamp	
70	8410011	1	Clamp	
71	8410013	5	Clamp	
72	91563070	1	Coupling, Rubber	
73	1001117308	1	Relay	
74	1001133633	1	Filter, Air	
74	70024190	1	Element, Filter	
75	1001133634	1	Clamp	
76	1001134488	1	Fitting, 90 Barbed	
77	1001135138	1	Spacer, Fan	
78	1001135560	1	Support	
79	1001135562	1	Support	
80	1001135679	1	Spacer, Pulley	
81	1001135680	1	Support	
82	1001135779	1	Cable, Alternator (Not Shown)	
83	1001135901	1	Pipe	
84	1001135913	1	Pipe	
85	1001135924	1	Hose (Upper)	
86	1001135926	1	Hose (Lower)	
87	1001135943	1	Coupling, Rubber	
88	1001136626	2	Bracket	
89	1001136665	1	Bracket	
90	1001136834	1	Cap	
91	1001137276	1	Fan	
92	1001138228	1	Module, Power	
92	70023592	1	Fuse 20Amp	
92	70023593	1	Fuse 30Amp	
93	1001138248	4 ft /1.2 m	Tube	
94	1001138253	5	Clamp	
95	1001138524	1	Hose	

SECTION 3 - ENGINE

ITEM	PART NUMBER	QTY	DESCRIPTION	REV
96	1001138559	1	Fitting, 90	
97	1001138717	1	Bracket	
98	1001138827	1	Sensor	
99	1001139240	1	Bracket	
100	1001140564	1	Fitting, 90 Barbed	
101	1001141304	1	Wire, Glow Plug (Not Shown)	
102	1001141717	1	Fitting, Straight	
103	1001141719	1	Fitting, 90 Barbed	
104	1001142501	1	Fitting, 90 Barbed	
105	1001142685	1	Bracket	
106	1001143390	1	Indicator	
107	1001144089	1	Grommet	
108	1001145154	1	Plate	
109	1001146219	4	Washer	
110	1001148843	1	Harness, Fuel Filter (Not Shown) (See Separate Breakdown in ELECTRICAL Section)	
111	1001153024	1	Pipe, Exhaust	
112	1001153387	1	Plate	
113	1001154405	5 ft /1.6 m	Hose	
114	1001155575	4	Mount	
115	1001155823	1	Coupling, 90 Quick Connect	
116	1001165035	31 ft /10 m	Hose	
117	1001165820	1	Hose	
118	1001166393	1	Tank	
119	1001191272	1	Support	
120	1001256864	1	Radiator	
121	1001264917	1	Hose	
122	1001264982	1	Hose	
123	1001276646	1	Harness, Engine (Not Shown) (See Separate Breakdown in ELECTRICAL Section)	
124	1001281985	1	Connector (Not Shown)	
125	1001281986	1	Connector (Not Shown)	
126	1001283008	1	Mount	
127	1001291401	1	Tag, Coolant	
128	1001301545	1	Engine Deutz TCD2.9L4 (EMR5) (See Separate Breakdown in this Section)	

FIGURE 3-57. ENGINE COMPONENTS - DEUTZ TCD2.9L4 EMR5 ENGINE

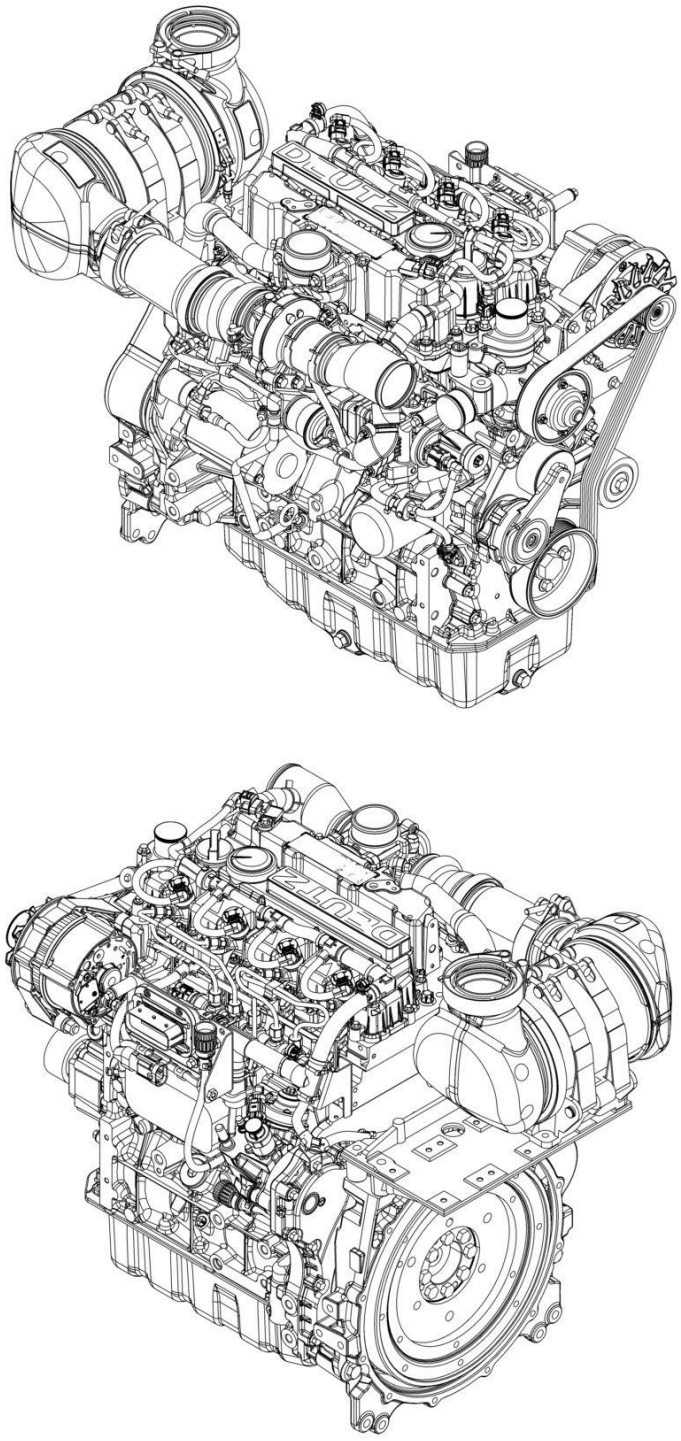

ART_1001301545

FIGURE 3-57. ENGINE COMPONENTS - DEUTZ TCD2.9L4 EMR5 ENGINE

ITEM	PART NUMBER	QTY	DESCRIPTION	REV
	1001301545	Ref	ENGINE COMPONENTS - DEUTZ TCD2.9L4 EMR5 ENGINE	A
	See Note	Ref	Note: Additional components may be available. Contact JLG Customer Service for more details.	
		Ref	**COOLING SYSTEM COMPONENTS**	
	70030360	1	Pump, Coolant (Includes Plug, Rings & Gaskets)	
	70031055	1	O-Ring, Coolant Pump	
	7020492	1	Seal, Plug	
	70007325	1	Gasket	
	70007603	1	Thermostat	
	70005184	1	O-Ring, Thermostat	
	70005931	1	Gasket, Thermostat	
	70025142	1	Cover, Thermostat	
		Ref	**ELECTRICAL SYSTEM COMPONENTS**	
	70024513	1	Cable, Pre-Filter Sensor	
	70024504	1	Sensor, Sencondary Fuel Filter	
	70029512	1	Module, ECU/ECM	
	70031144	1	Starter	
	70031142	1	Alternator (includes Regulator)	
	70031143	1	Regulator	
	70000345	4	Plug, Glow	
	70025231	1	Harness, Glow Plug (Not Shown)	
	70008436	1	Harness, Engine	
	70028540	1	Sender, Temperature	
	70024504	1	Sensor, Pressure (includes O-Ring)	
	70026210	2	Sensor, Speed (Includes O-Ring)	
	70024507	1	Sensor, Pressure (includes O-Ring) (Air Charge Manifold)	
		Ref	**EXHAUST SYSTEM COMPONENTS**	
	70025164	1	Gasket, Exhaust Manifold to Head	
	70029557	1	Gasket, Exhaust Manifold to 1st Exhaust Pipe	
	70007354	1	Gasket, 1st Exhaust Pipe to beyond	
	70031095	2	Gasket, EGR Module to Air Charge Manifold	
	70025130	8	Bolt, Exhaust Maniufold	
	70031137	1	Module, EGR	
	70007328	1	Turbocharger	
	70004504	1	Compensator	
	70007330	1	Inlet, Catalyst (Includes Clamp & Gasket)	
	70029517	1	Clamp	
	70029520	1	Gasket	
	70007331	1	Outlet, Catalyst	
		Ref	**FUEL SYSTEM COMPONENTS**	
	1001225431	1	Filter, Secondary Spin-on	
	1001225430	1	Filter, Pre-Filter Fuel	
	70030381	1	Pump, High Pressure (Includes O-Rings, Gaskets, Overflow valve & Volume Control Valve)	
	70004505	1	Valve, Overflow	
	70004508	1	Valve, Volume Control	
	70025181	4	Injector, Fuel (Includes O-Ring & Sealing Washer)	
	70008422	1	Pump, Fuel Supply (Includes Clamps)	
	70025144	2	Clamp	

SECTION 3 - ENGINE

ITEM	PART NUMBER	QTY	DESCRIPTION	REV
		Ref	**GASKETS & SEAL & KITS (Note: Some components listed with main component)**	
	70005938	1	Gasket Kit	
	70024906	1	Gasket, Head	
	70025205	1	Gasket, Valve Cover	
	70002718	1	Seal, Rear Gear Case	
	70028185	1	Gasket, Front Cover	
	70008296	1	Seal, Front Cover	
	70005176	1	O-Ring, Air Charge Manifold	
	70005177	1	Gasket, Air Charge Manifold	
		Ref	**LUBRICATION SYSTEM COMPONENTS**	
	7016331	1	Filter, Oil	
	70024904	1	Dipstick (Inlcudes Seal)	
	70024905	1	Seal	
	7020465	2	Cap, Filler	
	70005941	2	Plug, Oil Pan	
	70005942	2	Seal, Oil Pan Plug	
	70005172	1	Pump, Oil Lube (Includes O-Ring & Gasket)	
	70025135	1	O-Ring	
	70005173	1	Gasket	
	70031474	1	Cooler, Oil	
	70031388	1	Seal, Oil Cooler	
		Ref	**MECHANICAL COMPONENTS**	
	70001870	1	Flywheel (Includes Ring Gear)	
	7024579	1	Gear, Ring	
	70028699	1	Belt Tensioner	
	70027432	1	Idler	
	70025733	1	Pulley, Ribbed Belt	
	70004277	1	Belt, Drive	

FIGURE 3-58. DEUTZ TD2.9L4 ENGINE (R96) INSTALLATION- WITH REXROTH PUMPS WITH STEELS HOODS (WITHOUT COLD WEATHER PLUS PACKAGE)

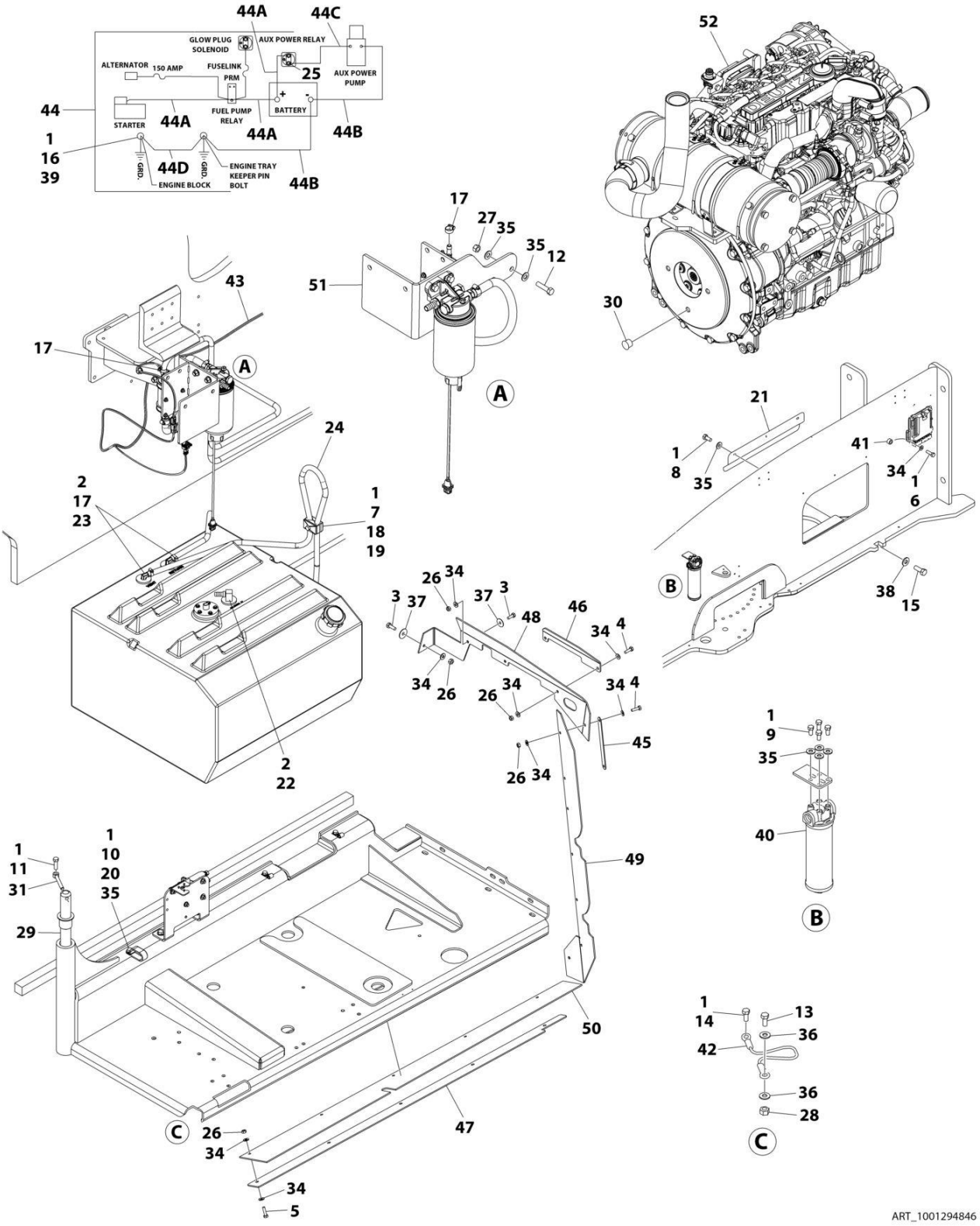

FIGURE 3-58. DEUTZ TD2.9L4 ENGINE (R96) INSTALLATION- WITH REXROTH PUMPS WITH STEELS HOODS (WITHOUT COLD WEATHER PLUS PACKAGE)

ITEM	PART NUMBER	QTY	DESCRIPTION	REV
	1001294846	Ref	ENGINE INSTALLATION (R96) WITH REXROTH PUMPS	A
1	0100011	AR	Compound, Locking	
2	0100079	AR	Sealant, Pipe	
3	0641406	3	Bolt 1/4 x 3/4	
4	0641407	8	Bolt 1/4 x 7/8	
5	0641408	5	Bolt 1/4 x 1	
6	0641410	4	Bolt 1/4 x 1-1/4	
7	0641511	1	Bolt 5/16 x 1-3/8	
8	0641605	3	Bolt 3/8 x 5/8	
9	0641606	4	Bolt 3/8 x 3/4	
10	0641608	5	Bolt 3/8 x 1	
11	0641610	1	Bolt 3/8 x 1-1/4	
12	0641612	2	Bolt 3/8 x 1-1/2	
13	0641708	1	Bolt 7/16 x 1	
14	0641808	1	Bolt 1/2 x 1	
15	0642010	1	Bolt 5/8 x 1-1/4	
16	0761210	1	Bolt M12 x 20	
17	1320022	3	Clamp	
18	1320187	1	Clamp	
19	1320190	1	Clamp	
20	1321716	5	Clamp	
21	1671121	1	Cover	
22	2180832	1	Fitting, Barbed	
23	2220313	2	Fitting, 90 NPTF/Barbed	
24	2750532	6 ft /1.9 m	Hose	
25	3300220	2	Nut	
26	3311405	16	Nut 1/4	
27	3311605	2	Nut 3/8	
28	3311705	1	Nut 7/16	
29	3422446	1	Pin	
30	3520054	1	Plug	
31	3841143	1	Keeper, Pin	
32	4240018	AR	Tie-Strap (Not Shown)	
33	4460234	AR	Mount, Tie-Strap (Not Shown)	
34	4711400	33	Washer 1/4	
35	4711600	16	Washer 3/8	
36	4711700	2	Washer 7/16	
37	4740430	3	Washer	
38	4752000	1	Washer 5/8	
39	4812100	1	Washer M12	
40	1001108617	1	Filter	
40	70002231	1	Element, Filter	
41	1001110425	4	Spacer	
42	1001131542	1	Lanyard	
43	1001138491	1	Harness, Fuel (See Separate Breakdown in ELECTRICAL Section)	
44	1001141225	1	Battery Cable Kit	
44A	7027042	1	Cable, Battery (Red) (Battery + to Relays and Starter)	

SECTION 3 - ENGINE

ITEM	PART NUMBER	QTY	DESCRIPTION	REV
44B	7027043	1	Cable, Battery (Black) (Battery - to Tray Pivot Grd and Aux Pump)	
44C	7027044	1	Cable (Red) (Aux Relay to Aux Pump)	
44D	7027045	1	Cable, Battery (Black) (Engine to Tray Pivot Grd)	
45	1001167164	3	Plate	
46	1001177945	1	Bracket	
47	1001177946	1	Bracket	
48	1001177957	1	Seal	
49	1001177958	1	Seal	
50	1001177959	1	Seal	
51	1001227606	1	Bracket	
52	1001294825	1	DEUTZ TC2.9L4 (R96) Engine Sub-Assembly (See Separate Breakdown in this Section)	

FIGURE 3-59. DEUTZ TD2.9L4 ENGINE (R96) INSTALLATION - WITH REXROTH PUMPS AND ABS HOODS (WITHOUT COLD WEATHER PLUS PACKAGE)

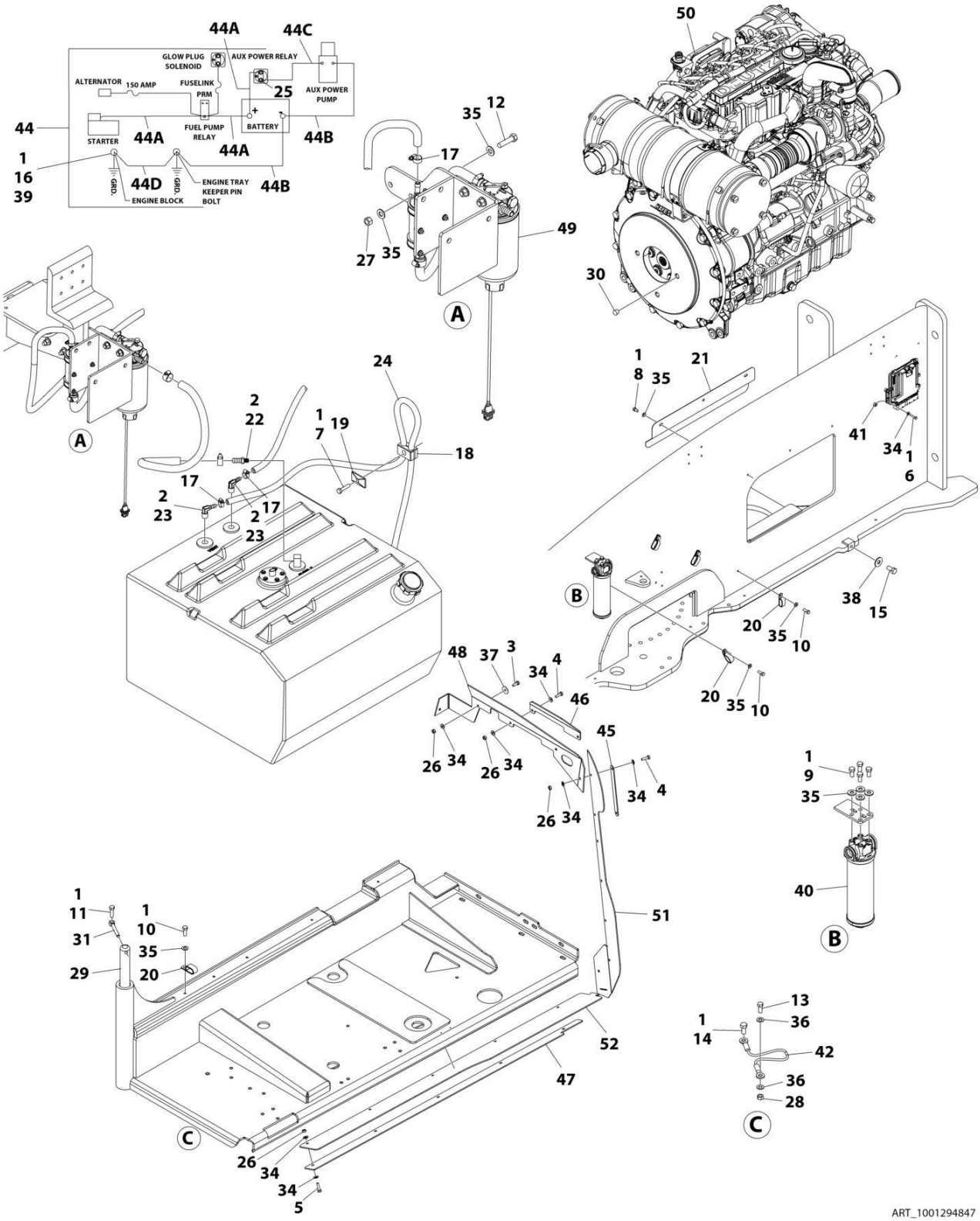

FIGURE 3-59. DEUTZ TD2.9L4 ENGINE (R96) INSTALLATION - WITH REXROTH PUMPS AND ABS HOODS (WITHOUT COLD WEATHER PLUS PACKAGE)

ITEM	PART NUMBER	QTY	DESCRIPTION	REV
	1001294847	Ref	DEUTZ TD2.9L4 ENGINE INSTALLATION	A
1	0100011	AR	Compound, Locking	
2	0100079	AR	Sealant, Pipe	
3	0641406	3	Bolt 1/4 x 3/4	
4	0641407	8	Bolt 1/4 x 7/8	
5	0641408	5	Bolt 1/4 x 1	
6	0641410	4	Bolt 1/4 x 1-1/4	
7	0641511	1	Bolt 5/16 x 1-3/8	
8	0641605	3	Bolt 3/8 x 5/8	
9	0641606	4	Bolt 3/8 x 3/4	
10	0641608	5	Bolt 3/8 x 1	
11	0641610	1	Bolt 3/8 x 1-1/4	
12	0641612	2	Bolt 3/8 x 1-1/2	
13	0641708	1	Bolt 7/16 x 1	
14	0641808	1	Bolt 1/2 x 1	
15	0642010	1	Bolt 5/8 x 1-1/4	
16	0761210	1	Bolt M12 x 20	
17	1320022	3	Clamp	
18	1320187	1	Clamp	
19	1320190	1	Clamp	
20	1321716	5	Clamp	
21	1671121	1	Cover	
22	2180832	1	Fitting, Barbed	
23	2220313	2	Fitting, 90 NPTF/Barbed	
24	2750532	6.5 ft /2 m	Hose	
25	3300220	2	Nut	
26	3311405	16	Nut 1/4	
27	3311605	2	Nut 3/8	
28	3311705	1	Nut 7/16	
29	3422446	1	Pin	
30	3520054	1	Plug	
31	3841143	1	Pin, Keeper	
32	4240018	AR	Tie-Strap (Not Shown)	
33	4460234	AR	Mount, Tie-Strap (Not Shown)	
34	4711400	33	Washer 1/4	
35	4711600	16	Washer 3/8	
36	4711700	2	Washer 7/16	
37	4740430	3	Washer	
38	4752000	1	Washer 5/8	
39	4812100	1	Washer M12	
40	1001108617	1	Filter	
40	70002231	1	Element, Filter	
41	1001110425	4	Spacer	
42	1001131542	1	Lanyard	
43	1001138491	1	Harness, Fuel (Not Shown - See Separate Breakdown in ELECTRICAL Section)	
44	1001141225	1	Battery Cable Kit	
44A	7027042	1	Cable, Battery (Red) (Battery + to Relays and Starter)	

SECTION 3 - ENGINE

ITEM	PART NUMBER	QTY	DESCRIPTION	REV
44B	7027043	1	Cable, Battery (Black) (Battery - to Tray Pivot Grd and Aux Pump)	
44C	7027044	1	Cable (Red) (Aux Relay to Aux Pump)	
44D	7027045	1	Cable, Battery (Black) (Engine to Tray Pivot Grd)	
45	1001167164	3	Support	
46	1001177945	1	Bracket	
47	1001177946	1	Bracket	
48	1001177957	1	Seal	
49	1001227606	1	Bracket, Fuel Pump Filter Assembly (See Separate Breakdown in this Section)	
50	1001294825	1	Engine Sub-Assembly (See Separate Breakdown in this Section)	
51	1001295204	1	Seal	
52	1001295205	1	Seal	

FIGURE 3-60. DEUTZ TD2.9L4 ENGINE (R96) SUB-ASSEMBLY - WITH REXROTH PUMPS WITH STEELS HOODS (WITHOUT COLD WEATHER PLUS PACKAGE)

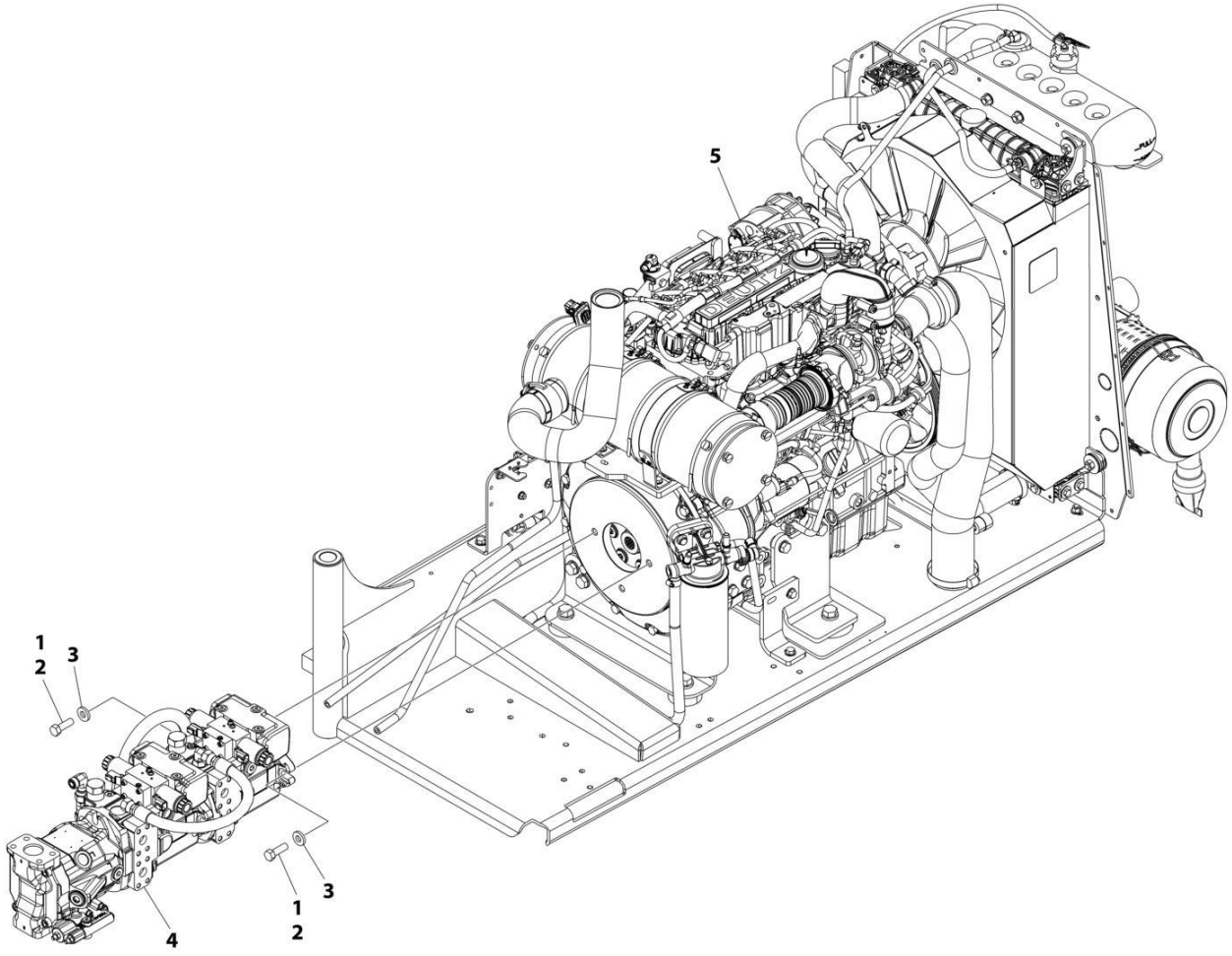

FIGURE 3-60. DEUTZ TD2.9L4 ENGINE (R96) SUB-ASSEMBLY - WITH REXROTH PUMPS WITH STEELS HOODS (WITHOUT COLD WEATHER PLUS PACKAGE)

ITEM	PART NUMBER	QTY	DESCRIPTION	REV
	1001294825	Ref	ENGINE SUB-ASSEMBLY (R96) WITH REXROTH PUMPS	A
1	0100011	AR	Compound, Locking	
2	0641812	2	Bolt 1/2 x 1-1/2	
3	4891800	2	Washer 1/2	
4	1001152963	1	Pump Assembly - Rexroth (See Separate Breakdown in this Section)	
5	1001294778	1	Deutz TC2.9L4 (R96) Engine Assembly (See Separate Breakdown in this Section)	

FIGURE 3-61. DEUTZ TD2.9L4 ENGINE (R96) INSTALLATION - WITH SAUER PUMPS AND ABS HOODS (WITHOUT COLD WEATHER PLUS PACKAGE)

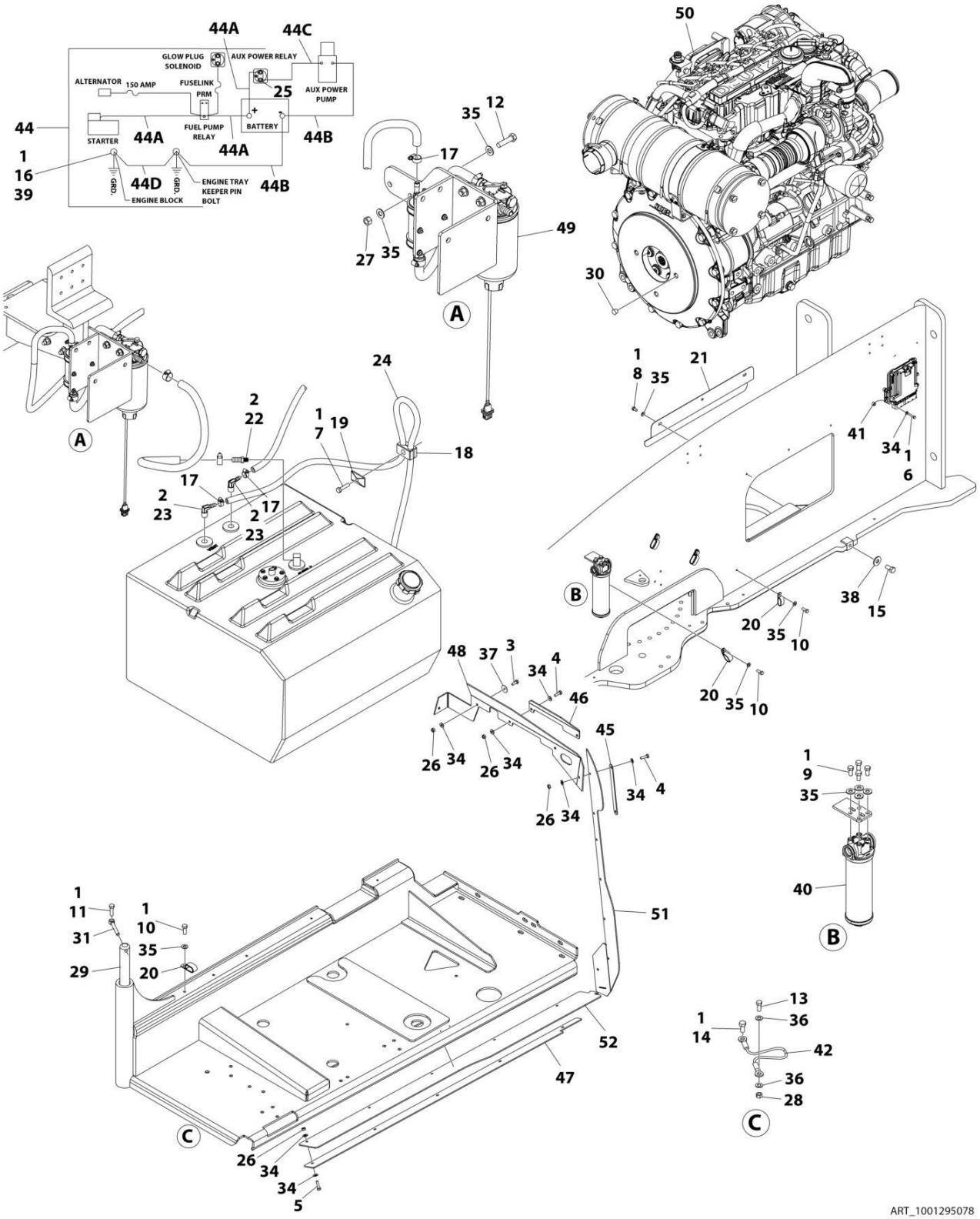

FIGURE 3-61. DEUTZ TD2.9L4 ENGINE (R96) INSTALLATION - WITH SAUER PUMPS AND ABS HOODS (WITHOUT COLD WEATHER PLUS PACKAGE)

ITEM	PART NUMBER	QTY	DESCRIPTION	REV
	1001295078	Ref	DEUTZ TD2.9L4 ENGINE INSTALLATION	A
1	0100011	AR	Compound, Locking	
2	0100079	AR	Sealant, Pipe	
3	0641406	3	Bolt 1/4 x 3/4	
4	0641407	8	Bolt 1/4 x 7/8	
5	0641408	5	Bolt 1/4 x 1	
6	0641410	4	Bolt 1/4 x 1-1/4	
7	0641511	1	Bolt 5/16 x 1-3/8	
8	0641605	3	Bolt 3/8 x 5/8	
9	0641606	4	Bolt 3/8 x 3/4	
10	0641608	5	Bolt 3/8 x 1	
11	0641610	1	Bolt 3/8 x 1-1/4	
12	0641612	2	Bolt 3/8 x 1-1/2	
13	0641708	1	Bolt 7/16 x 1	
14	0641808	1	Bolt 1/2 x 1	
15	0642010	1	Bolt 5/8 x 1-1/4	
16	0761210	1	Bolt M12 x 20	
17	1320022	3	Clamp	
18	1320187	1	Clamp	
19	1320190	1	Clamp	
20	1321716	5	Clamp	
21	1671121	1	Cover	
22	2180832	1	Fitting, Barbed	
23	2220313	2	Fitting, 90 NPTF/Barbed	
24	2750532	6.5 ft /2 m	Hose	
25	3300220	2	Nut	
26	3311405	16	Nut 1/4	
27	3311605	2	Nut 3/8	
28	3311705	1	Nut 7/16	
29	3422446	1	Pin	
30	3520054	1	Plug	
31	3841143	1	Pin, Keeper	
32	4240018	AR	Tie-Strap (Not Shown)	
33	4460234	AR	Mount, Tie-Strap (Not Shown)	
34	4711400	33	Washer 1/4	
35	4711600	16	Washer 3/8	
36	4711700	2	Washer 7/16	
37	4740430	3	Washer	
38	4752000	1	Washer 5/8	
39	4812100	1	Washer M12	
40	1001108617	1	Filter	
40	70002231	1	Element, Filter	
41	1001110425	4	Spacer	
42	1001131542	1	Lanyard	
43	1001138491	1	Harness, Fuel (Not shown - See Separate Breakdown in ELECTRICAL Section)	
44	1001141225	1	Battery Cable Kit	
44A	7027042	1	Cable, Battery (Red) (Battery + to Relays and Starter)	

SECTION 3 - ENGINE

ITEM	PART NUMBER	QTY	DESCRIPTION	REV
44B	7027043	1	Cable, Battery (Black) (Battery - to Tray Pivot Grd and Aux Pump)	
44C	7027044	1	Cable (Red) (Aux Relay to Aux Pump)	
44D	7027045	1	Cable, Battery (Black) (Engine to Tray Pivot Grd)	
45	1001167164	3	Support	
46	1001177945	1	Bracket	
47	1001177946	1	Bracket	
48	1001177957	1	Seal	
49	1001227606	1	Bracket, Fuel Pump Filter Assembly (See Separate Breakdown in this Section)	
50	1001294808	1	Engine Sub-Assembly (See Separate Breakdown in this Section)	
51	1001295204	1	Seal	
52	1001295205	1	Seal	

FIGURE 3-62. DEUTZ TD2.9L4 ENGINE (R96) INSTALLATION- WITH SAUER PUMPS WITH STEELS HOODS (WITHOUT COLD WEATHER PLUS PACKAGE)

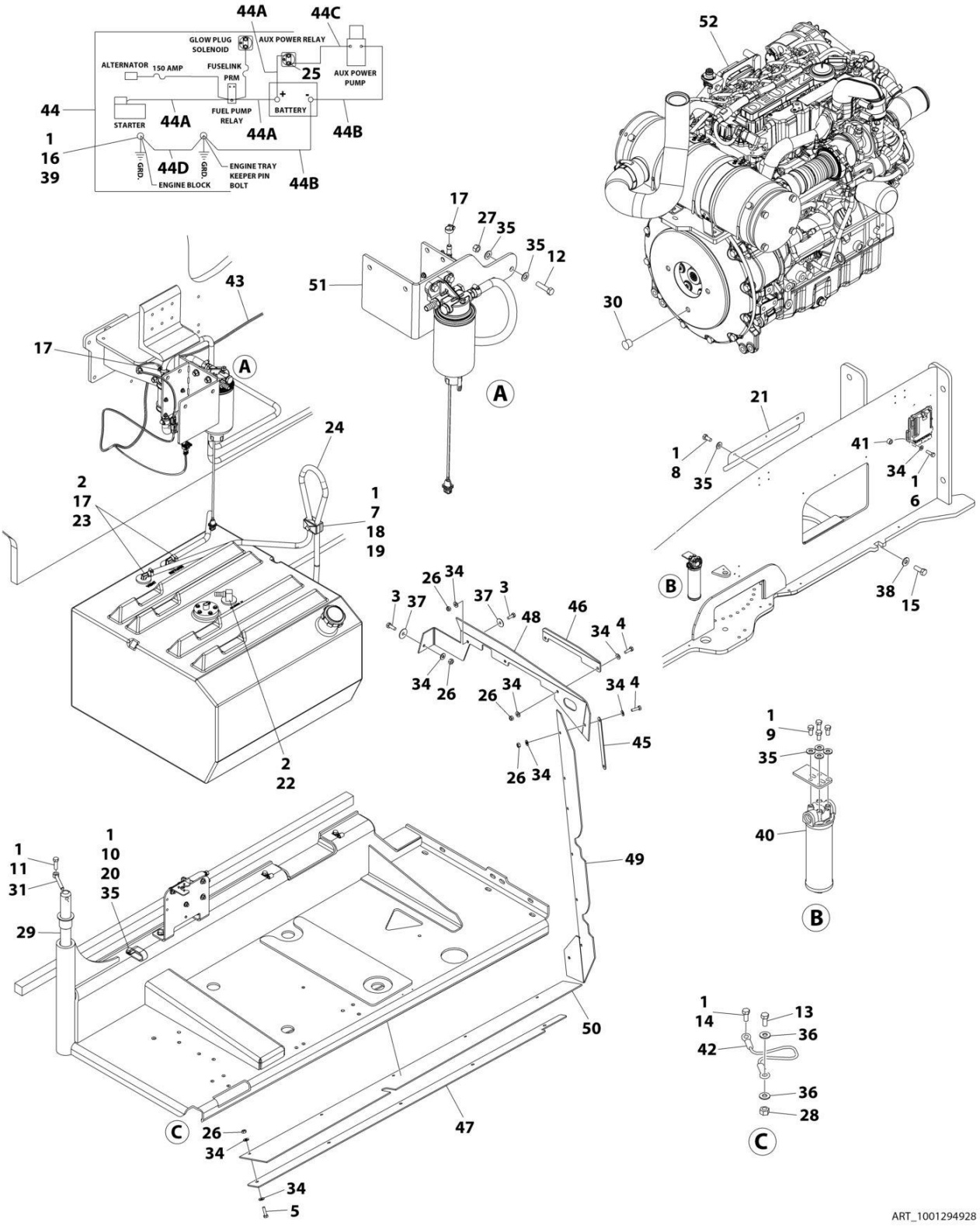

FIGURE 3-62. DEUTZ TD2.9L4 ENGINE (R96) INSTALLATION- WITH SAUER PUMPS WITH STEELS HOODS (WITHOUT COLD WEATHER PLUS PACKAGE)

ITEM	PART NUMBER	QTY	DESCRIPTION	REV
	1001294928	Ref	ENGINE INSTALLATION (R96) WITH SAUER PUMPS	A
1	0100011	AR	Compound, Locking	
2	0100079	AR	Sealant, Pipe	
3	0641406	3	Bolt 1/4 x 3/4	
4	0641407	8	Bolt 1/4 x 7/8	
5	0641408	5	Bolt 1/4 x 1	
6	0641410	4	Bolt 1/4 x 1-1/4	
7	0641511	1	Bolt 5/16 x 1-3/8	
8	0641605	3	Bolt 3/8 x 5/8	
9	0641606	4	Bolt 3/8 x 3/4	
10	0641608	5	Bolt 3/8 x 1	
11	0641610	1	Bolt 3/8 x 1-1/4	
12	0641612	2	Bolt 3/8 x 1-1/2	
13	0641708	1	Bolt 7/16 x 1	
14	0641808	1	Bolt 1/2 x 1	
15	0642010	1	Bolt 5/8 x 1-1/4	
16	0761210	1	Bolt M12 x 20	
17	1320022	3	Clamp	
18	1320187	1	Clamp	
19	1320190	1	Clamp	
20	1321716	5	Clamp	
21	1671121	1	Cover	
22	2180832	1	Fitting, Barbed	
23	2220313	2	Fitting, 90 NPTF/Barbed	
24	2750532	6 ft /1.9 m	Hose	
25	3300220	2	Nut	
26	3311405	16	Nut 1/4	
27	3311605	2	Nut 3/8	
28	3311705	1	Nut 7/16	
29	3422446	1	Pin	
30	3520054	1	Plug	
31	3841143	1	Keeper, Pin	
32	4240018	AR	Tie-Strap (Not Shown)	
33	4460234	AR	Mount, Tie-Strap (Not Shown)	
34	4711400	33	Washer 1/4	
35	4711600	16	Washer 3/8	
36	4711700	2	Washer 7/16	
37	4740430	3	Washer	
38	4752000	1	Washer 5/8	
39	4812100	1	Washer M12	
40	1001108617	1	Filter	
40	70002231	1	Element, Filter	
41	1001110425	4	Spacer	
42	1001131542	1	Lanyard	
43	1001138491	1	Harness, Fuel (See Separate Breakdown in ELECTRICAL Section)	
44	1001141225	1	Battery Cable Kit	
44A	7027042	1	Cable, Battery (Red) (Battery + to Relays and Starter)	

SECTION 3 - ENGINE

ITEM	PART NUMBER	QTY	DESCRIPTION	REV
44B	7027043	1	Cable, Battery (Black) (Battery - to Tray Pivot Grd and Aux Pump)	
44C	7027044	1	Cable (Red) (Aux Relay to Aux Pump)	
44D	7027045	1	Cable, Battery (Black) (Engine to Tray Pivot Grd)	
45	1001167164	3	Plate	
46	1001177945	1	Bracket	
47	1001177946	1	Bracket	
48	1001177957	1	Seal	
49	1001177958	1	Seal	
50	1001177959	1	Seal	
51	1001227606	1	Bracket	
52	1001294808	1	DEUTZ TC2.9L4 (R96) Engine Sub-Assembly (See Separate Breakdown in this Section)	

FIGURE 3-63. DEUTZ TD2.9L4 ENGINE (R96) SUB-ASSEMBLY - WITH SAUER PUMPS WITH ABS HOODS (WITHOUT COLD WEATHER PLUS PACKAGE)

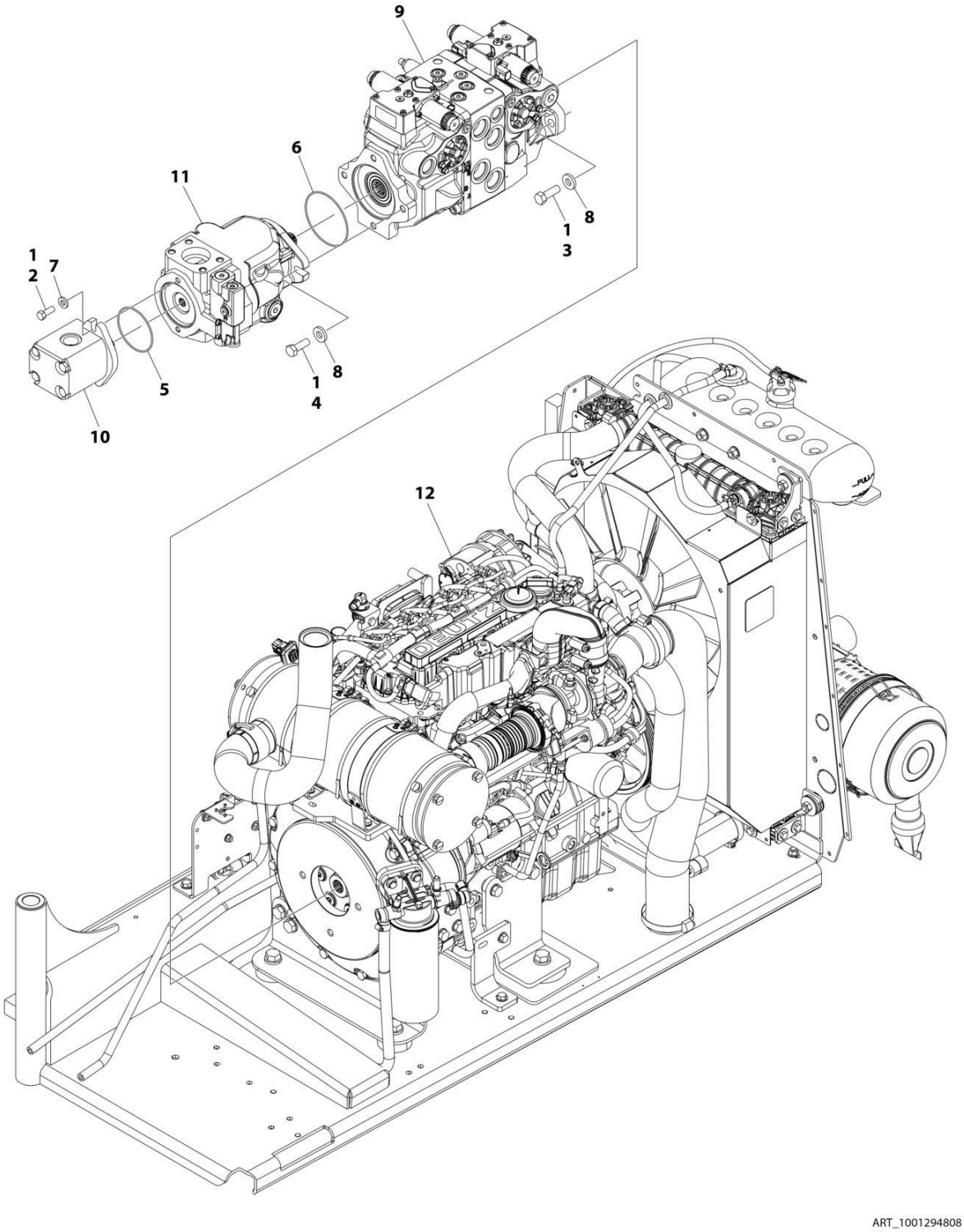

FIGURE 3-63. DEUTZ TD2.9L4 ENGINE (R96) SUB-ASSEMBLY - WITH SAUER PUMPS WITH ABS HOODS (WITHOUT COLD WEATHER PLUS PACKAGE)

ITEM	PART NUMBER	QTY	DESCRIPTION	REV
	1001294808	Ref	ENGINE SUB-ASSEMBLY (R96) WITH SAUER PUMPS	A
1	0100011	AR	Compound, Locking	
2	0641608	2	Bolt 3/8 x 1	
3	0641812	2	Bolt 1/2 x 1-1/2	
4	0761215	2	Bolt M12 x 35	
5	3790152	1	O-Ring	
6	3790155	1	O-Ring	
7	4891600	2	Washer 3/8	
8	4891800	4	Washer 1/2	
9	1001108616	1	Pump Assembly - Sauer Tandem (See Separate Breakdown in this Section)	
10	1001112927	1	Pump Assembly - Sauer Gear (See Separate Breakdown in this Section)	
11	1001171095	1	Pump Assembly - Sauer Piston (See Separate Breakdown in this Section)	
12	1001294778	1	Deutz TC2.9L4 (R96) Engine Assembly (See Separate Breakdown in this Section)	

FIGURE 3-64. DEUTZ TD2.9L4 ENGINE (R96) ASSEMBLY - (WITHOUT COLD WEATHER PLUS PACKAGE)

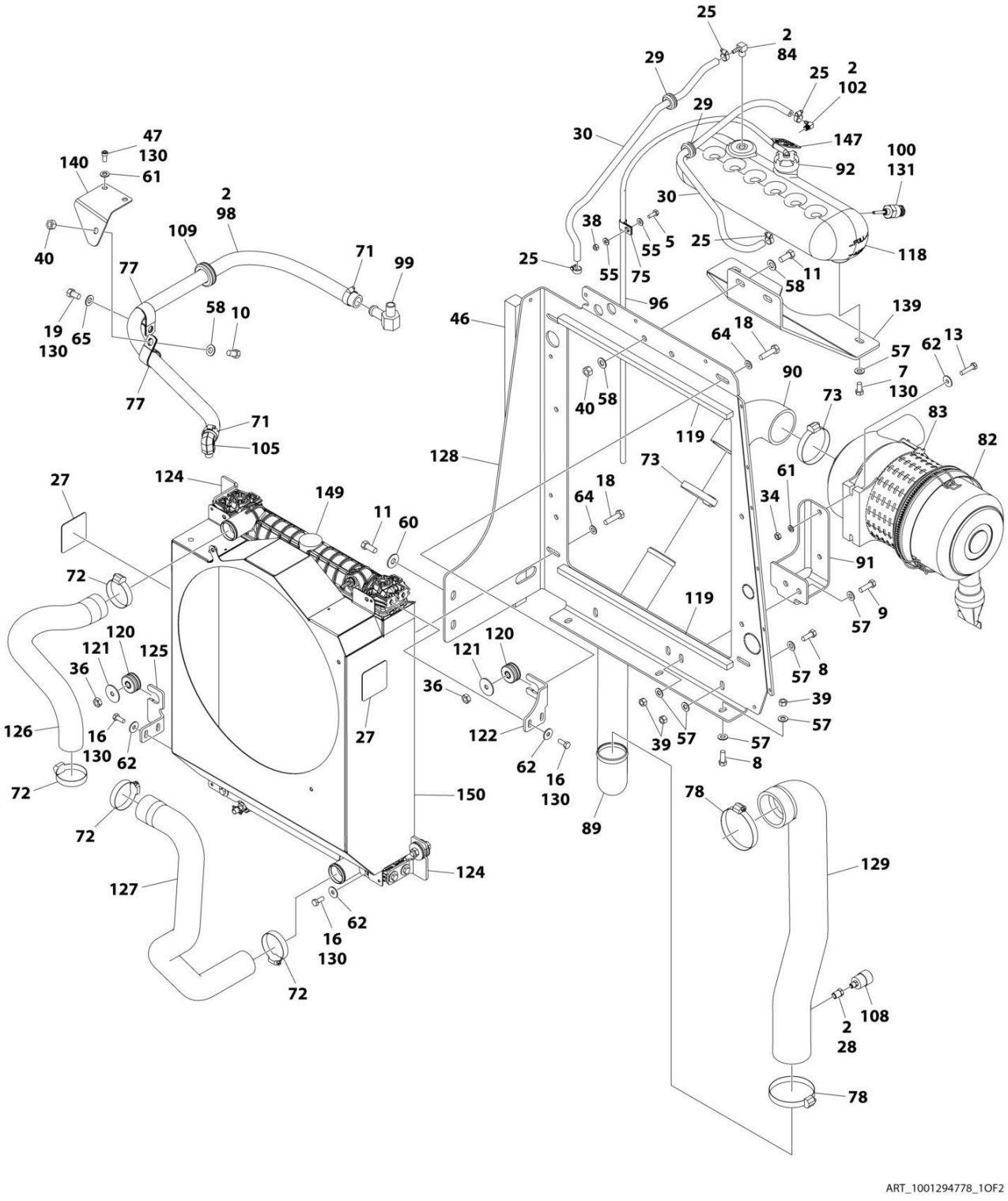

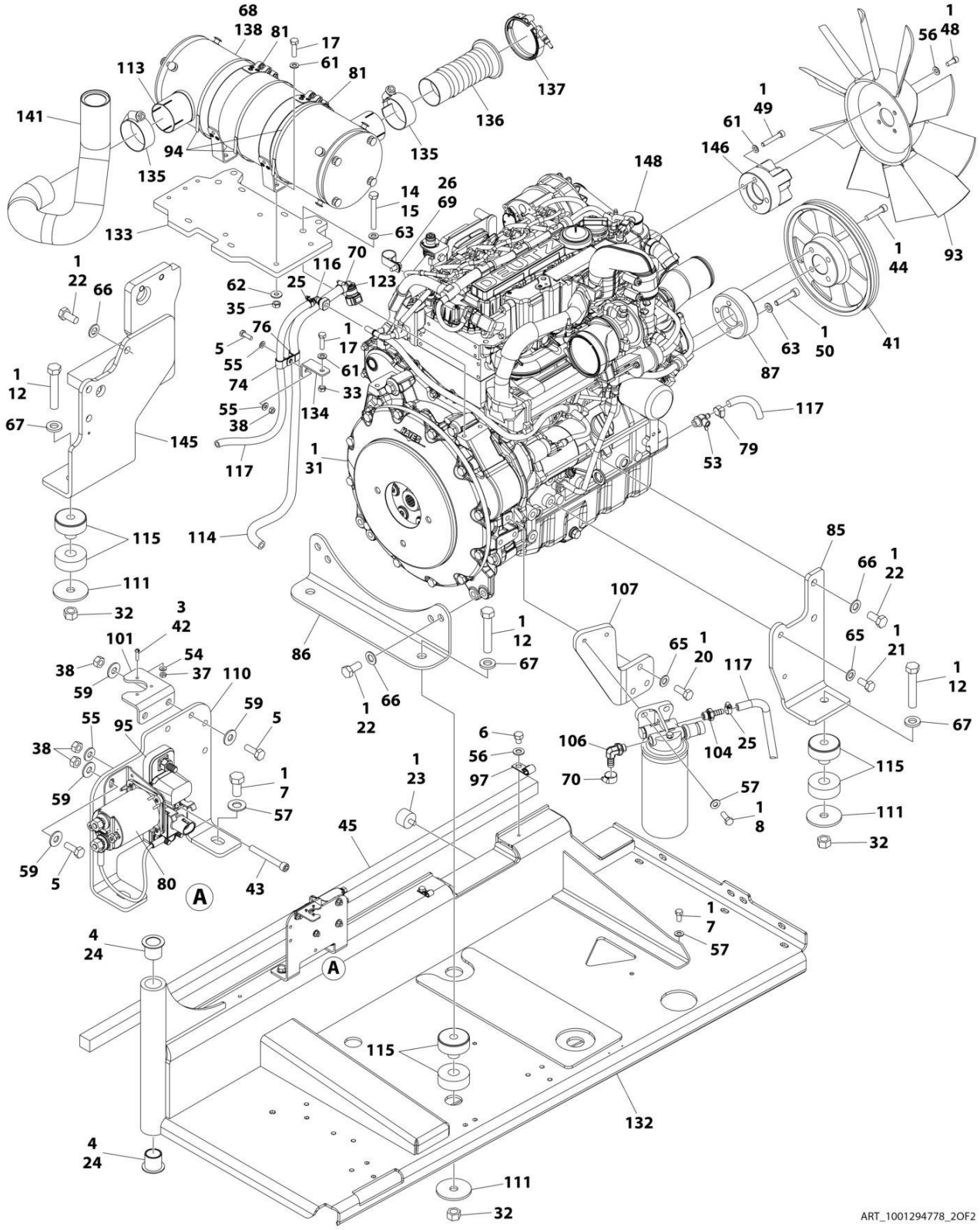
ART_1001294778_2OF2

FIGURE 3-64. DEUTZ TD2.9L4 ENGINE (R96) ASSEMBLY - (WITHOUT COLD WEATHER PLUS PACKAGE)

ITEM	PART NUMBER	QTY	DESCRIPTION	REV
	1001294778	Ref	ENGINE SUB-ASSEMBLY (R96)	A
1	0100011	AR	Compound, Locking	
2	0100020	AR	Sealant, Pipe	
3	0100035	AR	Compound, Locking	
4	0100062	AR	Adhesive	
5	0641406	7	Bolt 1/4 x 3/4	
6	0641503	2	Bolt 5/16 x 3/8	
7	0641606	5	Bolt 3/8 x 3/4	
8	0641608	7	Bolt 3/8 x 1	
9	0641610	2	Bolt 3/8 x 1-1/4	
10	0641706	1	Bolt 7/16 x 3/4	
11	0641708	4	Bolt 7/16 x 1	
12	0682028	4	Bolt 5/8 x 3-1/2	
13	0700815	2	Bolt M8 x 35	
14	0701022	2	Bolt M10 x 70	
15	0701025	2	Bolt M10 x 85	
16	0760810	12	Bolt M8 x 20	
17	0760814	5	Bolt M8 x 30	
18	0761016	4	Bolt M10 x 40	
19	0761210	1	Bolt M12 x 20	
20	0761214	3	Bolt M12 x 30	
21	0771212	1	Bolt M12 x 25	
22	0771414	9	Bolt M14 x 30	
23	0940070	1	Bumper	
24	0961986	2	Bearing	
25	1320022	6	Clamp	
26	1320130	1	Clamp	
27	1703162	2	Decal - Fan Blade	
28	2220273	1	Fitting	
29	2540038	2	Grommet	
30	2720015	5 ft /2 m	Hose	
31	2902065	1	Pump Coupling Kit (See Separate Breakdown in this Section)	
32	3272001	4	Nut 5/8	
33	3290801	AR	Nut M8	
34	3290805	2	Nut M8	
35	3290807	4	Nut M8	
36	3291007	4	Nut M10	
37	3310401	3	Nut #4	
38	3311405	8	Nut 1/4	
39	3311605	7	Nut 3/8	
40	3311705	3	Nut 7/16	
41	3580320	1	Pulley	
42	3910408	3	Screw #4 x 1/2	
43	3931432	1	Capscrew 1/4 x 2	
44	3931628	4	Capscrew 3/8 x 1-3/4	
45	3960543	1	Seal	
46	3960544	1	Seal	
47	4031907	2	Bolt M8 x 16	
48	4031908	4	Bolt M8 x 20	

ITEM	PART NUMBER	QTY	DESCRIPTION	REV
49	4031912	4	Bolt M8 x 40	
50	4032014	4	Bolt M10 x 50	
51	4240032	AR	Tie-Strap (Not Shown)	
52	4240099	AR	Tie-Strap (Not Shown)	
53	4640751	1	Valve, Oil Drain	
54	4710400	3	Washer #4	
55	4711400	7	Washer 1/4	
56	4711500	6	Washer 5/16	
57	4711600	21	Washer 3/8	
58	4711700	6	Washer 7/16	
59	4751400	8	Washer 1/4	
60	4751700	2	Washer 7/16	
61	4811900	13	Washer M8	
62	4811902	18	Washer M8	
63	4812000	8	Washer M10	
64	4812002	4	Washer M10	
65	4812100	5	Washer M12	
66	4812200	9	Washer M14	
67	4892000	4	Washer 5/8	
68	4920385	AR	Wire, Safety	
69	5250808	1	Bolt M8 x 16	
70	8405006	2	Clamp	
70	8405007	2	Clamp	
72	8405201	4	Clamp	
73	8405204	2	Clamp	
74	8406102	1	Clip	
75	8406109	2	Clip	
76	8406112	1	Clip	
77	8406302	2	Clamp	
78	8410011	2	Clamp	
79	8410013	1	Clamp	
80	1001117308	1	Contactor	
81	1001119727	2	Clamp	
82	1001133633	1	Filter, Air	
82	70024190	1	Element, Air Filter	
83	1001133634	1	Cap	
84	1001134488	1	Fitting, 90 Barbed	
85	1001135560	1	Support	
86	1001135562	1	Support	
87	1001135679	1	Adapter	
88	1001135779	1	Cable, Alternator (Not Shown)	
89	1001135903	1	Pipe	
90	1001135946	1	Coupling	
91	1001136665	1	Bracket	
92	1001136834	1	Cap	
93	1001137276	1	Fan	
94	1001137336	6	Strap	
95	1001138228	1	Relay	
96	1001138248	4 ft /1.2 m	Hose	
97	1001138253	2	Clamp	
98	1001138524	1	Hose	

ITEM	PART NUMBER	QTY	DESCRIPTION	REV
99	1001138559	1	Fitting, 90	
100	1001138827	1	Sensor, Coolant Level	
101	1001139240	1	Bracket	
102	1001140564	1	Fitting, 90	
103	1001141304	1	Wire, Glow Plug (Not Shown)	
104	1001141717	1	Fitting, Straight	
105	1001141719	1	Fitting, 90	
106	1001142501	1	Fitting, 90	
107	1001142685	1	Bracket	
108	1001143390	1	Indicator	
109	1001144089	1	Grommet	
110	1001145154	1	Plate	
111	1001146219	4	Washer	
112	1001148843	1	Harness, Fuel Filter (Not Shown - See Separate Breakdown in ELECTRICAL Section)	
113	1001151432	1	Muffler	
114	1001154405	5 ft /2 m	Hose	
115	1001155575	4	Mount	
116	1001155823	1	Coupling, 90 Quick Connect	
117	1001165035	31 ft /10 m	Hose	
118	1001166393	1	Tank	
119	1001168166	4	Seal	
120	1001169054	4	Isolator	
121	1001169138	4	Pad	
122	1001170035	1	Bracket	
123	1001170982	1	Adapter	
124	1001176329	2	Bracket	
125	1001176330	1	Bracket	
126	1001176415	1	Hose	
127	1001176416	1	Hose	
128	1001178236	1	Support	
129	1001178894	1	Hose	
130	1001180620	AR	Adhesive	
131	1001182997	AR	Adhesive	
132	1001187011	1	Tray	
133	1001221203	1	Muffler Bracket Assembly	
134	1001221205	1	Bracket	
135	1001221212	2	Clamp	
136	1001221217	1	Pipe, Flex Assembly	
137	1001221219	1	Clamp	
138	1001221427	1	Muffler-Wrap Assembly	
139	1001229599	1	Bracket	
140	1001229600	1	Plate	
141	1001257155	1	Pipe, Exhaust	
142	1001276646	1	Engine Harness (Not Shown - See Separate Breakdown in ELECTRICAL Section)	
143	1001281985	1	Connector (Not Shown)	
144	1001281986	1	Connector (Not Shown)	
145	1001283008	1	Mount	
146	1001289964	1	Adapter	
147	1001291401	1	Tag, Coolant	

ITEM	PART NUMBER	QTY	DESCRIPTION	REV
148	1001293889	1	Engine (See Separate Breakdown in this Section)	
149	1001303270	1	Cooler, Engine	
150	1001306438	1	Shroud	

FIGURE 3-65. DEUTZ TD2.9L4 ENGINE (R96) INSTALLATION- WITH REXROTH PUMPS WITH STEELS HOODS (WITH COLD WEATHER PLUS PACKAGE)

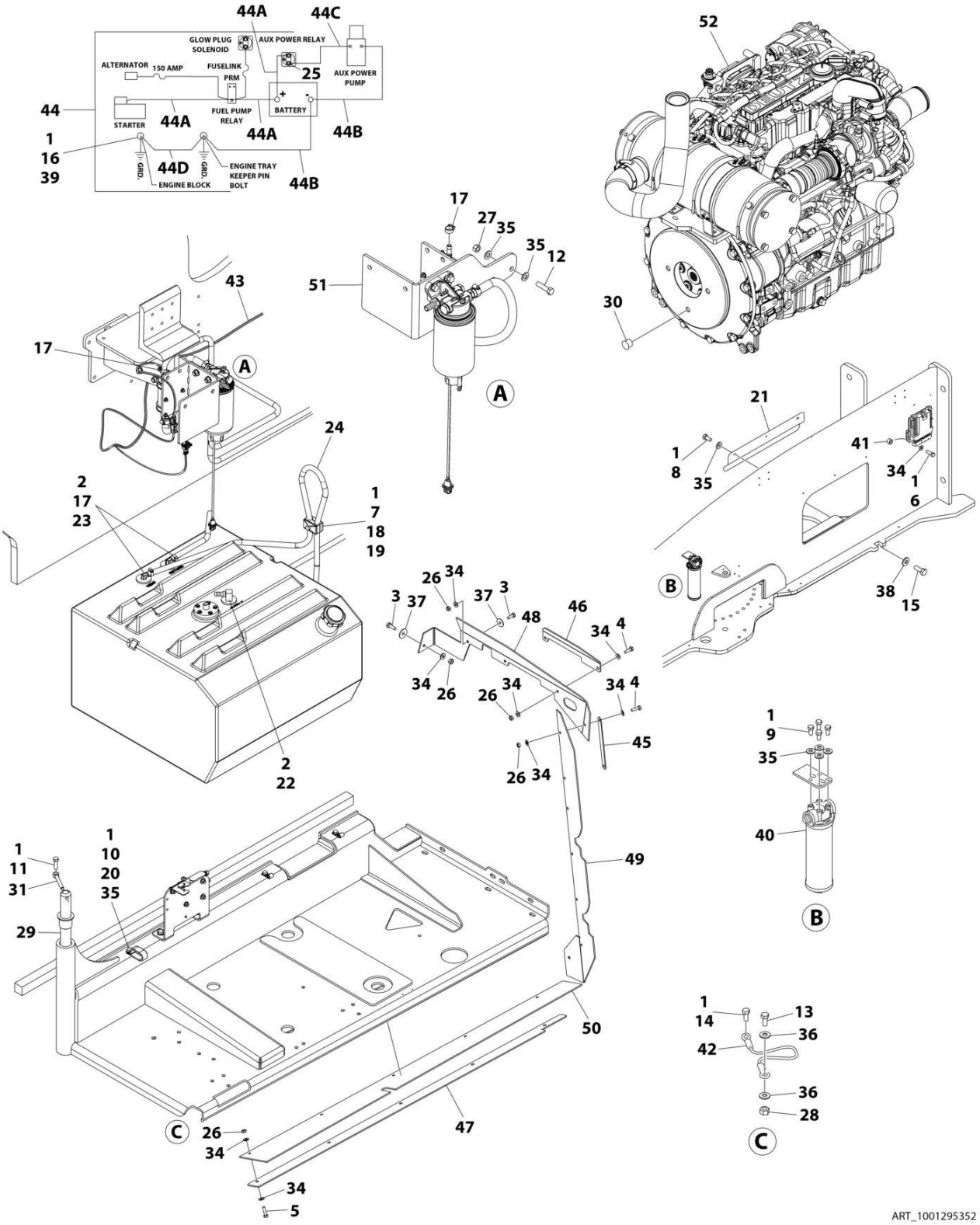

FIGURE 3-65. DEUTZ TD2.9L4 ENGINE (R96) INSTALLATION- WITH REXROTH PUMPS WITH STEELS HOODS (WITH COLD WEATHER PLUS PACKAGE)

ITEM	PART NUMBER	QTY	DESCRIPTION	REV
	1001295352	Ref	ENGINE INSTALLATION (R96) WITH REXROTH PUMPS	A
1	0100011	AR	Compound, Locking	
2	0100079	AR	Sealant, Pipe	
3	0641406	3	Bolt 1/4 x 3/4	
4	0641407	8	Bolt 1/4 x 7/8	
5	0641408	5	Bolt 1/4 x 1	
6	0641410	4	Bolt 1/4 x 1-1/4	
7	0641511	1	Bolt 5/16 x 1-3/8	
8	0641605	3	Bolt 3/8 x 5/8	
9	0641606	4	Bolt 3/8 x 3/4	
10	0641608	5	Bolt 3/8 x 1	
11	0641610	1	Bolt 3/8 x 1-1/4	
12	0641612	2	Bolt 3/8 x 1-1/2	
13	0641708	1	Bolt 7/16 x 1	
14	0641808	1	Bolt 1/2 x 1	
15	0642010	1	Bolt 5/8 x 1-1/4	
16	0761210	1	Bolt M12 x 20	
17	1320022	3	Clamp	
18	1320187	1	Clamp	
19	1320190	1	Clamp	
20	1321716	5	Clamp	
21	1671121	1	Cover	
22	2180832	1	Fitting, Barbed	
23	2220313	2	Fitting, 90 NPTF/Barbed	
24	2750532	6 ft /1.9 m	Hose	
25	3300220	2	Nut	
26	3311405	16	Nut 1/4	
27	3311605	2	Nut 3/8	
28	3311705	1	Nut 7/16	
29	3422446	1	Pin	
30	3520054	1	Plug	
31	3841143	1	Keeper, Pin	
32	4240018	AR	Tie-Strap (Not Shown)	
33	4460234	AR	Mount, Tie-Strap (Not Shown)	
34	4711400	33	Washer 1/4	
35	4711600	16	Washer 3/8	
36	4711700	2	Washer 7/16	
37	4740430	3	Washer	
38	4752000	1	Washer 5/8	
39	4812100	1	Washer M12	
40	1001108617	1	Filter	
40	70002231	1	Element, Filter	
41	1001110425	4	Spacer	
42	1001131542	1	Lanyard	
43	1001138491	1	Harness, Fuel (See Separate Breakdown in ELECTRICAL Section)	
44	1001141225	1	Battery Cable Kit	
44A	7027042	1	Cable, Battery (Red) (Battery + to Relays and Starter)	

SECTION 3 - ENGINE

ITEM	PART NUMBER	QTY	DESCRIPTION	REV
44B	7027043	1	Cable, Battery (Black) (Battery - to Tray Pivot Grd and Aux Pump)	
44C	7027044	1	Cable (Red) (Aux Relay to Aux Pump)	
44D	7027045	1	Cable, Battery (Black) (Engine to Tray Pivot Grd)	
45	1001167164	3	Plate	
46	1001177945	1	Bracket	
47	1001177946	1	Bracket	
48	1001177957	1	Seal	
49	1001177958	1	Seal	
50	1001177959	1	Seal	
51	1001227606	1	Bracket	
52	1001295313	1	DEUTZ TC2.9L4 (R96) Engine Sub-Assembly (with Cold Weather Plus Package) (See Separate Breakdown in this Section)	

FIGURE 3-66. DEUTZ TD2.9L4 ENGINE (R96) SUB-ASSEMBLY - WITH REXROTH PUMPS WITH STEELS HOODS (WITH COLD WEATHER PLUS PACKAGE)

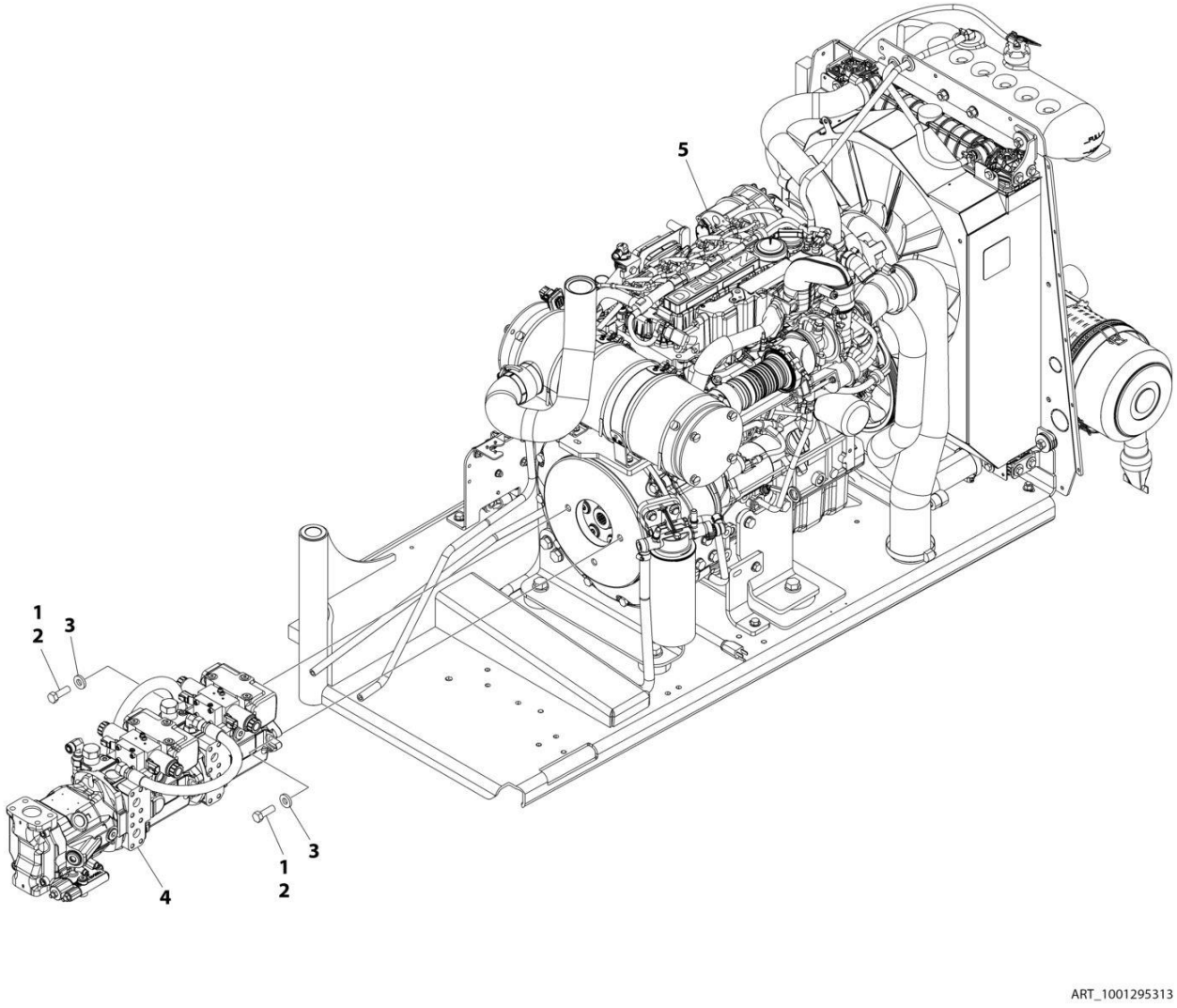

FIGURE 3-66. DEUTZ TD2.9L4 ENGINE (R96) SUB-ASSEMBLY - WITH REXROTH PUMPS WITH STEELS HOODS (WITH COLD WEATHER PLUS PACKAGE)

ITEM	PART NUMBER	QTY	DESCRIPTION	REV
	1001295313	Ref	ENGINE SUB-ASSEMBLY (R96) WITH REXROTH PUMPS	A
1	0100011	AR	Compound, Locking	
2	0641812	2	Bolt 1/2 x 1-1/2	
3	4891800	2	Washer 1/2	
4	1001152963	1	Pump Assembly - Rexroth (See Separate Breakdown in this Section)	
5	1001295235	1	Deutz TC2.9L4 (R96) Engine Assembly (See Separate Breakdown in this Section)	

FIGURE 3-67. DEUTZ TD2.9L4 ENGINE (R96) INSTALLATION- WITH SAUER PUMPS WITH STEELS HOODS (WITH COLD WEATHER PLUS PACKAGE)

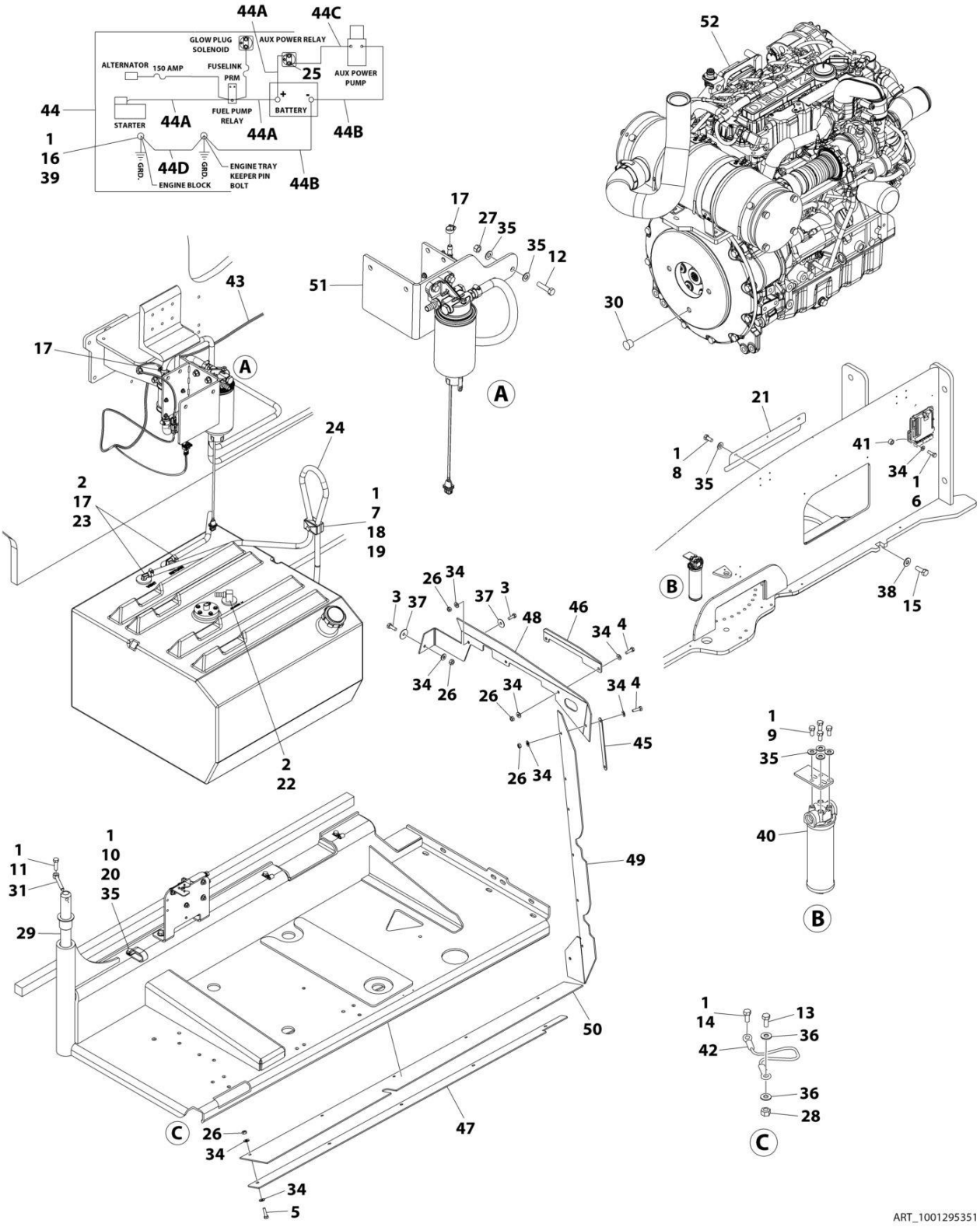

FIGURE 3-67. DEUTZ TD2.9L4 ENGINE (R96) INSTALLATION- WITH SAUER PUMPS WITH STEELS HOODS (WITH COLD WEATHER PLUS PACKAGE)

ITEM	PART NUMBER	QTY	DESCRIPTION	REV
	1001295351	Ref	ENGINE INSTALLATION (R96) WITH SAUER PUMPS	A
1	0100011	AR	Compound, Locking	
2	0100079	AR	Sealant, Pipe	
3	0641406	3	Bolt 1/4 x 3/4	
4	0641407	8	Bolt 1/4 x 7/8	
5	0641408	5	Bolt 1/4 x 1	
6	0641410	4	Bolt 1/4 x 1-1/4	
7	0641511	1	Bolt 5/16 x 1-3/8	
8	0641605	3	Bolt 3/8 x 5/8	
9	0641606	4	Bolt 3/8 x 3/4	
10	0641608	5	Bolt 3/8 x 1	
11	0641610	1	Bolt 3/8 x 1-1/4	
12	0641612	2	Bolt 3/8 x 1-1/2	
13	0641708	1	Bolt 7/16 x 1	
14	0641808	1	Bolt 1/2 x 1	
15	0642010	1	Bolt 5/8 x 1-1/4	
16	0761210	1	Bolt M12 x 20	
17	1320022	3	Clamp	
18	1320187	1	Clamp	
19	1320190	1	Clamp	
20	1321716	5	Clamp	
21	1671121	1	Cover	
22	2180832	1	Fitting, Barbed	
23	2220313	2	Fitting, 90 NPTF/Barbed	
24	2750532	6 ft /1.9 m	Hose	
25	3300220	2	Nut	
26	3311405	16	Nut 1/4	
27	3311605	2	Nut 3/8	
28	3311705	1	Nut 7/16	
29	3422446	1	Pin	
30	3520054	1	Plug	
31	3841143	1	Keeper, Pin	
32	4240018	AR	Tie-Strap (Not Shown)	
33	4460234	AR	Mount, Tie-Strap (Not Shown)	
34	4711400	33	Washer 1/4	
35	4711600	16	Washer 3/8	
36	4711700	2	Washer 7/16	
37	4740430	3	Washer	
38	4752000	1	Washer 5/8	
39	4812100	1	Washer M12	
40	1001108617	1	Filter	
40	70002231	1	Element, Filter	
41	1001110425	4	Spacer	
42	1001131542	1	Lanyard	
43	1001138491	1	Harness, Fuel (See Separate Breakdown in ELECTRICAL Section)	
44	1001141225	1	Battery Cable Kit	
44A	7027042	1	Cable, Battery (Red) (Battery + to Relays and Starter)	

SECTION 3 - ENGINE

ITEM	PART NUMBER	QTY	DESCRIPTION	REV
44B	7027043	1	Cable, Battery (Black) (Battery - to Tray Pivot Grd and Aux Pump)	
44C	7027044	1	Cable (Red) (Aux Relay to Aux Pump)	
44D	7027045	1	Cable, Battery (Black) (Engine to Tray Pivot Grd)	
45	1001167164	3	Plate	
46	1001177945	1	Bracket	
47	1001177946	1	Bracket	
48	1001177957	1	Seal	
49	1001177958	1	Seal	
50	1001177959	1	Seal	
51	1001227606	1	Bracket	
52	1001295310	1	DEUTZ TC2.9L4 (R96) Engine Sub-Assembly (with Cold Weather Plus Package) (See Separate Breakdown in this Section)	

FIGURE 3-68. DEUTZ TD2.9L4 ENGINE (R96) SUB-ASSEMBLY - WITH SAUER PUMPS WITH STEELS HOODS (WITH COLD WEATHER PLUS PACKAGE)

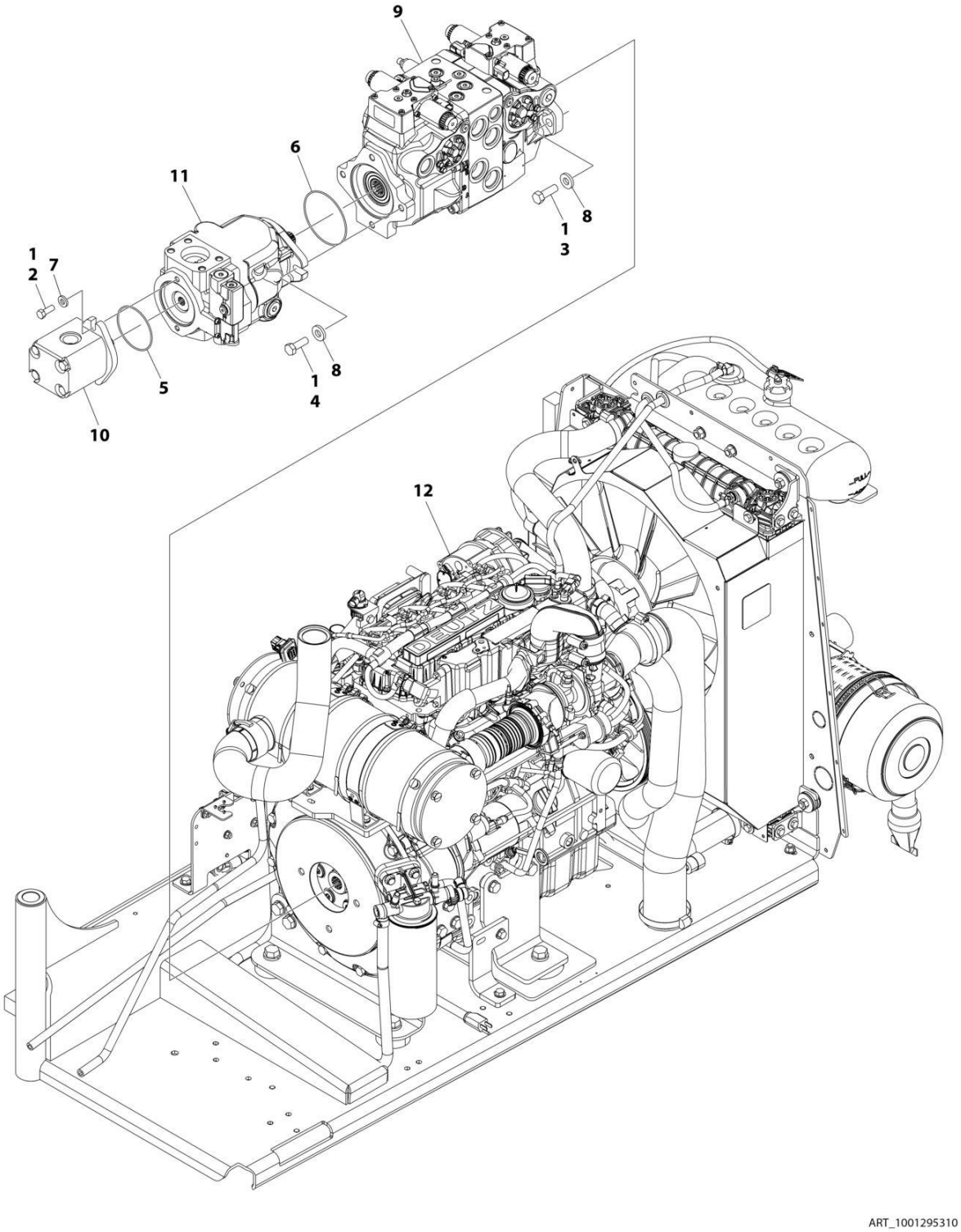

FIGURE 3-68. DEUTZ TD2.9L4 ENGINE (R96) SUB-ASSEMBLY - WITH SAUER PUMPS WITH STEELS HOODS (WITH COLD WEATHER PLUS PACKAGE)

ITEM	PART NUMBER	QTY	DESCRIPTION	REV
	1001295310	Ref	ENGINE SUB-ASSEMBLY (R96) WITH SAUER PUMPS	A
1	0100011	AR	Compound, Locking	
2	0641608	2	Bolt 3/8 x 1	
3	0641812	2	Bolt 1/2 x 1-1/2	
4	0761215	2	Bolt M12 x 35	
5	3790152	1	O-Ring	
6	3790155	1	O-Ring	
7	4891600	2	Washer 3/8	
8	4891800	4	Washer 1/2	
9	1001108616	1	Pump Assembly - Sauer Tandem (See Separate Breakdown in this Section)	
10	1001112927	1	Pump Assembly - Sauer Gear (See Separate Breakdown in this Section)	
11	1001171095	1	Pump Assembly - Sauer Piston (See Separate Breakdown in this Section)	
12	1001295235	1	Deutz TC2.9L4 (R96) Engine Assembly (See Separate Breakdown in this Section)	

FIGURE 3-69. DEUTZ TD2.9L4 ENGINE (R96) ASSEMBLY - (WITH COLD WEATHER PLUS PACKAGE)

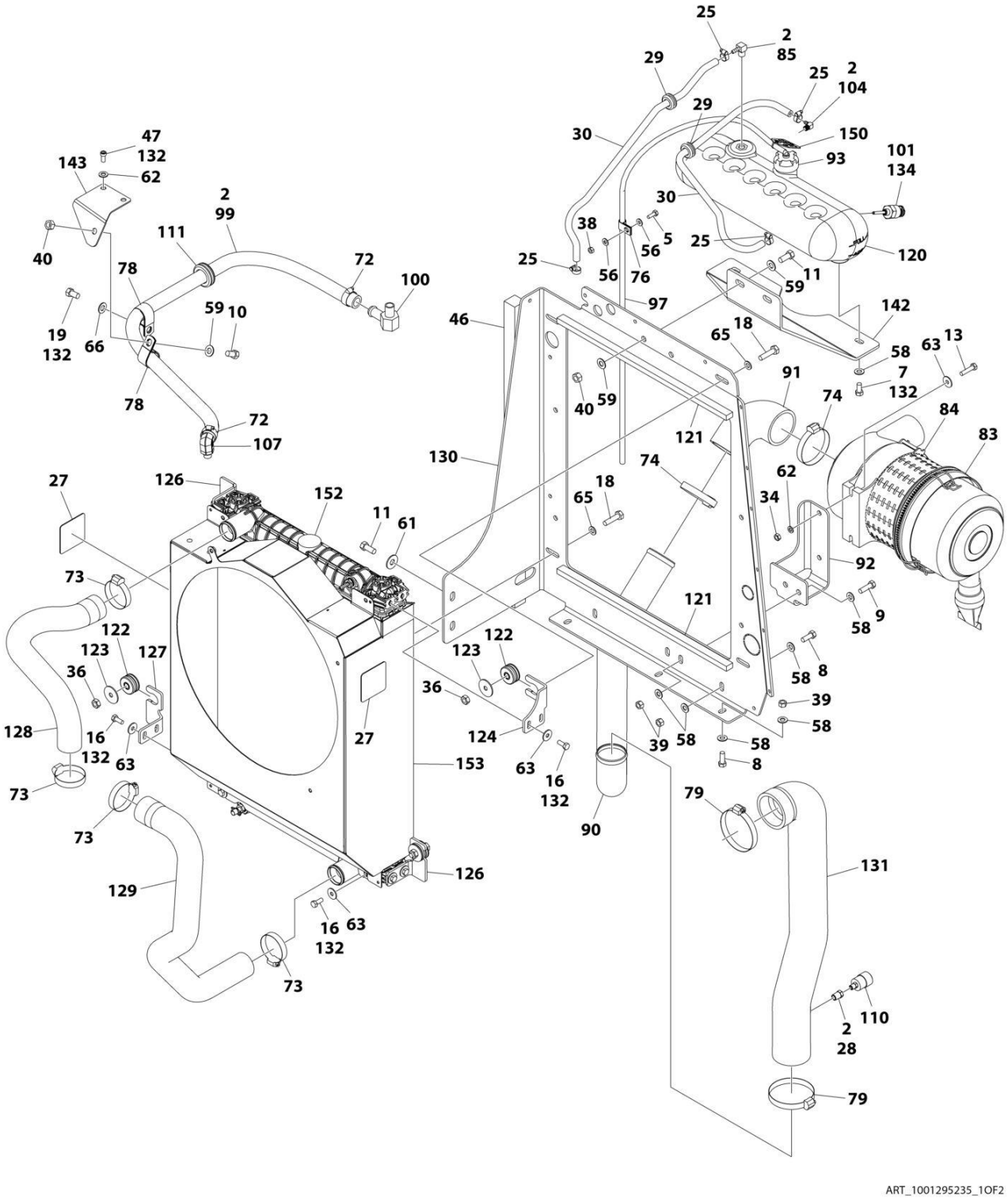

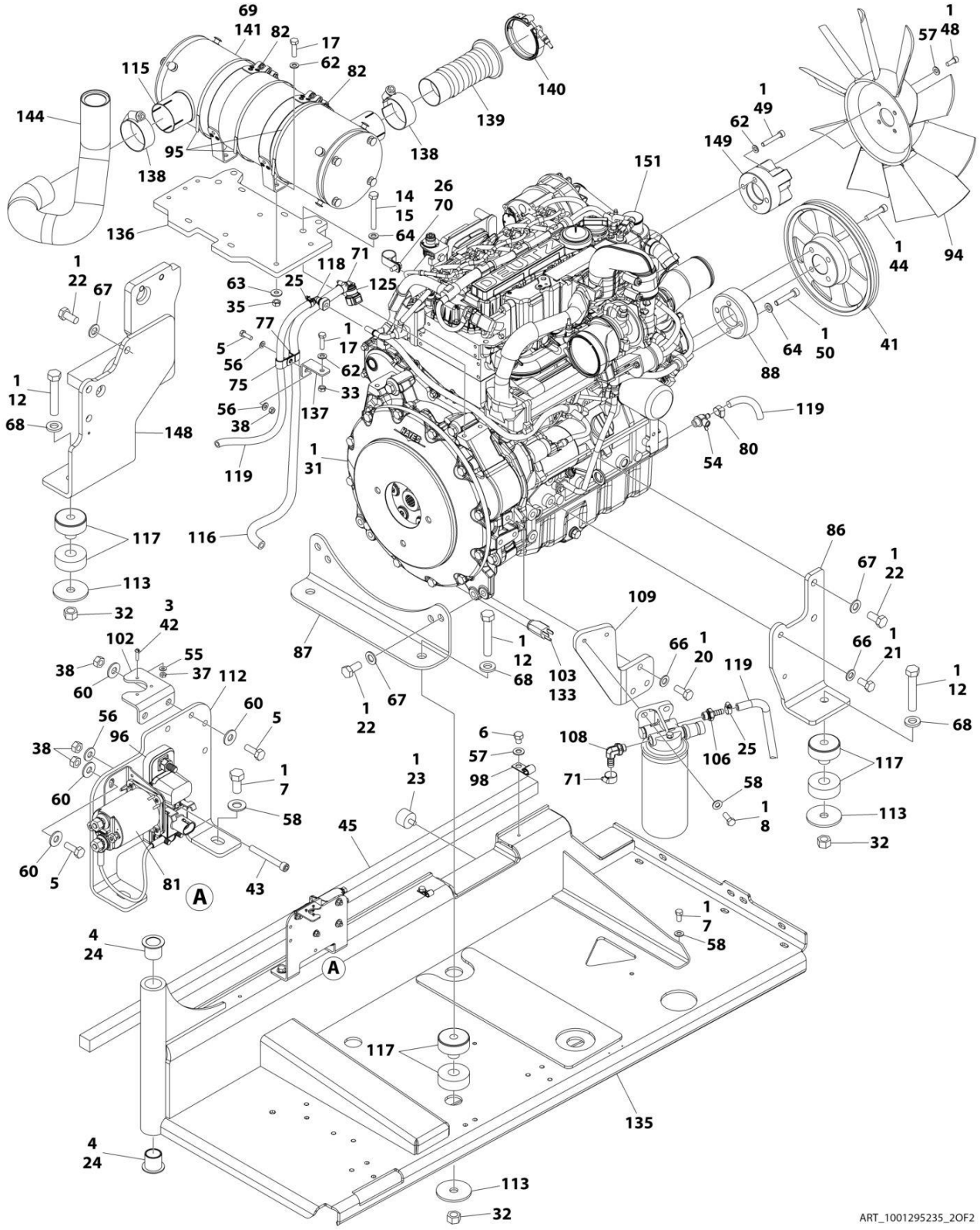
ART_1001295235_2OF2

FIGURE 3-69. DEUTZ TD2.9L4 ENGINE (R96) ASSEMBLY - (WITH COLD WEATHER PLUS PACKAGE)

ITEM	PART NUMBER	QTY	DESCRIPTION	REV
	1001295235	Ref	ENGINE SUB-ASSEMBLY (R96)	A
1	0100011	AR	Compound, Locking	
2	0100020	AR	Sealant, Pipe	
3	0100035	AR	Compound, Locking	
4	0100062	AR	Adhesive	
5	0641406	7	Bolt 1/4 x 3/4	
6	0641503	2	Bolt 5/16 x 3/8	
7	0641606	5	Bolt 3/8 x 3/4	
8	0641608	7	Bolt 3/8 x 1	
9	0641610	2	Bolt 3/8 x 1-1/4	
10	0641706	1	Bolt 7/16 x 3/4	
11	0641708	4	Bolt 7/16 x 1	
12	0682028	4	Bolt 5/8 x 3-1/2	
13	0700815	2	Bolt M8 x 35	
14	0701022	2	Bolt M10 x 70	
15	0701025	2	Bolt M10 x 85	
16	0760810	12	Bolt M8 x 20	
17	0760814	5	Bolt M8 x 30	
18	0761016	4	Bolt M10 x 40	
19	0761210	1	Bolt M12 x 20	
20	0761214	3	Bolt M12 x 30	
21	0771212	1	Bolt M12 x 25	
22	0771414	9	Bolt M14 x 30	
23	0940070	1	Bumper	
24	0961986	2	Bearing	
25	1320022	6	Clamp	
26	1320130	1	Clamp	
27	1703162	2	Decal - Fan Blade	
28	2220273	1	Fitting	
29	2540038	2	Grommet	
30	2720015	5 ft /2 m	Hose	
31	2902065	1	Pump Coupling Kit (See Separate Breakdown in this Section)	
32	3272001	4	Nut 5/8	
33	3290801	1	Nut M8	
34	3290805	2	Nut M8	
35	3290807	4	Nut M8	
36	3291007	4	Nut M10	
37	3310401	3	Nut #4	
38	3311405	8	Nut 1/4	
39	3311605	7	Nut 3/8	
40	3311705	3	Nut 7/16	
41	3580320	1	Pulley	
42	3910408	3	Screw #4 x 1/2	
43	3931432	1	Capscrew 1/4 x 2	
44	3931628	4	Capscrew 3/8 x 1-3/4	
45	3960543	1	Seal	
46	3960544	1	Seal	
47	4031907	2	Bolt M8 x 16	
48	4031908	4	Bolt M8 x 20	
49	4031912	4	Bolt M8 x 40	

ITEM	PART NUMBER	QTY	DESCRIPTION	REV
50	4032014	4	Bolt M10 x 50	
51	4240032	AR	Tie-Strap (Not Shown)	
52	4240099	AR	Tie-Strap (Not Shown)	
53	4460234	1	Mount, Tie-Strap (Not Shown)	
54	4640751	1	Valve, Oil Drain	
55	4710400	3	Washer #4	
56	4711400	7	Washer 1/4	
57	4711500	6	Washer 5/16	
58	4711600	21	Washer 3/8	
59	4711700	6	Washer 7/16	
60	4751400	8	Washer 1/4	
61	4751700	2	Washer 7/16	
62	4811900	13	Washer M8	
63	4811902	18	Washer M8	
64	4812000	8	Washer M10	
65	4812002	4	Washer M10	
66	4812100	5	Washer M12	
67	4812200	9	Washer M14	
68	4892000	4	Washer 5/8	
69	4920385	AR	Wire, Safety	
70	5250808	1	Bolt M8 x 16	
71	8405006	2	Clamp	
72	8405007	2	Clamp	
73	8405201	4	Clamp	
74	8405204	2	Clamp	
75	8406102	1	Clip	
76	8406109	2	Clip	
77	8406112	1	Clip	
78	8406302	2	Clamp	
79	8410011	2	Clamp	
80	8410013	1	Clamp	
81	1001117308	1	Contactor	
82	1001119727	2	Clamp	
83	1001133633	1	Filter, Air	
83	70024190	1	Element, Air Filter	
84	1001133634	1	Cap	
85	1001134488	1	Fitting, 90 Barbed	
86	1001135560	1	Support	
87	1001135562	1	Support	
88	1001135679	1	Adapter	
89	1001135779	1	Cable, Alternator (Not Shown)	
90	1001135903	1	Pipe	
91	1001135946	1	Coupling	
92	1001136665	1	Bracket	
93	1001136834	1	Cap	
94	1001137276	1	Fan	
95	1001137336	6	Strap	
96	1001138228	1	Relay	
97	1001138248	4 ft /1.2 m	Hose	
98	1001138253	2	Clamp	
99	1001138524	1	Hose	

SECTION 3 - ENGINE

ITEM	PART NUMBER	QTY	DESCRIPTION	REV
100	1001138559	1	Fitting, 90	
101	1001138827	1	Sensor, Coolant Level	
102	1001139240	1	Bracket	
103	1001140312	1	Heater, Block	
104	1001140564	1	Fitting, 90	
105	1001141304	1	Wire, Glow Plug (Not Shown)	
106	1001141717	1	Fitting, Straight	
107	1001141719	1	Fitting, 90	
108	1001142501	1	Fitting, 90	
109	1001142685	1	Bracket	
110	1001143390	1	Indicator	
111	1001144089	1	Grommet	
112	1001145154	1	Plate	
113	1001146219	4	Washer	
114	1001148843	1	Harness, Fuel Filter (Not Shown - See Separate Breakdown in ELECTRICAL Section)	
115	1001151432	1	Muffler	
116	1001154405	5 ft /2 m	Hose	
117	1001155575	4	Mount	
118	1001155823	1	Coupling, 90 Quick Connect	
119	1001165035	31 ft /10 m	Hose	
120	1001166393	1	Tank	
121	1001168166	4	Seal	
122	1001169054	4	Isolator	
123	1001169138	4	Pad	
124	1001170035	1	Bracket	
125	1001170982	1	Adapter	
126	1001176329	2	Bracket	
127	1001176330	1	Bracket	
128	1001176415	1	Hose	
129	1001176416	1	Hose	
130	1001178236	1	Support	
131	1001178894	1	Hose	
132	1001180620	AR	Adhesive	
133	1001181895	AR	Adhesive	
134	1001182997	AR	Adhesive	
135	1001187011	1	Tray	
136	1001221203	1	Muffler Bracket Assembly	
137	1001221205	1	Bracket	
138	1001221212	2	Clamp	
139	1001221217	1	Pipe, Flex Assembly	
140	1001221219	1	Clamp	
141	1001221427	1	Muffler-Wrap Assembly	
142	1001229599	1	Bracket	
143	1001229600	1	Plate	
144	1001257155	1	Pipe, Exhaust	
145	1001276646	1	Engine Harness (Not Shown - See Separate Breakdown in ELECTRICAL Section)	
146	1001281985	1	Connector (Not Shown)	
147	1001281986	1	Connector (Not Shown)	
148	1001283008	1	Mount	

ITEM	PART NUMBER	QTY	DESCRIPTION	REV
149	1001289964	1	Adapter	
150	1001291401	1	Tag, Coolant	
151	1001293889	1	Engine (See Separate Breakdown in this Section)	
152	1001303270	1	Cooler, Engine	
153	1001306438	1	Shroud	

SECTION 3 - ENGINE

FIGURE 3-70. DEUTZ TCD2.9L4 (STAGE V) ENGINE INSTALLATION - WITH SAUER PUMPS AND ABS HOODS (WITHOUT COLD WEATHER PLUS PACKAGE)

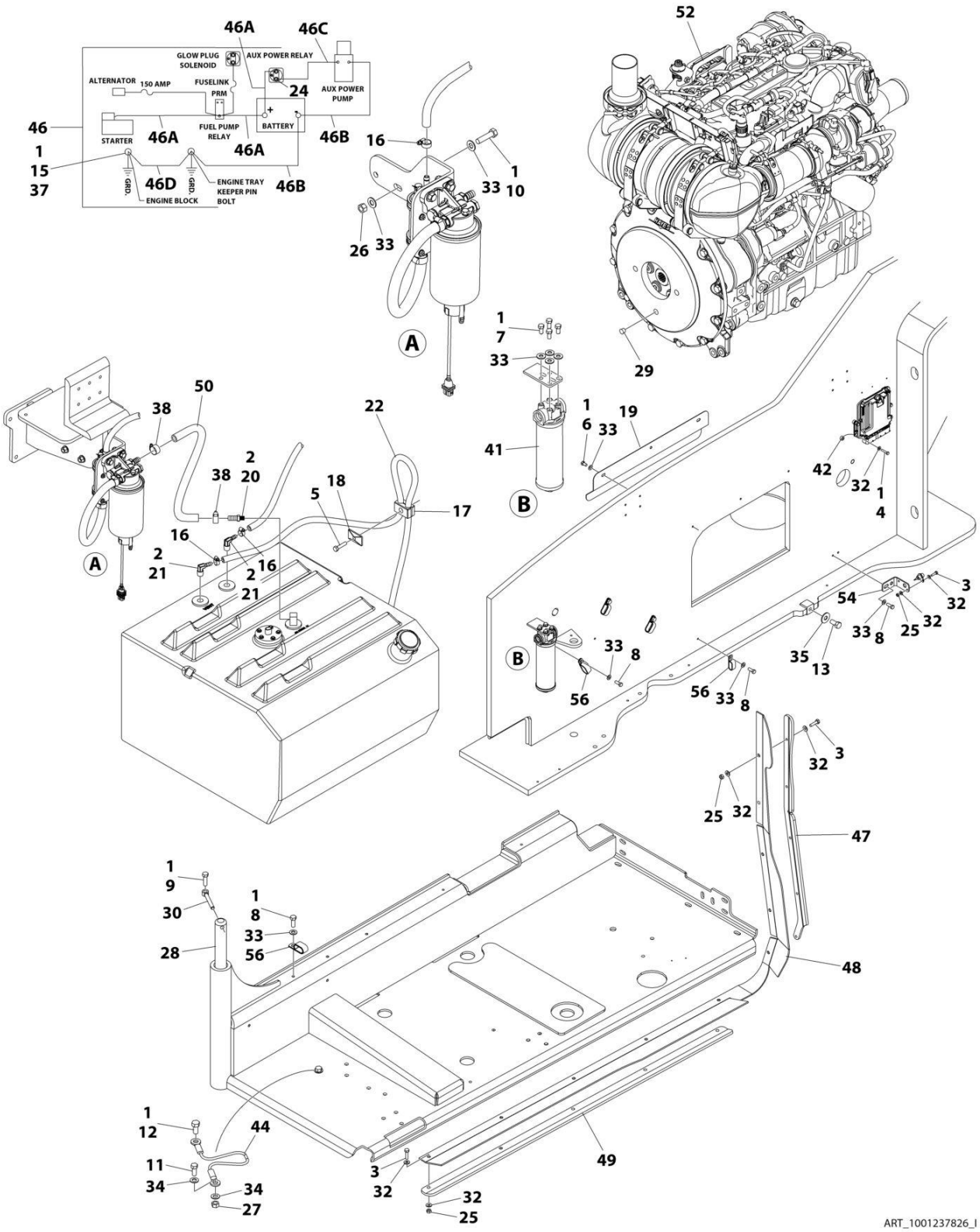

FIGURE 3-70. DEUTZ TCD2.9L4 (STAGE V) ENGINE INSTALLATION - WITH SAUER PUMPS AND ABS HOODS (WITHOUT COLD WEATHER PLUS PACKAGE)

ITEM	PART NUMBER	QTY	DESCRIPTION	REV
	1001237826	Ref	DEUTZ TCD2.9L4 (STAGE V) ENGINE INSTALLATION	I
1	0100011	AR	Compound, Locking	
2	0100079	AR	Sealant, Pipe	
3	0641408	11	Bolt 1/4 x 1	
4	0641410	4	Bolt 1/4 x 1-1/4	
5	0641511	1	Bolt 5/16 x 1-3/8	
6	0641605	3	Bolt 3/8 x 5/8	
7	0641606	4	Bolt 3/8 x 3/4	
8	0641608	7	Bolt 3/8 x 1	
9	0641610	1	Bolt 3/8 x 1-1/4	
10	0641612	2	Bolt 3/8 x 1-1/2	
11	0641708	1	Bolt 7/16 x 1	
12	0641808	1	Bolt 1/2 x 1	
13	0642010	1	Bolt 5/8 x 1-1/4	
15	0761210	1	Bolt M12 x 20	
16	1320022	3	Clamp	
17	1320187	1	Clamp	
18	1320190	1	Cover, Clamp	
19	1671121	1	Cover	
20	2180832	1	Fitting, Barbed	
21	2220313	2	Fitting, Elbow Barbed	
22	2750532	5 ft /1.5 m	Hose	
24	3300220	2	Nut 5/16	
25	3311405	11	Nut 1/4	
26	3311605	2	Nut 3/8	
27	3311705	1	Nut 7/16	
28	3422446	1	Pin, Pivot	
29	3520054	1	Plug	
30	3841143	1	Pin, Keeper	
31	4240018	AR	Strap, Tie (Not Shown)	
32	4711400	26	Washer 1/4	
33	4711600	18	Washer 3/8	
34	4711700	2	Washer 7/16	
35	4752000	1	Washer 5/8	
37	4812100	1	Washer M12	
38	8405006	2	Clamp	
41	1001108617	1	Filter	
41	70002231	1	Element, Filter	
42	1001110425	4	Spacer	
44	1001131542	1	Lanyard	
45	1001138491	NLA	Harness, Fuel (Use p/n 1001222665) (Not Shown - See Separate Breakdown in ELECTRICAL Section)	
46	1001141225	1	Battery Cable Kit	E
46A	7027042	1	Cable, Battery (Red) (Battery + to Relays and Starter)	
46B	7027043	1	Cable, Battery (Black) (Battery - to Tray Pivot Grd and Aux Pump)	
46C	7027044	1	Cable (Red) (Aux Relay to Aux Pump)	
46D	7027045	1	Cable, Battery (Black) (Engine to Tray Pivot Grd)	
47	1001145089	1	Clamp	

SECTION 3 - ENGINE

ITEM	PART NUMBER	QTY	DESCRIPTION	REV
48	1001145560	1	Panel, Rubber	
49	1001145842	1	Plate, Clamping	
50	1001154405	2 ft /0.6 m	Hose	
52	1001277608	1	Engine, Deutz TCD2.9L4 (See Separate Breakdown in this Section)	
53	1001146588	1	Strap (Not Shown)	
54	1001256879	1	Bracket	
56	1321716	5	Clamp	
57	4240099	AR	Tie-Strap (Not Shown)	
58	4460234	AR	Mount, Tie-Strap (Not Shown)	

FIGURE 3-71. DEUTZ TCD2.9L4 (STAGE V) ENGINE INSTALLATION - WITH REXROTH PUMPS AND ABS HOODS (WITHOUT COLD WEATHER PLUS PACKAGE)

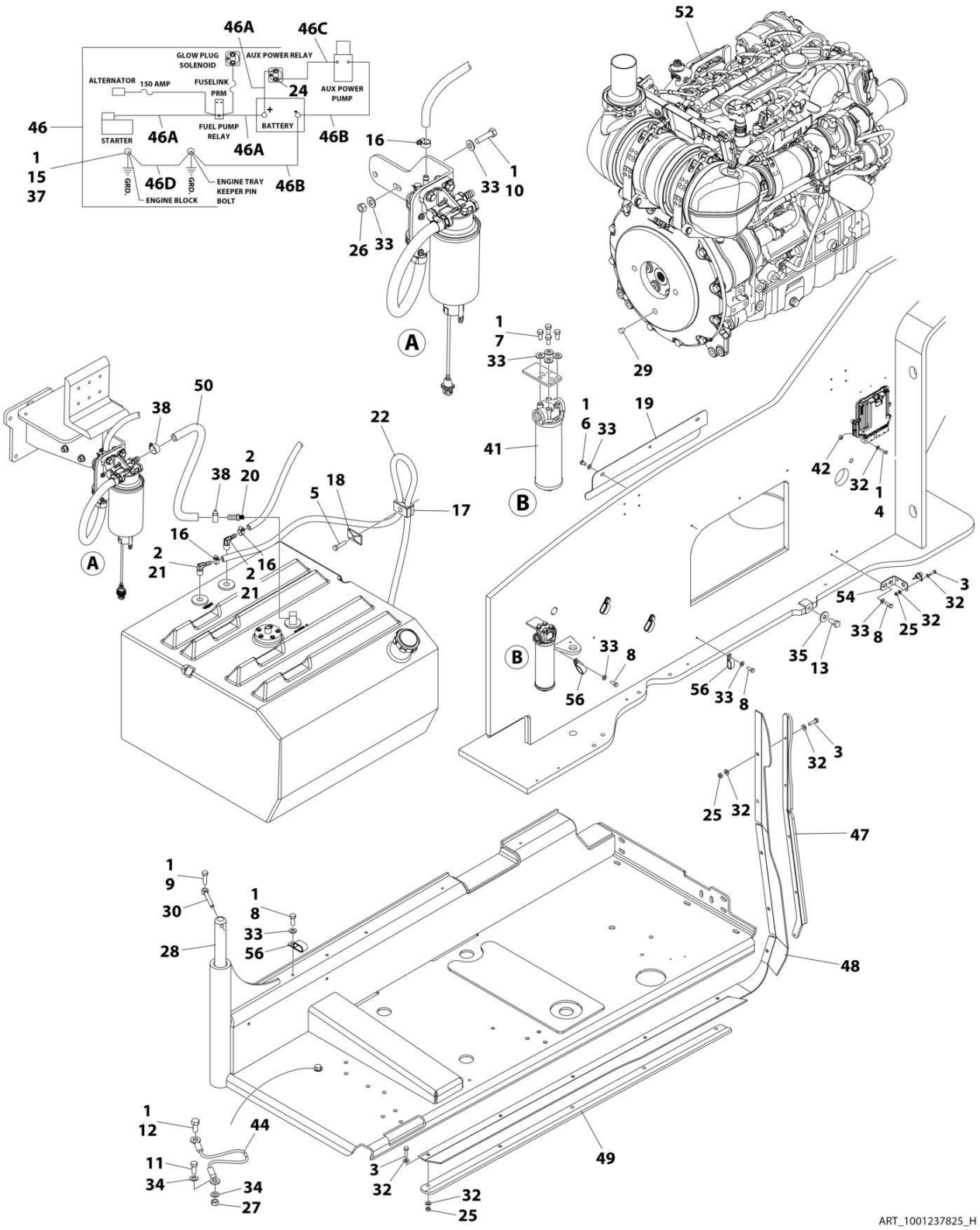

FIGURE 3-71. DEUTZ TCD2.9L4 (STAGE V) ENGINE INSTALLATION - WITH REXROTH PUMPS AND ABS HOODS (WITHOUT COLD WEATHER PLUS PACKAGE)

ITEM	PART NUMBER	QTY	DESCRIPTION	REV
	1001237825	Ref	DEUTZ TCD2.9L4 (STAGE V) ENGINE INSTALLATION	H
1	0100011	AR	Compound, Locking	
2	0100079	AR	Sealant, Pipe	
3	0641408	11	Bolt 1/4 x 1	
4	0641410	4	Bolt 1/4 x 1-1/4	
5	0641511	1	Bolt 5/16 x 1-3/8	
6	0641605	3	Bolt 3/8 x 5/8	
7	0641606	4	Bolt 3/8 x 3/4	
8	0641608	7	Bolt 3/8 x 1	
9	0641610	1	Bolt 3/8 x 1-1/4	
10	0641612	2	Bolt 3/8 x 1-1/2	
11	0641708	1	Bolt 7/16 x 1	
12	0641808	1	Bolt 1/2 x 1	
13	0642010	1	Bolt 5/8 x 1-1/4	
15	0761210	1	Bolt M12 x 20	
16	1320022	3	Clamp	
17	1320187	1	Clamp	
18	1320190	1	Cover, Clamp	
19	1671121	1	Cover	
20	2180832	1	Fitting, Barbed	
21	2220313	2	Fitting, Elbow Barbed	
22	2750532	5 ft /1.5 m	Hose	
24	3300220	2	Nut 5/16	
25	3311405	11	Nut 1/4	
26	3311605	2	Nut 3/8	
27	3311705	1	Nut 7/16	
28	3422446	1	Pin, Pivot	
29	3520054	1	Plug	
30	3841143	1	Pin, Keeper	
31	4240018	AR	Strap, Tie (Not Shown)	
32	4711400	26	Washer 1/4	
33	4711600	18	Washer 3/8	
34	4711700	2	Washer 7/16	
35	4752000	1	Washer 5/8	
37	4812100	1	Washer M12	
38	8405006	2	Clamp	
41	1001108617	1	Filter	
41	70002231	1	Element, Filter	
42	1001110425	4	Spacer	
44	1001131542	1	Lanyard	
45	1001138491	NLA	Harness, Fuel (Use p/n 1001222665) (Not Shown - See Separate Breakdown in ELECTRICAL Section)	
46	1001141225	1	Battery Cable Kit	E
46A	7027042	1	Cable, Battery (Red) (Battery + to Relays and Starter)	
46B	7027043	1	Cable, Battery (Black) (Battery - to Tray Pivot Grd and Aux Pump)	
46C	7027044	1	Cable (Red) (Aux Relay to Aux Pump)	
46D	7027045	1	Cable, Battery (Black) (Engine to Tray Pivot Grd)	
47	1001145089	1	Clamp	

SECTION 3 - ENGINE

ITEM	PART NUMBER	QTY	DESCRIPTION	REV
48	1001145560	1	Panel, Rubber	
49	1001145842	1	Plate, Clamping	
50	1001154405	2 ft /0.6 m	Hose	
52	1001277607	1	Engine, Deutz TCD2.9L4 (See Separate Breakdown in this Section)	
53	1001146588	1	Strap (Not Shown)	
54	1001256879	1	Bracket	
56	1321716	5	Clamp	
57	4240099	AR	Tie-Strap (Not Shown)	
58	4460234	AR	Mount, Tie-Strap (Not Shown)	

FIGURE 3-72. DEUTZ TCD2.9L4 (STAGE V) ENGINE INSTALLATION - WITH PMP PUMP AND ABS HOODS (WITHOUT COLD WEATHER PLUS PACKAGE)

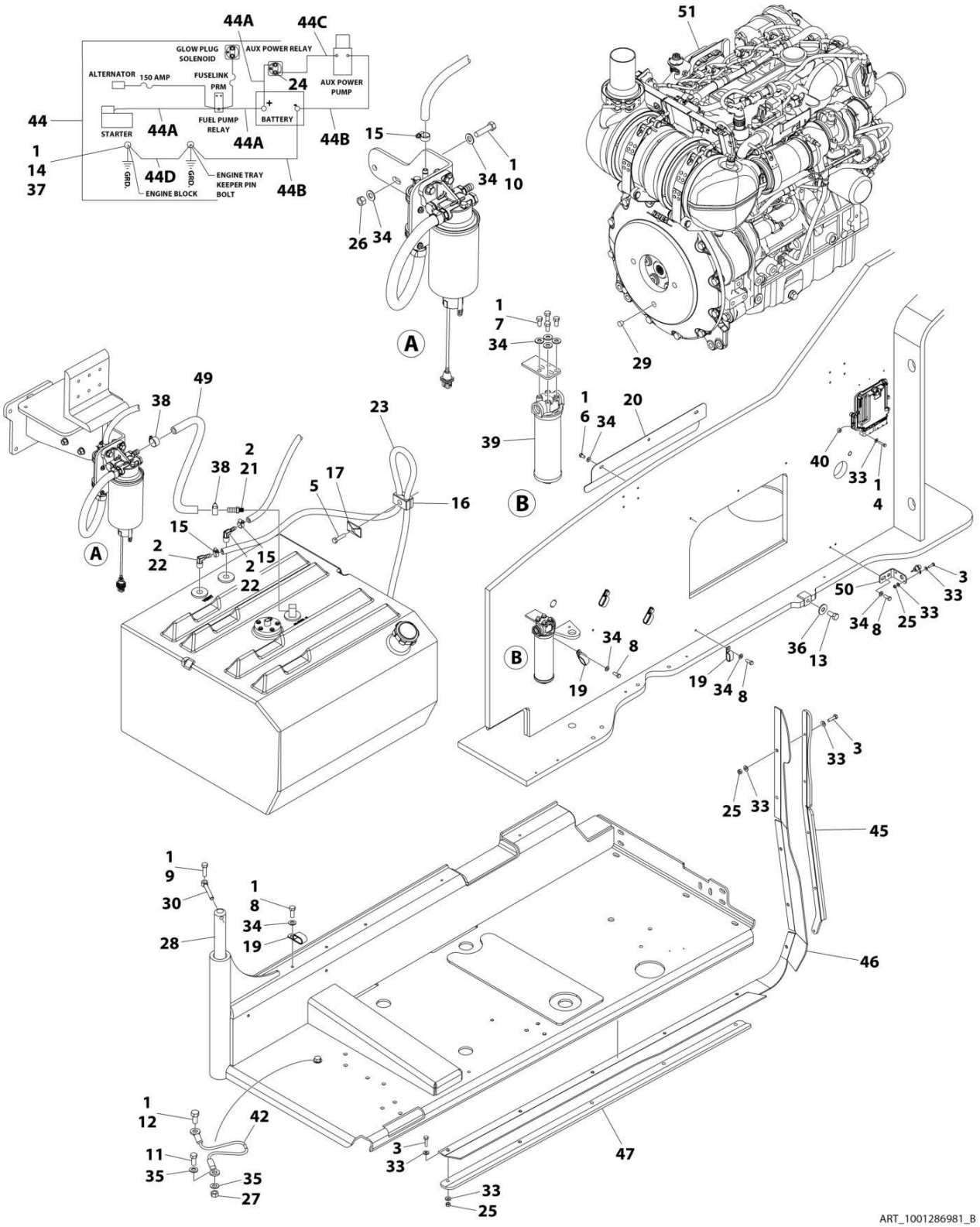

FIGURE 3-72. DEUTZ TCD2.9L4 (STAGE V) ENGINE INSTALLATION - WITH PMP PUMP AND ABS HOODS (WITHOUT COLD WEATHER PLUS PACKAGE)

ITEM	PART NUMBER	QTY	DESCRIPTION	REV
	1001286981	Ref	DEUTZ D2.9L4 - (STAGE V) ENGINE INSTALLATION WITH PMP PUMPS AND ABS HOODS (WITHOUT COLD WEATHER PLUS PACKAGE)	B
1	0100011	AR	Compound, Locking	
2	0100079	AR	Sealant, Pipe	
3	0641408	11	Bolt 1/4 x 1	
4	0641410	4	Bolt 1/4 x 1-1/4	
5	0641511	1	Bolt 5/16 x 1-3/8	
6	0641605	3	Bolt 3/8 x 5/8	
7	0641606	4	Bolt 3/8 x 3/4	
8	0641608	7	Bolt 3/8 x 1	
9	0641610	1	Bolt 3/8 x 1-1/4	
10	0641612	2	Bolt 3/8 x 1-1/2	
11	0641708	1	Bolt 7/16 x 1	
12	0641808	1	Bolt 1/2 x 1	
13	0642010	1	Bolt 5/8 x 1-1/4	
14	0761210	1	Bolt M12 x 20	
15	1320022	3	Clamp	
16	1320187	1	Clamp	
17	1320190	1	Clamp	
19	1321716	5	Clamp	
20	1671121	1	Cover	
21	2180832	1	Fitting, Barbed	
22	2220313	2	Fitting, 90 NPTF/Barbed	
23	2750532	5 ft /1.6 m	Hose	
24	3300220	2	Nut	
25	3311405	11	Nut 1/4	
26	3311605	2	Nut 3/8	
27	3311705	1	Nut 7/16	
28	3422446	1	Pin	
29	3520054	1	Plug	
30	3841143	1	Keeper, Pin	
31	4240018	AR	Tie-Strap (Not Shown)	
32	4240099	AR	Tie-Strap (Not Shown)	
33	4711400	26	Washer 1/4	
34	4711600	18	Washer 3/8	
35	4711700	2	Washer 7/16	
36	4752000	1	Washer 5/8	
37	4812100	1	Washer M12	
38	8405006	2	Clamp	
39	1001108617	1	Filter	
39	70002231	1	Element, Filter	
40	1001110425	4	Spacer	
42	1001131542	1	Lanyard	
43	1001138491	1	Harness, Fuel (Not Shown) (See Separate Breakdown in ELECTRICAL Section)	
44	1001141225	1	Battery Cable Kit	
44A	7027042	1	Cable, Battery (Red) (Battery + to Relays and Starter)	
44B	7027043	1	Cable, Battery (Black) (Battery - to Tray Pivot Grd and Aux Pump)	

ITEM	PART NUMBER	QTY	DESCRIPTION	REV
44C	7027044	1	Cable (Red) (Aux Relay to Aux Pump)	
44D	7027045	1	Cable, Battery (Black) (Engine to Tray Pivot Grd)	
45	1001145089	1	Clamp	
46	1001145560	1	Panel	
47	1001145842	1	Plate	
48	1001146588	1	Tie-Strap (Not Shown)	
49	1001154405	2 ft /0.6 m	Hose	
50	1001256879	1	Bracket	
51	1001286982	1	Engine Sub-Assembly (See Separate Breakdown in this Section)	
52	4460234	AR	Mount, Tie-Strap (Not Shown)	

FIGURE 3-73. DEUTZ TCD2.9L4 (STAGE V) ENGINE SUB-ASSEMBLY - WITH SAUER PUMP AND ABS HOODS (WITHOUT COLD WEATHER PLUS PACKAGE)

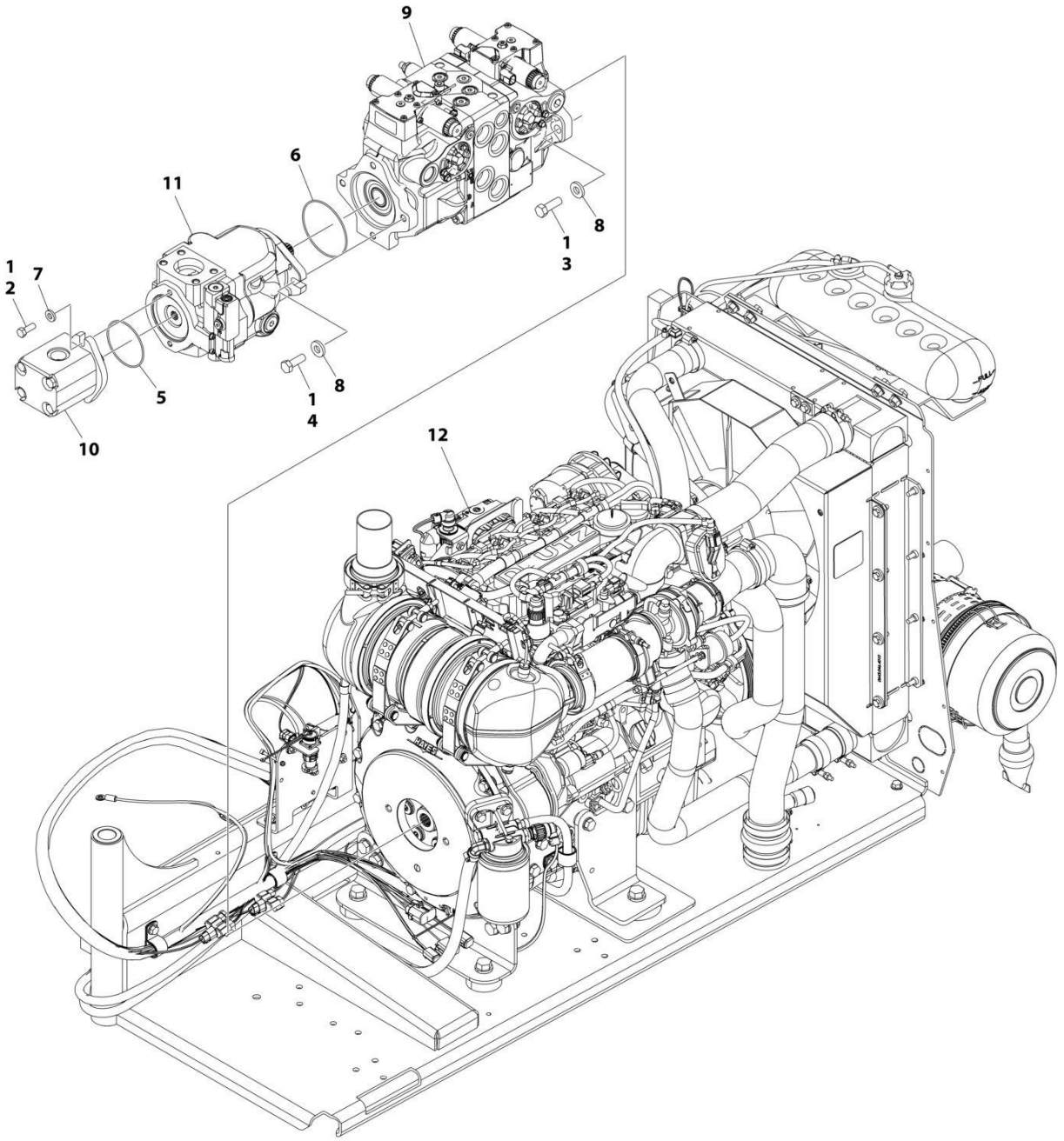

FIGURE 3-73. DEUTZ TCD2.9L4 (STAGE V) ENGINE SUB-ASSEMBLY - WITH SAUER PUMP AND ABS HOODS (WITHOUT COLD WEATHER PLUS PACKAGE)

ITEM	PART NUMBER	QTY	DESCRIPTION	REV
	1001277608	Ref	DEUTZ TCD2.9L4 (STAGE V) ENGINE SUB-ASSEMBLY	F
1	0100011	AR	Compound, Locking	
2	0641608	2	Bolt 3/8 x 1	
3	0641814	2	Bolt 1/2 x 1-3/4	
4	0761215	2	Bolt M12 x 35	
5	3790152	1	O-Ring	
6	3790155	1	O-Ring	
7	4891600	2	Washer 3/8	
8	4891800	4	Washer 1/2	
9	1001108616	1	Pump Assembly - Tandem (See Separate Breakdown in this Section)	
10	1001112927	1	Pump Assembly - Gear (See Separate Breakdown in this Section)	
11	1001171095	1	Pump Assembly - Piston (See Separate Breakdown in this Section)	
12	1001277599	1	Engine Assembly (See Separate Breakdown in this Section)	

FIGURE 3-74. DEUTZ TCD2.9L4 (STAGE V) ENGINE SUB-ASSEMBLY - WITH REXROTH PUMP AND ABS HOODS (WITHOUT COLD WEATHER PLUS PACKAGE)

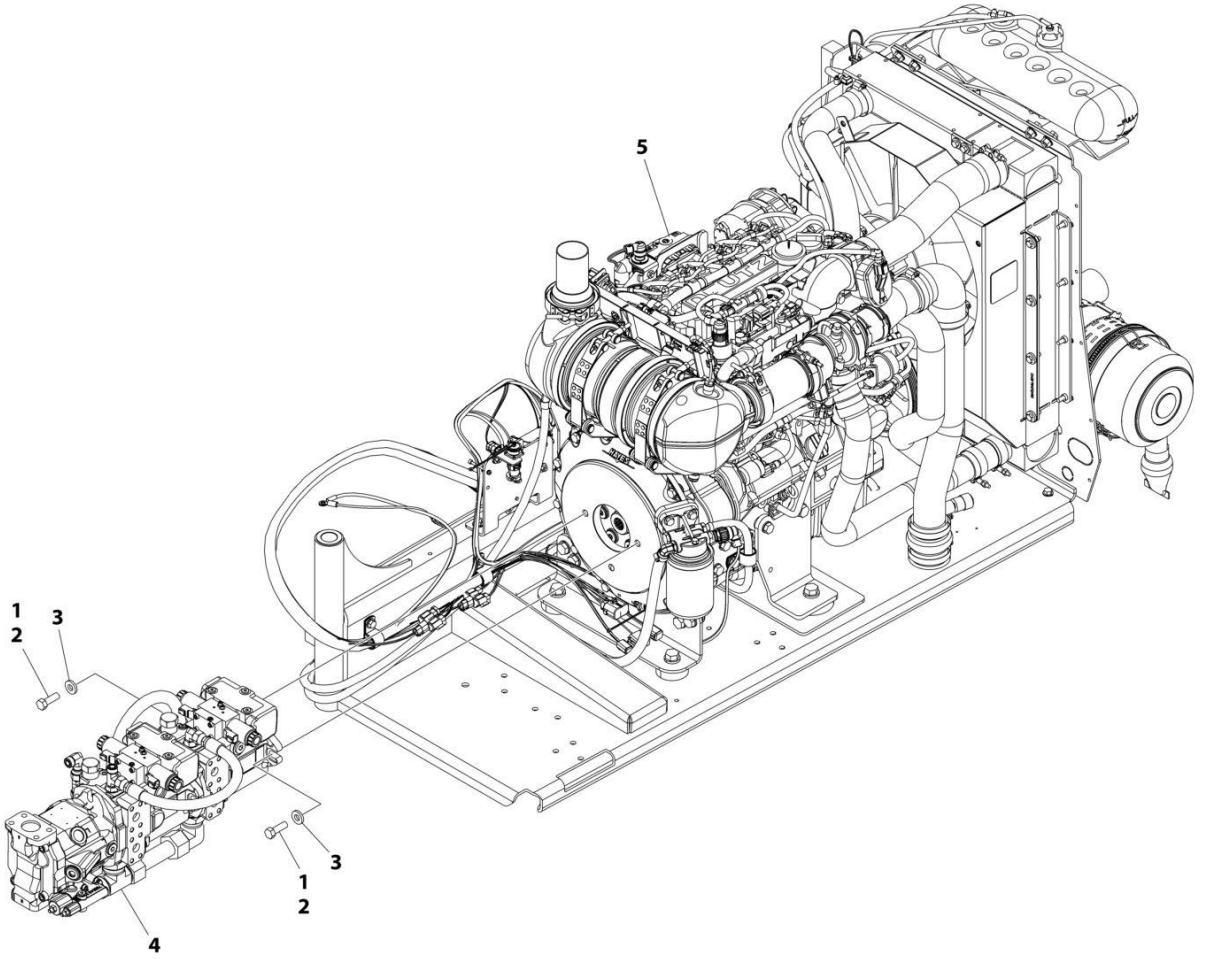

FIGURE 3-74. DEUTZ TCD2.9L4 (STAGE V) ENGINE SUB-ASSEMBLY - WITH REXROTH PUMP AND ABS HOODS (WITHOUT COLD WEATHER PLUS PACKAGE)

ITEM	PART NUMBER	QTY	DESCRIPTION	REV
	1001277607	Ref	DEUTZ TCD2.9L4 (STAGE V) ENGINE SUB-ASSEMBLY	E
1	0100011	AR	Compound, Locking	
2	0641814	2	Bolt 1/2 x 1-3/4	
3	4891800	2	Washer 1/2	
4	1001152963	1	Pump Assembly (See Separate Breakdown in this Section)	
5	1001277599	1	Engine Assembly (See Separate Breakdown in this Section)	

FIGURE 3-75. DEUTZ D2.9L4 (STAGE V) ENGINE SUB-ASSEMBLY WITH PMP PUMP AND ABS HOODS (WITHOUT COLD WEATHER PLUS PACKAGE)

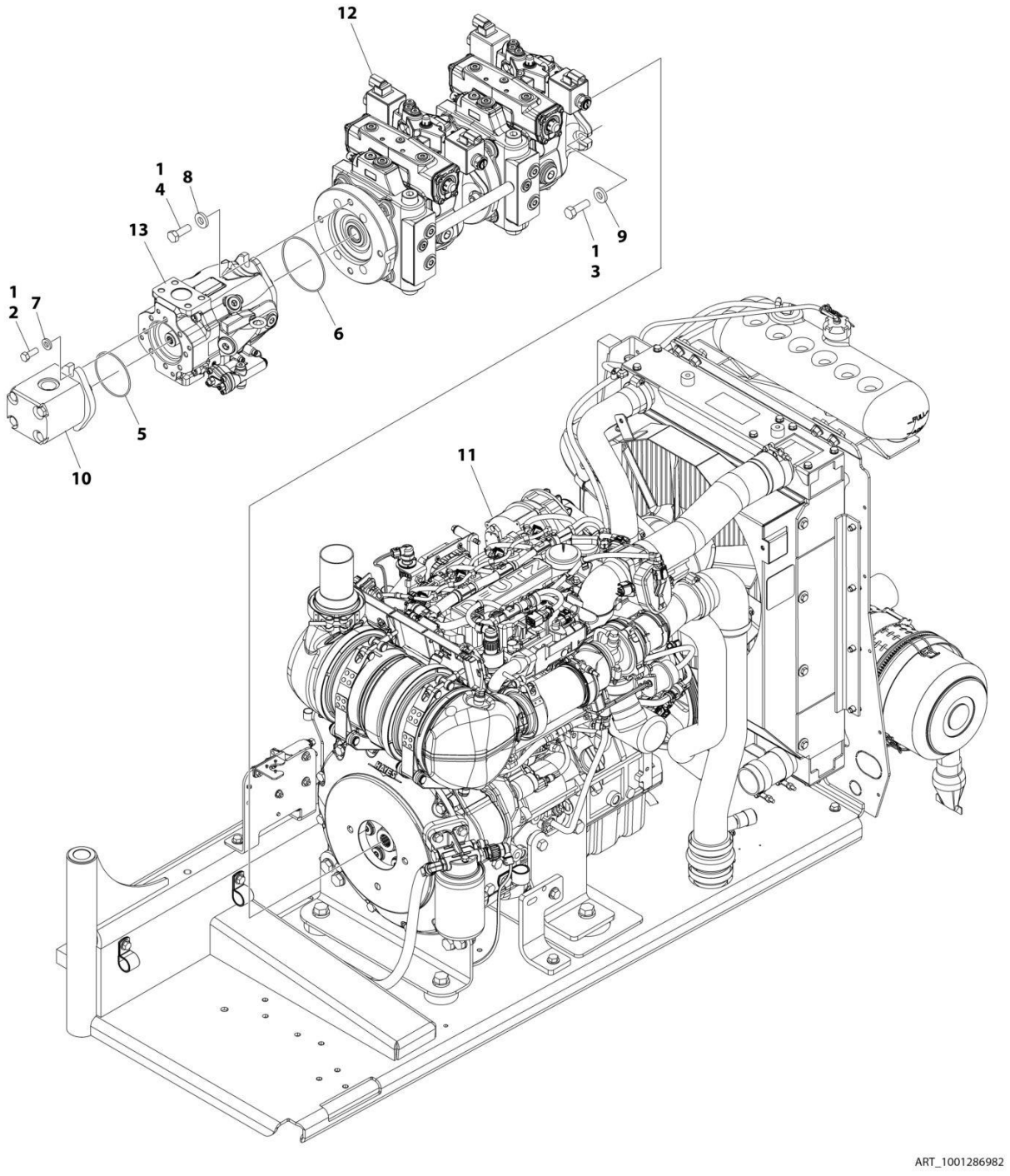

FIGURE 3-75. DEUTZ D2.9L4 (STAGE V) ENGINE SUB-ASSEMBLY WITH PMP PUMP AND ABS HOODS (WITHOUT COLD WEATHER PLUS PACKAGE)

ITEM	PART NUMBER	QTY	DESCRIPTION	REV
	1001286982	Ref	ENGINE SUB-ASSEMBLY (STAGE V) WITH PMP PUMPS AND ABS HOODS (WITHOUT COLD WEATHER PLUS PACKAGE)	B
1	0100011	AR	Compound, Locking	
2	0641608	2	Bolt 3/8 x 1	
3	0641812	2	Bolt 1/2 x 1-1/2	
4	0761215	2	Bolt M12 x 35	
5	3790152	1	O-Ring	
6	3790155	1	O-Ring	
7	4891600	2	Washer 3/8	
8	4891800	2	Washer 1/2	
9	8310056	2	Washer	
10	1001112927	1	Pump Assembly - Sauer Gear (See Separate Breakdown in this Section)	
11	1001277599	1	Engine Assembly (See Separate Breakdown in this Section)	
12	1001286957	1	Pump Assembly - Hydraulic Tandem (See Separate Breakdown in this Section)	
13	1001286958	1	Pump Assembly - Hydraulic Piston (See Separate Breakdown in this Section)	

FIGURE 3-76. DEUTZ TCD2.9L4 (STAGE V) ENGINE ASSEMBLY (WITHOUT COLD WEATHER PLUS PACKAGE)

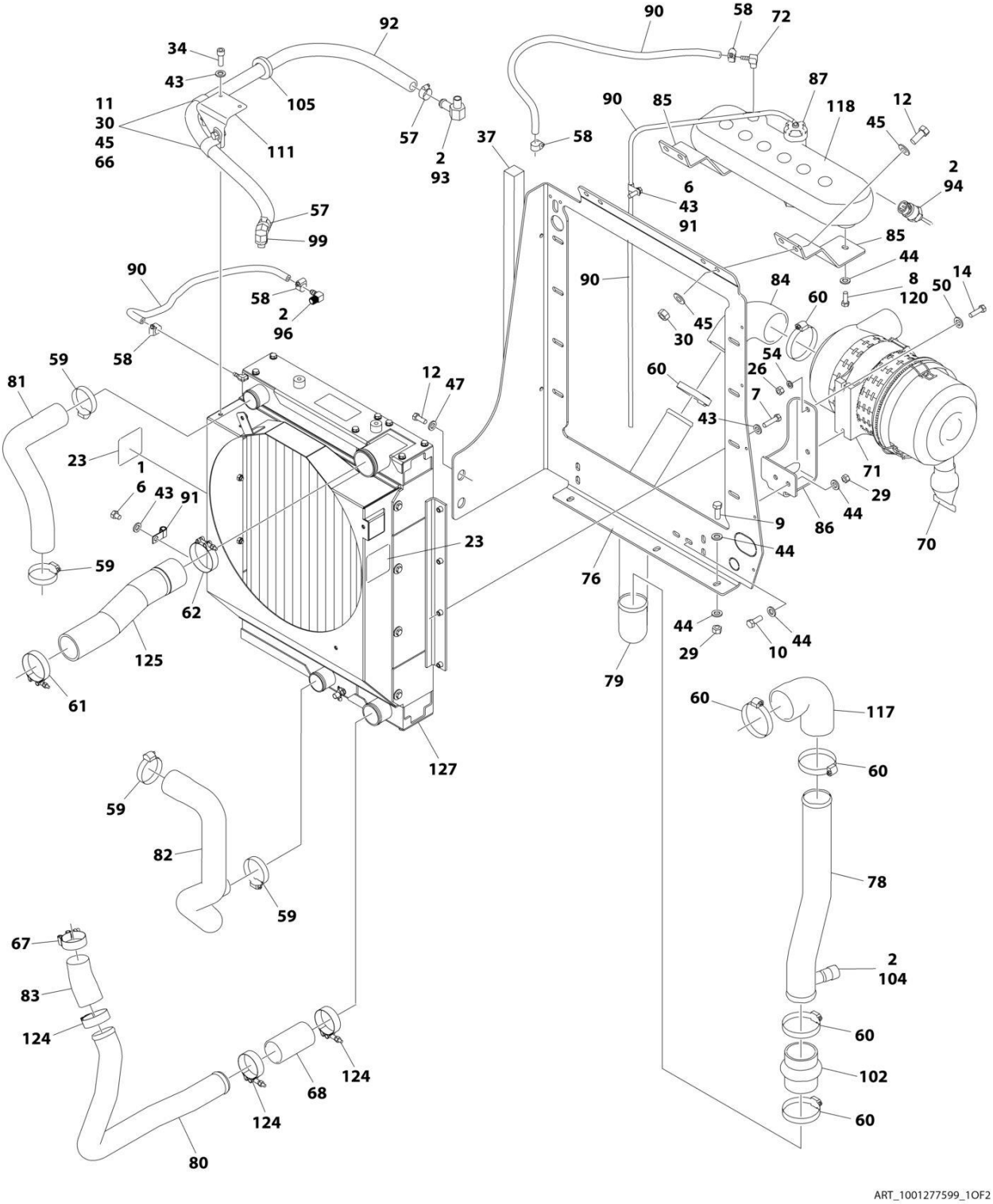

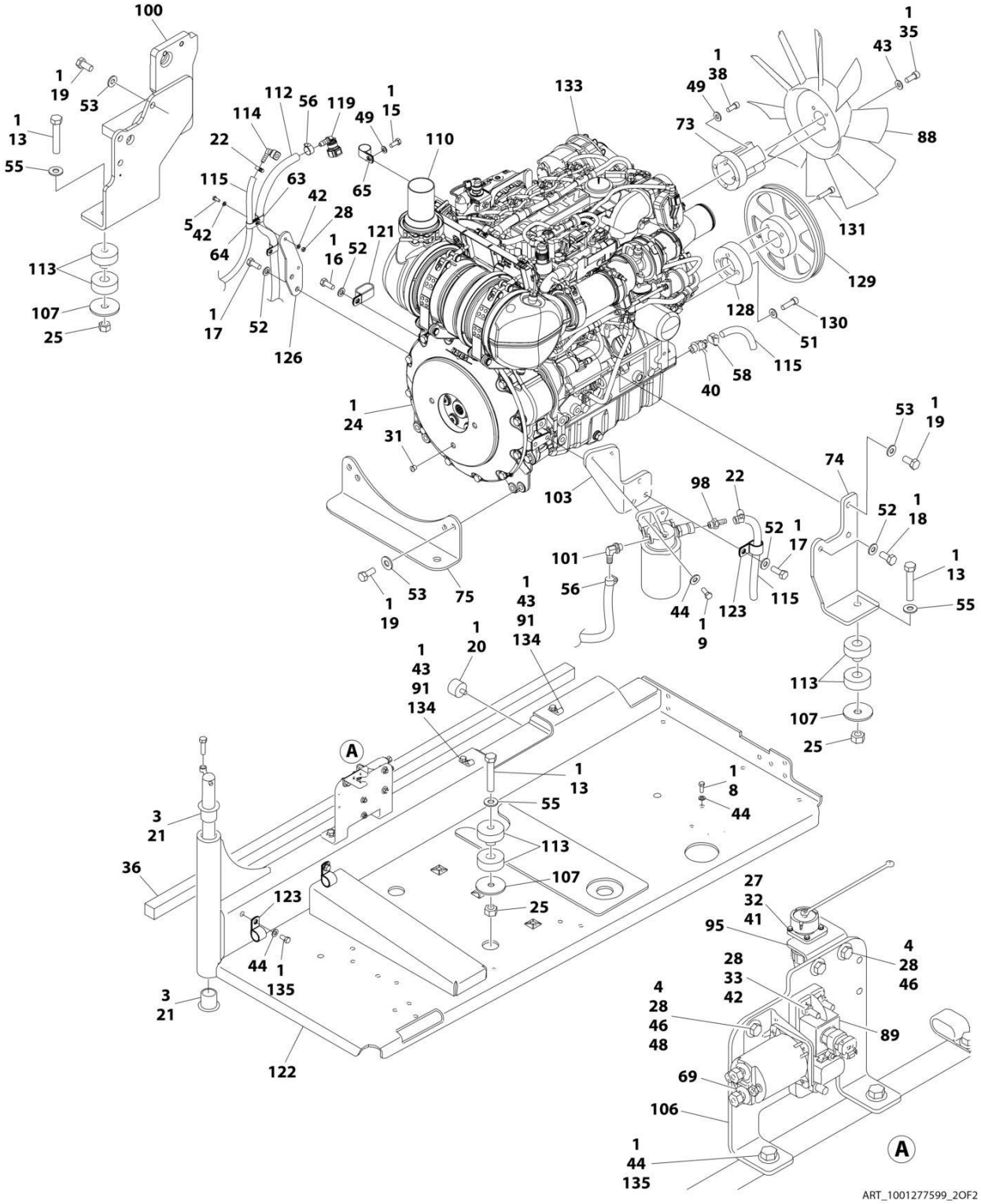
100
1
19
53
1
13
55
113
107
25
112
56
119
114
22
115
63
42
5
42
64
28
1
16
52
121
1
17
52
126
1
15
49
65
110
133
1
38
49
73
1
35
43
88
131
129
128
130
51
115
58
40
1
24
31
103
74
53
1
19
98
22
52
1
17
1
18
52
101
56
44
1
9
123
115
1
13
55
1
19
53
75
1
43
91
134
1
20
1
43
91
134
113
107
25
A
1
13
55
1
8
44
3
21
36
123
44
1
135
3
21
122
113
107
25
27
32
41
95
4
28
28
46
28
33
42
4
28
46
48
89
69
106
1
44
135
A
ART_1001277599_2OF2

FIGURE 3-76. DEUTZ TCD2.9L4 (STAGE V) ENGINE ASSEMBLY (WITHOUT COLD WEATHER PLUS PACKAGE)

ITEM	PART NUMBER	QTY	DESCRIPTION	REV
	1001277599	Ref	DEUTZ TCD2.9L4 (STAGE V) ENGINE ASSEMBLY	D
1	0100011	AR	Compound, Locking	
2	0100020	AR	Sealant	
3	0100062	AR	Adhesive	
4	0641406	4	Bolt 1/4 x 3/4	
5	0641407	2	Bolt 1/4 x 7/8	
6	0641503	1	Bolt 5/16 x 3/8	
7	0641508	8	Bolt 5/16 x 1-1/4	
8	0641606	3	Bolt 3/8 x 3/4	
9	0641608	9	Bolt 3/8 x 1	
10	0641610	2	Bolt 3/8 x 1-1/4	
11	0641706	2	Bolt 7/16 x 3/4	
12	0641708	6	Bolt 7/16 x 1	
13	0682028	4	Bolt 5/8 x 3-1/2 Grade 8	
14	0700815	2	Bolt M8 x 35	
15	0760808	1	Bolt M8 x 16	
16	0761212	1	Bolt M12 x 25	
17	0761214	5	Bolt M12 x 30	
18	0771212	1	Bolt M12 x 25 Grade 10.9	
19	0771414	9	Bolt M14 x 30 Grade 10.9	
20	0940070	1	Bumper	
21	0961986	2	Bushing, Flanged	
22	1320022	2	Clamp	
23	1703162	2	Decal - Fan	
24	2902065	1	Pump Coupling Kit (See Separate Breakdown in this Section)	
25	3272001	4	Nut 5/8 Grade 8	
26	3290801	2	Nut M8	
27	3310401	3	Nut #4	
28	3311405	7	Nut, Lock 1/4	
29	3311605	9	Nut, Lock 3/8	
30	3311705	5	Nut, Lock 7/16	
31	3520054	1	Plug, Hole	
32	3910408	3	Screw #4 x 1/2	
33	3931432	1	Capscrew 1/4 x 2	
34	3931508	2	Capscrew 5/16 x 1/2	
35	3931512	4	Capscrew 5/16 x 3/4	
36	3960543	1	Seal	
37	3960544	1	Seal	
38	4031914	4	Bolt M8 x 50	
39	4240099	AR	Tie-Strap (Not Shown)	
40	4640751	1	Valve, Oil Drain	
41	4710400	3	Washer #4	
42	4711400	5	Washer 1/4	
43	4711500	17	Washer 5/16	
44	4711600	27	Washer 3/8	
45	4711700	10	Washer 7/16	
46	4751400	8	Washer 1/4	
47	4751700	2	Washer 7/16	
48	4791400	2	Starwasher 1/4	

ITEM	PART NUMBER	QTY	DESCRIPTION	REV
49	4811900	5	Washer M8	
50	4811902	2	Washer M8	
51	4812000	4	Washer M10	
52	4812100	7	Washer M12	
53	4812200	9	Washer M14	
54	4831900	2	Washer, Lock M8	
55	4892000	4	Washer 5/8	
56	8405006	2	Clamp	
57	8405007	2	Clamp	
58	8405009	5	Clamp	
59	8405201	4	Clamp	
60	8405204	6	Clamp	
61	8405212	1	Clamp	
62	8405213	1	Clamp	
63	8406102	2	Clip	
64	8406112	1	Clip	
65	8406201	1	Clip	
66	8406302	2	Clamp	
67	8410014	1	Clamp	
68	91563070	1	Coupling, Rubber	
69	1001117308	1	Relay	
70	1001133633	1	Air Cleaner Assembly	
70	70024190	1	Element, Air Filter	
71	1001133634	1	Clamp	
72	1001134488	1	Fitting, 90 Barbed	
73	1001135138	1	Spacer, Fan	
74	1001135560	1	Support, Engine	
75	1001135562	1	Support, Engine - Rear	
76	1001135680	1	Support, Radiator	
77	1001135779	1	Cable, Alternator Positive (Not Shown)	
78	1001135901	1	Pipe, Air Intake	
79	1001135903	1	Pipe, Air Intake	
80	1001135913	1	Pipe, Turbo to Air Cleaner	
81	1001135924	1	Hose, Radiator (Upper)	
82	1001135926	1	Pipe, Radiator (Lower)	
83	1001135943	1	Coupling, Rubber	
84	1001135946	1	Elbow, Rubber	
85	1001136626	2	Bracket	
86	1001136665	1	Bracket	
87	1001136834	1	Cap, Tank	
88	1001137276	1	Fan	
89	1001138228	1	Module, Power	
89	70023592	1	Fuse 20Amp (Switched Output)	
89	70023593	1	Fuse 30Amp (Battery Output)	
90	1001138248	8.6 ft/ 2.59m	Tubing	
91	1001138253	5	Clamp	
92	1001138524	1	Hose	
93	1001138559	1	Fitting, 90	
94	1001138827	1	Sensor, Coolant Level	
95	1001139240	1	Bracket	
96	1001140564	1	Fitting, 90 Barbed	

SECTION 3 - ENGINE

ITEM	PART NUMBER	QTY	DESCRIPTION	REV
97	1001141304	1	Wire, Glow Plug (Not Shown)	
98	1001141717	1	Fitting, Straight	
99	1001141719	1	Fitting, 90 Barbed	
100	1001283008	1	Support, Engine	
101	1001142501	1	Fitting, 90 Barbed	
102	1001142637	1	Hose, Hump	
103	1001142685	1	Bracket	
104	1001143390	1	Indicator, Air Filter Service	
105	1001144089	1	Grommet	
106	1001145154	1	Plate, Mounting	
107	1001146219	4	Washer Special	
108	1001146588	AR	Tie-Strap (Not Shown)	
109	1001148843	1	Harness, Fuel Filter (Not Shown - See Separate Breakdown in ELECTRICAL Section)	
110	1001153024	1	Pipe, Exhaust	
111	1001153387	1	Plate	
112	1001154405	4.7 ft/ 1.44m	Hose	
113	1001155575	4	Mount, Motor	
114	1001155823	1	Coupling	
115	1001165035	30.5 ft/ 9.3m	Hose	
116	1001165101	1	Fuel Pump/Bracket Assembly (Not Shown - See Separate breakdown in this Section)	
117	1001165820	1	Pipe, Elbow	
118	1001166393	1	Tank, Surge	
119	1001170982	1	Adapter	
120	1001180620	AR	Adhesive	
121	1001181899	1	Clamp	
122	1001191272	1	Tray	
123	1001191620	3	Clamp	
124	1001208299	3	Clamp	
125	1001233492	1	Hose	
126	1001235952	1	Bracket	
127	1001256864	1	Radiator	
128	1001258800	1	Spacer, Pulley	
129	1001260432	1	Pulley	
130	1001261045	4	Capscrew M10 x 45 Class 10.9	
131	1001261085	4	Capscrew M10 x 85 Class 10.9	
132	1001276646	1	Harness, Engine (Not Shown - See Separate Breakdown in ELECTRICAL Section)	
133	1001277593	1	Engine, Deutz TCD2.9L4 (Stage V) (See Separate Breakdown in ELECTRICAL Section)	
134	0641510	2	Bolt 5/16 x 1-1/4	
135	0641612	4	Bolt 3/8 x 1-1/2	

FIGURE 3-77. DEUTZ TCD2.9L4 (STAGE V) ENGINE COMPONENTS

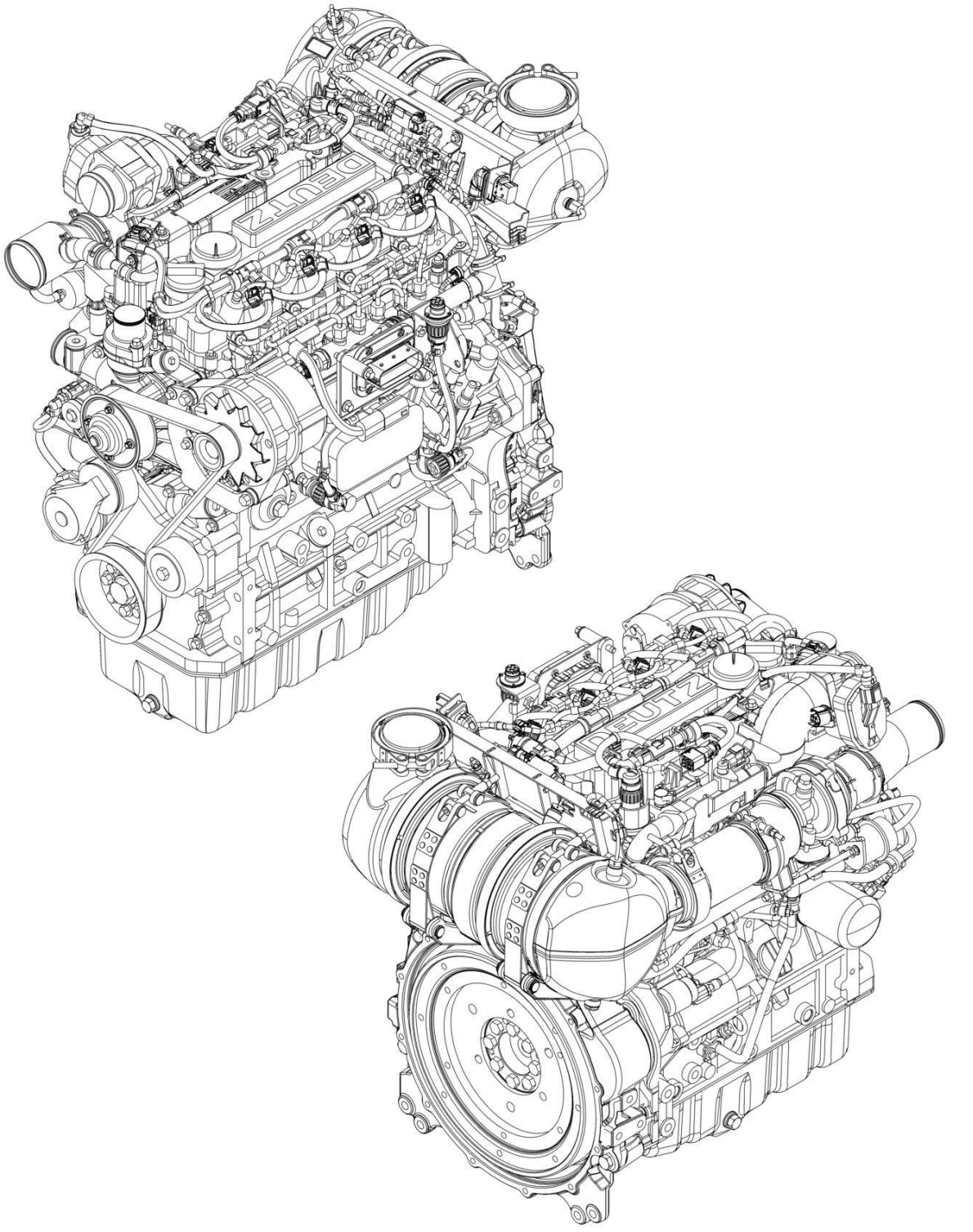

FIGURE 3-77. DEUTZ TCD2.9L4 (STAGE V) ENGINE COMPONENTS

ITEM	PART NUMBER	QTY	DESCRIPTION	REV
	1001277593	Ref	DEUTZ TCD2.9L4 (STAGE V) ENGINE	A
	See Note	Ref	Note: No Service Parts Availabe At Time of Printing	

FIGURE 3-78. DEUTZ TCD2.9L4 (CHINA IV) ENGINE INSTALLATION - WITH SAUER PUMPS

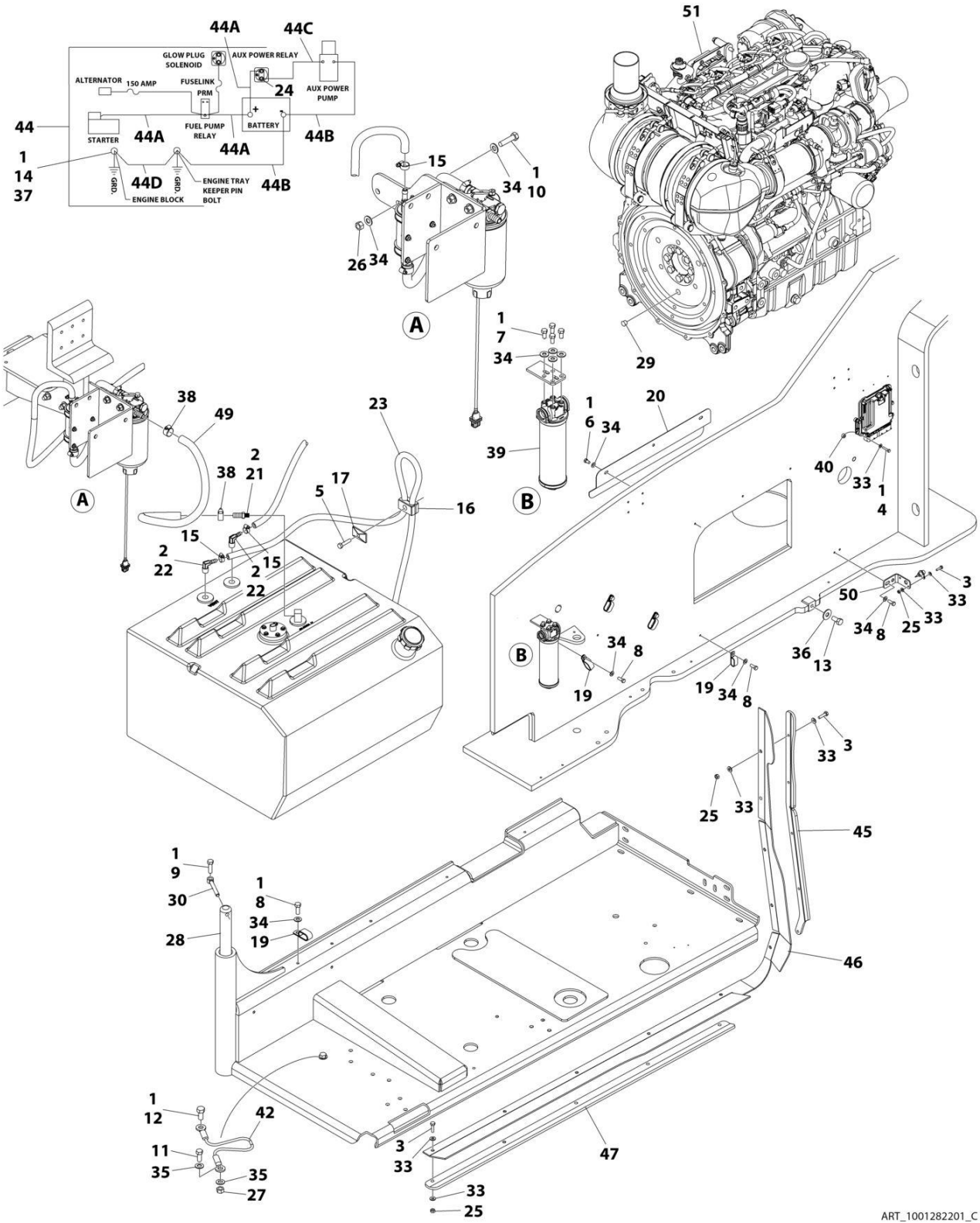

FIGURE 3-78. DEUTZ TCD2.9L4 (CHINA IV) ENGINE INSTALLATION - WITH SAUER PUMPS

ITEM	PART NUMBER	QTY	DESCRIPTION	REV
	1001282201	Ref	ENGINE INSTALLATION - DEUTZ TCD2.9L4 (CHINA IV)	C
1	0100011	AR	Compound, Locking	
2	0100079	AR	Sealant, Pipe	
3	0641408	11	Bolt 1/4 x 1	
4	0641410	4	Bolt 1/4 x 1-1/4	
5	0641511	1	Bolt 5/16 x 1-3/8	
6	0641605	3	Bolt 3/8 x 5/8	
7	0641606	4	Bolt 3/8 x 3/4	
8	0641608	7	Bolt 3/8 x 1	
9	0641610	1	Bolt 3/8 x 1-1/4	
10	0641612	2	Bolt 3/8 x 1-1/2	
11	0641708	1	Bolt 7/16 x 1	
12	0641808	1	Bolt 1/2 x 1	
13	0642010	1	Bolt 5/8 x 1-1/4	
14	0761210	1	Bolt M12 x 20	
15	1320022	3	Clamp	
16	1320187	1	Clamp	
17	1320190	1	Cover, Clamp	
19	1321716	5	Clamp	
20	1671121	1	Cover	
21	2180832	1	Fitting, Barbed	
22	2220313	2	Fitting, Elbow Barbed	
23	2750532	5 ft /1.5 m	Hose	
24	3300220	2	Nut 5/16	
25	3311405	11	Nut 1/4	
26	3311605	2	Nut 3/8	
27	3311705	1	Nut 7/16	
28	3422446	1	Pin, Pivot	
29	3520054	1	Plug	
30	3841143	1	Pin, Keeper	
31	4240018	AR	Strap, Tie (Not Shown)	
32	4240099	AR	Tie-Strap (Not Shown)	
33	4711400	26	Washer 1/4	
34	4711600	18	Washer 3/8	
35	4711700	2	Washer 7/16	
36	4752000	1	Washer 5/8	
37	4812100	1	Washer M12	
38	8405006	2	Clamp	
39	1001108617	1	Filter	
40	1001110425	4	Spacer	
42	1001131542	1	Lanyard	
43	1001138491	1	Harness (Not Shown - See Separate Breakdown in ELECTRICAL Section)	
44	1001141225	1	Battery Cable Kit	E
44A	7027042	1	Cable, Battery (Red) (Battery + to Relays and Starter)	
44B	7027043	1	Cable, Battery (Black) (Battery - to Tray Pivot Grd and Aux Pump)	
44C	7027044	1	Cable (Red) (Aux Relay to Aux Pump)	
44D	7027045	1	Cable, (Black) (Engine to Tray Pivot Grd)	
45	1001145089	1	Clamp	

SECTION 3 - ENGINE

ITEM	PART NUMBER	QTY	DESCRIPTION	REV
46	1001145560	1	Panel, Rubber	
47	1001145842	1	Plate, Clamping	
48	1001146588	1	Strap (Not Shown)	
49	1001154405	2 ft /0.7 m	Hose	
50	1001256879	1	Bracket	
51	1001282199	1	Engine Sub-Assembly (See Separate Breakdown in this Section)	
52	4460234	AR	Mount, Tie-Strap (Not Shown)	

FIGURE 3-79. DEUTZ TCD2.9L4 (CHINA IV) ENGINE INSTALLATION - WITH PMP PUMPS

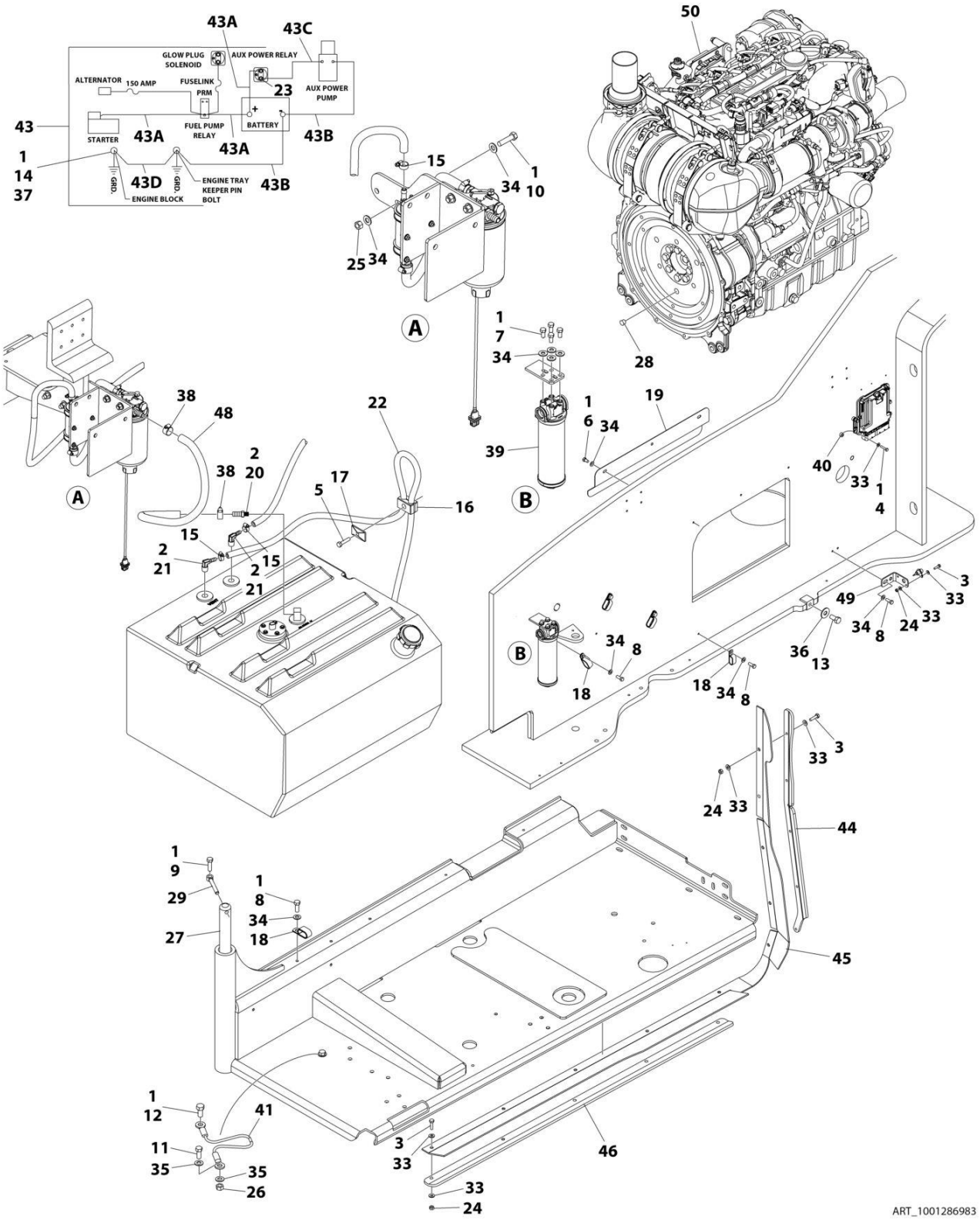

FIGURE 3-79. DEUTZ TCD2.9L4 (CHINA IV) ENGINE INSTALLATION - WITH PMP PUMPS

ITEM	PART NUMBER	QTY	DESCRIPTION	REV
	1001286983	Ref	DEUTZ TCD2.9L4 (CHINA IV) ENGINE INSTALLATION - WITH PMP PUMPS	A
1	0100011	AR	Compound, Locking	
2	0100079	AR	Sealant, Pipe	
3	0641408	11	Bolt 1/4 x 1	
4	0641410	4	Bolt 1/4 x 1-1/4	
5	0641511	1	Bolt 5/16 x 1-3/8	
6	0641605	3	Bolt 3/8 x 5/8	
7	0641606	4	Bolt 3/8 x 3/4	
8	0641608	7	Bolt 3/8 x 1	
9	0641610	1	Bolt 3/8 x 1-1/4	
10	0641612	2	Bolt 3/8 x 1-1/2	
11	0641708	1	Bolt 7/16 x 1	
12	0641808	1	Bolt 1/2 x 1	
13	0642010	1	Bolt 5/8 x 1-1/4	
14	0761210	1	Bolt M12 x 20	
15	1320022	3	Clamp	
16	1320187	1	Clamp	
17	1320190	1	Clamp	
18	1321716	5	Clamp	
19	1671121	1	Cover	
20	2180832	1	Fitting, Barbed	
21	2220313	2	Fitting, 90 NPTF/Barbed	
22	2750532	5 ft /1.5 m	Hose	
23	3300220	2	Nut 5/16	
24	3311405	11	Nut 1/4	
25	3311605	2	Nut 3/8	
26	3311705	1	Nut 7/16	
27	3422446	1	Pin	
28	3520054	1	Plug	
29	3841143	1	Pin, Keeper	
30	4240018	AR	Tie-Strap (Not Shown)	
31	4240099	AR	Tie-Strap (Not Shown)	
32	4460234	AR	Mount, Tie-Strap (Not Shown)	
33	4711400	26	Washer 1/4	
34	4711600	18	Washer 3/8	
35	4711700	2	Washer 7/16	
36	4752000	1	Washer 5/8	
37	4812100	1	Washer M12	
38	8405006	2	Clamp	
39	1001108617	1	Filter	
40	1001110425	4	Spacer	
41	1001131542	1	Lanyard	
42	1001138491	1	Harness (Not Shown - See Separate Breakdown in ELECTRICAL Section)	
43	1001141225	1	Battery Cable Kit	
43A	7027042	1	Cable, Battery (Red) (Battery + to Relays and Starter)	
43B	7027043	1	Cable, Battery (Black) (Battery - to Tray Pivot Grd and Aux Pump)	
43C	7027044	1	Cable (Red) (Aux Relay to Aux Pump)	

SECTION 3 - ENGINE

ITEM	PART NUMBER	QTY	DESCRIPTION	REV
43D	7027045	1	Cable, (Black) (Engine to Tray Pivot Grd)	
44	1001145089	1	Clamp	
45	1001145560	1	Panel	
46	1001145842	1	Plate	
47	1001146588	1	Strap (Not Shown)	
48	1001154405	2 ft /0.7 m	Hose	
49	1001256879	1	Bracket	
50	1001286984	1	Engine Sub-Assembly (See Separate Breakdown in this Section)	

FIGURE 3-80. DEUTZ TCD2.9L4 (CHINA IV) SUB - ASSEMBLY - WITH SAUER PUMPS

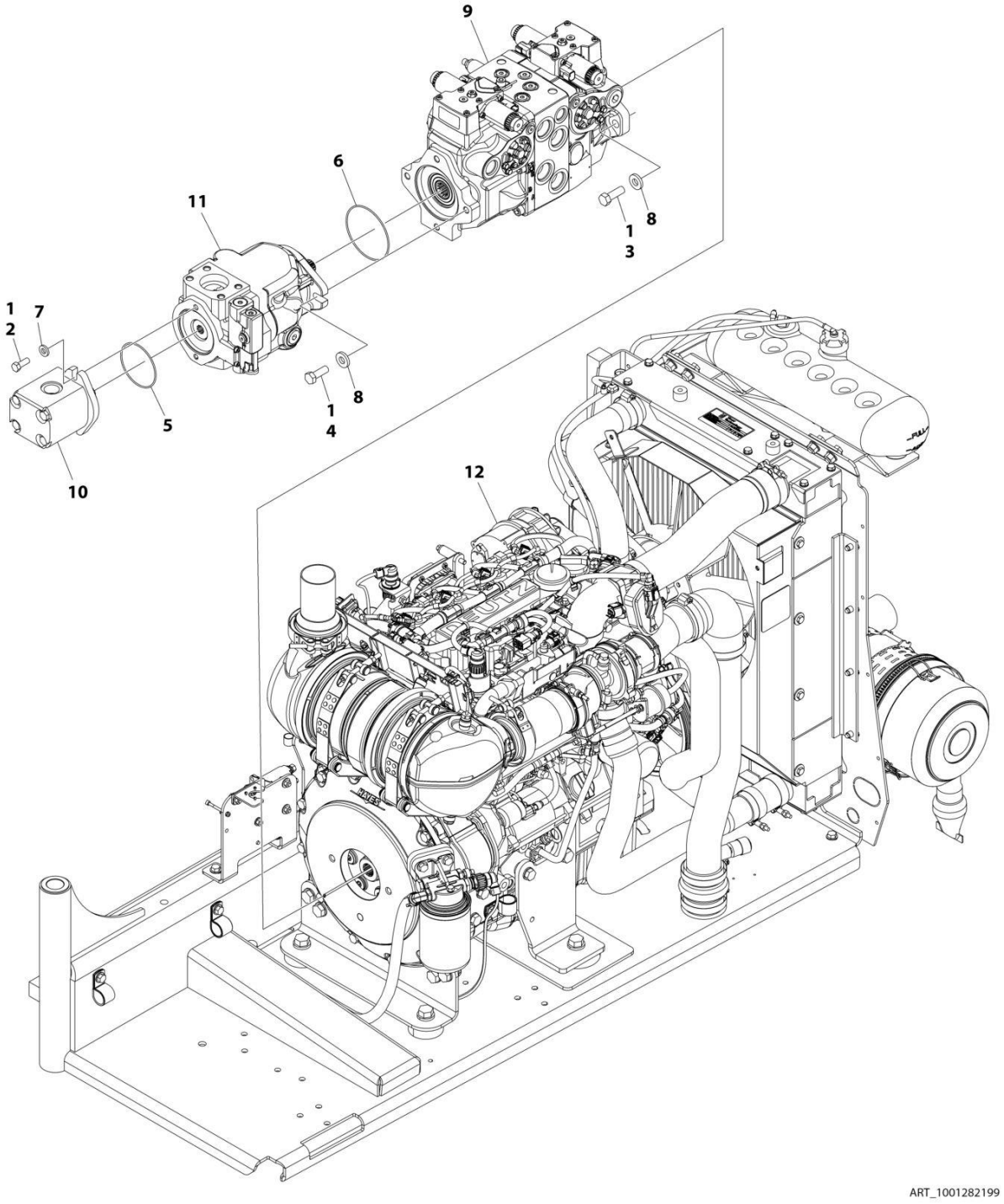

FIGURE 3-80. DEUTZ TCD2.9L4 (CHINA IV) SUB - ASSEMBLY - WITH SAUER PUMPS

ITEM	PART NUMBER	QTY	DESCRIPTION	REV
	1001282199	Ref	SUB-ASSEMBLY - DEUTZ TCD2.9L4 (CHINA IV)	G
1	0100011	AR	Compound, Locking	
2	0641608	2	Bolt 3/8 x 1	
3	0641814	2	Bolt 1/2 x 1-3/4	
4	0761215	2	Bolt M12 x 35	
5	3790152	1	O-Ring	
6	3790155	1	O-Ring	
7	4891600	2	Washer 3/8	
8	4891800	4	Washer 1/2	
9	1001108616	1	Pump Assembly - Tandem (See Separate Breakdown in this Section)	
10	1001112927	1	Pump Assembly - Gear (See Separate Breakdown in this Section)	
11	1001171095	1	Pump Assembly - Piston (See Separate Breakdown in this Section)	
12	1001282200	1	Engine Assembly (See Separate Breakdown in this Section)	

FIGURE 3-81. DEUTZ TCD2.9L4 (CHINA IV) ENGINE AND PUMP SUB-ASSEMBLY (WITH PMP PUMPS)

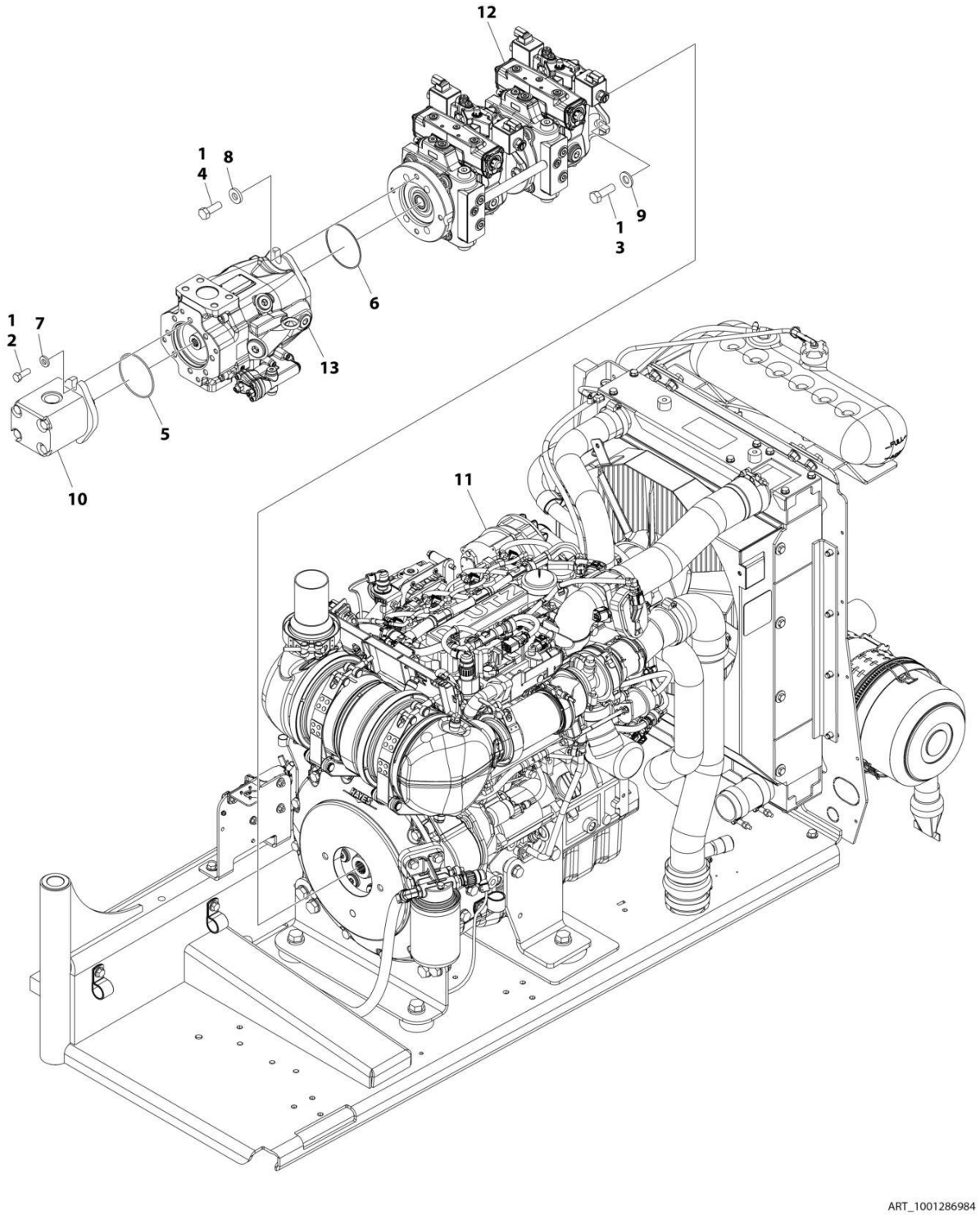

FIGURE 3-81. DEUTZ TCD2.9L4 (CHINA IV) ENGINE AND PUMP SUB-ASSEMBLY (WITH PMP PUMPS)

ITEM	PART NUMBER	QTY	DESCRIPTION	REV
	1001286984	Ref	DEUTZ TCD2.9L4 (CHINA IV) ENGINE AND PUMP SUB-ASSEMBLY (WITH PMP PUMPS)	A
1	0100011	AR	Compound, Locking	
2	0641608	2	Bolt 3/8 x 1	
3	0641812	2	Bolt 1/2 x 1-1/2	
4	0761215	2	Bolt M12 x 35	
5	3790152	1	O-Ring	
6	3790155	1	O-Ring	
7	4891600	2	Washer 3/8	
8	4891800	2	Washer 1/2	
9	8310056	2	Washer	
10	1001112927	1	Pump Assembly - Gear (See Separate Breakdown in this Section)	
11	1001282200	1	Engine Assembly (See Separate Breakdown in this Section)	
12	1001286957	1	Pump Assembly - Tandem (See Separate Breakdown in this Section)	
13	1001286958	1	Pump Assembly - Piston (See Separate Breakdown in this Section)	

FIGURE 3-82. ENGINE ASSEMBLY - DEUTZ TCD2.9L4 (CHINA IV)

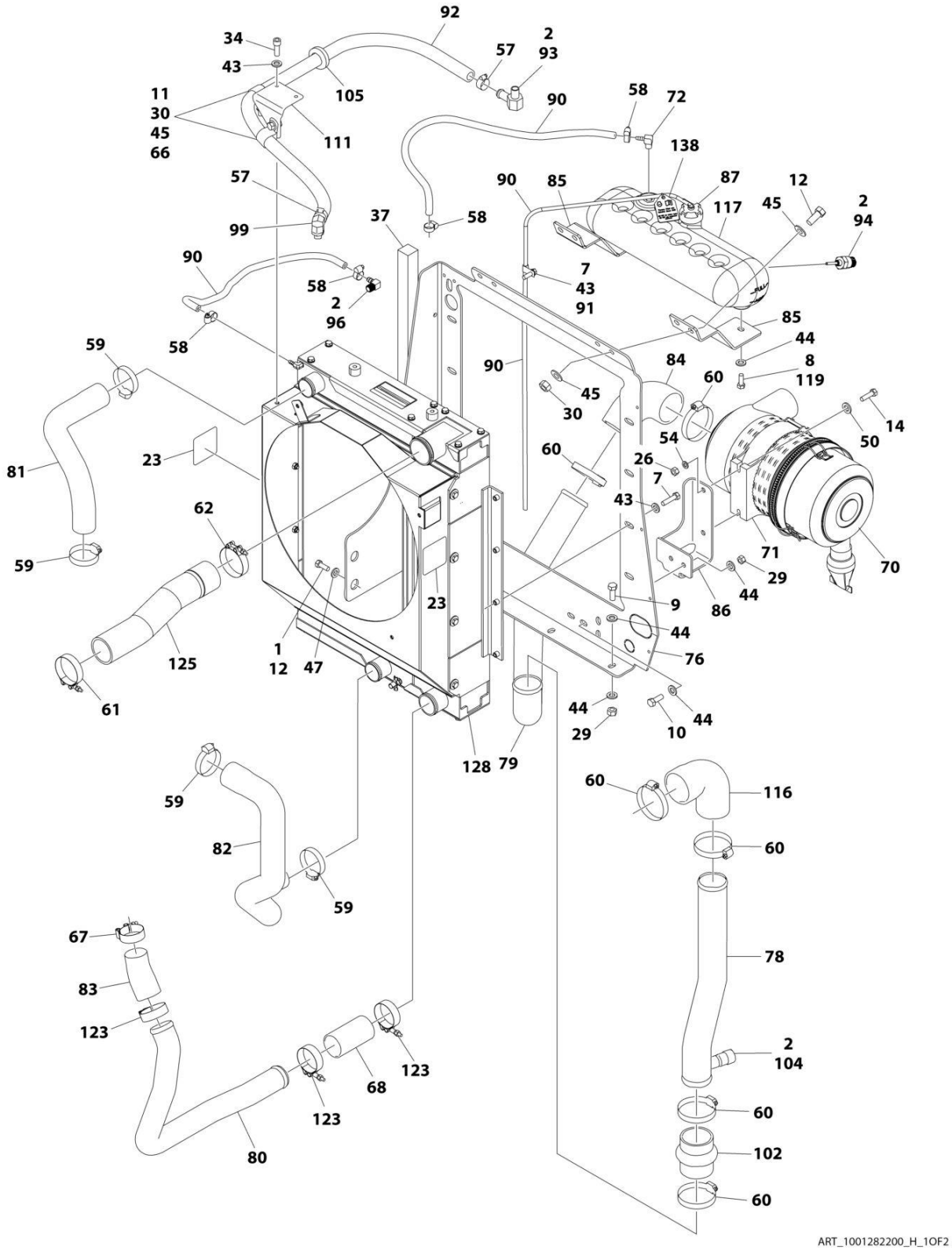

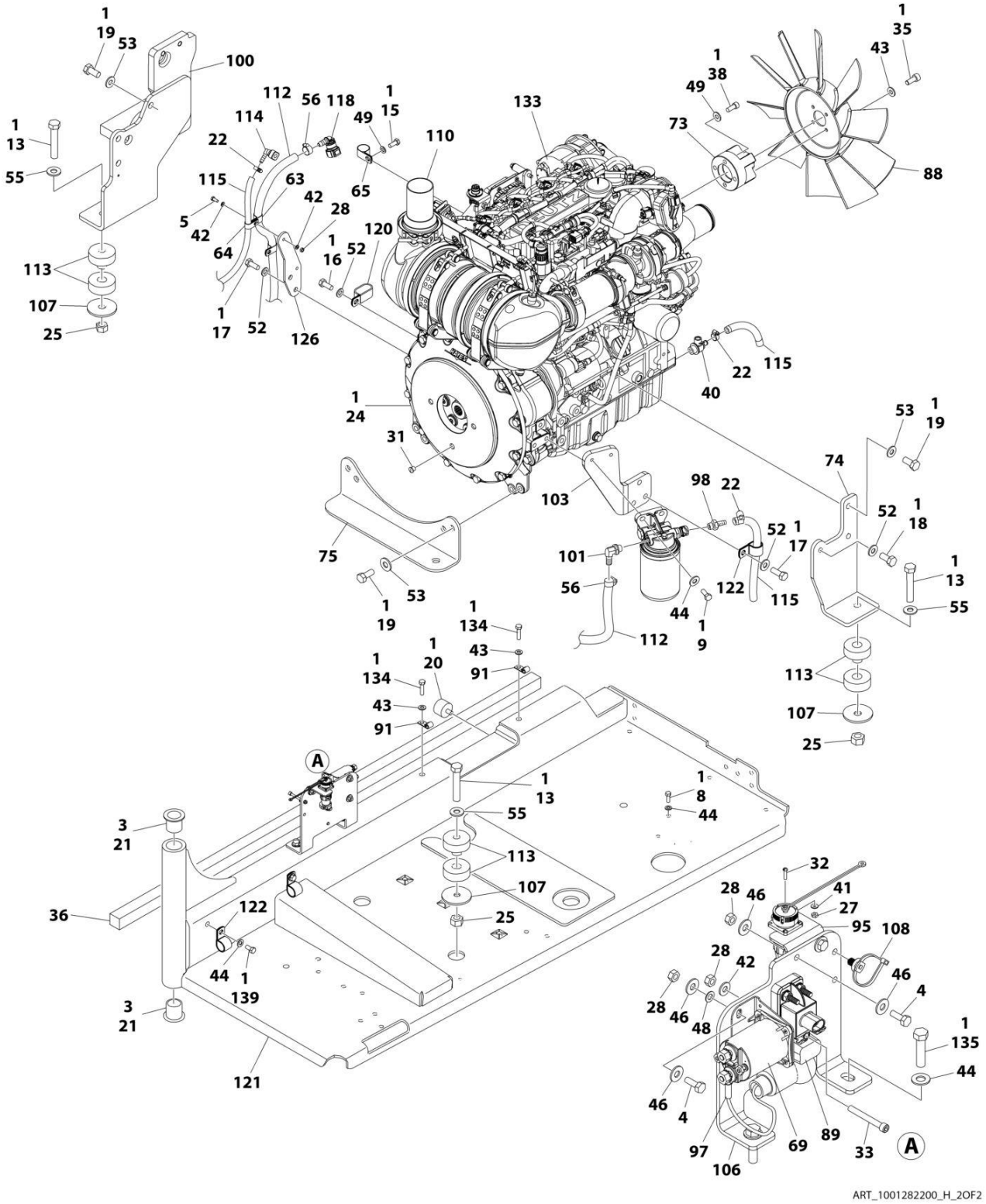
ART_1001282200_H_2OF2

FIGURE 3-82. ENGINE ASSEMBLY - DEUTZ TCD2.9L4 (CHINA IV)

ITEM	PART NUMBER	QTY	DESCRIPTION	REV
	1001282200	Ref	ENGINE ASSEMBLY - DEUTZ TCD2.9L4 (CHINA IV)	H
1	0100011	AR	Compound, Locking	
2	0100020	AR	Compound, Locking	
3	0100062	AR	Compound, Locking	
4	0641406	4	Bolt 1/4 x 3/4	
5	0641407	2	Bolt 1/4 x 7/8	
6	0641503	1	Bolt 5/16 x 3/8	
7	0641508	8	Bolt 5/16 x 1-1/4	
8	0641606	3	Bolt 3/8 x 3/4	
9	0641608	9	Bolt 3/8 x 1	
10	0641610	2	Bolt 3/8 x 1-1/4	
11	0641706	2	Bolt 7/16 x 3/4	
12	0641708	6	Bolt 7/16 x 1	
13	0682028	4	Bolt 5/8 x 3-1/2 Grade 8	
14	0700815	2	Bolt M8 x 35	
15	0760808	1	Bolt M8 x 16	
16	0761212	1	Bolt M12 x 25	
17	0761214	5	Bolt M12 x 30	
18	0771212	1	Bolt M12 x 25 Class 10.9	
19	0771414	9	Bolt M14 x 30 Class 10.9	
20	0940070	1	Bumper	
21	0961986	2	Bushing, Flanged	
22	1320022	3	Clamp	
23	1703162	2	Decal - Fan	
24	2902065	1	Pump Coupling Kit (See Separate Breakdown in this Section)	
25	3272001	4	Nut 5/8 Grade 8	
26	3290801	2	Nut M8	
27	3310401	3	Nut #4	
28	3311405	7	Nut 1/4	
29	3311605	9	Nut 3/8	
30	3311705	5	Nut 7/16	
31	3520054	1	Plug, Hole	
32	3910408	3	Screw #4 x 1/2	
33	3931432	1	Capscrew 1/4 x 2	
34	3931508	2	Capscrew 5/16 x 1/2	
35	4031908	4	Capscrew M8 x 20	
36	3960543	1	Seal	
37	3960544	1	Seal	
38	4031912	4	Bolt M8 x 40	
39	4240099	AR	Tie-Strap (Not Shown)	
40	4640751	1	Valve, Oil Drain	
41	4710400	3	Washer #4	
42	4711400	5	Washer 1/4	
43	4711500	17	Washer 5/16	
44	4711600	27	Washer 3/8	
45	4711700	10	Washer 7/16	
46	4751400	8	Washer 1/4	
47	4751700	2	Washer 7/16	
48	4791400	2	Starwasher 1/4	
49	4811900	5	Washer M8	

ITEM	PART NUMBER	QTY	DESCRIPTION	REV
50	4811902	2	Washer M8	
52	4812100	7	Washer M12	
53	4812200	9	Washer M14	
54	4831900	2	Washer M8	
55	4892000	4	Washer 5/8	
56	8405006	2	Clamp	
57	8405007	2	Clamp	
58	8405009	4	Clamp	
59	8405201	4	Clamp	
60	8405204	6	Clamp	
61	8405212	1	Clamp	
62	8405213	1	Clamp	
63	8406102	2	Clip	
64	8406112	1	Clip	
65	8406201	1	Clip	
66	8406302	2	Clamp	
67	8410014	1	Clamp	
68	91563070	1	Coupling, Rubber	
69	1001117308	1	Relay	
70	1001133633	1	Air Cleaner Assembly	
70	70024190	1	Element, Air Filter	
71	1001133634	1	Clamp	
72	1001134488	1	Fitting, 90 Barbed	
73	1001289964	1	Spacer, Fan	
74	1001135560	1	Support, Engine	
75	1001135562	1	Support, Engine - Rear	
76	1001135680	1	Support, Radiator	
77	1001135779	1	Cable, Alternator Positive (Not Shown)	
78	1001135901	1	Pipe, Air Intake	
79	1001135903	1	Pipe, Air Intake	
80	1001135913	1	Pipe, Turbo to Air Cleaner	
81	1001135924	1	Hose, Radiator (Upper)	
82	1001135926	1	Pipe, Radiator (Lower)	
83	1001135943	1	Coupling, Rubber	
84	1001135946	1	Elbow, Rubber	
85	1001136626	2	Bracket	
86	1001136665	1	Bracket	
87	1001136834	1	Cap, Tank	
88	1001137276	1	Fan	
89	1001138228	1	Module, Power	
89	70023592	1	Fuse 20Amp (Switched Output)	
89	70023593	1	Fuse 30Amp (Battery Output)	
90	1001138248	9 ft /3 m	Tubing	
91	1001138253	5	Clamp	
92	1001138524	1	Hose	
93	1001138559	1	Fitting, 90	
94	1001138827	1	Sensor, Coolant Level	
95	1001139240	1	Bracket	
96	1001140564	1	Fitting, 90 Barbed	
97	1001141304	1	Wire, Glow Plug	
98	1001141717	1	Fitting, Straight	

SECTION 3 - ENGINE

ITEM	PART NUMBER	QTY	DESCRIPTION	REV
99	1001141719	1	Fitting, 90 Barbed	
100	1001283008	1	Support, Engine	
101	1001142501	1	Fitting, 90 Barbed	
102	1001142637	1	Hose, Hump	
103	1001142685	1	Bracket	
104	1001143390	1	Indicator, Air Filter Service	
105	1001144089	1	Grommet	
106	1001145154	1	Plate, Mounting	
107	1001146219	4	Washer Special	
108	1001146588	1	Strap	
109	1001148843	1	Harness, Fuel Filter (Not Shown - See Separate Breakdown in ELECTRICAL Section)	
110	1001153024	1	Pipe, Exhaust	
111	1001153387	1	Plate	
112	1001154405	5 ft /2 m	Hose	
113	1001155575	4	Mount, Motor	
114	1001155823	1	Coupling	
115	1001165035	31 ft /10 m	Hose	
116	1001165820	1	Pipe, Elbow	
117	1001166393	1	Tank, Surge	
118	1001170982	1	Adapter	
119	1001180620	AR	Adhesive	
120	1001181899	1	Clamp	
121	1001191272	1	Tray	
122	1001191620	3	Clamp	
123	1001208299	3	Clamp	
124	1001227606	1	Bracket	
125	1001233492	1	Hose	
126	1001235952	1	Bracket	
127	1001276646	1	Harness, Engine (Not Shown - See Separate Breakdown in ELECTRICAL Section)	
128	1001256864	1	Radiator	
133	1001292604	1	Deutz TCD2.9L4 (CHINA IV) Engine Components (See Separate Breakdown in this Section)	
134	0641510	2	Bolt 5/16 x 1-1/4	
135	0641612	2	Bolt 3/8 x 1-1/2	
137	4240032	AR	Tie-Strap (Not Shown)	
138	1001291401	1	Tag, Coolant	
139	0641611	2	Bolt 3/8 x 1-3/8	

FIGURE 3-83. DEUTZ TCD2.9L4 (CHINA IV) ENGINE COMPONENTS

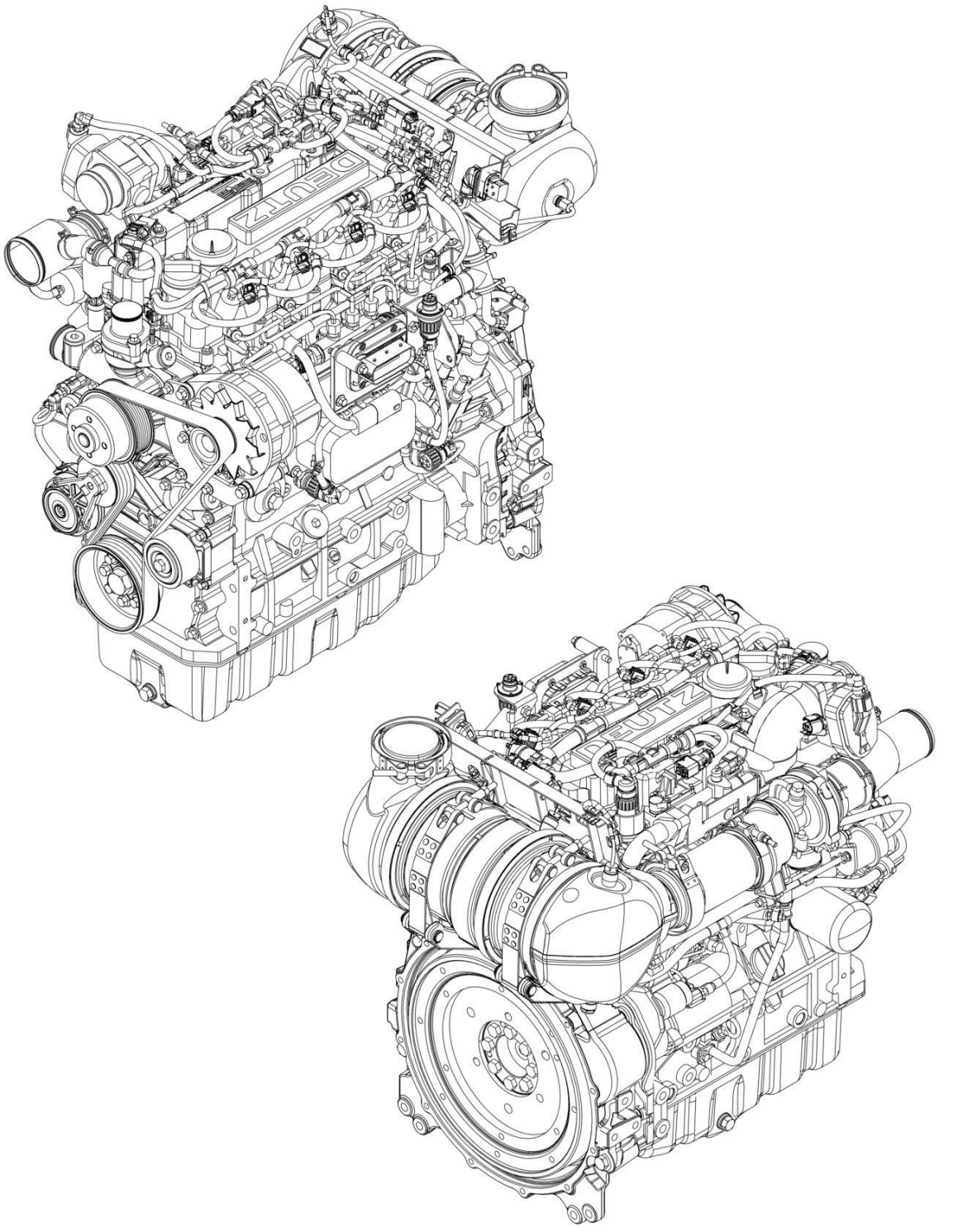

FIGURE 3-83. DEUTZ TCD2.9L4 (CHINA IV) ENGINE COMPONENTS

ITEM	PART NUMBER	QTY	DESCRIPTION	REV
	1001292604	Ref	DEUTZ TCD2.9L4 (CHINA IV) ENGINE	A
	See Note	Ref	Note: Additional components may be available. Contact JLG Customer Service for more details.	
		Ref	**AIR INTAKE COMPONENTS**	
	70008604	1	Pipe, Air Intake (Includes Clips)	
	70008608	1	Adapter, Air Intake Pipe	
	70008537	1	Valve, Throttle (Includes Gasket)	
	70008432	1	Manifold, Air Charge	
		Ref	**COOLING SYSTEM COMPONENTS**	
	1001291868	1	Pump, Coolant (Includes Gasket & Seal)	
	70031055	1	O-Ring, Coolant Pump	
	70007325	1	Gasket	
	70007603	1	Thermostat	
	70005184	1	O-Ring (Between Thermostat & Cover)	
	70005931	1	Gasket (Between Thermostat Cover & Pump)	
	70025142	1	Cover, Thermostat	
		Ref	**ELECTRICAL SYSTEM COMPONENTS**	
	70024513	1	Sensor, Primary Fuel Filter	
	70031144	1	Starter	
	70031142	1	Generator/Alternator (Includes Regulator)	
	70031143	1	Regulator, Voltage	
	70008558	1	Harness, Engine	
	1001211556	1	SENSOR,AIR AMBIENT	
	70028540	1	Sender, Temperature (Cylinder Head)	
	70024504	1	Sensor, Pressure (at Secondary Fuel Filter & Engine Block)	
	70026210	2	Sensor, Speed (End of Block & Front Cover)	
	70029407	1	Sensor, Pressure (Air Intake Manifold) (Round)	
	70024507	1	Sensor, Pressure (Air Intake Manifold) (Rectangular)	
	70000345	4	Plug, Glow	
		Ref	**EXHAUST SYSTEM COMPONENTS**	
	70025164	1	Gasket, Exhaust Manifold to Head	
	70025130	8	Bolt (Holds Exhaust Manifold to Head)	
	70029557	1	Gasket, Exhaust (Between Exhaust Manifold & First Exhaust Pipe)	
	70007354	1	Gasket, Exhaust (Between First Exhaust Pipe and beyond)	
	70031138	1	Valve, EGR	
	70007326	1	Gasket (Between EGR Valve & EGR Module)	
	70007328	1	Turbocharger	
	70004504	1	Compensator	
	70030097	1	Clamp, Exhaust (Compensator Front)	
	70030099	2	Clamp, Exhaust (Compensator to Muffler)	
	70025242	1	Gasket (Compensator)	
	70008564	1	Catalyst	
	70029517	2	Clamp (Catalyst)	
	70029520	2	Gasket (Catalyst)	
	70024505	1	Sender, Temperature (Catalyst Inlet)	
	70029409	1	Sender, Temperature (Catalyst Outlet)	
	70008431	1	Sensor, Pressure (Catalyst)	
		Ref	**FUEL SYSTEM COMPONENTS**	
	1001225430	1	Element, Fuel Filter (Primary)	

SECTION 3 - ENGINE

ITEM	PART NUMBER	QTY	DESCRIPTION	REV
	1001225432	1	Element, Fuel Filter (Secondary)	
	70030381	1	Pump, High Pressure (Includes Mounitng O-Ring, Overflow Valve & Volume Control Valve)	
	70025152	1	O-Ring (Between Pump AND Spacer)	
	70004505	1	Valve, Overflow	
	70004508	1	Valve, Volume Control	
	70008607	4	Injector, Fuel (Includes O-Ring, Clamp & Sealing Washer)	
	70008422	1	Pump, Fuel Supply (Includes Clamps)	
	70025144	2	Clamp	
		Ref	**GASKETS & SEAL & KITS (Note: Some components listed with main component)**	
	70005938	1	Gasket Kit	
	70024906	1	Gasket, Head	
	70005171	1	Gasket, Valve Cover	
	70002718	1	Seal, Rear Case	
	70004280	1	Seal, Front Case	
	70028185	1	Gasket, Front Cover	
	70005176	1	O-Ring (Between Air Intake Manifold & Mixing Tube)	
	70005177	1	Gasket (Between Air Intake Manifold & Head)	
		Ref	**LUBRICATION SYSTEM COMPONENTS**	
	7016331	1	Filter, Oil	
	70024904	1	Dipstick (Includes O-Ring	
	70024905	1	O-Rng	
	7020465	1	Cap, Filler	
	70005941	2	Plug, Oil Pan	
	70005942	2	Seal, Oil Pan Plug	
	70005172	1	Pump, Oil Lube (Includes O-Ring & Gasket)	
	70025135	1	O-Ring	
	70005173	1	Gasket	
	70031474	1	Cooler, Oil	
	70031388	1	Seal, Oil Cooler	
		Ref	**MECHANICAL COMPONENTS**	
	70001870	1	Flywheel (Includes Ring Gear)	
	7024579	1	Gear, Ring	
	70030359	1	Belt Tensioner	
	70004277	1	Belt, Drive	
	70027432	1	Idler, Drive Belt	

FIGURE 3-84. PUMP ASSEMBLY (REXROTH) (DEUTZ TD2011 ENGINES)

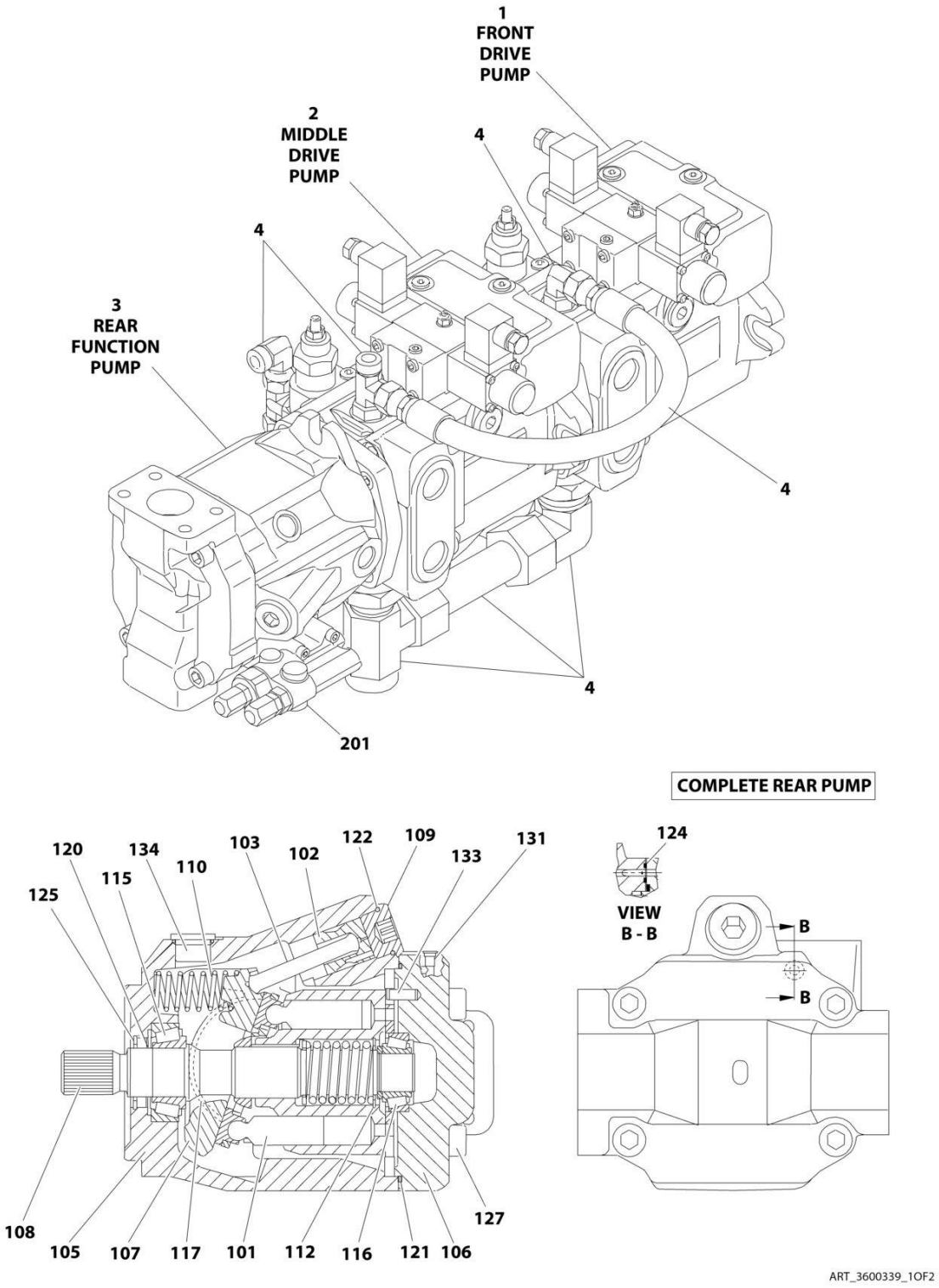

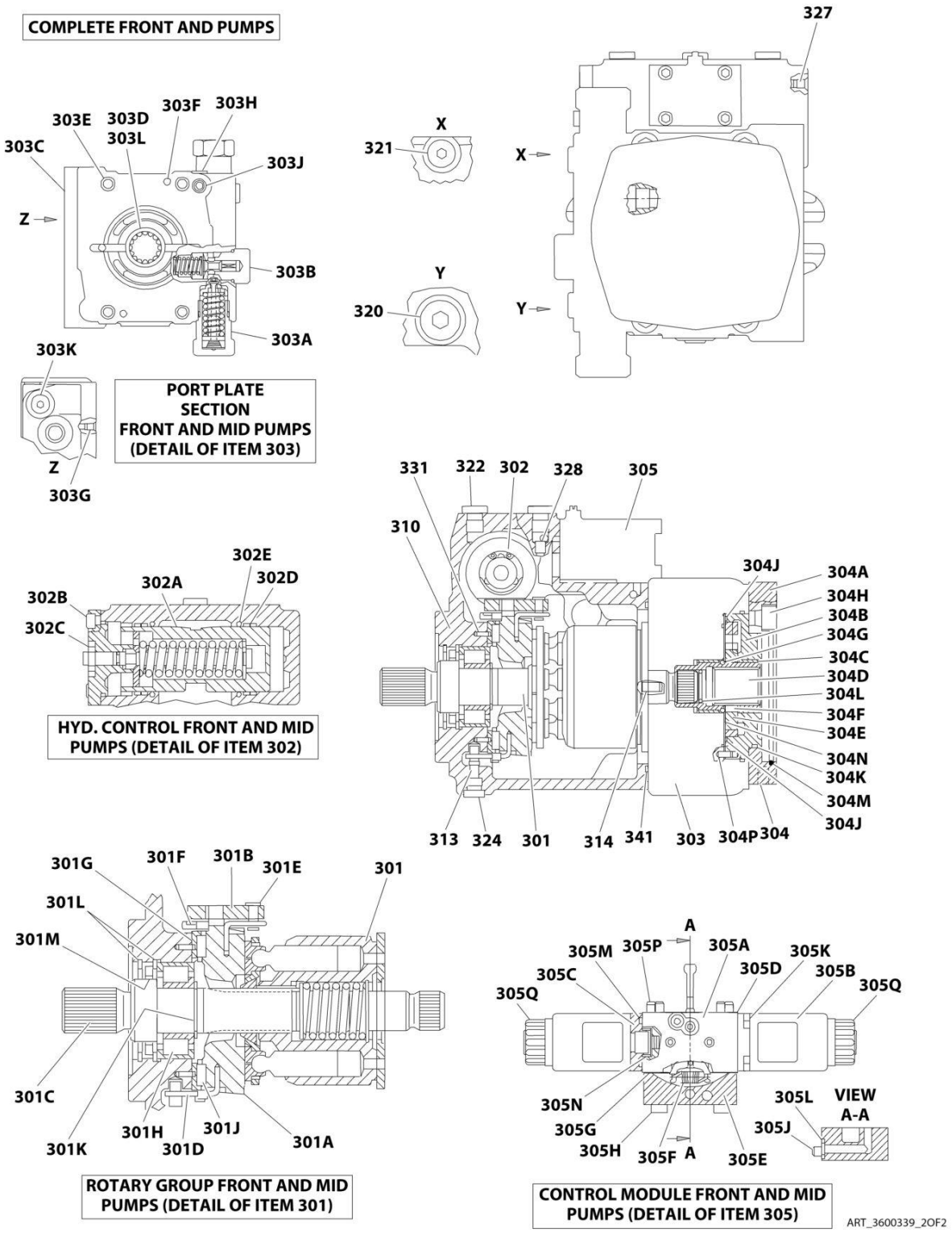
COMPLETE FRONT AND PUMPS
303E
303D
303L
303F
303H
303C
303J
Z
303B
303A
303K
Z
303G
PORT PLATE SECTION FRONT AND MID PUMPS (DETAIL OF ITEM 303)
X
321
Y
320
327
X
Y
331
322
302
328
305
310
304J
304A
304H
304B
304G
304C
304D
304L
304F
304E
304N
304K
304M
304J
313
324
301
314
341
303
304P
304
302E
302D
302A
302B
302C
HYD. CONTROL FRONT AND MID PUMPS (DETAIL OF ITEM 302)
301G
301F
301B
301E
301
301L
301M
301C
301K
301H
301D
301J
301A
ROTARY GROUP FRONT AND MID PUMPS (DETAIL OF ITEM 301)
A
305M
305P
305A
305K
305D
305B
305C
305Q
305Q
305N
305G
305H
305F
A
305E
305L
VIEW A-A
305J
CONTROL MODULE FRONT AND MID PUMPS (DETAIL OF ITEM 305)
ART_3600339_2OF2

FIGURE 3-84. PUMP ASSEMBLY (REXROTH) (DEUTZ TD2011 ENGINES)

ITEM	PART NUMBER	QTY	DESCRIPTION	REV
	3600339	Ref	PUMP ASSEMBLY (REXROTH) (DEUTZ TD2011 ENGINES)	D
1	7024042	1	Front Drive Pump Assembly (Includes Items 301-341)	
2	7024043	1	Middle Drive Pump Assembly (Includes Items 301-341)	
3	7024044	1	Rear Function Pump Assembly (Includes Items 101-201)	
4	70001952	1	Hydraulic Kit (Includes all Rexroth Supplied Hydraulic Fittings, Hoses and Tubes)	
	7024044	Ref	REAR FUNCTION PUMP ASSEMBLY	
101	7024914	1	Rotary Section	
102	See Note	1	Piston, Control (Note: Not Available - Purchase Complete Assembly)	
103	See Note	1	Rod, Piston (Note: Not Available - Purchase Complete Assembly)	
105	See Note	1	Housing, Pump (Note: Not Available - Purchase Complete Assembly)	
106	See Note	1	Plate, Port (Note: Not Available - Purchase Complete Assembly)	
107	7024915	1	Plate, Swash	
108	7024916	1	Driveshaft	
109	See Note	1	Plug (Note: Not Available for Purchase)	
110	See Note	1	Spring (Note: Not Available for Purchase)	
112	7012709	1	Shim	
115	7024038	1	Bearing, Roller	
116	7012706	1	Bearing, Roller	
117	7024917	2	Shell, Cradle	
120	7024918	1	Seal, Shaft	
121	7024919	1	O-Ring	
122	7024920	1	O-Ring	
124	7024921	1	Seal	
125	7012715	1	V-Ring	
127	See Note	4	Capscrew M12 x 45 Grade 10.9 (Note: Not Available for Purchase)	
131	See Note	1	Plug (Note: Not Available for Purchase)	
133	See Note	1	Pin, Dowel (Note: Not Available for Purchase)	
134	See Note	1	Plug (Note: Not Available for Purchase)	
201	7024913	Ref	Pilot Valve Assembly	
		Ref	Note: Two mounting designs of p/n 7024913 pilot valve exist. Early design uses qty. 3 O-rings. Late design uses qty 1 sealing plate. Seal designs cannot be interchanged. Verify seal design before ordering.	
201	7024922	3	O-Ring (Seals between Pilot Valve and Rear Pump)	
201	70021867	1	Plate, Sealing (Seals between Pilot Valve and Rear Pump)	
		Ref	FRONT DRIVE PUMP ASSEMBLIES	
	7024042	Ref	Front Drive Pump Assembly	
	7024043	Ref	Middle Drive Pump Assembly	
301	7024064	1	Rotary Group	
301A	See Note	NSS	Cradle (Note: Use Item 301)	
301B	See Note	NSS	Ring, Slide (Note: Use Item 301)	
301C	See Note	NSS	Driveshaft (Note: Use Item 301)	
301D	See Note	NSS	Wire (Note: Use Item 301)	
301E	See Note	NSS	Pin, Joint (Note: Use Item 301)	
301F	See Note	NSS	Wire (Note: Use Item 301)	
301G	See Note	NSS	Liner, Bearing (Note: Use Item 301)	
301H	See Note	NSS	Bearing, Roller (Note: Use Item 301)	
301J	See Note	NSS	Cradle Bearing Assembly (Note: Use Item 301)	

ITEM	PART NUMBER	QTY	DESCRIPTION	REV
301K	See Note	NSS	Ring, Retaining (Note: Use Item 301)	
301L	70001968	2	Ring, Retaining	
301M	7024070	1	Seal, Shaft Ring	
302	7024065	1	Control Group - Hydraulic	
302A	See Note	NSS	Piston, Positioning - Complete (Note: Use Item 302)	
302A	7024071	1	O-Ring, Outer Seal	
302A	7024072	1	O-Ring, Stem	
302B	See Note	4	Capscrew M6 x 12 (Note: Not Available - Purchase Locally)	
302C	See Note	NSS	Nut (Note: Use Item 302)	
302D	See Note	NSS	Ring, Guide (Note: Use Item 302)	
302E	See Note	NSS	Seal, O-Ring (Note: Use Item 302)	
303	7024911	1	Port Plate Group	
303A	7024073	2	Cartridge, Relief Valve (High Pressure)	
303A	7024075	1	O-Ring	
303A	7024076	1	Ring, Back-up	
303B		Ref	Cartridge Options:	
303B	7024097	1	Front Pump Cartridge (Lock Valve with Orifice) Note: Sold as an Assembly except Outer Seal.	
303B	7024075	1	O-Ring	
303B	7023881	1	Middle Pump Cartridge (Pressure Relief Valve) Note: Sold as an Assembly except Outer Seal.	
303B	7024077	1	O-Ring	
303C	See Note	NSS	Plate, Port (Note: Use Item 303)	
303D	See Note	NSS	Bushing, Bearing (Note: Use Item 303)	
303E	See Note	4	Capscrew M12 x 70 Grade10.9 (Note: Not Available - Purchase Locally)	
303F	See Note	NSS	Pin, Dowel (Note: Use Item 303)	
303G	See Note	NSS	Pin, Break-Off (Note: Use Item 303)	
303H	See Note	1	Screw, Locking M10 x 1 (Note: Not Available - Purchase Locally)	
303J	7024908	2	O-Ring	
303K	See Note	2	Screw, Locking 7/16 (Note: Not Available - Purchase Locally)	
303L	See Note	NSS	Bearing, Roller (Note: Use Item 303)	
304	7024906	1	Internal Gear Pump	
304A	See Note	NSS	Flange, Intermediate (Note: Use Item 304)	
304B	See Note	NSS	IZP-Housing (Note: Use Item 304)	
304C	See Note	NSS	Bushing, Bearing (Note: Use Item 304)	
304D	See Note	NSS	Coupling, Driveshaft Through (Note: Use Item 304)	
304E	See Note	NSS	Gear Set (Note: Use Item 304)	
304F	See Note	NSS	Key, Driveshaft (Note: Use Item 304)	
304G	See Note	NSS	Ring, Retaining (Note: Use Item 304)	
304H	See Note	4	Capscrew M10 x 20 (Note: Not Available - Purchase Locally)	
304J	7024080	2	Seal	
304K	7024081	1	O-Ring	
304L	See Note	NSS	Ring, Retaining (Note: Use Item 304)	
304M	See Note	NSS	O-Ring (Note: Use Item 304)	
304N	7024005	1	Plate, Wear	
304P	See Note	NSS	Pin, Cylinder (Note: Use Item 304)	
305	7024068	1	Control Module	
305A	7024084	1	Valve Body, Lever and Internal Components	
305B	7024083	2	Coil, Solenoid	
305C	See Note	NSS	Spacer, Coil (Note: Use Item 305)	

ITEM	PART NUMBER	QTY	DESCRIPTION	REV
305D	7024085	1	Gasket	
305E	See Note	NSS	Cover (Note: Use Item 305)	
305F	See Note	NSS	Spring, Draw (Note: Use Item 305)	
305G	See Note	NSS	Gasket (Note: Use Item 305)	
305H	See Note	4	Capscrew M6 x 65 (Note: Not Available - Purchase Locally)	
305J	See Note	1	Capscrew M6 x 45 (Note: Not Available - Purchase Locally)	
305K	See Note	8	Capscrew M5 x 10 (Note: Not Available - Purchase Locally)	
305L	7024087	1	O-Ring	
305M	7024088	2	O-Ring	
305N	7024089	2	Cup, Spring	
305P	See Note	NSS	Pin, Cylinder (Note: Use Item 305)	
305Q	70002569	2	Nut, Coil	
310	See Note	1	Housing (Note: Not Available for Purchase)	
313	See Note	2	Pin, Dowel (Note: Not Available for Purchase)	
314	See Note	1	Pin, Cylinder (Note: Not Available for Purchase)	
320	See Note	1	Screw 7/8 (Front Drive Pump Only) (Note: Not Available - Purchase Locally)	
321	See Note	1	Screw 9/16 (Note: Not Available - Purchase Locally)	
322	See Note	1	Screw 7/16 (Note: Not Available - Purchase Locally)	
324	See Note	1	Screw M10 x 1 (Note: Not Available - Purchase Locally)	
327	See Note	1	Pin, Double Break-Off (Note: Not Available for Purchase)	
328	7018936	2	Orifice	
331	See Note	2	Pin, Clamping (Note: Not Available for Purchase)	
341	7024069	1	O-Ring	

FIGURE 3-85. PUMP ASSEMBLY (REXROTH) (DEUTZ TCD2.9L4 ENGINES)

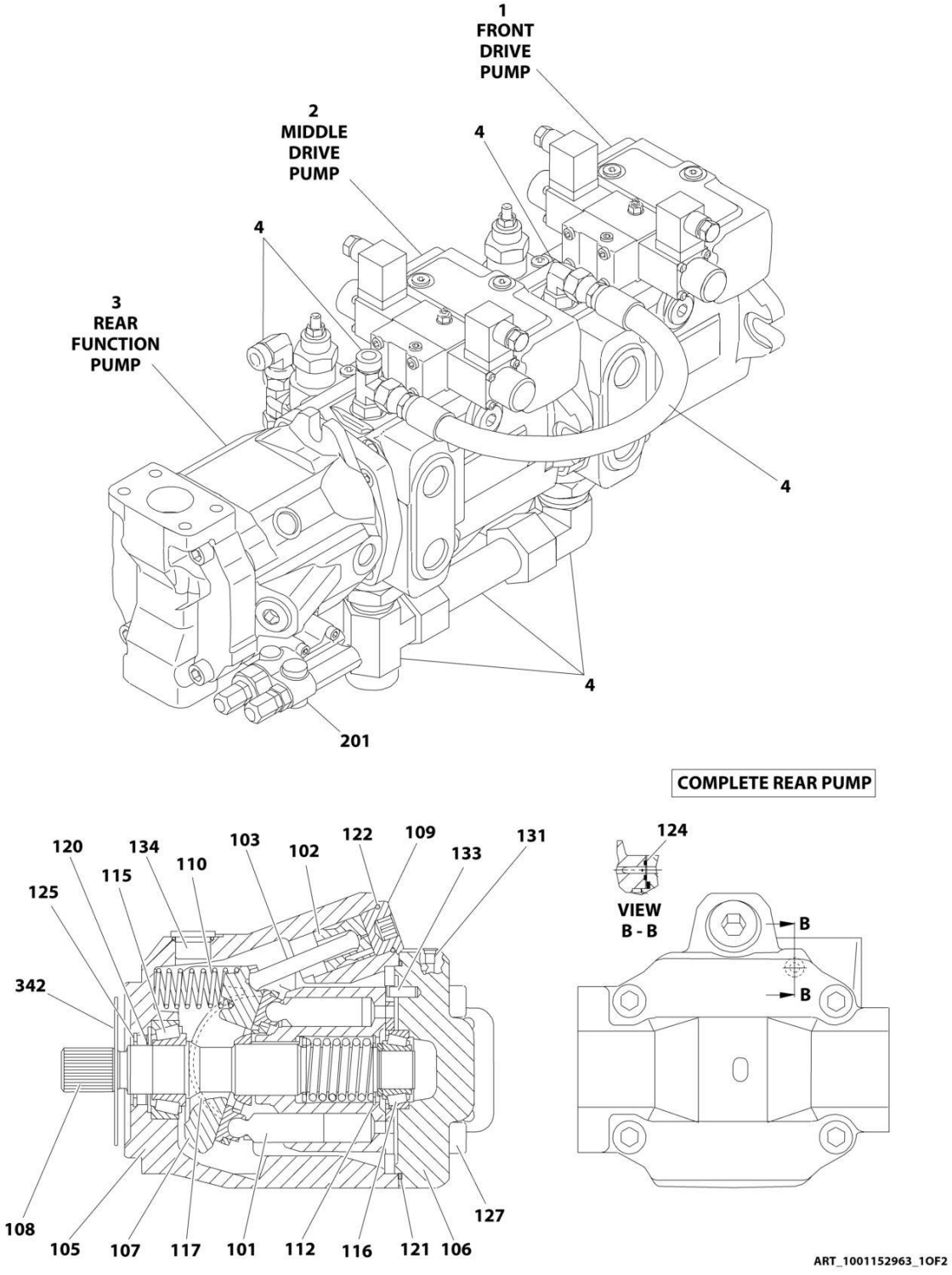

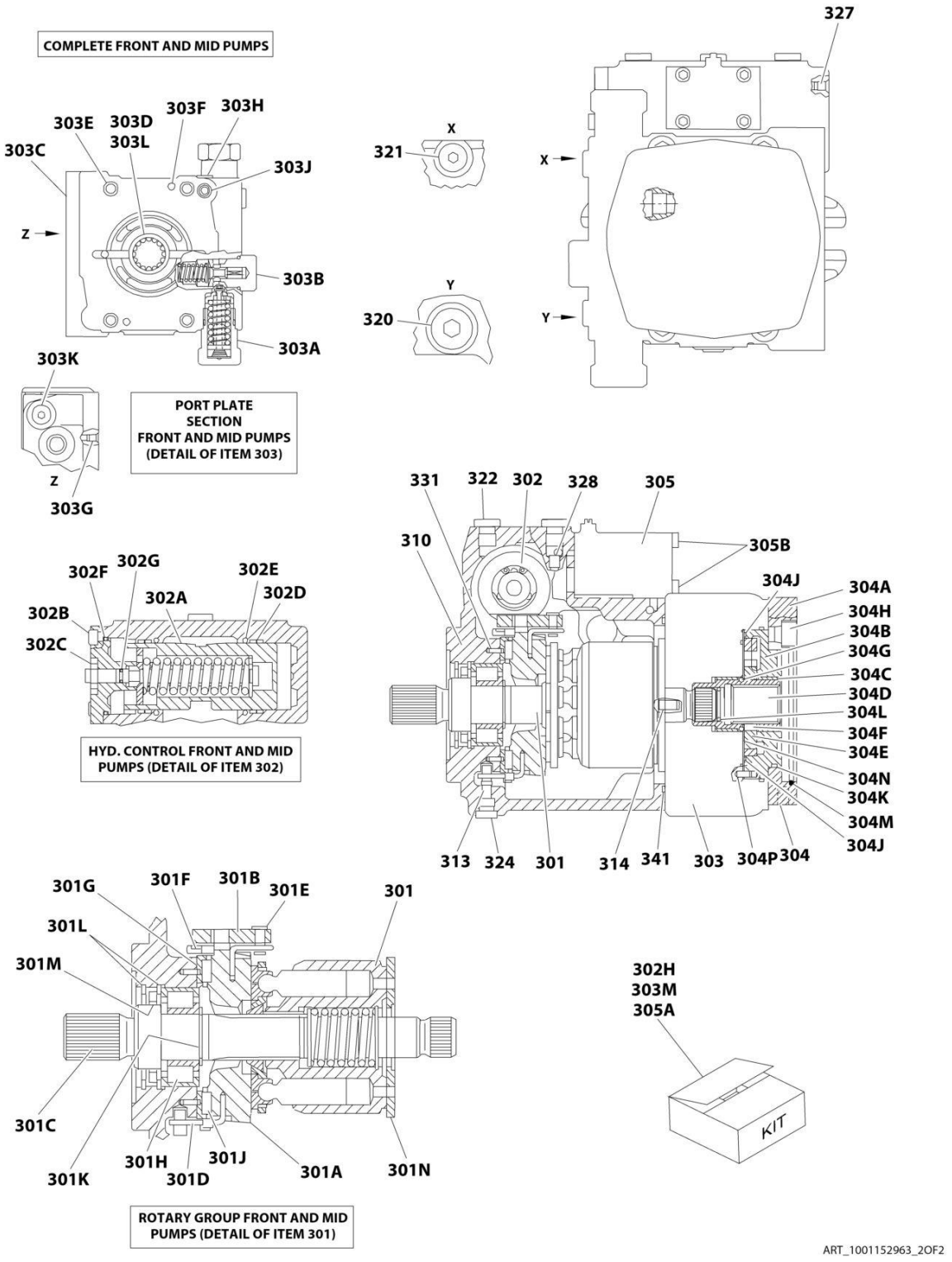
COMPLETE FRONT AND MID PUMPS
303E
303D
303L
303F
303H
303C
303J
Z
303B
303A
303K
Z
303G
PORT PLATE SECTION FRONT AND MID PUMPS (DETAIL OF ITEM 303)
X
321
Y
320
327
X
Y
331
322
302
328
305
310
305B
304J
304A
304H
304B
304G
304C
304D
304L
304F
304E
304N
304K
304M
304J
313
324
301
314
341
303
304P
304
302F
302G
302E
302A
302D
302B
302C
HYD. CONTROL FRONT AND MID PUMPS (DETAIL OF ITEM 302)
301G
301F
301B
301E
301
301L
301M
301C
301K
301H
301D
301J
301A
301N
ROTARY GROUP FRONT AND MID PUMPS (DETAIL OF ITEM 301)
302H
303M
305A
KIT
ART_1001152963_2OF2

FIGURE 3-85. PUMP ASSEMBLY (REXROTH) (DEUTZ TCD2.9L4 ENGINES)

ITEM	PART NUMBER	QTY	DESCRIPTION	REV
	1001152963	Ref	PUMP ASSEMBLY (REXROTH) (DEUTZ TCD2.9L4 ENGINES)	C
1	70005480	1	Front Drive Pump Assembly Options (Includes Items 301-341)	
2	70005481	1	Middle Drive Pump Assembly (Includes Items 301-341)	
3	7024044	1	Rear Function Pump Assembly (Includes Items 101-201)	
4	See Note	NSS	Hydraulic Kit (Includes all Rexroth Supplied Hydraulic Fittings, Hoses and Tubes) (Note: Not Available for Purchase)	
	7024044	Ref	REAR FUNCTION PUMP ASSEMBLY	
101	70003173	1	Rotary Section	
102	See Note	1	Piston Control (Note: Not Available - Purchase Complete Assembly)	
103	See Note	1	Rod, Piston (Note: Not Available - Purchase Complete Assembly)	
105	See Note	1	Housing, Pump (Note: Not Available - Purchase Complete Assembly)	
106	See Note	1	Plate, Port (Note: Not Available - Purchase Complete Assembly)	
107	70003174	1	Plate, Swash	
108	70003175	1	Driveshaft	
109	See Note	1	Plug (Note: Not Available for Purchase)	
110	See Note	1	Spring (Note: Not Available for Purchase)	
112		Ref	Shim	
115	7024038	1	Bearing, Roller	
116	7012706	1	Bearing, Roller	
117	7024917	2	Shell, Cradle	
120	7024918	1	Seal, Shaft	
121	7024919	1	O-Ring	
122	7024920	1	O-Ring	
124	7024921	1	Seal	
125	70003177	1	V-Ring	
127	See Note	4	Capscrew M12 x 45 Grade 10.9 (Note: Not Available for Purchase)	
131	See Note	1	Plug (Note: Not Available for Purchase)	
133	See Note	1	Pin, Dowel (Note: Not Available for Purchase)	
134	See Note	1	Plug (Note: Not Available for Purchase)	
201	7024913	Ref	Pilot Valve Assembly	
		Ref	Note: Two mounting designs of p/n 7024913 pilot valve exist. Early design uses qty. 3 o-rings. Late design uses qty. 1 sealing plate. Seal designs cannot be interchanged. Verify seal design before ordering.	
201	7024922	3	O-Ring (Seals between Pilot Valve and Rear Pump)	
201	70021867	1	Plate, Sealing (Seals between Pilot Valve and Rear Pump)	
		Ref	FRONT DRIVE PUMP ASSEMBLIES	
	70005480	Ref	Front Drive Pump Assembly	
	70005481	Ref	Middle Drive Pump Assembly	
		Ref	Note: Service Parts not available at time of printing, call-out number on illustration for ref only.	
301	7024064	1	Rotary Group	
301A	See Note	NSS	Cradle (Note: Use Item 301)	
301B	See Note	NSS	Ring, Slide (Note: Use Item 301)	
301C	7023887	1	Driveshaft	
301D	See Note	NSS	Wire (Note: Use Item 301)	
301E	See Note	NSS	Pin, Joint (Note: Use Item 301)	
301F	See Note	NSS	Wire (Note: Use Item 301)	
301G	See Note	NSS	Liner, Bearing (Note: Use Item 301)	

ITEM	PART NUMBER	QTY	DESCRIPTION	REV
301H	See Note	NSS	Bearing, Roller (Note: Use Item 301)	
301J	See Note	NSS	Cradle Bearing Assembly (Note: Use Item 301)	
301K	70001968	1	Ring, Retaining	
301L	See Note	NSS	Ring, Retaining (Note: Not Available for Purchase)	
301M	70003167	1	Seal, Shaft Ring	
301N	70000950	1	Plate	
302	7024065	1	Control Group - Hydraulic	
302A	See Note	NSS	Piston, Positioning - Complete (Note: Use Item 302)	
302A	See Note	NSS	O-Ring, Outer Seal (Note: Not Available for Purchase)	
302A	See Note	NSS	O-Ring, Stem (Note: Not Available for Purchase)	
302B	See Note	4	Capscrew M6 x 12 (Note: Not Available - Purchase Locally)	
302C	See Note	NSS	Nut (Note: Use Item 302)	
302D	See Note	NSS	Ring, Guide (Note: Use Item 302)	
302E	See Note	NSS	Seal, O-Ring (Note: Use Item 302)	
302F	7024071	1	O-Ring	
302G	7024072	1	O-Ring	
302H	7024006	1	Seal Kit - Control Section	
303	7024905	1	Port Plate Group (Front)	
303	7024911	1	Port Plate Group (Mid)	
303A	7024073	1	Cartridge, Relief Valve (High Pressure)	
303A	7024075	1	O-Ring	
303A	7024076	1	Ring, Back-up	
303B		Ref	Cartridge Options:	
303B	7024907	1	Front Pump Cartridge (Lock Valve With Orifice)	
303B	7024909	1	Screw, Locking	
303B	7024075	1	O-Ring	
303B	70020329	1	Middle Pump Cartridge (Pressure Relief Valve)	
303B	7024909	1	Screw, Locking	
303B	7024077	1	O-Ring	
303C	See Note	NSS	Plate, Port (Note: Use Item 303)	
303D	See Note	NSS	Bushing, Bearing (Note: Use Item 303)	
303E	See Note	4	Capscrew M12 x 70 Grade 10.9 (Note: Not Available - Purchase Locally)	
303F	See Note	NSS	Pin, Dowel (Note: Use Item 303)	
303G	70003340	1	Pin, Break-Off	
303H	See Note	1	Screw, Locking M10 x 1 (Note: Not Available - Purchase Locally)	
303J	7024908	1	O-Ring	
303K	See Note	2	Screw, Locking 7/16 (Note: Not Available - Purchase Locally)	
303L	See Note	NSS	Bearing, Roller (Note: Use Item 303)	
303M	7024006	1	Seal Kit - Port Plate Group	
304	7024906	1	Internal Gear Pump	
304A	See Note	NSS	Flange, Intermediate (Note: Use Item 304)	
304B	See Note	NSS	IZP-Housing (Note: Use Item 304)	
304C	See Note	NSS	Bushing, Bearing (Note: Use Item 304)	
304D	See Note	NSS	Coupling, Driveshaft Through (Note: Use Item 304)	
304E	7024078	1	Gear Set	
304F	7024079	1	Key, Driveshaft	
304G	80934174	1	Ring, Retaining	
304H	See Note	4	Capscrew M10 x 20 (Note: Not Available - Purchase Locally)	
304J	See Note	NSS	Seal (Note: Not Available for Purchase)	
304K	7024081	1	O-Ring	

SECTION 3 - ENGINE

ITEM	PART NUMBER	QTY	DESCRIPTION	REV
304L	See Note	NSS	Ring, Retaining (Note: Use Item 304)	
304M	See Note	NSS	O-Ring (Note: Use Item 304)	
304N	See Note	NSS	Plate, Wear (Note: Not Available for Purchase)	
304P	See Note	NSS	Pin, Cylinder (Note: Use Item 304)	
305	70003165	1	Control Module	
305	70003170	1	Coil, Solenoid	
305A	70020336	1	Seal Kit - Control Module	
305B	80934644	4	Capscrew	
310	See Note	1	Housing (Note: Not Available for Purchase)	
313	See Note	2	Pin, Dowel (Note: Not Available for Purchase)	
314	See Note	1	Pin, Cylinder (Note: Not Available for Purchase)	
320	7026980	1	Screw 7/8 (Front Drive Pump Only)	
321	80334079	1	Screw 9/16	
322	See Note	1	Screw 7/16 (Note: Not Available - Purchase Locally)	
324	See Note	1	Screw M10 x 1 (Note: Not Available - Purchase Locally)	
327	70003340	1	Pin, Double Break-Off	
328	7018936	1	Orifice	
331	7024096	2	Pin, Clamping	
341	7024069	1	O-Ring	
342	70007178	1	O-Ring	

FIGURE 3-86. PUMP ASSEMBLY (SAUER TANDEM)

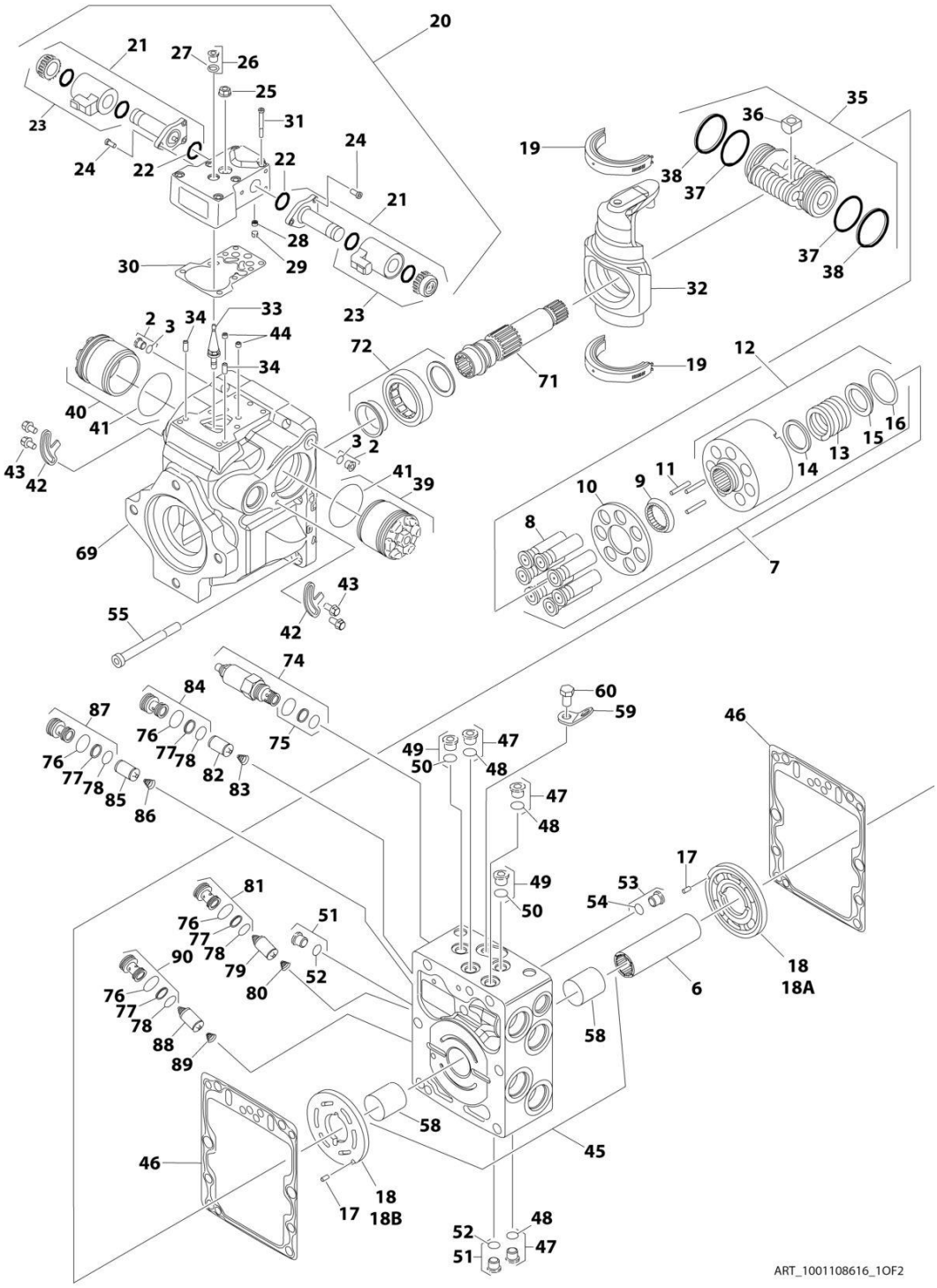

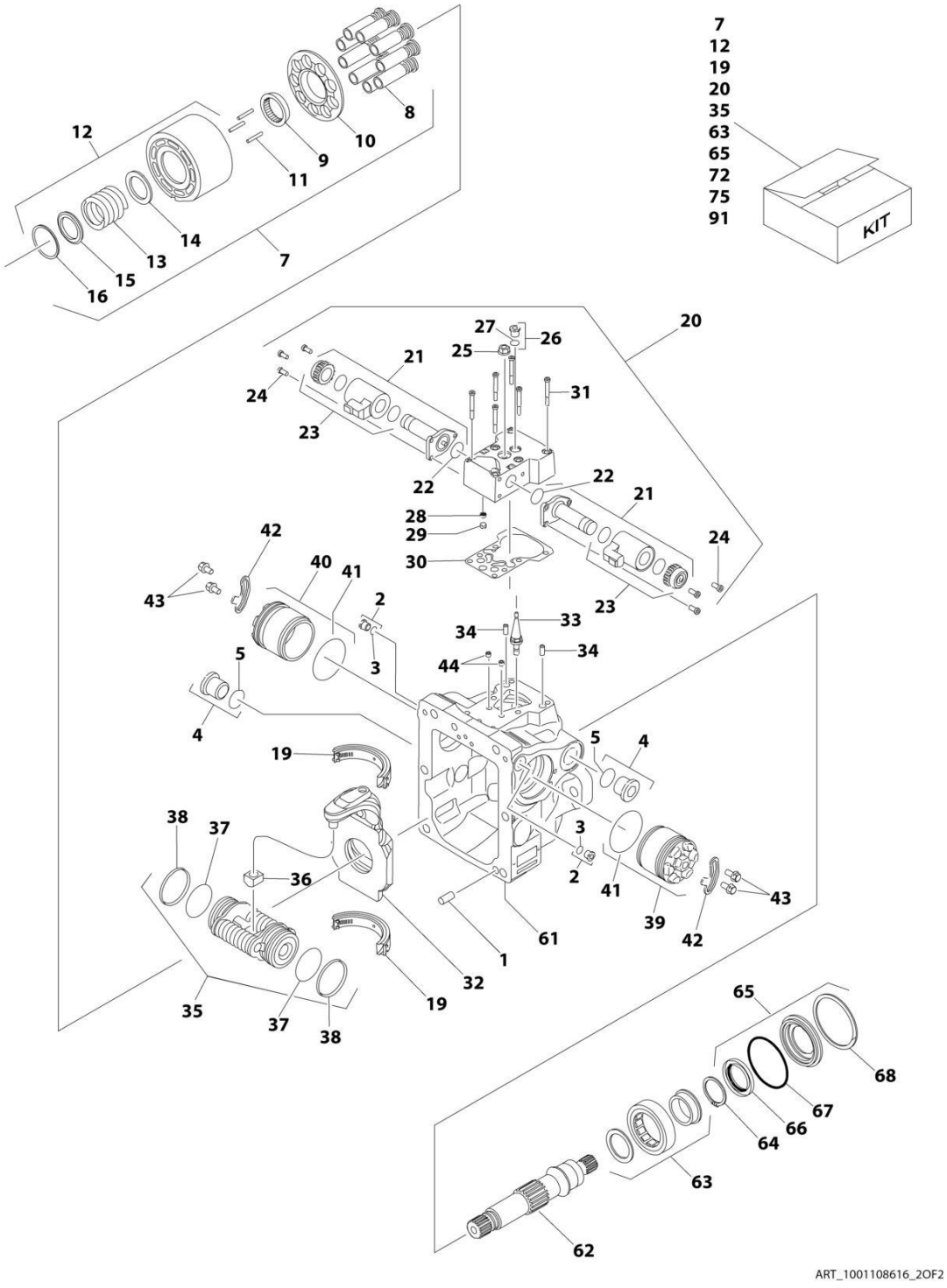
7
12
19
20
35
63
65
72
75
91
KIT
ART_1001108616_2OF2

FIGURE 3-86. PUMP ASSEMBLY (SAUER TANDEM)

ITEM	PART NUMBER	QTY	DESCRIPTION	REV
	1001108616	Ref	PUMP ASSEMBLY (SAUER TANDEM)	D
1	70002132	4	Pin	
2	70002133	4	Plug Assembly (Includes Item 3)	
3	7007207	4	O-Ring (Part of Item 2)	
4	7007419	2	Plug Assembly (Includes Item 5)	
5	7007418	2	O-Ring (Part of Item 4)	
6	70002600	1	Coupling	
7	70002135	2	Cylinder Block Kit (Each Kit Includes Qty 1 of Items 8-10 & 12-16 & Qty 3 of Item 11)	
8	70002136	2	Piston Assembly Kit (Includes Qty 9 Piston Assemblies) (Part of Item 7)	
9	70002137	2	Guide, Slipper Retainer (Part of Item 7)	
10	70002138	2	Retainer, Slipper (Part of Item 7)	
11	7021275	6	Pin, Slipper Retainer Holddown (Part of Item 7)	
12	70002135	2	Cylinder Block Assembly (Includes Qty 1 of Item 13-16) (Part of Item 7)	
13	70002139	2	Spring (Part of Item 12)	
14	70002140	2	Washer (Part of Item 12)	
15	70002141	2	Washer (Part of Item 12)	
16	70002142	2	Ring, Retaining (Part of Item 12)	
17	7007446	2	Pin	
18		Ref	Plate, Valve Options:	
18A	70002601	1	Plate, CW Valve	
18B	70002602	1	Plate, CCW Valve	
19	70002145	2	Swash Plate Bearing Kit (Includes Qty 2 Bearings)	
20	70002618	2	EDC Kit (Includes Items 21-31)	
21	70002619	4	Solenoid Valve Assembly (Includes Items 22 & 23) (Part of Item 20)	
22	70002148	4	O-Ring (2 Per EDC Assembly) (Part of Item 21)	
23	70002620	4	Coil, Nut and Seals Kit (2 Per EDC Assembly) (Part of Item 21)	
24	70002150	12	Screw (Part of Item 20)	
25	7022301	2	Nut, Seal (Part of Item 20)	
26	70002151	2	Plug Assembly (Part of Item 20) (Includes Item 27)	
27	7007207	2	O-Ring (Part of Item 26)	
28	70002134	2	Screen (Part of Item 20)	
29	70002153	2	Ring, Locking (Part of Item 20)	
30	70002154	2	Gasket, Control (Part of Item 20)	
31	70002156	12	Capscrew (Part of Item 20)	
32	70002152	2	Swash Plate	
33	70002155	2	Link, Swash Plate	
34	70002157	4	Pin, Dowel	
35	70002158	2	Servo Piston Assembly (Includes Items 36-38)	
36	70002159	2	Block, Slider (Part of Item 35)	
37	70002160	2	O-Ring (Part of Item 35)	
38	70002161	2	Ring, Piston (Part of Item 35)	
39	70002162	2	Cylinder, Servo	
40	70002162	2	Cylinder, Servo	
41	70002163	4	O-Ring	
42	70002164	4	Plate, Locking	
43	70002165	8	Screw	

ITEM	PART NUMBER	QTY	DESCRIPTION	REV
44	70002604	4	Orifice	
45	70002605	1	Center Section Assembly (Includes Item 58)	
46	70002168	2	Gasket, End Cap	
47	70001958	2	Plug Assembly (Includes Item 48)	
48	7021256	2	O-Ring (Part of Item 47)	
49	70001958	2	Plug Assembly (Includes Item 50)	
50	7021256	2	O-Ring (Part of Item 49)	
51	70001958	2	Plug Assembly (Includes Item 52)	
52	7021256	2	O-Ring (Part of Item 51)	
53	70001958	2	Plug Assembly (Includes Item 54)	
54	7021256	2	O-Ring (Part of Item 53)	
55	70002606	4	Capscrew	
58	70002607	2	Bearing, Journal (Part of Item 45)	
59	70002608	1	Bracket, Lifting	
60	70002609	1	Screw	
61	See Note	1	Housing (Note: Not Available for Purchase)	
62	70002175	1	Shaft	
63	70002610	1	Ball Bearing Kit	
	7007439	1	Ring, Retaining	
65	70002174	1	Shaft Seal Kit (Includes Items 66-68) (Note: This is a universal kit and will contain extra pieces that are not used on this pump assembly)	
66	70002177	1	Seal, Lip	
67	70002178	1	O-Ring	
68	70002179	1	Ring, Retaining	
69	See Note	1	Housing (Note: Not Available for Purchase)	
71	70002612	1	Shaft	
72	70002610	1	Ball Bearing Kit	
74	70002621	1	High Pressure Relief Valve Cartridge Assembly (Includes Item 75)	
75	70002622	1	Seal Kit - 70002621 Valve (Part of Item 74)	
76	7007415	1	O-Ring (Part of Items 81, 84, 87 & 90)	
77	7021293	1	Ring, Back-up (Part of Items 81, 84, 87 & 90)	
78	7022300	1	O-Ring (Part of Items 81, 84, 87 & 90)	
79	70002616	1	SCR Valve Assembly	
80	7024800	1	Spring	
81	7021265	1	Plug Assembly (Includes Qty 1 of Items 76-78)	
82	70002616	1	SCR Valve Assembly	
83	7024800	1	Spring	
84	7021265	1	Plug Assembly (Includes Qty 1 of Item 76-78)	
85	70002616	1	SCR Valve Assembly	
86	7024800	1	Spring	
87	70002617	1	Plug Assembly (Includes Qty 1 of Item 76-78)	
88	70002616	1	SCR Valve Assembly	
89	7024800	1	Spring	
90	7021265	1	Plug Assembly (Includes Qty 1 of Items 76-78)	
91	70002623	1	Overhaul Seal Kit (Includes Items 3, 5, 22, 27, 30, 37, 38, 41, 46, 48, 50, 52, 54, 66, 67, 75, 76, 77 & 78)	

FIGURE 3-87. PUMP ASSEMBLY (SAUER PISTON)

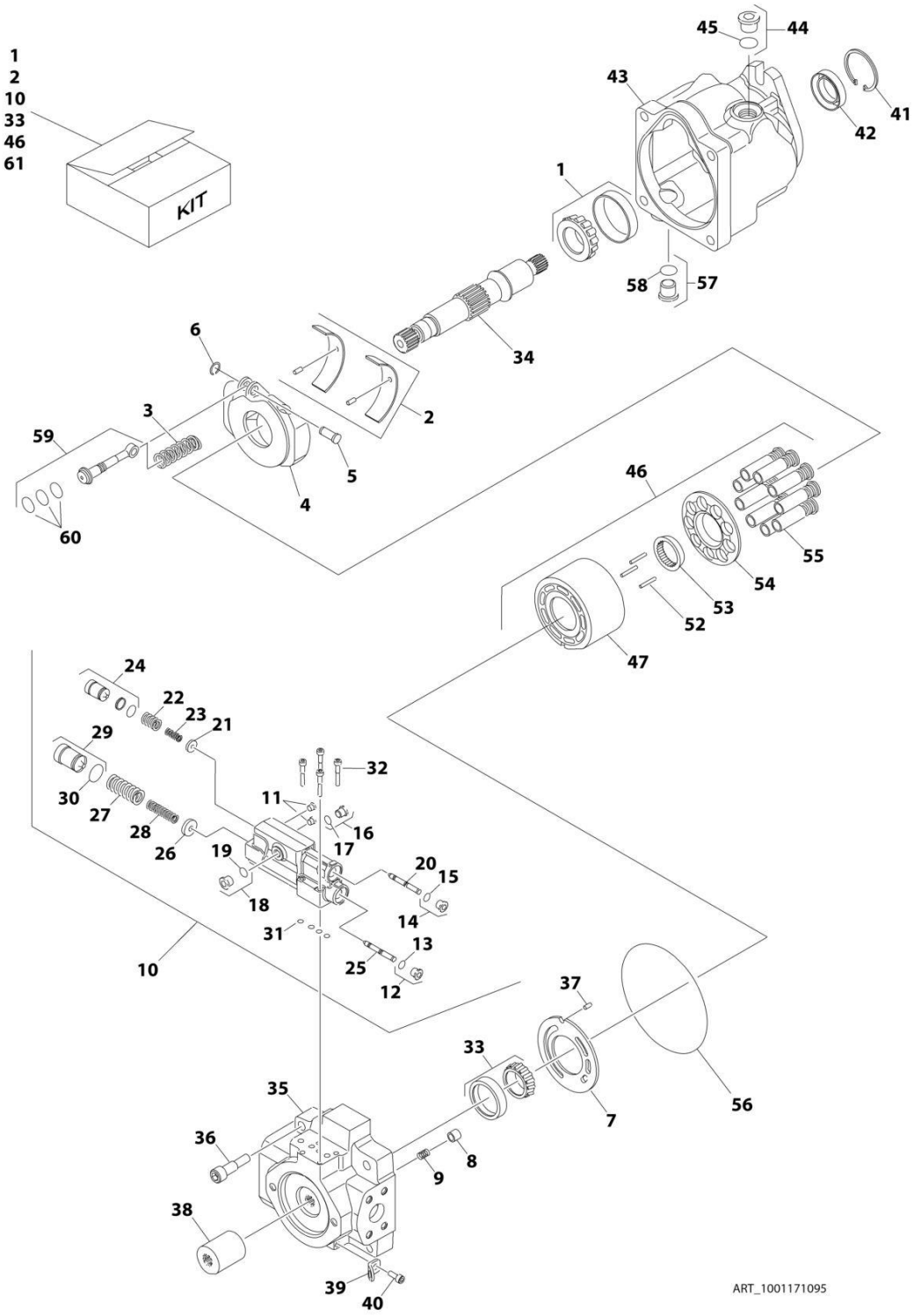

FIGURE 3-87. PUMP ASSEMBLY (SAUER PISTON)

ITEM	PART NUMBER	QTY	DESCRIPTION	REV
	1001171095	Ref	PUMP ASSEMBLY (SAUER PISTON)	B
1	70002578	1	Bearing Kit - Front (Includes Cup and Cone)	
2	70004426	1	Swash Plate Bearing Kit (Includes Qty 2 Bearings and Retainer Pins)	
3	70002580	1	Spring, Bias	
4	70004416	1	Swash Plate Assembly	
5	70002582	1	Shaft	
6	70002583	1	Ring, Retaining	
7	70004417	1	Plate, Valve	
8	70001956	1	Poppet, Check Valve	
9	70001955	1	Spring	
10	70022286	1	Control Kit (Includes Items 11-32)	
11	See Note	NSS	Setscrew (Note: Use Item 10)	
12	70002133	1	Plug Assembly (Includes Item 13)	
13	7007207	1	O-Ring (Part of Item 12)	
14	70002133	1	Plug Assembly (Part of Item 15)	
15	7007207	1	O-Ring (Part of Item 14)	
16	70002133	1	Plug Assembly (Includes Item 17)	
17	7007207	1	O-Ring (Part of Item 16)	
18	70002133	1	Plug Assembly (Includes Item 19)	
19	7007207	1	O-Ring (Part of Item 18)	
20	See Note	NSS	Spool (Note: Use Item 10)	
21	See Note	NSS	Guide, Spring LS (Note: Use Item 10)	
22	See Note	NSS	Spring, Outer LS (Note: Use Item 10)	
23	See Note	NSS	Spring, Inner LS (Note: Use Item 10)	
24	See Note	NSS	Plug, Adjusting LS (Note: Use Item 10 or 61)	
25	See Note	NSS	Spool, Control (Note: Use Item 10)	
26	See Note	NSS	Guide, Spring PC (Note: Use Item 10)	
27	See Note	NSS	Spring, Outer PC (Note: Use Item 10)	
28	See Note	NSS	Spring, Inner PC (Note: Use Item 10)	
29	See Note	NSS	Plug, Adjusting PC (Note: Use Item 10)	
30	See Note	NSS	O-Ring (Note: Use Item 10 or 61)	
31	See Note	NSS	Ring, Seal (Note: Use Item 10 or 61)	
32	See Note	NSS	Capscrew (Note: Use Item 10)	
33	70002585	1	Bearing Kit - Rear (Includes Cup and Cone)	
34	70002586	1	Shaft	
35	70004420	1	Cap, End	
36	70002588	4	Capscrew	
37	7007446	1	Pin, Slotted	
38	70002589	1	Coupling	
39	7022340	1	Bracket, Lifting	
40	70002590	1	Capscrew	
41	7023962	1	Ring, Retaining	
42	See Note	NSS	Seal, Lip (Note: Use Item 61)	
43	See Note	NSS	Housing (Note: Not Available for Purchase)	
44	7023964	1	Plug Assembly (Includes Item 45)	
45	7007415	1	O-Ring (Part of Item 44)	
46	70004423	1	Cylinder Block Kit (Includes Items 47-55)	
47	70004421	1	Cylinder	
52	7021275	3	Pin, Hold-down	

ITEM	PART NUMBER	QTY	DESCRIPTION	REV
53	70002592	1	Guide, Slipper Retainer	
54	70002593	1	Retainer, Slipper	
55	70004422	1	Piston Assembly	
56	See Note	NSS	Seal, End Cap (Note: Use Item 61)	
57	7023964	1	Plug, O-Ring (Includes Item 58)	
58	7007415	1	O-Ring (Part of Item 57)	
59	70005418	1	Servo Piston Assembly (Includes Item 60)	
60	See Note	NSS	Ring, Piston (Part of Item 59) (Note: Use Item 61)	
61	70002599	1	Complete Seal Kit (Includes Items 13, 15, 17, 19, 24, 30, 31, 42, 45, 56, 58 & 60)	

FIGURE 3-88. PUMP ASSEMBLY (SAUER GEAR)

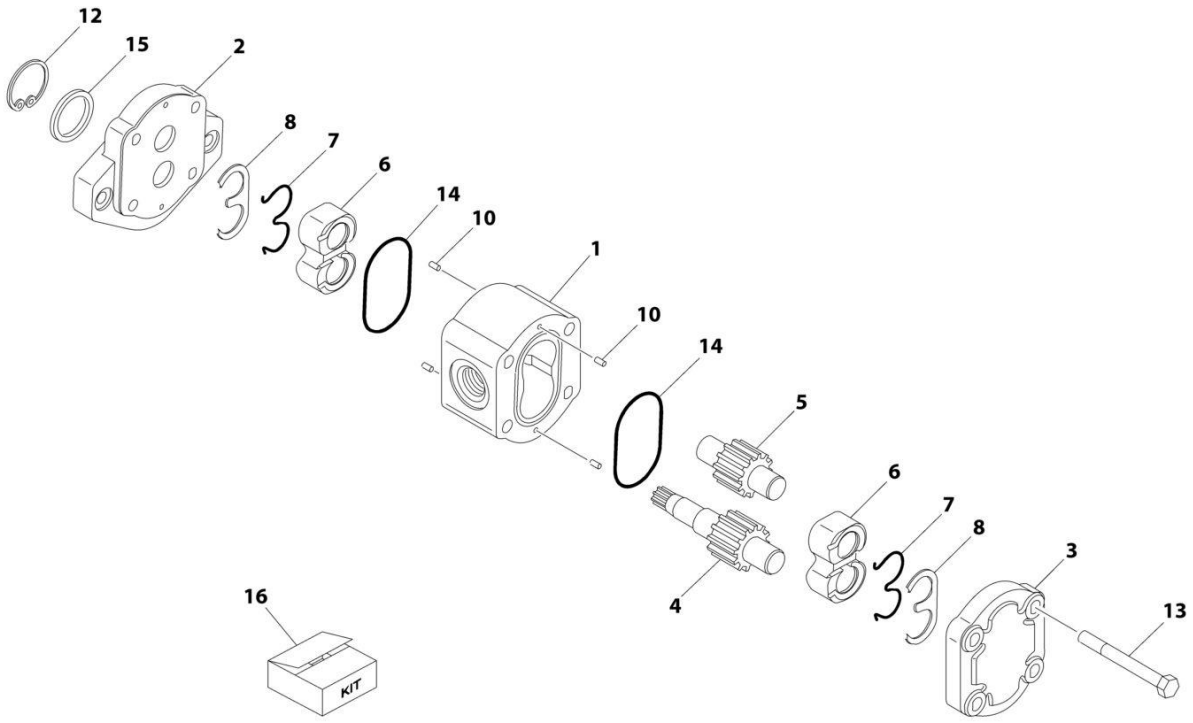

FIGURE 3-88. PUMP ASSEMBLY (SAUER GEAR)

ITEM	PART NUMBER	QTY	DESCRIPTION	REV
	1001112927	Ref	PUMP ASSEMBLY (SAUER GEAR)	A
1	See Note	NSS	Body (Note: Use p/n 1001112927)	
2	See Note	NSS	Cover, Front (Note: Use p/n 1001112927)	
3	See Note	NSS	Cover, Rear (Note: Use p/n 1001112927)	
4	See Note	NSS	Shaft, Gear (Note: Use p/n 1001112927)	
5	See Note	NSS	Gear, Idler (Note: Use p/n 1001112927)	
6	See Note	NSS	Block, Bearing (Note: Use p/n 1001112927)	
7	7007489	2	Ring, Anti-Extrusion	
8	7007489	2	Ring, Seal	
10	See Note	NSS	Pin, Dowel (Note: Use p/n 1001112927)	
12	70002576	1	Ring, Retaining	
13	See Note	NSS	Capscrew (Note: Use p/n 1001112927)	
14	7007489	2	O-Ring	
15	7007489	1	Seal, Lip	
16	7007489	1	Seal Kit - 1001112927 Pump (Includes Items 7, 8, 14 & 15)	

FIGURE 3-89. PUMP ASSEMBLY - HYDRAULIC TANDEM

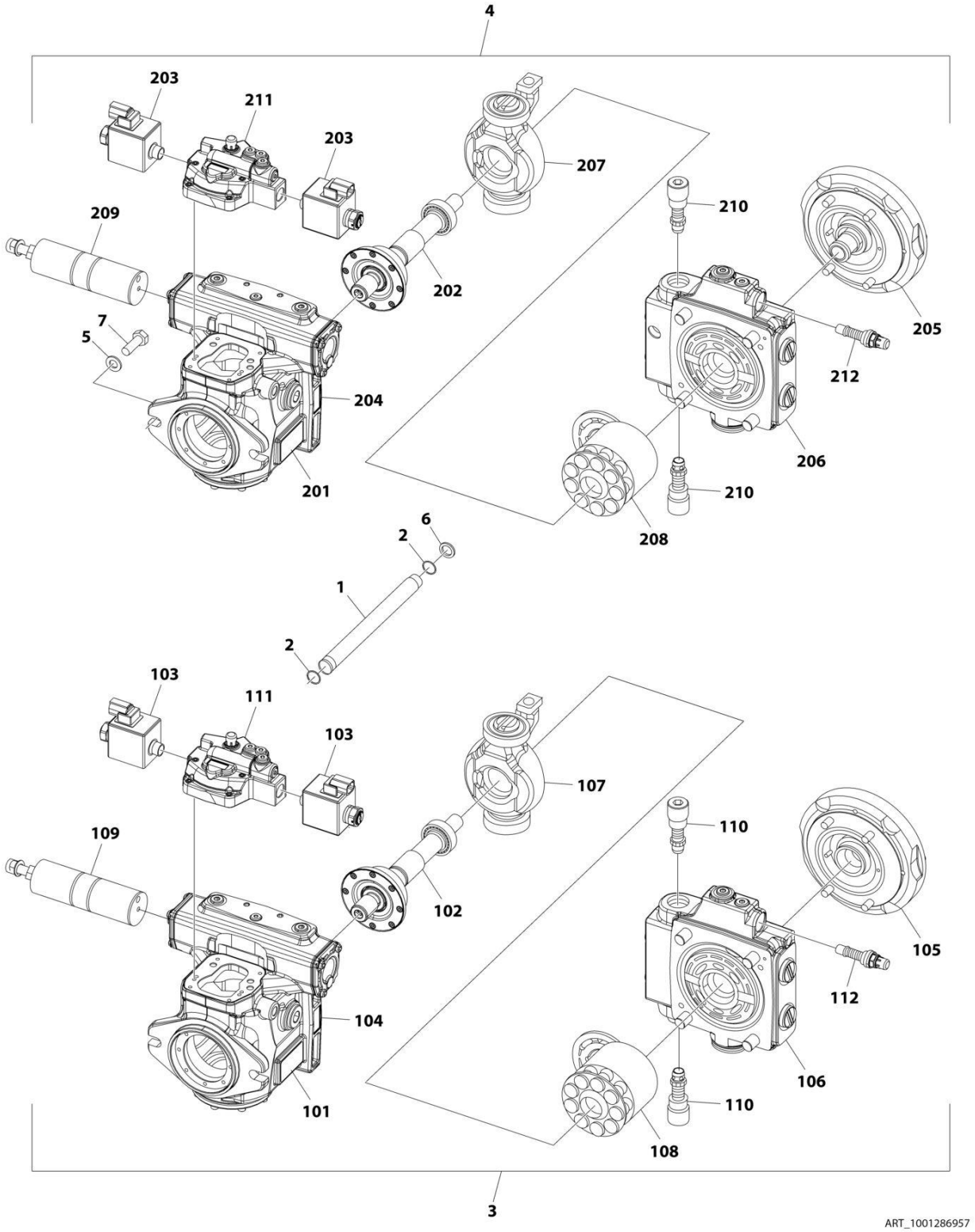

FIGURE 3-89. PUMP ASSEMBLY - HYDRAULIC TANDEM

ITEM	PART NUMBER	QTY	DESCRIPTION	REV
	1001286957	Ref	PUMP ASSEMBLY - HYDRAULIC TANDEM	A
	See Note	Ref	(Note: No Other Service Parts Available)	
1	70008490	1	Shaft	
2	70008491	2	O-Ring	
3	70008492	1	Front Pump Assembly (Includes Items 101-112)	
4	70008493	1	Rear Pump Assembly (Includes Items 201-212)	
5	70008494	2	Washer M12	
6	70008495	1	Washer M12	
7	70008496	2	Bolt M12 x 35 CL10.9	
101	See Note	NSS	Plate, Serial Number (Note: Not Available for Purchase)	
102	70008497	1	Shaft	
103	70008498	2	Coil	
104	See Note	1	Housing Assembly (Note: Purchase PN 70008492)	
104	70008506	1	Gasket (Between Housing & Distributor Valve)	
104	70005023	2	Rivet	
105	70008511	1	Body	
106	70008499	1	Valve, Distributor	
107	70008500	1	Swash Plate	
108	70008501	1	Rotor	
109	70008502	1	Servo	
110	70008503	2	Cartridge, Relief Valve	
111	70008504	1	Valve, Control	
111	70008507	1	Gasket (Between Control Valve & Housing)	
111	70008508	3	O-Ring	
112	70008505	1	Cartridge, Relief Valve	
201	See Note	NSS	Plate, Serial Number (Note: Not Available for Purchase)	
202	70008509	1	Shaft	
202	70005041	1	Ring, Retaining	
203	70008498	2	Coil	
204	NPN	1	Assembly, Housing	
204	See Note	1	Housing Assembly (Note: Purchase PN 70008493)	
204	70008506	1	Gasket (Between Housing & Distributor Valve)	
204	70005023	2	Rivet	
205	70008512	1	Body	
206	70008510	1	Valve, Distributor	
207	70008500	1	Swash Plate	
208	70008501	1	Rotor	
209	70008502	1	Servo	
210	70008503	2	Cartridge, Relief Valve	
211	70008504	1	Valve, Control	
211	70008507	1	Gasket (Between Control Valve & Housing)	
211	70008508	3	O-Ring	
212	70008505	1	Cartridge, Relief Valve	

FIGURE 3-90. PUMP ASSEMBLY - HYDRAULIC PISTON

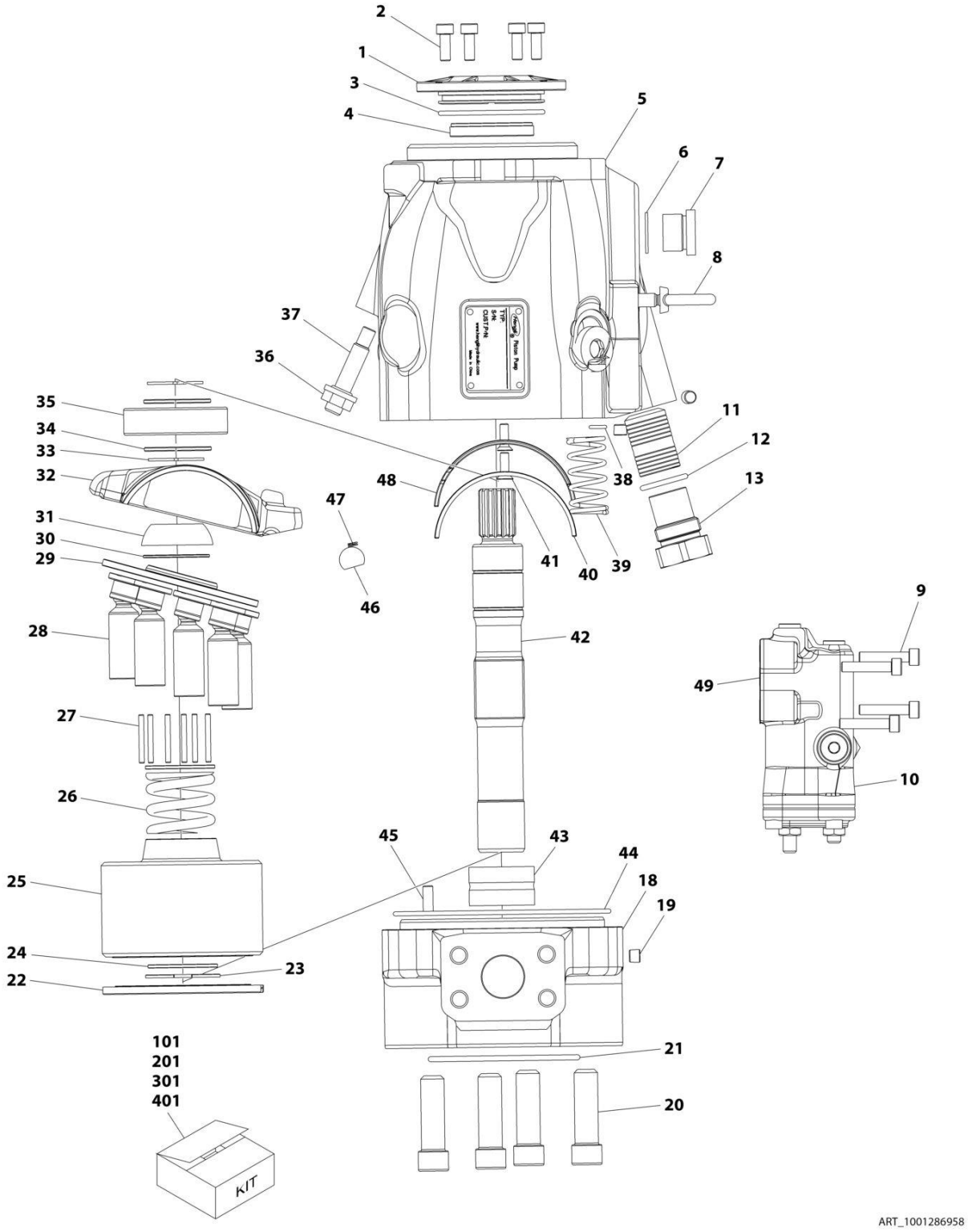

FIGURE 3-90. PUMP ASSEMBLY - HYDRAULIC PISTON

ITEM	PART NUMBER	QTY	DESCRIPTION	REV
	1001286958	Ref	PUMP ASSEMBLY - HYDRAULIC PISTON	A
1	70007789	1	Cap	
2	NPN	4	Bolt M6 x 16	
3	See Note	1	O-Ring (Note: Not Sold Separately, Purchase Item 401)	
4	70007798	1	Seal	
5	NPN	1	Housing	
6	See Note	3	O-Ring (Note: Not Sold Separately, Purchase Item 401)	
7	70007790	3	Plug	
8	NPN	1	Bolt M8	
9	NPN	2	Bolt M6 x 30	
10	70007787	1	Valve, Control	
11	70007800	1	Piston	
12	See Note	1	O-Ring (Note: Not Sold Separately, Purchase Item 401)	
13	70007801	1	Plug	
18	NPN	1	Cover	
19	70007791	3	Plug	
20	NPN	4	Bolt M12 x 45	
21	See Note	1	O-Ring (Note: Not Sold Separately, Purchase Item 401)	
22	See Note	1	Plate (Note: Not Sold Separately, Purchase Item 201)	
23	See Note	1	Ring, Retaining (Note: Not Sold Separately, Purchase Item 201)	
24	See Note	2	Shim (Note: Not Sold Separately, Purchase Item 201)	
25	See Note	1	Cylinder (Note: Not Sold Separately, Purchase Item 201)	
26	See Note	1	Spring (Note: Not Sold Separately, Purchase Item 201)	
27	See Note	6	Pin (Note: Not Sold Separately, Purchase Item 201)	
28	See Note	9	Piston (Note: Not Sold Separately, Purchase Item 201)	
29	See Note	1	Retainer (Note: Not Sold Separately, Purchase Item 201)	
30	See Note	1	Shim (Note: Not Sold Separately, Purchase Item 201)	
31	See Note	1	Bushing (Note: Not Sold Separately, Purchase Item 201)	
32	See Note	1	Plate, Swash (Note: Not Sold Separately, Purchase Item 301)	
33	See Note	2	Ring, Retaining (Note: Not Sold Separately, Purchase Item 101)	
34	See Note	2	Shim (Note: Not Sold Separately, Purchase Item 101)	
35	See Note	1	Bearing (Note: Not Sold Separately, Purchase Item 101)	
36	70008526	1	Nut M10	
37	70008525	1	Screw	
38	See Note	1	O-Ring (Note: Not Sold Separately, Purchase Item 401)	
39	70007792	1	Spring	
40	70007793	1	Bushing	
41	70007796	2	Bolt M5 x 16	
42	See Note	1	Shaft (Note: Not Sold Separately, Purchase Item 101)	
43	70007797	1	Bearing	
44	70007799	1	Gasket	
45	70007794	1	Pin	
46	See Note	1	Ball (Note: Not Sold Separately, Purchase Item 301)	
47	See Note	1	Spring (Note: Not Sold Separately, Purchase Item 301)	
48	70007795	1	Bushing	
49	See Note	1	O-Ring (Note: Not Sold Separately, Purchase Item 401)	
101	70008527	1	Assembly, Shaft (Includes Items 33-35 & 42)	
201	70007786	1	Assembly, Cylinder (Includes Items 22-31)	
301	70007788	1	Assembly, Swash Plate (Includes Items 32, 46, 47)	
401	70008528	1	Kit, Seal (Includes Items 3, 6, 12, 21, 38 & 49)	

FIGURE 3-91. PUMP COUPLING KIT

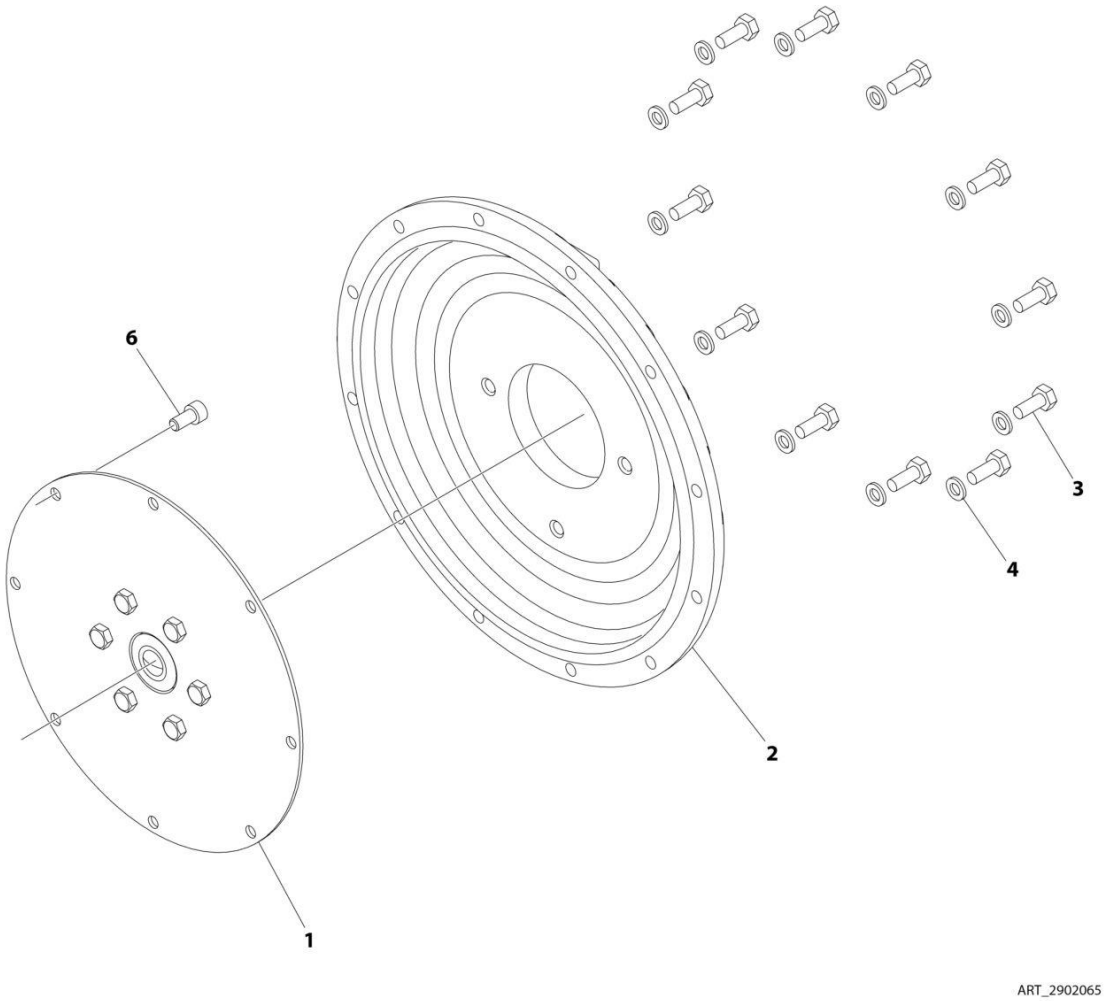

FIGURE 3-91. PUMP COUPLING KIT

ITEM	PART NUMBER	QTY	DESCRIPTION	REV
	2902065	Ref	PUMP COUPLING KIT	L
1	70000793	1	Coupling, Hayes	
2	See Note	NSS	Plate, Pump Adapter (Note: Use p/n 2902065)	
3	See Note	NSS	Bolt M10 x 30 Grade 10.9 (Note: Use p/n 2902065)	
4	See Note	NSS	Washer M10 (Note: Use p/n 2902065)	
6	See Note	NSS	Bolt M10 x 20 Grade 10.9 (Note: Use p/n 2902065)	

FIGURE 3-92. WATER/FUEL SEPARATOR INSTALLATION - DEUTZ TD2011 ENGINE

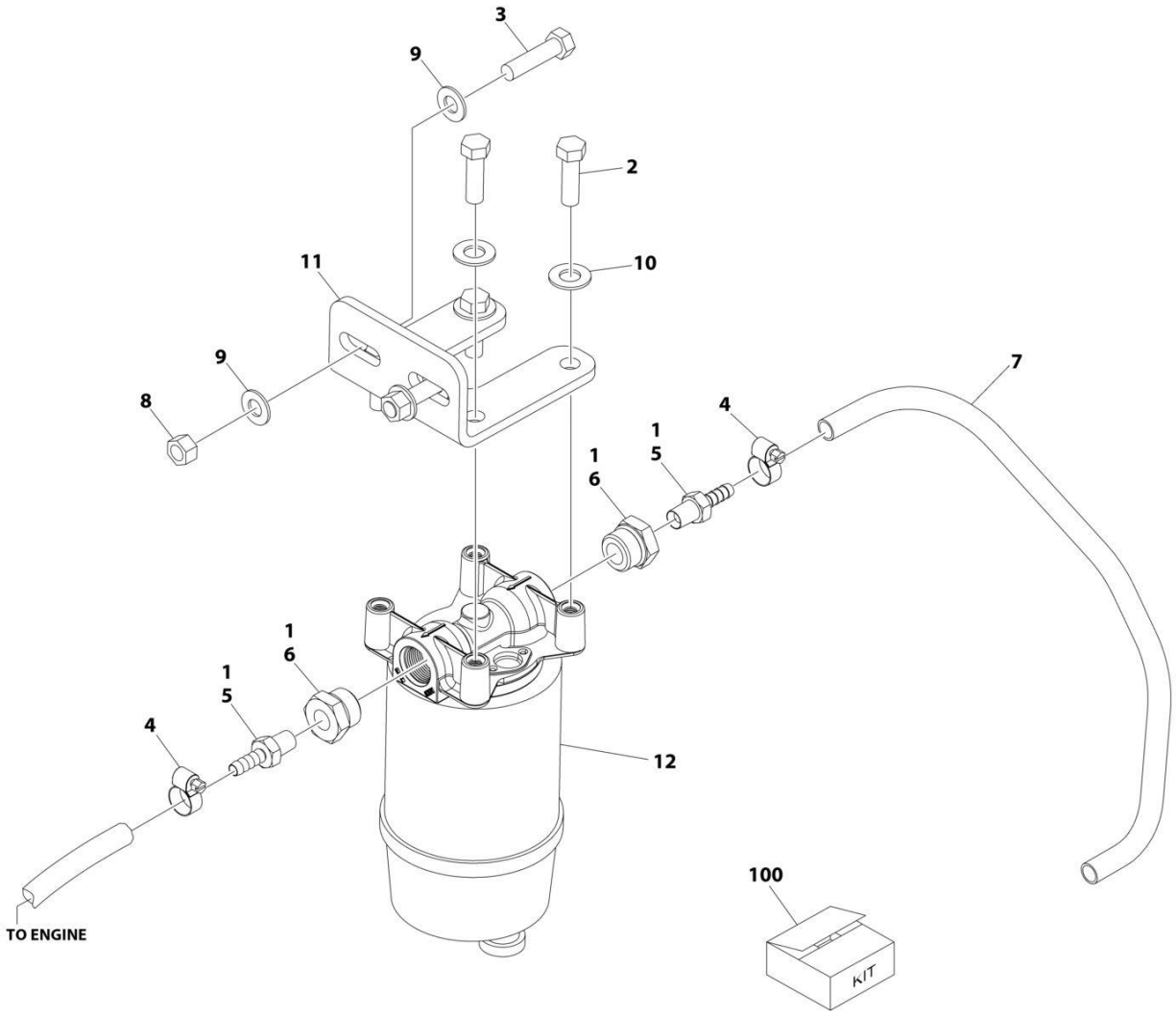

FIGURE 3-92. WATER/FUEL SEPARATOR INSTALLATION - DEUTZ TD2011 ENGINE

ITEM	PART NUMBER	QTY	DESCRIPTION	REV
	1001195214	Ref	WATER/FUEL SEPARATOR INSTALLATION - DEUTZ TD2011 ENGINE	A
1	0100079	AR	Sealant, Pipe	
2	0641610	4	Bolt 3/8 x 1-1/4	
3	0641612	2	Bolt 3/8 x 1-1/2	
4	1320022	2	Clamp	
5	2180348	1	Fitting, Barbed	
6	2220816	2	Fitting, Adapter FNPTF/ORB	
7	2720058	3.5 ft /1.1m	Hose	
8	3271601	2	Nut 3/8	
9	4711600	4	Washer 3/8	
10	4711700	4	Washer 7/16	
11	1001188884	1	Bracket, Water/Fuel	
12	1001188887	1	Filter Water/Fuel	
12	1001202280	1	Filter, Head	
12	1001202281	1	Filter, Element	
100	1001204159	1	Water/Separator Add-on Kit	

FIGURE 3-93. FUEL PUMP/FILTER BRACKET ASSEMBLY - DEUTZ TCD2.9L4 ENGINE AND DEUTZ TCD2.9L4 (STAGE V) ENGINE

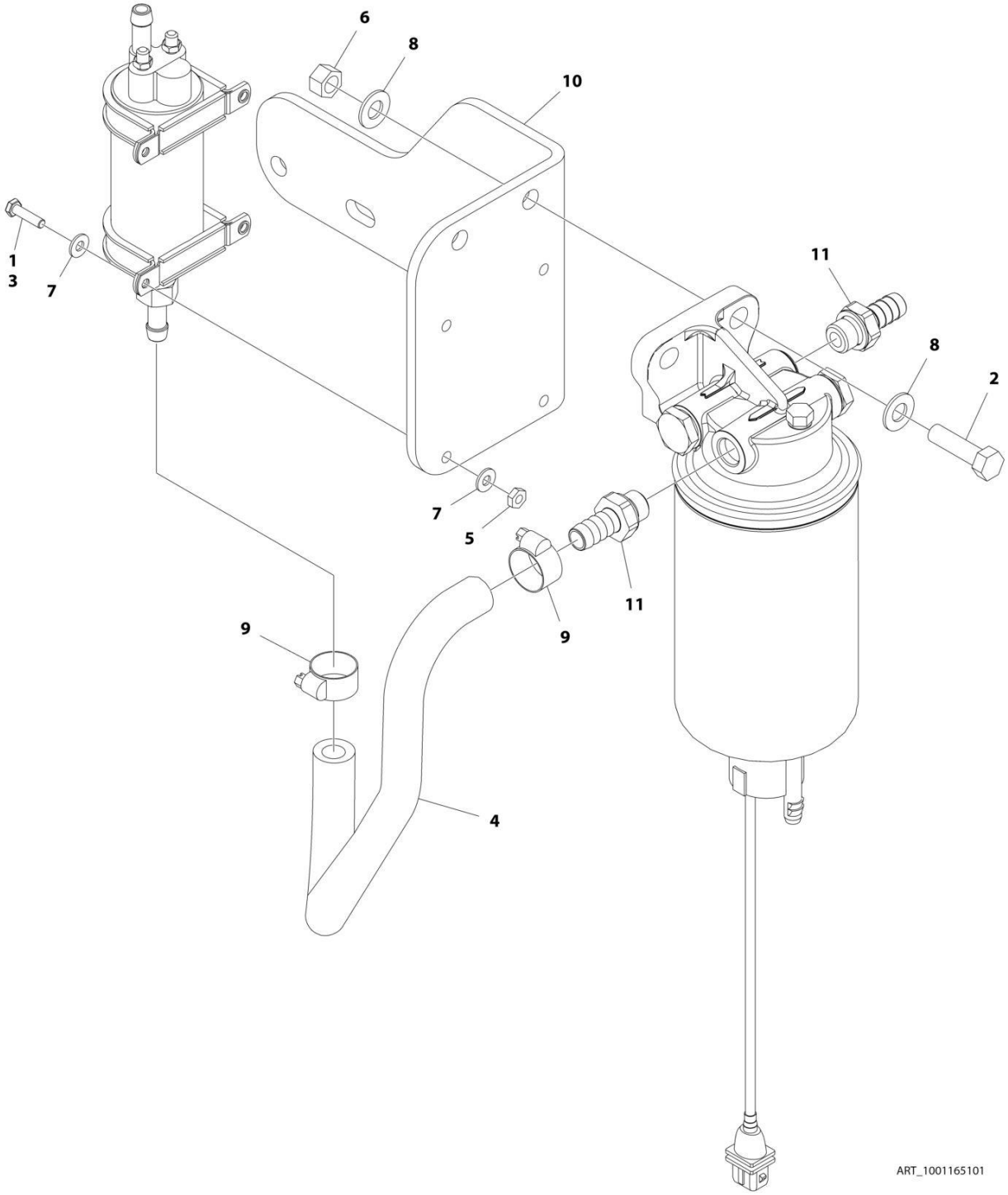

FIGURE 3-93. FUEL PUMP/FILTER BRACKET ASSEMBLY - DEUTZ TCD2.9L4 ENGINE AND DEUTZ TCD2.9L4 (STAGE V) ENGINE

ITEM	PART NUMBER	QTY	DESCRIPTION	REV
	1001165101	Ref	FUEL PUMP/FILTER BRACKET ASSEMBLY - DEUTZ TCD2.9L4 ENGINE AND DEUTZ TCD2.9L4 (STAGE V PRE-BUY) ENGINE	C
1	0100011	AR	Compound, Locking	
2	0641611	2	Bolt 3/8 x 1-3/8	
3	0721006	4	Bolt #10 x 3/4	
4	1001154405	1.5 ft /0.4m	Hose	
5	3311001	4	Nut #10	
6	3311605	2	Nut 3/8	
7	4711000	8	Washer #10	
8	4711600	4	Washer 3/8	
9	8405006	2	Clamp	
10	1001140222	1	Bracket, Fuel Pump Mounting	
11	1001141718	1	Fitting, Barbed	

FIGURE 3-94. FUEL PUMP/FILTER BRACKET ASSEMBLY - DEUTZ TD2.9L4 ENGINE (CHINA SPECS ONLY)

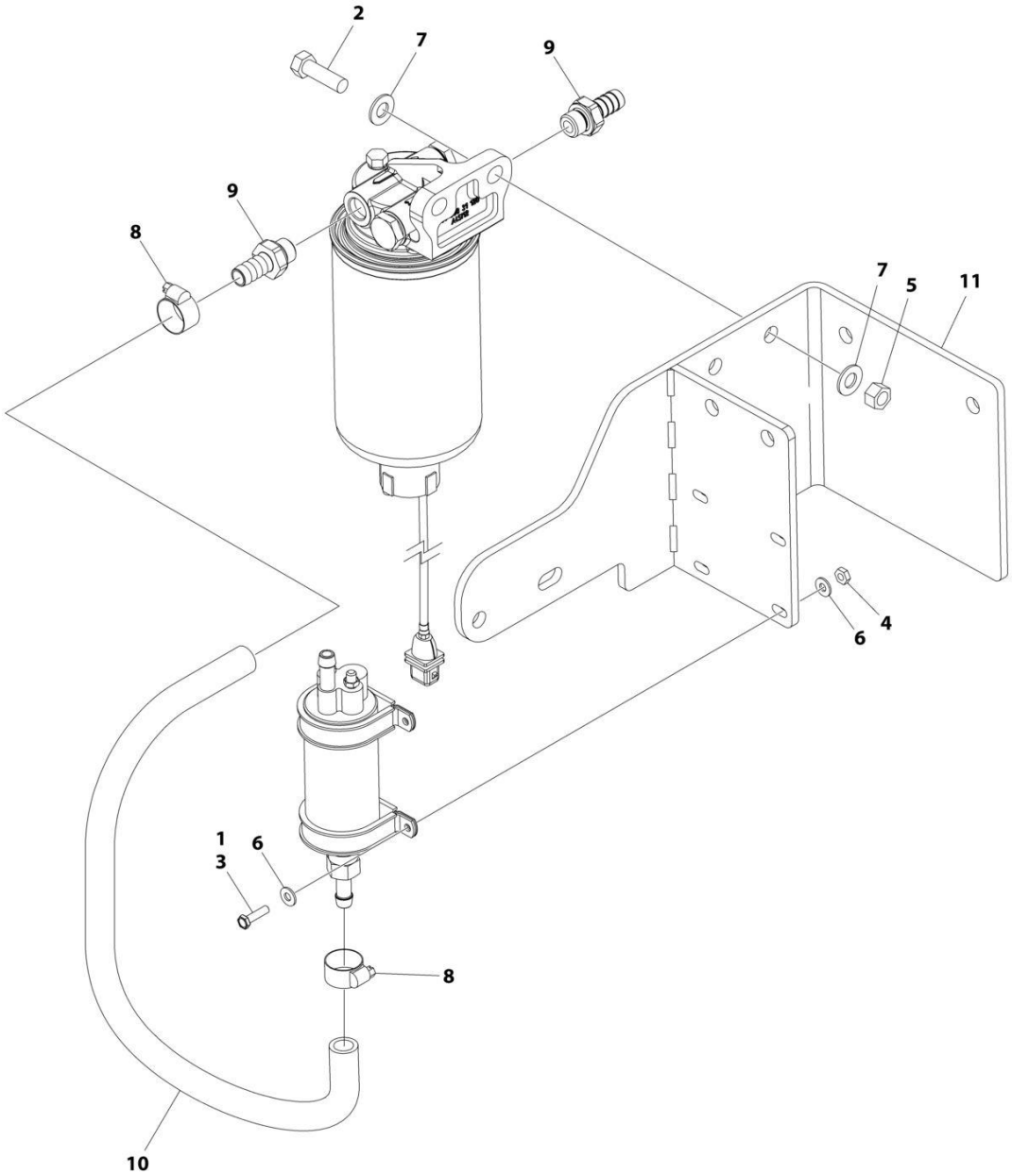

FIGURE 3-94. FUEL PUMP/FILTER BRACKET ASSEMBLY - DEUTZ TD2.9L4 ENGINE (CHINA SPECS ONLY)

ITEM	PART NUMBER	QTY	DESCRIPTION	REV
	1001227606	Ref	FUEL PUMP/FILTER BRACKET ASSEMBLY - DEUTZ TD2.9L4 ENGINE	A
1	0100011	AR	Compound, Locking	
2	0641610	2	Bolt 3/8 x 1-1/4	
3	0721006	4	Bolt #10 x 3/4	
4	3311001	4	Nut #10	
5	3311605	2	Nut 3/8	
6	4711000	8	Washer #10	
7	4711600	4	Washer 3/8	
8	8405006	2	Clamp	
9	1001141718	2	Fitting, Barbed	
10	1001154405	1.5 ft/ 0.4m	Hose	
11	1001222773	1	Bracket, Fuel Pump Mounting	

FIGURE 3-95. FUEL FILTER/WATER SEPARATOR INSTALLATION - DEUTZ TD2.9L4 & TCD2.9L ENGINES

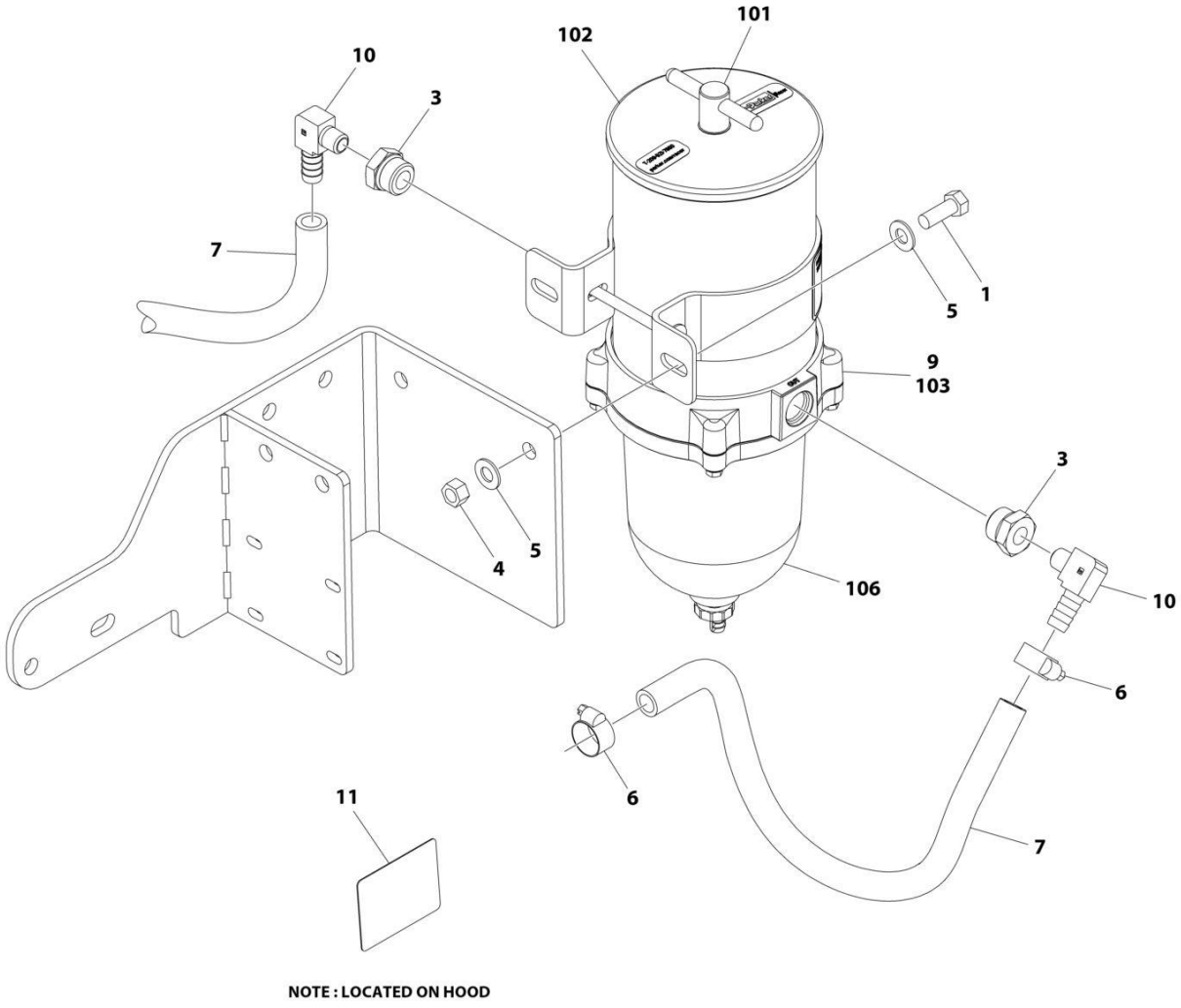

FIGURE 3-95. FUEL FILTER/WATER SEPARATOR INSTALLATION - DEUTZ TD2.9L4 & TCD2.9L ENGINES

ITEM	PART NUMBER	QTY	DESCRIPTION	REV
	1001223068	Ref	FUEL FILTER/WATER SEPARATOR INSTALLATION - DEUTZ TD2.9L4 ENGINE	C
1	0641608	2	Bolt 3/8 x 1	
3	2220816	2	Fitting, Adapter FNPTF/ORB	
4	3311605	2	Nut 3/8	
5	4711600	4	Washer 3/8	
6	8405006	4	Clamp	
7	1001154405	4 ft/ 1.22m	Hose	
9	1001222817	1	Fuel Filter Assembly (See Items 101-107 for Breakdown)	
10	1001178797	2	Fitting, 90	
11	1001226923	1	Decal - Fuel Water Separator	
	1001222817	Ref	FUEL FILTER ASSEMBLY	
101	70006403	1	T-Handle Kit (Includes O-Ring)	
102	70006404	1	Lid Kit (Includes Gasket)	
103	70006405	1	Element	
104	70006406	1	Checkball & Gasket Kit (Not Shown)	
105	70006407	1	Centrifuge and Baffle Kit (Not Shown)	
106	70006409	1	Bowl Kit (Includes Gasket, O-Ring and Drain)	
106	70006408	1	Gasket, Bowl	
107	70006410	1	Bowl Ring Kit (Includes Gasket & Hardware) (Not Shown)	

FIGURE 3-96. QUICKFIT OIL VALVE

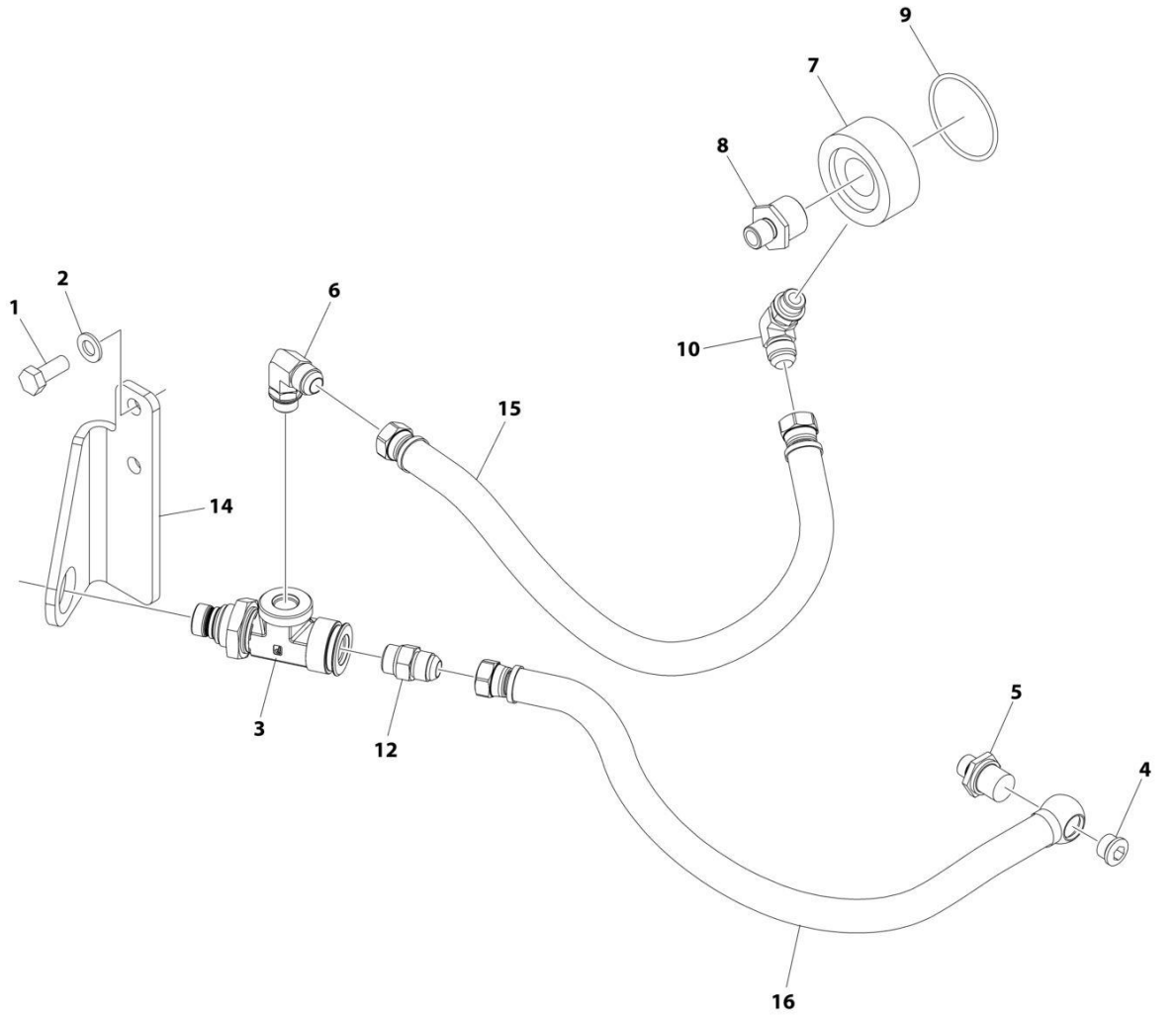

FIGURE 3-96. QUICKFIT OIL VALVE

ITEM	PART NUMBER	QTY	DESCRIPTION	REV
	1001284070	Ref	QUICKFIT OIL VALVE	A
1	0761214	2	Bolt M12 x 30	
2	4812100	2	Washer M12	
3	1001281298	1	Valve	
4	1001281304	1	Plug	
5	1001281305	1	Fitting, Banjo	
6	1001281307	1	Fitting, 90	
7	1001281309	1	Filter	
8	1001281310	1	Fitting	
9	1001281311	1	O-Ring	
10	1001281359	1	Valve, Check	
11	1001281360	1	Decal (Not Shown - Located On Frame)	
12	1001281404	1	Fitting, Adapter	
13	1001281656	AR	Tie-strap (Not Shown)	
14	1001282333	1	Bracket	
15	1001284100	1	Hose	
16	1001284101	1	Hose	

FIGURE 3-97. SPARK ARRESTING CATALYTIC MUFFLER - DEUTZ TD2011 ENGINES (OPTIONAL)

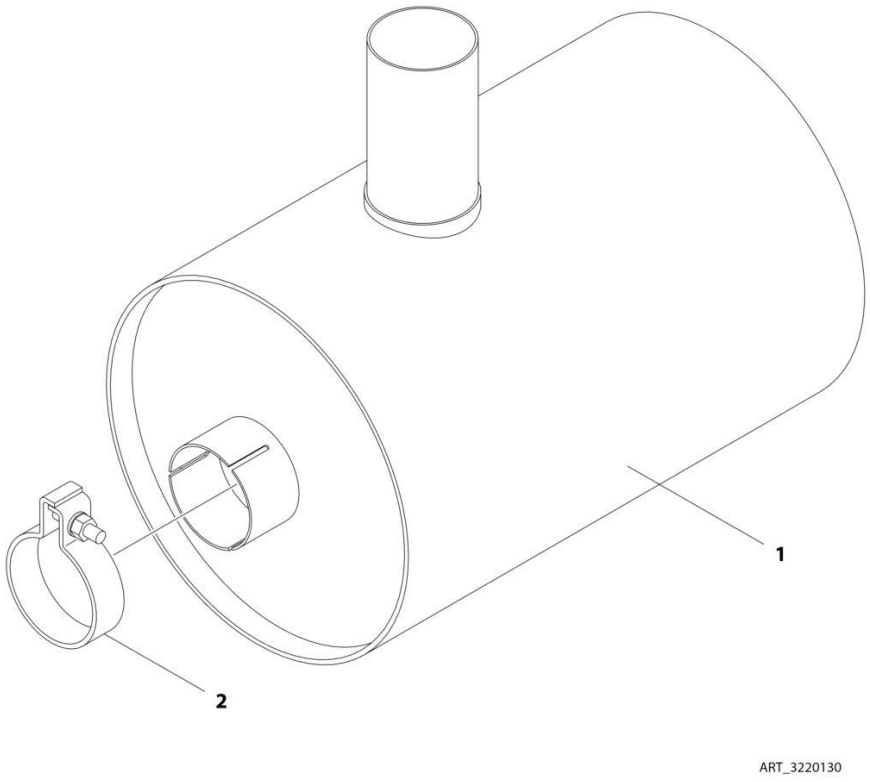

FIGURE 3-97. SPARK ARRESTING CATALYTIC MUFFLER - DEUTZ TD2011 ENGINES (OPTIONAL)

ITEM	PART NUMBER	QTY	DESCRIPTION	REV
	3220130	Ref	SPARK ARRESTING CATALYTIC MUFFLER - DEUTZ TD2011 ENGINES	A
1	See Note	NSS	Muffler (Note: Use p/n 3220130)	
2	70001017	1	Clamp	

FIGURE 3-98. SPARK ARRESTOR INSTALLATION

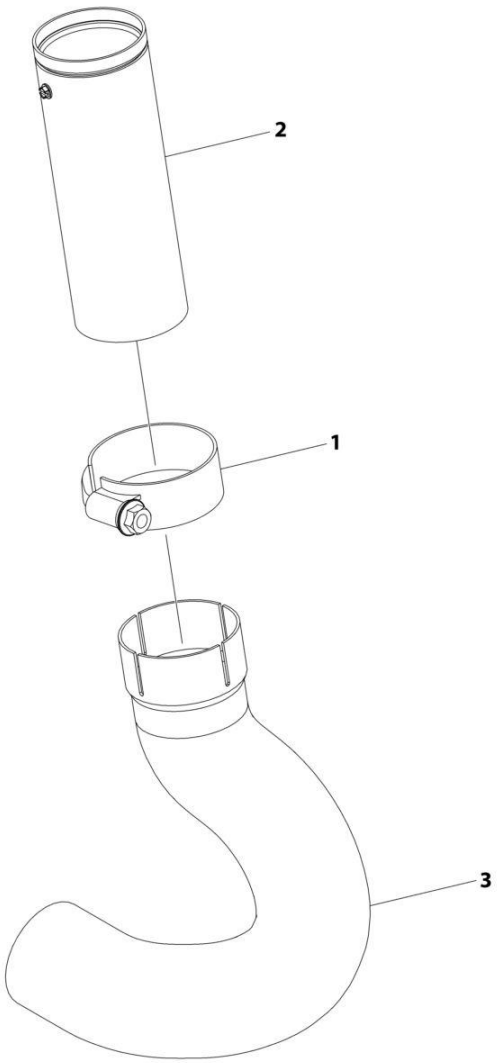

FIGURE 3-98. SPARK ARRESTOR INSTALLATION

ITEM	PART NUMBER	QTY	DESCRIPTION	REV
	1001305414	Ref	SPARK ARRESTOR INSTALLATION	A
1	1001221212	1	Clamp	
2	1001257276	1	Muffler, Spark Arresting Tip	
3	1001305410	1	Pipe, Exhaust	

FIGURE 3-99. 2500W GENERATOR INSTALLATION - 60HZ SPEC (DEUTZ TD2011 ENGINES) (OPTIONAL)

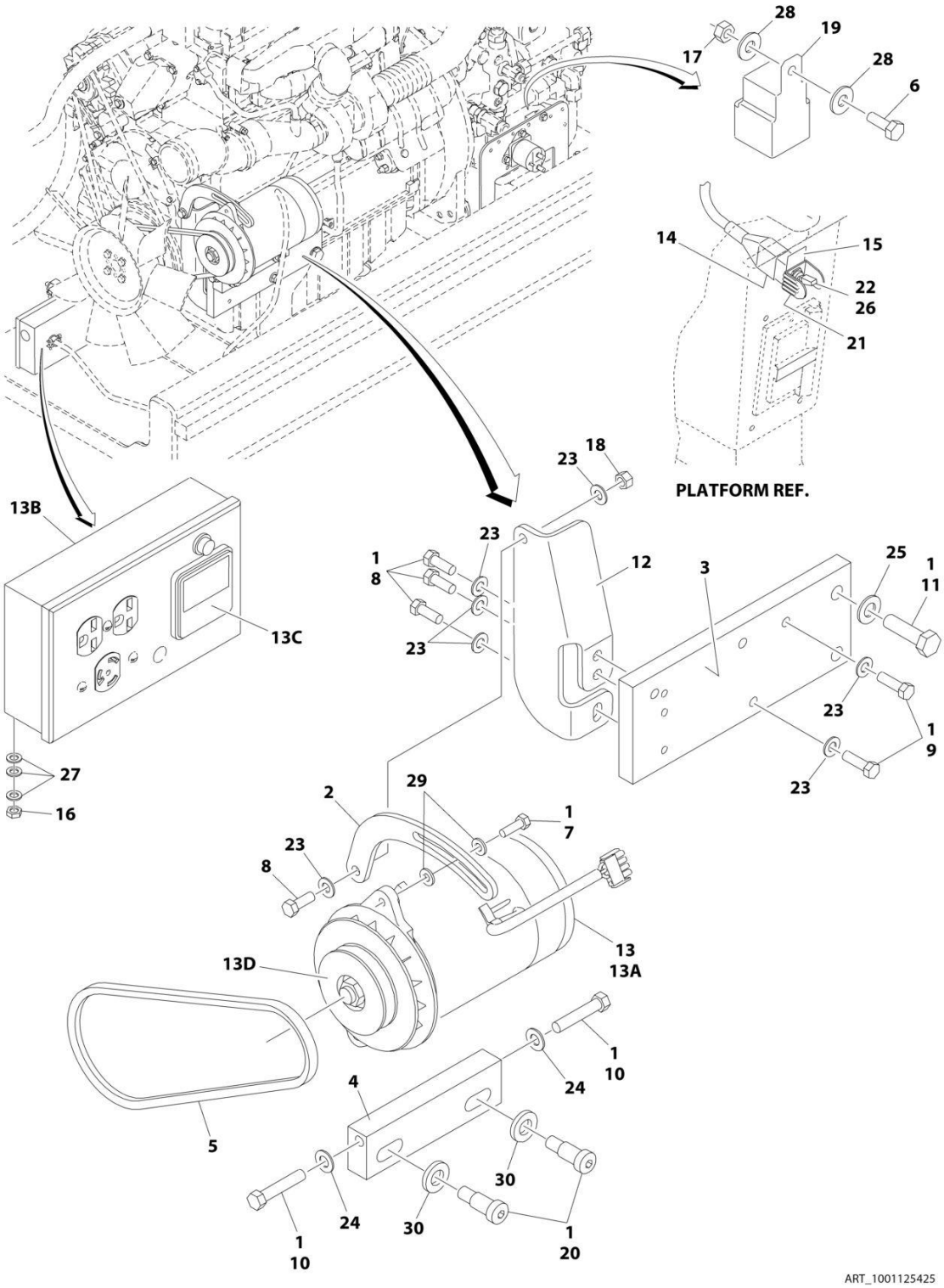

FIGURE 3-99. 2500W GENERATOR INSTALLATION - 60HZ SPEC (DEUTZ TD2011 ENGINES) (OPTIONAL)

ITEM	PART NUMBER	QTY	DESCRIPTION	REV
	1001125425	Ref	2500W GENERATOR INSTALLATION - 60HZ SPEC (DEUTZ TD2011 ENGINES)	A
1	0100011	AR	Compound, Locking	
2	0200742	1	Arm, Adjusting	
3	0363081	1	Bar, Mounting	
4	0363082	1	Bar, Adjusting	
5	0480127	1	Belt	
6	0641406	1	Bolt 1/4 x 3/4	
7	0641508	1	Bolt 5/16 x 1	
8	0641608	4	Bolt 3/8 x 1	
9	0641610	2	Bolt 3/8 x 1-1/4	
10	0641718	2	Bolt 7/16 x 2-1/14	
11	0701418	2	Bolt M14 x 50	
12	0902813	1	Bracket, Arm Mounting	
13	2460055	1	Generator, 110V/60Hz	
13A	7012558	1	Generator 110V/60Hz	
		Ref	Note: Replacement generators come standard with p/n 3580134 pulley. This pulley may not be correct for all applications. Refer to pulley options below for correct pulley.	
13A	7012513	4	Cap, Brush Holder	
13A	7020108	4	Brush	
13A	7020109	4	Holder, Brush	
13A	7012514	1	Fan	
13A	7020190	2	Bearing	
13A	7020110	1	End Bell, Front	
13A	7020111	1	End Bell, Rear	
13B	7019680	1	Box Control	
13B	4360542	1	Breaker, Circuit	
13B	4460190	AR	Receptacle, Double (110V)	
13B	4460027	AR	Receptacle, Double Twist Lock (110V)	
13B	70000124	1	Receptacle, Double (220V)	
13B	70000125	1	Receptacle, Single Twist Lock (220V)	
13C	2420203	1	Voltmeter	
13D	3580276	1	Pulley	
13D	7027887	1	Key, Woodruff	
14	2820031	AR	Heat Shrink	
15	3251102	1	Nameplate - Generator	
16	3311005	2	Nut #10	
17	3311405	1	Nut 1/4	
18	3311605	1	Nut 3/8	
19	3740080	1	Relay	
20	3900322	2	Screw, Socket Head Shoulder	
21	4060802	1	Guard, Switch	
22	4360336	1	Switch, Toggle	
23	4711600	7	Washer 3/8	
24	4711700	2	Washer 7/16	
25	4711900	2	Washer 9/16	
26	4740397	1	Spacer	
27	4751000	6	Washer #10	

ITEM	PART NUMBER	QTY	DESCRIPTION	REV
28	4751400	2	Washer 1/4	
29	4891500	2	Washer 5/16	
30	4892000	2	Washer 5/8	

FIGURE 3-100. 2500W GENERATOR INSTALLATION - 50HZ SPEC (DEUTZ TD2011 ENGINES) (OPTIONAL)

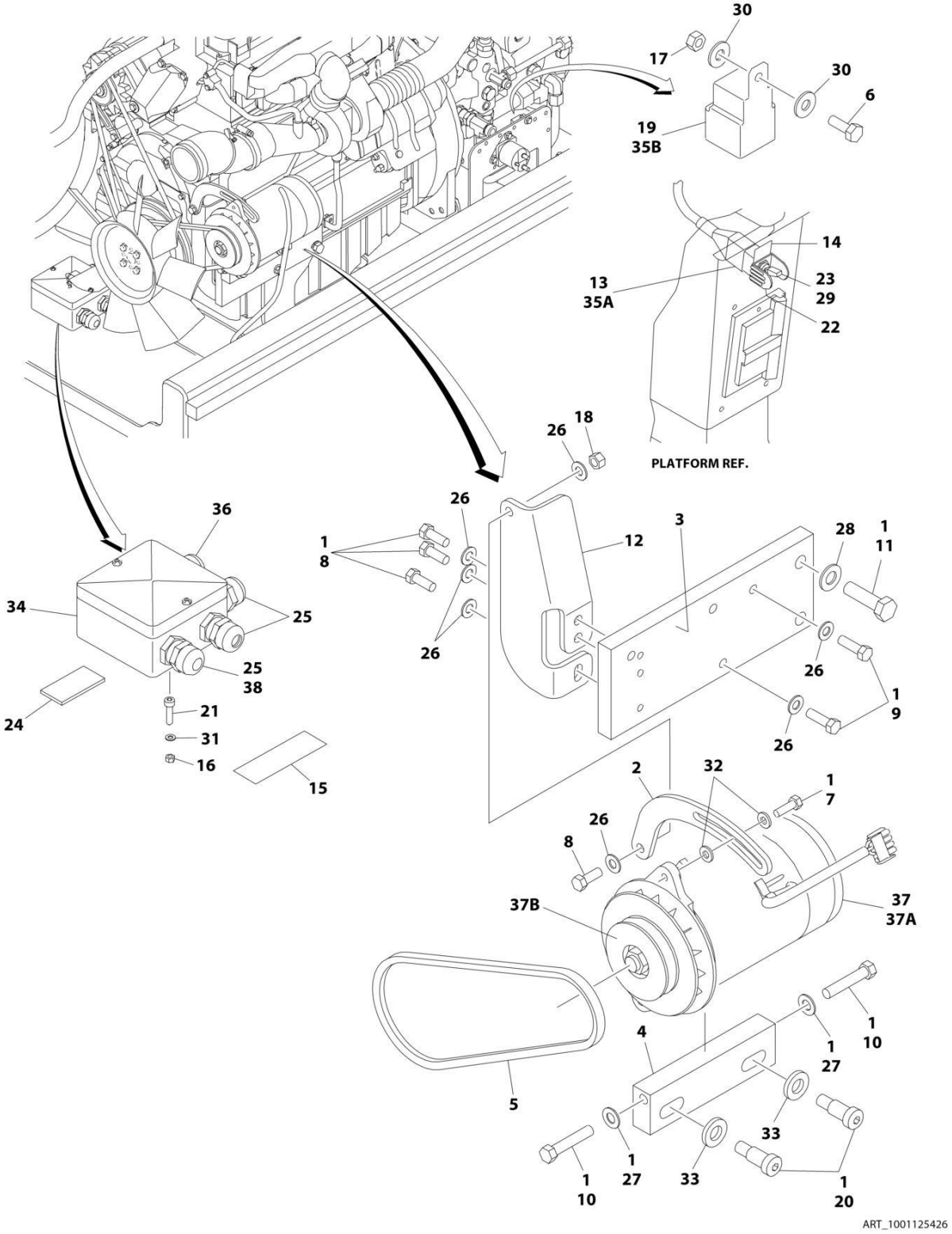

FIGURE 3-100. 2500W GENERATOR INSTALLATION - 50HZ SPEC (DEUTZ TD2011 ENGINES) (OPTIONAL)

ITEM	PART NUMBER	QTY	DESCRIPTION	REV
	1001125426	Ref	2500W GENERATOR INSTALLATION - 50HZ SPEC (DEUTZ TD2011 ENGINES)	A
1	0100011	AR	Compound, Locking	
2	0200742	1	Arm, Adjusting	
3	0363081	1	Bar, Mounting	
4	0363082	1	Bar, Adjusting	
5	0480122	1	Belt	
6	0641406	1	Bolt 1/4 x 3/4	
7	0641508	1	Bolt 5/16 x 1	
8	0641608	4	Bolt 3/8 x 1	
9	0641610	2	Bolt 3/8 x 1-1/4	
10	0641718	2	Bolt 7/16 x 2-1/4	
11	0701418	2	Bolt M14 x 50	
12	0902813	1	Bracket, Arm Mounting	
13	2820031	AR	Heat Shrink	
14	3251102	1	Nameplate - Generator	
15	3252507	1	Decal, Voltage	
16	3290505	1	Nut M5	
17	3311405	1	Nut 1/4	
18	3311605	1	Nut 3/8	
19	3740080	1	Relay	
20	3900322	2	Screw, Socket Head Shoulder	
21	4031608	1	Screw M5 x 20	
22	4060802	1	Guard, Switch	
23	4360336	1	Switch, Toggle	
24	4420060	AR	Tape, Double-Sided	
25	4460968	3	Relief, Strain	
26	4711600	7	Washer 3/8	
27	4711700	2	Washer 7/16	
28	4711900	2	Washer 9/16	
29	4740397	1	Spacer	
30	4751400	2	Washer 1/4	
31	4811600	1	Washer M5	
32	4891500	2	Washer 5/16	
33	4892000	2	Washer 5/8	
34	1001099869	1	Box, Junction	
35	1001120382	1	Wiring Diagram (Not Shown)	
35A	4922641	1	Generator ON/OFF Switch Harness	
35B	1001120378	1	Generator Harness	
36	1001100233	1	Light, Red	
37	1001100321	1	Generator Assembly	
		Ref	Note: Replacement generators come standard with p/n 3580134 pulley. This pulley may not be correct for all applications. Refer to pulley options below for correct pulley.	
37A	7012513	4	Cap, Brush Holder	
37A	7020108	4	Brush	
37A	7020109	4	Holder, Brush	
37A	7012514	1	Fan	
37A	7020190	2	Bearing	

SECTION 3 - ENGINE

ITEM	PART NUMBER	QTY	DESCRIPTION	REV
37A	7020110	1	End Bell, Front	
37A	7020111	1	End Bell, Rear	
37B	7027887	1	Key, Woodruff	
38	0962449	1	Bushing, Silicone	

FIGURE 3-101. 4000W GENERATOR INSTALLATION - 60HZ SPEC (DEUTZ TD2011 ENGINES) (OPTIONAL)

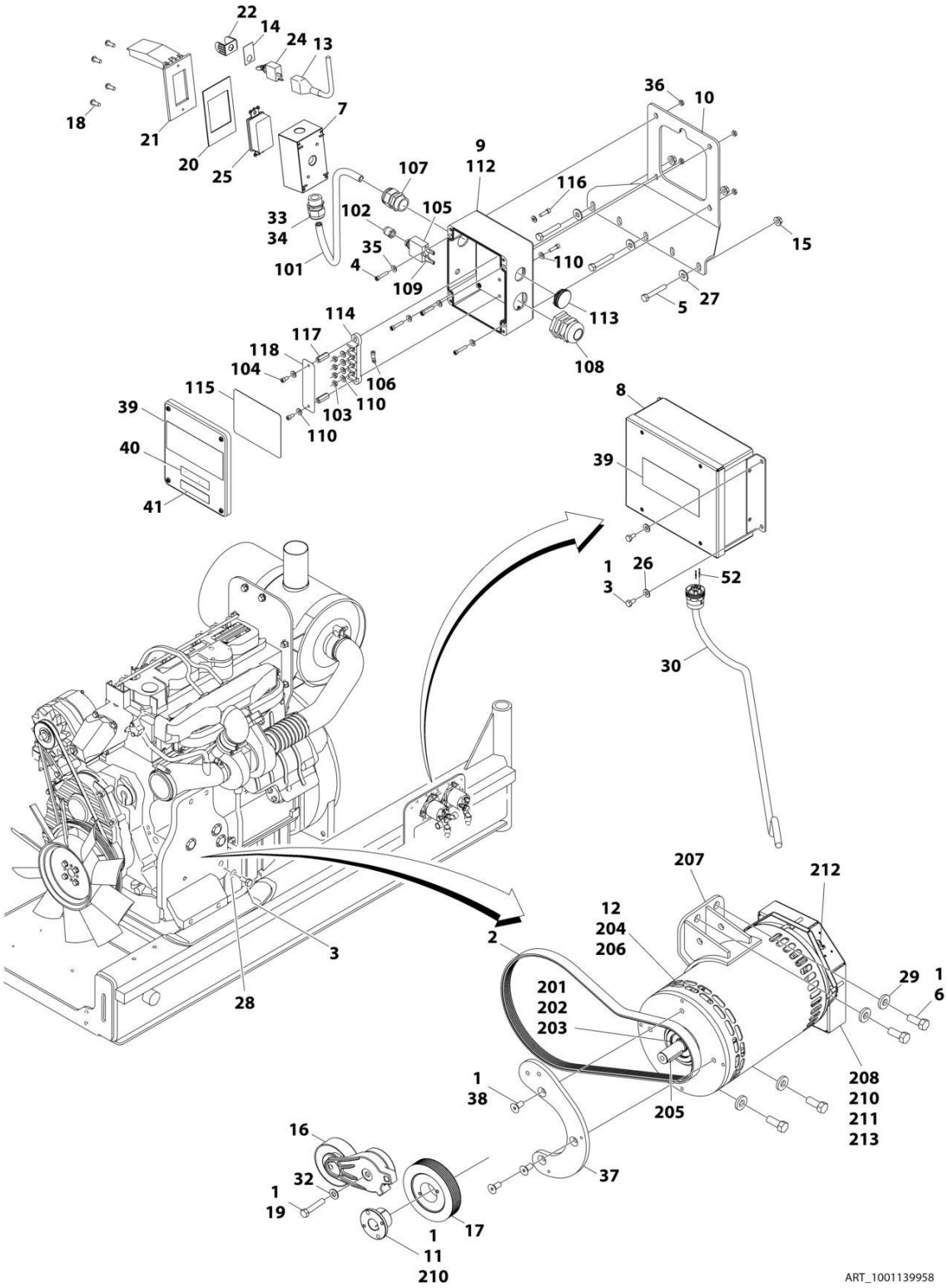

FIGURE 3-101. 4000W GENERATOR INSTALLATION - 60HZ SPEC (DEUTZ TD2011 ENGINES) (OPTIONAL)

ITEM	PART NUMBER	QTY	DESCRIPTION	REV
	1001139958	Ref	4000W GENERATOR INSTALLATION - 60HZ SPEC (DEUTZ TD2011 ENGINES)	B
		Ref	Note: See ELECTRICAL SECTION for Boom Cable Installation.	
1	0100011	AR	Compound, Locking	
2	0480128	1	Belt, Generator	
3	0641404	5	Bolt 1/4 x 1/2	
4	3931016	4	Screw 1/4 x 1	
5	0641516	3	Bolt 5/16 x 2	
6	0641810	4	Bolt 1/2 x 1-1/4	
7	0860038	1	Box, Switch-Weatherhead	
8	1001138566	1	Box, Generator Control	
8	70006552	1	Capacitor	
8	70006553	1	Relay	
9	1001152457	1	Box, Junction Assembly (See Items 101-118 for Breakdown)	
10	0902888	1	Bracket, Generator Junction Box	
11	0962520	1	Bushing, Taper	
12	1001129858	1	Generator, 4000W Assembly (See Items 200-213 for Breakdown)	
13	2820031	AR	Insulator, Heat Shrink	
14	3251102	1	Nameplate, Generator	
15	3311508	3	Nut 5/16	
16	3580317	1	Pulley, Belt Tensioner	
17	3580318	1	Pulley, Generator	
18	3910606	4	Screw 6 x 3/8	
19	0641616	AR	Bolt 3/8 x 2	
20	3960422	1	Gasket, AC Receptacle	
21	1001110873	1	Cover, Gang Vertical Receptacle GFCI	
22	4060802	1	Guard, Switch	
23	4240018	AR	Strap, Tie (Not Shown)	
24	4360336	1	Switch, Toggle	
25	4460346	1	Terminal, Receptacle	
26	4711400	4	Washer 1/4	
27	4751500	3	Washer 5/16	
28	4791400	2	Starwasher 1/4	
29	4891800	4	Washer 1/2	
30	1001152533	1	Harness, Generator Cable (See Separate Breakdown in ELECTRICAL SECTION)	
31	1001153257	1	Diagram, Generator Wiring (Not Shown)	
32	4711600	1	Washer 3/8	
33	0100020	AR	Sealant, Pipe	
34	4460071	1	Connector, Strain Relief	
35	4751000	4	Washer #10	
36	3311005	4	Nut #10	
37	1001139357	1	Mount, Generator Tensioner	
38	0741607	3	Screw 3/8 x 0.88	
39	1705387	3	Decal - Hazardous Voltage	
40	3251243	1	Decal - 120V-60Hz	
41	1705374	1	Decal - 240V-60Hz	
52	0100048	AR	Grease, Dielectric	
	1001152457	Ref	JUNCTION BOX ASSEMBLY	B

SECTION 3 - ENGINE

ITEM	PART NUMBER	QTY	DESCRIPTION	REV
101	1001179154	2.5 ft/ 0.8m	Cable, 12/3	
102	3300396	1	Cover, Fuse	
103	3311001	4	Nut #10 Grade 2	
104	3900300	2	Screw, Spec, Cap	
105	4360070	1	Circuit Breaker, 15Amp	
106	4460068	3	Terminal, Ring	
107	4460425	1	Terminal, Strain Relief	
108	4460426	1	Connector, Strain Relief	
109	4460483	2	Terminal	
110	4711000	8	Washer #10	
112	1001152456	1	Box, Junction	
113	1001152525	1	Plug, Hole Pluggit	
114	1001152530	1	Terminal, Block, 4 Pole	
115	1001153260	1	Decal - Wiring 4000W Generator	
116	3900267	2	Screw, Spec, Cap	
117	1001158008	2	Stand-Off, Female, Threaded	
118	1001158363	1	Plate, Cover, PVC	
	1001129858	Ref	4000W GENERATOR ASSEMBLY	
201	70003709	1	Ring, Retaining	
202	70003708	1	Ring, Retaining	
203	70001966	1	Bearing, Ball	
204	70004092	1	Endbell	
205	70004171	1	Key	
206	70004676	1	Rotor Assembly	
207	70004684	1	Stator, Generator 4000W	
208	70004678	1	Endbell	
210	70004680	1	Enclosure	
211	70004685	1	Cover, Enclosure	
212	70004682	1	Protector, Supplementary, Manual Reset	
213	70004098	1	Bushing, Strain Relief	

FIGURE 3-102. 4000W GENERATOR INSTALLATION - 50HZ SPEC (DEUTZ TD2011 ENGINES) (OPTIONAL)

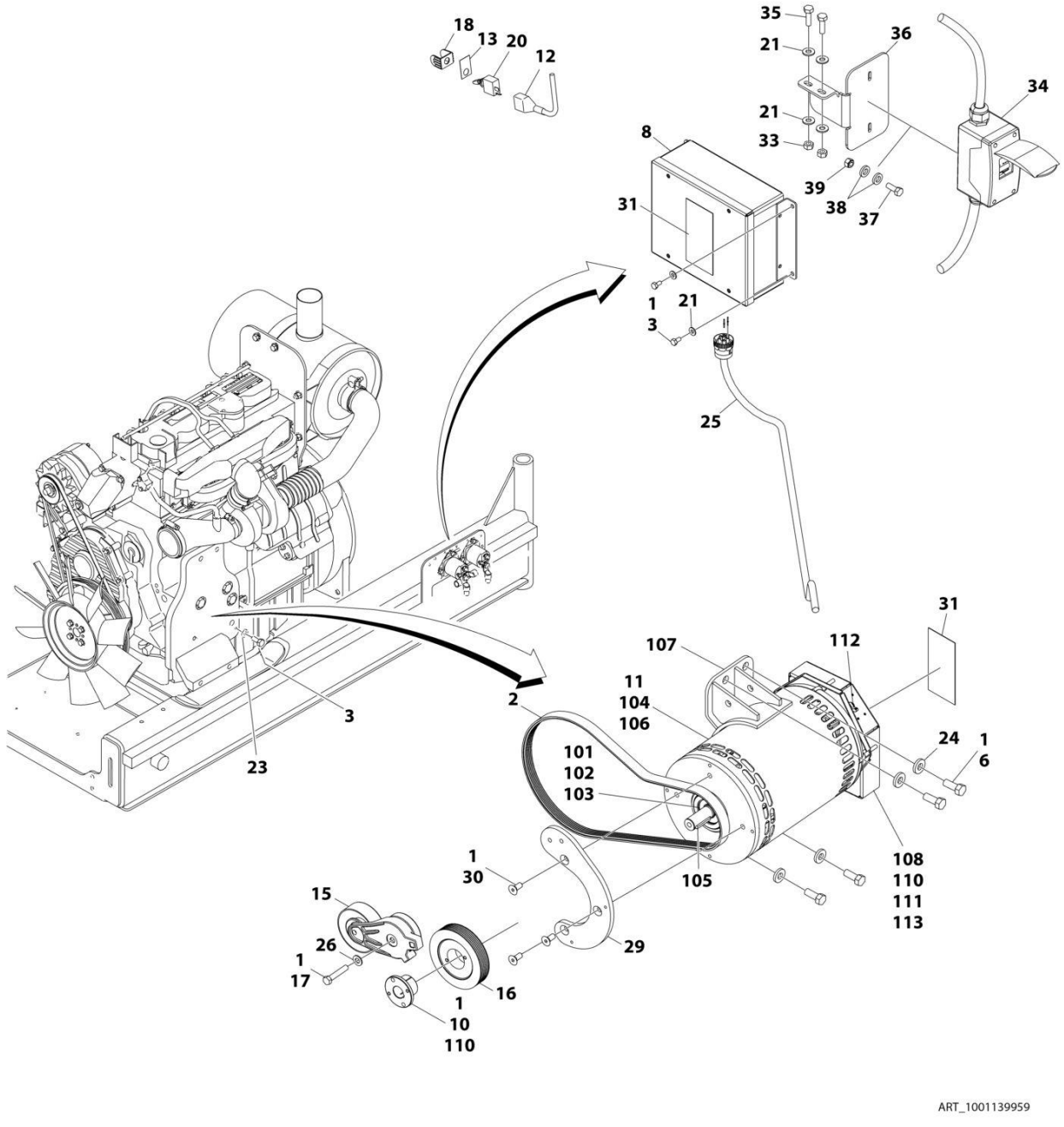

FIGURE 3-102. 4000W GENERATOR INSTALLATION - 50HZ SPEC (DEUTZ TD2011 ENGINES) (OPTIONAL)

ITEM	PART NUMBER	QTY	DESCRIPTION	REV
	1001139959	Ref	4000W GENERATOR INSTALLATION - 50HZ SPEC (DEUTZ TD2011 ENGINES)	D
		Ref	Note: See ELECTRICAL SECTION for Boom Cable Installation.	
1	0100011	AR	Compound, Locking	
2	1001136356	1	Belt, Generator	
3	0641404	5	Bolt 1/4 x 1/2	
6	0641810	4	Bolt 1/2 x 1-1/4	
8	1001138566	1	Box, Generator Control	
8	70006552	1	Capacitor	
8	70006553	1	Relay	
10	0962520	1	Bushing, Taper	
11	1001138565	1	Generator, 4000W Assembly Options: (See items 101-113 for Breakdown)	
12	2820031	AR	Insulator, Heat Shrink	
13	3251102	1	Nameplate, Generator	
15	3580317	1	Pulley, Belt Tensioner	
16	3580319	1	Pulley, Generator	
17	0641616	1	Bolt 3/8 x 2	
18	4060802	1	Guard, Switch	
19	4240018	AR	Strap, Tie (Not Shown)	
20	4360336	1	Switch, Toggle	
21	4711400	8	Washer 1/4	
23	4791400	2	Washer 1/4	
24	4891800	4	Washer 1/2	
25	1001152533	1	Harness, Generator Cable (See Separate Breakdown in ELECTRICAL SECTION)	
26	4711600	1	Washer 3/8	
29	1001139357	1	Mount, Generator Tensioner	
30	0741607	3	Screw, Flat head, 3/8 x .88	
31	1705489	AR	Decal - Hazardous Voltage	
33	3311405	2	Nut 1/4	
34	1001165368	1	Kit, Box and Breaker (See Separate Breakdown in ELECTRICAL SECTION)	
35	0641407	2	Bolt 1/4 x 7/8	
36	1001094915	1	Bracket, AC Breaker Box	
37	4010408	2	Screw M4 x 16	
38	1001091102	4	Washer M4	
39	3290405	2	Nut M4	
	1001138565	Ref	4000W GENERATOR ASSEMBLY	
101	70003709	1	Ring, Retaining	
102	70003708	1	Ring, Retaining	
103	70001966	1	Bearing, Ball	
104	70004092	1	Endbell	
105	70004171	1	Key	
106	70004676	1	Rotor Assembly	
107	70004677	1	Stator, Generator 4000W	
108	70004678	1	Endbell	
110	70004680	1	Enclosure	
111	70004681	1	Cover, Enclosure	
112	70004682	1	Protector, Supplementary, Manual Reset	

ITEM	PART NUMBER	QTY	DESCRIPTION	REV
113	70004683	1	Bushing, Strain Relief	

FIGURE 3-103. 4000W GENERATOR INSTALLATION - 60HZ SPEC (DEUTZ TCD2.9L4 ENGINES) (OPTIONAL)

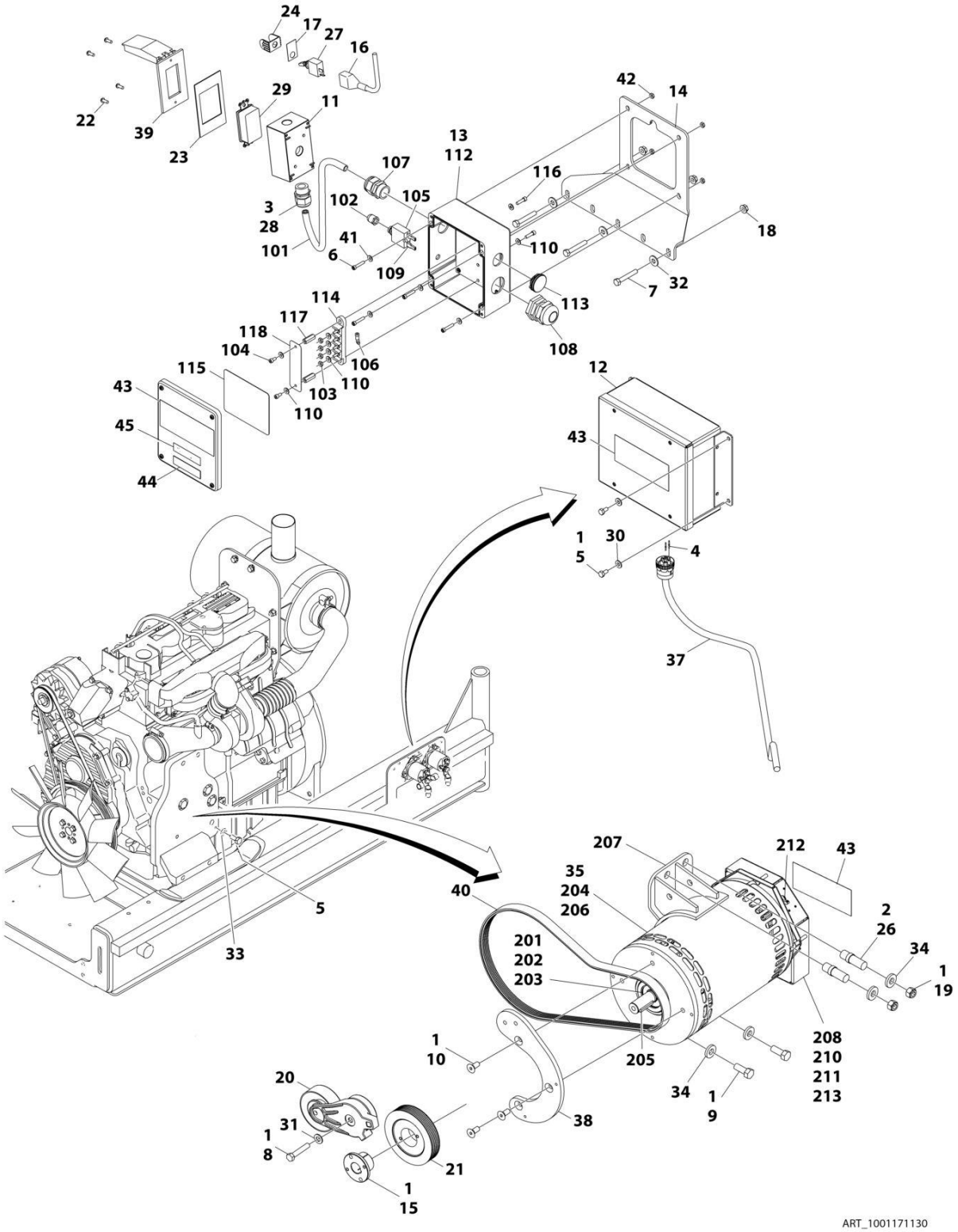

FIGURE 3-103. 4000W GENERATOR INSTALLATION - 60HZ SPEC (DEUTZ TCD2.9L4 ENGINES) (OPTIONAL)

ITEM	PART NUMBER	QTY	DESCRIPTION	REV
	1001171130	Ref	4000W GENERATOR INSTALLATION - 60HZ SPEC (DEUTZ TCD2.9L4 ENGINES)	B
		Ref	Note: See ELECTRICAL SECTION for Boom Cable Installation.	
1	0100011	AR	Compound, Locking	
2	0100019	AR	Compound, Locking	
3	0100020	AR	Sealant, Pipe	
4	0100048	AR	Grease, Dielectric	
5	0641404	5	Bolt 1/4 x 1/2	
6	3931016	4	Screw 1/4 x 1	
7	0641516	3	Bolt 5/16 x 2	
8	0641618	1	Bolt 3/8 x 2-1/4	
9	0641810	2	Bolt 1/2 x 1-1/4	
10	0741607	3	Screw 3/8 x 0.88	
11	0860038	1	Box, Switch-Weatherhead	
12	1001138566	1	Box, Generator Control	
12	70006552	1	Capacitor	
12	70006553	1	Relay	
13	1001152457	1	Box, Junction Assembly (See Items 101-118 for Breakdown)	
14	0902888	1	Bracket, Generator Junction Box	
15	0962520	1	Bushing, Taper	
16	2820031	AR	Insulator, Heat Shrink	
17	3251102	1	Nameplate, Generator	
18	3311508	3	Nut 5/16	
19	3311801	2	Nut 1/2	
20	3580317	1	Pulley, Belt Tensioner	
21	3580318	1	Pulley, Generator	
22	3910606	4	Screw 6 x 3/8	
23	3960422	1	Gasket, AC Receptacle	
24	4060802	1	Guard, Switch	
25	4240018	AR	Strap, Tie (Not Shown)	
26	4300157	2	Stud	
27	4360336	1	Switch, Toggle	
28	4460071	1	Connector, Strain Relief	
29	4460346	1	Terminal, Receptacle	
30	4711400	4	Washer 1/4	
31	4711600	1	Washer 3/8	
32	4751500	3	Washer 5/16	
33	4791400	2	Starwasher 1/4	
34	4891800	4	Washer 1/2	
35	1001140344	1	Generator, 4000W Assembly (See Items 200-213 for Breakdown)	
36	1001153257	1	Diagram, Generator Wiring (Not Shown)	
37	1001152533	1	Harness, Generator Cable (See Separate Breakdown in ELECTRICAL SECTION)	
38	1001138011	1	Mount, Generator Tensioner	
39	1001110873	1	Cover, Gang Vertical Receptacle GFCI	
40	1001142645	1	Belt, Generator	
41	4751000	4	Washer #10	
42	3311005	4	Nut 10	
43	1705387	3	Decal - Hazardous Voltage	

SECTION 3 - ENGINE

ITEM	PART NUMBER	QTY	DESCRIPTION	REV
44	1705374	1	Decal - 240V-60Hz	
45	3251243	1	Decal - 120V-60Hz	
	1001152457	Ref	JUNCTION BOX ASSEMBLY	B
101	1001179154	2.5 ft/ 0.8m	Cable, Electrical 12/3	
102	3300396	1	Cover, Fuse	
103	3311001	4	Nut 10 Grade 2	
104	3900300	2	Screw, Spec, Cap	
105	4360070	1	Circuit Breaker, 15Amp	
106	4460068	3	Terminal, Ring	
107	4460425	1	Terminal, Strain Relief	
108	4460426	1	Connector, Strain Relief	
109	4460483	2	Terminal	
110	4711000	AR	Washer #10	
112	1001152456	1	Box, Junction	
113	1001152525	1	Plug, Hole Pluggit	
114	1001152530	1	Terminal, Block, 4 Pole	
115	1001153260	1	Decal - Wiring 4000W Generator	
116	3900267	2	Screw, Spec, Cap	
117	1001158008	2	Stand-Off, Female, Threaded	
118	1001158363	1	Plate, Cover, PVC	
	1001140346	Ref	4000W GENERATOR ASSEMBLY	
201	70003709	1	Ring, Retaining	
202	70003708	1	Ring, Retaining	
203	70001966	1	Bearing, Ball	
204	70004092	1	Endbell	
205	70004099	1	Key	
206	70004676	1	Rotor Assembly	
207	70004687	1	Stator, Generator 4000W	
208	70004678	1	Endbell	
210	70004680	1	Enclosure	
211	70004685	1	Cover, Enclosure	
212	70004682	1	Protector, Supplementary, Manual Reset	
213	70004098	1	Bushing, Strain Relief	

FIGURE 3-104. 4000W GENERATOR INSTALLATION - 50HZ SPEC (DEUTZ TCD2.9L4 ENGINES AND DEUTZ TCD2.9L4 (STAGE V) ENGINES) (OPTIONAL)

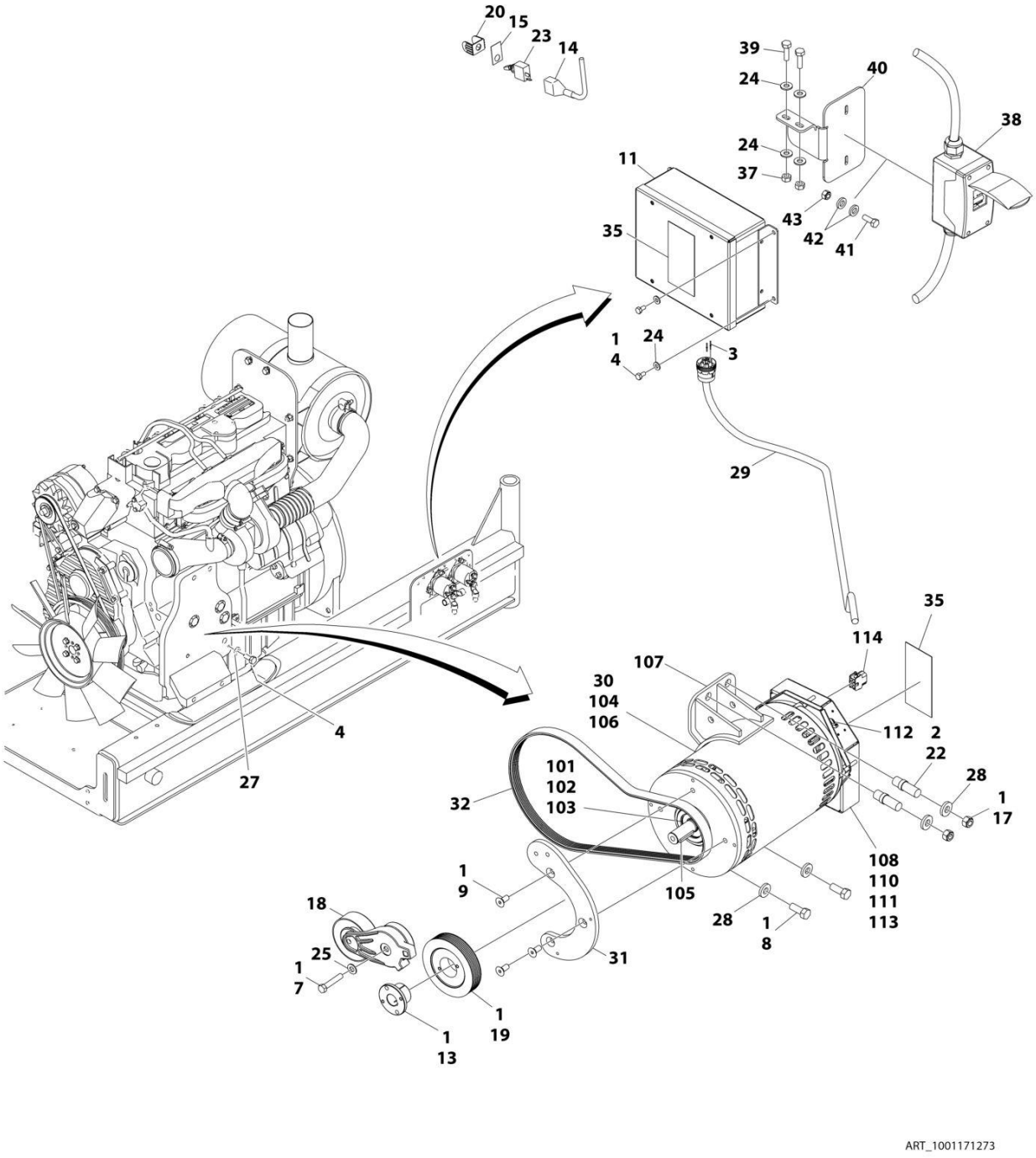

FIGURE 3-104. 4000W GENERATOR INSTALLATION - 50HZ SPEC (DEUTZ TCD2.9L4 ENGINES AND DEUTZ TCD2.9L4 (STAGE V) ENGINES) (OPTIONAL)

ITEM	PART NUMBER	QTY	DESCRIPTION	REV
	1001171273	Ref	4000W GENERATOR INSTALLATION - 50HZ SPEC (DEUTZ TCD2.9L4 ENGINES	C
		Ref	Note: See ELECTRICAL SECTION for Boom Cable Installation.	
1	0100011	AR	Compound, Locking	
2	0100019	AR	Compound, Locking	
3	0100048	AR	Grease, Dielectric	
4	0641404	5	Bolt 1/4 x 1/2	
7	0641618	1	Bolt 3/8 x 2-1/4	
8	0641810	2	Bolt 1/2 x 1-1/4	
9	0741607	3	Screw 3/8 x 0.88	
11	1001138566	1	Box, Generator Control	
11	70006552	1	Capacitor	
11	70006553	1	Relay	
13	0962520	1	Bushing, Taper	
14	2820031	AR	Insulator, Heat Shrink	
15	3251102	1	Nameplate, Generator	
17	3311801	2	Nut 1/2	
18	3580317	1	Pulley, Belt Tensioner	
19	3580319	1	Pulley, Generator	
20	4060802	1	Guard, Switch	
21	4240018	AR	Strap, Tie (Not Shown)	
22	4300157	2	Stud	
23	4360336	1	Switch, Toggle	
24	4711400	8	Washer 1/4	
25	4711600	1	Washer 3/8	
27	4791400	2	Starwasher 1/4	
28	4891800	4	Washer 1/2	
29	1001152533	1	Harness, Generator Cable (See Separate Breakdown in ELECTRICAL Section)	
30	1001140347	1	Generator, 4000W Assembly (See Items 101-114 for Breakdown)	
31	1001138011	1	Mount, Generator Tensioner	
32	1001136357	1	Belt, Generator	
35	1705489	AR	Decal - Hazardous Voltage	
37	3311405	2	Nut 1/4	
38	1001165368	1	Kit, Box and Breaker (See Separate Breakdown in ELECTRICAL Section)	
39	0641407	2	Bolt 1/4 x 7/8	
40	1001094915	1	Bracket	
41	4010408	2	Screw M4 x 16	
42	1001091102	4	Washer M4	
43	3290405	2	Nut M4	
	1001140347	Ref	4000W GENERATOR ASSEMBLY	
101	70003709	1	Ring, Retaining	
102	70003708	1	Ring, Retaining	
103	70001966	1	Bearing, Ball	
104	70004092	1	Endbell	
105	70004099	1	Key	
106	70004676	1	Rotor Assembly	
107	70004686	1	Stator, Generator 4000W	

SECTION 3 - ENGINE

ITEM	PART NUMBER	QTY	DESCRIPTION	REV
108	70004678	1	Endbell	
110	70004680	1	Enclosure	
111	70004681	1	Cover, Enclosure	
112	70004682	1	Protector, Supplementary, Manual Reset	
113	70004683	1	Bushing, Strain Relief	
114	4460224	1	Connector - 6 Position (50Hz) (Located on Enclosure Cover)	
114	4460294	2	Pin, Male (50Hz) (Located on Enclosure Cover)	

FIGURE 3-105. 7500W SKYPOWER GENERATOR INSTALLATION - 60HZ SPEC (DEUTZ TD2011 ENGINES) (OPTIONAL)

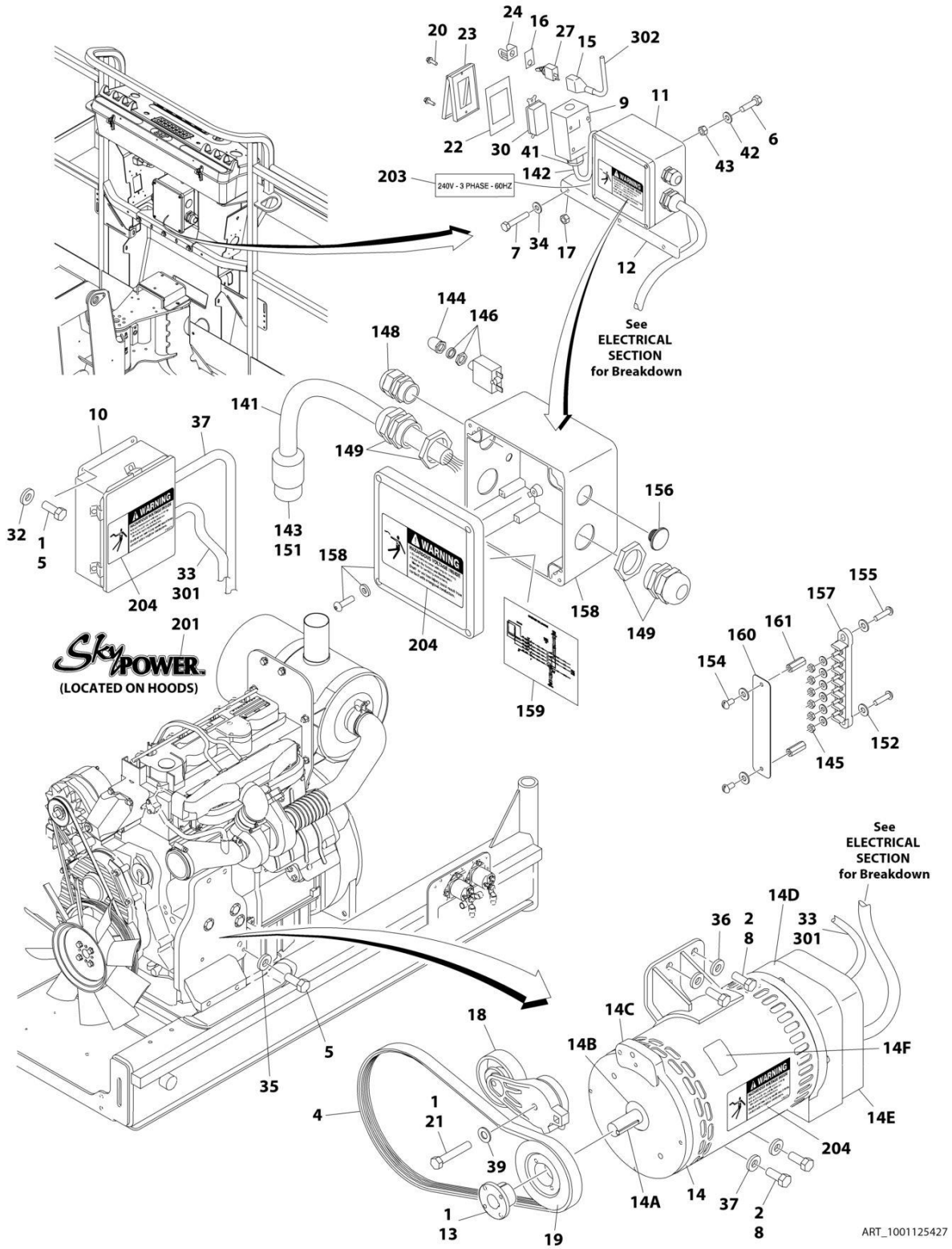

FIGURE 3-105. 7500W SKYPOWER GENERATOR INSTALLATION - 60HZ SPEC (DEUTZ TD2011 ENGINES) (OPTIONAL)

ITEM	PART NUMBER	QTY	DESCRIPTION	REV
	1001125427	Ref	7500W SKYPOWER GENERATOR INSTALLATION - 60HZ SPEC (DEUTZ TD2011 ENGINES)	D
		Ref	Note: See ELECTRICAL SECTION for Boom Cable Installation.	
1	0100011	AR	Compound, Locking	
2	0100019	AR	Compound, Locking	
4	0480128	1	Belt, Generator	
5	0641404	6	Bolt 1/4 x 1/2	
6	3931016	AR	Bolt 10 x 1	
7	0641516	3	Bolt 5/16 x 2	
8	0641810	4	Bolt 1/2 x 1-1/4	
9	0860038	1	Box, Switch	
10	0861538	1	Box, Generator Control	
10	7024488	1	Card, Circuit - Generator Power (Not Shown)	
10	See Note	1	Fuse (Note: Not Available - Purchase Locally)	
10	7024489	1	Card, Circuit - Control (Not Shown)	
		Ref	Note: When replacing card, rocker switch on card must be set for required application.	
10	70000619	1	Harness, Circuit Card	
11	1001157592	1	Junction Box Assembly Options (See Items 141-161 for Breakdown)	
12	0902888	1	Bracket, Generator Junction Box	
13	0962520	1	Bushing, Taper	
14	2460048	1	Generator, 7500W	
14	70001100	1	Rotor (Includes p/n 70001384 & 70000863) (Not Shown)	
14	70001384	1	Bearing, Shaft (Rear) (Not Shown)	
14	70000863	1	Fan, Generator (Not Shown)	
14	70002088	1	Stator (Not Shown)	
14	70002297	2	Stud 1/4 x 12-7/8 (Not Shown)	
14	70003631	1	Brushholder Assembly (Not Shown) (was p/n 7024484)	
14A	70004171	1	Key	
14B	70001966	1	Bearing, Ball Radial (Located in Belt Tensioner Endbell)	
14B	70003709	1	Ring, Retaining (Small)	
14B	70003708	1	Ring, Retaining (Large)	
14C	70001953	1	Endbell, Belt Tensioner	
14D	70004169	1	Kit, Endbell (Includes Endbell, Brush Block and Shroud Assembly)	
14E	7027799	1	Block, Connector 6 Position (Not Shown)	
14E	70002460	6	Nut, Brass (Attaches p/n 7027799 to Cover) (Not Shown)	
14E	7024485	1	Breaker, Circuit 30Amp (Not Shown)	
14E	70001696	1	Boot, Breaker (Not Shown)	
14E	7026597	1	Connector with Leads (Not Shown)	
14E	7026626	1	Connector with Pins (Not Shown)	
14E	7026188	1	Clamp, Cable (Not Shown)	
14E	70002255	1	Plate, End Panel (Not Shown)	
14E	See Note	NSS	Insulator, End Panel (Note: Not Available for Purchase)	
14E	70001974	1	Decal - Terminal Connections (Not Shown)	
14F	70001973	1	Decal - Warning Moving Parts	
15	2820031	AR	Insulator, Heat Shrink	
16	3251102	1	Nameplate, Generator	
17	3311508	3	Nut 5/16	

ITEM	PART NUMBER	QTY	DESCRIPTION	REV
18	3580317	1	Pulley, Belt Tensioner	
19	3580318	1	Pulley, Generator	
20	3910606	4	Screw #6 x 3/8	
21	0641618	1	Bolt 3/8 x 2	
22	3960422	1	Gasket, AC Receptacle	
23	1001110873	1	Shield, Receptacle Cover	
24	4060802	1	Guard, Switch	
26	4240018	AR	Strap, Tie (Not Shown)	
27	4360336	1	Switch, Toggle	
30	4460346	1	Terminal, Receptacle	
32	4711400	4	Washer 1/4	
33	0100048	AR	Grease, Dielectric	
34	4751500	3	Washer 5/16	
35	4791400	2	Starwasher 1/4	
36	4891800	4	Washer 1/2	
37	4922972	1	Harness, Generator Cable (See Separate Breakdown in ELECTRICAL SECTION)	
39	4711600	1	Washer 3/8	
40	0100020	AR	Sealant, Pipe (Not Shown)	
41	4460071	1	Connector, Strain Relief	
42	4751000	4	Washer #10	
43	3311005	4	Nut #10	
	1001157592	Ref	JUNCTION BOX ASSEMBLY	C
141	1060343	1.5 ft/ 0.5m	Cable, Electrical 10/4	
142	1001179154	2.5 ft/ 0.8m	Cable, 12/3	
143	1671092	1	Cover	
144	3300396	1	Cover, Fuse	
145	3311001	6	Nut #10	
146	4360070	1	Circuit Breaker - 15Amp	
148	4460425	1	Strain Relief, Terminal	
149	4460426	2	Connector, Strain Relief	
151	4460963	1	Connector	
152	4711000	10	Washer #10	
154	10702077	2	Screw #10 x 3/8	
155	10702082	2	Screw #10 x 3/4	
156	1001152525	1	Plug	
157	1001157520	1	Block, Terminal	
158	1001157521	1	Box, Junction	
159	1001157528	1	Decal - Wiring Schematic	
160	1001158007	1	Decal - PVC	
161	1001158008	2	Stand-Off	
	0272435	Ref	DECAL INSTALLATION	D
201	1705460	2	Decal - SkyPower	
202	3251243	1	Decal - 120V - 60Hz (Located at Platform Receptacle)	
203	1705375	1	Decal - 240V - 3 Phase	
204	1705387	3	Decal - Hazardous Voltage	
	1001122528	Ref	ELECTRICAL DIAGRAM COMPONENTS	B
301	1001119968	1	Generator Harness	B
301A	4460967	1	Plug, Male - 3 Position (Not Shown)	
301A	4460465	6	Socket, Female	

ITEM	PART NUMBER	QTY	DESCRIPTION	REV
301B	1001117078	1	Fuseholder with Fuse (Not Shown)	
302	4922641	1	Switch, Harness	

FIGURE 3-106. 7500W SKYPOWER GENERATOR INSTALLATION - 50HZ SPEC (DEUTZ TD2011 ENGINES) (OPTIONAL)

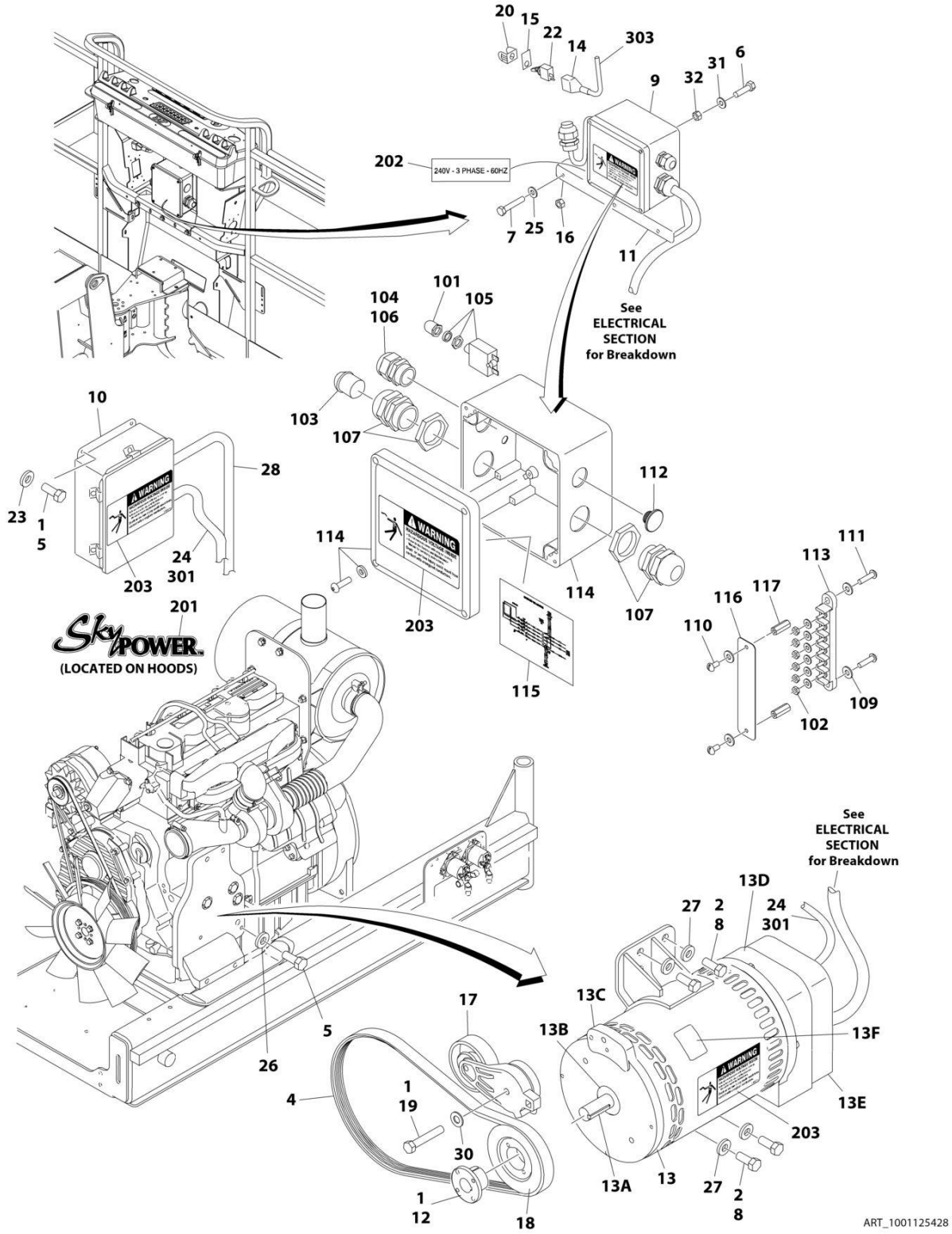

FIGURE 3-106. 7500W SKYPOWER GENERATOR INSTALLATION - 50HZ SPEC (DEUTZ TD2011 ENGINES) (OPTIONAL)

ITEM	PART NUMBER	QTY	DESCRIPTION	REV
	1001125428	Ref	7500W SKYPOWER GENERATOR INSTALLATION - 50HZ SPEC (DEUTZ TD2011 ENGINES)	C
		Ref	Note: See ELECTRICAL SECTION for Boom Cable Installation.	
1	0100011	AR	Compound, Locking	
2	0100019	AR	Compound, Locking	
4	0480129	1	Belt, Generator	
5	0641404	5	Bolt 1/4 x 1/2	
6	3931016	4	Bolt 10 x 1	
7	0641516	3	Bolt 5/16 x 2	
8	0641810	4	Bolt 1/2 x 1-1/4	
9	1001157525	1	Junction Box Assembly (See Items 101-117 for Breakdown)	
10	0861572	1	Box, Generator Control	
10	7024488	1	Card, Circuit - Generator Power (Not Shown)	
10	See Note	1	Fuse (Note: Not Available - Purchase Locally)	
10	7024489	1	Card, Circuit - Control (Not Shown)	
		Ref	Note: When replacing card, rocker switch on card must be set for required application.	
10	70000619	1	Harness, Circuit Card	
11	0902888	1	Bracket, Generator Junction Box	
12	0962520	1	Bushing, Taper	
13	2460048	1	Generator, 7500W	
13	70001100	1	Rotor (Includes p/n 70001384 & 70000863) (Not Shown)	
13	70001384	1	Bearing, Shaft (Rear) (Not Shown)	
13	70000863	1	Fan, Generator (Not Shown)	
13	70002088	1	Stator (Not Shown)	
13	70002297	2	Stud 1/4 x 12-7/8	
13	70003631	1	Brushholder Assembly (Not Shown)	
13A	70004171	1	Key	
13B	70001966	1	Bearing, Ball Radial (Located in Belt Tensioner Endbell)	
13B	70003709	1	Ring, Retaining (Small)	
13B	70003708	1	Ring, Retaining (Large)	
13C	70001953	1	Endbell, Belt Tensioner	
13D	70004169	1	Kit, Endbell (Includes Endbell, Brush Block and Shroud Assembly)	
13E	7027799	1	Block, Connector 6 Position (Not Shown)	
13E	70002460	6	Nut, Brass (Attaches p/n 7027799 to Cover) (Not Shown)	
13E	7024485	1	Breaker, Circuit 30Amp (Not Shown)	
13E	70001696	1	Boot, Breaker (Not Shown)	
13E	7026597	1	Connector with Lead (Not Shown)	
13E	7026626	1	Connector with Pins (Not Shown)	
13E	7026188	1	Clamp, Cable (Not Shown)	
13E	70002255	1	Plate, End Panel (Not Shown)	
13E	See Note	1	Insulator, End Panel (Not Shown) (Note: Not Available for Purchase)	
13E	70001974	1	Decal - Terminal Connections (Not Shown)	
13F	70001973	1	Decal - Warning Moving Parts	
14	2820031	AR	Insulator, Heat Shrink	
15	3251102	1	Nameplate, Generator	
16	3311508	3	Nut 5/16	
17	3580317	1	Pulley, Belt Tensioner	

SECTION 3 - ENGINE

ITEM	PART NUMBER	QTY	DESCRIPTION	REV
18	3580319	1	Pulley, Generator	
19	0641618	1	Bolt 3/8 x 2	
20	4060802	1	Guard, Switch	
21	4240018	AR	Strap, Tie (Not Shown)	
22	4360336	1	Switch, Toggle	
23	4711400	4	Washer 1/4	
24	0100048	AR	Grease, Dielectric	
25	4751500	3	Washer 5/16	
26	4791400	2	Starwasher 1/4	
27	4891800	4	Washer 1/2	
28	4922972	1	Harness, Generator Cable (See Separate Breakdown in ELECTRICAL SECTION)	
30	4711600	1	Washer 3/8	
31	4751000	4	Washer #10	
32	3311005	4	Nut #10	
	1001157525	Ref	JUNCTION BOX ASSEMBLY	B
101	3300396	1	Cover, Fuse	
102	3311001	6	Nut #10	
103	3520189	1	Plug	
104	3520192	1	Plug	
105	4360070	1	Circuit Breaker - 15Amp	
106	4460425	1	Strain Relief, Terminal	
107	4460426	2	Connector, Strain Relief	
109	4711000	10	Washer #10	
110	10702077	2	Screw #10 x 3/8	
111	10702082	2	Screw #10 x 3/4	
112	1001152525	1	Plug	
113	1001157520	1	Block, Terminal	
114	1001157521	1	Box, Junction	
115	1001157528	1	Decal - Wiring Schematic	
116	1001158007	1	Cover, PVC	
117	1001158008	2	Stand-Off	
	0272589	Ref	DECAL INSTALLATION	A
201	1705460	2	Decal - SkyPower	
202	1705461	1	Decal - 240V - 3 Phase	
203	1705489	3	Decal - Hazardous Voltage	
	1001122528	Ref	ELECTRICAL DIAGRAM COMPONENTS	B
301	1001119968	1	Generator Harness	B
301A	4460967	1	Plug, Male - 3 Position (Not Shown)	
301A	4460465	6	Socket, Female	
301B	1001117078	1	Fuseholder with Fuse (Not Shown)	
303	4922641	1	Switch Harness	

FIGURE 3-107. 7500W SKYPOWER GENERATOR INSTALLATION - 60HZ SPEC (DEUTZ TCD2.9L4 ENGINES) (OPTIONAL)

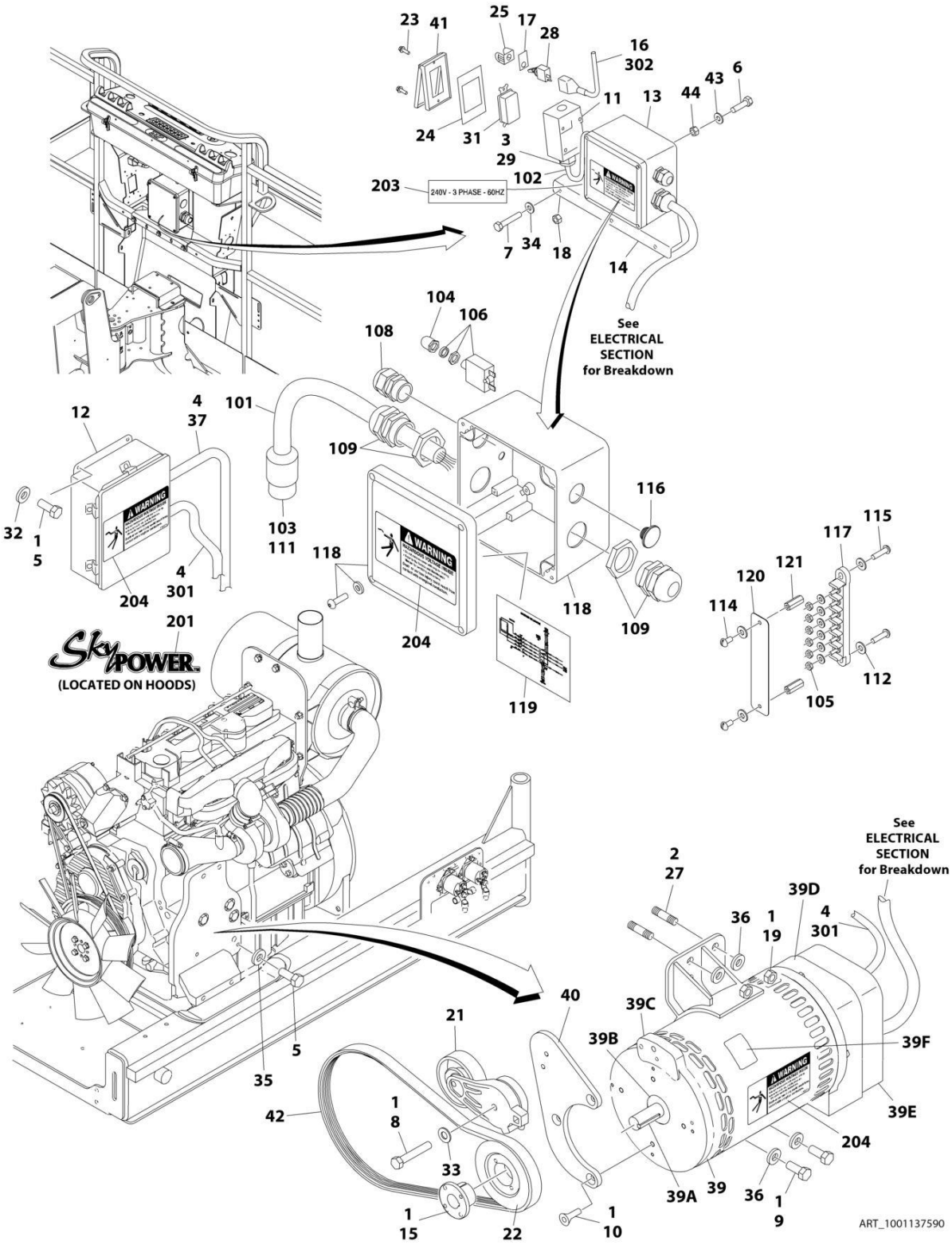

FIGURE 3-107. 7500W SKYPOWER GENERATOR INSTALLATION - 60HZ SPEC (DEUTZ TCD2.9L4 ENGINES) (OPTIONAL)

ITEM	PART NUMBER	QTY	DESCRIPTION	REV
	1001137590	Ref	7500W SKYPOWER GENERATOR INSTALLATION - 60HZ SPEC (DEUTZ TCD2.9L4 ENGINES)	G
		Ref	Note: See ELECTRICAL SECTION for Boom Cable Installation.	
1	0100011	AR	Compound, Locking	
2	0100019	AR	Compound, Locking	
3	0100020	AR	Sealant, Pipe	
4	0100048	AR	Grease, Dielectric	
5	0641404	5	Bolt 1/4 x 1/2	
6	3931016	4	Bolt 10 x 1	
7	0641516	3	Bolt 5/16 x 2	
8	0641618	1	Bolt 3/8 x 2	
9	0641810	2	Bolt 1/2 x 1-1/4	
10	0741607	3	Screw 3/8 x 7/8	
11	0860038	1	Box, Switch	
12	0861538	1	Box, Generator Control	
12	7024488	1	Card, Circuit - Generator Power (Not Shown)	
12	See Note	1	Fuse (Note: Not Available Purchase Locally)	
12	7024489	1	Card, Circuit - Control (Not Shown)	
		Ref	Note: When replacing card, rocker switch on card must be set for required application.	
12	70000619	1	Harness, Circuit Card	
13	1001157592	1	Junction Box Assembly (See Items 101-121 for Breakdown)	
14	0902888	1	Bracket, Generator Junction Box	
15	0962520	1	Bushing, Taper	
16	2820031	AR	Insulator, Heat Shrink	
17	3251102	1	Nameplate, Generator	
18	3311508	3	Nut 5/16	
19	3311801	2	Nut 1/2	
21	3580317	1	Pulley, Belt Tensioner	
22	3580318	1	Pulley, Generator	
23	3910606	AR	Screw #6 x 3/8	
24	3960422	1	Gasket, AC Receptacle	
25	4060802	1	Guard, Switch	
26	4240018	AR	Strap, Tie (Not Shown)	
27	4300157	2	Stud 1/2	
28	4360336	1	Switch, Toggle	
29	4460071	1	Connector, Strain Relief	
30	4460315	3	Terminal, Spade (Not Shown)	
31	4460346	1	Terminal, Receptacle	
32	4711400	4	Washer 1/4	
33	4711600	1	Washer 3/8	
34	4751500	3	Washer 5/16	
35	4791400	2	Starwasher 1/4	
36	4891800	4	Washer 1/2	
37	4922972	1	Harness, Generator Cable (See Separate Breakdown in ELECTRICAL SECTION)	
39	1001212223	1	Generator, 7500W	
39	70001100	1	Rotor (Includes p/n 70001384 & 70000863)	
39	70001384	1	Bearing, Shaft (Rear)	

SECTION 3 - ENGINE

ITEM	PART NUMBER	QTY	DESCRIPTION	REV
39	70000863	1	Fan, Generator	
39	70006093	1	Stater	
39	70003631	1	Brush-holder Assembly (was p/n 7024484)	
39A	70004099	NLA	Key (Use p/n 70004171)	
39B	70001966	1	Bearing, Ball Radial (Located in Belt Tensioner Endbell)	
39B	70003709	1	Ring, Retaining (Small)	
39B	70003708	1	Ring, Retaining (Large)	
39C	70004092	1	Endbell, Belt Tensioner	
39D	70004094	1	Endbell, Brush Block	
39E	70006094	1	Shroud Assembly	
39E	7027799	1	Block, Connector - 6 Position (Not Shown)	
39E	70002460	6	Nut, Brass (Attaches p/n 7027799 to Cover) (Not Shown)	
39E	70006095	1	Breaker, Circuit 30Amp (Not Shown)	
39E	70006096	1	Boot, Breaker (Not Shown)	
39E	7026597	1	Connector with Leads (Not Shown)	
39E	7026626	1	Connector with Pins (Not Shown)	
39E	70004098	1	Clamp, Cable (Not Shown)	
39E	70006097	1	Plate, End Panel (Not Shown)	
39E	70002291	1	Insulator, End Panel Generator (Not Shown)	
39E	70001974	1	Decal - Terminal Connections (Not Shown)	
39F	70001973	1	Decal - Warning Moving Parts	
40	1001138011	1	Bracket	
41	1001110873	1	Shield, Receptacle Cover	
42	1001142645	1	Belt, Generator	
43	4751000	4	Washer #10	
44	3311005	4	Nut #10	
	1001157592	Ref	JUNCTION BOX ASSEMBLY	C
101	1060343	1.5 ft/ 0.5m	Cable, Electrical 10/4	
102	1001179154	2.5 ft/ 0.8m	Cable, Electrical 12/3	
103	1671092	1	Cover	
104	3300396	1	Cover, Fuse	
105	3311001	6	Nut #10	
106	4360070	1	Circuit Breaker - 15Amp	
108	4460425	1	Strain Relief, Terminal	
109	4460426	2	Connector, Strain Relief	
111	4460963	1	Connector	
112	4711000	10	Washer #10	
114	10702077	2	Screw #10 x 3/8	
115	10702082	2	Screw #10 x 3/4	
116	1001152525	1	Plug	
117	1001157520	1	Block, Terminal	
118	1001157521	1	Box, Junction	
119	1001157528	1	Decal - Wiring Schematic	
120	1001158007	1	Cover, PVC	
121	1001158008	2	Stand-Off	
	0272435	Ref	DECAL INSTALLATION	D
201	1705460	2	Decal - SkyPower	
202	3251243	1	Decal - 120V - 60Hz (Not Shown - Located at Platform Receptacle)	
203	1705375	1	Decal - 240V - 3 Phase	

ITEM	PART NUMBER	QTY	DESCRIPTION	REV
204	1705387	3	Decal - Hazardous Voltage	
	1001122528	Ref	ELECTRICAL DIAGRAM COMPONENTS	B
301	1001119968	1	Generator Harness	B
301A	4460967	1	Plug, Male - 3 Position (Not Shown)	
301A	4460465	6	Socket, Female	
301B	1001117078	1	Fuseholder with Fuse (Not Shown)	
302	4922641	1	Switch Harness	

FIGURE 3-108. 7500W SKYPOWER GENERATOR INSTALLATION - 50HZ SPEC (DEUTZ TCD2.9L4 ENGINES) (OPTIONAL)

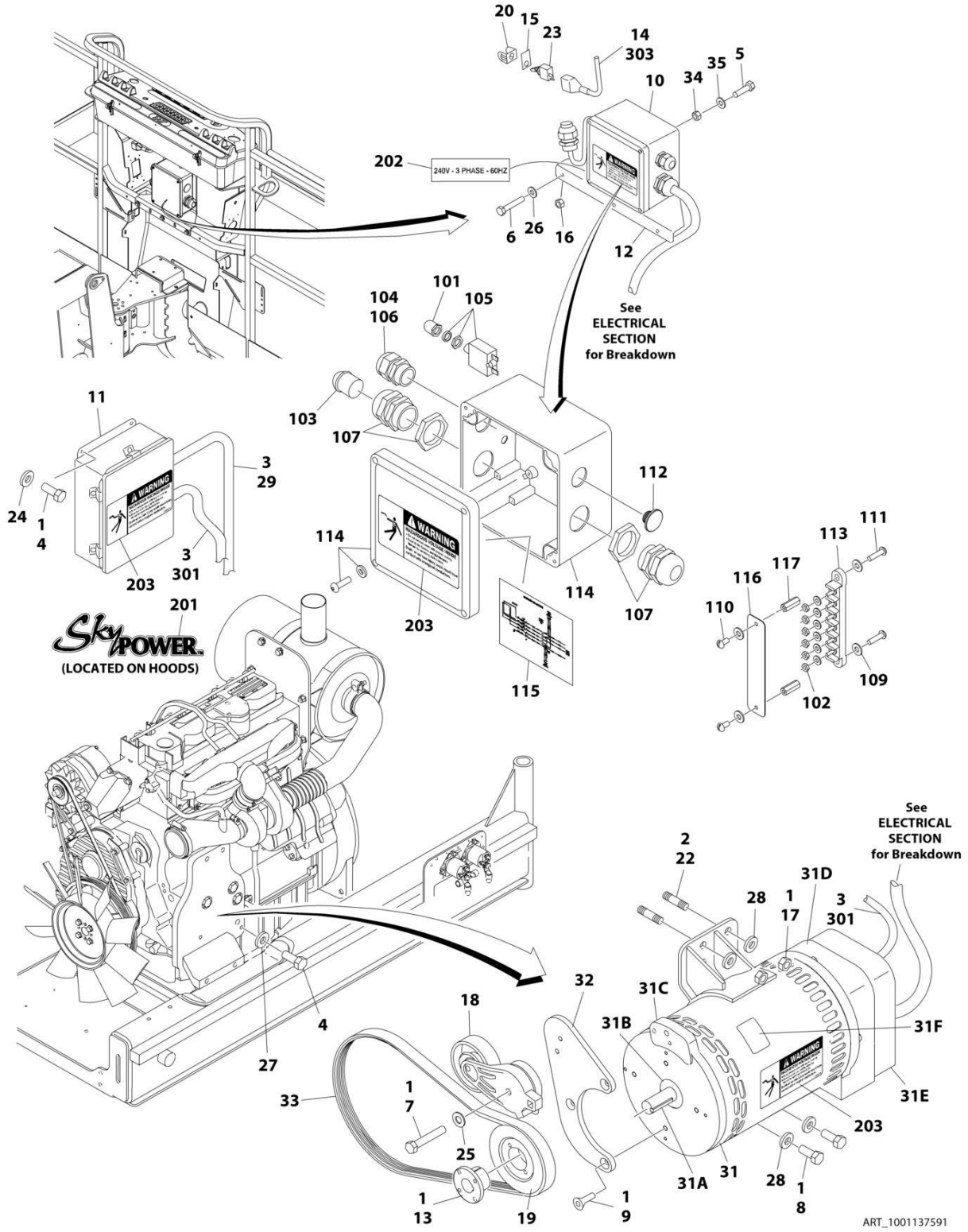

FIGURE 3-108. 7500W SKYPOWER GENERATOR INSTALLATION - 50HZ SPEC (DEUTZ TCD2.9L4 ENGINES) (OPTIONAL)

ITEM	PART NUMBER	QTY	DESCRIPTION	REV
	1001137591	Ref	7500W SKYPOWER GENERATOR INSTALLATION - 50HZ SPEC (DEUTZ TCD2.9L4 ENGINES)	D
		Ref	Note: See ELECTRICAL SECTION for Boom Cable Installation.	
1	0100011	AR	Compound, Locking	
2	0100019	AR	Compound, Locking	
3	0100048	AR	Grease, Dielectric	
4	0641404	5	Bolt 1/4 x 1/2	
5	3931016	4	Bolt 10 x 1	
6	0641516	3	Bolt 5/16 x 2	
7	0641618	1	Bolt 3/8 x 2	
8	0641810	2	Bolt 1/2 x 1-1/4	
9	0741607	3	Screw 3/8 x 7/8	
10	1001157525	1	Junction Box Assembly (See Items 101-117 for Breakdown)	
11	0861572	1	Box, Generator Control	
11	7024488	1	Card, Circuit - Generator Power (Not Shown)	
11	See Note	1	Fuse (Note: Not Available - Purchase Locally)	
11	7024489	1	Card, Circuit - Control (Not Shown)	
		Ref	Note: When replacing card, rocker switch on card must be set for required application.	
11	70000619	1	Harness, Circuit Card	
12	0902888	1	Bracket, Generator Junction Box	
13	0962520	1	Bushing, Taper	
14	2820031	AR	Insulator, Heat Shrink	
15	3251102	1	Nameplate, Generator	
16	3311508	3	Nut 5/16	
17	3311801	2	Nut 1/2	
18	3580317	1	Pulley, Belt Tensioner	
19	3580319	1	Pulley, Generator	
20	4060802	1	Guard, Switch	
21	4240018	AR	Strap, Tie (Not Shown)	
22	4300157	2	Stud 1/2	
23	4360336	1	Switch, Toggle	
24	4711400	4	Washer 1/4	
25	4711600	1	Washer 3/8	
26	4751500	3	Washer 5/16	
27	4791400	2	Starwasher 1/4	
28	4891800	4	Washer 1/2	
29	4922972	1	Harness, Generator Cable (See Separate Breakdown in ELECTRICAL Section)	
31	1001212223	1	Generator, 7500W	
31	70001100	1	Rotor (Includes p/n 70001384 & 70000863) (Not Shown)	
31	70001384	1	Bearing, Shaft (Rear) (Not Shown)	
31	70000863	1	Fan, Generator (Not Shown)	
31	70006093	1	Stater (Not Shown)	
31	70003631	1	Brush-holder Assembly (Not Shown)	
31A	70004099	NLA	Key (Use p/n 70004171)	
31B	70001966	1	Bearing, Ball Radial (Located in Belt Tensioner Endbell)	
31B	70003709	1	Ring, Retaining (Small)	
31B	70003708	1	Ring, Retaining (Large)	

SECTION 3 - ENGINE

ITEM	PART NUMBER	QTY	DESCRIPTION	REV
31C	70004092	1	Endbell, Belt Tensioner	
31D	70004094	1	Endbell, Brush Block	
31E	70006094	1	Shroud Assembly	
31E	7027799	1	Block, Connector - 6 Position (Not Shown)	
31E	70002460	6	Nut, Brass (Attaches p/n 7027799 to Cover) (Not Shown)	
31E	70006095	1	Breaker, Circuit 30Amp (Not Shown)	
31E	70006096	1	Boot, Breaker (Not Shown)	
31E	7026597	1	Connector with Leads (Not Shown)	
31E	7026626	1	Connector with Pins (Not Shown)	
31E	70004098	1	Clamp, Cable (Not Shown)	
31E	70006097	1	Plate, End Panel (Not Shown)	
31E	70002291	1	Insulator, End Panel (Not Shown)	
31E	70001974	1	Decal - Terminal Connections (Not Shown)	
31F	70001973	1	Decal - Warning Moving Parts	
32	1001138011	1	Bracket	
33	1001136357	1	Belt, Generator	
34	3311005	4	Nut #10	
35	4751000	4	Washer #10	
	1001157525	Ref	JUNCTION BOX ASSEMBLY	B
101	3300396	1	Cover, Fuse	
102	3311001	6	Nut #10	
103	3520189	1	Plug (50Hz Spec Only)	
104	3520192	1	Plug	
105	4360070	1	Circuit Breaker - 15Amp	
106	4460425	1	Strain Relief, Terminal	
107	4460426	2	Connector, Strain Relief	
109	4711000	10	Washer #10	
110	10702077	2	Screw #10 x 3/8	
111	10702082	2	Screw #10 x 3/4	
112	1001152525	1	Plug	
113	1001157520	1	Block, Terminal	
114	1001157521	1	Box, Junction	
115	1001157528	1	Decal - Wiring Schematic	
116	1001158007	1	Cover, PVC	
117	1001158008	2	Stand-Off	
	0272589	Ref	DECAL INSTALLATION	A
201	1705460	2	Decal - SkyPower	
202	1705461	1	Decal - 240V - 3 Phase	
203	1705489	3	Decal - Hazardous Voltage	
	1001122528	Ref	ELECTRICAL DIAGRAM COMPONENTS	B
301	1001119968	1	Generator Harness (With UGM)	B
301A	4460967	1	Plug, Male - 3 Position (Not Shown)	
301A	4460465	6	Socket, Female	
301B	1001117078	1	Fuseholder with Fuse (Not Shown)	
303	4922641	1	Switch Harness	

SECTION 4 - BOOM

SECTION 4 - BOOM

FIGURE 4-1. BOOM INSTALLATION - WITHOUT COLD WEATHER PLUS PACKAGE (1200SJP)

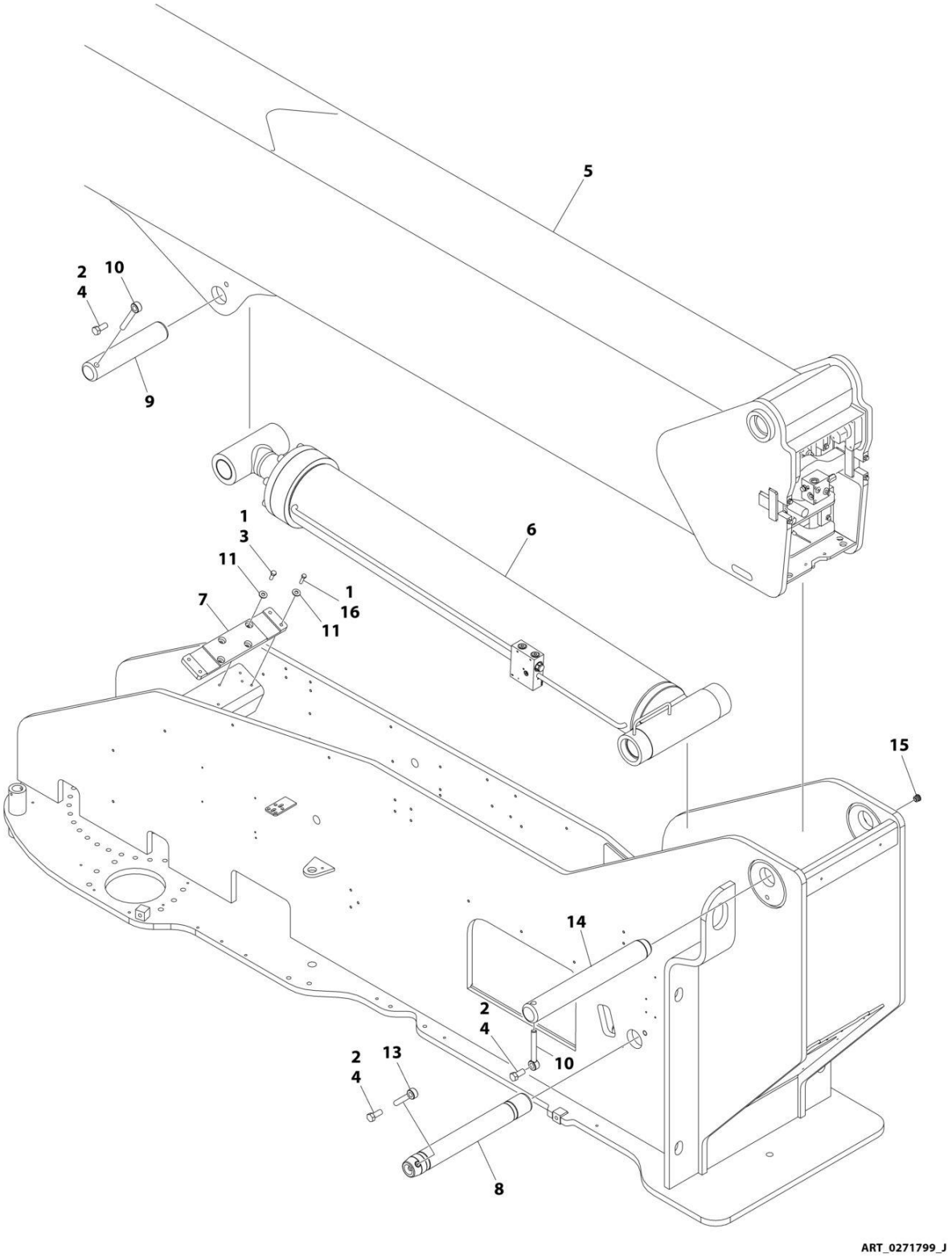

FIGURE 4-1. BOOM INSTALLATION - WITHOUT COLD WEATHER PLUS PACKAGE (1200SJP)

ITEM	PART NUMBER	QTY	DESCRIPTION	REV
	0271799	Ref	BOOM INSTALLATION	J
1	0100011	AR	Compound, Locking	
2	0100019	AR	Compound, Locking	
3	0641608	4	Bolt 3/8 x 1	
4	0642214	3	Bolt 3/4 x 1-3/4	
5	0801320	1	Boom Assembly (See Separate Breakdown in this Section)	
6	1001251024	1	Lift Cylinder Assembly (See Separate Breakdown in CYLINDER Section)	
7	1001237755	1	Pad	
8	3423208	1	Pin, Load Sensing	
9	3422955	1	Pin	
10	3841287	2	Keeper, Pin	
11	4751600	8	Washer 3/8	
13	3841581	1	Keeper, Pin	
14	3422988	1	Pin	
15	1001213705	1	Plug	
16	0641612	4	Bolt 3/8 x 1-1/2	

FIGURE 4-2. BOOM INSTALLATION - WITH COLD WEATHER PLUS PACKAGE (1200SJP)

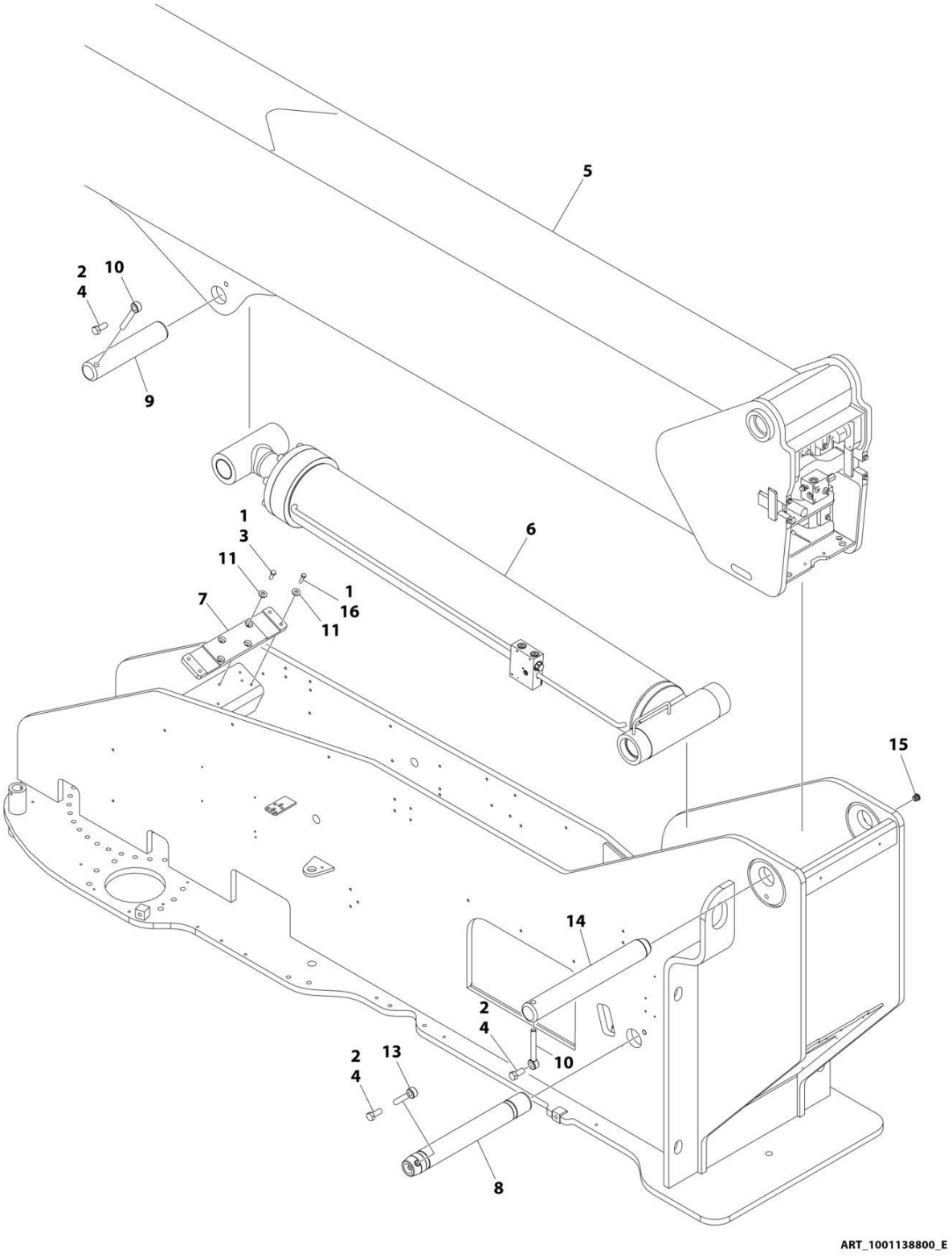

FIGURE 4-2. BOOM INSTALLATION - WITH COLD WEATHER PLUS PACKAGE (1200SJP)

ITEM	PART NUMBER	QTY	DESCRIPTION	REV
	1001138800	Ref	BOOM INSTALLATION	E
1	0100011	AR	Compound, Locking	
2	0100019	AR	Compound, Locking	
3	0641608	4	Bolt 3/8 x 1	
4	0642214	3	Bolt 3/4 x 1-3/4	
5	1001138801	1	Boom Assembly (See Separate Breakdown in this Section)	
6	1001251024	1	Lift Cylinder Assembly (See Separate Breakdown in CYLINDER Section)	
7	1001237755	1	Pad	
8	3423208	1	Pin, Load Sensing	
9	3422955	1	Pin	
10	3841287	2	Keeper, Pin	
11	4751600	8	Washer 3/8	
13	3841581	1	Keeper, Pin	
14	3422988	1	Pin	
15	1001213705	1	Plug	
16	0641611	4	Bolt 3/8 x 1-3/8	

FIGURE 4-3. BOOM INSTALLATION - WITHOUT COLD WEATHER PLUS PACKAGE (1350SJP)

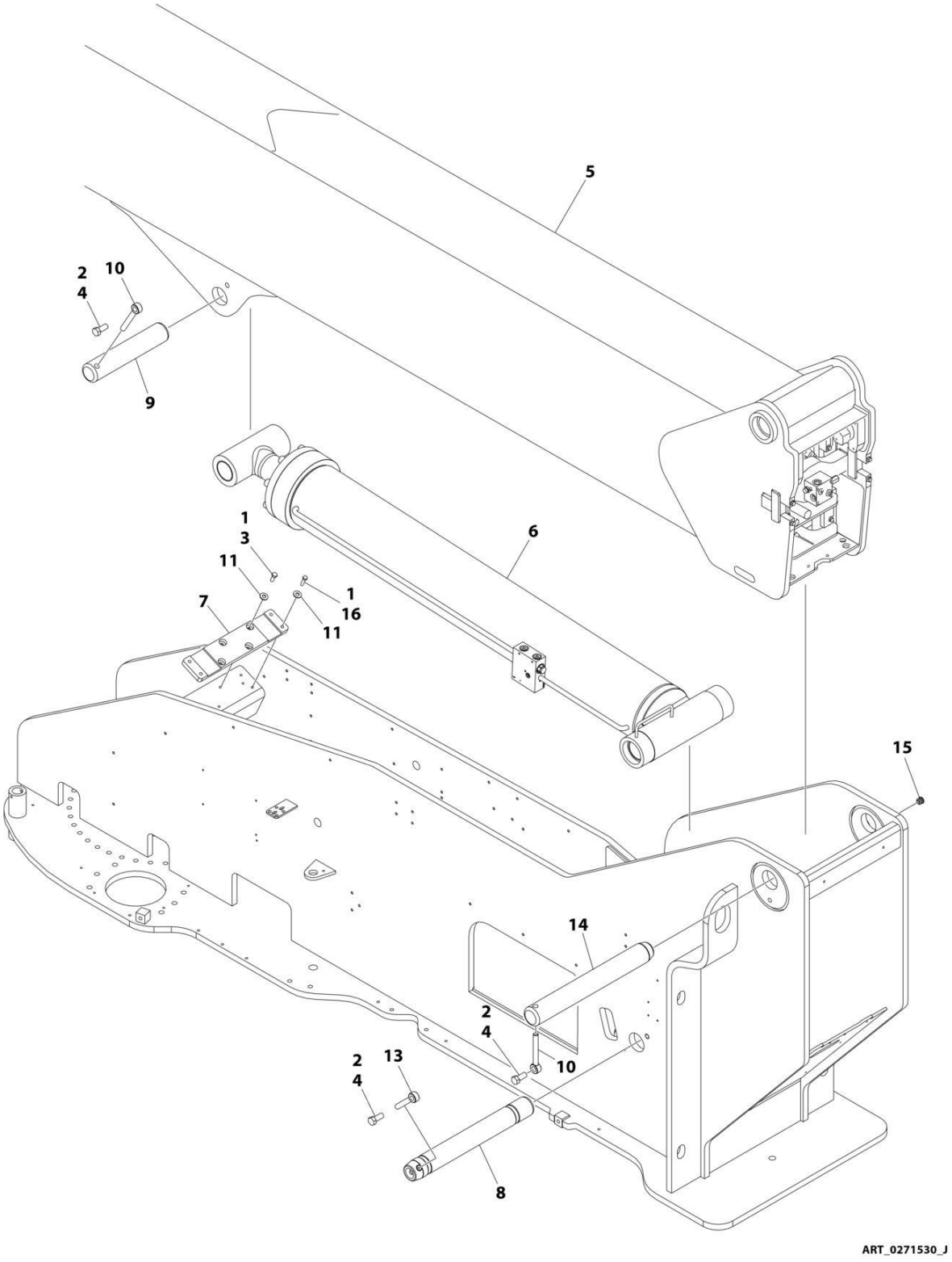

FIGURE 4-3. BOOM INSTALLATION - WITHOUT COLD WEATHER PLUS PACKAGE (1350SJP)

ITEM	PART NUMBER	QTY	DESCRIPTION	REV
	0271530	Ref	BOOM INSTALLATION	J
1	0100011	AR	Compound, Locking	
2	0100019	AR	Compound, Locking	
3	0641608	4	Bolt 3/8 x 1	
4	0642214	3	Bolt 3/4 x 1-3/4	
5	0801315	1	Boom Assembly (See Separate Breakdown in this Section)	
6	1001251024	1	Lift Cylinder Assembly (See Separate Breakdown in CYLINDER Section)	
7	1001237755	1	Pad	
8	3423208	1	Pin, Load Sensing	
9	3422955	1	Pin	
10	3841287	2	Keeper, Pin	
11	4751600	AR	Washer 3/8	
13	3841581	1	Keeper, Pin	
14	3422988	1	Pin	
15	1001213705	1	Plug	
16	0641612	4	Bolt 3/8 x 1-1/2	

FIGURE 4-4. BOOM INSTALLATION - WITH COLD WEATHER PLUS PACKAGE (1350SJP)

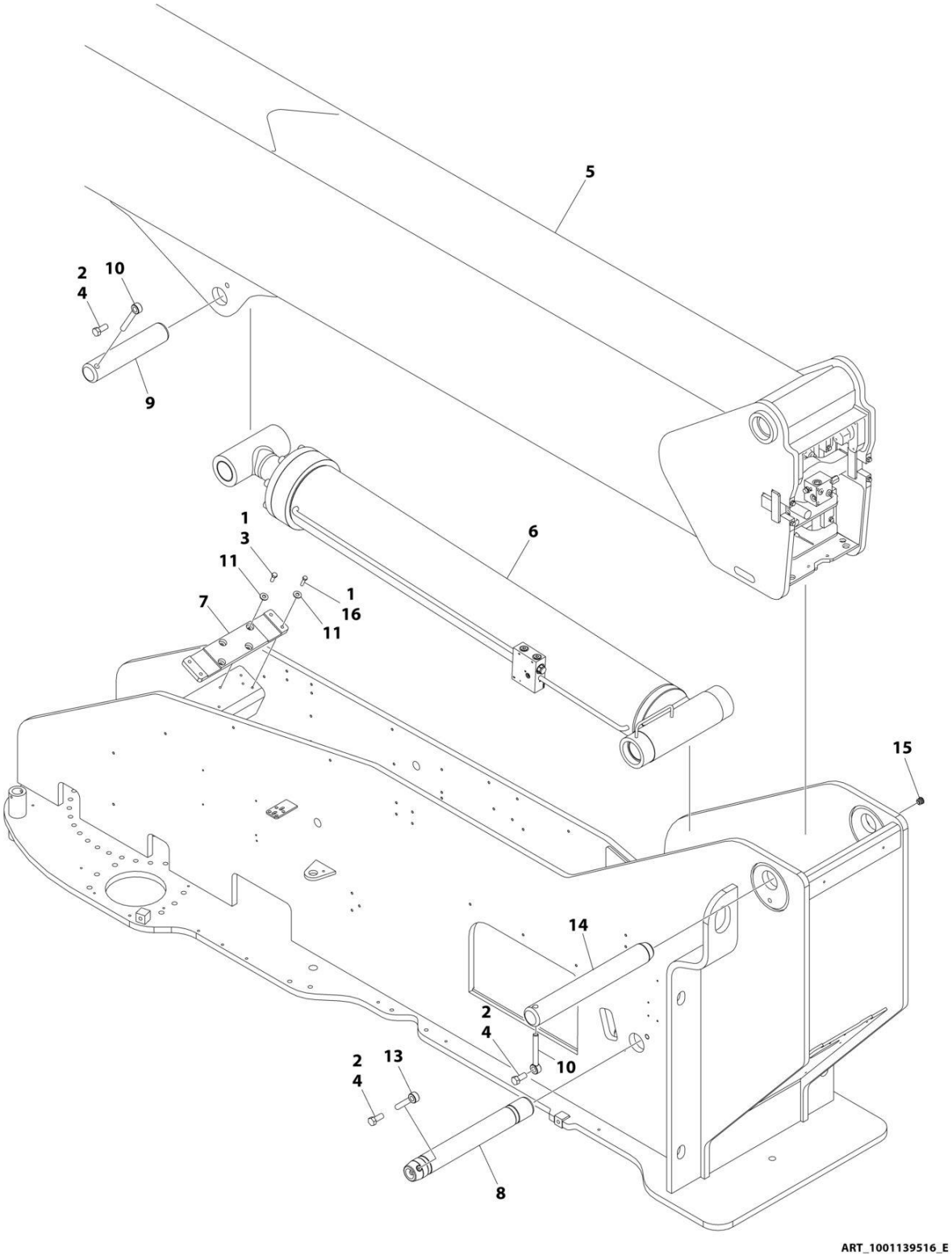

FIGURE 4-4. BOOM INSTALLATION - WITH COLD WEATHER PLUS PACKAGE (1350SJP)

ITEM	PART NUMBER	QTY	DESCRIPTION	REV
	1001139516	Ref	BOOM INSTALLATION	E
1	0100011	AR	Compound, Locking	
2	0100019	AR	Compound, Locking	
3	0641608	4	Bolt 3/8 x 1	
4	0642214	3	Bolt 3/4 x 1-3/4	
5	1001139517	1	Boom Assembly (See Separate Breakdown in this Section)	
6	1001251024	1	Lift Cylinder Assembly (See Separate Breakdown in CYLINDER Section)	
7	1001237755	1	Pad	
8	3423208	1	Pin, Load Sensing	
9	3422955	1	Pin	
10	3841287	2	Keeper, Pin	
11	4751600	8	Washer 3/8	
13	3841581	1	Keeper, Pin	
14	3422988	1	Pin	
15	1001213705	1	Plug	
16	0641611	4	Bolt 3/8 x 1-3/8	

SECTION 4 - BOOM

FIGURE 4-5. BOOM ASSEMBLY - WITHOUT COLD WEATHER PLUS PACKAGE (1200SJP)

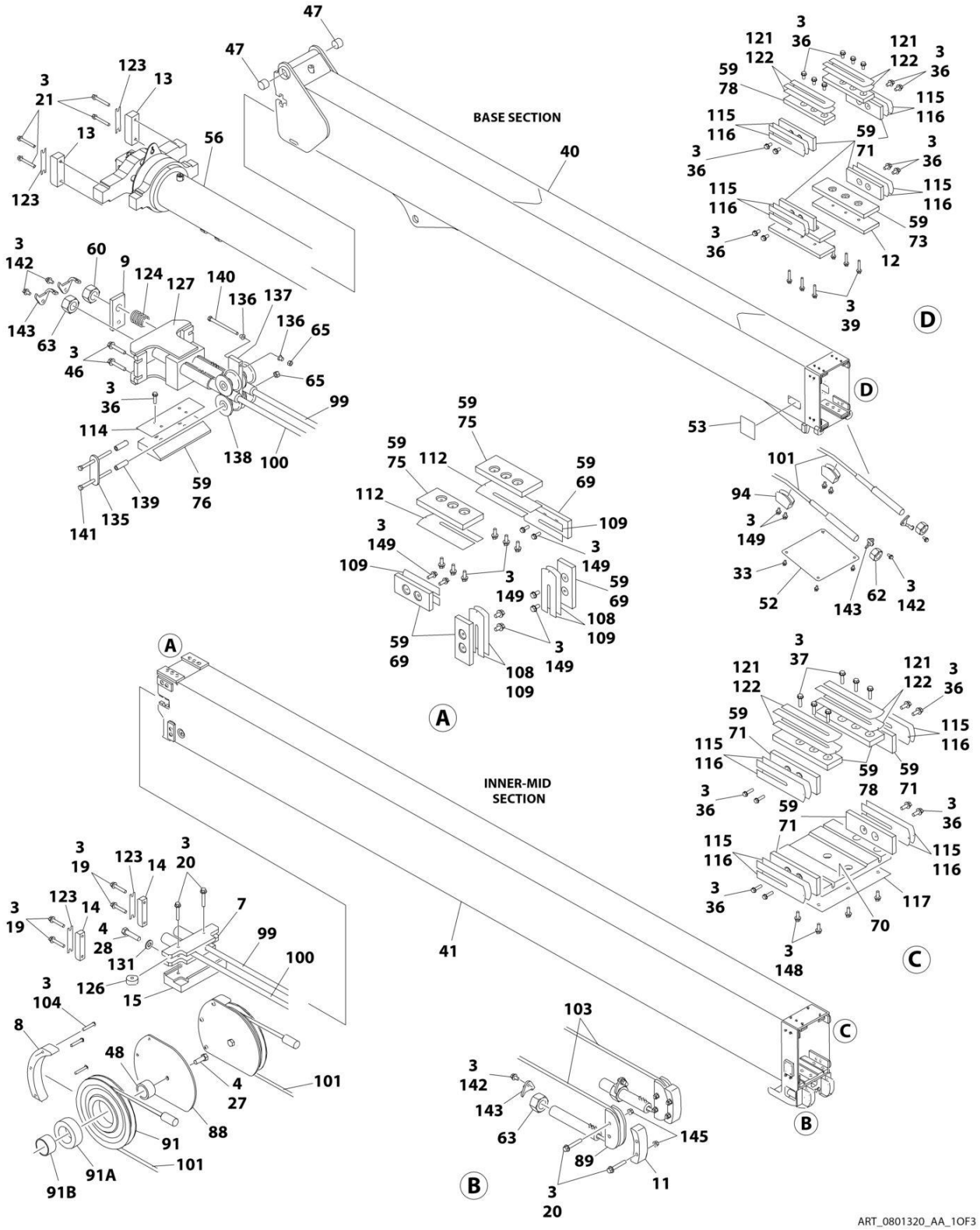

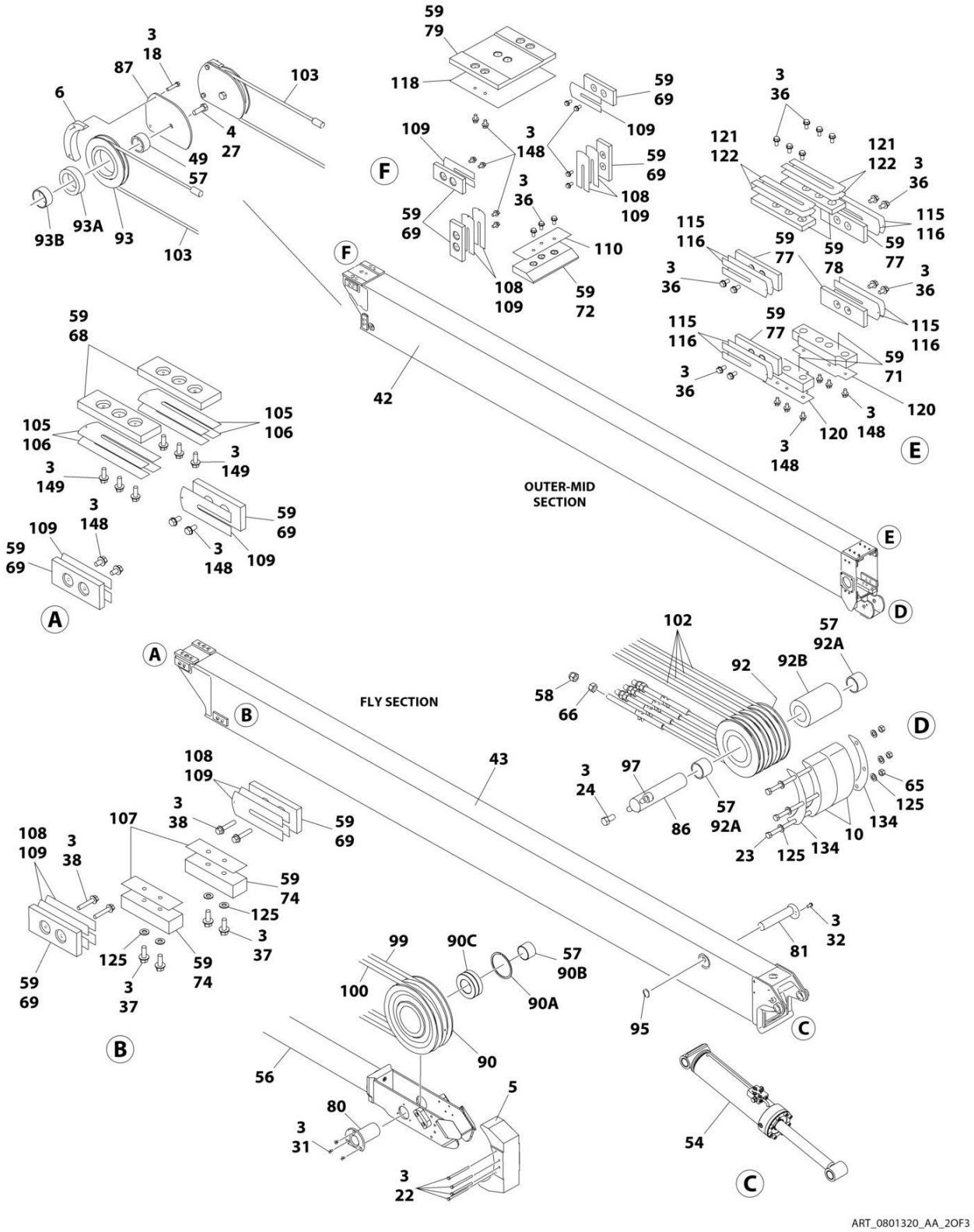
OUTER-MID SECTION
FLY SECTION
ART_0801320_AA_2OF3

SECTION 4 - BOOM

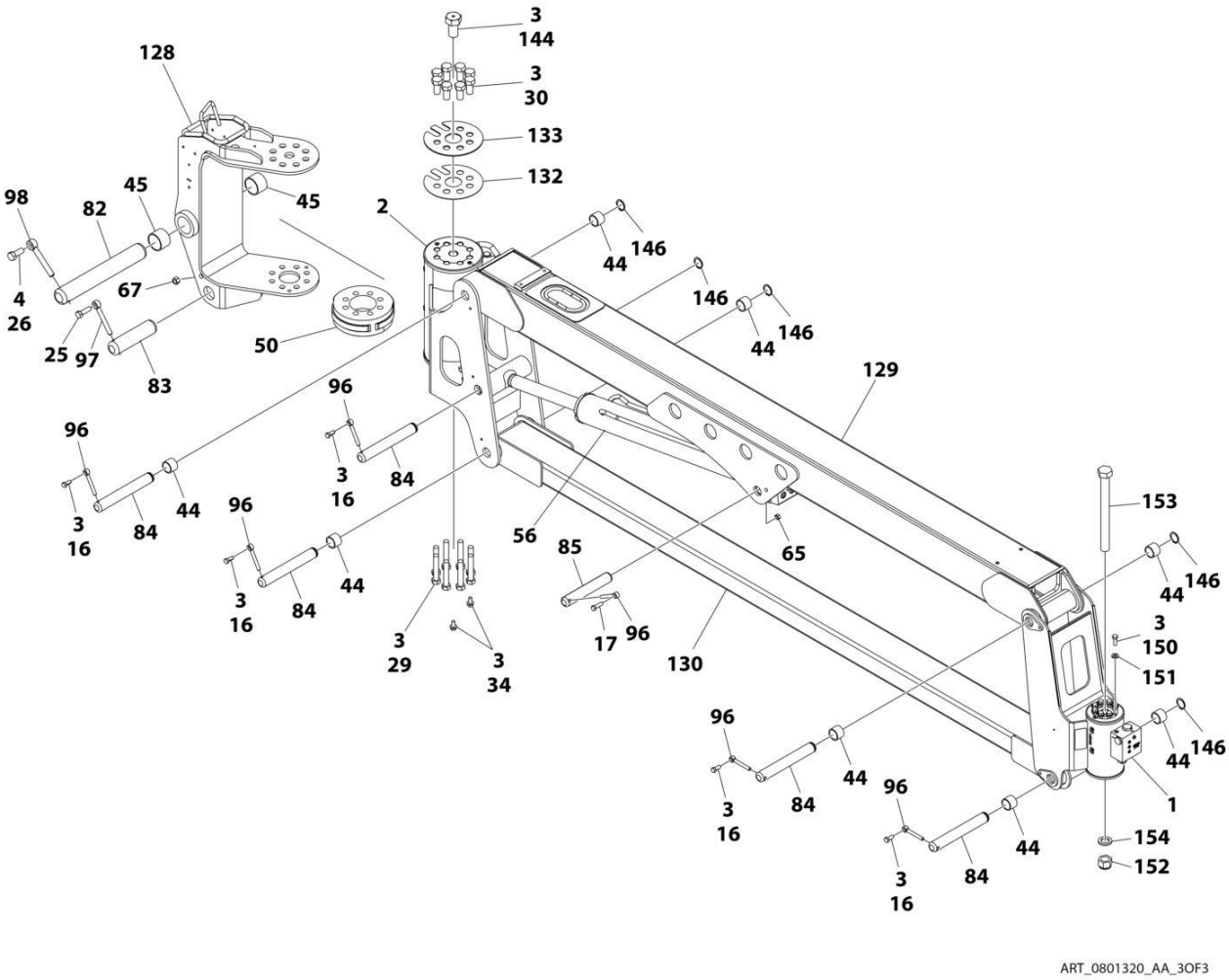

FIGURE 4-5. BOOM ASSEMBLY - WITHOUT COLD WEATHER PLUS PACKAGE (1200SJP)

ITEM	PART NUMBER	QTY	DESCRIPTION	REV
	0801320	Ref	BOOM ASSEMBLY - WITHOUT COLD WEATHER PLUS PACKAGE (1200SJP)	AA
1	1001307712	1	Actuator Assembly (Platform Rotate) (See Separate Breakdown in this Section)	
2	1001178248	1	Actuator Assembly (Jib Rotate) (See Separate Breakdown in this Section)	
3	0100011	AR	Compound, Locking	
4	0100019	AR	Compound, Locking	
5	0561431	1	Block, Rope Retainer	
6	0561437	2	Block, Rope Retainer	
7	0561439	1	Block, Outer Mid Extend	
8	0561444	2	Block, Cable Retainer	
9	0561454	1	Block, Switch Adjuster	
10	0561457	2	Block, Cable Retainer	
11	0561458	2	Block, Cable Retainer	
12	0561471	2	Block, Spacer	
13	0561500	2	Block, Trunnion Keeper	
14	0561482	2	Block, Trunnion Keeper	
15	3340955	1	Pad	
16	0641607	5	Bolt 3/8 x 7/8	
17	0641610	1	Bolt 3/8 x 1-1/4	
18	0641615	4	Bolt 3/8 x 1-7/8	
19	0791618	4	Screw 3/8 x 2-1/4	
20	0791620	10	Screw 3/8 x 2-1/2	
21	0791624	4	Screw 3/8 x 3	
22	0641646	4	Bolt 3/8 x 5-3/4	
23	0641652	3	Bolt 3/8 x 6-1/2	
24	0641808	1	Bolt 1/2 x 1	
25	0641813	1	Bolt 1/2 x 1-5/8	
26	0642012	1	Bolt 5/8 x 1-1/2	
27	0642014	4	Bolt 5/8 x 1-3/4	
28	0642022	2	Bolt 5/8 x 2-3/4	
29	0682028	8	Bolt 5/8 x 3-1/2 Grade 8	
30	0682212	8	Bolt 3/4 x 1-1/2 Grade 8	
31	0741606	3	Screw 3/8 x 3/4	
32	0741806	1	Screw 1/2 x 3/4	
33	0791604	4	Screw 3/8 x 1/2	
34	0791606	2	Screw 3/8 x 3/4	
36	0811608	43	Screw 3/8 x 1	
37	0811610	10	Screw 3/8 x 1-1/4	
38	0811614	4	Screw 3/8 x 1-3/4	
39	0811616	6	Screw 3/8 x 2	
40	0801316	1	Base, Boom	
41	0801317	1	Mid, Inner	
42	0801318	1	Mid, Outer	
43	0801319	1	Fly, Boom	
44	0961951	8	Bushing (Part of Item 129 & 130)	
45	0962224	2	Bearing	
46	0791612	4	Screw 3/8 x 1-1/2	
47	0962297	2	Bushing	

ITEM	PART NUMBER	QTY	DESCRIPTION	REV
48	0962409	2	Bushing	
49	0962410	2	Bushing	
50	1100131	1	Cam	
52	1671032	1	Cover	
53	1671033	1	Cover	
54	1001251023	1	Platform Level Cylinder Assembly (See Separate Breakdown in CYLINDER Section)	
55	1001251025	1	Jib Cylinder Assembly (See Separate Breakdown in CYLINDER Section)	
56	1001251026	1	Telescope Cylinder Assembly (See Separate Breakdown in CYLINDER Section)	
57	3020039	AR	Lubricant, Moly	
58	3300239	4	Nut, Nylon Insert	
59	3020042	AR	Lubricant with PTFE	
60	3300458	1	Nut 1	
62	3300460	2	Nut 1-1/4	
63	3300461	3	Nut 1-3/8	
65	3311605	7	Nut 3/8	
66	3311801	4	Nut 1/2	
67	3311805	1	Nut 1/2	
68	3340871	2	Pad, Wear	
69	3340881	12	Pad, Wear	
70	3340910	1	Pad, Wear	
71	3340912	2	Pad, Wear	
72	4700039	1	Pad, Wear	
73	3340916	2	Pad, Wear	
74	3340917	2	Pad, Wear	
75	3340918	2	Pad, Wear	
76	4700038	1	Pad, Wear	
77	3340921	12	Pad, Wear	
78	3340922	6	Pad, Wear	
79	3340926	1	Pad, Wear	
80	3422926	1	Pin	
81	3422937	1	Pin	
82	1001119899	1	Pin	
83	3422956	1	Pin	
84	3422957	5	Pin	
85	3422958	1	Pin	
86	3422959	1	Pin	
87	3572950	2	Plate, Cable Retract Retainer	
88	3572951	2	Plate, Cable Retract Retainer	
89	3580342	2	Sheave	
90	1001154260	2	Sheave	
90A	1001154294	1	Ring, Snap	
90B	1001154304	1	Bushing (Inner)	
90C	1001154306	1	Bushing (Outer)	
91	3580298	2	Sheave	
91A	0962402	1	Bushing (Outer)	
91B	0962406	1	Bushing (Inner)	
92	3580300	1	Sheave	
92A	1001139972	1	Sleeve, Bushing (Inner)	
92B	0962403	1	Bushing (Outer)	

ITEM	PART NUMBER	QTY	DESCRIPTION	REV
93	3580302	2	Sheave	
93A	0962404	1	Bushing (Outer)	
93B	0962411	1	Bushing (Inner)	
94	3580341	2	Sheave	
95	3760233	1	Ring, Retaining	
96	3841143	6	Keeper, Pin	
97	3841203	2	Keeper, Pin	
98	3841258	1	Keeper, Pin	
99	3890034	1	Cable, Outer Mid Extend	
100	3890035	1	Cable, Outer Mid Extend	
101	3890036	2	Cable, Outer Mid Retract	
102	3890037	4	Cable, Fly Extend	
103	3890038	2	Cable, Fly Retract	
104	0641618	6	Screw 3/8 x 2-1/4	
105	4070863	2	Shim #11 Gauge	
106	4070864	2	Shim #18 Gauge	
107	4070895	2	Shim #16 Gauge	
108	4070897	6	Shim #18 Gauge	
109	4070898	12	Shim #11 Gauge	
110	4071012	1	Shim #16 Gauge	
112	4071015	2	Shim #16 Gauge	
114	4071017	1	Shim #16 Gauge	
115	4071018	8	Shim #16 Gauge	
116	4071019	12	Shim #11 Gauge	
117	4071024	1	Shim #16 Gauge	
118	4071025	1	Shim #16 Gauge	
120	4071027	2	Shim #16 Gauge	
121	4071028	6	Shim #16 Gauge	
122	4071029	6	Shim #11 Gauge	
123	4071031	4	Shim #16 Gauge	
124	4160197	1	Spring	
125	4711600	10	Washer 3/8	
126	4740509	2	Spacer	
127	4846453	1	Plate, Mounting	
128	4846462	1	Pivot	
129	4846482	1	Link, Jib (Upper) (Includes Item 44)	
130	0801550	1	Link, Jib (Lower) (Includes Item 44)	
131	4892000	2	Washer 5/8	
132	4071044	1	Shim #18 Gauge	
133	4071045	1	Shim #11 Gauge	
134	4071046	2	Shim #16 Gauge	
135	0363066	2	Bar, Stabilizer	
136	0962447	2	Bearing, Flanged	
137	3573437	1	Plate, Pulley Adjustment	
138	3580306	4	Pulley	
139	4568423	4	Tube, Spacer	
140	0641640	1	Bolt 3/8 x 5	
141	0641644	2	Bolt 3/8 x 5-1/2	
142	0791605	6	Screw 3/8 x 5/8	
143	3573444	6	Plate, Lock	
144	0630558	1	Bolt 1 x 2	

SECTION 4 - BOOM

ITEM	PART NUMBER	QTY	DESCRIPTION	REV
145	3311608	8	Nut 3/8	
146	3760133	5	Ring, Retaining	
148	0811606	30	Screw 3/8 x 3/4	
149	0811607	24	Screw 3/8 x 7/8	
150	0681608	8	Bolt 3/8 x 1	
151	4891600	8	Washer 3/8	
152	1001174040	1	Nut	
153	1001255133	1	Bolt 1 x 11	
154	4892600001	1	Washer 1	

SECTION 4 - BOOM

FIGURE 4-6. BOOM ASSEMBLY - WITH COLD WEATHER PLUS PACKAGE (1200SJP)

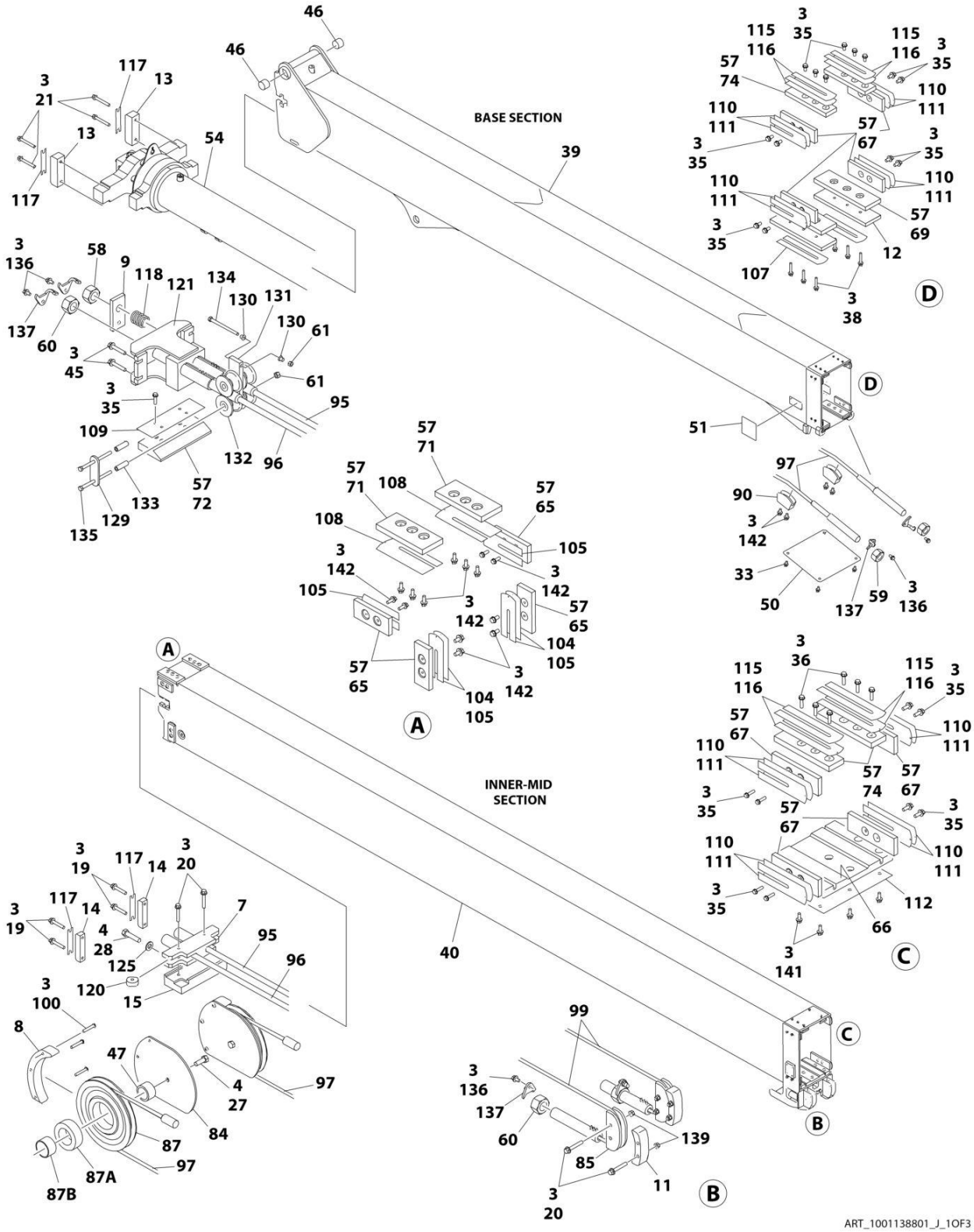

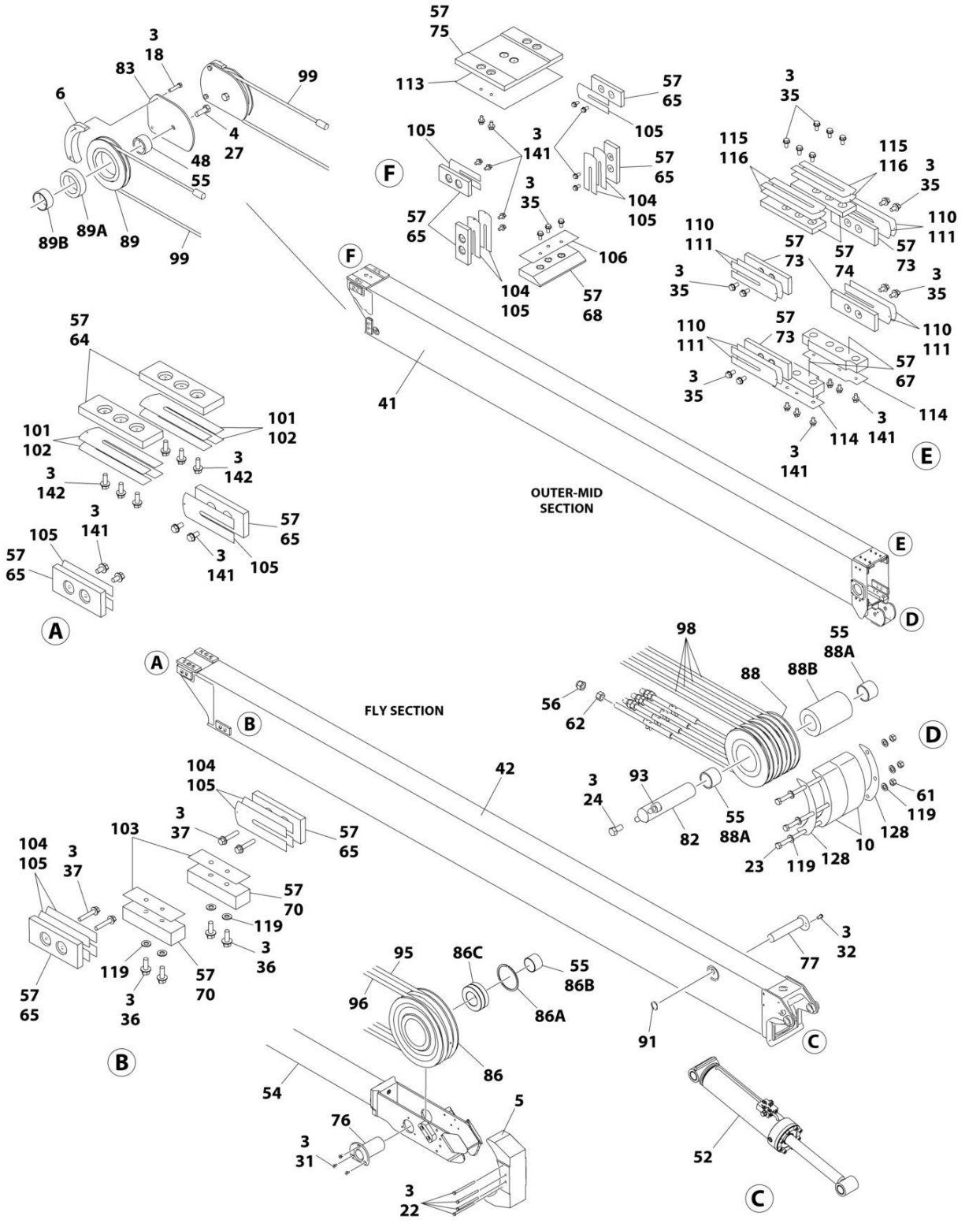
OUTER-MID SECTION
FLY SECTION
ART_1001138801_J_2OF3

SECTION 4 - BOOM

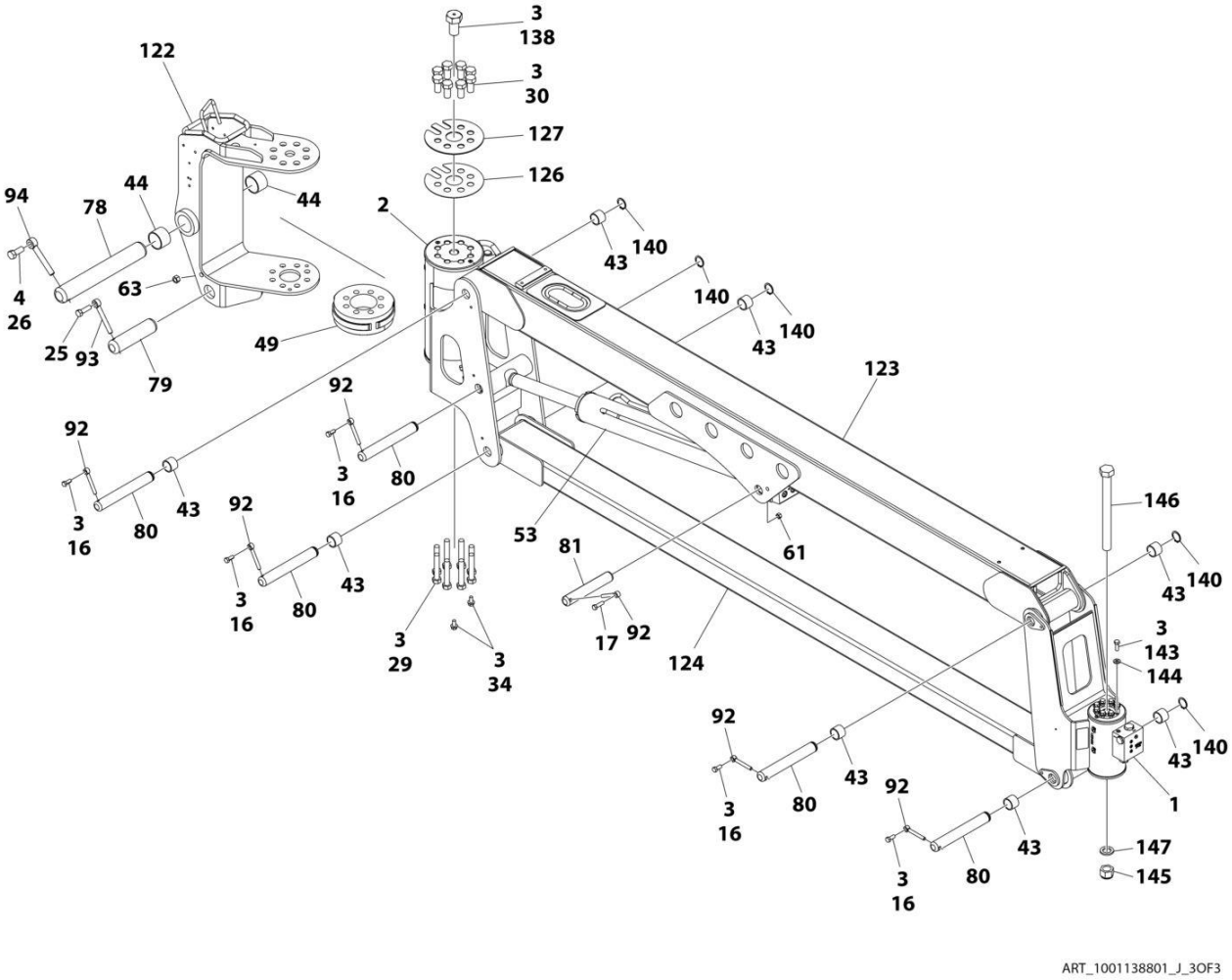

FIGURE 4-6. BOOM ASSEMBLY - WITH COLD WEATHER PLUS PACKAGE (1200SJP)

ITEM	PART NUMBER	QTY	DESCRIPTION	REV
	1001138801	Ref	BOOM ASSEMBLY - WITH COLD WEATHER PLUS PACKAGE (1200SJP)	J
1	1001307712	1	Actuator Assembly (Platform Rotate) (See Separate Breakdown in this Section)	
2	1001178248	1	Actuator Assembly (Jib Rotate) (See Separate Breakdown in this Section)	
3	0100011	AR	Compound, Locking	
4	0100019	AR	Compound, Locking	
5	0561431	1	Block, Rope Retainer	
6	0561437	2	Block, Rope Retainer	
7	0561439	1	Block, Outer Mid Extend	
8	0561444	2	Block, Cable Retainer	
9	0561454	1	Block, Switch Adjuster	
10	0561457	2	Block, Cable Retainer	
11	0561458	2	Block, Cable Retainer	
12	0561471	2	Block, Spacer	
13	0561500	2	Block, Trunnion Keeper	
14	0561482	2	Block, Trunnion Keeper	
15	3340955	1	Pad	
16	0641607	5	Bolt 3/8 x 7/8	
17	0641610	1	Bolt 3/8 x 1-1/4	
18	0641615	4	Bolt 3/8 x 1-7/8	
19	0791618	4	Screw 3/8 x 2-1/4	
20	0791620	10	Screw 3/8 x 2-1/2	
21	0791624	4	Screw 3/8 x 3	
22	0641646	4	Bolt 3/8 x 5-3/4	
23	0641652	3	Bolt 3/8 x 6-1/2	
24	0641808	1	Bolt 1/2 x 1	
25	0641813	1	Bolt 1/2 x 1-5/8	
26	0642012	1	Bolt 5/8 x 1-1/2	
27	0642014	4	Bolt 5/8 x 1-3/4	
28	0642022	2	Bolt 5/8 x 2-3/4	
29	0682028	8	Bolt 5/8 x 3-1/2 Grade 8	
30	0682212	8	Bolt 3/4 x 1-1/2 Grade 8	
31	0741606	3	Screw 3/8 x 3/4	
32	0741806	1	Screw 1/2 x 3/4	
33	0791604	4	Screw 3/8 x 1/2	
34	0791606	2	Screw 3/8 x 3/4	
35	0811608	43	Screw 3/8 x 1	
36	0811610	10	Screw 3/8 x 1-1/4	
37	0811614	4	Screw 3/8 x 1-3/4	
38	0811616	6	Screw 3/8 x 2	
39	0801316	1	Base, Boom	
40	0801317	1	Mid, Inner	
41	0801318	1	Mid, Outer	
42	0801319	1	Fly, Boom	
43	0961951	8	Bushing (Part of Items 123 & 124)	
44	0962224	2	Bushing	
45	0791612	4	Screw 3/8 x 1-1/2	
46	0962297	2	Bushing	

ITEM	PART NUMBER	QTY	DESCRIPTION	REV
47	0962409	2	Bushing	
48	0962410	2	Bushing	
49	1100131	1	Cam	
50	1671032	1	Cover	
51	1671033	1	Cover	
52	1001228053	1	Platform Level Cylinder Assembly (See Separate Breakdown in CYLINDER Section)	
53	1001251025	1	Jib Cylinder Assembly (See Separate Breakdown in CYLINDER Section)	
54	1001251026	1	Telescope Cylinder Assembly (See Separate Breakdown in CYLINDER Section)	
55	3020039	AR	Lubricant, Moly	
56	3300239	4	Nut, Nylon Insert	
57	3020042	AR	Lubricant with PTFE	
58	3300458	1	Nut 1	
59	3300460	2	Nut 1-1/4	
60	3300461	3	Nut 1-3/8	
61	3311605	7	Nut 3/8	
62	3311801	4	Nut 1/2	
63	3311805	1	Nut 1/2	
64	3340871	2	Pad, Wear	
65	3340881	12	Pad, Wear	
66	3340910	1	Pad, Wear	
67	3340912	2	Pad, Wear	
68	4700039	1	Pad, Wear	
69	3340916	2	Pad, Wear	
70	3340917	2	Pad, Wear	
71	3340918	2	Pad, Wear	
72	4700038	1	Pad, Wear	
73	3340921	12	Pad, Wear	
74	3340922	6	Pad, Wear	
75	3340926	1	Pad, Wear	
76	3422926	1	Pin	
77	3422937	1	Pin	
78	1001119899	1	Pin	
79	3422956	1	Pin	
80	3422957	5	Pin	
81	3422958	1	Pin	
82	3422959	1	Pin	
83	3572950	2	Plate, Cable Retract Retainer	
84	3572951	2	Plate, Cable Retract Retainer	
85	3580342	2	Sheave	
86	1001154260	2	Sheave	
86A	1001154294	1	Ring, Snap	
86B	1001154304	1	Bushing (Inner)	
86C	1001154306	1	Bushing (Outer)	
87	3580298	2	Sheave	
87A	0962402	1	Bushing (Outer)	
87B	0962406	1	Bushing (Inner)	
88	3580300	1	Sheave	
88A	1001139972	1	Sleeve, Bushing (Inner)	
88B	0962403	1	Bushing (Outer)	

ITEM	PART NUMBER	QTY	DESCRIPTION	REV
89	3580302	2	Sheave	
89A	0962404	1	Bushing (Outer)	
89B	0962411	1	Bushing (Inner)	
90	3580341	2	Sheave	
91	3760233	1	Ring, Retaining	
92	3841143	6	Keeper, Pin	
93	3841203	2	Keeper, Pin	
94	3841258	1	Keeper, Pin	
95	3890034	1	Cable, Outer Mid Extend	
96	3890035	1	Cable, Outer Mid Extend	
97	3890036	2	Cable, Outer Mid Retract	
98	3890037	4	Cable, Fly Extend	
99	3890038	2	Cable, Fly Retract	
100	0641618	6	Screw 3/8 x 2-1/4	
101	4070863	2	Shim #11 Gauge	
102	4070864	2	Shim #18 Gauge	
103	4070895	2	Shim #16 Gauge	
104	4070897	6	Shim #18 Gauge	
105	4070898	12	Shim #11 Gauge	
106	4071012	1	Shim #16 Gauge	
107	4071013	2	Shim #16 Gauge	
108	4071015	2	Shim #16 Gauge	
109	4071017	1	Shim #16 Gauge	
110	4071018	8	Shim #16 Gauge	
111	4071019	12	Shim #11 Gauge	
112	4071024	1	Shim #16 Gauge	
113	4071025	1	Shim #16 Gauge	
114	4071027	2	Shim #16 Gauge	
115	4071028	6	Shim #16 Gauge	
116	4071029	6	Shim #11 Gauge	
117	4071031	4	Shim #16 Gauge	
118	4160197	1	Spring	
119	4711600	10	Washer 3/8	
120	4740509	2	Spacer	
121	4846453	1	Plate, Mounting	
122	4846462	1	Pivot	
123	4846482	1	Link, Jib (Upper) (Includes Item 43)	
124	0801550	1	Link, Jib (Lower) (Includes Item 43)	
125	4892000	2	Washer 5/8	
126	4071044	1	Shim #18 Gauge	
127	4071045	1	Shim #11 Gauge	
128	4071046	2	Shim #16 Gauge	
129	0363066	2	Bar, Stabilizer	
130	0962447	2	Bearing, Flanged	
131	3573437	1	Plate, Pulley Adjustment	
132	3580306	4	Pulley	
133	4568423	4	Tube, Spacer	
134	0641640	1	Bolt 3/8 x 5	
135	0641644	2	Bolt 3/8 x 5-1/2	
136	0791605	6	Screw 3/8 x 5/8	
137	3573444	6	Plate, Lock	

SECTION 4 - BOOM

ITEM	PART NUMBER	QTY	DESCRIPTION	REV
138	0630558	1	Bolt 1 x 2	
139	3311608	8	Nut 3/8	
140	3760133	5	Ring, Retaining	
141	0811606	30	Screw 3/8 x 3/4	
142	0811607	24	Screw 3/8 x 7/8	
143	0681608	8	Bolt 3/8 x 1	
144	4891600	8	Washer 3/8	
145	1001174040	1	Nut	
146	1001255133	1	Bolt 1 x 11	
147	4892600001	1	Washer 1	

SECTION 4 - BOOM

FIGURE 4-7. BOOM ASSEMBLY - WITHOUT COLD WEATHER PLUS PACKAGE (1350SJP)

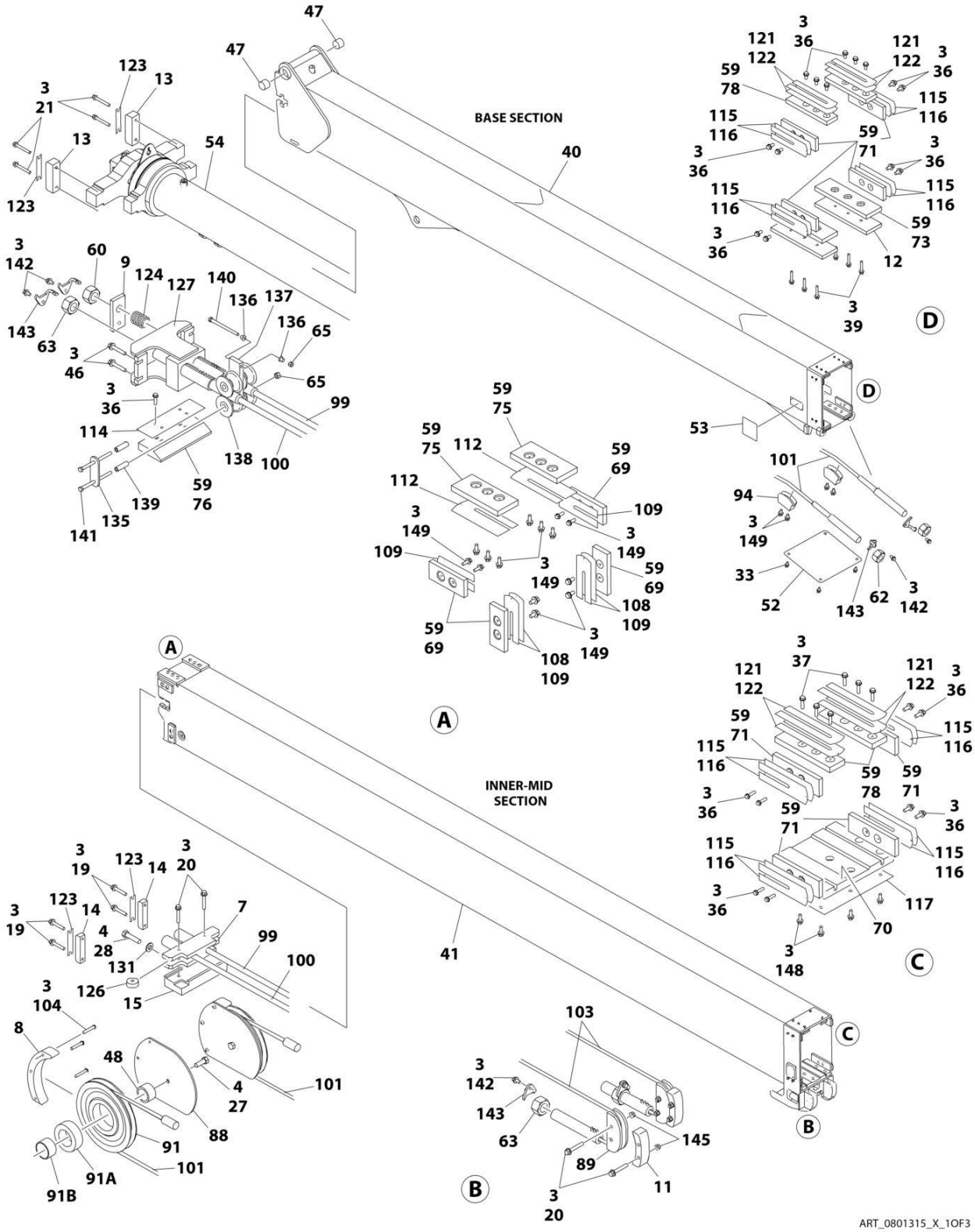

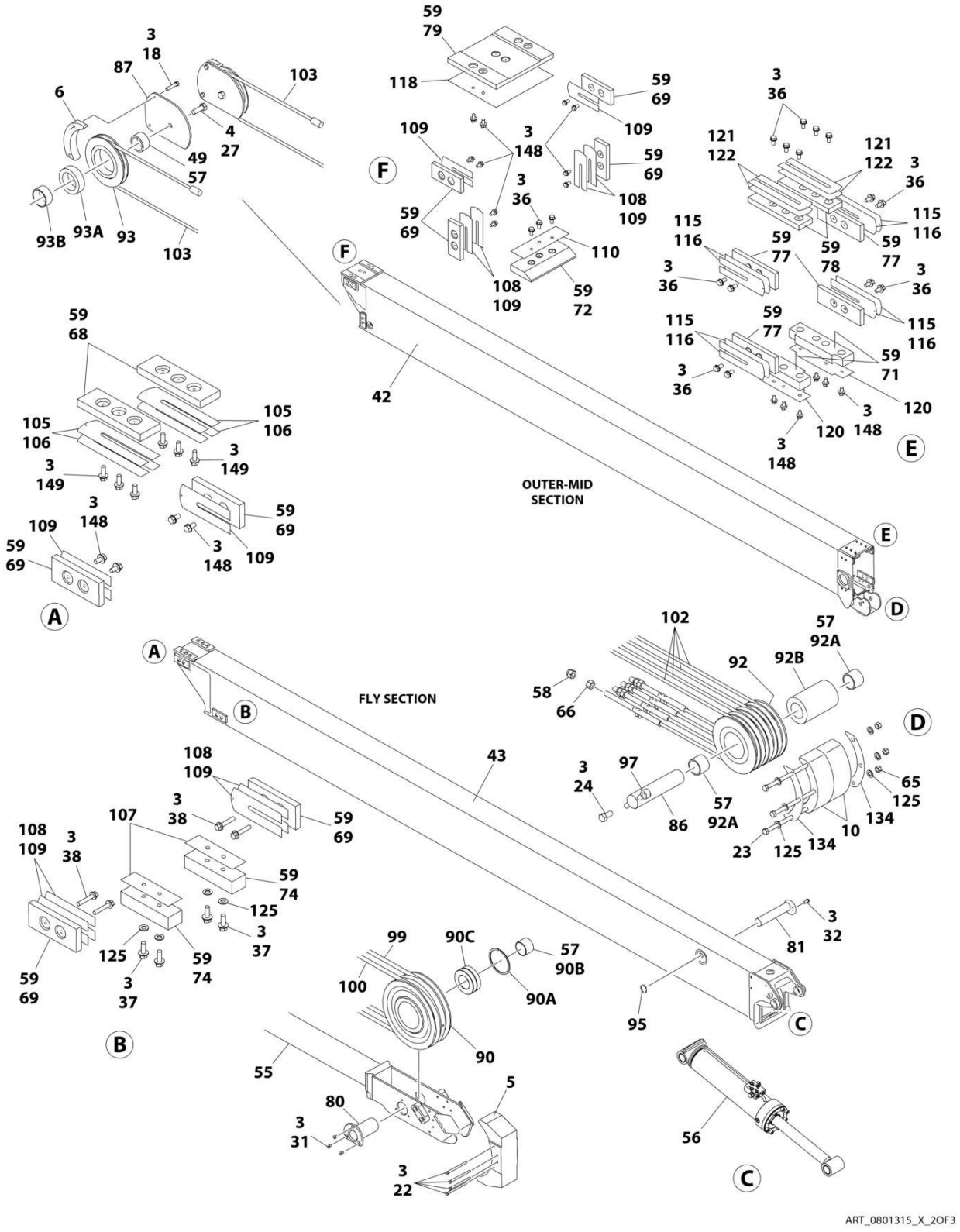
OUTER-MID SECTION
FLY SECTION
ART_0801315_X_2OF3

SECTION 4 - BOOM

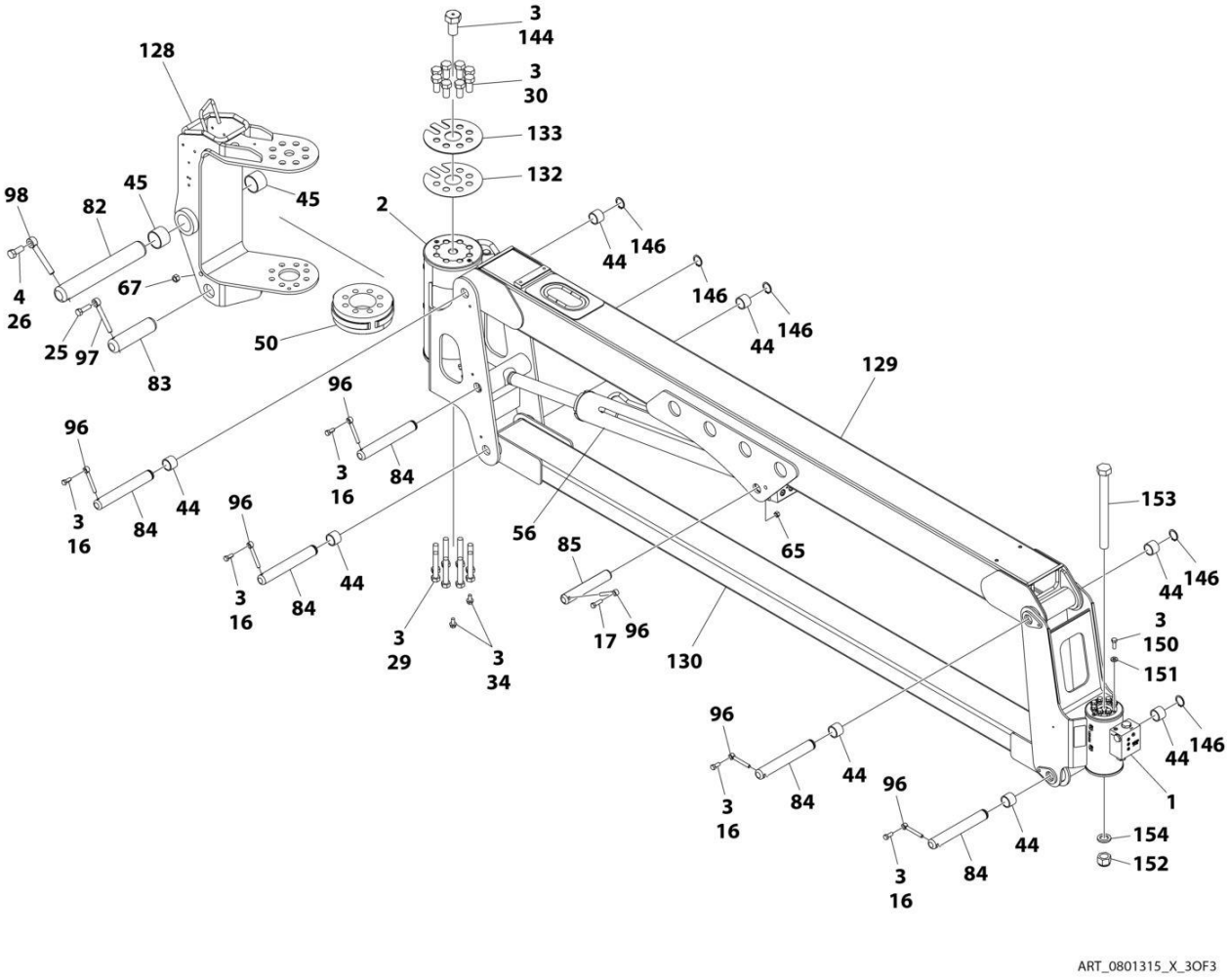

FIGURE 4-7. BOOM ASSEMBLY - WITHOUT COLD WEATHER PLUS PACKAGE (1350SJP)

ITEM	PART NUMBER	QTY	DESCRIPTION	REV
	0801315	Ref	BOOM ASSEMBLY - WITHOUT COLD WEATHER PLUS PACKAGE (1350SJP)	X
1	1001307712	1	Actuator Assembly (Platform Rotate) (See Separate Breakdown in this Section)	
2	1001178248	1	Actuator Assembly (Jib Rotate) (See Separate Breakdown in this Section)	
3	0100011	AR	Compound, Locking	
4	0100019	AR	Compound, Locking	
5	0561431	1	Block, Rope Retainer	
6	0561437	2	Block, Rope Retainer	
7	0561439	1	Block, Outer Mid Extend	
8	0561444	2	Block, Cable Retainer	
9	0561454	1	Block, Switch Adjuster	
10	0561457	2	Block, Cable Retainer	
11	0561458	2	Block, Cable Retainer	
12	0561471	2	Block, Spacer	
13	0561500	2	Block, Trunnion Keeper	
14	0561482	2	Block, Trunnion Keeper	
15	3340955	1	Pad	
16	0641607	5	Bolt 3/8 x 7/8	
17	0641610	1	Bolt 3/8 x 1-1/4	
18	0641615	4	Bolt 3/8 x 1-7/8	
19	0791618	4	Screw 3/8 x 2-1/4	
20	0791620	10	Screw 3/8 x 2-1/2	
21	0791624	4	Screw 3/8 x 3	
22	0641646	4	Bolt 3/8 x 5-3/4	
23	0641652	3	Bolt 3/8 x 6-1/2	
24	0641808	1	Bolt 1/2 x 1	
25	0641813	1	Bolt 1/2 x 1-5/8	
26	0642012	1	Bolt 5/8 x 1-1/2	
27	0642014	4	Bolt 5/8 x 1-3/4	
28	0642022	2	Bolt 5/8 x 2-3/4	
29	0682028	8	Bolt 5/8 x 3-1/2 Grade 8	
30	0682212	8	Bolt 3/4 x 1-1/2 Grade 8	
31	0741606	3	Screw 3/8 x 3/4	
32	0741806	1	Screw 1/2 x 3/4	
33	0791604	4	Screw 3/8 x 1/2	
34	0791606	2	Screw 3/8 x 3/4	
36	0811608	43	Screw 3/8 x 1	
37	0811610	10	Screw 3/8 x 1-1/4	
38	0811614	4	Screw 3/8 x 1-3/4	
39	0811616	6	Screw 3/8 x 2	
40	0801301	1	Base, Boom	
41	0801302	1	Mid, Inner	
42	0801303	1	Mid, Outer	
43	0801304	1	Fly, Boom	
44	0961951	8	Bushing (Part of Item 129 & 130)	
45	0962224	2	Bearing	
46	0791612	4	Screw 3/8 x 1-1/2	
47	0962297	2	Bushing	

ITEM	PART NUMBER	QTY	DESCRIPTION	REV
48	0962409	2	Bushing	
49	0962410	2	Bushing	
50	1100131	1	Cam	
52	1671032	1	Cover	
53	1671033	1	Cover	
54	1001251021	1	Telescope Cylinder Assembly (See Separate Breakdown in CYLINDER Section)	
55	1001251023	1	Platform Level Cylinder Assembly (See Separate Breakdown in CYLINDER Section)	
56	1001251025	1	Jib Cylinder Assembly (See Separate Breakdown in CYLINDER Section)	
57	3020039	AR	Lubricant, Moly	
58	3300239	4	Nut, Nylon Insert	
59	3020042	AR	Lubricant with PTFE	
60	3300458	1	Nut 1	
62	3300460	2	Nut 1-1/4	
63	3300461	3	Nut 1-3/8	
65	3311605	7	Nut 3/8	
66	3311801	4	Nut 1/2	
67	3311805	1	Nut 1/2	
68	3340871	2	Pad, Wear	
69	3340881	12	Pad, Wear	
70	3340910	1	Pad, Wear	
71	3340912	2	Pad, Wear	
72	4700039	1	Pad, Wear	
73	3340916	2	Pad, Wear	
74	3340917	2	Pad, Wear	
75	3340918	2	Pad, Wear	
76	4700038	1	Pad, Wear	
77	3340921	12	Pad, Wear	
78	3340922	6	Pad, Wear	
79	3340926	1	Pad, Wear	
80	3422926	1	Pin	
81	3422937	1	Pin	
82	1001119899	1	Pin	
83	3422956	1	Pin	
84	3422957	5	Pin	
85	3422958	1	Pin	
86	3422959	1	Pin	
87	3572950	2	Plate, Cable Retract Retainer	
88	3572951	2	Plate, Cable Retract Retainer	
89	3580342	2	Sheave	
90	1001154260	2	Sheave	
90A	1001154294	1	Ring, Snap	
90B	1001154304	1	Bushing (Inner)	
90C	1001154306	1	Bushing (Outer)	
91	3580298	2	Sheave	
91A	0962402	1	Bushing (Outer)	
91B	0962406	1	Bushing (Inner)	
92	3580300	1	Sheave	
92A	1001139972	1	Bushing (Inner)	
92B	0962403	1	Bushing (Outer)	

ITEM	PART NUMBER	QTY	DESCRIPTION	REV
93	3580302	1	Sheave	
93A	0962404	1	Bushing (Outer)	
93B	0962411	1	Bushing (Inner)	
94	3580341	2	Sheave	
95	3760233	1	Ring, Retaining	
96	3841143	6	Keeper, Pin	
97	3841203	2	Keeper, Pin	
98	3841258	1	Keeper, Pin	
99	3890029	1	Cable, Outer Mid Extend	
100	3890030	1	Cable, Outer Mid Extend	
101	3890031	2	Cable, Outer Mid Retract	
102	3890032	4	Cable, Fly Extend	
103	3890033	2	Cable, Fly Retract	
104	0641618	6	Screw 3/8 x 2-1/4	
105	4070863	2	Shim #11 Gauge	
106	4070864	2	Shim #18 Gauge	
107	4070895	2	Shim #16 Gauge	
108	4070897	6	Shim #18 Gauge	
109	4070898	12	Shim #11 Gauge	
110	4071012	1	Shim #16 Gauge	
112	4071015	2	Shim #16 Gauge	
114	4071017	1	Shim #16 Gauge	
115	4071018	8	Shim #16 Gauge	
116	4071019	12	Shim #11 Gauge	
117	4071024	1	Shim #16 Gauge	
118	4071025	1	Shim #16 Gauge	
120	4071027	2	Shim #16 Gauge	
121	4071028	6	Shim #16 Gauge	
122	4071029	6	Shim #11 Gauge	
123	4071031	4	Shim #16 Gauge	
124	4160197	1	Spring	
125	4711600	10	Washer 3/8	
126	4740509	2	Spacer	
127	4846453	1	Plate, Mounting	
128	4846462	1	Pivot	
129	4846482	1	Link, Jib (Upper) (Includes Item 44)	
130	0801550	1	Link, Jib (Lower) (Includes Item 44)	
131	4892000	2	Washer 5/8	
132	4071044	1	Shim #18 Gauge	
133	4071045	1	Shim #11 Gauge	
134	4071046	2	Shim #16 Gauge	
135	0363066	2	Bar, Stabilizer	
136	0962447	2	Bearing, Flanged	
137	3573437	1	Plate, Pulley Adjustment	
138	3580306	4	Pulley	
139	4568423	4	Tube, Spacer	
140	0641640	1	Bolt 3/8 x 5	
141	0641644	2	Bolt 3/8 x 5-1/2	
142	0791605	6	Screw 3/8 x 5/8	
143	3573444	6	Plate, Lock	
144	0630558	1	Bolt 1-1/8 x 2	

SECTION 4 - BOOM

ITEM	PART NUMBER	QTY	DESCRIPTION	REV
145	3311608	8	Nut 3/8	
146	3760133	5	Ring, Retaining	
148	0811606	30	Screw 3/8 x 3/4	
149	0811607	24	Screw 3/8 x 7/8	
150	0681608	8	Bolt 3/8 x 1	
151	4891600	8	Washer 3/8	
152	1001174040	1	Nut	
153	1001255133	1	Bolt 1 x 11	
154	4892600001	1	Washer 1	

SECTION 4 - BOOM

FIGURE 4-8. BOOM ASSEMBLY - WITH COLD WEATHER PLUS PACKAGE (1350SJP)

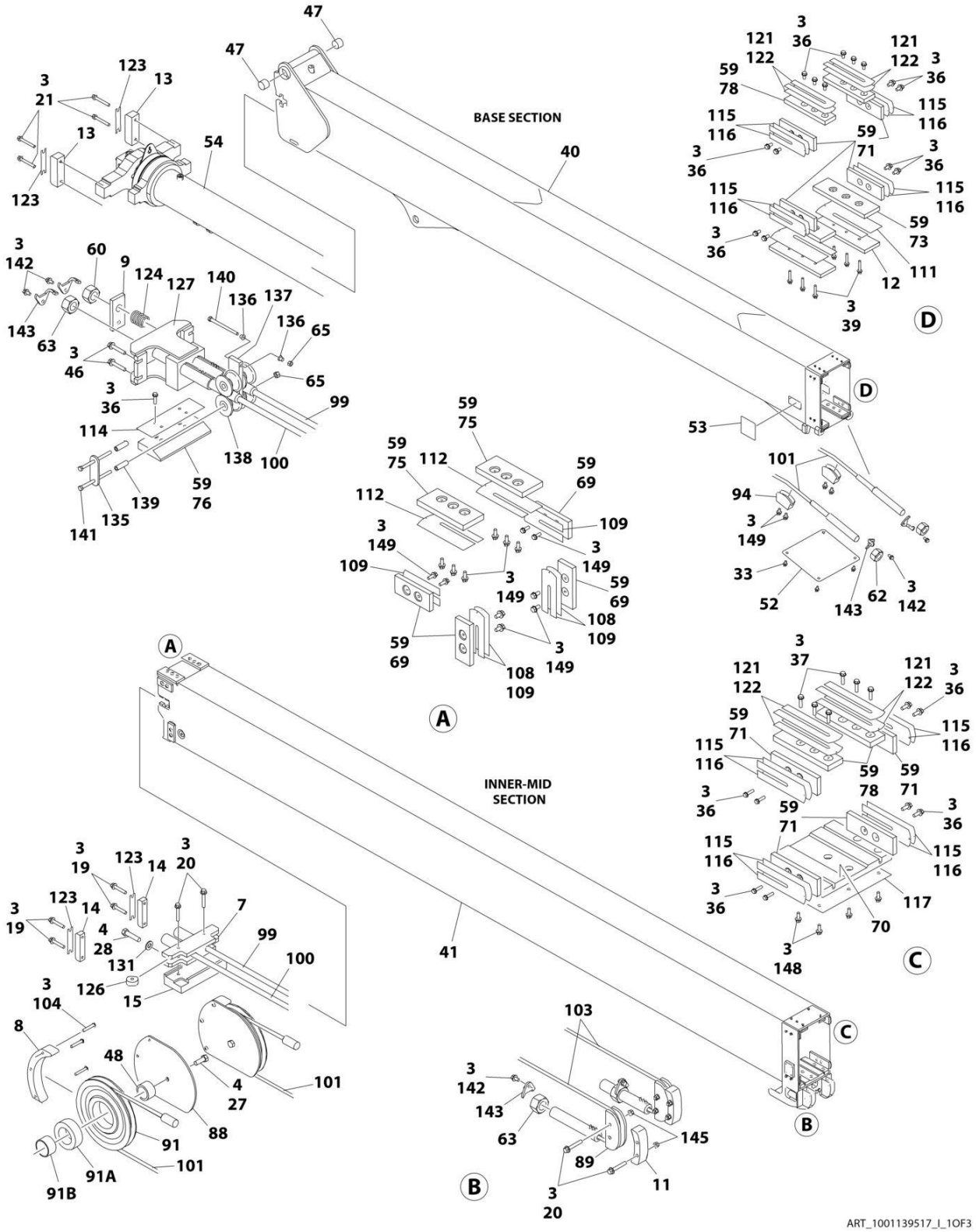

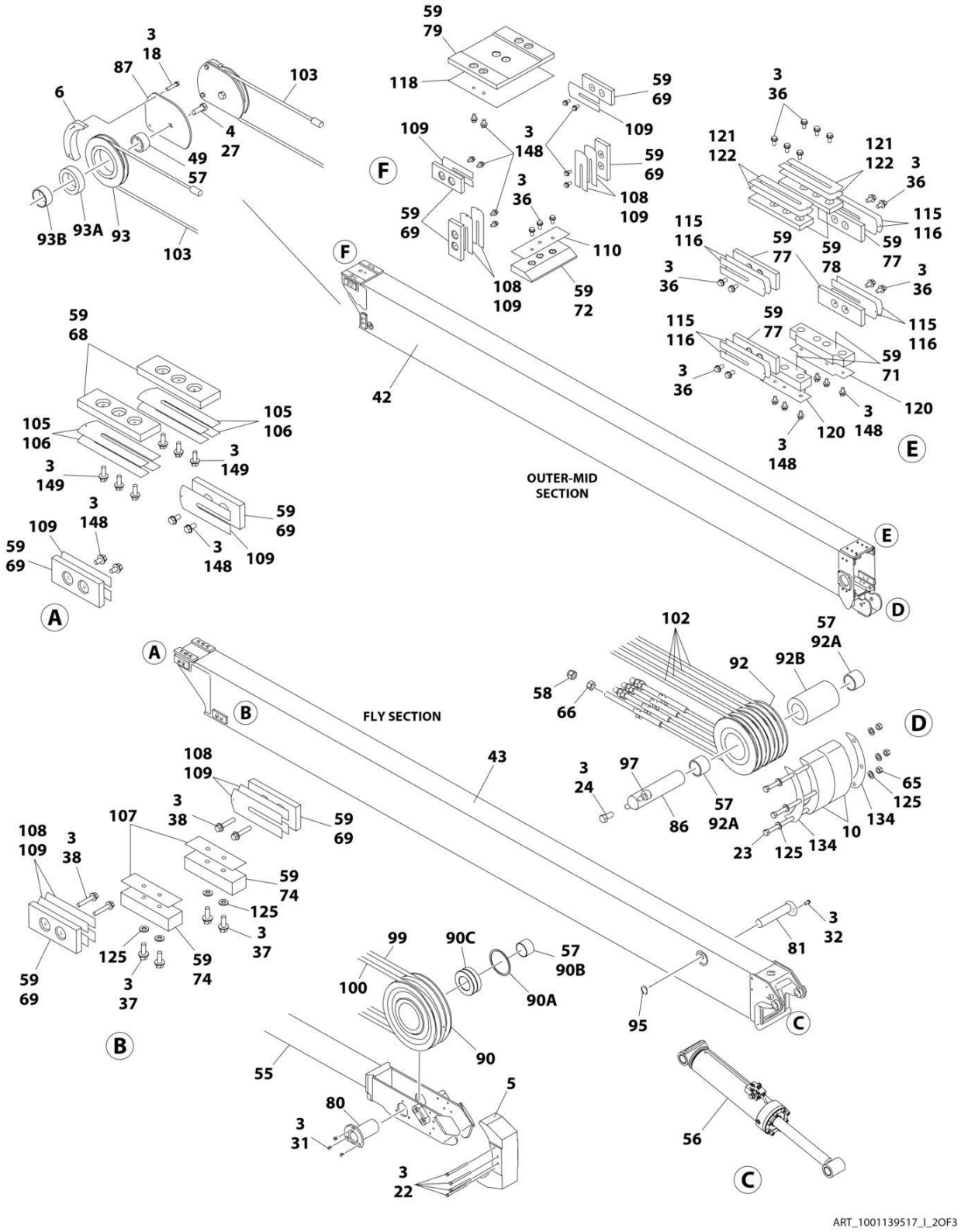
OUTER-MID SECTION
FLY SECTION
ART_1001139517_I_2OF3

SECTION 4 - BOOM

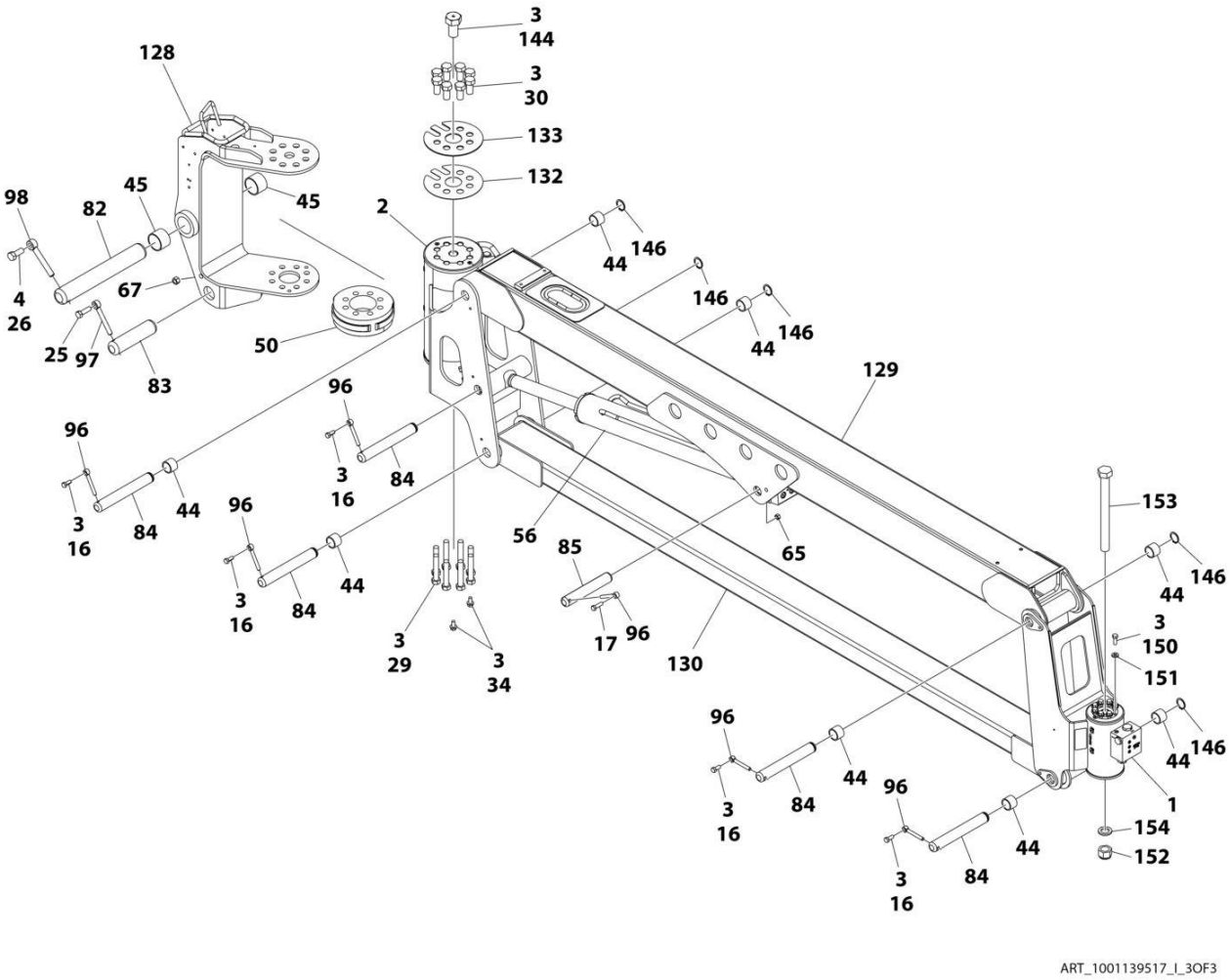

FIGURE 4-8. BOOM ASSEMBLY - WITH COLD WEATHER PLUS PACKAGE (1350SJP)

ITEM	PART NUMBER	QTY	DESCRIPTION	REV
	1001139517	Ref	BOOM ASSEMBLY - WITH COLD WEATHER PLUS PACKAGE (1350SJP)	I
1	1001307712	1	Actuator Assembly (Platform Rotate) (See Separate Breakdown in this Section)	
2	1001178248	1	Actuator Assembly (Jib Rotate) (See Separate Breakdown in this Section)	
3	0100011	AR	Compound, Locking	
4	0100019	AR	Compound, Locking	
5	0561431	1	Block, Rope Retainer	
6	0561437	2	Block, Rope Retainer	
7	0561439	1	Block, Outer Mid Extend	
8	0561444	2	Block, Cable Retainer	
9	0561454	1	Block, Switch Adjuster	
10	0561457	2	Block, Cable Retainer	
11	0561458	2	Block, Cable Retainer	
12	0561471	2	Block, Spacer	
13	0561500	2	Block, Trunnion Keeper	
14	0561482	2	Block, Trunnion Keeper	
15	3340955	1	Pad	
16	0641607	5	Bolt 3/8 x 7/8	
17	0641610	1	Bolt 3/8 x 1-1/4	
18	0641615	4	Bolt 3/8 x 1-7/8	
19	0791618	4	Screw 3/8 x 2-1/4	
20	0791620	10	Screw 3/8 x 2-1/2	
21	0791624	4	Screw 3/8 x 3	
22	0641646	4	Bolt 3/8 x 5-3/4	
23	0641652	3	Bolt 3/8 x 6-1/2	
24	0641808	1	Bolt 1/2 x 1	
25	0641813	1	Bolt 1/2 x 1-5/8	
26	0642012	1	Bolt 5/8 x 1-1/2	
27	0642014	4	Bolt 5/8 x 1-3/4	
28	0642022	2	Bolt 5/8 x 2-3/4	
29	0682028	8	Bolt 5/8 x 3-1/2 Grade 8	
30	0682212	8	Bolt 3/4 x 1-1/2 Grade 8	
31	0741606	3	Screw 3/8 x 3/4	
32	0741806	1	Screw 1/2 x 3/4	
33	0791604	4	Screw 3/8 x 1/2	
34	0791606	2	Screw 3/8 x 3/4	
36	0811608	43	Screw 3/8 x 1	
37	0811610	10	Screw 3/8 x 1-1/4	
38	0811614	4	Screw 3/8 x 1-3/4	
39	0811616	6	Screw 3/8 x 2	
40	0801301	1	Base, Boom	
41	0801302	1	Mid, Inner	
42	0801303	1	Mid, Outer	
43	0801304	1	Fly, Boom	
44	0961951	8	Bushing (Part of Item 129 & 130)	
45	0962224	2	Bearing	
46	0791612	4	Screw 3/8 x 1-1/2	
47	0962297	2	Bushing	

ITEM	PART NUMBER	QTY	DESCRIPTION	REV
48	0962409	2	Bushing	
49	0962410	2	Bushing	
50	1100131	1	Cam	
52	1671032	1	Cover	
53	1671033	1	Cover	
54	1001251021	1	Telescope Cylinder Assembly (See Separate Breakdown in CYLINDER Section)	
55	1001228053	1	Platform Level Cylinder Assembly (See Separate Breakdown in CYLINDER Section)	
56	1001251025	1	Jib Cylinder Assembly (See Separate Breakdown in CYLINDER Section)	
57	3020039	AR	Lubricant, Moly	
58	3300239	4	Nut, Nylon Insert	
59	3020042	AR	Lubricant with PTFE	
60	3300458	1	Nut 1	
62	3300460	2	Nut 1-1/4	
63	3300461	3	Nut 1-3/8	
65	3311605	7	Nut 3/8	
66	3311801	4	Nut 1/2	
67	3311805	1	Nut 1/2	
68	3340871	2	Pad, Wear	
69	3340881	12	Pad, Wear	
70	3340910	1	Pad, Wear	
71	3340912	2	Pad, Wear	
72	4700039	1	Pad, Wear	
73	3340916	2	Pad, Wear	
74	3340917	2	Pad, Wear	
75	3340918	2	Pad, Wear	
76	4700038	1	Pad, Wear	
77	3340921	12	Pad, Wear	
78	3340922	6	Pad, Wear	
79	3340926	1	Pad, Wear	
80	3422926	1	Pin	
81	3422937	1	Pin	
82	1001119899	1	Pin	
83	3422956	1	Pin	
84	3422957	5	Pin	
85	3422958	1	Pin	
86	3422959	1	Pin	
87	3572950	2	Plate, Cable Retract Retainer	
88	3572951	2	Plate, Cable Retract Retainer	
89	3580342	2	Sheave	
90	1001154260	2	Sheave	
90A	1001154294	1	Ring, Snap	
90B	1001154304	1	Bushing (Inner)	
90C	1001154306	1	Bushing (Outer)	
91	3580298	2	Sheave	
91A	0962402	1	Bushing (Outer)	
91B	0962406	1	Bushing (Inner)	
92	3580300	1	Sheave	
92A	1001139972	1	Sleeve, Bushing (Inner)	
92B	0962403	1	Bushing (Outer)	

ITEM	PART NUMBER	QTY	DESCRIPTION	REV
93	3580302	2	Sheave	
93A	0962404	1	Bushing (Outer)	
93B	0962411	1	Bushing (Inner)	
94	3580341	2	Sheave	
95	3760233	1	Ring, Retaining	
96	3841143	6	Keeper, Pin	
97	3841203	2	Keeper, Pin	
98	3841258	1	Keeper, Pin	
99	3890029	1	Cable, Outer Mid Extend	
100	3890030	1	Cable, Outer Mid Extend	
101	3890031	2	Cable, Outer Mid Retract	
102	3890032	4	Cable, Fly Extend	
103	3890033	2	Cable, Fly Retract	
104	0641618	6	Screw 3/8 x 2-1/4	
105	4070863	2	Shim #11 Gauge	
106	4070864	2	Shim #18 Gauge	
107	4070895	2	Shim #16 Gauge	
108	4070897	6	Shim #18 Gauge	
109	4070898	12	Shim #11 Gauge	
110	4071012	1	Shim #16 Gauge	
111	4071013	2	Shim #16 Gauge	
112	4071015	2	Shim #16 Gauge	
114	4071017	1	Shim #16 Gauge	
115	4071018	8	Shim #16 Gauge	
116	4071019	12	Shim #11 Gauge	
117	4071024	1	Shim #16 Gauge	
118	4071025	1	Shim #16 Gauge	
120	4071027	2	Shim #16 Gauge	
121	4071028	6	Shim #16 Gauge	
122	4071029	6	Shim #11 Gauge	
123	4071031	4	Shim #16 Gauge	
124	4160197	1	Spring	
125	4711600	10	Washer 3/8	
126	4740509	2	Spacer	
127	4846453	1	Plate, Mounting	
128	4846462	1	Pivot	
129	4846482	1	Link, Jib (Upper) (Includes Item 44)	
130	0801550	1	Link, Jib (Lower) (Includes Item 44)	
131	4892000	2	Washer 5/8	
132	4071044	1	Shim #18 Gauge	
133	4071045	1	Shim #11 Gauge	
134	4071046	2	Shim #16 Gauge	
135	0363066	2	Bar, Stabilizer	
136	0962447	2	Bearing, Flanged	
137	3573437	1	Plate, Pulley Adjustment	
138	3580306	4	Pulley	
139	4568423	4	Tube, Spacer	
140	0641640	1	Bolt 3/8 x 5	
141	0641644	2	Bolt 3/8 x 5-1/2	
142	0791605	6	Screw 3/8 x 5/8	
143	3573444	6	Plate, Lock	

SECTION 4 - BOOM

ITEM	PART NUMBER	QTY	DESCRIPTION	REV
144	0630558	1	Bolt 1 x 2	
145	3311608	8	Nut 3/8	
146	3760133	5	Ring, Retaining	
148	0811606	30	Screw 3/8 x 3/4	
149	0811607	24	Screw 3/8 x 7/8	
150	0681608	8	Bolt 3/8 x 1	
151	4891600	8	Washer 3/8	
152	1001174040	1	Nut	
153	1001255133	1	Bolt 1 x 11	
154	4892600001	1	Washer 1	

FIGURE 4-9. WIRE ROPE TOOLS INSTALLATION (OPTIONAL)

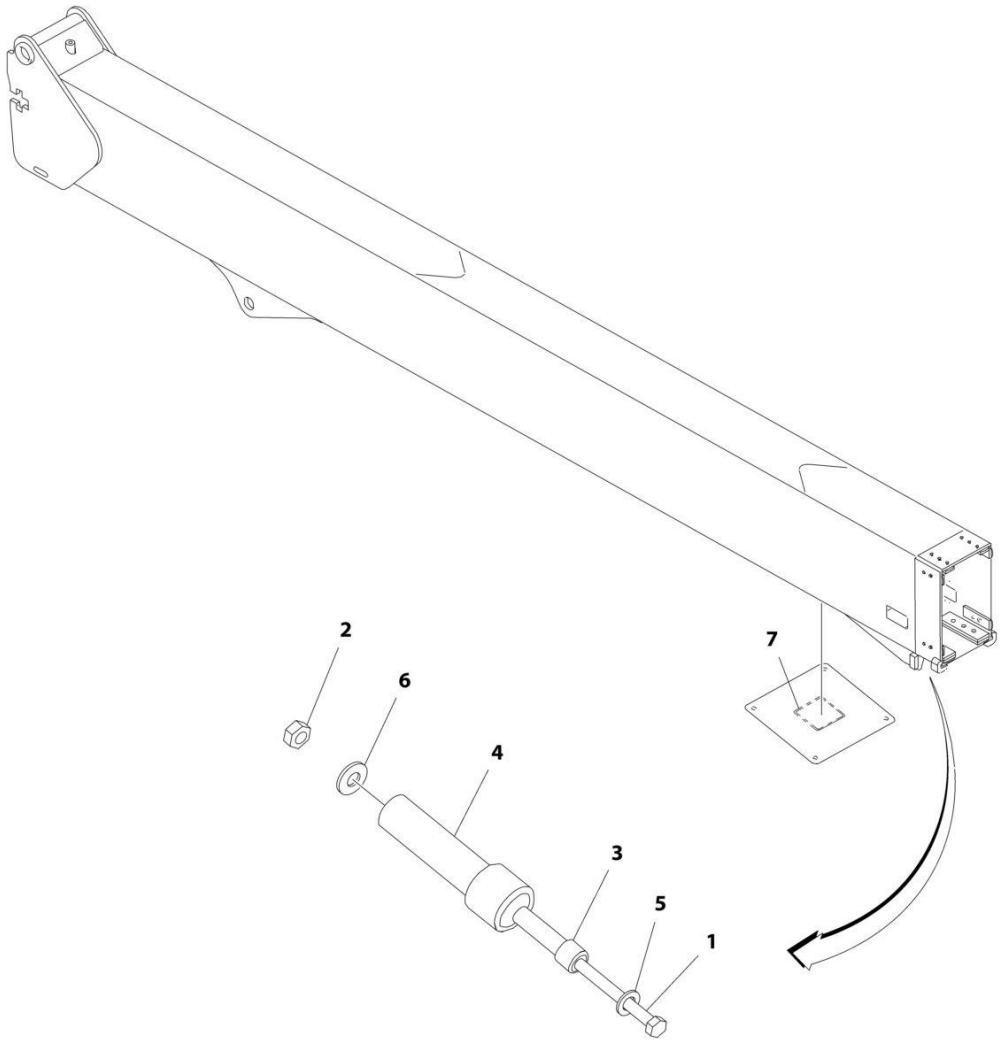

FIGURE 4-9. WIRE ROPE TOOLS INSTALLATION (OPTIONAL)

ITEM	PART NUMBER	QTY	DESCRIPTION	REV
	0272048	Ref	WIRE ROPE TOOLS INSTALLATION (OPTIONAL)	B
1	0641676	1	Bolt 3/8 x 9-1/2	
2	3311605	1	Nut 3/8	
3	4120040	1	Socket 3/4	
4	4120043	1	Socket 2	
5	4711600	1	Washer 3/8	
6	4891600	1	Washer 3/8	
7	1705307	1	Decal - Tool Location	

FIGURE 4-10. PLATFORM ROTATOR ASSEMBLY

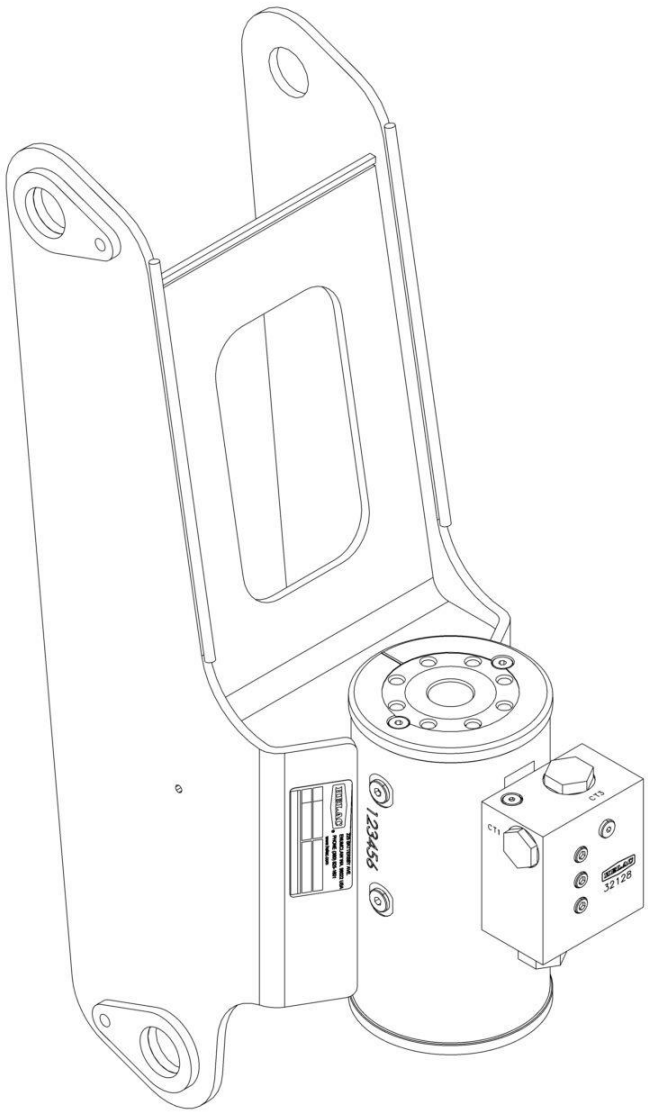

ART_1001307712

FIGURE 4-10. PLATFORM ROTATOR ASSEMBLY

ITEM	PART NUMBER	QTY	DESCRIPTION	REV
	1001307712	Ref	PLATFORM ROTATOR ASSEMBLY	A
	See Note	NSS	Note: No Service Parts Available at Time of Printing	

FIGURE 4-11. JIB ROTATE ASSEMBLY

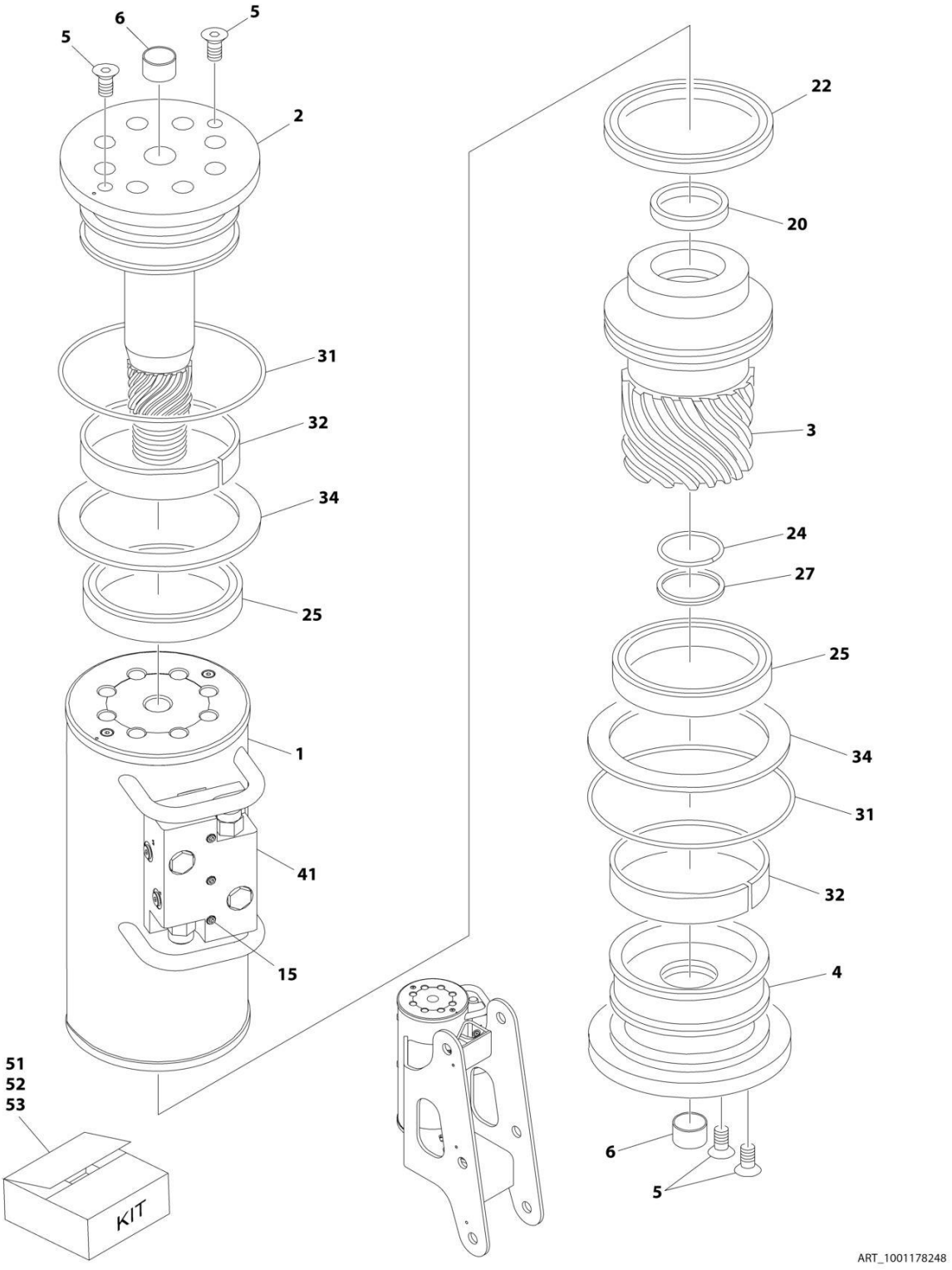

FIGURE 4-11. JIB ROTATE ASSEMBLY

ITEM	PART NUMBER	QTY	DESCRIPTION	REV
	1001178248	Ref	JIB ROTATE ASSEMBLY	A
1	See Note	NSS	Case/Bracket Weldment (Note: Not Available - Purchase Complete Assembly)	
2	7017162	1	Shaft	
3	7017163	1	Sleeve, Piston	
4	7017164	1	Cap, End	
5	See Note	AR	Screw (Note: See Item 53 for Replacement)	
5	See Note	AR	Dowel Pin (Note: See Item 53 for Replacement)	
6	7017195	2	Bushing	
15	See Note	NSS	Capscrew 1/4 x 1-1/2 Grade 8 (Note: Not Available for Purchase)	
20	See Note	1	Seal, Rod (Note: See Item 51 for Replacement Options)	
22	See Note	1	Seal, Piston (Note: See Item 51 for Replacement Options)	
24	See Note	1	Seal, Cap (Note: See Item 51 for Replacement Options)	
25	See Note	2	Packing, Bearing (Note: See Item 51 for Replacement Options)	
27	See Note	1	Ring, Cap Back-up (Note: See Item 51 for Replacement Options)	
31	See Note	2	Seal (Note: See Item 51 for Replacement Options)	
32	See Note	2	Bearing, Shaft (Note: See Item 52 for Replacement)	
34	See Note	2	Thrustwasher (Note: See Item 52 for Replacement)	
41	70002859	1	Motion Control Valve Assembly (Cartridges not serviced separately)	
51	70000796	1	Seal Kit (Includes Items 20, 22, 24, 25, 27 & 31)	
52	7017185	1	Bearing Kit (Includes Items 32 & 34)	
53	70001640	1	Hardware Kit (Includes Item 5 and Plugs)	

FIGURE 4-12. POWER TRACK INSTALLATION (1200SJP)

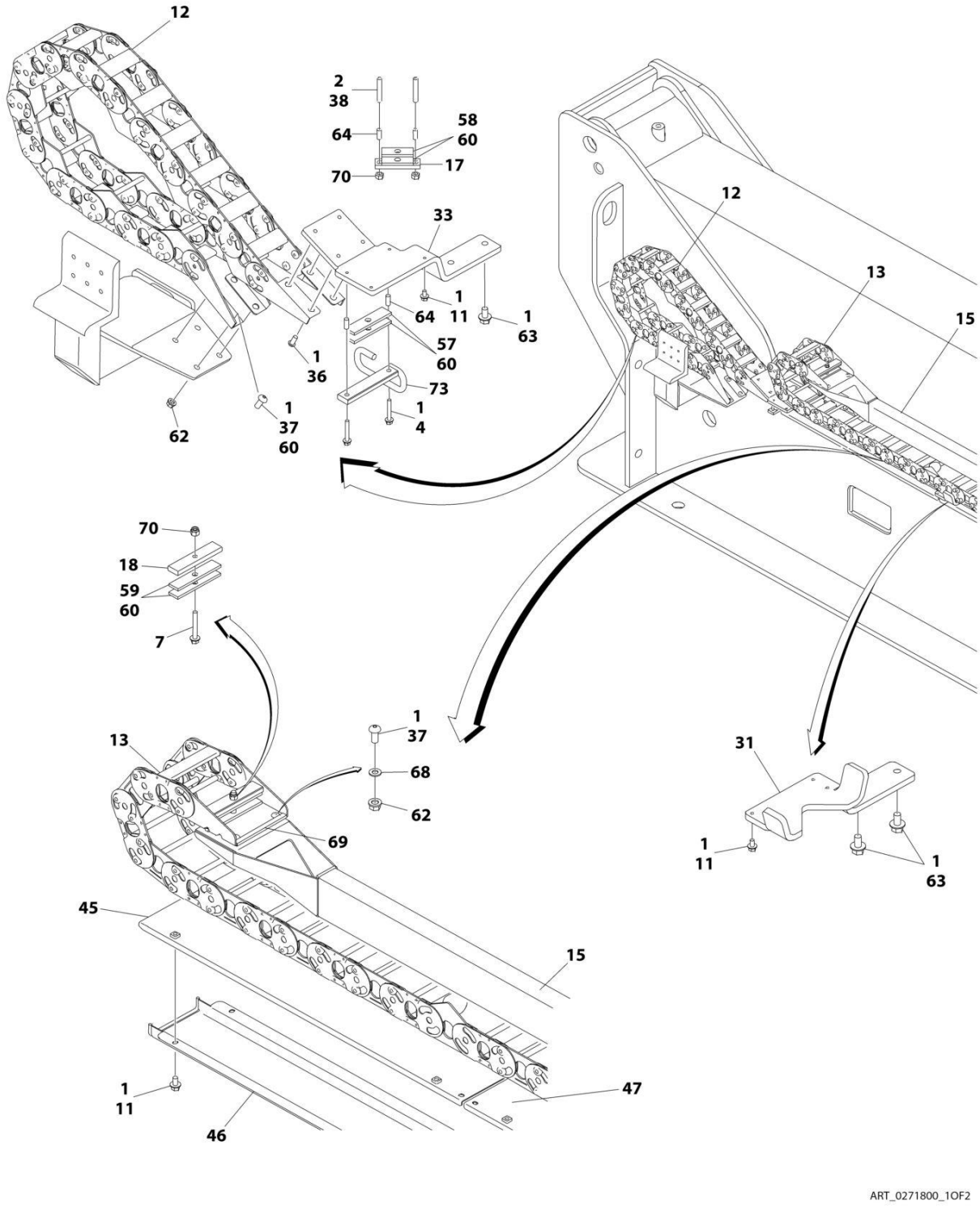

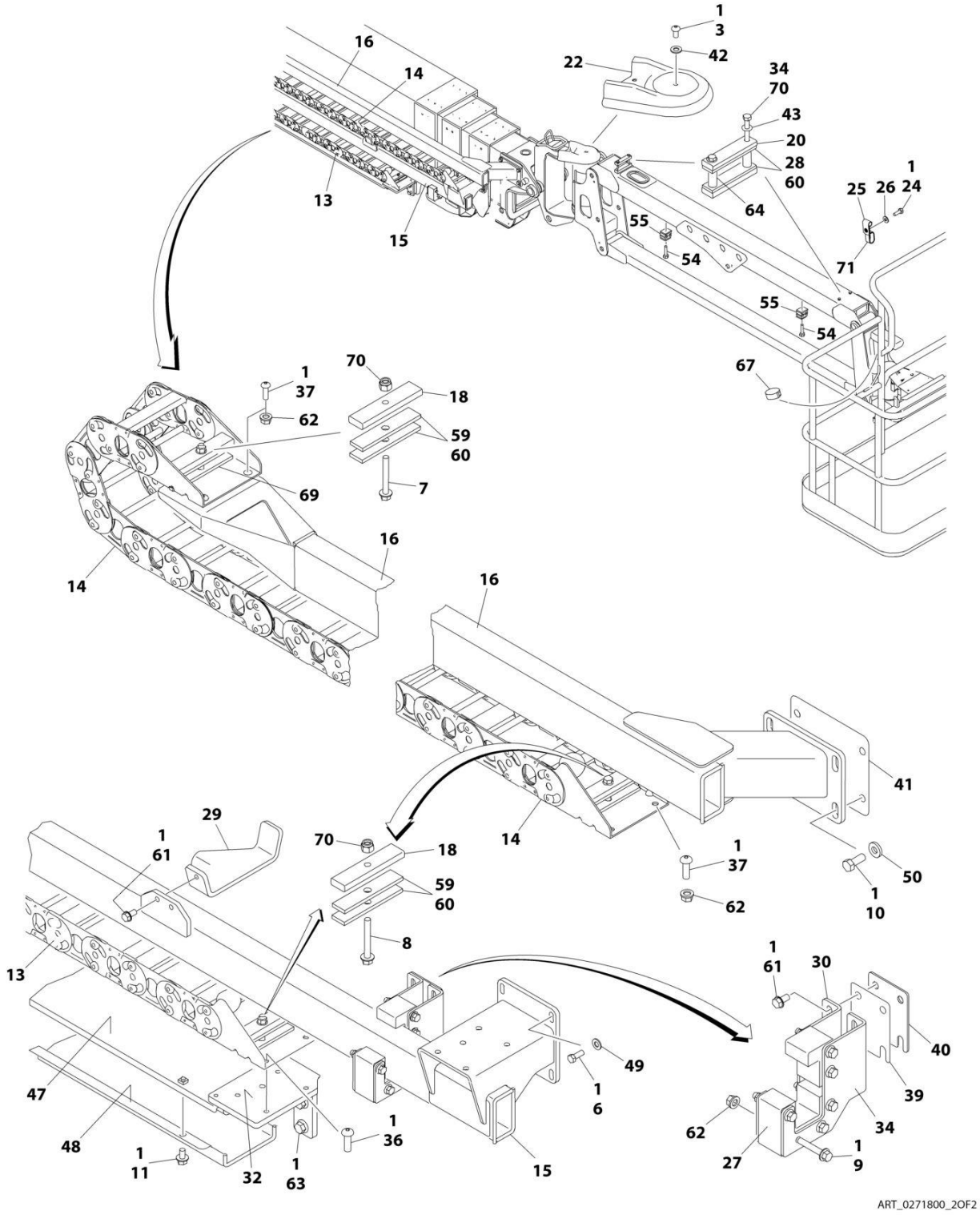
1
3
42
22
16
14
13
15
34
70
43
20
28
60
64
1
25
26
24
55
54
71
55
54
67
70
1
37
62
18
59
60
7
69
14
16
16
41
29
1
61
70
18
59
60
14
1
37
62
50
1
10
8
13
1
61
30
40
49
1
6
39
47
48
1
11
32
1
63
1
36
15
62
34
27
1
9
ART_0271800_2OF2

FIGURE 4-12. POWER TRACK INSTALLATION (1200SJP)

ITEM	PART NUMBER	QTY	DESCRIPTION	REV
	0271800	Ref	POWER TRACK INSTALLATION	Q
1	0100011	AR	Compound, Locking	
2	0100019	AR	Compound, Locking	
3	0630467	3	Screw 5/16 x 1/2	
4	0791518	2	Screw 5/16 x 2-1/4	
6	0641608	4	Bolt 3/8 x 1	
7	0791620	2	Screw 3/8 x 2-1/2	
8	0791622	2	Screw 3/8 x 2-3/4	
9	0791624	6	Screw 3/8 x 3	
10	0641810	4	Bolt 1/2 x 1-1/4	
11	0791504	48	Screw 5/16 x 1/2	
12	1001131620	Ref	Carrier (T/T to Boom)	
12	70003917	AR	Section Repair Kit (Includes Inner and Outer Links, Joining Bars and Rollers and Assembling Hardware)	
12	70003918	1	Mounting Bracket Kit (Includes Mounting Brackets for Both Ends, 1 Roller Assembly and Assembling Hardware)	
13	1001131734	1	Carrier (Lower)	
13	70003913	AR	Section Repair Kit (Includes Inner and Outer Links, Joining Bars and Rollers and Assembling Hardware)	
13	70003915	1	Mounting Bracket Kit (Includes Mounting Brackets for Both Ends, 1 Roller Assembly and Assembling Hardware)	
13	70003914	AR	Center Bracket Kit (Includes 1 Flat Bar, 1 Round Bar, 1 Roller and Assembling Hardware)	
14	1001131729	1	Carrier (Upper)	
14	70003913	AR	Section Repair (Includes Inner and Outer Links, Joining Bars and Rollers and Assembling Hardware)	
14	70003915	1	Mounting Bracket Kit (Includes Mounting Brackets for Both Ends, 1 Roller Assembly and Assembling Hardware)	
14	70003914	AR	Center Bracket Kit (Includes 1 Flat Bar, 1 Round Bar, 1 Roller and Assembling Hardware)	
15	1180369	1	Tube, Push (Lower)	
16	1180370	1	Tube, Push (Upper)	
17	1320277	1	Clamp, Hose	
18	1320294	4	Clamp, Bar	
20	1320296	3	Clamp, Bar	
22	1671043	1	Cover, Jib Pivot	
24	0641406	1	Screw 1/4 x 3/4	
25	1320263	1	Clamp, Cable	
26	4711400	1	Washer 1/4	
27	3340925	1	Pad	
28	3340934	4	Pad, Clamp	
29	3573016	3	Support, Track	
30	3573179	2	Plate, Mounting	
31	3573181	4	Support, Track	
32	3573194	1	Plate, Track Mounting	
33	3573210	1	Plate, Track Mounting	
34	3900260	4	Capscrew 3/8 x 4	
36	3900283	8	Screw 3/8 x 3/4	
37	3900316	16	Screw 3/8 x 1	
38	3951620	2	Setscrew 3/8 x 2-1/2	
39	4071021	1	Shim, Adjusting 16Ga	

ITEM	PART NUMBER	QTY	DESCRIPTION	REV
40	4071022	1	Shim, Adjusting 11Ga	
41	4071023	1	Shim, Adjusting 11Ga	
42	4711500	3	Washer 5/16	
43	4711600	4	Washer 3/8	
45	4846431	1	Cover, Cable (Front)	
46	4846485	1	Support, Cable (Front)	
47	4846515	4	Cover, Cable (Rear)	
48	4846516	4	Support, Cable (Rear)	
49	4891600	4	Washer 3/8	
50	4891800	4	Washer 1/2	
54	0641510	2	Bolt 5/16 x 1-1/4	
55	1320159	2	Clamp	
56	4240018	10	Tie-Strap (Not Shown)	
57	3340940	2	Pad, Rubber	
58	3340941	2	Pad, Rubber	
59	3340942	8	Pad, Rubber	
60	0100081	AR	Adhesive #454	
61	0791607	10	Screw 3/8 x 7/8	
62	3311608	22	Nut 3/8	
63	0791808	12	Screw 1/2 x 1	
64	4562516	AR	Tubing, Poly	
66	4240155	4	Strap, 8 Cinch (Not Shown)	
67	4240156	1	Strap, 12 Cinch	
68	4751500	4	Washer 5/16	
69	4060804	11 in /28cm	Shield, Flex Trim 3/16	
70	3300492	8	Nut, Nylon Insert	
71	1321385	1	Clamp, Hose	
72	4240153	1	Strap, 4 Cinch (Not Shown)	
73	1001212790	1	Clamp	

FIGURE 4-13. POWER TRACK INSTALLATION (1350SJP)

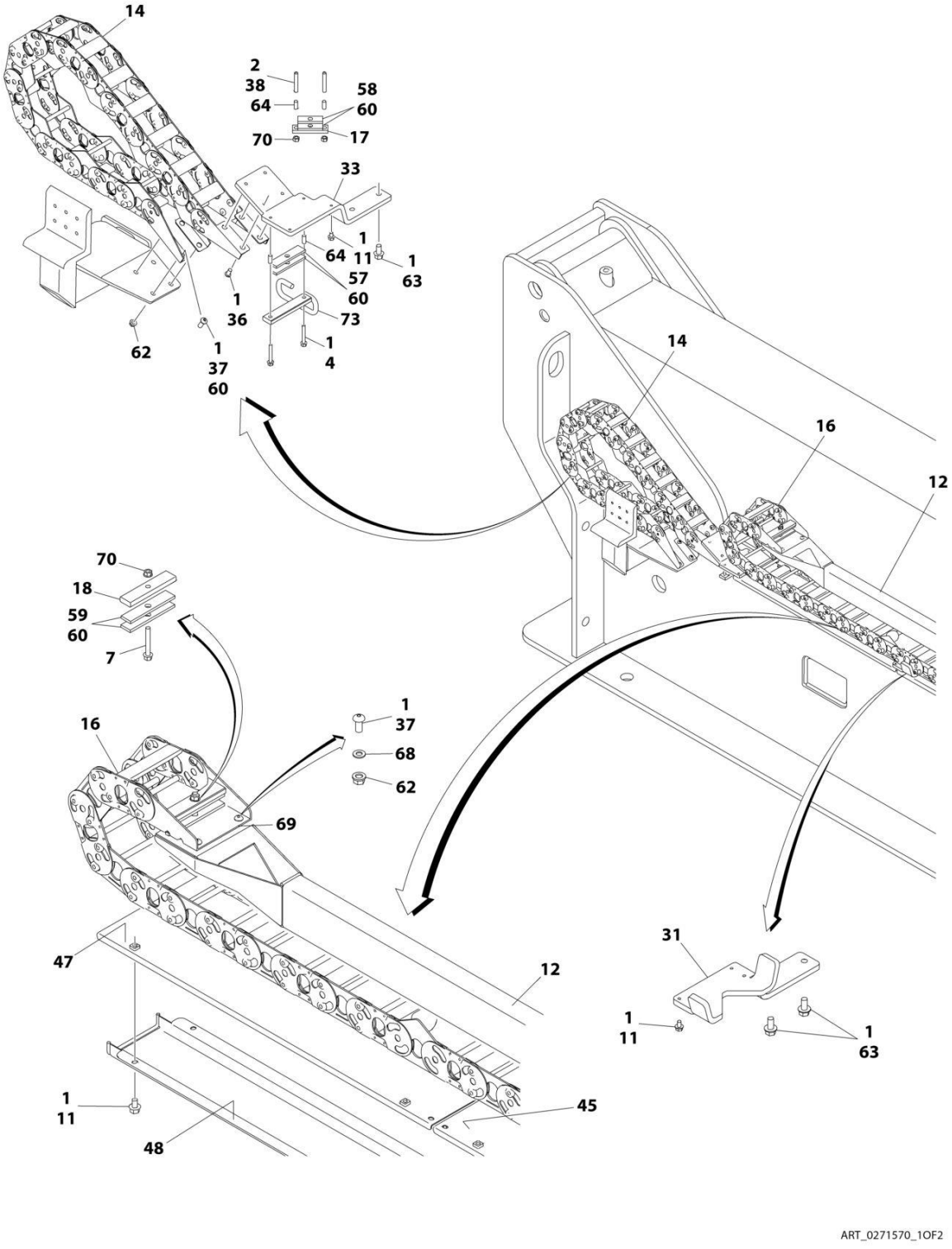

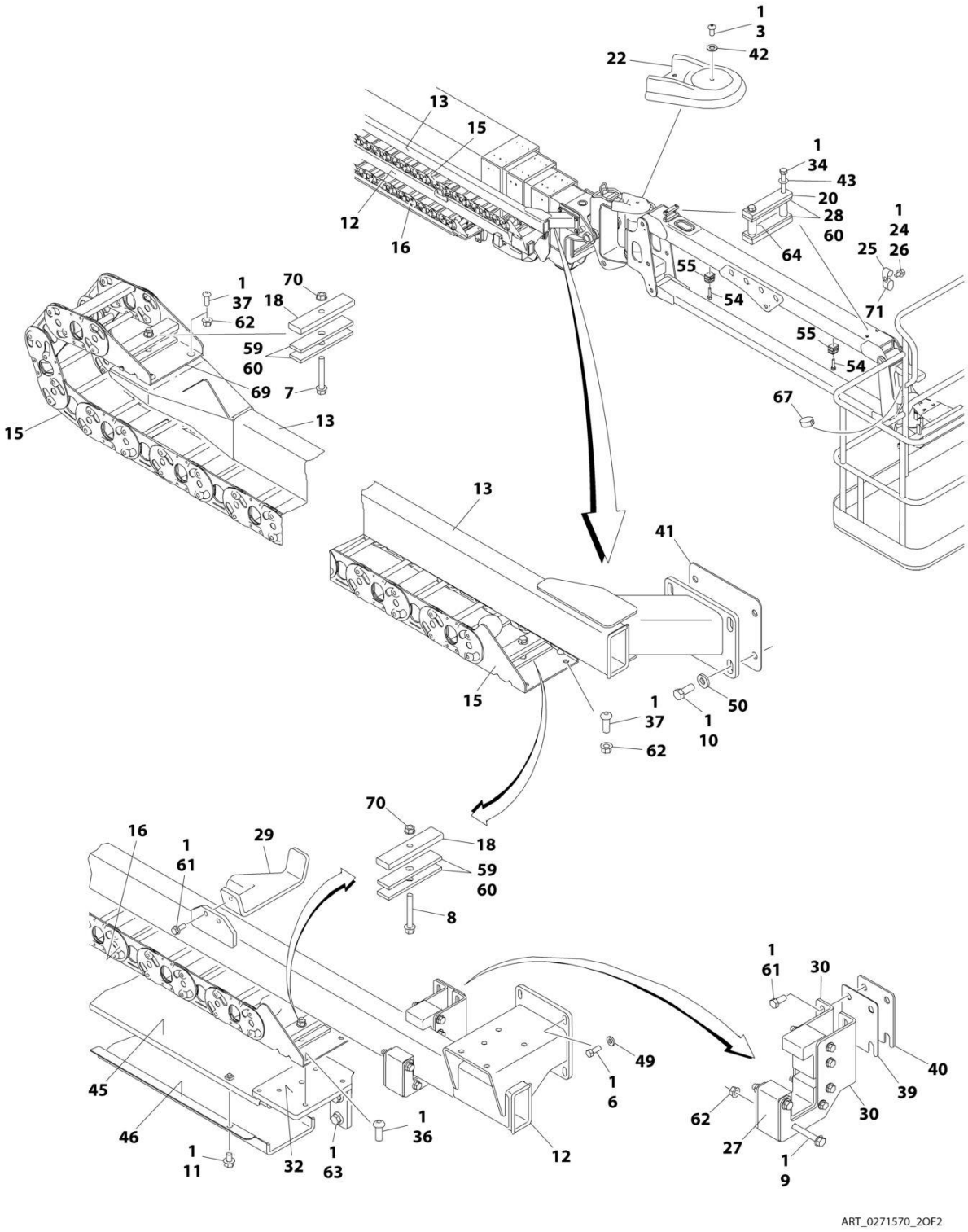

ART_0271570_2OF2

FIGURE 4-13. POWER TRACK INSTALLATION (1350SJP)

ITEM	PART NUMBER	QTY	DESCRIPTION	REV
	0271570	Ref	POWER TRACK INSTALLATION	R
1	0100011	AR	Compound, Locking	
2	0100019	AR	Compound, Locking	
3	0630467	3	Screw 5/16 x 1/2	
4	0791518	2	Screw 5/16 x 2-1/4	
6	0641608	4	Bolt 3/8 x 1	
7	0791620	2	Screw 3/8 x 2-1/2	
8	0791622	2	Screw 3/8 x 2-3/4	
9	0791624	6	Screw 3/8 x 3	
10	0641810	4	Bolt 1/2 x 1-1/4	
11	0791504	58	Screw 5/16 x 1/2	
12	1180362	1	Tube, Push (Lower)	
13	1180363	1	Tube, Push (Upper)	
14	1001131620	1	Carrier (T/T to Boom)	
14	70003917	AR	Section Repair Kit (Includes Inner and Outer Links, Joining Bars and Rollers and Assembling Hardware)	
14	70003918	1	Mounting Bracket Kit (Includes Mounting Brackets for Both Ends, 1 Roller Assembly and Assembling Hardware)	
15	1001131728	1	Carrier (Upper)	
15	70003913	AR	Section Repair Kit (Includes Inner and Outer Links, Joining Bars and Rollers and Assembling Hardware)	
15	70003915	1	Mounting Bracket Kit (Includes Mounting Brackets for Both Ends, 1 Roller Assembly and Assembling Hardware)	
15	70003914	AR	Center Bracket Kit (Includes 1 Flat Bar, 1 Round Bar, 1 Roller and Assembling Hardware)	
16	1001131733	1	Carrier (Lower)	
16	70003913	AR	Section Repair Kit (Includes Inner and Outer Links, Joining Bars and Rollers and Assembling Hardware)	
16	70003915	1	Mounting Bracket Kit (Includes Mounting Brackets for Both Ends, 1 Roller Assembly and Assembling Hardware)	
16	70003914	AR	Center Bracket Kit (Includes 1 Flat Bar, 1 Round Bar, 1 Roller and Assembling Hardware)	
17	1320277	1	Clamp, Hose	
18	1320294	4	Clamp, Bar	
20	1320296	3	Clamp, Bar	
22	1671043	1	Cover, Jib Pivot	
24	0641406	1	Screw 1/4 x 3/4	
25	1320263	1	Clamp, Cable	
26	4711400	1	Washer 1/4	
27	3340925	1	Pad	
28	3340934	4	Pad, Clamp	
29	3573016	3	Support, Track	
30	3573179	2	Plate, Mounting	
31	3573181	5	Support, Track	
32	3573194	1	Plate, Track Mounting	
33	3573210	1	Plate, Track Mounting	
34	3900260	4	Capscrew 3/8 x 4	
36	3900283	8	Screw 3/8 x 3/4	
37	3900316	16	Screw 3/8 x 1	
38	3951620	2	Setscrew 3/8 x 2-1/2	
39	4071021	1	Shim, Adjusting 16Ga	

ITEM	PART NUMBER	QTY	DESCRIPTION	REV
40	4071022	1	Shim, Adjusting 11Ga	
41	4071023	1	Shim, Adjusting 11Ga	
42	4711500	3	Washer 5/16	
43	4711600	4	Washer 3/8	
45	4846423	5	Cover, Cable (Rear)	
46	4846429	5	Support, Cable (Rear)	
47	4846431	1	Cover, Cable (Front)	
48	4846485	1	Support, Cable (Front)	
49	4891600	4	Washer 3/8	
50	4891800	4	Washer 1/2	
54	0641510	2	Bolt 5/16 x 1-1/4	
55	1320159	2	Clamp	
56	4240018	10	Tie-Strap (Not Shown)	
57	3340940	2	Pad, Rubber	
58	3340941	2	Pad, Rubber	
59	3340942	8	Pad, Rubber	
60	0100081	AR	Adhesive #454	
61	0791607	10	Screw 3/8 x 7/8	
62	3311608	22	Nut 3/8	
63	0791808	14	Screw 1/2 x 1	
64	4562516	AR	Tubing, Poly	
66	4240155	4	Strap, 8 Cinch (Not Shown)	
67	4240156	1	Strap, 12 Cinch	
68	4751500	4	Washer 5/16	
69	4060804	11 in /28cm	Shield, Flex Trim 3/16	
70	3300492	8	Nut, Nylon Insert	
71	1321385	1	Clamp, Hose	
72	4240153	1	Strap, 4 Cinch (Not Shown)	
73	1001212790	1	Clamp	

FIGURE 4-14. BOOM SENSORS AND SWITCHES INSTALLATION

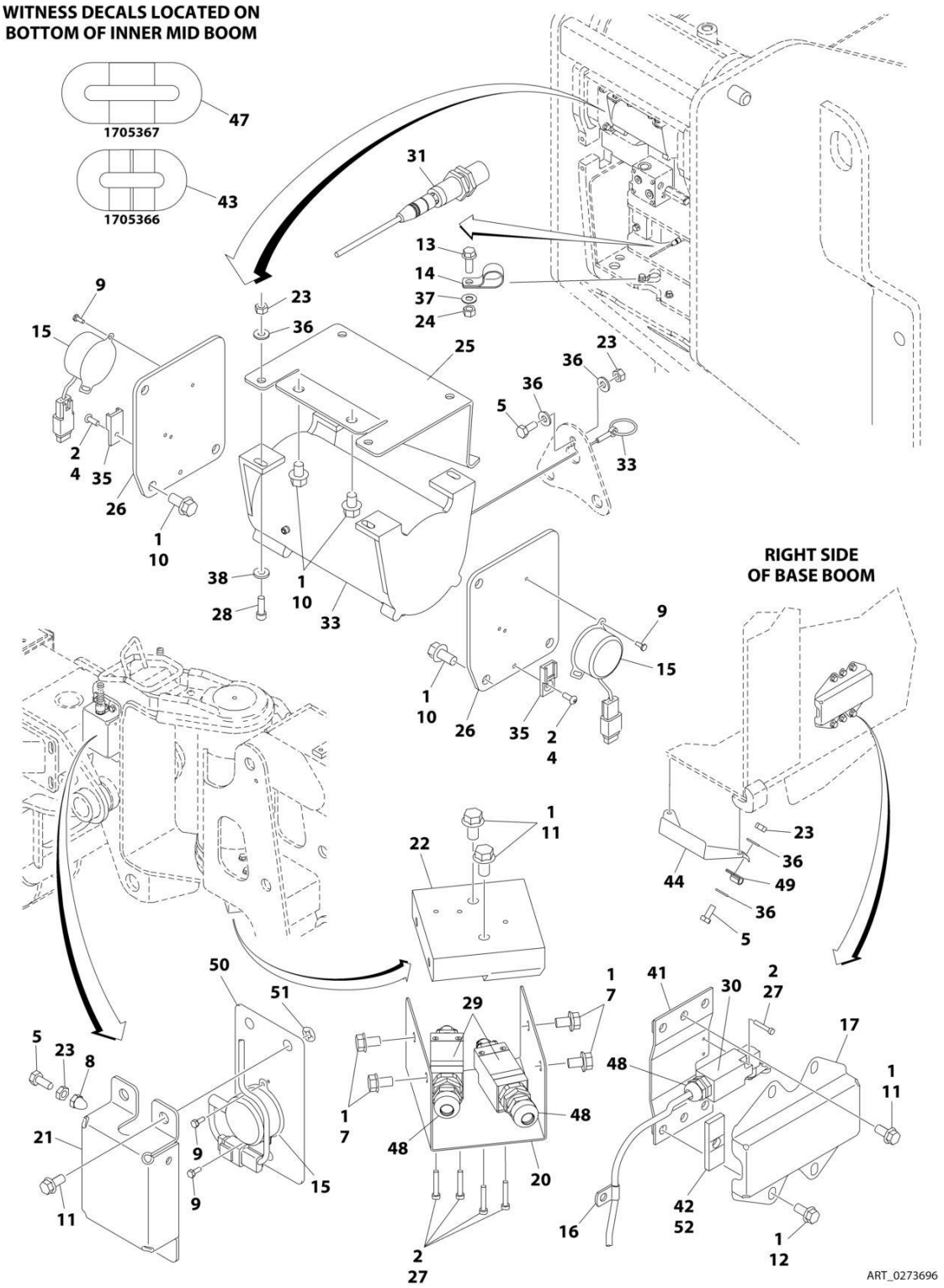

FIGURE 4-14. BOOM SENSORS AND SWITCHES INSTALLATION

ITEM	PART NUMBER	QTY	DESCRIPTION	REV
	0273696	Ref	BOOM SENSORS AND SWITCHES INSTALLATION	H
1	0100011	AR	Compound, Locking	
2	0100035	AR	Compound, Locking	
3	0100048	AR	Grease, Dielectric	
4	0630464	2	Screw #10 x 1/2	
5	0641405	5	Bolt 1/4 x 5/8	
7	0791504	4	Screw 5/16 x 1/2	
8	3300430	2	Nut 1/4	
9	3930606	12	Screw, Machine #6 x 3/8	
10	0791604	8	Screw 3/8 x 1/2	
11	0791605	12	Screw 3/8 x 5/8	
12	0791606	4	Screw 3/8 x 3/4	
13	0791608	4	Screw 3/8 x 1	
14	1320130	2	Clamp, Hose	
15	1001147479	4	Sensor, Angle Indicator (Note: Control System must be recalibrated when Sensor is replaced)	
15	4460910	2	Connector, Female Deutsch - 3 Position	
15	4460917	6	Pin, Male	
15	4460913	1	Lock, Wedge	
16	1320301	1	Clamp, Cable	
17	1671031	1	Cover, Limit Switch	
20	1671039	1	Cover, Jib Switch	
21	1671044	2	Cover, Level Sensor	
22	3200433	1	Mount, Jib Switch	
23	3311405	9	Nut 1/4	
24	3311605	2	Nut 3/8	
25	3574431	1	Plate, Switch Mounting	
26	3573301	2	Plate, Sensor Mounting	
27	3930816	6	Capscrew #8 x 1	
28	3931414	4	Capscrew 1/4 x 7/8	
29	4360548	2	Switch, Jib Limit (Note: Control System must be recalibrated when Switch is replaced)	
30	4360578	1	Switch, Limit (Note: Control System must be recalibrated when Switch is replaced)	
31	4360527	1	Switch, Cable Break Proximity (Note: Control System must be recalibrated when Switch is replaced)	
33	4360543	1	Sensor, Boom Length (Note: Control System must be recalibrated when Sensor is replaced)	
35	4460914	2	Terminal, Base	
36	4711400	10	Washer 1/4	
37	4711600	2	Washer 3/8	
38	4891400	4	Washer 1/4	
41	4846484	1	Mount, Switch	
42	3340941	1	Pad, Rubber	
43	1705366	1	Decal - Boom Length (500LB Cap)	
44	3574616	1	Plate, Boom Length	
47	1705367	1	Decal - Boom Length (1000LB Cap)	
48	4460968	3	Connector, Strain Relief (Not Shown)	
49	1320136	2	Clamp, Cable (Not Shown)	
50	4341158	2	Plate, Mounting Sensor	
51	8310070	6	Pushnut 3/8	

ITEM	PART NUMBER	QTY	DESCRIPTION	REV
52	0100081	AR	Adhesive	

FIGURE 4-15. PLATFORM SUPPORT INSTALLATION

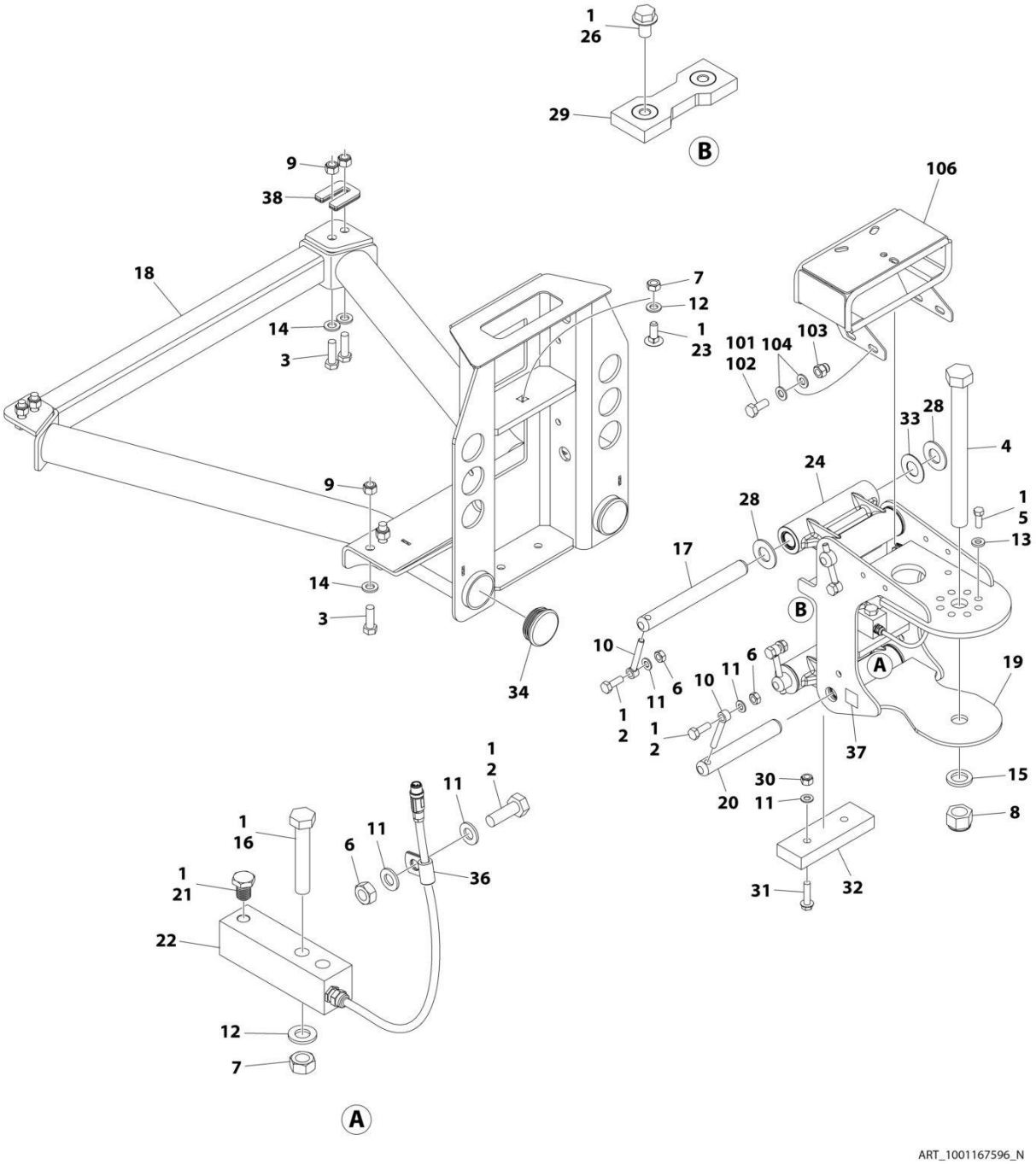

FIGURE 4-15. PLATFORM SUPPORT INSTALLATION

ITEM	PART NUMBER	QTY	DESCRIPTION	REV
	1001167596	Ref	PLATFORM SUPPORT INSTALLATION	N
1	0100011	AR	Compound, Locking	
2	0761014	5	Bolt M10 x 30	
3	0761216	8	Bolt M12 x 40	
4	1001255133	1	Bolt 1 x 11 GRD8	
5	0681608	8	Bolt 3/8 x 1 GRD8	
6	3291001	5	Nut M10	
7	3291201	3	Nut M12	
8	1001174040	1	Nut 1	
9	3291205	8	Nut M12	
10	3841143	4	Keeper, Pin	
11	4812000	8	Washer M10	
12	4812100	3	Washer M12	
13	4891600	8	Washer 3/8	
14	5241200	8	Washer M12	
15	4892600001	1	Washer 1	
16	1001098828	2	Bolt M12 x 70 CL10.9	
17	1001167565	2	Pin	
18	1001200494	1	Support, Platform	
19	1001167567	1	Support, Rotator	
20	1001168402	2	Pin	
21	1001188622	1	Screw	
22	1001247468	1	Loadcell	
23	1001188844	1	Bolt M12 x 35	
24	1001201351	2	Link	
24	1001187382	4	Bearing	
24	1001187383	4	Seal	
26	5251008	2	Bolt M10 x 16 CL10.9	
28	1001189002	8	Bearing	
29	1001190985	1	Pad, Wear	
30	3291005	2	Nut M10	
31	5251016	2	Bolt M10 x 40 CL10.9	
32	1001200491	1	Pad, Wear	
33	1001189001	4	Bearing	
34	1001204725	2	Plug	
36	91203039	1	Clamp	
37	1001216630	2	Decal - Tie Down/No Lift	
38	1001238421	Ref	Kit, Platform Leveling (Not Shown)	
	1001202687	Ref	VALVE MOUNT INSTALLATION	B
101	0100011	AR	Compound, Locking	
102	0760810	4	Bolt M8 x 20	
103	3290806	4	Nut M8	
104	4811900	8	Washer M8	
106	1001208994	1	Mount, Valve	

FIGURE 4-16. CONTROL VALVE INSTALLATION

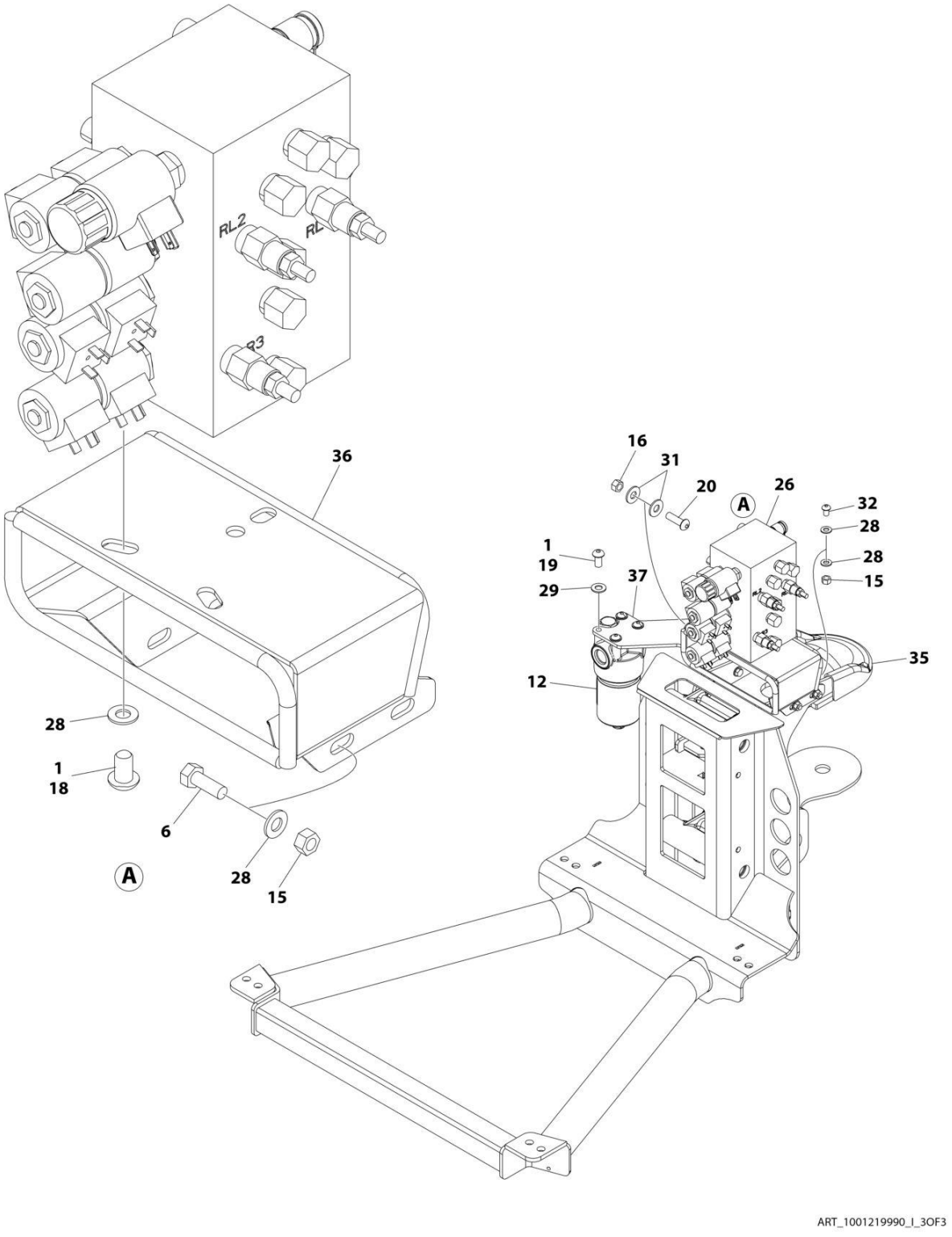

FIGURE 4-16. CONTROL VALVE INSTALLATION

ITEM	PART NUMBER	QTY	DESCRIPTION	REV
	1001219990	Ref	CONTROL VALVE INSTALLATION - WITH 1 CELL LSS	I
1	0100011	AR	Compound, Locking	
6	0641507	4	Bolt 5/16 x 7/8	
12	2120217	1	Filter, Pressure	
12	70002097	1	Element	
12	70004328	1	Plug, Indicator	
15	3311505	6	Nut 5/16	
16	3311605	2	Nut 3/8	
18	3900210	3	Screw 5/16 x 3/4	
19	3900283	4	Screw 3/8 x 3/4	
20	3900316	2	Screw 3/8 x 1	
26	4641460	1	Platform Valve (See Separate Breakdown in this Section)	
28	4711500	15	Washer 5/16	
29	4711600	4	Washer 3/8	
31	4751600	4	Washer 3/8	
32	88261024	2	Bolt 5/16 x 1	
35	1001207969	1	Cover, Support/Rotator	
36	1001208994	1	Plate, Valve Mounting	
37	1001222314	1	Bracket, Filter Mounting	

FIGURE 4-17. CONTROL VALVE ASSEMBLY

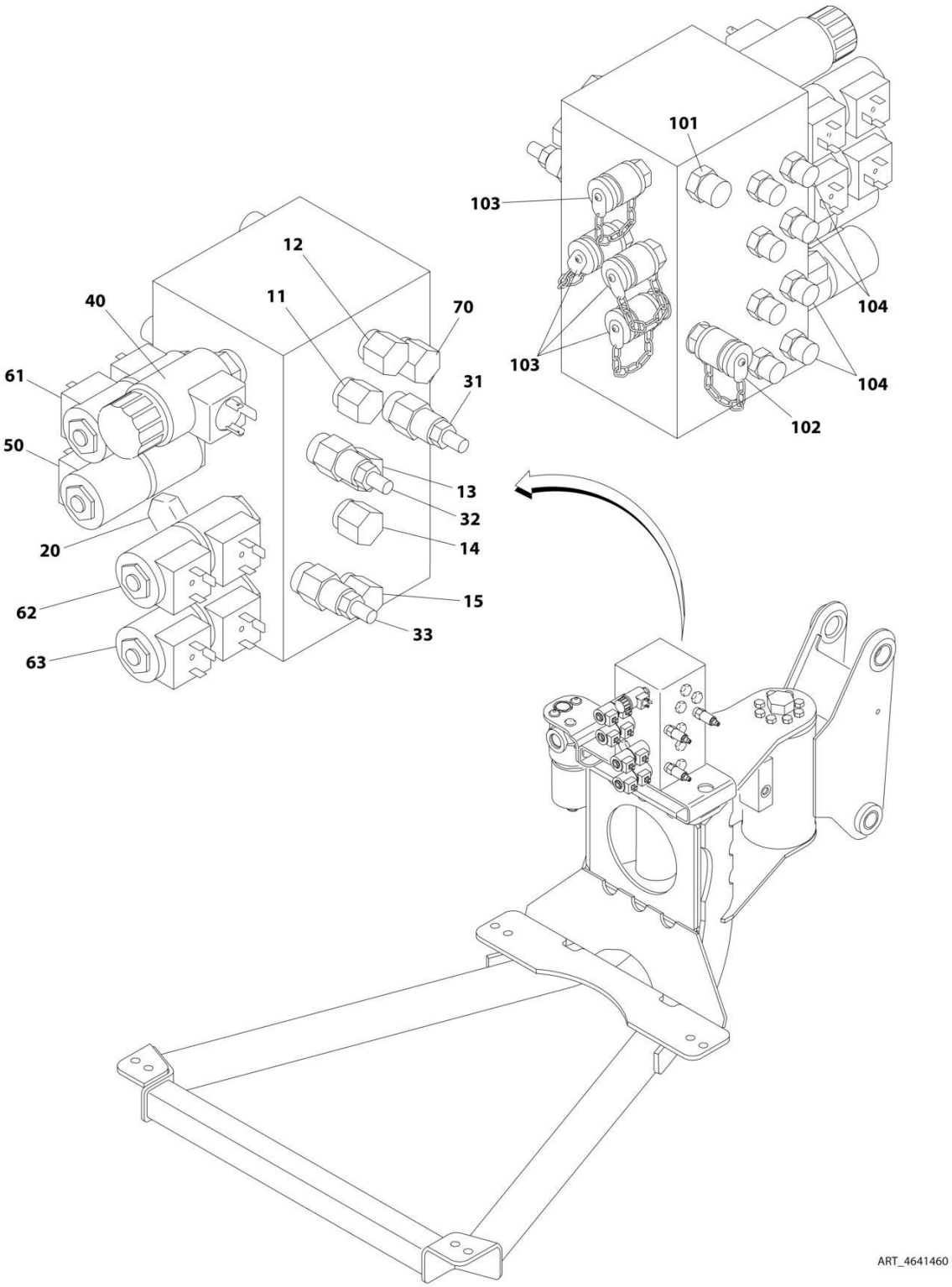

FIGURE 4-17. CONTROL VALVE ASSEMBLY

ITEM	PART NUMBER	QTY	DESCRIPTION	REV
	4641460	Ref	PLATFORM VALVE ASSEMBLY	C
11	7026018	1	Valve, Cartridge	
11	7011346	1	Seal Kit - Valve	
12	7026019	1	Valve, Cartridge (Flow Control)	
12	7011346	1	Seal Kit - Valve	
13	7026020	1	Valve, Cartridge (Rotate)	
13	7011346	1	Seal Kit - Valve	
14	7026021	1	Valve, Cartridge (Jib Swing)	
14	7011346	1	Seal Kit - Valve	
15	7026019	1	Valve, Cartridge (Jib Lift)	
15	7011346	1	Seal Kit - Valve	
20	7011355	1	Valve, Cartridge (Jib)	
20	2900770	1	Seal Kit - Valve	
31	7024572	1	Valve, Relief Cartridge (Platform Level Up)	
31	7011346	1	Seal Kit - Valve	
32	7024572	1	Valve, Relief Cartridge (Platform Level Down)	
32	7011346	1	Seal Kit - Valve	
33	7024572	1	Valve, Relief Cartridge (Jib Up/Down)	
33	7011346	1	Seal Kit - Valve	
40	7026022	1	Valve, Cartridge (Dump)	
40	2900770	1	Seal Kit - Valve	
40	7024571	1	Coil	
50	7023922	1	Valve, Cartridge (Platform Rotate)	
50	7017402	1	Seal Kit - Valve	
50	7012944	2	Coil	
61	7023922	1	Valve, Cartridge (Platform Level)	
61	7017402	1	Seal Kit - Valve	
61	7012944	2	Coil	
62	7023922	1	Valve, Cartridge (Jib Swing)	
62	7017402	1	Seal Kit - Valve	
62	7012944	2	Coil	
63	7023922	1	Valve, Cartridge (Jib Lift)	
63	7017402	1	Seal Kit - Valve	
63	7012944	2	Coil	
70	7026023	1	Valve, Cartridge (Check)	
70	7011346	1	Seal Kit - Valve	
	4641460	Ref	Platform Valve Assembly (Fitting Information)	C
101	2110606	1	Fitting, Straight	
102	4641255	1	Fitting (Check Valve)	
103	2221086	4	Check, Pressure	
104	2110404	8	Fitting, Straight	

SECTION 5 - PLATFORM

SECTION 5 - PLATFORM

FIGURE 5-1. PLATFORM ASSEMBLY - 36IN X 6FT (91.5CM X 1.83M) WITH SWING GATE

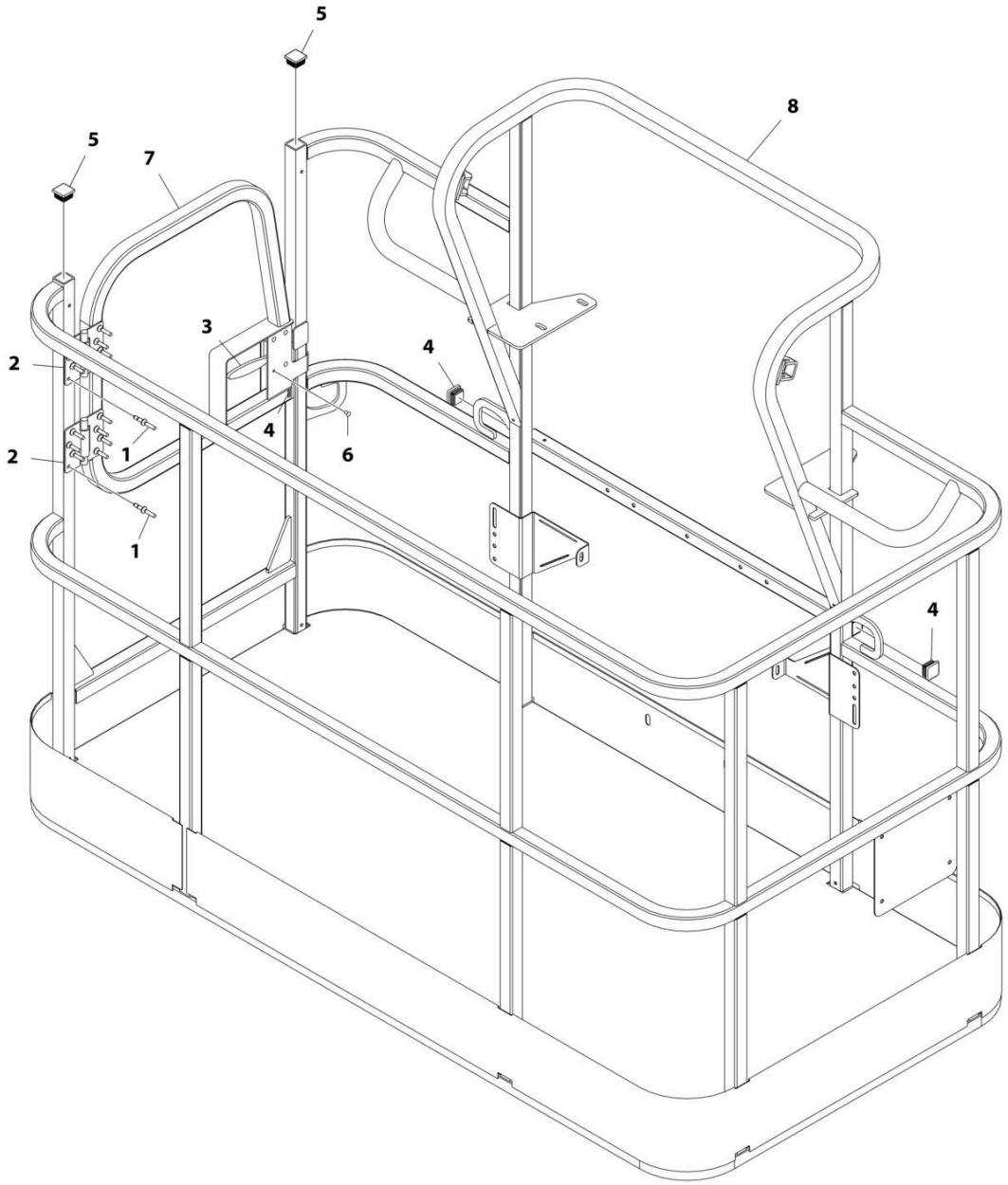

FIGURE 5-1. PLATFORM ASSEMBLY - 36IN X 6FT (91.5CM X 1.83M) WITH SWING GATE

ITEM	PART NUMBER	QTY	DESCRIPTION	REV
	1001186384	Ref	PLATFORM ASSEMBLY - 36IN X 6FT (91.5CM X 1.83M) WITH SWING GATE	C
	See Note	Ref	Note: Platform and Mesh must be ordered separately for Platforms with Mesh. See SPECIAL OPTIONS SECTION for Mesh Installations.	
	See Note	Ref	Note: Replacement Decals Must be Ordered Separately - See DECALS SECTION.	
1	2080040	16	Fastener, Huck	
2	2600281	2	Hinge	
3	2940074	1	Latch	
4	3520072	3	Plug	
5	3520198	2	Plug	
6	3820020	4	Rivet	
7	1001144629	1	Gate	
8	See Note	NSS	Platform (Note: Not Available - Purchase Platform Assembly)	

SECTION 5 - PLATFORM

FIGURE 5-2. PLATFORM ASSEMBLY - 36IN X 8FT (91.5CM X 2.44M) WITH SWING GATE

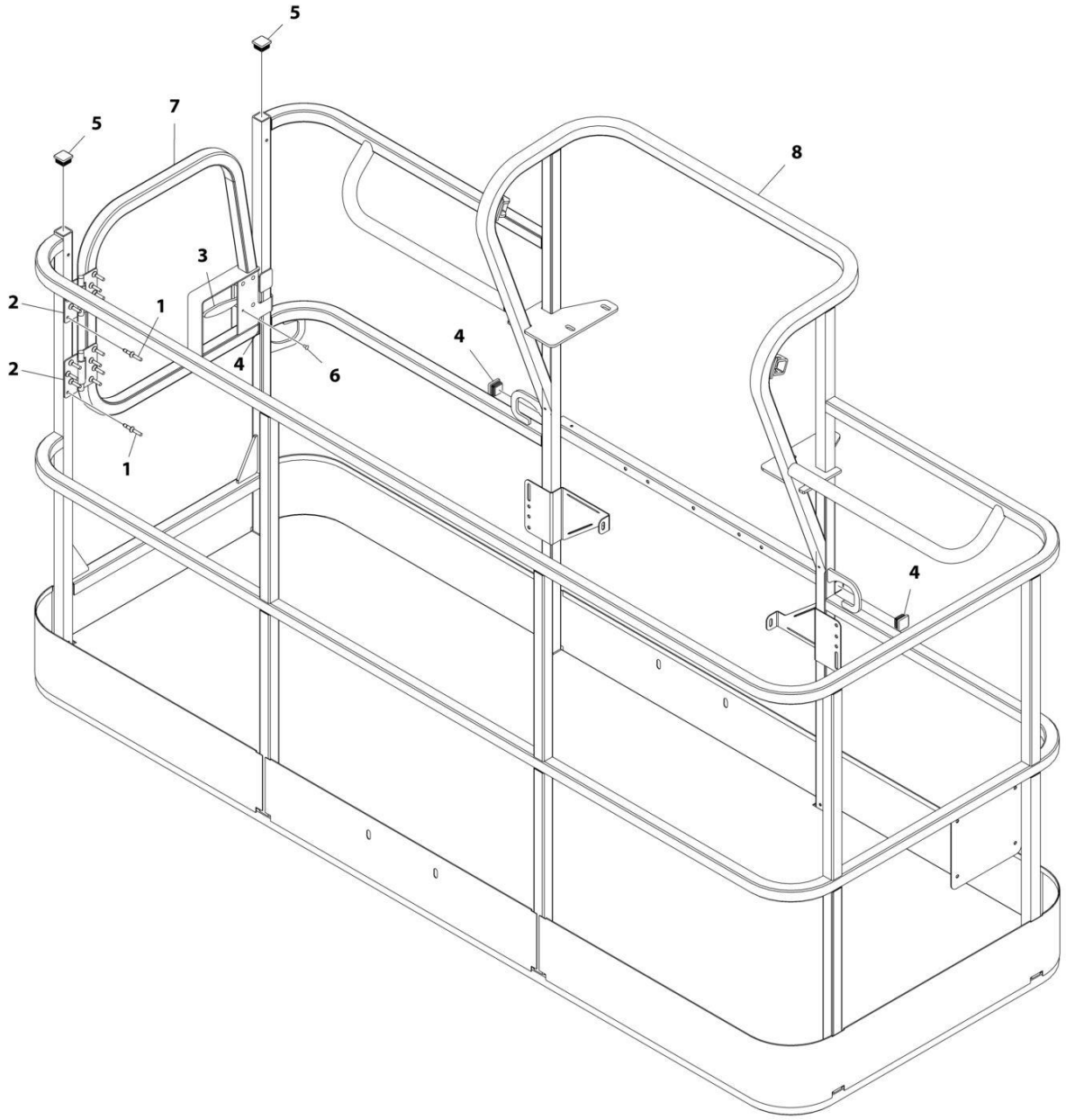

FIGURE 5-2. PLATFORM ASSEMBLY - 36IN X 8FT (91.5CM X 2.44M) WITH SWING GATE

ITEM	PART NUMBER	QTY	DESCRIPTION	REV
	1001186383	Ref	PLATFORM ASSEMBLY - 36IN X 8FT (91.5CM X 2.44M) WITH SWING GATE	D
		Ref	Note: Platform and Mesh must be ordered separately for Platforms with Mesh. See SPECIAL OPTIONS SECTION for Mesh Installations.	
		Ref	Note: Replacement Decals Must be Ordered Separately - See DECALS SECTION.	
1	2080040	16	Fastener, Huck	
2	2600281	2	Hinge	
3	2940074	1	Latch	
4	3520072	3	Plug	
5	3520198	2	Plug	
6	3820020	4	Rivet	
7	1001144629	1	Gate	
8	See Note	NSS	Platform (Note: Not Available - Purchase Platform Assembly)	

SECTION 5 - PLATFORM

FIGURE 5-3. PLATFORM ASSEMBLY - 30IN X 3FT (76CM X .91M) - WITH DROP BAR

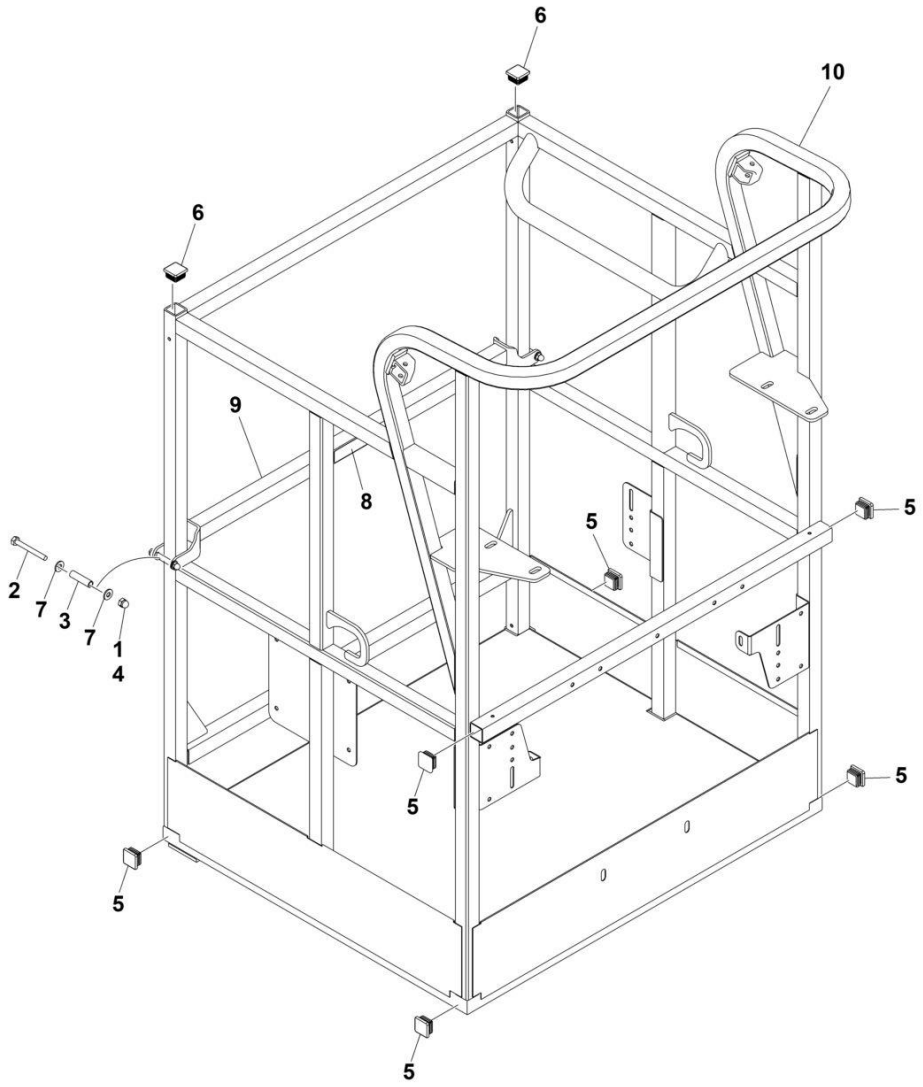

ART_1001228215

FIGURE 5-3. PLATFORM ASSEMBLY - 30IN X 3FT (76CM X .91M) - WITH DROP BAR

ITEM	PART NUMBER	QTY	DESCRIPTION	REV
	1001228215	Ref	PLATFORM ASSEMBLY	A
	See Note	Ref	Note: Platform and Mesh must be ordered separately for Platforms with Mesh. See SPECIAL OPTIONS SECTION for Mesh Installations.	
	See Note	Ref	Note: Replacement Decals Must be Ordered Separately - See DECAL SECTION.	
1	0100011	AR	Compound, Locking	
2	0641418	2	Bolt 1/4 x 2-1/4	
3	0961845	2	Bushing	
4	3300151	2	Nut 1/4	
5	3520072	6	Cap, Plug	
6	3520198	2	Cap, Plug	
7	4711400	4	Washer 1/4	
8	1001140429	1	Decal - Drop Bar	
9	1001226872	1	Bar, Drop	
10	See Note	NSS	Platform (Note: Not Available - Purchase Platform Assembly)	

SECTION 5 - PLATFORM

FIGURE 5-4. PLATFORM ASSEMBLY - 30IN X 4FT (76.2CM X 1.22M) WITH DROP BAR

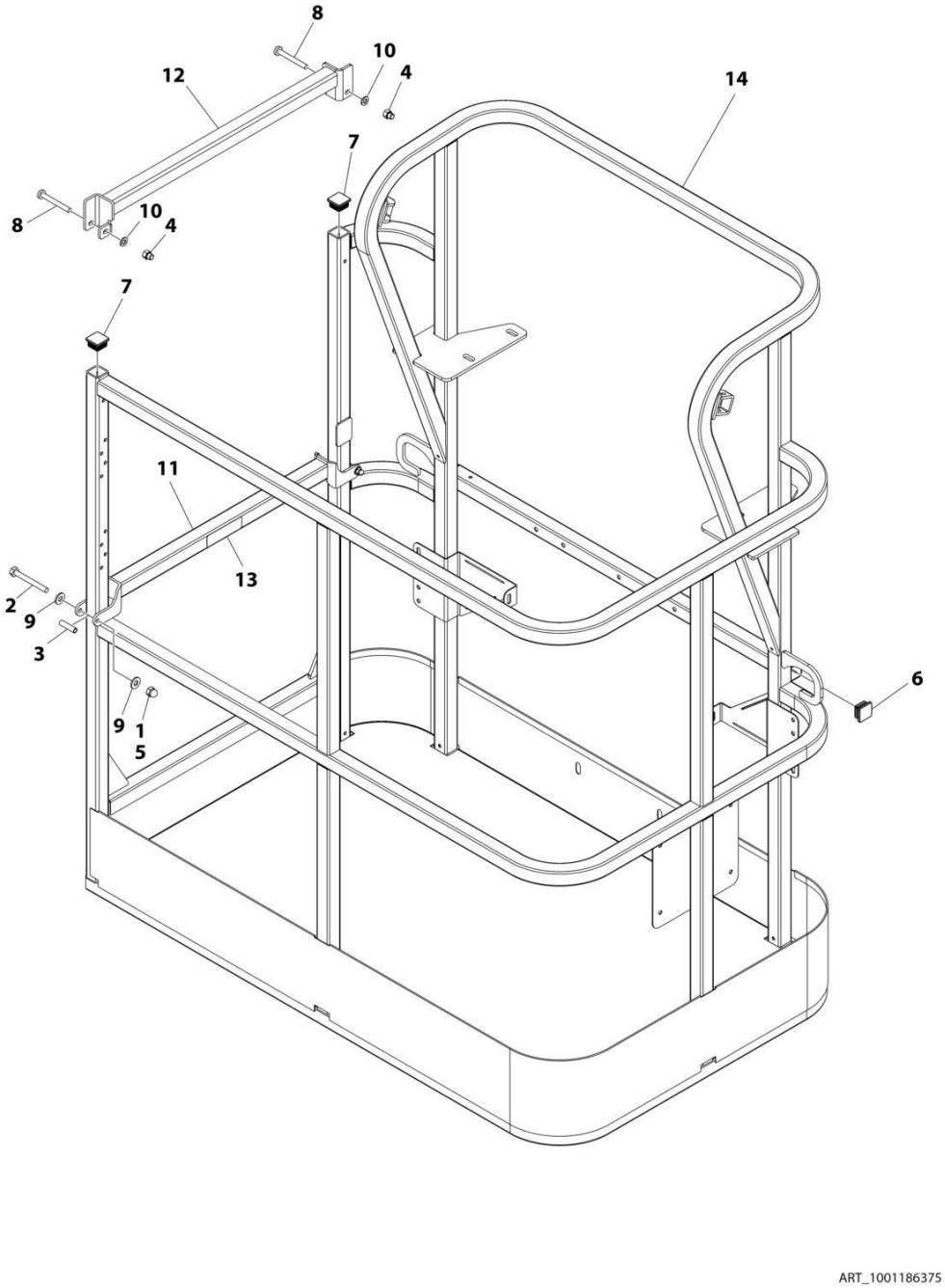

FIGURE 5-4. PLATFORM ASSEMBLY - 30IN X 4FT (76.2CM X 1.22M) WITH DROP BAR

ITEM	PART NUMBER	QTY	DESCRIPTION	REV
	1001186375	Ref	PLATFORM ASSEMBLY	B
		Ref	Note: Platform and Mesh must be ordered separately for Platforms with Mesh. See SPECIAL OPTIONS SECTION for Mesh Installations.	
		Ref	Note: Replacement Decals Must be Ordered Separately - See DECALS SECTION.	
1	0100011	AR	Compound, Locking	
2	0641418	2	Bolt 1/4 x 2-1/4	
3	0961845	2	Bushing	
4	3290606	2	Nut M6	
5	3300151	2	Nut 1/4	
6	3520072	2	Plug	
7	3520198	2	Plug	
8	4010618	2	Screw M6 x 50	
9	4711400	4	Washer 1/4	
10	4811700	2	Washer M6	
11	1001138494	1	Bar, Drop	
12	1001138514	1	Rail - Top	
13	1001140429	1	Decal - Drop Bar	
14	See Note	1	Platform (Note: Not Available - Purchase Platform Assembly)	

FIGURE 5-5. PLATFORM ASSEMBLY - 36IN X 6FT (91.5CM X 1.83M) WITH DROP BAR

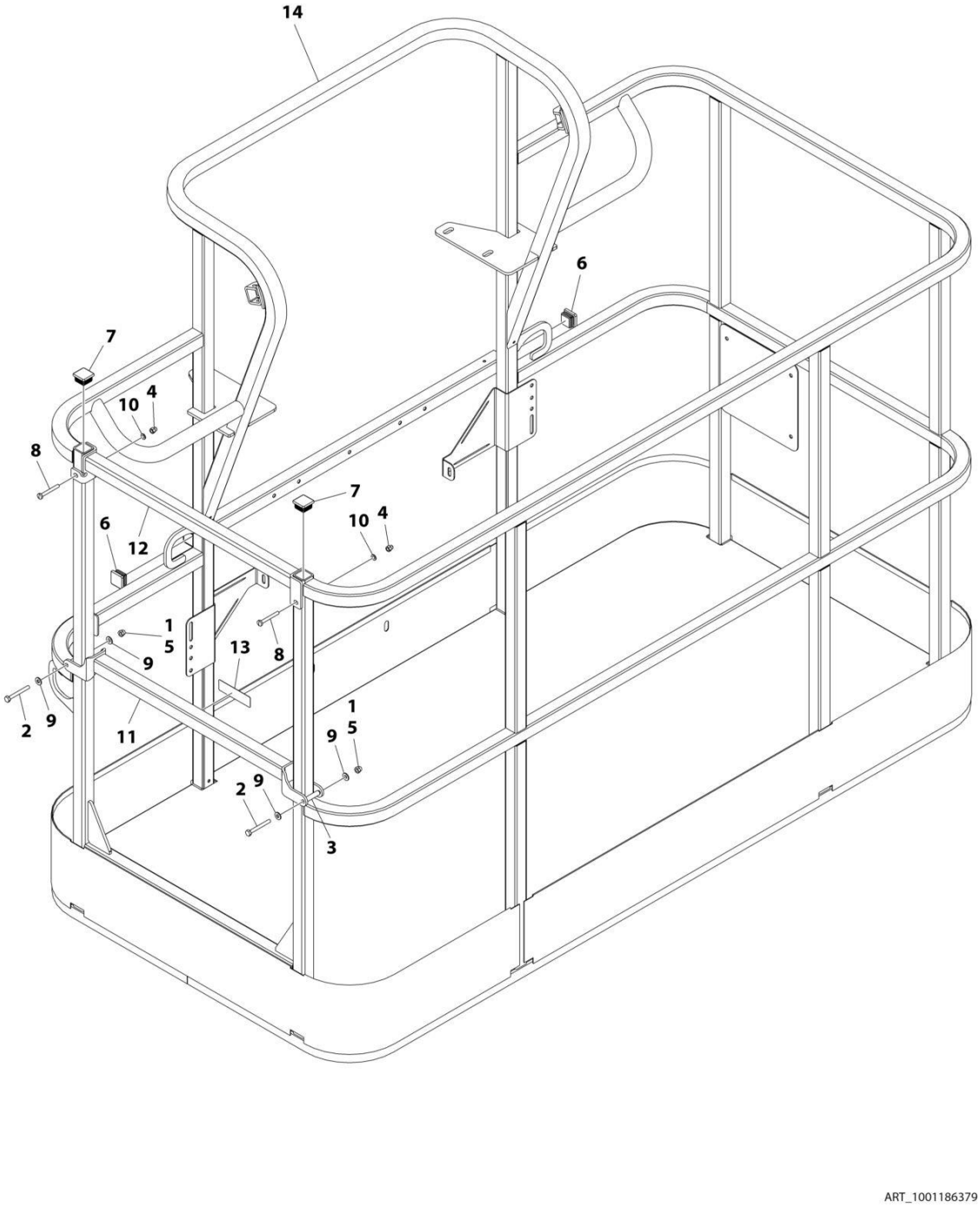

FIGURE 5-5. PLATFORM ASSEMBLY - 36IN X 6FT (91.5CM X 1.83M) WITH DROP BAR

ITEM	PART NUMBER	QTY	DESCRIPTION	REV
	1001186379	Ref	PLATFORM ASSEMBLY - 36IN X 6FT (91.5CM X 1.83M) WITH DROP BAR	B
		Ref	Note: Platform and Mesh must be ordered separately for Platforms with Mesh. See SPECIAL OPTIONS SECTION for Mesh Installations.	
		Ref	Note: Replacement Decals Must be Ordered Separately - See DECALS SECTION.	
1	0100011	AR	Compound, Locking	
2	0641418	2	Bolt 1/4 x 2-1/4	
3	0961845	2	Bushing	
4	3290606	2	Nut M6	
5	3300151	2	Nut 1/4	
6	3520072	2	Plug	
7	3520198	2	Plug	
8	4010618	2	Screw M6 x 50	
9	4711400	4	Washer 1/4	
10	4811700	2	Washer M6	
11	1001138494	1	Bar, Drop	
12	1001138514	1	Rail (Top)	
13	1001140429	1	Decal - Drop Bar	
14	See Note	NSS	Platform (Note: Not Available - Purchase Platform Assembly)	

FIGURE 5-6. PLATFORM ASSEMBLY - 36IN X 8FT (91.5CM X 2.44M) WITH DROP BAR

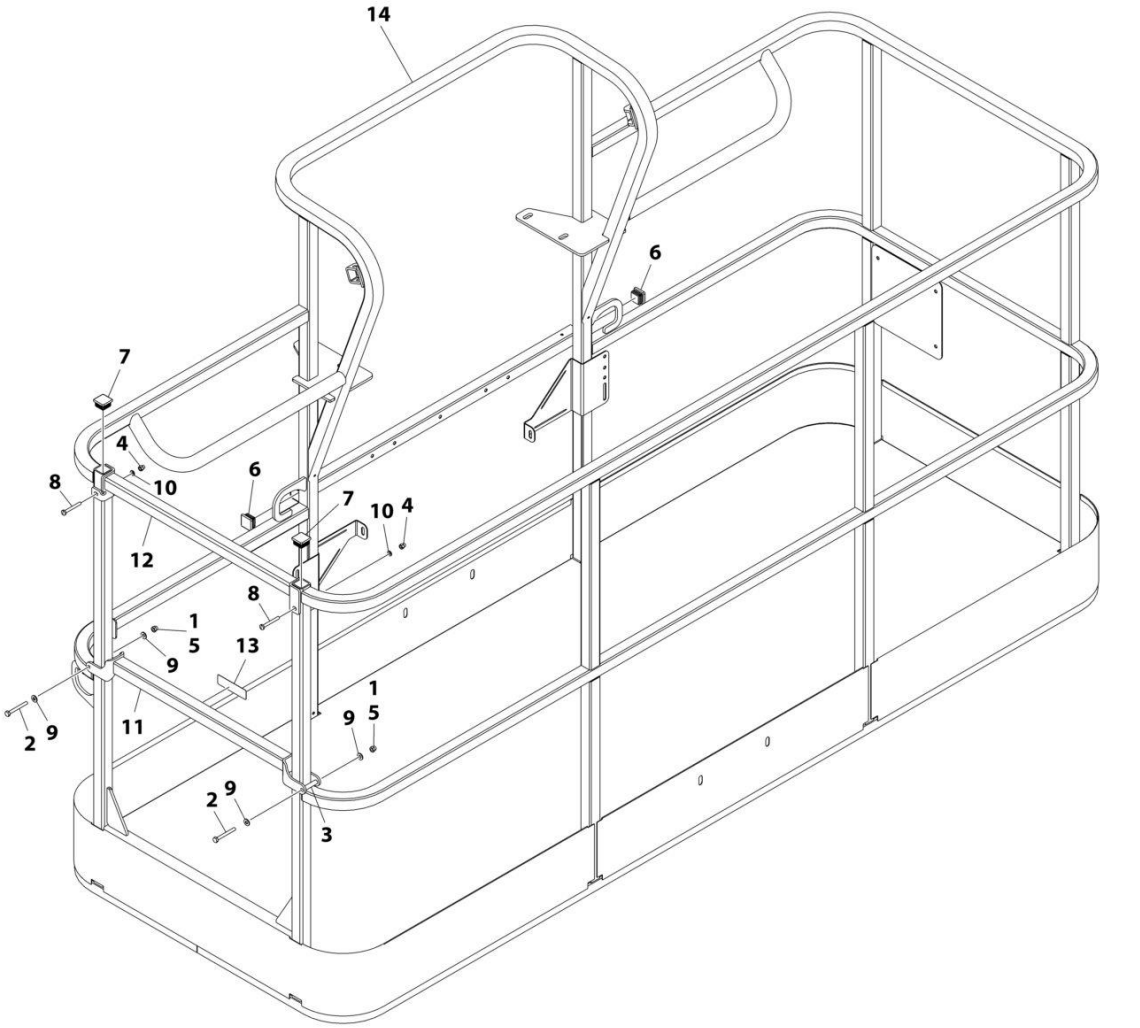

FIGURE 5-6. PLATFORM ASSEMBLY - 36IN X 8FT (91.5CM X 2.44M) WITH DROP BAR

ITEM	PART NUMBER	QTY	DESCRIPTION	REV
	1001186382	Ref	PLATFORM ASSEMBLY - 36IN X 8FT (91.5CM X 2.44M) WITH DROP BAR	C
		Ref	Note: Platform and Mesh must be ordered separately for Platforms with Mesh. See SPECIAL OPTIONS SECTION for Mesh Installations.	
		Ref	Note: Replacement Decals Must be Ordered Separately - See DECALS SECTION.	
1	0100011	AR	Compound, Locking	
2	0641418	2	Bolt 1/4 x 2-1/4	
3	0961845	2	Bushing	
4	3290606	2	Nut M6	
5	3300151	2	Nut 1/4	
6	3520072	2	Plug	
7	3520198	2	Plug	
8	4010618	2	Screw M6 x 50	
9	4711400	4	Washer 1/4	
10	4811700	2	Washer M6	
11	1001138494	1	Bar, Drop	
12	1001138514	1	Rail (Top)	
13	1001140429	1	Decal - Drop Bar	
14	See Note	NSS	Platform (Note: Not Available - Purchase Platform Assembly)	

SECTION 5 - PLATFORM

FIGURE 5-7. PLATFORM ASSEMBLY - 36IN X 6FT (91.5CM X 1.83M) WITH FALL ARREST (ANSI, ANSI EXPORT AND CHINA SPECS)

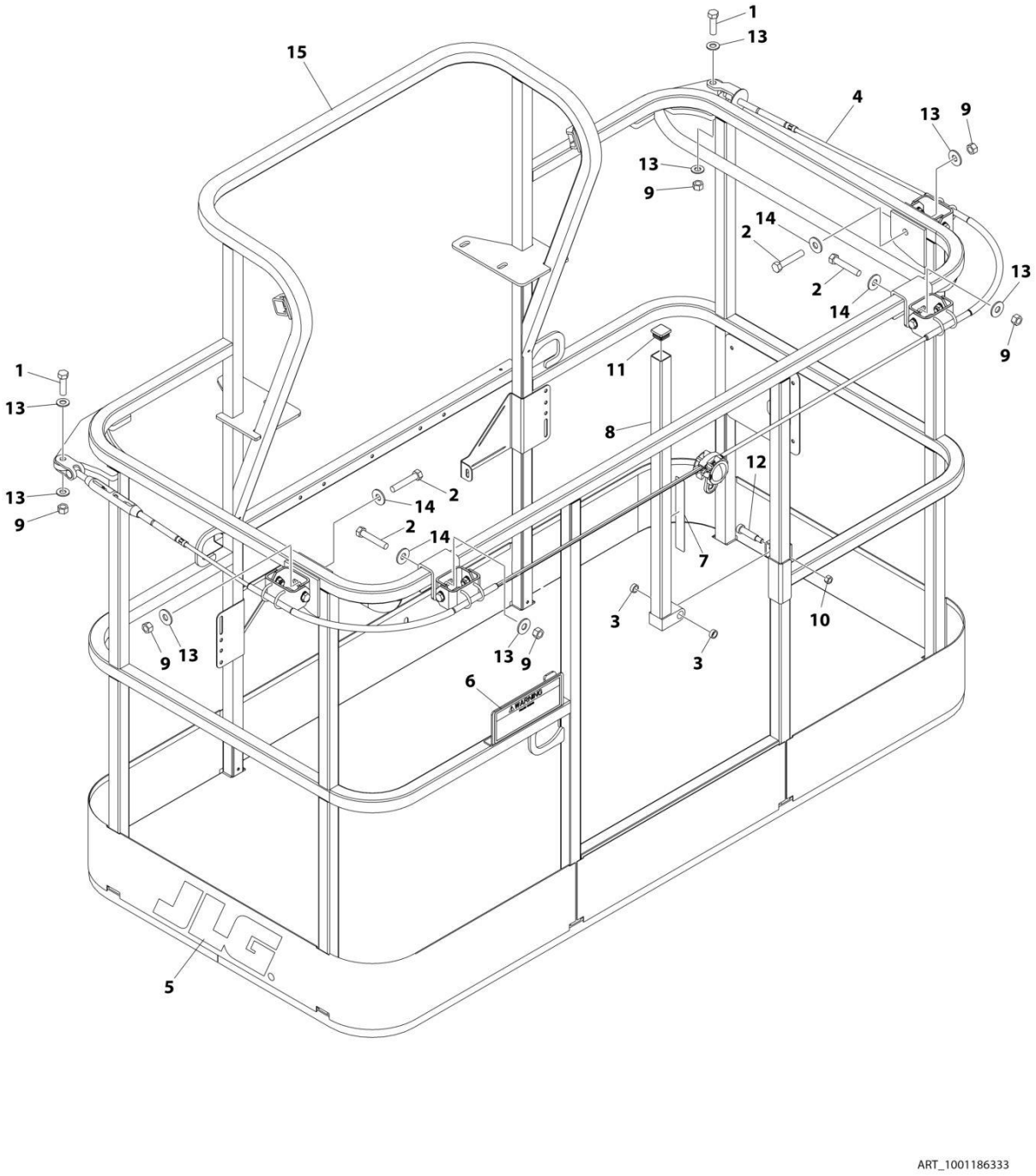

FIGURE 5-7. PLATFORM ASSEMBLY - 36IN X 6FT (91.5CM X 1.83M) WITH FALL ARREST (ANSI, ANSI EXPORT AND CHINA SPECS)

ITEM	PART NUMBER	QTY	DESCRIPTION	REV
	1001186333	Ref	PLATFORM ASSEMBLY	C
		Ref	Note: Replacement Decals Must be Ordered Separately - See DECALS SECTION.	
1	0681814	2	Bolt 1/2 x 1-3/4 Grade 8	
2	0681822	4	Bolt 1/2 x 2-3/4 Grade 8	
3	0962270	2	Bearing	
4	1001203655	1	Cable	
5	1702773	1	Decal - JLG	
6	1705014	1	Decal - Safety	
7	1706385	1	Decal - Drop Bar	
8	2410014	1	Bar, Drop	
9	3271805	6	Nut 1/2 Grade 8	
10	3311605	1	Nut 3/8	
11	3520072	1	Plug	
12	3900054	1	Bolt 1/2 x 1-3/4	
13	4711800	8	Washer 1/2	
14	4751800	4	Washer 1/2	
15	See Note	NSS	Platform (Note: Not Available - Purchase Platform Assembly)	

SECTION 5 - PLATFORM

FIGURE 5-8. PLATFORM ASSEMBLY - 36IN X 8FT (91.5CM X 2.44M) WITH FALL ARREST (ANSI SPEC)

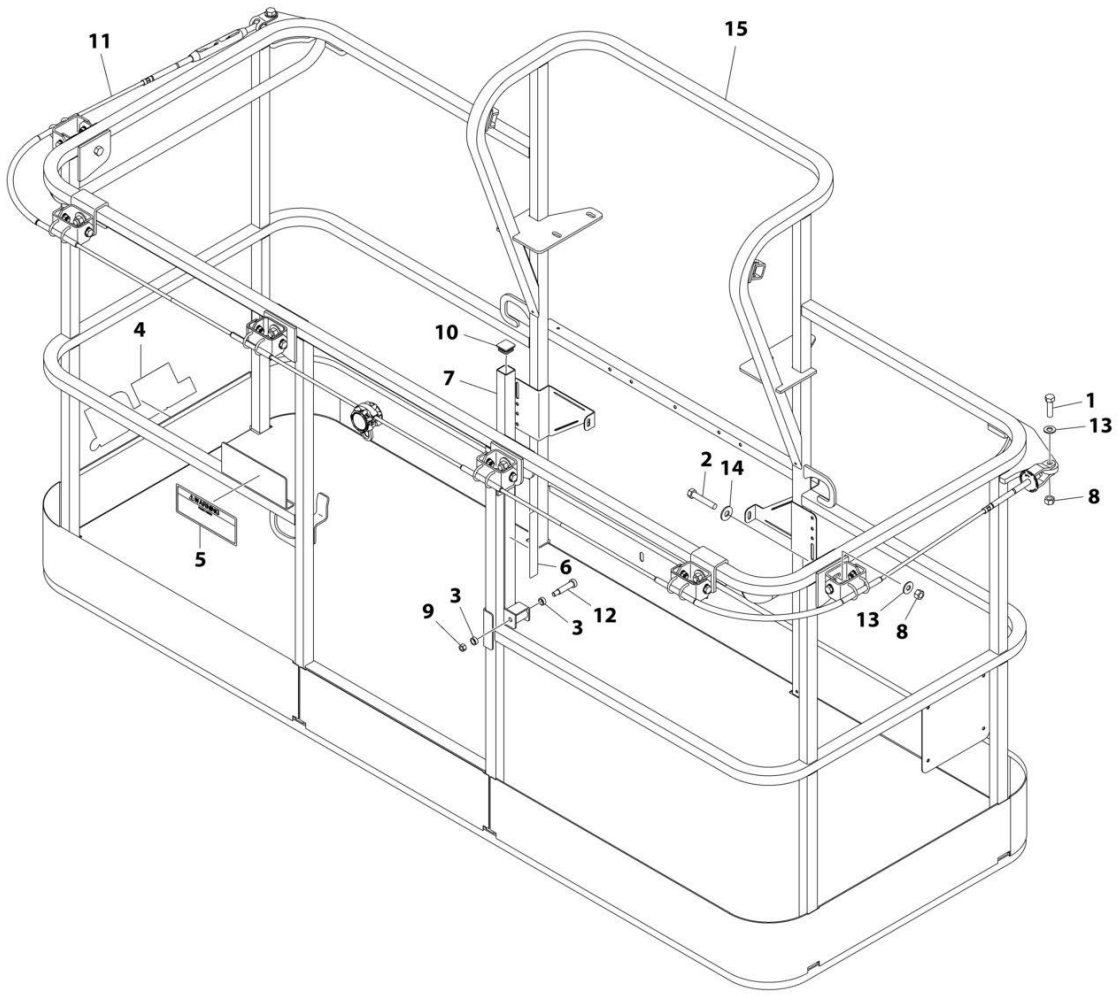

FIGURE 5-8. PLATFORM ASSEMBLY - 36IN X 8FT (91.5CM X 2.44M) WITH FALL ARREST (ANSI SPEC)

ITEM	PART NUMBER	QTY	DESCRIPTION	REV
	1001186334	Ref	PLATFORM ASSEMBLY	D
		Ref	Note: Replacement Decals Must be Ordered Separately - See DECALS SECTION.	
1	0681814	2	Bolt 1/2 x 1-3/4 Grade 8	
2	0681822	6	Bolt 1/2 x 2-3/4 Grade 8	
3	0962270	2	Bearing	
4	1702773	1	Decal - JLG	
5	1705014	1	Decal - Safety	
6	1706385	1	Decal - Drop Bar	
7	2410014	1	Bar, Drop	
8	3271805	8	Nut 1/2 Grade 8	
9	3311605	1	Nut 3/8	
10	3520072	1	Plug	
11	1001203656	1	Cable	
12	3900054	1	Bolt 1/2 x 1-3/4	
13	4711800	2	Washer 1/2	
14	4751800	6	Washer 1/2	
15	See Note	NSS	Platform (Note: Purchase Platform Assembly)	

FIGURE 5-9. PLATFORM ASSEMBLY - 36IN X 8FT (91.5CM X 2.44M) WITH FALL ARREST (AUSTRALIAN SPECS)

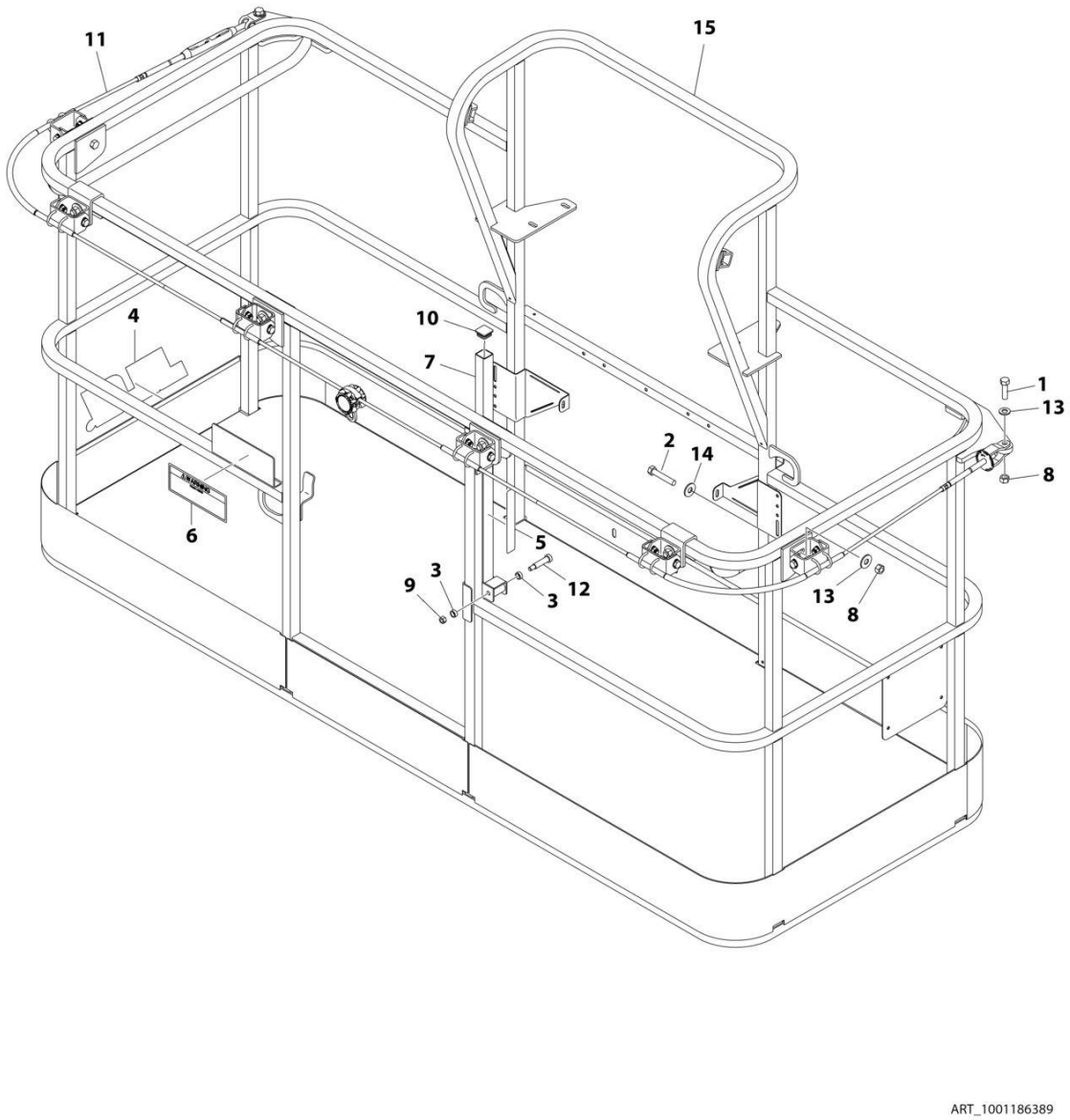

FIGURE 5-9. PLATFORM ASSEMBLY - 36IN X 8FT (91.5CM X 2.44M) WITH FALL ARREST (AUSTRALIAN SPECS)

ITEM	PART NUMBER	QTY	DESCRIPTION	REV
	1001186389	Ref	PLATFORM ASSEMBLY - 36IN X 8FT (91.5CM X 2.44M) WITH FALL ARREST	D
		Ref	Note: Standard decals must be ordered separately - See DECAL SECTION.	
1	0681814	2	Bolt 1/2 x 1-3/4 Grade 8	
2	0681822	6	Bolt 1/2 x 2-3/4 Grade 8	
3	0962270	2	Bearing	
4	1702773	1	Decal - JLG	
5	1706493	1	Decal - Drop Bar	
6	1706501	1	Decal - Safety	
7	2410014	1	Gate	
8	3271805	8	Nut 1/2 Grade 8	
9	3311605	1	Nut 3/8	
10	3520072	1	Plug	
11	1001203656	1	Cable	
12	3900054	1	Bolt 1/2 x 1-3/4	
13	4711800	8	Washer 1/2	
14	4751800	6	Washer 1/2	
15	1001186318	NSS	Platform (Note: Not Available - Purchase Platform Assembly)	

SECTION 5 - PLATFORM

FIGURE 5-10. PLATFORM ASSEMBLY - 36IN X 6FT (91.5CM X 1.83M) TRI-ENTRY WITH SWING GATE

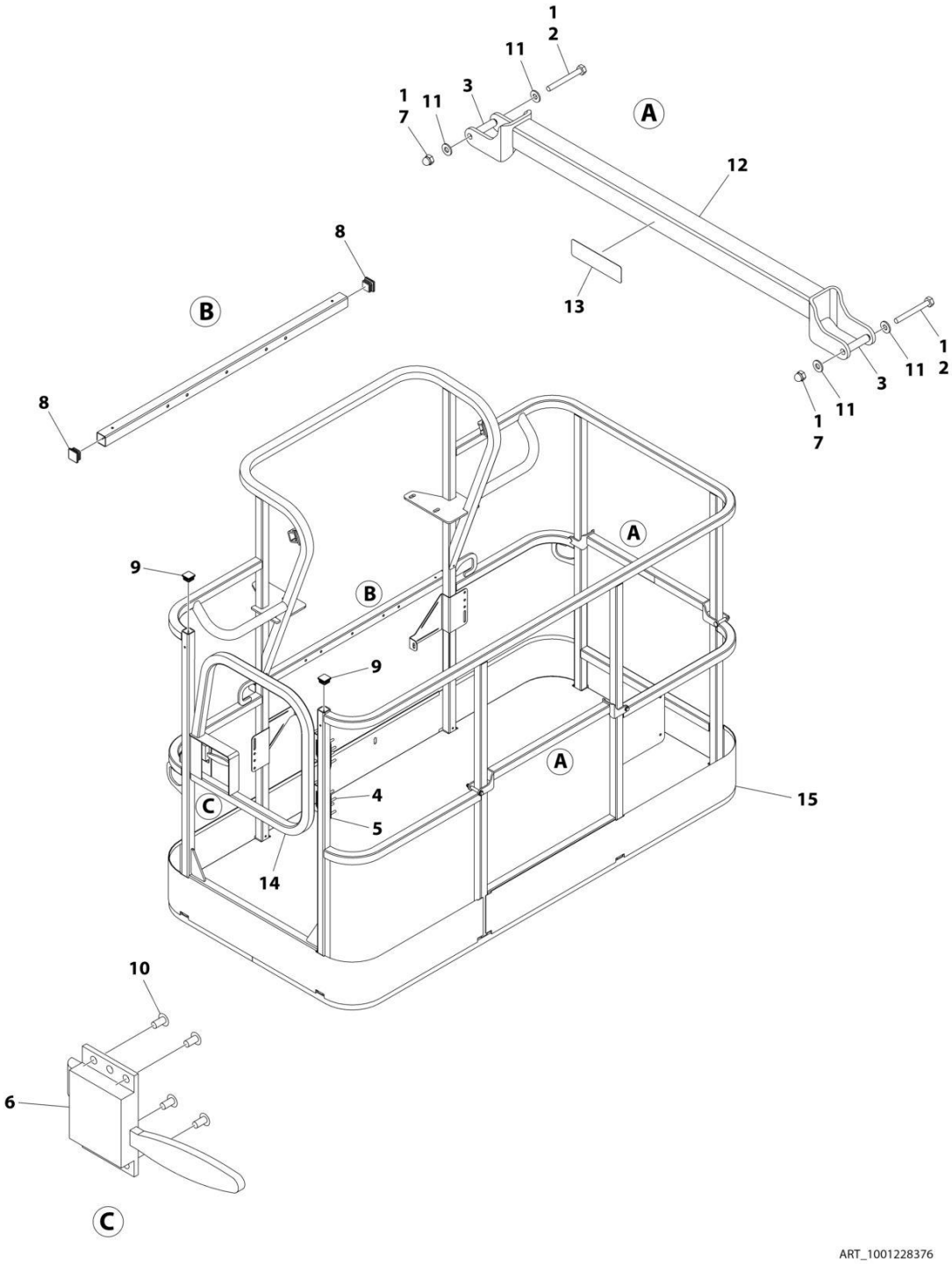

FIGURE 5-10. PLATFORM ASSEMBLY - 36IN X 6FT (91.5CM X 1.83M) TRI-ENTRY WITH SWING GATE

ITEM	PART NUMBER	QTY	DESCRIPTION	REV
	1001228376	Ref	PLATFORM ASSEMBLY - 36IN x 6FT (91.5CM x 1.83M)	B
		Ref	Note: Platform and Mesh must be ordered separately for Platforms with Mesh. See SPECIAL OPTIONS SECTION for Mesh Installations.	
		Ref	Note: Replacement Decals Must be Ordered Separately - See DECAL SECTION.	
1	0100011	AR	Compound, Locking	
2	0641418	4	Bolt 1/4 x 2-1/4	
3	0961845	4	Bushing	
4	2080040	16	Fastener	
5	2600281	2	Hinge	
6	2940074	1	Latch	
7	3300151	4	Nut 1/4	
8	3520072	3	Plug	
9	3520198	2	Plug	
10	3820020	4	Rivet	
11	4711400	8	Washer 1/4	
12	1001138494	2	Bar, Drop	
13	1001140429	2	Decal - Drop Bar	
14	1001144629	1	Gate	
15	See Note	NSS	Platform (Note: Not Available - Purchase Platform Assembly)	

SECTION 5 - PLATFORM

FIGURE 5-11. PLATFORM ASSEMBLY - 36IN X 6FT (91.5CM X 1.83M) TRI-ENTRY WITH DROPBAR

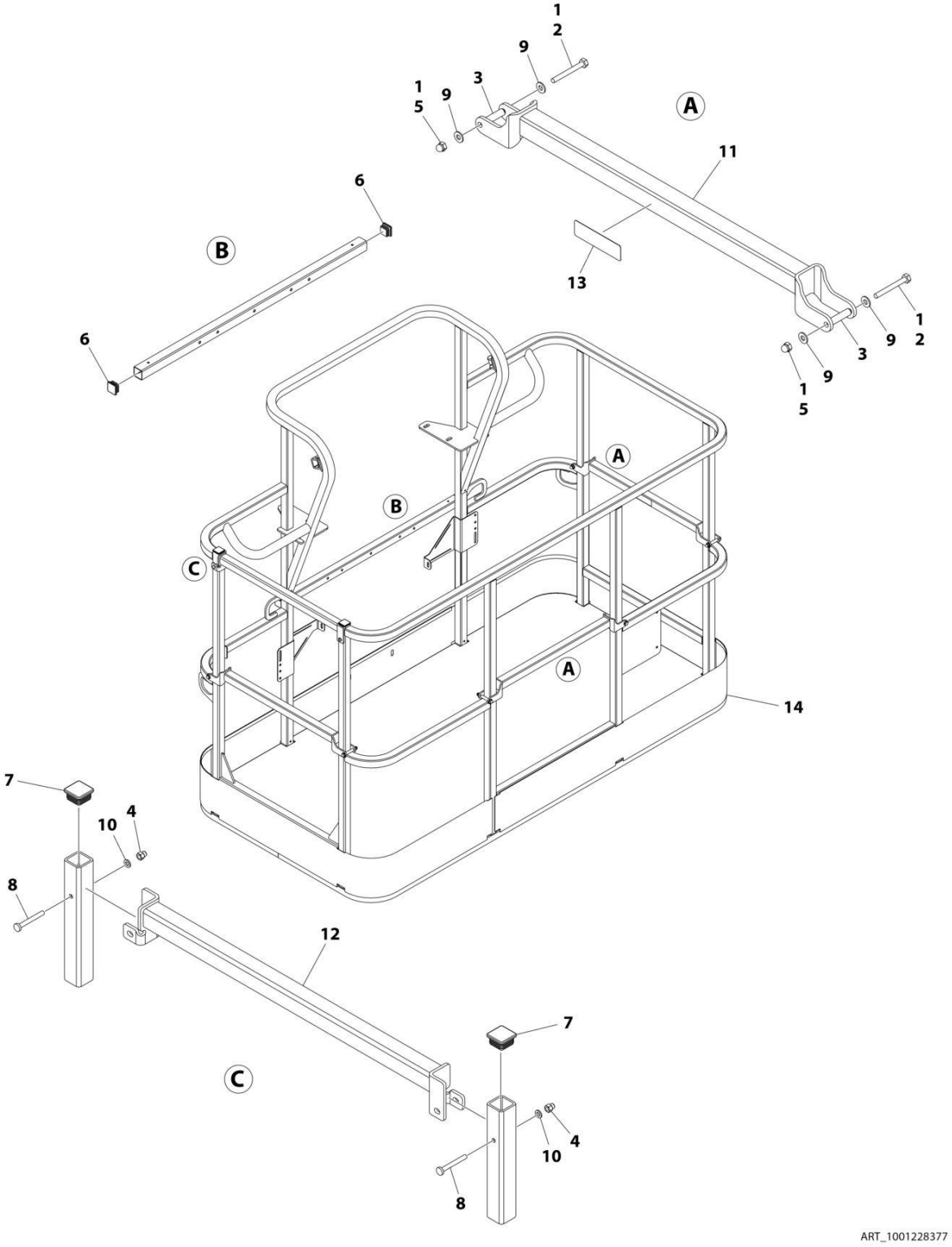

FIGURE 5-11. PLATFORM ASSEMBLY - 36IN X 6FT (91.5CM X 1.83M) TRI-ENTRY WITH DROPBAR

ITEM	PART NUMBER	QTY	DESCRIPTION	REV
	1001228377	Ref	PLATFORM ASSEMBLY - 36IN x 6FT (91.5CM x 1.83M)	B
		Ref	Note: Platform and Mesh must be ordered separately for Platforms with Mesh. See SPECIAL OPTIONS SECTION for Mesh Installations.	
		Ref	Note: Replacement Decals Must be Ordered Separately - See DECAL SECTION.	
1	0100011	1	Compound, Locking	
2	0641418	6	Bolt 1/4 x 2-1/4	
3	0961845	6	Bushing	
4	3290606	2	Nut M6	
5	3300151	6	Nut 1/4	
6	3520072	2	Plug	
7	3520198	2	Plug	
8	4010618	2	Screw M6 x 50	
9	4711400	12	Washer 1/4	
10	4811700	2	Washer M6	
11	1001138494	3	Bar, Drop	
12	1001138514	1	Rail (Top)	
13	1001140429	3	Decal - Drop Bar	
14	See Note	NSS	Platform, Weldment (Note: Not Available - Purchase Platform Assembly)	

FIGURE 5-12. PLATFORM ASSEMBLY - 36IN X 8FT (91.5CM X 2.44M) WITH TRI-ENTRY (1 GATE/2 DROP BARS)

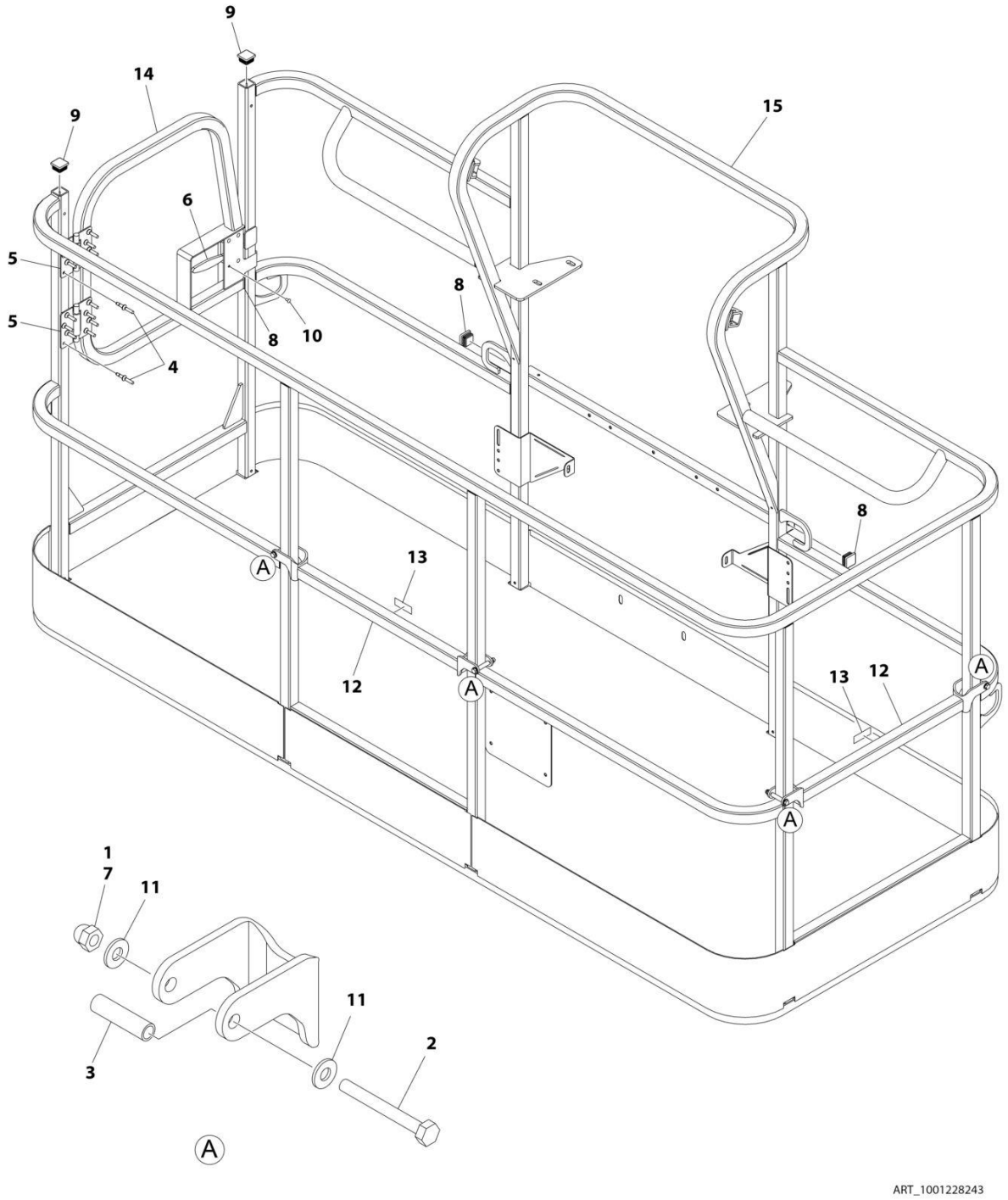

FIGURE 5-12. PLATFORM ASSEMBLY - 36IN X 8FT (91.5CM X 2.44M) WITH TRI-ENTRY (1 GATE/2 DROP BARS)

ITEM	PART NUMBER	QTY	DESCRIPTION	REV
	1001228243	Ref	PLATFORM ASSEMBLY - 36IN X 8FT (91.5CM X 2.44M) WITH TRI-ENTRY	A
		Ref	Note: Platform and Mesh must be ordered separately for Platforms with Mesh. See SPECIAL OPTIONS SECTION for Mesh Installations.	
1	0100011	AR	Compound, Locking	
2	0641418	4	Bolt 1/4 x 2-1/4	
3	0961845	4	Bushing	
4	2080040	16	Fastener, Huck	
5	2600281	2	Hinge, Self-Closing	
6	2940074	1	Latch	
7	3300151	4	Nut 1/4	
8	3520072	3	Cap, Plug	
9	3520198	2	Cap, Plug	
10	3820020	4	Rivet	
11	4711400	8	Washer 1/4	
12	1001138494	2	Bar, Drop	
13	1001140429	2	Decal - Drop Bar	
14	1001144629	1	Gate, Weldment	
15	See Note	1	Platform (Note: Not Available - Purchase Platform Assembly)	

FIGURE 5-13. PLATFORM ASSEMBLY - 36IN X 8FT (91.5CM X 2.44M) WITH TRI-ENTRY (3 DROP BARS)

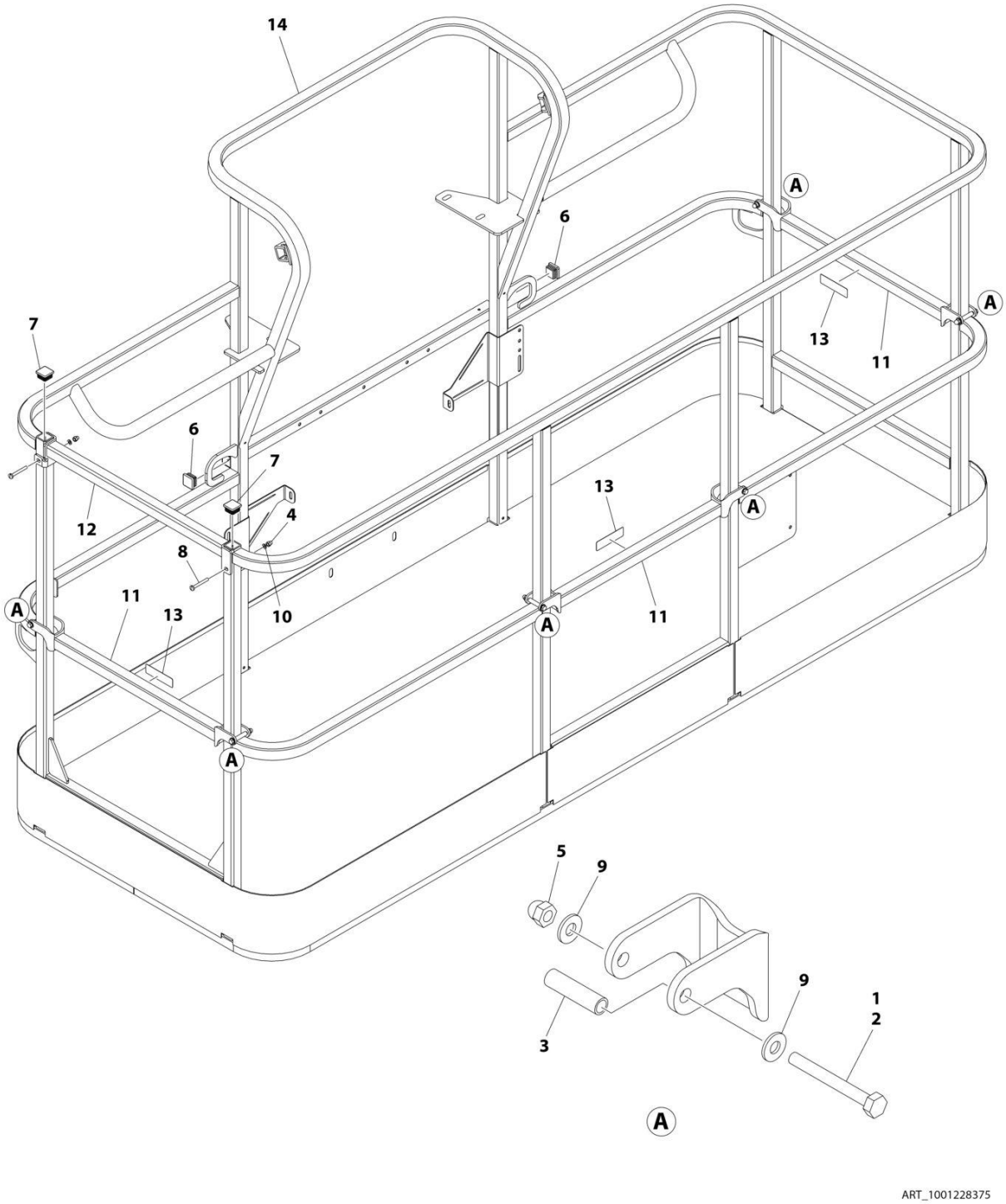

FIGURE 5-13. PLATFORM ASSEMBLY - 36IN X 8FT (91.5CM X 2.44M) WITH TRI-ENTRY (3 DROP BARS)

ITEM	PART NUMBER	QTY	DESCRIPTION	REV
	1001228375	Ref	PLATFORM ASSEMBLY - 36IN X 8FT (91.5CM X 2.44M) WITH TRI-ENTRY	A
		Ref	Note: Platform and Mesh must be ordered separately for Platforms with Mesh. See SPECIAL OPTIONS SECTION for Mesh Installations.	
		Ref	Note: Replacement Decals Must be Ordered Separately - See DECAL SECTION.	
1	0100011	AR	Compound, Locking	
2	0641418	6	Bolt 1/4 x 2-1/4	
3	0961845	6	Bushing	
4	3290606	2	Nut M6 x 1	
5	3300151	6	Nut 1/4	
6	3520072	2	Cap, Plug	
7	3520198	2	Cap, Plug	
8	4010618	2	Screw M6 x 50	
9	4711400	12	Washer 1/4	
10	4811700	2	Washer M6	
11	1001138494	3	Bar, Drop	
12	1001138514	1	Rail (Top)	
13	1001140429	3	Decal - Drop Bar	
14	See Note	1	Platform (Note: Not Available - Purchase Platform Assembly)	

FIGURE 5-14. PLATFORM CONTROLS INSTALLATION

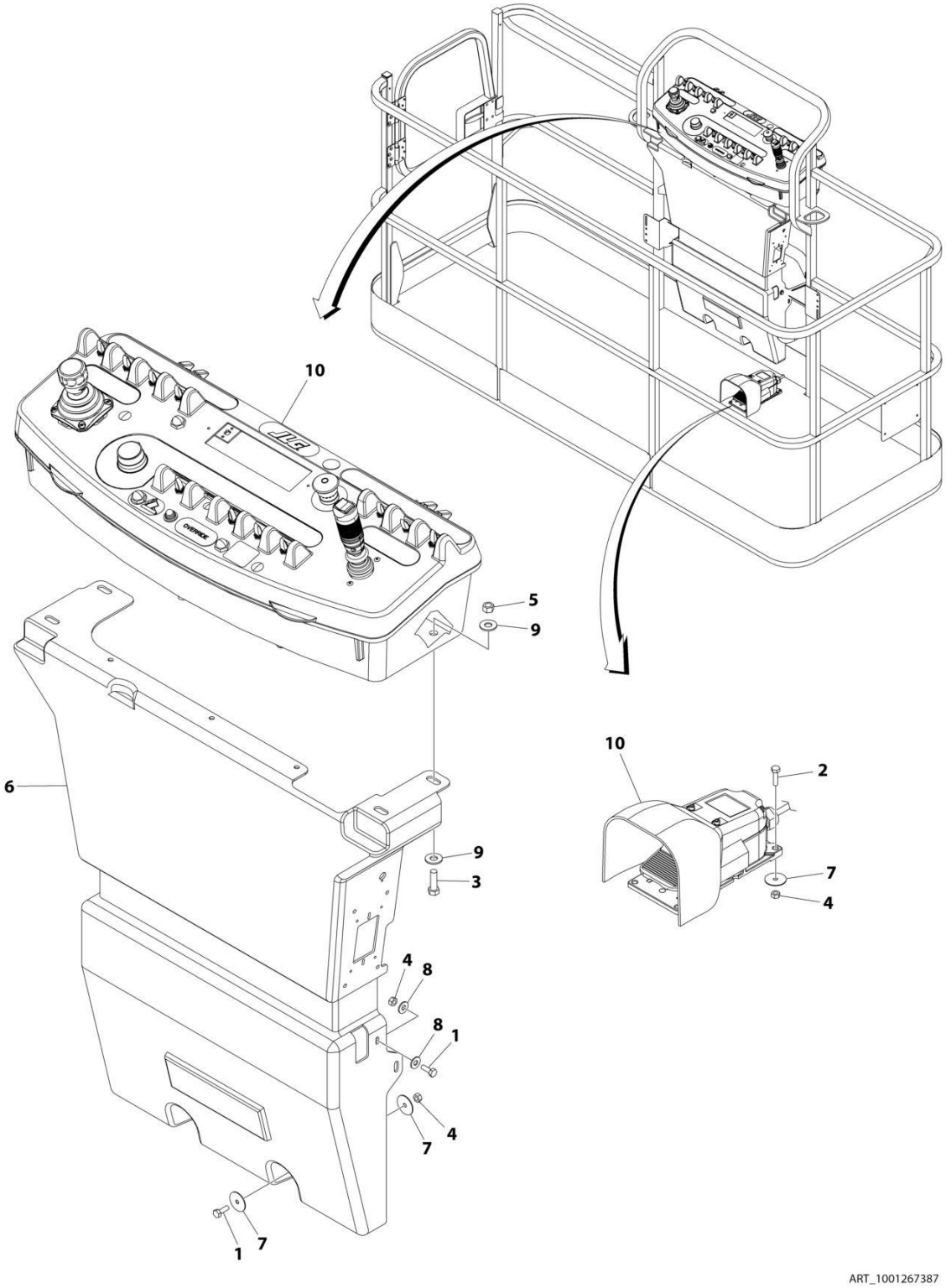

FIGURE 5-14. PLATFORM CONTROLS INSTALLATION

ITEM	PART NUMBER	QTY	DESCRIPTION	REV
	1001267387	Ref	PLATFORM CONTROLS INSTALLATION	A
1	0641406	4	Bolt 1/4 x 3/4	
2	0641408	3	Bolt 1/4 x 1	
3	0641610	4	Bolt 3/8 x 1-1/4	
4	3311405	7	Nut 1/4	
5	3311605	4	Nut 3/8	
6	3380434	1	Panel, Molded	
7	4740362	7	Washer, Fender	
8	4751400	4	Washer 1/4	
9	4751600	8	Washer 3/8	
10	1001267389	1	Platform Console Box Assembly (See Separate Breakdown in this Section)	

FIGURE 5-15. PLATFORM CONSOLE ASSEMBLEY

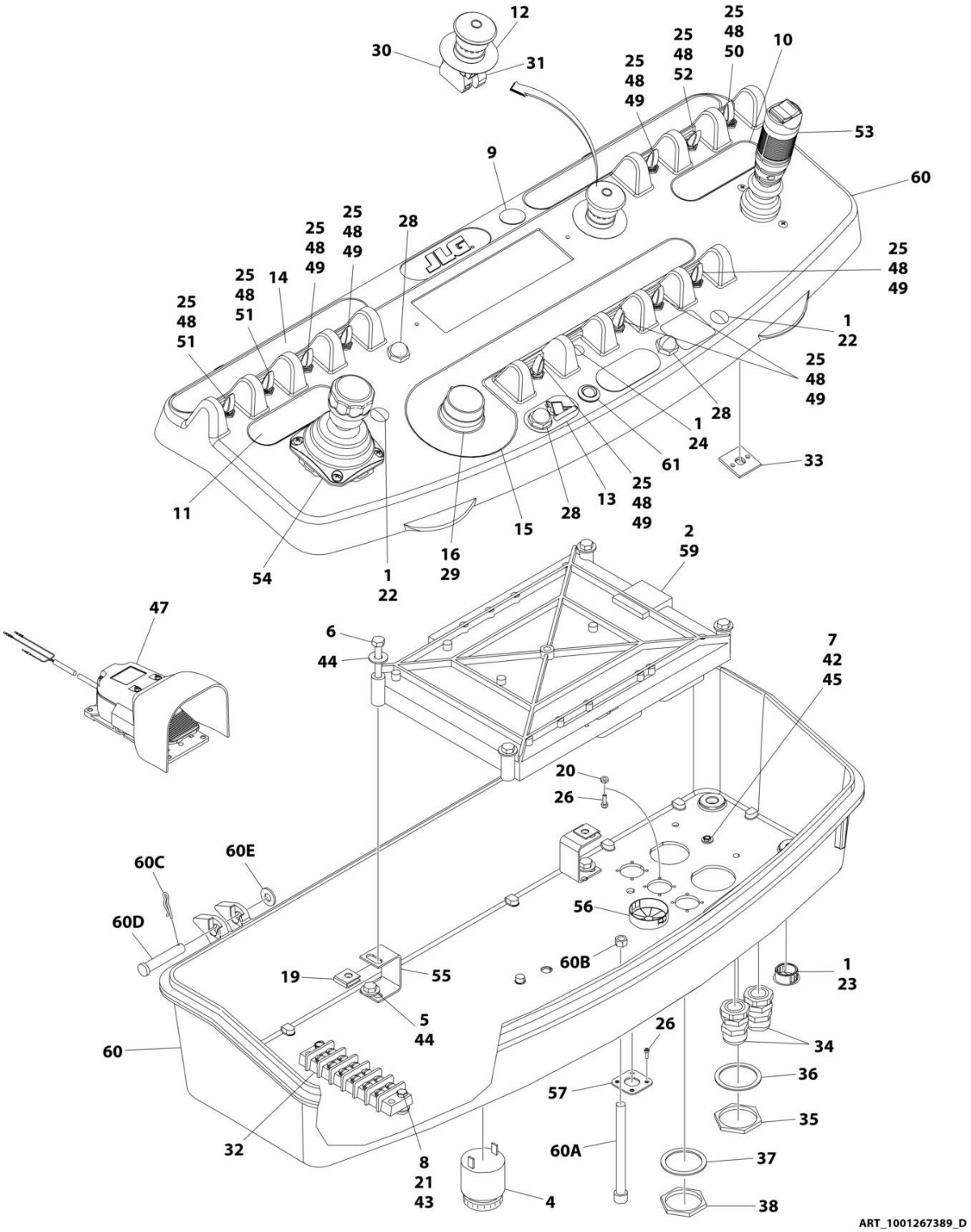

FIGURE 5-15. PLATFORM CONSOLE ASSEMBLEY

ITEM	PART NUMBER	QTY	DESCRIPTION	REV
	1001267389	Ref	PLATFORM CONSOLE ASSEMBLY	D
1	0100009	AR	Sealant	
2	0100035	AR	Compound, Locking	
4	0140011	1	Alarm	
5	0641405	4	Bolt 1/4 x 5/8	
6	0641414	4	Bolt 1/4 x 1-3/4	
7	0720804	1	Screw #8 x 1/2	
8	0721006	2	Bolt #10 x 3/4	
9	1671314	1	Cover, Hole	
10	1702565	1	Decal - Drive and Steer	
11	1702566	1	Decal - Lift and Swing	
12	1704260	1	Decal - EMS	
13	1705171	1	Decal - Jib Stow	
14	1705744	1	Decal - Horn	
15	1705745	1	Decal - Function Speed	
16	2560136	1	Handle, Knob	
19	3300353	4	Nut, Tinnerman	
20	3300482	2	Nut M2.5	
21	3311005	2	Nut #10	
22	3520026	2	Plug, Hole	
23	3520030	1	Plug, Hole	
24	3520054	1	Plug, Hole	
25	3790012	11	O-Ring	
26	3900349	12	Capscrew M2.5	
28	4360387	3	Switch, Pushbutton	
29	4360407	1	Controller, Speed	
29	See Note	NSS	Gasket "Top Hat" (Included with Switch) (Note: Not Available - Purchase Complete Controller)	
30	1001274559	1	Switch, Emergency Stop	
31	4360476	1	Block, Contact	
32	4460007	1	Bar, Buss	
33	4460234	AR	Mount, Tie-Strap	
34	4460428	2	Connector, Strain Relief	
35	4460470	1	Nut, Terminal	
36	4460471	1	Washer, Terminal	
37	4460496	1	Nut, Terminal	
38	4460497	1	Washer, Terminal	
42	4750800	1	Washer #8	
43	4751000	2	Washer #10	
44	4751400	8	Washer 1/4	
45	4760800	1	Washer	
46	4922666	1	Harness, Analyzer Cable (Not Shown - See Separate Breakdown in ELECTRICAL Section)	
47	1001117174	1	Footswitch Assembly (See Separate Breakdown in this Section)	
48	1001155044	11	Nut 15/32-32	
49	1001155045	7	Switch, Toggle	
50	1001159256	1	Switch, Toggle	
51	1001161709	2	Switch, Toggle	
52	1001161710	1	Switch, Toggle	
53	1001275628	1	Controller Assembly (Drive and Steer)	

SECTION 5 - PLATFORM

ITEM	PART NUMBER	QTY	DESCRIPTION	REV
54	1001275629	1	Controller Assembly (Lift and Swing)	
55	1001172760	4	Bracket, Support	
56	1001185281	1	Plug	
57	1001220929	1	Mount, Connector	
58	1001241891	1	Harness, Console Box (Not Shown - See Separate Breakdown in ELECTRICAL Section)	
59	1600343	1	Module, Platform Control (Note: Re-calibration Required when Replaced)	
60	1001265905	1	Box, Console	B
60A	0630568	1	Screw 3/8 x 4-1/2	
60B	3311601	1	Nut 3/8	
60C	3430616	2	Clevis	
60D	3470003	2	Pin	
60E	4711600	2	Washer 3/8	
61	1001206532	1	Light, Indicator	
62	4240099	AR	Tie-Strap (Not Shown)	

FIGURE 5-16. BOOM CONTROL SELECT SWITCH INSTALLATION

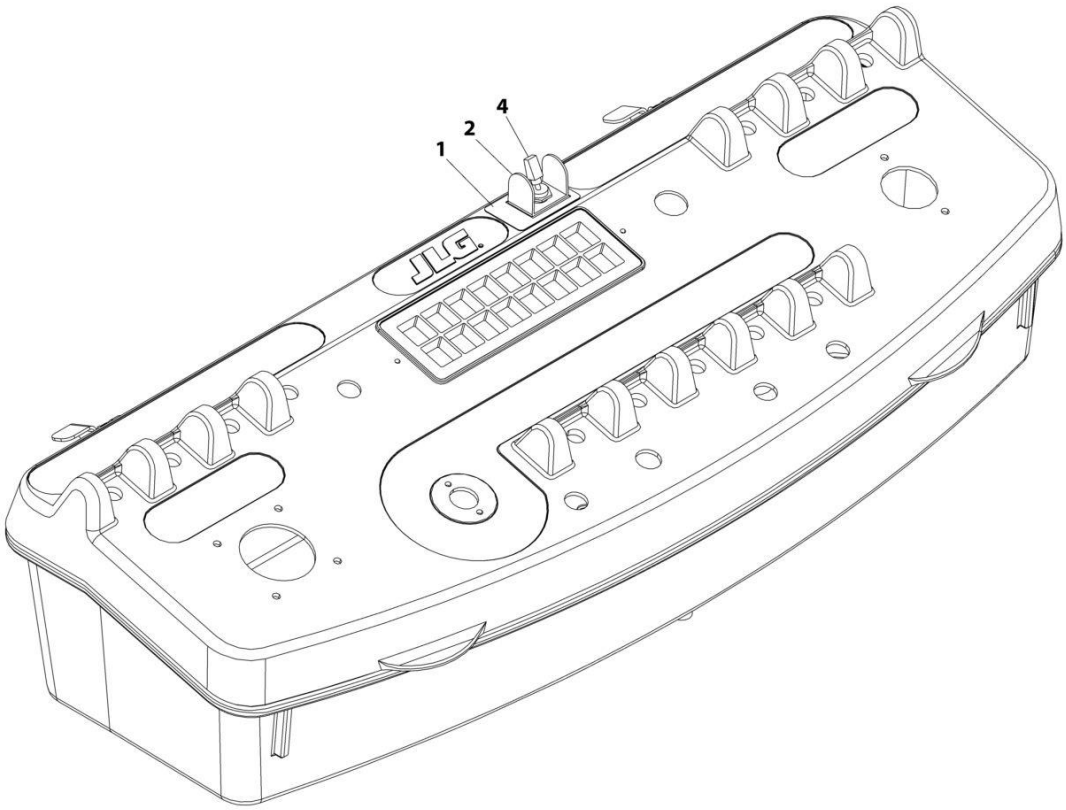

ART_0275098

FIGURE 5-16. BOOM CONTROL SELECT SWITCH INSTALLATION

ITEM	PART NUMBER	QTY	DESCRIPTION	REV
	0275098	Ref	BOOM CONTROL SELECT SWITCH INSTALLATION	B
1	1706741	1	Decal - Boom Control Select	
2	4060906	1	Guard	
4	4360336	1	Switch, Toggle	

FIGURE 5-17. FALL ARREST INSTALLATION (BOLT - ON EXTERNAL) 4FFT/1.22M PLATFORM)

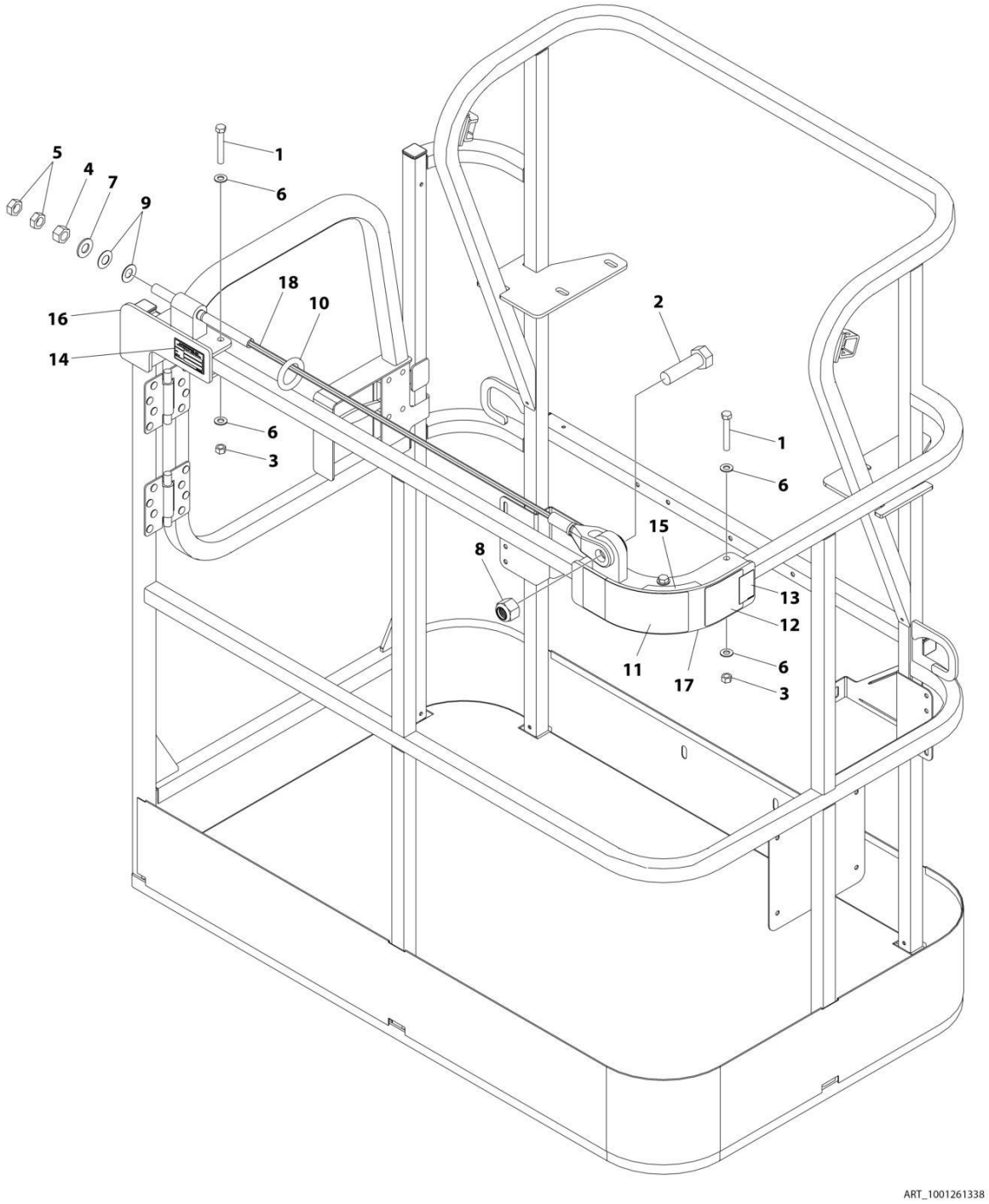

FIGURE 5-17. FALL ARREST INSTALLATION (BOLT - ON EXTERNAL) 4FFT/1.22M PLATFORM)

ITEM	PART NUMBER	QTY	DESCRIPTION	REV
	1001261338	Ref	FALL ARREST INSTALLATION	A
1	0681620	6	Bolt 3/8 x 2-1/2	
2	0682424	1	Bolt 7/8 x 3	
3	3271605	6	Nut 3/8	
4	3272001	1	Nut 5/8	
5	3312002	2	Nut 5/8	
6	4711600	12	Washer 3/8	
7	4712000	1	Washer 5/8	
8	88521214	1	Nut 7/8	
9	1001236891	2	Washer	
10	1001236895	1	Ring	
11	1001238263	1	Decal - Warning Falling Hazard	
12	1001248140	1	Decal - Bolt Fall Arrest Re-Cert	
13	1001248141	1	Decal - Incription	
14	See Note	NSS	Nameplate - Manufacturers Serial Number (Note: Not Available for Purchase)	
15	1001252629	1	Decal - Weight	
16	1001257271	1	Bracket (RH)	
17	1001257274	1	Bracket (LH)	
18	1001261335	1	Rope	

FIGURE 5-18. FALL ARREST INSTALLATION (BOLT - ON EXTERNAL) 6FT/1.82M PLATFORM

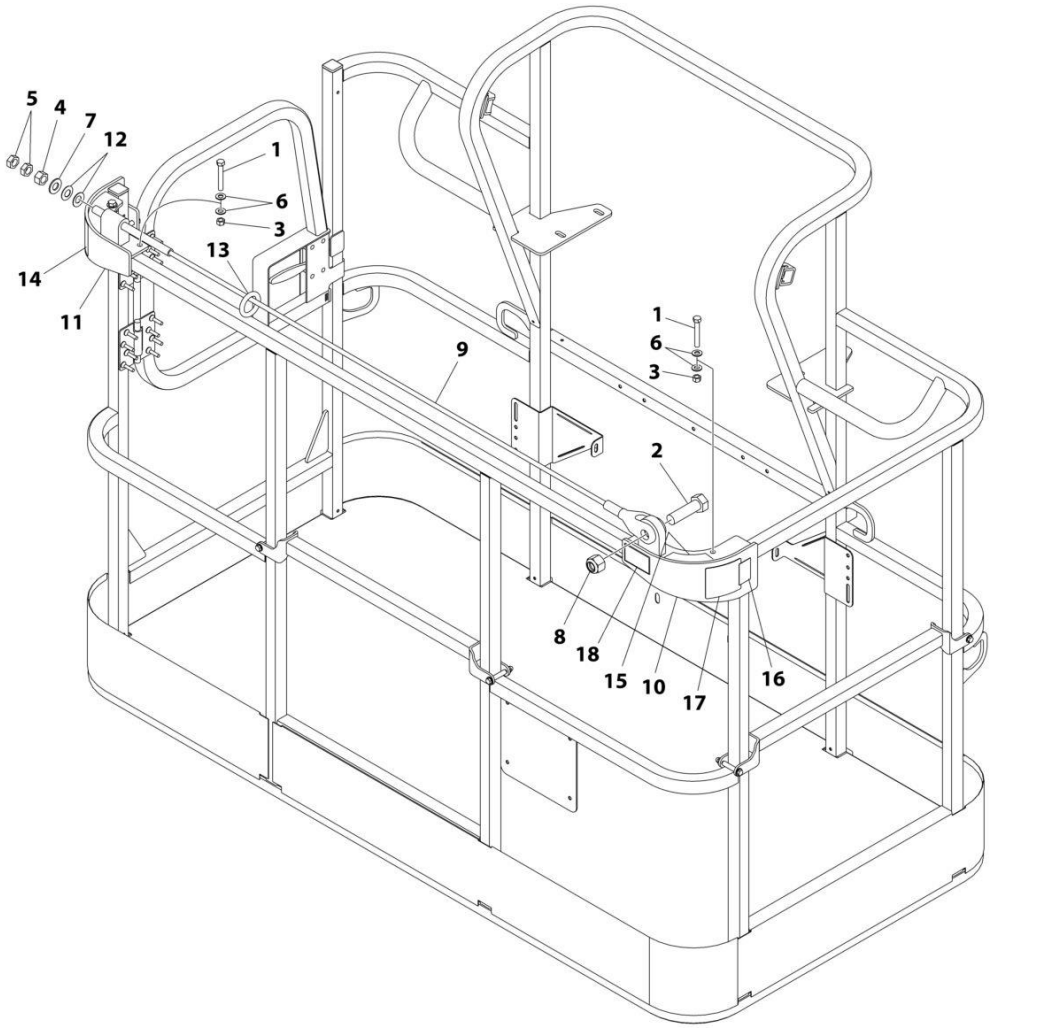

FIGURE 5-18. FALL ARREST INSTALLATION (BOLT - ON EXTERNAL) 6FT/1.82M PLATFORM

ITEM	PART NUMBER	QTY	DESCRIPTION	REV
	1001238463	Ref	FALL ARREST INSTALLATION (BOLT - ON) 6FT/1.82M PLATFORM	C
1	0681620	6	Bolt 3/8 x 2-1/2	
2	0682424	1	Bolt 7/8 x 3	
3	3271605	6	Nut 3/8	
4	3272001	1	Nut 5/8	
5	3312002	2	Nut 5/8	
6	4711600	12	Washer 3/8	
7	4712000	1	Washer 5/8	
8	88521214	1	Nut 7/8	
9	1001231950	1	Rope	
10	1001232010	1	Bracket (RH)	
11	1001232011	1	Bracket (LH)	
12	1001236891	2	Washer	
13	1001236895	1	Ring	
14	1001238263	1	Decal - Warning Falling Hazard	
15	1001252629	1	Decal - Weight	
16	1001248140	1	Decal - Bolt Fall Arrest Re-Cert	
17	1001248141	1	Decal - Inscription	

FIGURE 5-19. FALL ARREST INSTALLATION (BOLT - ON EXTERNAL) 6FT/1.82M PLATFORM (

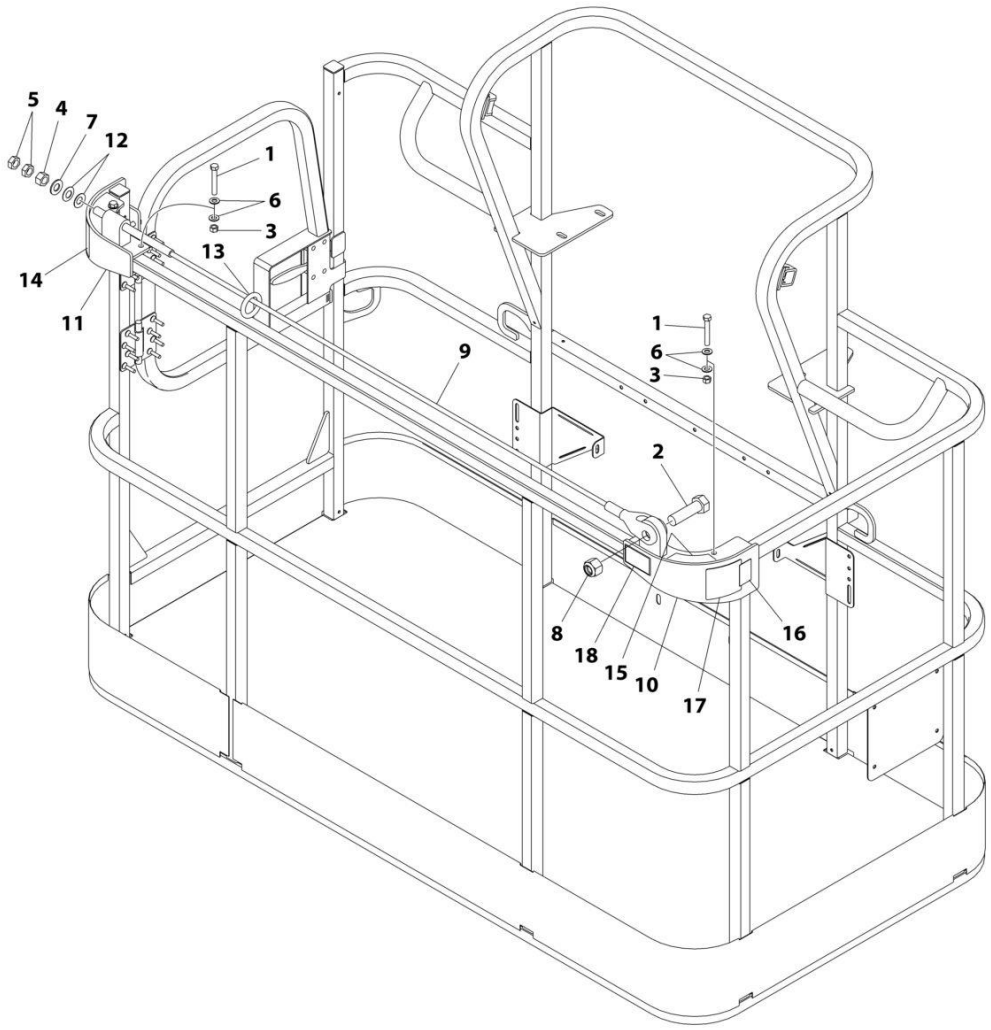

FIGURE 5-19. FALL ARREST INSTALLATION (BOLT - ON EXTERNAL) 6FT/1.82M PLATFORM (

ITEM	PART NUMBER	QTY	DESCRIPTION	REV
	1001236747	Ref	FALL ARREST INSTALLATION (BOLT - ON) 6FT/1.82M PLATFORM	C
1	0681620	6	Bolt 3/8 x 2-1/2	
2	0682424	1	Bolt 7/8 x 3	
3	3271605	6	Nut 3/8	
4	3272001	1	Nut 5/8	
5	3312002	2	Nut 5/8	
6	4711600	12	Washer 3/8	
7	4712000	1	Washer 5/8	
8	88521214	1	Nut 7/8	
9	1001231950	1	Rope	
10	1001232010	1	Bracket (RH)	
11	1001232011	1	Bracket (LH)	
12	1001236891	2	Washer	
13	1001236895	1	Ring	
14	1001238263	1	Decal - Warning Falling Hazard	
15	1001252629	1	Decal - Weight	
16	1001248140	1	Decal - Bolt Fall Arrest Re-Cert	
17	1001248141	1	Decal - Inscription	

FIGURE 5-20. FALL ARREST INSTALLATION (BOLT - ON EXTERNAL) 8FT/2.4M PLATFORM

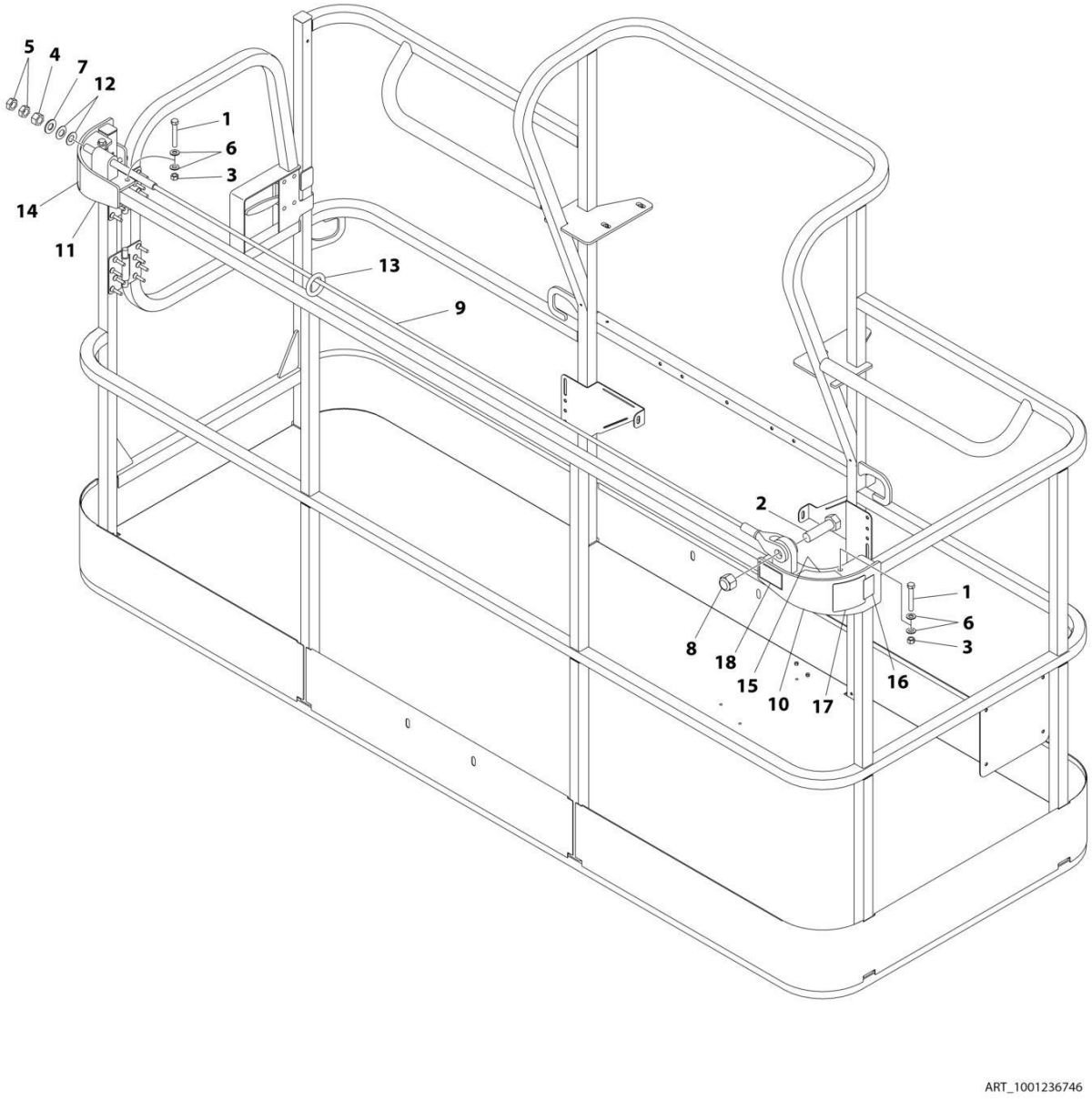

FIGURE 5-20. FALL ARREST INSTALLATION (BOLT - ON EXTERNAL) 8FT/2.4M PLATFORM

ITEM	PART NUMBER	QTY	DESCRIPTION	REV
	1001236746	Ref	FALL ARREST INSTALLATION (BOLT - ON) 8FT/2.4M PLATFORM	C
1	0681620	6	Bolt 3/8 x 2-1/2	
2	0682424	1	Bolt 7/8 x 3	
3	3271605	6	Nut 3/8	
4	3272001	1	Nut 5/8	
5	3312002	2	Nut 5/8	
6	4711600	12	Washer 3/8	
7	4712000	1	Washer 5/8	
8	88521214	1	Nut 7/8	
9	1001231949	1	Rope	
10	1001232010	1	Bracket (RH)	
11	1001232011	1	Bracket (LH)	
12	1001236891	2	Washer	
13	1001236895	1	Ring	
14	1001238263	1	Decal - Warning Falling Hazard	
15	1001252629	1	Decal - Weight 23LBS/10.4KG	
16	1001248140	1	Decal - Bolt Fall Arrest Re-Cert	
17	1001248141	1	Decal - Inscription	

FIGURE 5-21. FOOTSWITCH ASSEMBLY

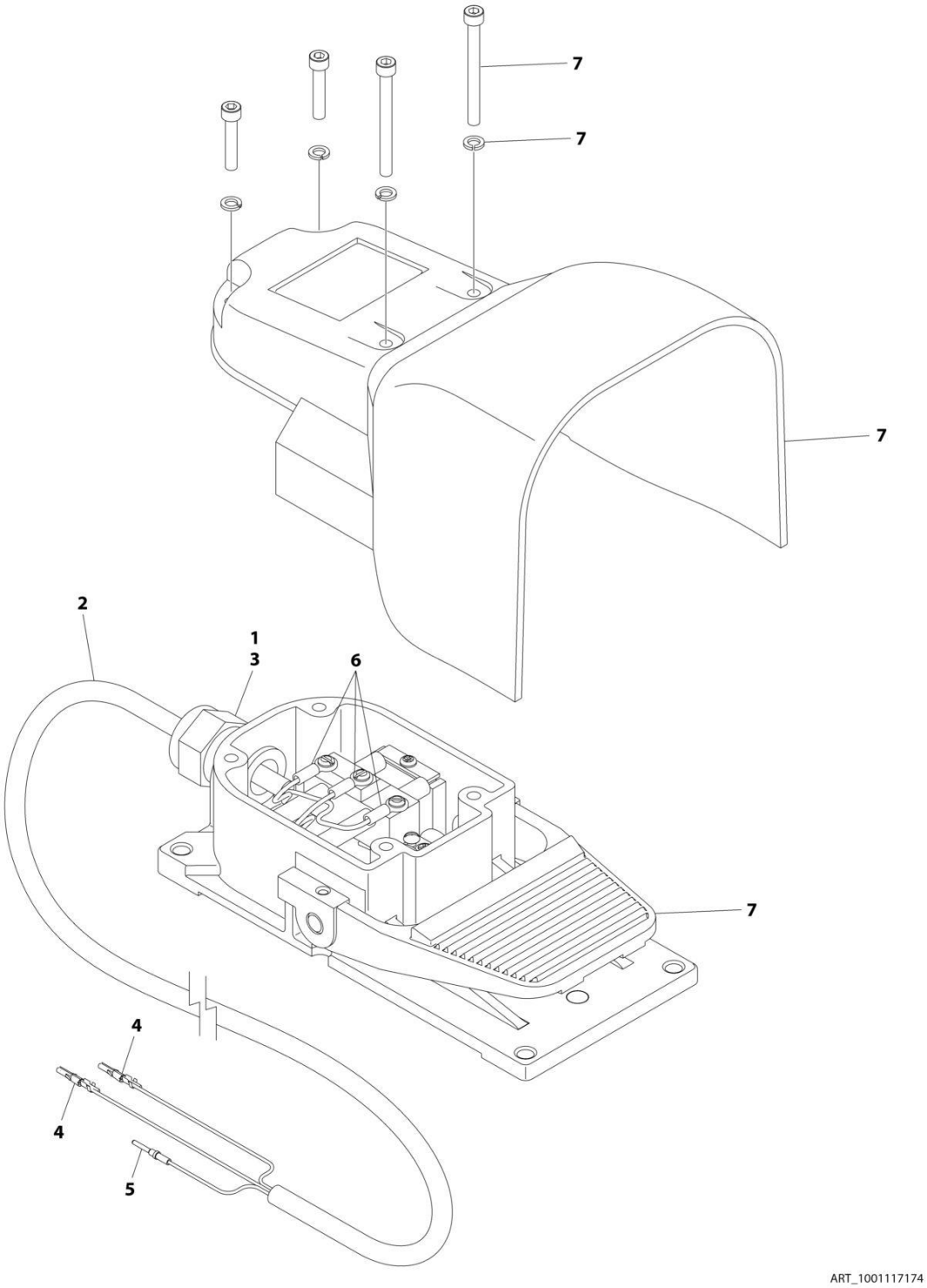

FIGURE 5-21. FOOTSWITCH ASSEMBLY

ITEM	PART NUMBER	QTY	DESCRIPTION	REV
	1001117174	Ref	FOOTSWITCH ASSEMBLY	C
1	0100020	AR	Sealant	
2	1060918	7.5 ft/ 2.3m	Cable, Electrical - 18/3	
3	4460071	1	Connector, Strain Relief	
4	4460226	2	Socket, Female	
5	4460464	1	Pin, Male	
6	1001098122	3	Terminal	
7	1001117172	1	Footswitch	
7	70002902	1	Switch, 20Amp	
7	70002903	1	Gasket	
7	70002905	1	Cover	
7	70002904	1	Kit, Replacement Bolt	

FIGURE 5-22. LIGHT PANEL INSTALLATION (MACHINES WITH SN STARTING WITH 03)

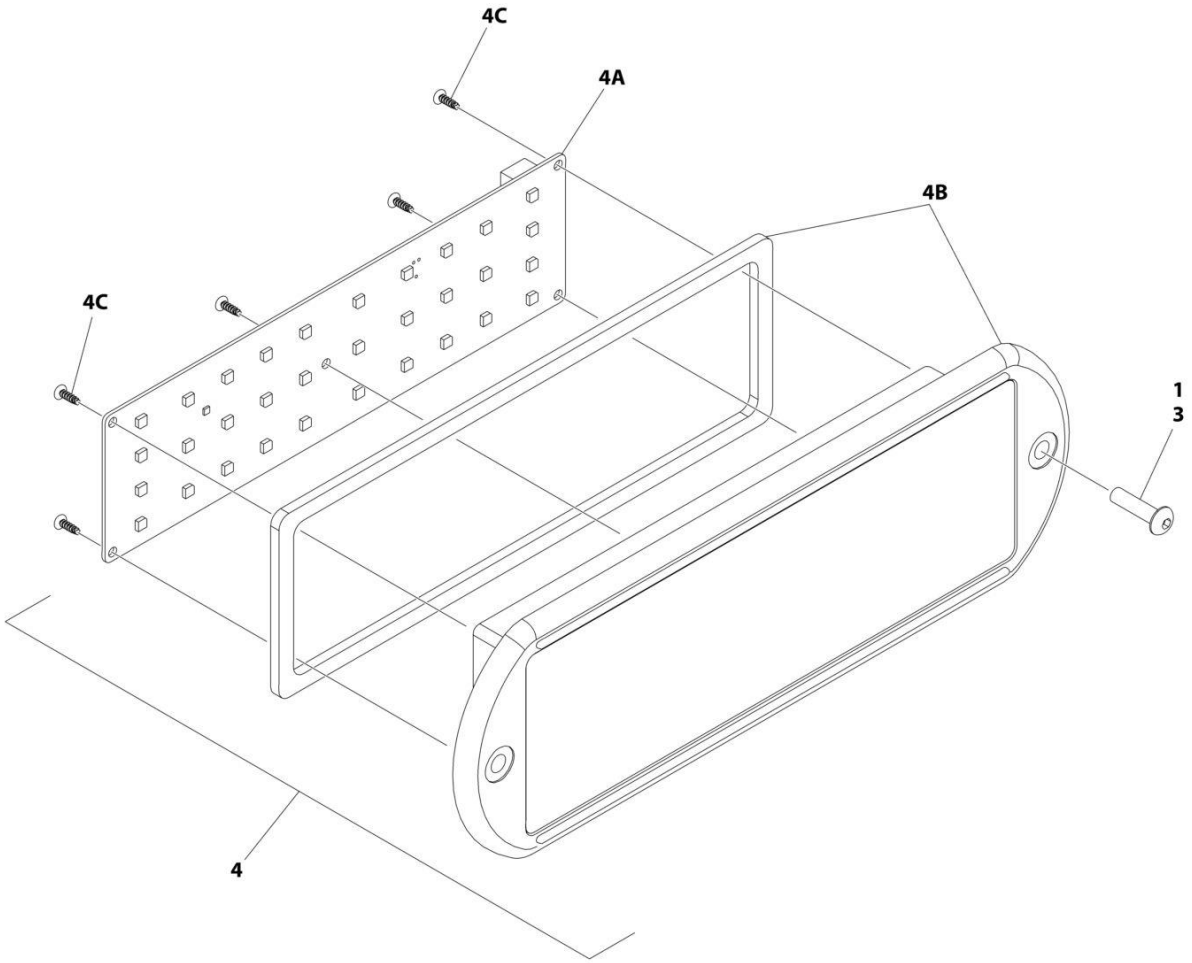

FIGURE 5-22. LIGHT PANEL INSTALLATION (MACHINES WITH SN STARTING WITH 03)

ITEM	PART NUMBER	QTY	DESCRIPTION	REV
	1001233959	Ref	LIGHT PANEL INSTALLATION - PLATFORM CONSOLE	D
1	0100035	AR	Compound, Locking	
3	0630518	2	Screw #10 x 3/4	
4	1001284583	1	Light Panel Assembly	A
4A	1001282106	1	Panel, LED Light	
4B	1001284582	1	Lens, Icon (Includes Gasket)	
4C		Ref	Screw	

FIGURE 5-23. LIGHT PANEL INSTALLATION (MACHINES WITH SN STARTING WITH B3)

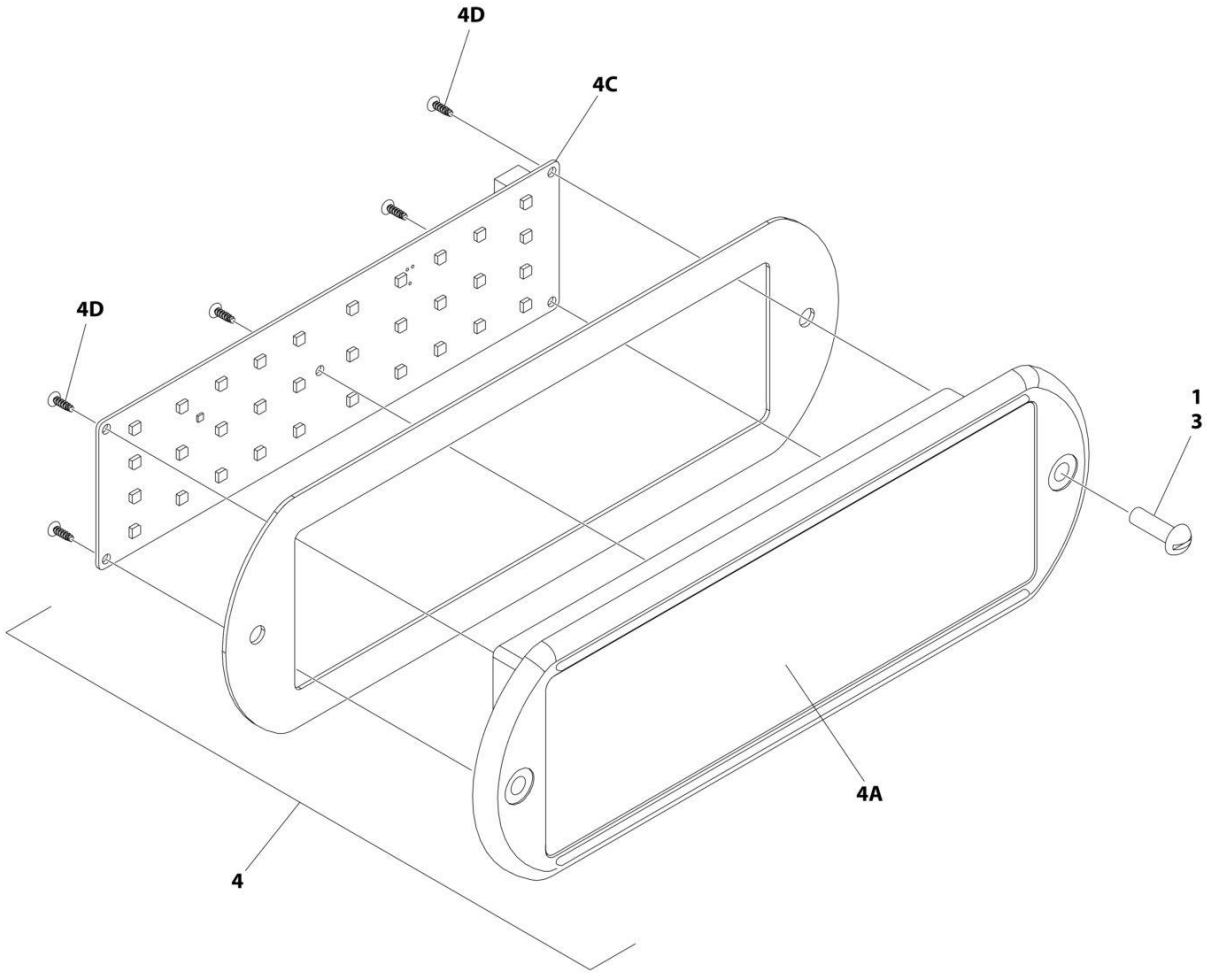

FIGURE 5-23. LIGHT PANEL INSTALLATION (MACHINES WITH SN STARTING WITH B3)

ITEM	PART NUMBER	QTY	DESCRIPTION	REV
	1001241398	Ref	LIGHT PANEL INSTALLATION - PLATFORM CONSOLE	B
1	0100035	AR	Compound, Locking	
3	3911010	2	Screw #10 x 5/8	
4	1001238671	1	Light Panel Assembly	
4A	1001236087	1	Lens, I-Con	
4C	1001238732	1	Panel, LED Light	
4D		Ref	Screw	

FIGURE 5-24. PLASMA CUTTER ASSEMBLY

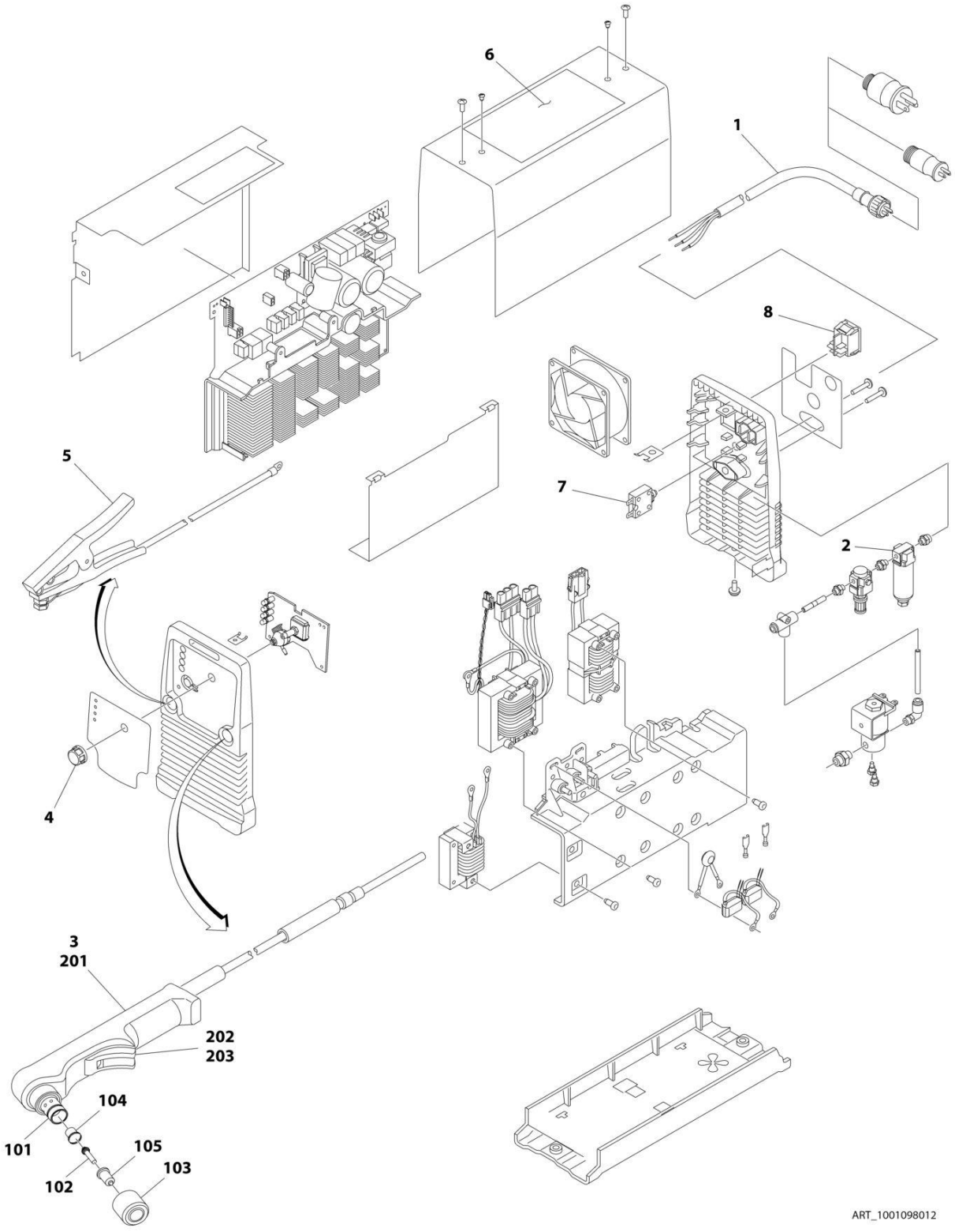

FIGURE 5-24. PLASMA CUTTER ASSEMBLY

ITEM	PART NUMBER	QTY	DESCRIPTION	REV
	1001098012	Ref	PLASMA CUTTER ASSEMBLY	A
		Ref	Note: For Other Components, contact your Miller Welder Dealer.	
1	70001424	1	Cable, Power	
1	70001425	1	Decal - Voltage Warning	
2	70001427	1	Filter, Regulator	
3	70001428	1	Torch Assembly (See Items 101-203 for Breakdown)	
4	7024471	1	Knob	
5	70001429	1	Clamp with Cable	
6	70001430	1	Decal - Caution	
7	70001431	1	Breaker, Circuit	
8	70001432	1	Switch, Rocker	
	70001428	Ref	TORCH ASSEMBLY	
101	7024530	1	O-Ring	
102	7024531	1	Electrode	
103	7024532	1	Cup, Retaining	
104	7024533	1	Swirl Ring	
105	7024534	1	Tip	
201	7024535	1	Handle, Torch	
202	7024536	1	Switch	
203	7024537	1	Trigger	

FIGURE 5-25. SKYCUTTER INSTALLATION (ANSI, ANSI EXPORT, CHINA, CSA AND JAPANESE SPECS)

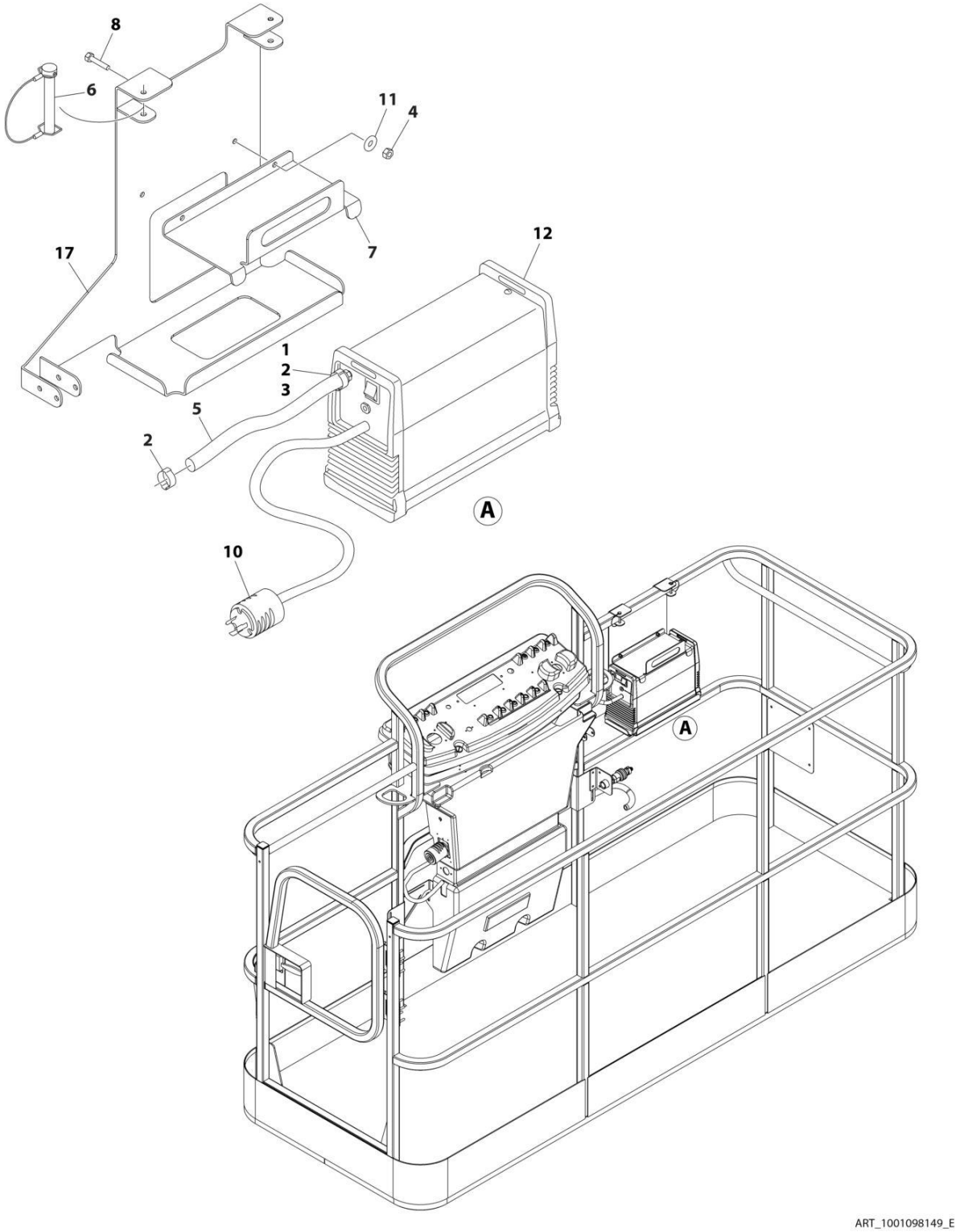

FIGURE 5-25. SKYCUTTER INSTALLATION (ANSI, ANSI EXPORT, CHINA, CSA AND JAPANESE SPECS)

ITEM	PART NUMBER	QTY	DESCRIPTION	REV
	1001098149	Ref	SKYCUTTER INSTALLATION	E
		Ref	Note: When replacing platform on machines with SkyCutter option, new bracket p/n 1001145405 must be purchased to accommodate SkyCutter components.	
1	0100020	AR	Sealant	
2	1320177	2	Clamp, Hose	
3	2180832	1	Fitting, NPT/Barbed	
4	3290605	2	Nut M6	
5	2720160	3 ft	Hose	
6	3421453	3	Pin	
7	3576799	1	Plate, Hold-Down	
8	4010608	2	Screw M6 x 16	
10	4460971	1	Plug, Twistlock	
11	4811700	2	Washer M6	
12	1001098012	1	Plasma Cutter Assembly (See Separate Breakdown in this Section)	
17	1001145405	1	Support	

FIGURE 5-26. SKYEYE INSTALLATION

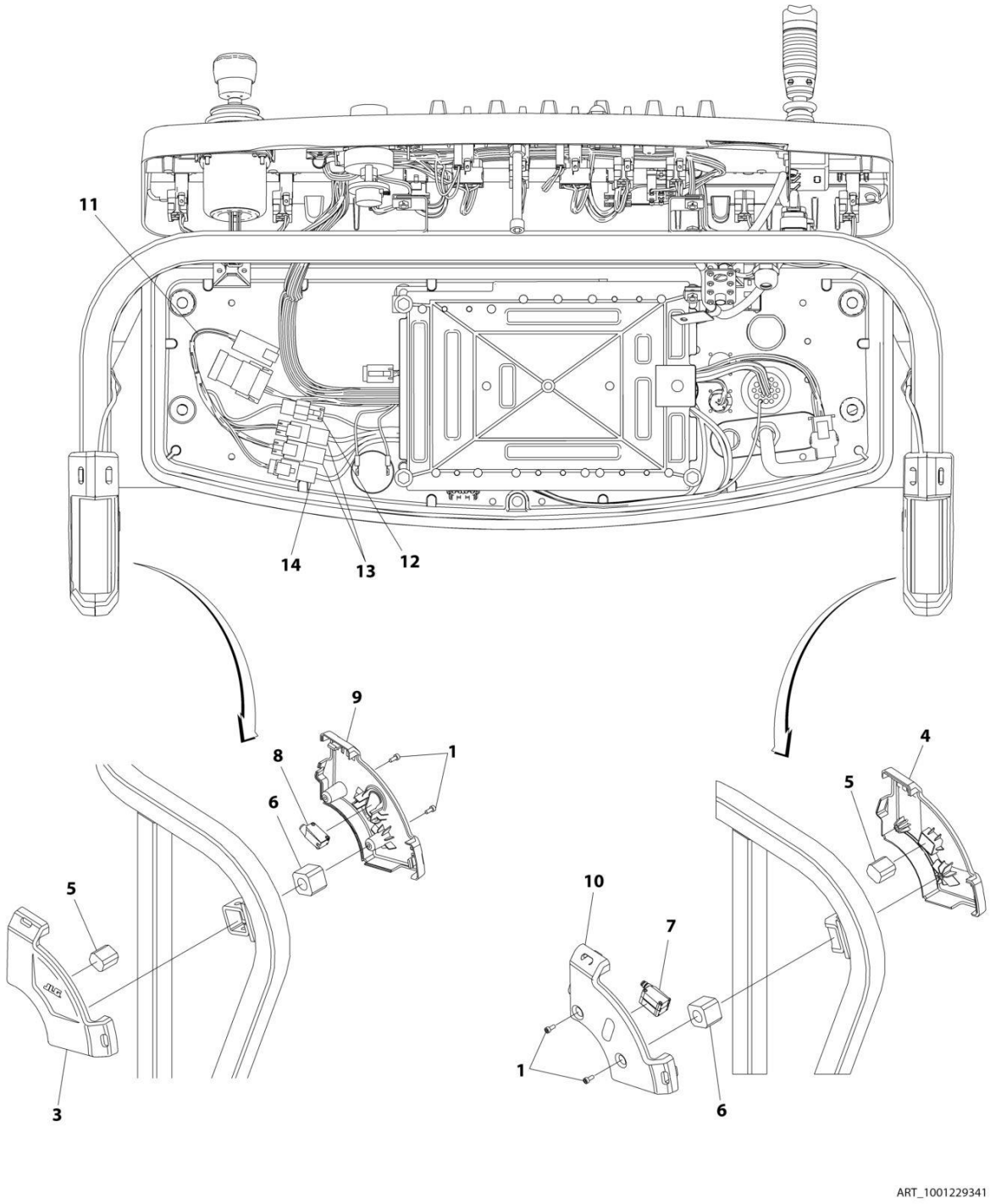

FIGURE 5-26. SKYEYE INSTALLATION

ITEM	PART NUMBER	QTY	DESCRIPTION	REV
	1001229341	Ref	SKYEYE INSTALLATION	B
1	4031505	4	Bolt M4 x 10	
2	4240033	AR	Tie-Strap (Not Shown)	
3	1001227633	1	Housing, LH Outer	
4	1001227634	1	Housing, RH Outer	
5	1001227985	2	Shim	
6	1001227987	2	Shim	
7	1001228224	2	Sensor, Receiver	
8	1001228225	1	Sensor, Emitter	
9	1001232164	1	Housing, LH Inner	
10	1001232165	1	Housing, RH Inner	
11	1001237865	1	Harness, Skyeye Intermediate (See Separate Breakdown in ELECTRICAL Section)	
12	1001238319	NLA	Harness, Skyeye Drain Jumper	
12	1001187674	1	Plug, Male - 2 Position	
12	4460942	1	Terminal	
12	4460466	1	Plug, Terminal	
12	4460508	1	Pin, Male	
13	1001237863	2	Harness, Skyeye Receiver (See Separate Breakdown in ELECTRICAL Section)	
14	1001237864	1	Harness, Skyeye Emitter (See Separate Breakdown in ELECTRICAL Section)	

FIGURE 5-27. SKYGLAZIER INSTALLATION (ANSI AND CSA SPECS)

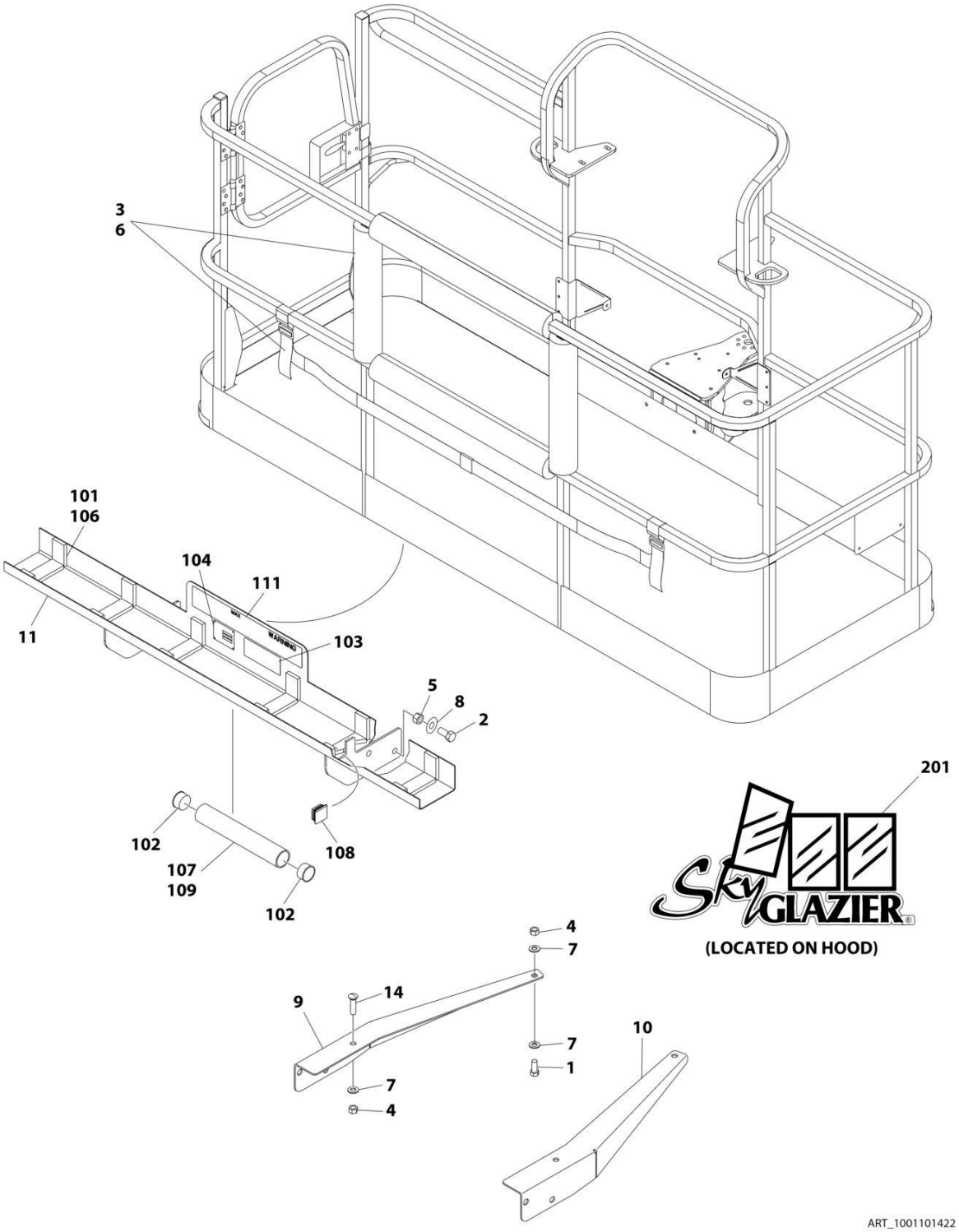

FIGURE 5-27. SKYGLAZIER INSTALLATION (ANSI AND CSA SPECS)

ITEM	PART NUMBER	QTY	DESCRIPTION	REV
	1001101422	Ref	SKYGLAZIER INSTALLATION	C
1	0642012	2	Bolt 5/8 x 1-1/2	
2	0642212	4	Bolt 3/4 x 1-1/2	
3	2902212	1	Bumpers and Strap Kit	
3	0940102	1	Bumper Only	
3	4240149	1	Strap Only	
4	3312005	4	Nut 5/8	
5	3312205	4	Nut 3/4	
6	4420014	AR	Tape	
7	4712000	6	Washer 5/8	
8	4712200	8	Washer 3/4	
9	1001099366	1	Support	
10	1001099367	1	Support	
11	1001101421	1	Tray Assembly (See Items 101-111 for Breakdown)	
14	8310129	2	Bolt 3/4 x 2-1/2	
	1001101421	Ref	TRAY ASSEMBLY	F
101	0100081	AR	Adhesive	
102	1120555	2	Cap, Tube	
103	1701509	1	Decal - Manual	
104	See Note	NSS	Nameplate - Serial Number (Note: Not Available for Purchase)	
106	3340956	1	Pad Kit	
107	3460334	1	Tube	
108	3520071	2	Plug	
109	4420066	AR	Tape, Double Sided	
111	1001163131	2	Decal - Glazier Capacity	
	0272418	Ref	SKYGLAZIER DECAL INSTALLATION	4
201	1705358	2	Decal - SkyGlazier	

FIGURE 5-28. SKYGLAZIER INSTALLATION (BRAZIL SPECS)

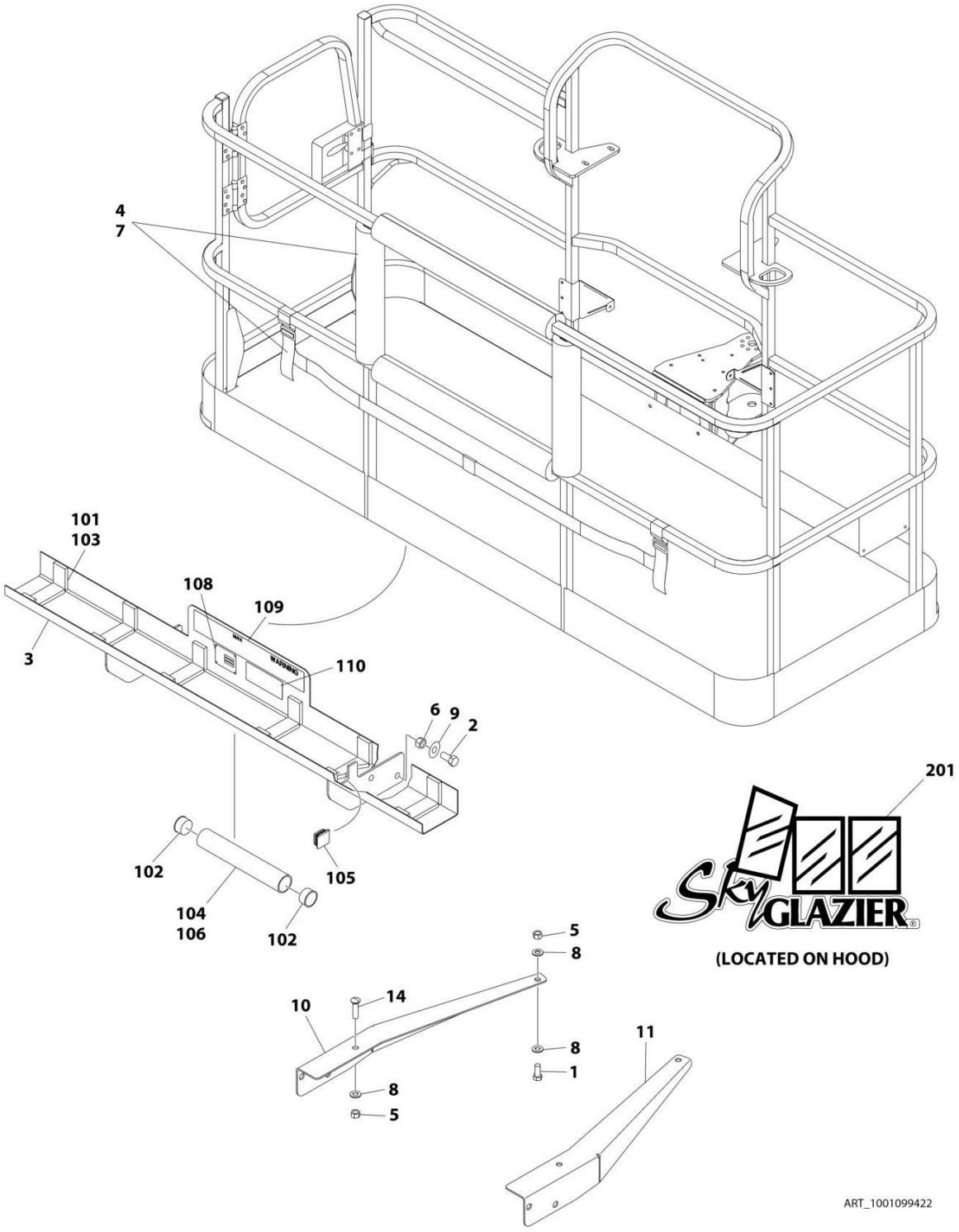

FIGURE 5-28. SKYGLAZIER INSTALLATION (BRAZIL SPECS)

ITEM	PART NUMBER	QTY	DESCRIPTION	REV
	1001099422	Ref	SKYGLAZIER INSTALLATION	C
1	0642012	2	Bolt 5/8 x 1-1/2	
2	0642212	4	Bolt 3/4 x 1-1/2	
3	0272951	1	Tray Assembly (See Items 101-110 for Breakdown)	
4	2902212	1	Bumpers and Strap Kit	
4	0940102	1	Bumper Only	
4	4240149	1	Strap Only	
5	3312005	4	Nut 5/8	
6	3312205	4	Nut 3/4	
7	4420014	AR	Tape	
8	4712000	6	Washer 5/8	
9	4712200	8	Washer 3/4	
10	1001099366	1	Support	
11	1001099367	1	Support	
14	8310129	2	Bolt 3/4 x 2-1/2	
	0272951	Ref	TRAY ASSEMBLY	F
101	0100081	AR	Adhesive	
102	1120555	2	Cap, Tube	
103	3340956	1	Pad Kit	
104	3460334	1	Tube	
105	3520071	2	Plug	
106	4420066	AR	Tape, Double Sided	
108	See Note	NSS	Nameplate - Serial Number (Note: Not Available for Purchase)	
109	1001163297	2	Decal - Glazier Capacity	
110	1701509	1	Decal - Manual	
	0272418	Ref	SKYGLAZIER DECAL INSTALLATION	4
201	1705358	2	Decal - SkyGlazier	

FIGURE 5-29. SKYGLAZIER INSTALLATION (DANISH SPECS)

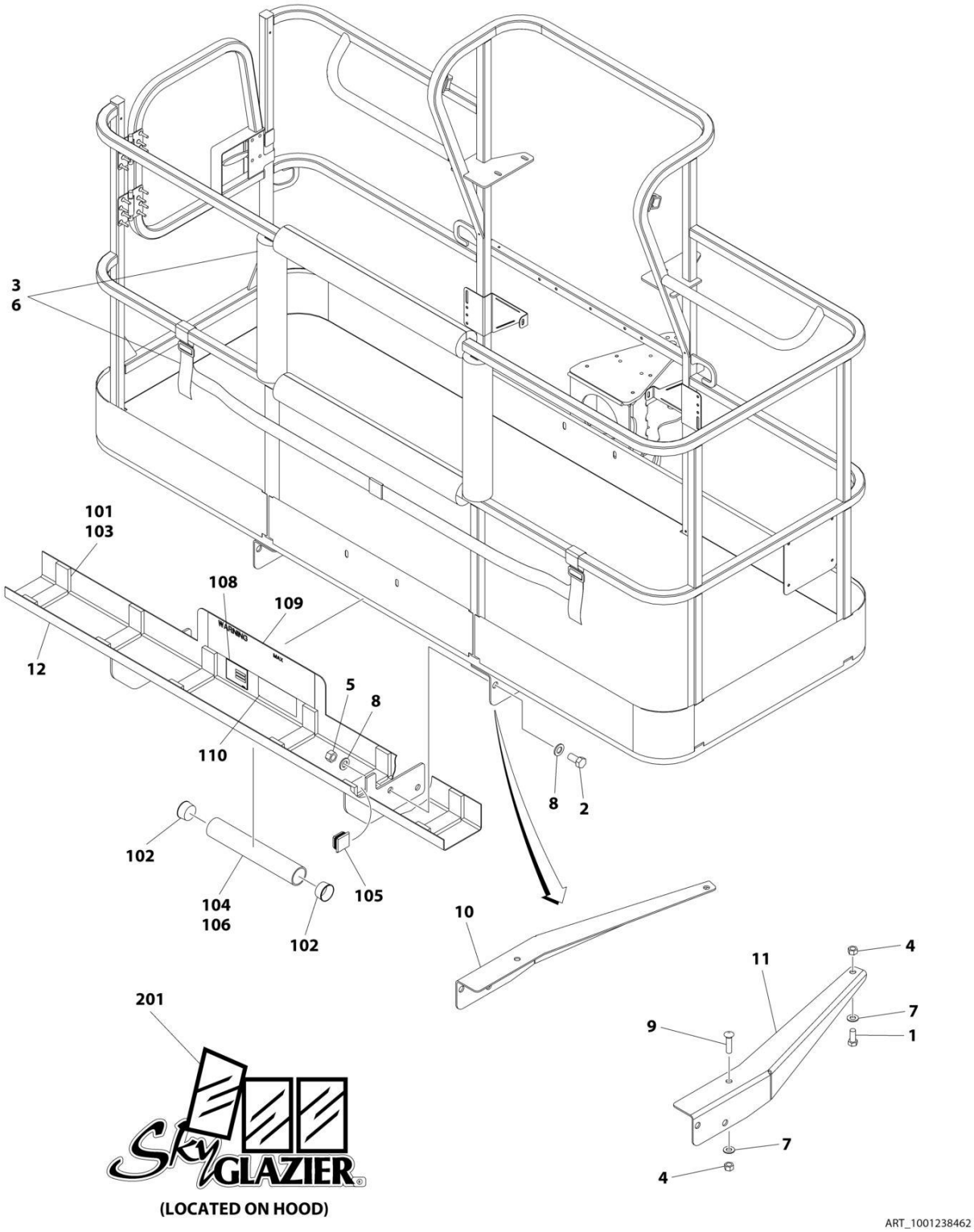

FIGURE 5-29. SKYGLAZIER INSTALLATION (DANISH SPECS)

ITEM	PART NUMBER	QTY	DESCRIPTION	REV
	1001238462	Ref	SKYGLAZIER INSTALLATION	A
1	0642012	2	Bolt 5/8 x 1-1/2	
2	0642212	4	Bolt 3/4 x 1-1/2	
3	2902212	1	Bumpers and Strap Kit	
3	0940102	1	Bumper Only	
3	4240149	1	Strap Only	
4	3312005	4	Nut 5/8	
5	3312205	4	Nut 3/4	
6	4420014	AR	Tape	
7	4712000	4	Washer 5/8	
8	4712200	8	Washer 3/4	
9	8310129	2	Bolt 5/8 x 2-1/2	
10	1001099366	1	Support	
11	1001099367	1	Support	
12	1001238423	1	Tray Assembly (See Items 101-110 for Breakdown)	
	1001238423	Ref	TRAY ASSEMBLY	B
101	0100081	AR	Adhesive	
102	1120555	2	Cap, Tube	
103	3340956	1	Pad Kit	
104	3460334	1	Tube	
105	3520071	2	Plug	
106	4420066	AR	Tape, Double Sided	
108	See Note	NSS	Nameplate - Serial Number (Note: Not Available for Purchase)	
109	1001237705	2	Decal - Glazier Capacity	
110	1701509	1	Decal - Manual	
	0272418	Ref	SKYGLAZIER DECAL INSTALLATION	4
201	1705358	2	Decal - SkyGlazier	

FIGURE 5-30. SKYGLAZIER INSTALLATION (FINNISH SPECS)

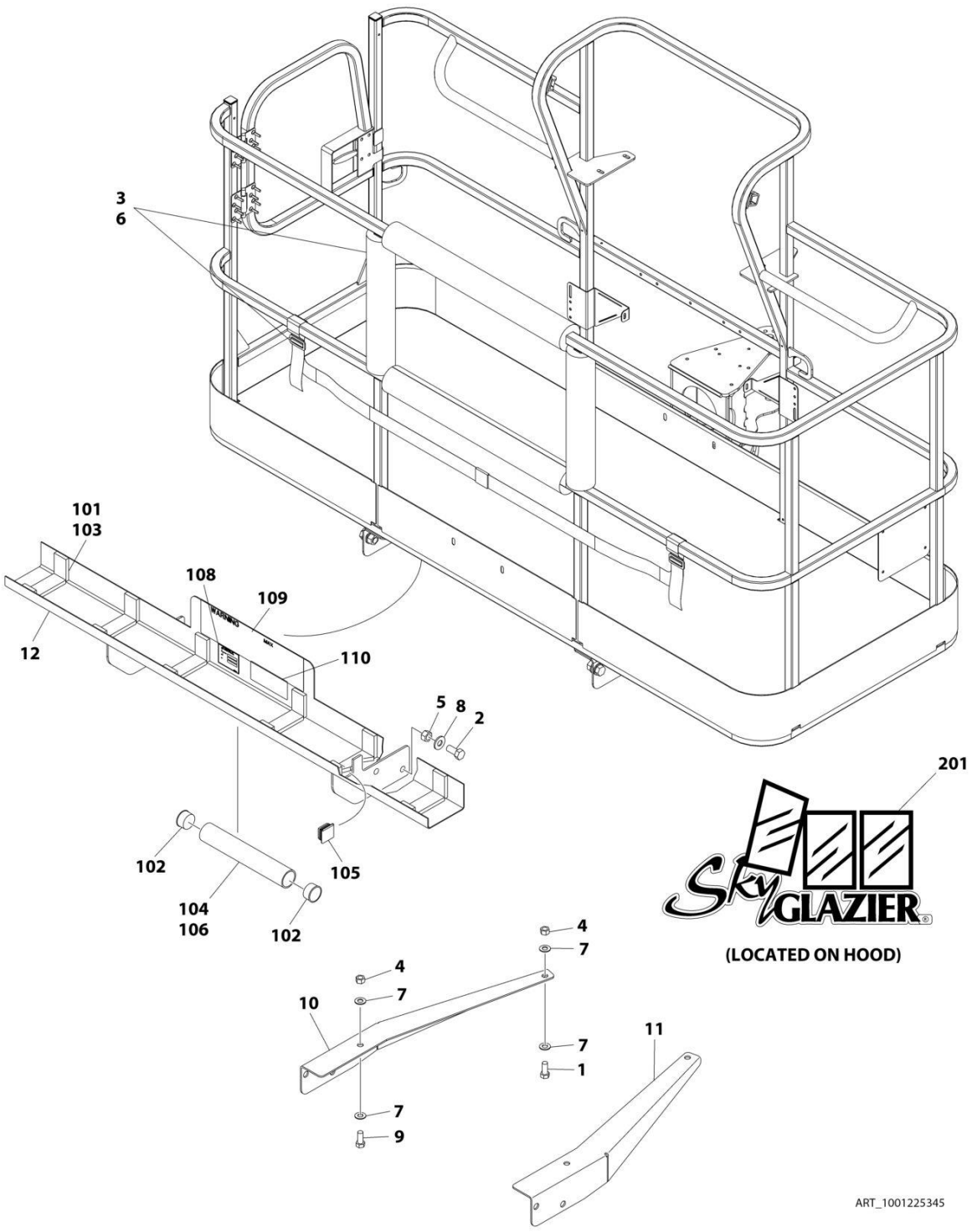

FIGURE 5-30. SKYGLAZIER INSTALLATION (FINNISH SPECS)

ITEM	PART NUMBER	QTY	DESCRIPTION	REV
	1001225345	Ref	SKYGLAZIER INSTALLATION	A
1	0642012	2	Bolt 5/8 x 1-1/2	
2	0642212	4	Bolt 3/4 x 1-1/2	
3	2902212	1	Bumpers and Strap Kit	
3	0940102	1	Bumper Only	
3	4240149	1	Strap Only	
4	3312005	4	Nut 5/8	
5	3312205	4	Nut 3/4	
6	4420014	AR	Tape	
7	4712000	6	Washer 5/8	
8	4712200	8	Washer 3/4	
9	8310129	2	Bolt 5/8 x 2-1/2	
10	1001099366	1	Support	
11	1001099367	1	Support	
12	1001181142	1	Tray Assembly (See Items 101-110 for Breakdown)	
	1001181142	Ref	TRAY ASSEMBLY	B
101	0100081	AR	Adhesive	
102	1120555	2	Cap, Tube	
103	3340956	1	Pad Kit	
104	3460334	1	Tube	
105	3520071	2	Plug	
106	4420066	AR	Tape, Double Sided	
108	See Note	NSS	Nameplate - Serial Number (Note: Not Available for Purchase)	
109	1001181134	2	Decal - Glazier Capacity	
110	1701509	1	Decal - Manual	
	0272418	Ref	SKYGLAZIER DECAL INSTALLATION	4
201	1705358	2	Decal - SkyGlazier	

FIGURE 5-31. SKYGLAZIER INSTALLATION (FRENCH SPECS)

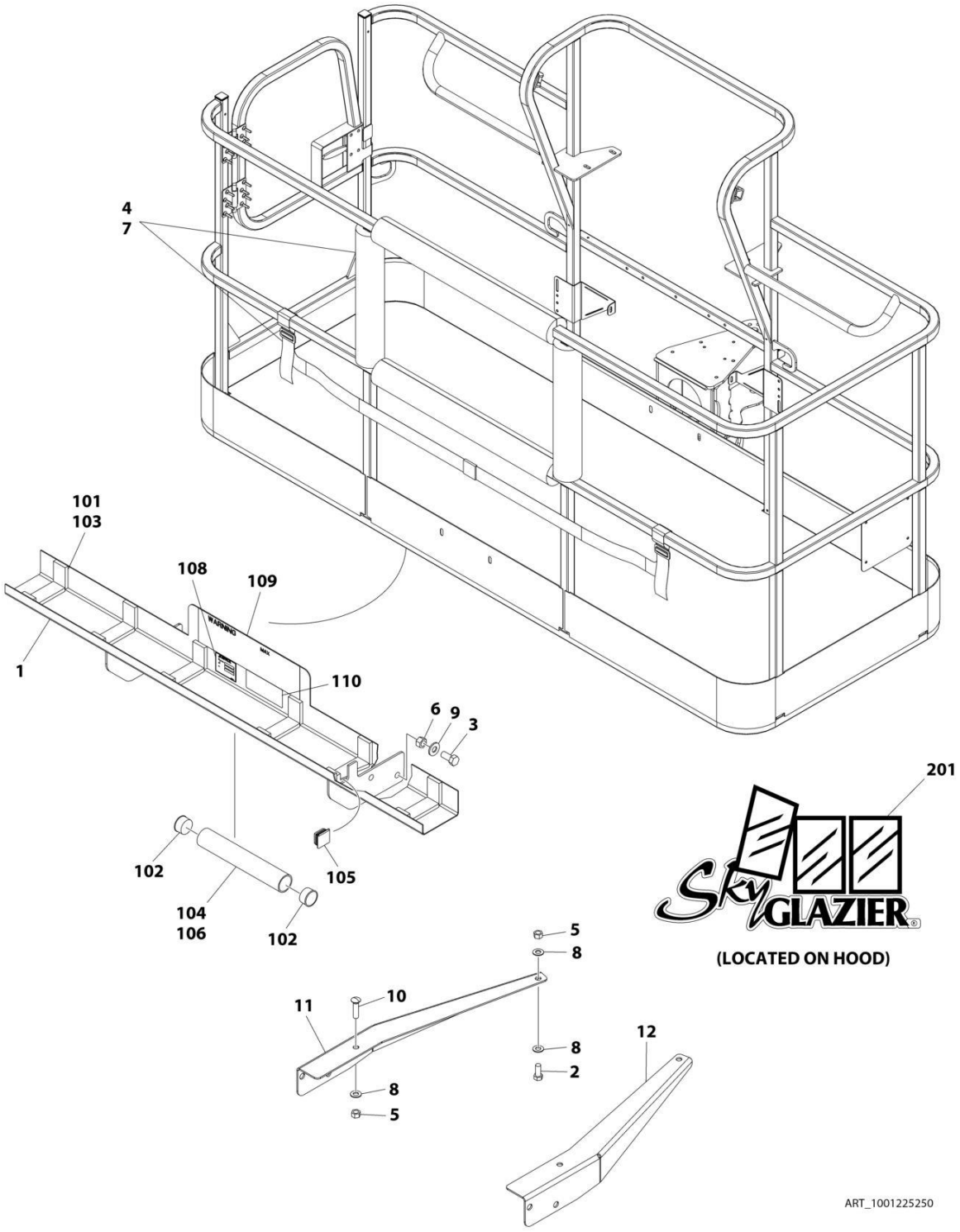

FIGURE 5-31. SKYGLAZIER INSTALLATION (FRENCH SPECS)

ITEM	PART NUMBER	QTY	DESCRIPTION	REV
	1001225250	Ref	SKYGLAZIER INSTALLATION	A
1	0272949	1	Tray Assembly (See Items 101-110 for Breakdown)	
2	0642012	2	Bolt 5/8 x 1-1/2	
3	0642212	4	Bolt 3/4 x 1-1/2	
4	2902212	1	Bumpers and Strap Kit	
4	0940102	1	Bumper Only	
4	4240149	1	Strap Only	
5	3312005	4	Nut 5/8	
6	3312205	4	Nut 3/4	
7	4420014	AR	Tape	
8	4712000	6	Washer 5/8	
9	4712200	8	Washer 3/4	
10	8310129	2	Bolt 5/8 x 2-1/2	
11	1001099366	1	Support	
12	1001099367	1	Support	
	0272949	Ref	TRAY ASSEMBLY	E
101	0100081	AR	Adhesive	
102	1120555	2	Cap, Tube	
103	3340956	1	Pad Kit	
104	3460334	1	Tube	
105	3520071	2	Plug	
106	4420066	AR	Tape, Double Sided	
108	See Note	NSS	Nameplate - Serial Number (Note: Not Available for Purchase)	
109	1001163293	2	Decal - Glazier Capacity	
110	1701509	1	Decal - Manual	
	0272418	Ref	SKYGLAZIER DECAL INSTALLATION	4
201	1705358	2	Decal - SkyGlazier	

FIGURE 5-32. SKYGLAZIER INSTALLATION (GERMAN SPECS)

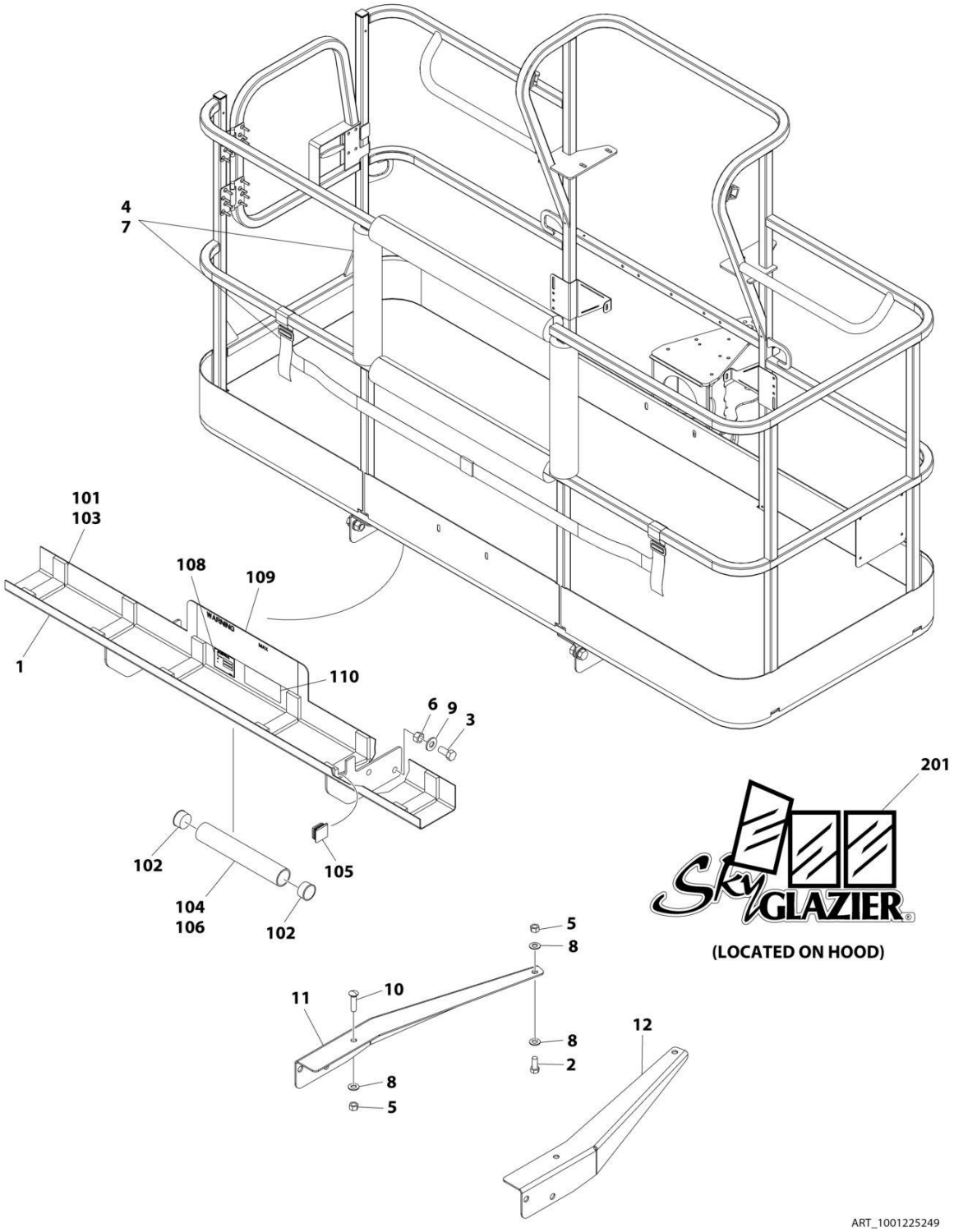

FIGURE 5-32. SKYGLAZIER INSTALLATION (GERMAN SPECS)

ITEM	PART NUMBER	QTY	DESCRIPTION	REV
	1001225249	Ref	SKYGLAZIER INSTALLATION	A
1	0272950	1	Tray Assembly (See Items 101-110 for Breakdown)	
2	0642012	2	Bolt 5/8 x 1-1/2	
3	0642212	4	Bolt 3/4 x 1-1/2	
4	2902212	1	Bumpers and Strap Kit	
4	0940102	1	Bumper Only	
4	4240149	1	Strap Only	
5	3312005	4	Nut 5/8	
6	3312205	4	Nut 3/4	
7	4420014	AR	Tape	
8	4712000	6	Washer 5/8	
9	4712200	8	Washer 3/4	
10	8310129	2	Bolt 5/8 x 2-1/2	
11	1001099366	1	Support	
12	1001099367	1	Support	
	0272950	Ref	TRAY ASSEMBLY	E
101	0100081	AR	Adhesive	
102	1120555	2	Cap, Tube	
103	3340956	1	Pad Kit	
104	3460334	1	Tube	
105	3520071	2	Plug	
106	4420066	AR	Tape, Double Sided	
108	See Note	NSS	Nameplate - Serial Number (Note: Not Available for Purchase)	
109	1001163298	2	Decal - Glazier Capacity	
110	1701509	1	Decal - Manual	
	0272418	Ref	SKYGLAZIER DECAL INSTALLATION	4
201	1705358	2	Decal - SkyGlazier	

FIGURE 5-33. SKYGLAZIER INSTALLATION (ITALIAN SPECS)

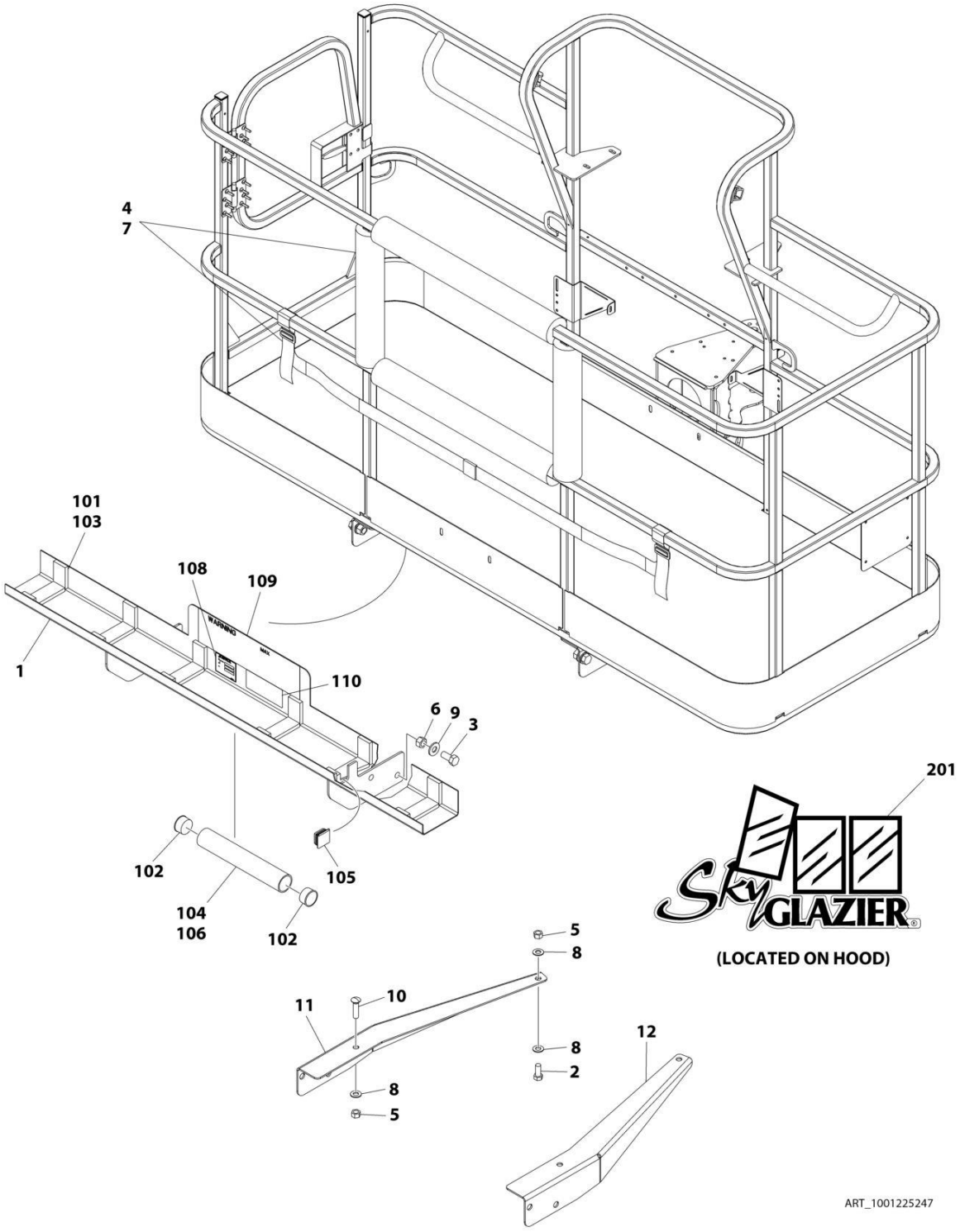

FIGURE 5-33. SKYGLAZIER INSTALLATION (ITALIAN SPECS)

ITEM	PART NUMBER	QTY	DESCRIPTION	REV
	1001225247	Ref	SKYGLAZIER INSTALLATION	A
1	0272952	1	Tray Assembly (See Items 101-110 for Breakdown)	
2	0642012	2	Bolt 5/8 x 1-1/2	
3	0642212	4	Bolt 3/4 x 1-1/2	
4	2902212	1	Bumpers and Strap Kit	
4	0940102	1	Bumper Only	
4	4240149	1	Strap Only	
5	3312005	4	Nut 5/8	
6	3312205	4	Nut 3/4	
7	4420014	AR	Tape	
8	4712000	6	Washer 5/8	
9	4712200	8	Washer 3/4	
10	8310129	2	Bolt 5/8 x 2-1/2	
11	1001099366	1	Support	
12	1001099367	1	Support	
	0272952	Ref	TRAY ASSEMBLY	E
101	0100081	AR	Adhesive	
102	1120555	2	Cap, Tube	
103	3340956	1	Pad Kit	
104	3460334	1	Tube	
105	3520071	2	Plug	
106	4420066	AR	Tape, Double Sided	
108	See Note	NSS	Nameplate - Serial Number (Note: Not Available for Purchase)	
109	1001163287	2	Decal - Glazier Capacity	
110	1701509	1	Decal - Manual	
	0272418	Ref	SKYGLAZIER DECAL INSTALLATION	4
201	1705358	2	Decal - SkyGlazier	

FIGURE 5-34. SKYGLAZIER INSTALLATION (LATIN AMERICAN SPECS)

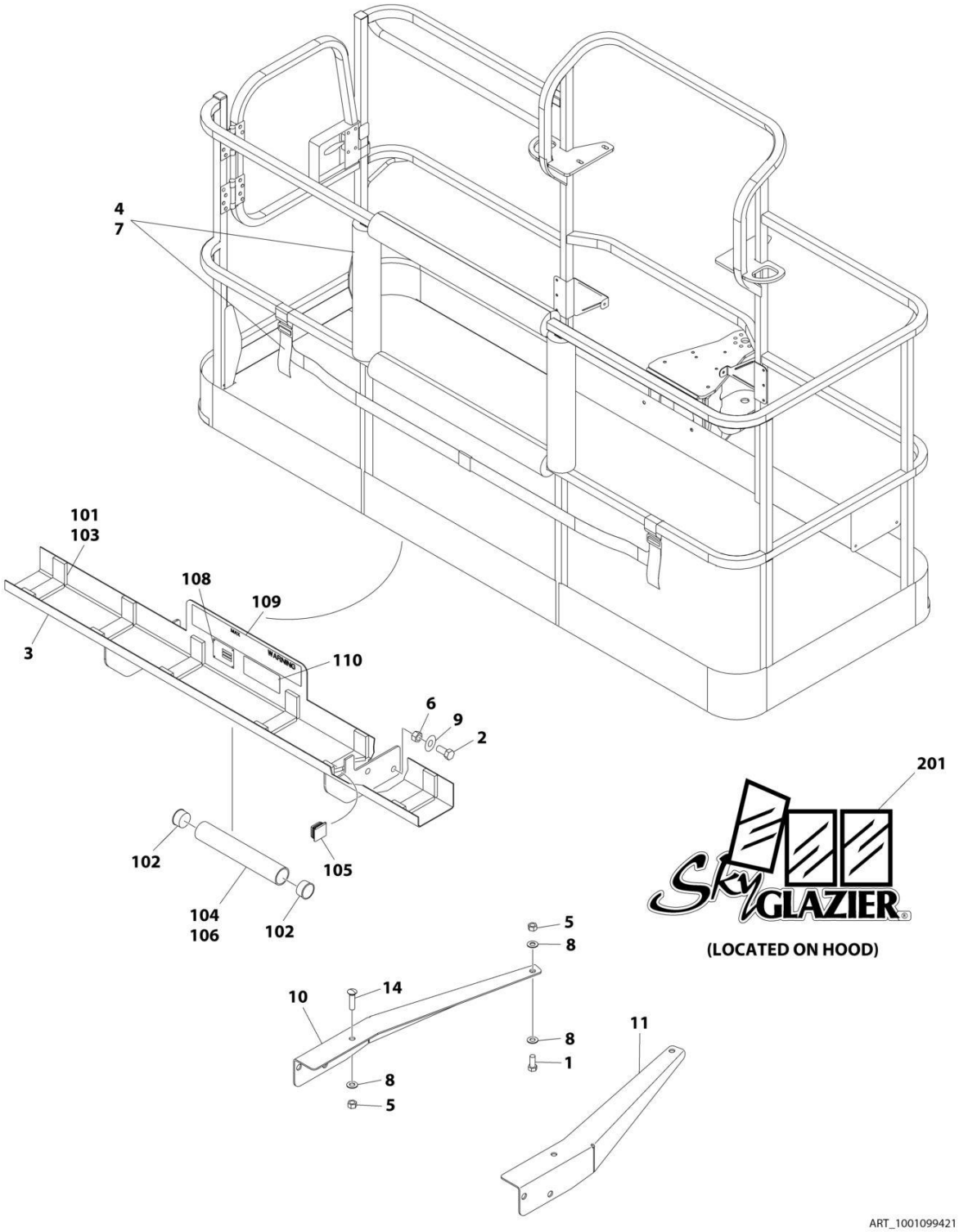

FIGURE 5-34. SKYGLAZIER INSTALLATION (LATIN AMERICAN SPECS)

ITEM	PART NUMBER	QTY	DESCRIPTION	REV
	1001099421	Ref	SKYGLAZIER INSTALLATION	C
1	0642012	2	Bolt 5/8 x 1-1/2	
2	0642212	4	Bolt 3/4 x 1-1/2	
3	0272948	1	Tray Assembly (See Items 101-110 for Breakdown)	
4	2902212	1	Bumpers and Strap Kit	
4	0940102	1	Bumper Only	
4	4240149	1	Strap Only	
5	3312005	4	Nut 5/8	
6	3312205	4	Nut 3/4	
7	4420014	AR	Tape	
8	4712000	6	Washer 5/8	
9	4712200	8	Washer 3/4	
10	1001099366	1	Support	
11	1001099367	1	Support	
14	8310129	2	Bolt 3/4 x 2-1/2	
	0272948	Ref	TRAY ASSEMBLY	F
101	0100081	AR	Adhesive	
102	1120555	2	Cap, Tube	
103	3340956	1	Pad Kit	
104	3460334	1	Tube	
105	3520071	2	Plug	
106	4420066	AR	Tape, Double Sided	
108	See Note	NSS	Nameplate - Serial Number (Note: Not Available for Purchase)	
109	1001163296	2	Decal - Glazier Capacity	
110	1701509	1	Decal - Manual	
	0272418	Ref	SKYGLAZIER DECAL INSTALLATION	4
201	1705358	2	Decal - SkyGlazier	

FIGURE 5-35. SKYGLAZIER INSTALLATION (PORTUGUESE SPECS)

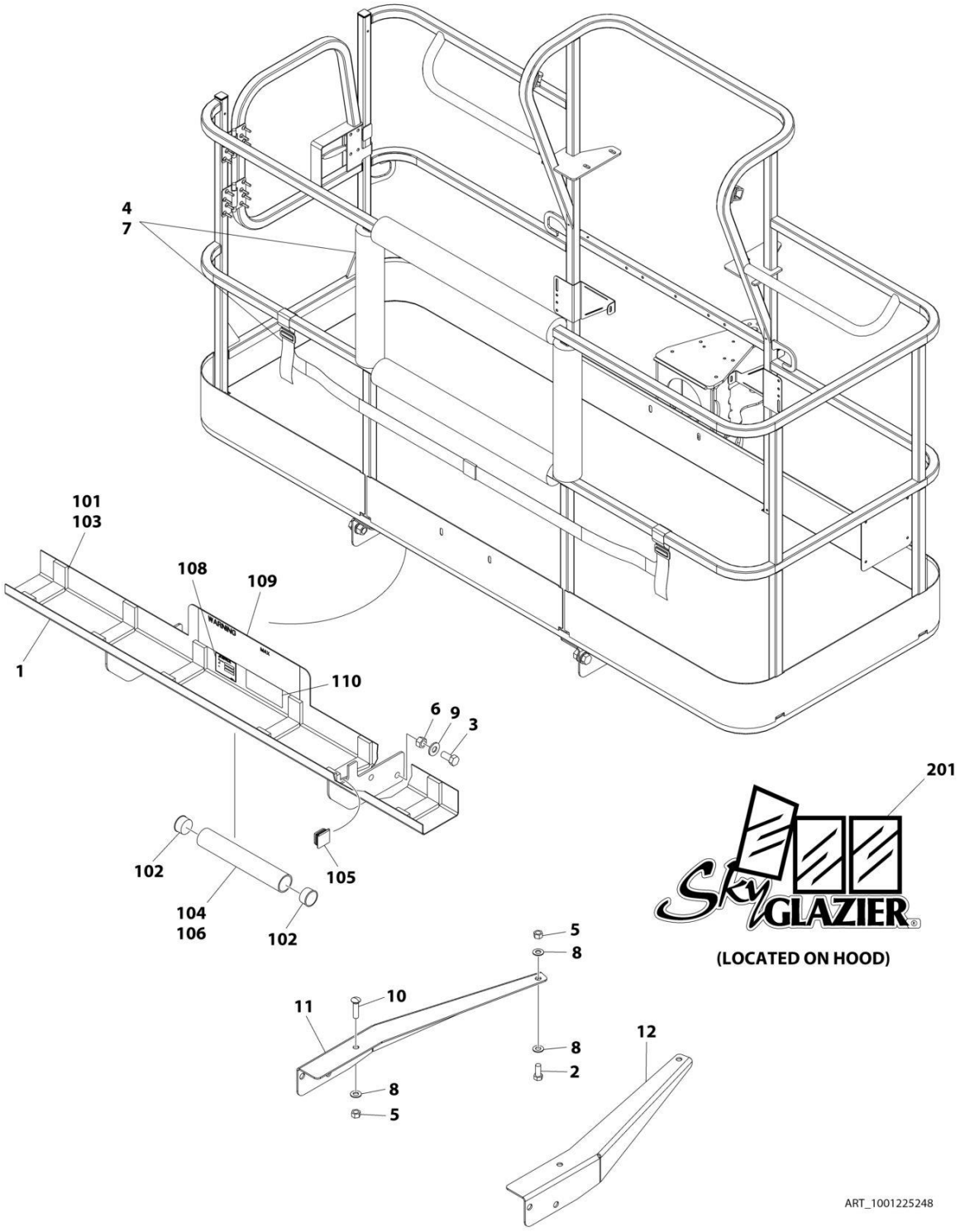

FIGURE 5-35. SKYGLAZIER INSTALLATION (PORTUGUESE SPECS)

ITEM	PART NUMBER	QTY	DESCRIPTION	REV
	1001225248	Ref	SKYGLAZIER INSTALLATION	A
1	0273406	1	Tray Assembly (See Items 101-110 for Breakdown)	
2	0642012	2	Bolt 5/8 x 1-1/2	
3	0642212	4	Bolt 3/4 x 1-1/2	
4	2902212	1	Bumpers and Strap Kit	
4	0940102	1	Bumper Only	
4	4240149	1	Strap Only	
5	3312005	4	Nut 5/8	
6	3312205	4	Nut 3/4	
7	4420014	AR	Tape	
8	4712000	6	Washer 5/8	
9	4712200	8	Washer 3/4	
10	8310129	2	Bolt 5/8 x 2-1/2	
11	1001099366	1	Support	
12	1001099367	1	Support	
	0273406	Ref	TRAY ASSEMBLY	E
101	0100081	AR	Adhesive	
102	1120555	2	Cap, Tube	
103	3340956	1	Pad Kit	
104	3460334	1	Tube	
105	3520071	2	Plug	
106	4420066	AR	Tape, Double Sided	
108	See Note	NSS	Nameplate - Serial Number (Note: Not Available for Purchase)	
109	1001163289	2	Decal - Glazier Capacity	
110	1701509	1	Decal - Manual	
	0272418	Ref	SKYGLAZIER DECAL INSTALLATION	4
201	1705358	2	Decal - SkyGlazier	

FIGURE 5-36. SKYGLAZIER INSTALLATION (SPANISH SPECS)

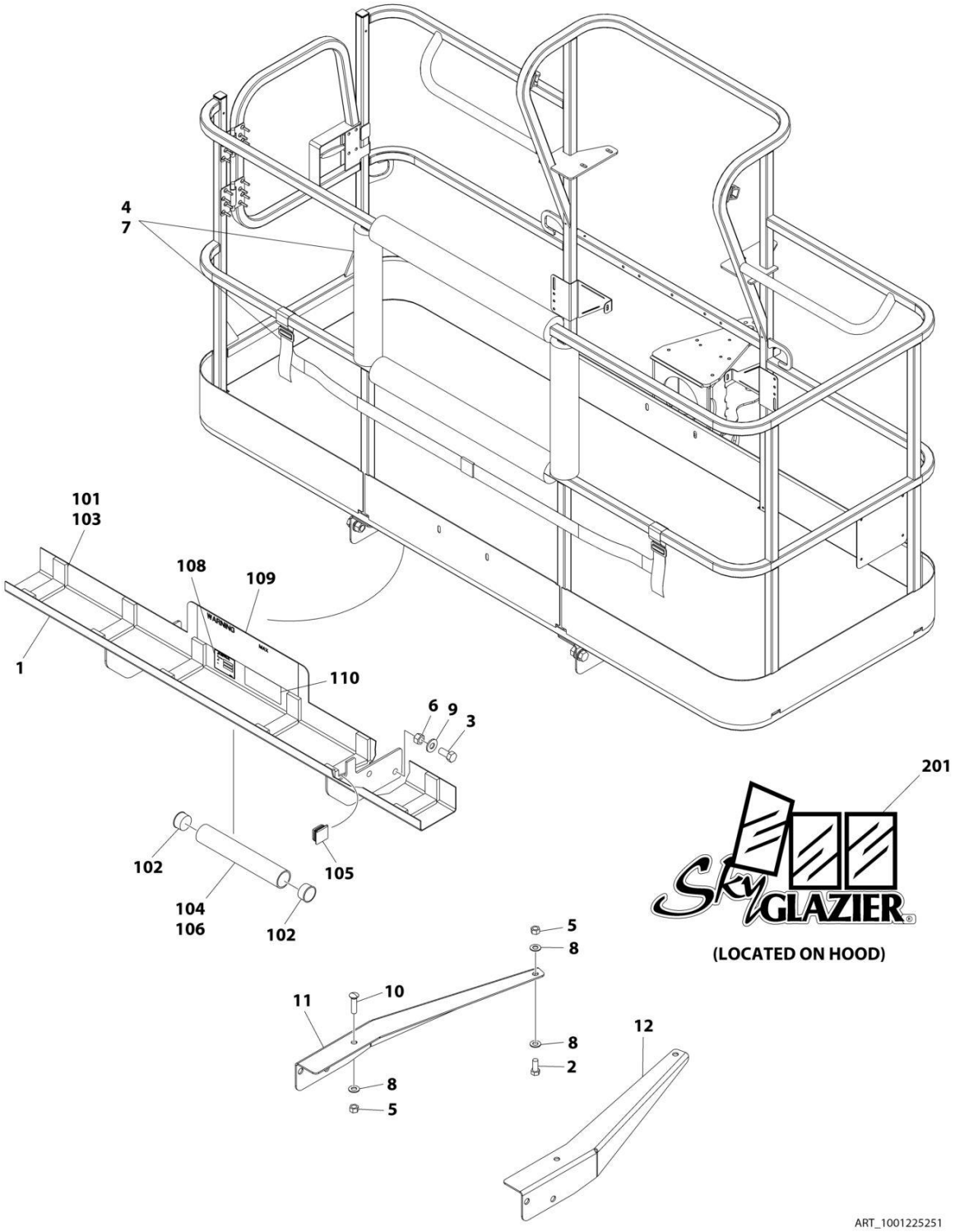

FIGURE 5-36. SKYGLAZIER INSTALLATION (SPANISH SPECS)

ITEM	PART NUMBER	QTY	DESCRIPTION	REV
	1001225251	Ref	SKYGLAZIER INSTALLATION	A
1	0273405	1	Tray Assembly (See Items 101-110 for Breakdown)	
2	0642012	2	Bolt 5/8 x 1-1/2	
3	0642212	4	Bolt 3/4 x 1-1/2	
4	2902212	1	Bumpers and Strap Kit	
4	0940102	1	Bumper Only	
4	4240149	1	Strap Only	
5	3312005	4	Nut 5/8	
6	3312205	4	Nut 3/4	
7	4420014	AR	Tape	
8	4712000	6	Washer 5/8	
9	4712200	8	Washer 3/4	
10	8310129	2	Bolt 5/8 x 2-1/2	
11	1001099366	1	Support	
12	1001099367	1	Support	
	0273405	Ref	TRAY ASSEMBLY	E
101	0100081	AR	Adhesive	
102	1120555	2	Cap, Tube	
103	3340956	1	Pad Kit	
104	3460334	1	Tube	
105	3520071	2	Plug	
106	4420066	AR	Tape, Double Sided	
108	See Note	NSS	Nameplate - Serial Number (Note: Not Available for Purchase)	
109	1001163288	2	Decal - Glazier Capacity	
110	1701509	1	Decal - Manual	
	0272418	Ref	SKYGLAZIER DECAL INSTALLATION	4
201	1705358	2	Decal - SkyGlazier	

FIGURE 5-37. SKYGLAZIER INSTALLATION (SWEDISH SPECS)

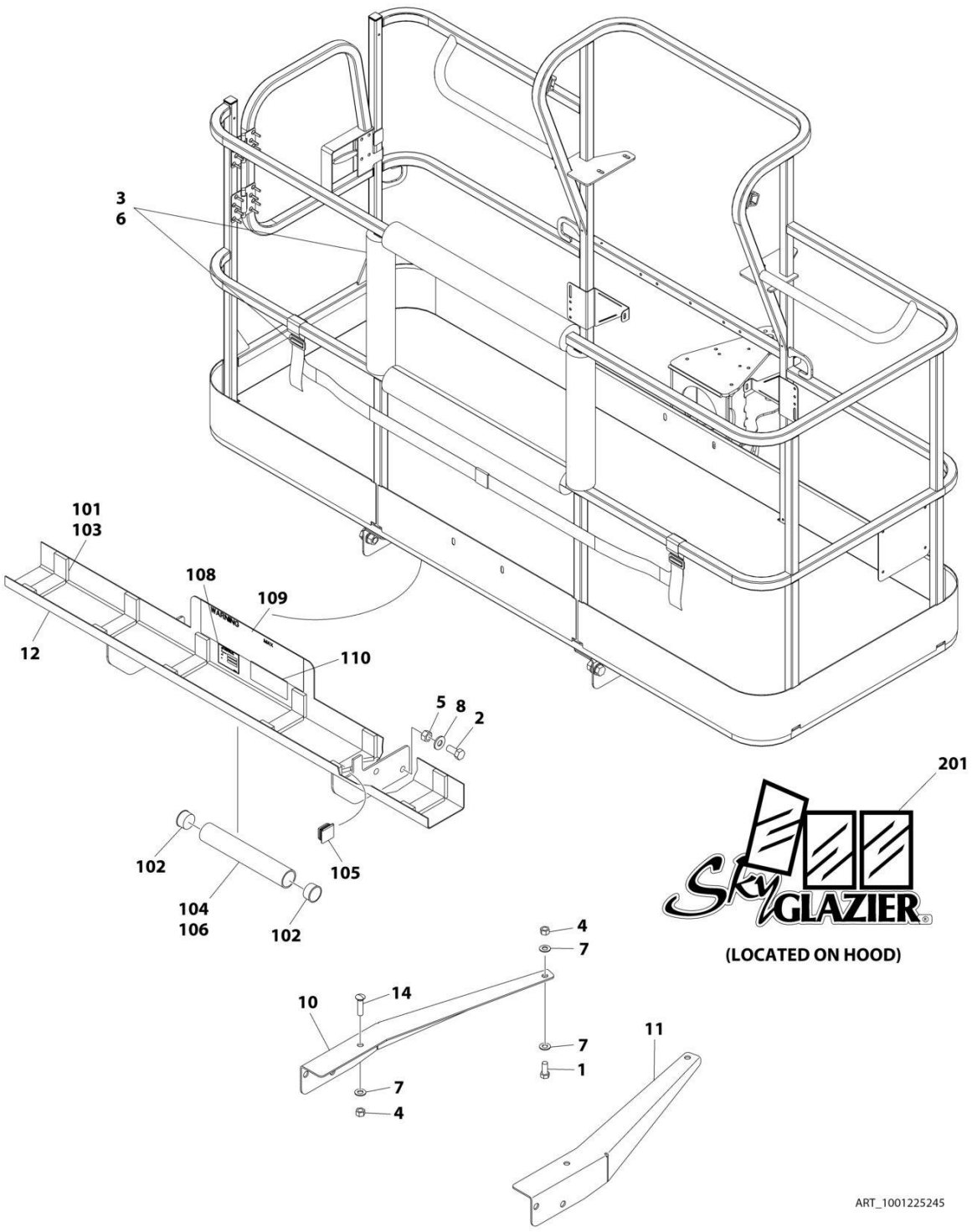

FIGURE 5-37. SKYGLAZIER INSTALLATION (SWEDISH SPECS)

ITEM	PART NUMBER	QTY	DESCRIPTION	REV
	1001225245	Ref	SKYGLAZIER INSTALLATION	B
1	0642012	2	Bolt 5/8 x 1-1/2	
2	0642212	4	Bolt 3/4 x 1-1/2	
3	2902212	1	Bumpers and Strap Kit	
3	0940102	1	Bumper Only	
3	4240149	1	Strap Only	
4	3312005	4	Nut 5/8	
5	3312205	4	Nut 3/4	
6	4420014	AR	Tape	
7	4712000	6	Washer 5/8	
8	4712200	8	Washer 3/4	
9	8310129	2	Bolt 5/8 x 2-1/2	
10	1001099366	1	Support	
11	1001099367	1	Support	
12	1001115603	1	Tray Assembly (See Items 101-110 for Breakdown)	
	1001115603	Ref	TRAY ASSEMBLY	D
101	0100081	AR	Adhesive	
102	1120555	2	Cap, Tube	
103	3340956	1	Pad Kit	
104	3460334	1	Tube	
105	3520071	2	Plug	
106	4420066	AR	Tape, Double Sided	
108	See Note	NSS	Nameplate - Serial Number (Note: Not Available for Purchase)	
109	1001163292	2	Decal - Glazier Capacity	
110	1701509	1	Decal - Manual	
	0272418	Ref	SKYGLAZIER DECAL INSTALLATION	4
201	1705358	2	Decal - SkyGlazier	

FIGURE 5-38. SKYGLAZIER INSTALLATION (UK SPECS)

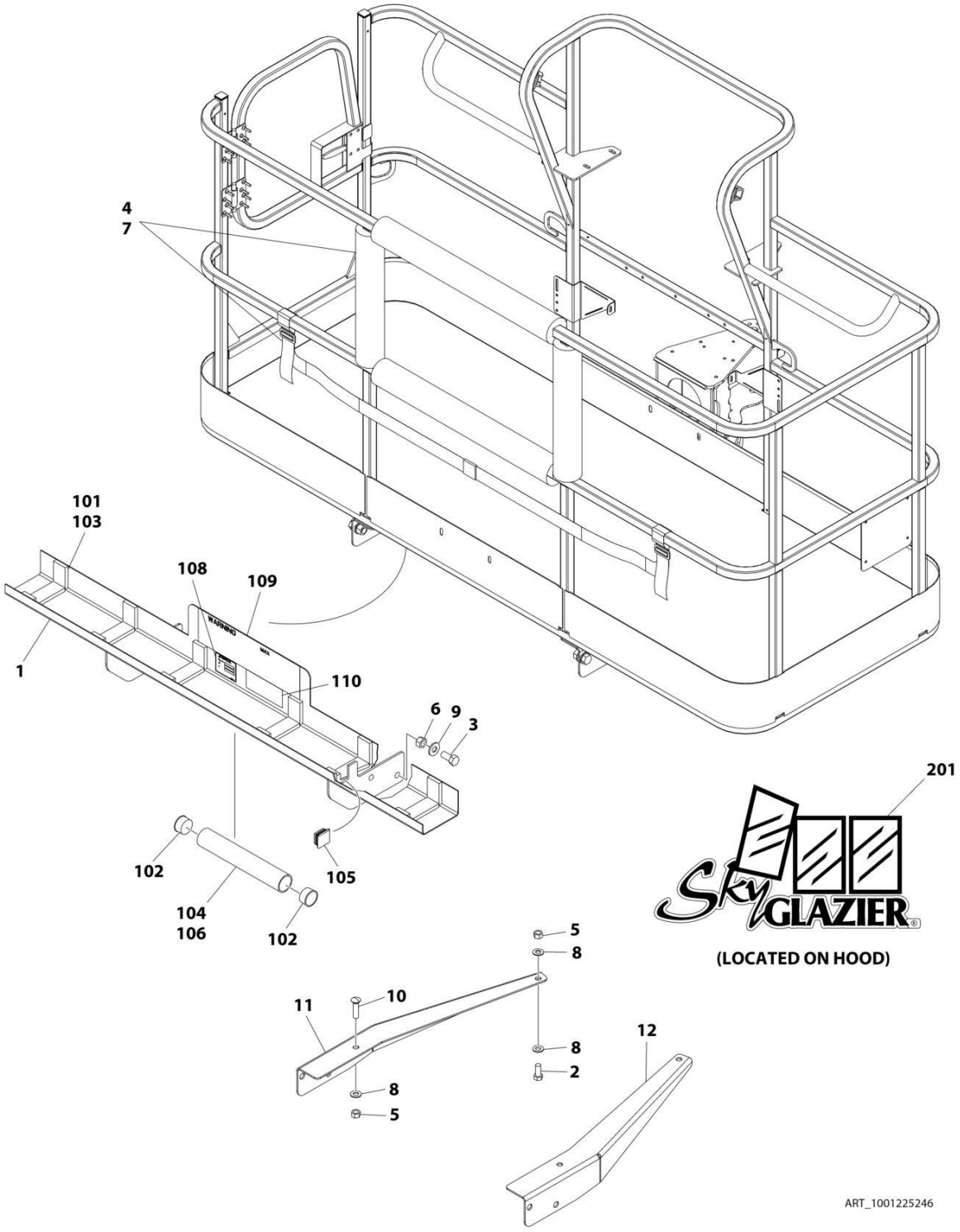

FIGURE 5-38. SKYGLAZIER INSTALLATION (UK SPECS)

ITEM	PART NUMBER	QTY	DESCRIPTION	REV
	1001225246	Ref	SKYGLAZIER INSTALLATION	A
1	0273404	1	Tray Assembly (See Items 101-110 for Breakdown)	
2	0642012	2	Bolt 5/8 x 1-1/2	
3	0642212	4	Bolt 3/4 x 1-1/2	
4	2902212	1	Bumpers and Strap Kit	
4	0940102	1	Bumper Only	
4	4240149	1	Strap Only	
5	3312005	4	Nut 3/4	
6	3312205	4	Nut 3/4	
7	4420014	AR	Tape	
8	4712000	6	Washer 5/8	
9	4712200	8	Washer 3/4	
10	8310129	2	Bolt 5/8 x 2-1/2	
11	1001099366	1	Support	
12	1001099367	1	Support	
	0273404	Ref	TRAY ASSEMBLY	F
101	0100081	AR	Adhesive	
102	1120555	2	Cap, Tube	
103	3340956	1	Pad Kit	
104	3460334	1	Tube	
105	3520071	2	Plug	
106	4420066	AR	Tape, Double Sided	
108	See Note	NSS	Nameplate - Serial Number (Note: Not Available for Purchase)	
109	1001163295	2	Decal - Glazier Capacity	
110	1701509	1	Decal - Manual	
	0272418	Ref	SKYGLAZIER DECAL INSTALLATION	4
201	1705358	2	Decal - SkyGlazier	

FIGURE 5-39. SKYGUARD BAR INSTALLATION

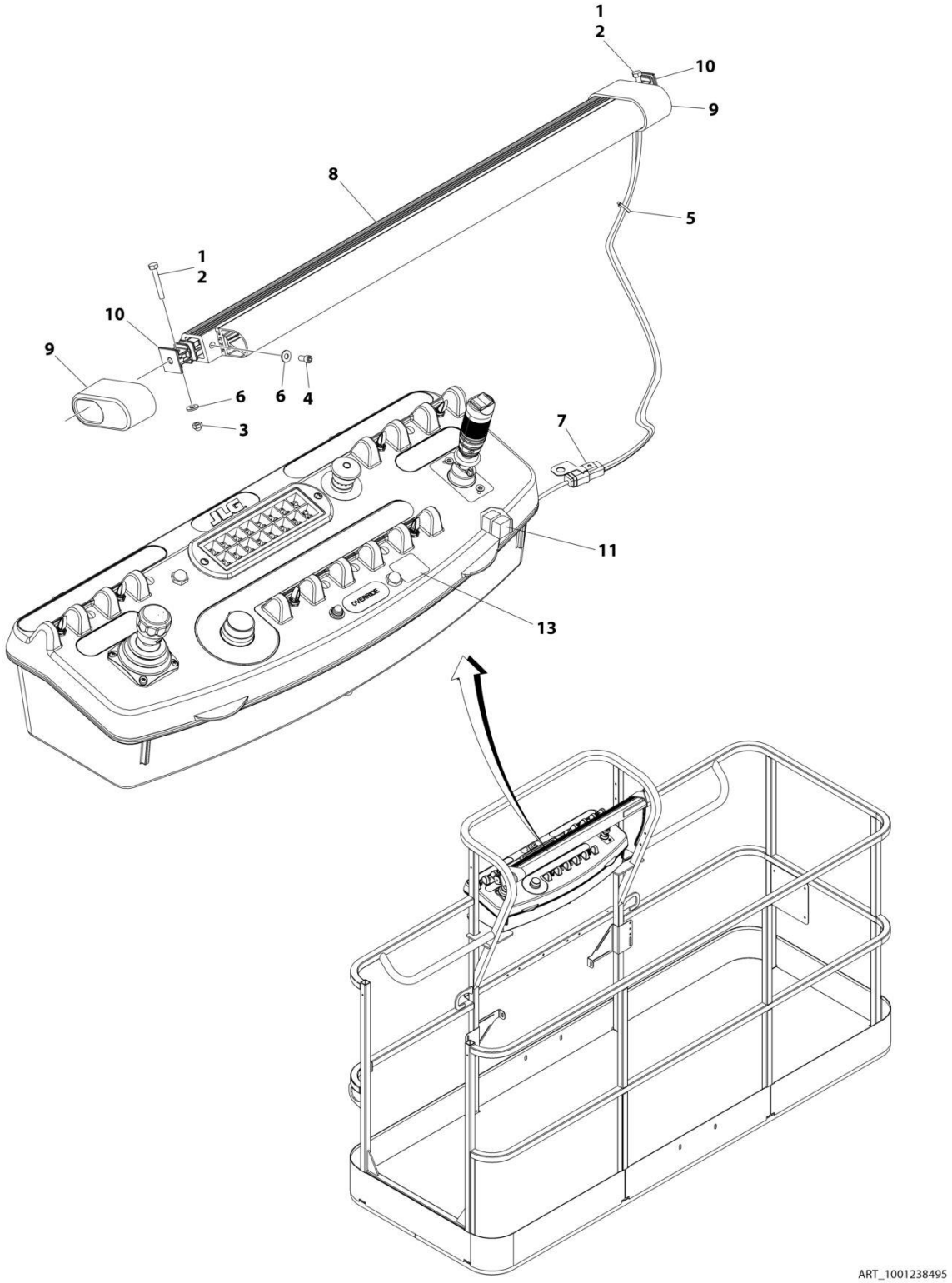

FIGURE 5-39. SKYGUARD BAR INSTALLATION

ITEM	PART NUMBER	QTY	DESCRIPTION	REV
	1001238495	Ref	SKYGUARD BAR INSTALLATION	A
1	0100011	AR	Compound, Locking	
2	0641414	2	Bolt 1/4 x 1-3/4	
3	3300430	2	Nut 1/4	
4	3931408	2	Capscrew 1/4 x 1/2	
5	4240033	8	Tie-Strap	
6	4711400	6	Washer 1/4	
7	1001120328	1	Mount	
8	1001137673	1	SkyGuard Switch Assembly	
9	1001186517	2	Cover, Platform Sensor	
10	1001209664	2	Support, Block	
11	1001186431	2	Relay	
12	1001225580	1	Interface Harness Assembly (Not Shown - Located Inside Console Box) (See Separate Breakdown in ELECTRICAL Section)	
13	1001144433	1	Decal - No Weight SkyGuard	

FIGURE 5-40. SKYLINE INSTALLATION

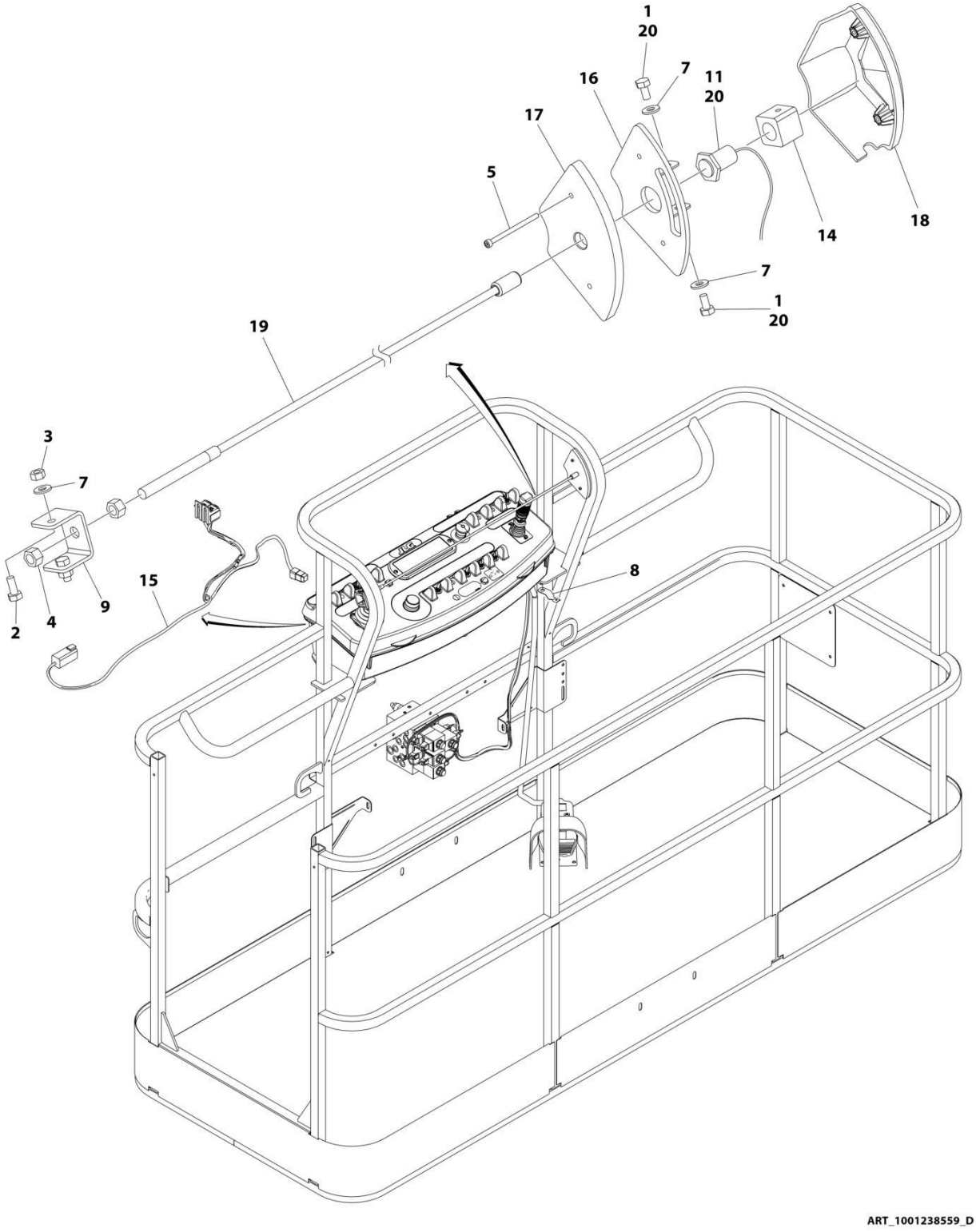

FIGURE 5-40. SKYLINE INSTALLATION

ITEM	PART NUMBER	QTY	DESCRIPTION	REV
	1001238559	Ref	SKYLINE INSTALLATION	D
1	0641404	2	Bolt 1/4 x 1/2	
2	0641405	2	Bolt 1/4 x 5/8	
3	3311405	2	Nut 1/4	
4	3311601	2	Nut 3/8	
5	4031516	2	Capscrew M4 x 60	
6	4240033	AR	Tie-Strap (Not Shown)	
7	4711400	4	Washer 1/4	
8	1001120328	1	Mount	
9	1001232642	1	Bracket	
11	1001232667	1	Sensor, Proximity	
11	1001311034	1	Sensor, Proximity	
14	1001236552	1	Block	
15	1001238418	1	Harness, Skyline (See Separate Breakdown in ELECTRICAL Section)	
16	1001238472	1	Mount	
17	1001254473	1	Housing, LH	
18	1001241965	1	Housing, RH	
19	1001254472	1	Rod	
20	0100011	AR	Compound, Locking	

FIGURE 5-41. SKYWELDER INSTALLATION (50HZ) (ANSI EXPORT, AUSTRALIAN, CHINA AND JAPANESE SPECS)

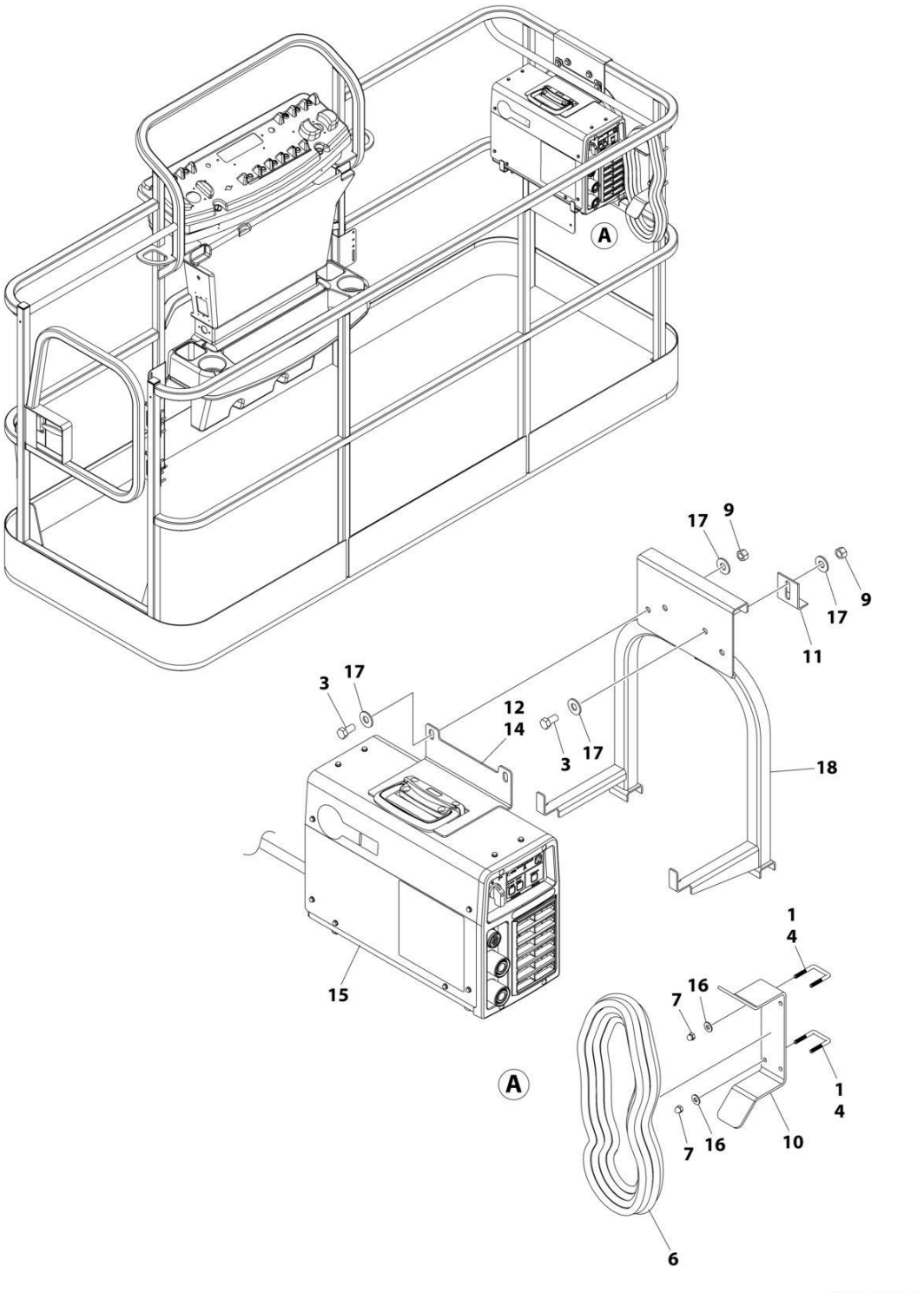

FIGURE 5-41. SKYWELDER INSTALLATION (50HZ) (ANSI EXPORT, AUSTRALIAN, CHINA AND JAPANESE SPECS)

ITEM	PART NUMBER	QTY	DESCRIPTION	REV
	0272521	Ref	SKYWELDER INSTALLATION	H
1	0100011	AR	Compound, Locking	
3	0641606	4	Bolt 3/8 x 3/4	
4	1320302	2	U-Clamp	
6	2902217	1	Weld Leads Kit	
7	3300151	4	Nut 1/4	
9	3311605	4	Nut 3/8	
10	3573400	1	Bracket	
11	3577121	2	Angle	
12	1001269573	1	Plate	
13	4240099	AR	Tie-Strap (Not Shown)	
14	4420037	AR	Tape	
15	1001268820	1	Welder Assembly (See Separate Breakdown in this Section)	
16	4751400	4	Washer 1/4	
17	4751600	8	Washer 3/8	
18	1001269322	1	Support	

FIGURE 5-42. SKYWELDER INSTALLATION (60HZ) (ANSI, ANSI EXPORT, CSA AND JAPANESE SPECS)

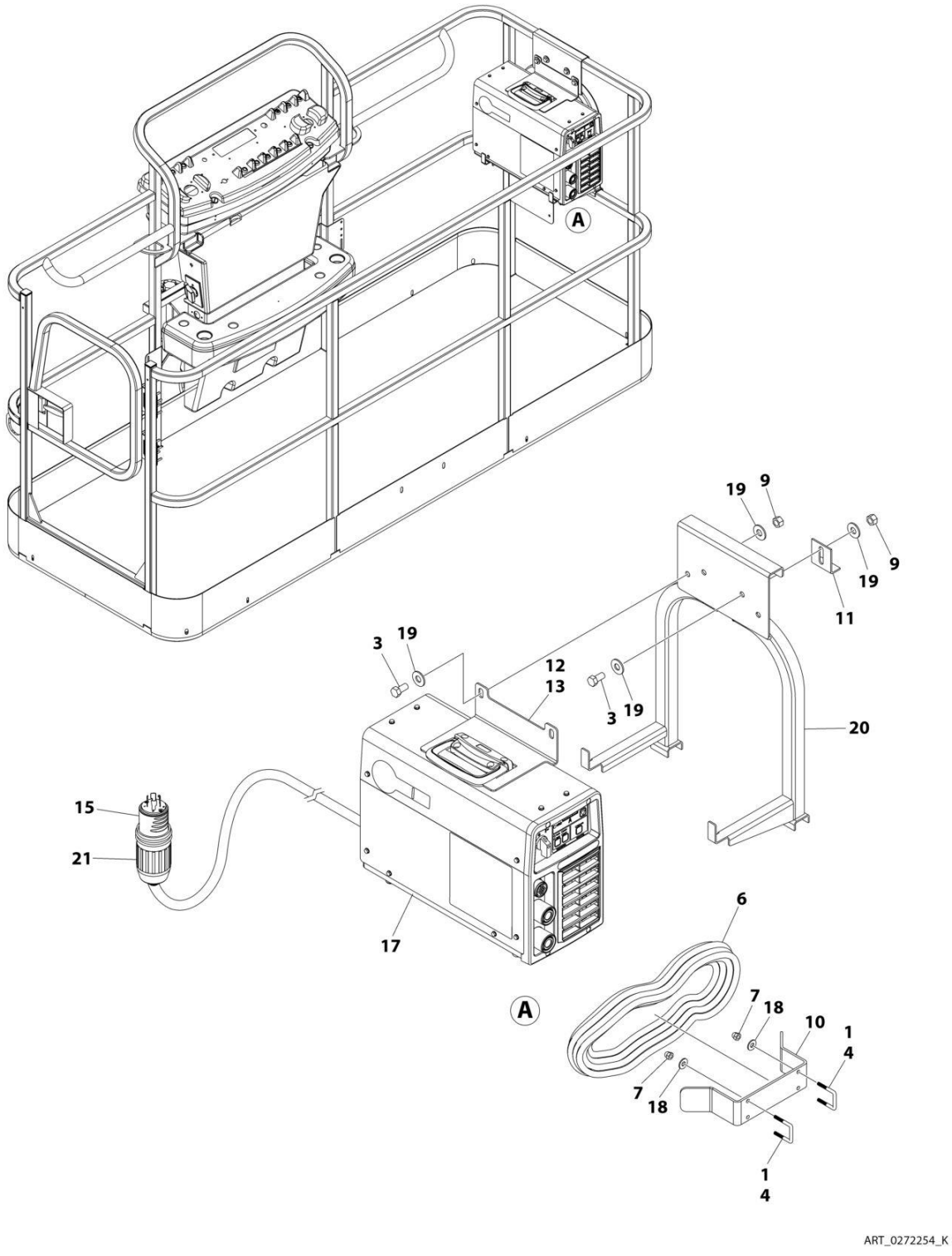

FIGURE 5-42. SKYWELDER INSTALLATION (60HZ) (ANSI, ANSI EXPORT, CSA AND JAPANESE SPECS)

ITEM	PART NUMBER	QTY	DESCRIPTION	REV
	0272254	Ref	SKYWELDER INSTALLATION	K
1	0100011	AR	Compound, Locking	
3	0641606	4	Bolt 3/8 x 3/4	
4	1320302	2	U-Clamp	
6	2902217	1	Weld Leads Kit	
7	3300151	4	Nut 1/4	
9	3311605	4	Nut 3/8	
10	3573400	1	Bracket	
11	3577121	2	Angle	
12	1001269573	1	Plate	
13	4420037	AR	Tape	
14	4240099	AR	Tie-Strap (Not Shown)	
15	4460962	1	Plug, Male Twistlock	
17	1001268820	1	Welder Assembly (See Separate Breakdown in this Section)	
18	4751400	4	Washer 1/4	
19	4751600	8	Washer 3/8	
20	1001269322	1	Support	
21	1671093	1	Cover, Plug	

FIGURE 5-43. SKYWELDER PREP PACKAGE (60HZ) (ANSI, ANSI EXPORT, CSA AND CHINA SPECS)

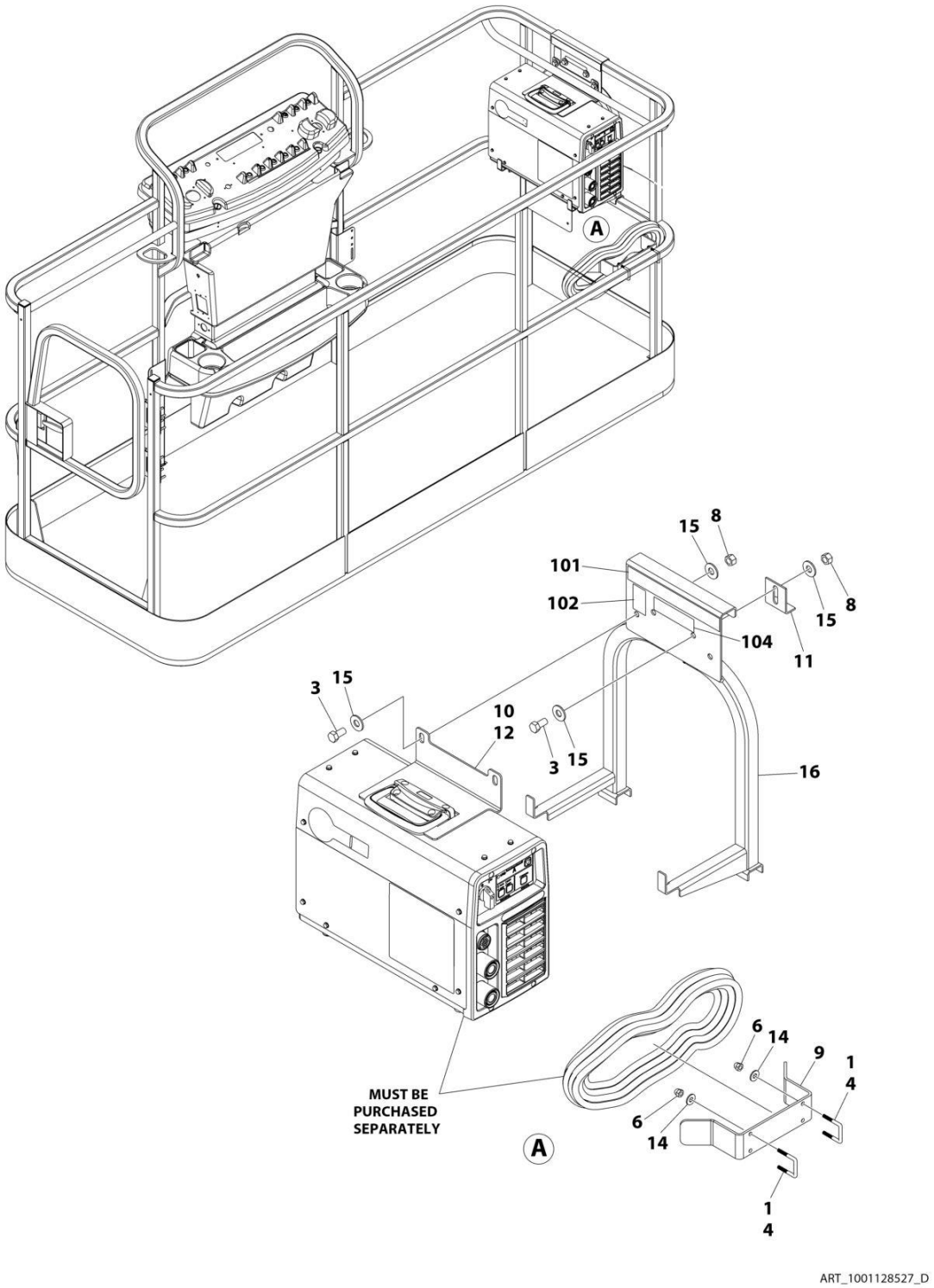

FIGURE 5-43. SKYWELDER PREP PACKAGE (60HZ) (ANSI, ANSI EXPORT, CSA AND CHINA SPECS)

ITEM	PART NUMBER	QTY	DESCRIPTION	REV
	1001128527	Ref	SKYWELDER PREP PACKAGE	D
1	0100011	AR	Compound, Locking	
3	0641606	4	Bolt 3/8 x 3/4	
4	1320302	2	U-Clamp	
6	3300151	4	Nut 1/4	
8	3311605	4	Nut 3/8	
9	3573400	1	Bracket	
10	1001269573	1	Plate	
11	3577121	2	Angle	
12	4420037	AR	Tape	
14	4751400	4	Washer 1/4	
15	4751600	8	Washer 3/8	
16	1001269322	1	Support	
	1001128556	Ref	SKYWELDER DECAL INSTALLATION	D
101	1702868	1	Decal - No Hands	
102	1705305	1	Decal - Weld Lead	
104	1001228988	1	Decal - Weight	

FIGURE 5-44. SKYWELDER/SKYCUTTER COMBO INSTALLATION (60HZ) (ANSI, ANSI EXPORT, CHINA, CSA AND JAPANESE SPECS)

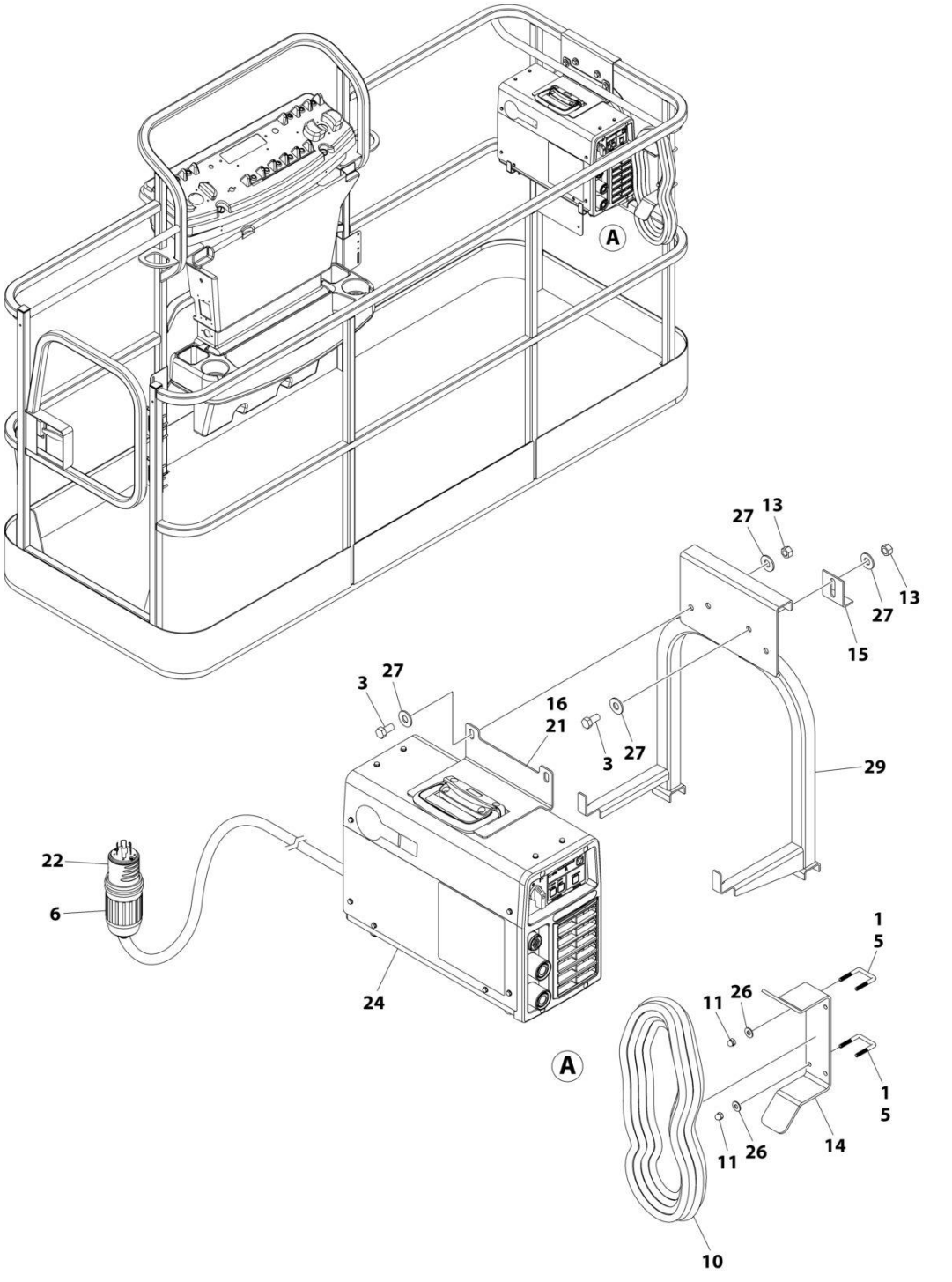

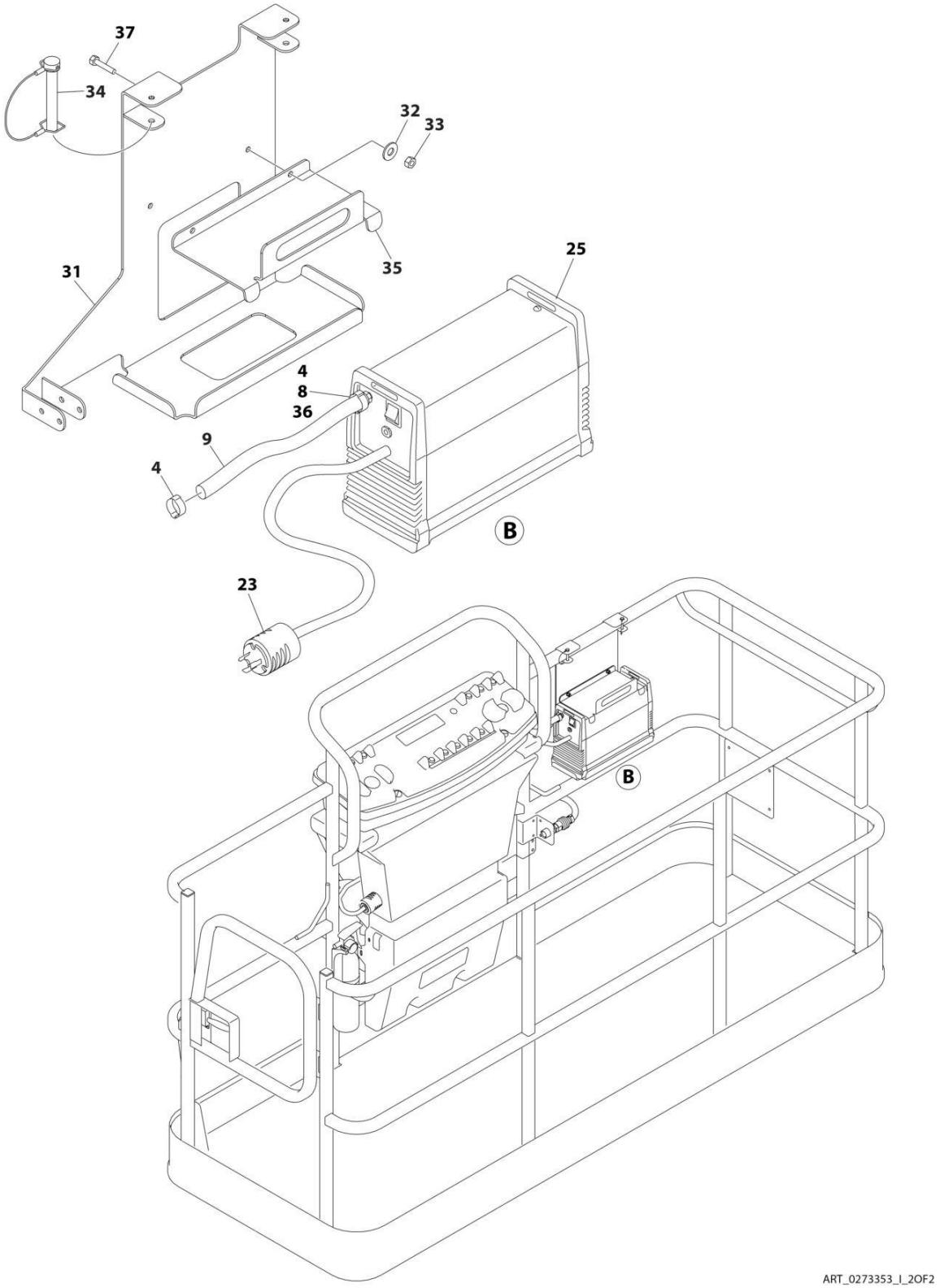
37
34
32
33
35
25
31
4
8
36
9
4
B
23
B
ART_0273353_I_2OF2

FIGURE 5-44. SKYWELDER/SKYCUTTER COMBO INSTALLATION (60HZ) (ANSI, ANSI EXPORT, CHINA, CSA AND JAPANESE SPECS)

ITEM	PART NUMBER	QTY	DESCRIPTION	REV
	0273353	Ref	SKYWELDER/SKYCUTTER COMBO INSTALLATION (60HZ)	I
1	0100011	AR	Compound, Locking	
3	0641606	4	Bolt 3/8 x 3/4	
4	1320177	2	Clamp	
5	1320302	2	Clamp	
6	1671093	1	Cover, Plug	
8	2180832	1	Fitting, Barbed/NPT	
9	2720160	4.5 ft /2 m	Hose	
10	2902217	1	Weld Leads Kit	
11	3300151	4	Nut 1/4	
13	3311605	4	Nut 3/8	
14	3573400	1	Bracket	
15	3577121	2	Angle	
16	1001269573	1	Plate	
20	4240099	AR	Tie-Strap (Not Shown)	
21	4420037	2.4 ft /1 m	Tape	
22	4460962	1	Plug, Twist Lock	
23	4460971	1	Plug, Twist Lock	
24	1001268820	1	Welder Assembly (See Separate Breakdown in this Section)	
25	1001098012	1	Plasma Cutter Assembly (See Separate Breakdown in this Section)	
26	4751400	4	Washer 1/4	
27	4751600	8	Washer 3/8	
29	1001269322	1	Support	
31	1001145405	1	Bracket	
32	4811700	2	Washer M6	
33	3290605	2	Nut M6	
34	3421453	3	Pin	
35	3576799	1	Plate, Hold-Down	
36	0100020	AR	Sealant	
37	4010608	2	Screw M6 x 16	

FIGURE 5-45. SOFT TOUCH SYSTEM INSTALLATION - 6FT/1.8M PLATFORMS - (ALL SPECS)

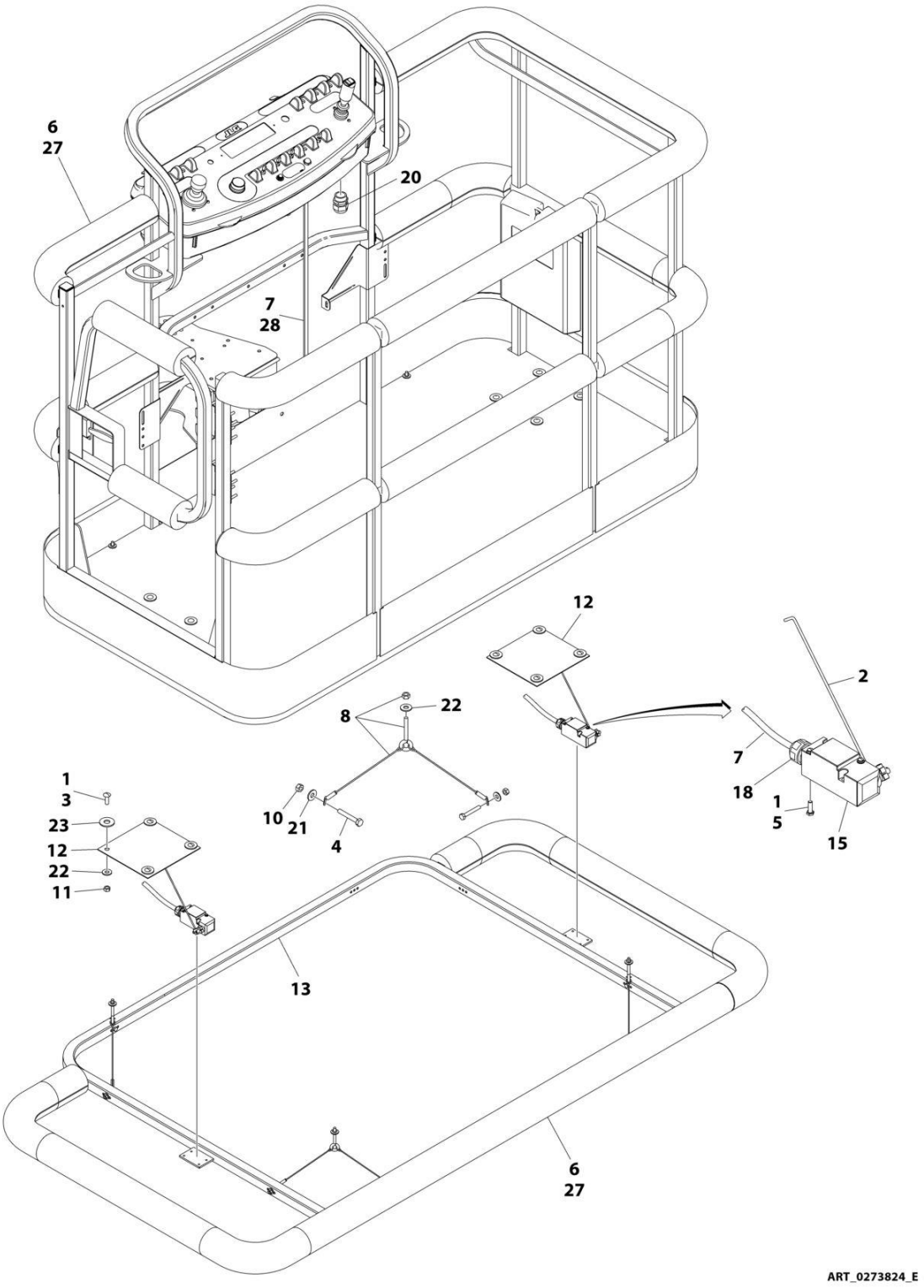

FIGURE 5-45. SOFT TOUCH SYSTEM INSTALLATION - 6FT/1.8M PLATFORMS - (ALL SPECS)

ITEM	PART NUMBER	QTY	DESCRIPTION	REV
	0273824	Ref	SOFT TOUCH SYSTEM INSTALLATION	E
1	0100011	AR	Compound, Locking	
2	0200048	2	Arm, Switch	
3	0630462	8	Bolt	
4	0641414	8	Bolt 1/4 x 1-3/4	
5	0731005	4	Bolt #10 x 5/8	
6	0940134	1	Bumper Kit (Includes Corners and Enough Straight Material for One Platform)	
6	0940092	AR	Bumper (Corner)	
6	0940094	AR	Bumper (12ft Length)	
7	1060341	23 ft/7m	Cable, Soft Touch - 16/2	
8	1060903	4	Wire Rope and Eyebolt Assembly	
10	3311401	8	Nut 1/4	
11	3311501	8	Nut 5/16	
12	3575359	2	Plate, Switch Strike	
13	3641569	1	Rail, Soft Touch	
14	4240099	7	Tie-Strap (Not Shown)	
15	4360057	2	Switch, Limit	
18	4460049	2	Connector, Strain Relief	
19	4460234	7	Tie-Strap (Not Shown)	
20	4460425	1	Connector, Strain Relief	
21	4751400	8	Washer 1/4	
22	4751500	12	Washer 5/16	
23	4751800	8	Washer 1/2	
27	1001197017	AR	Tie-Strap	
28	4460226	4	Socket	

FIGURE 5-46. SOFT TOUCH SYSTEM INSTALLATION - 8FT/2.4M PLATFORMS (ALL SPECS) (1350SJP)

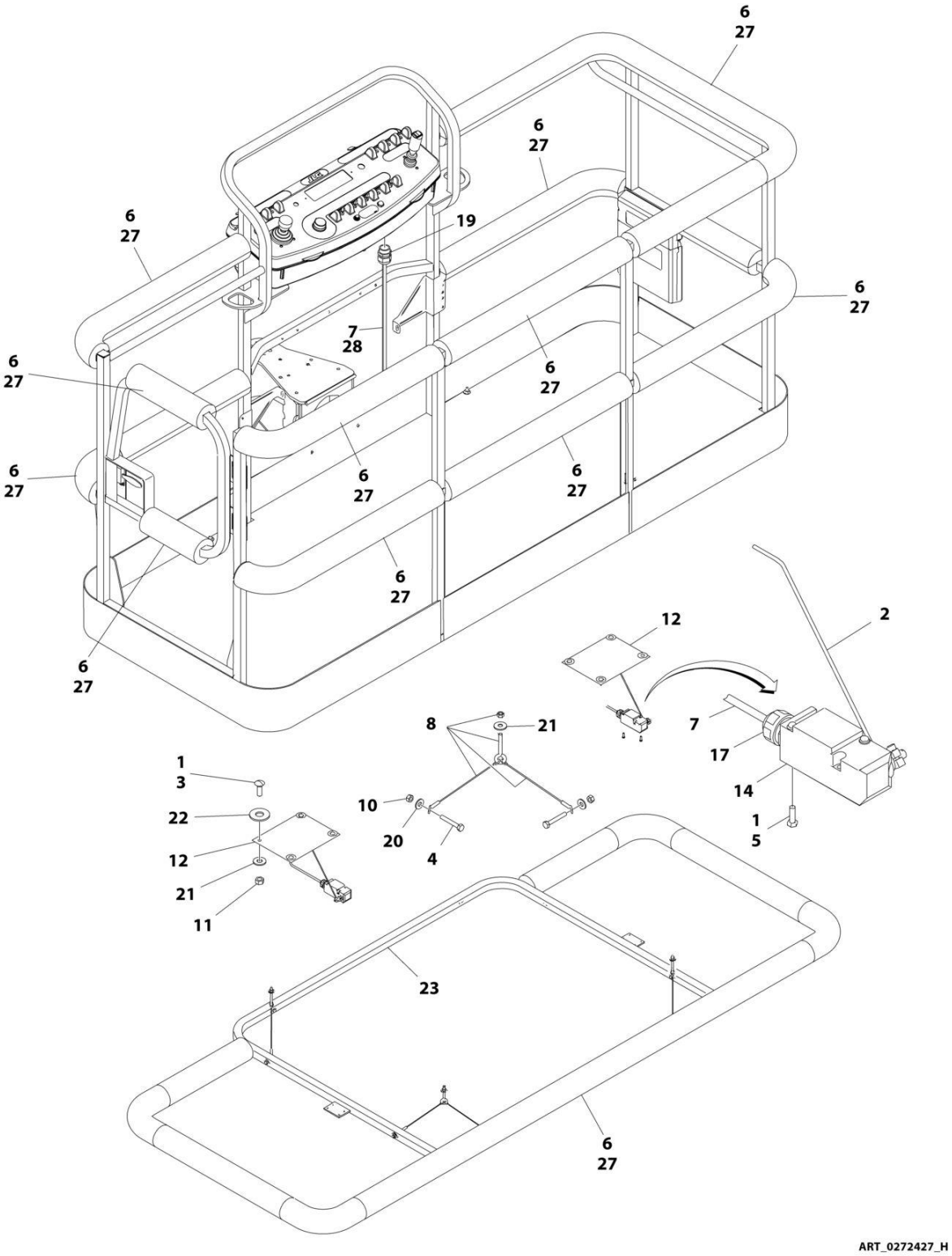

FIGURE 5-46. SOFT TOUCH SYSTEM INSTALLATION - 8FT/2.4M PLATFORMS (ALL SPECS) (1350SJP)

ITEM	PART NUMBER	QTY	DESCRIPTION	REV
	0272427	Ref	SOFT TOUCH INSTALLATION - 36IN X 8FT (91.5CM X 2.44M) PLATFORM	H
1	0100011	AR	Compound, Locking	
2	0200048	2	Arm, Switch	
3	0630462	8	Bolt	
4	0641414	8	Bolt 1/4 x 1-3/4	
5	0721005	4	Bolt #10 x 5/8	
6	0940103	1	Bumper Kit (Includes Corners and Enough Straight Material for One Platform)	
6	0940092	12	Bumper (Corner)	
6	0940094	AR	Bumper (12ft Length)	
7	1060341	23 ft/7m	Cable, Soft Touch - 16/2	
8	1060903	4	Wire Rope and Eyebolt Assembly	
10	3311401	8	Nut 1/4	
11	3311501	8	Nut 5/16	
12	3574091	2	Plate, Switch Strike	
13	4240099	7	Tie-Strap (Not Shown)	
14	4360057	2	Switch, Limit	
17	4460049	2	Connector, Strain Relief	
18	4460234	7	Tie-Strap (Not Shown)	
19	4460425	1	Connector, Strain Relief	
20	4751400	8	Washer 1/4	
21	4751500	12	Washer 5/16	
22	4751800	8	Washer 1/2	
23	4846673	1	Rail, Soft Touch	
27	1001197017	AR	Tie-Strap	
28	4460226	1	Socket	

FIGURE 5-47. SOFT TOUCH SYSTEM INSTALLATION - 8FT/2.4M PLATFORMS (ANSI SPECS WITH SN STARTING WITH 03)) (1350SJP)

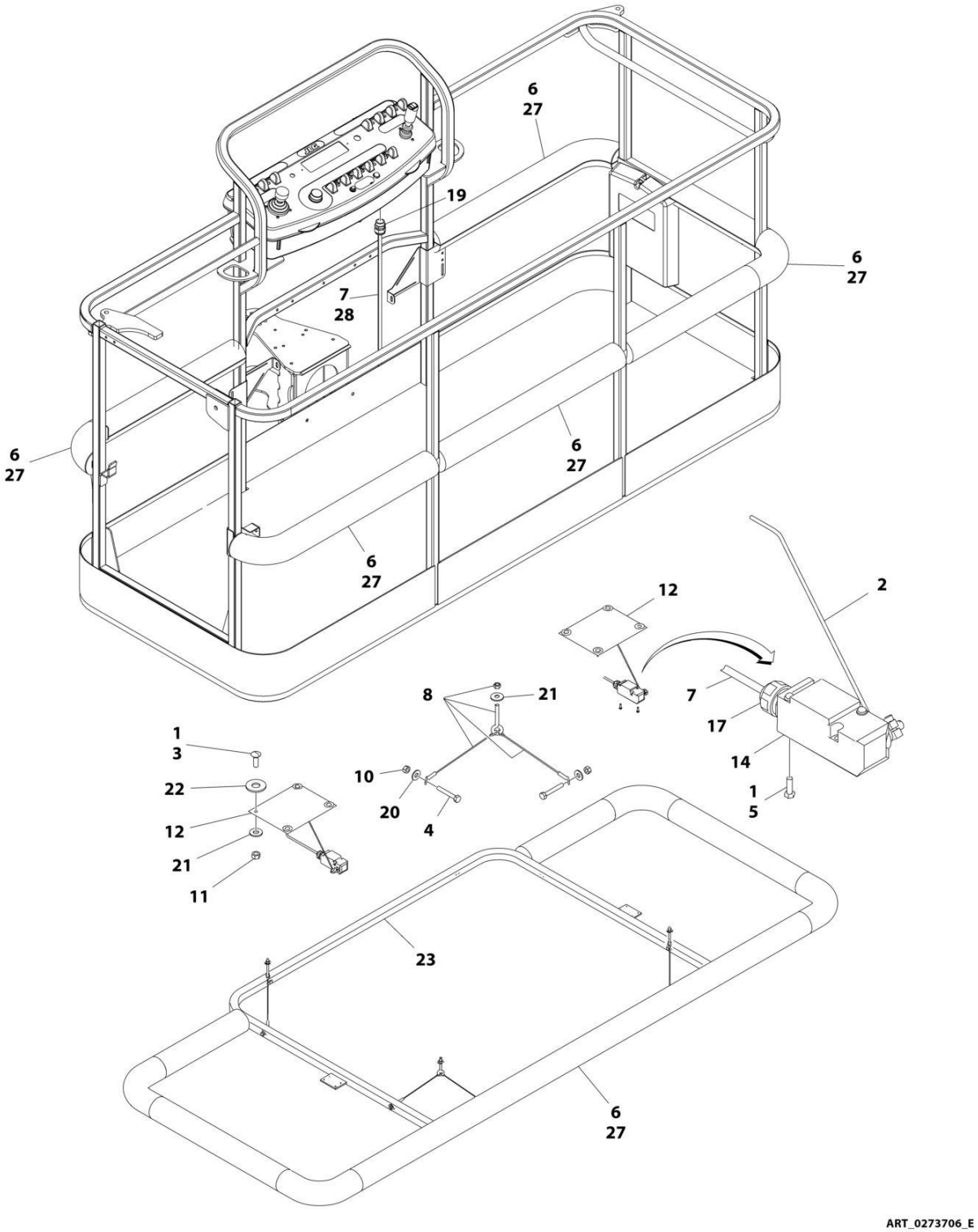

FIGURE 5-47. SOFT TOUCH SYSTEM INSTALLATION - 8FT/2.4M PLATFORMS (ANSI SPECS WITH SN STARTING WITH 03)) (1350SJP)

ITEM	PART NUMBER	QTY	DESCRIPTION	REV
	0273706	Ref	SOFT TOUCH INSTALLATION	E
1	0100011	AR	Compound, Locking	
2	0200048	2	Arm, Switch	
3	0630462	8	Bolt	
4	0641414	8	Bolt 1/4 x 1-3/4	
5	0721005	4	Bolt #10 x 5/8	
6	0940133	1	Bumper Kit (Includes Corners and Enough Straight Material for One Platform)	
6	0940092	8	Bumper (Corner)	
6	0940094	AR	Bumper (12ft Length)	
7	1060341	23 ft/7m	Cable, Soft Touch - 16/2	
8	1060903	4	Wire Rope and Eyebolt Assembly	
10	3311401	8	Nut 1/4	
11	3311501	8	Nut 5/16	
12	3574091	2	Plate, Switch Strike	
13	4240099	7	Tie-Strap (Not Shown)	
14	4360057	2	Switch, Limit	
17	4460049	2	Connector, Strain Relief	
18	4460234	7	Tie-Strap (Not Shown)	
19	4460425	1	Connector, Strain Relief	
20	4751400	8	Washer 1/4	
21	4751500	12	Washer 5/16	
22	4751800	8	Washer 1/2	
23	4846673	1	Rail, Soft Touch	
27	1001197017	AR	Tie-Strap	
28	4460226	4	Socket	

FIGURE 5-48. TRAY ASSEMBLY

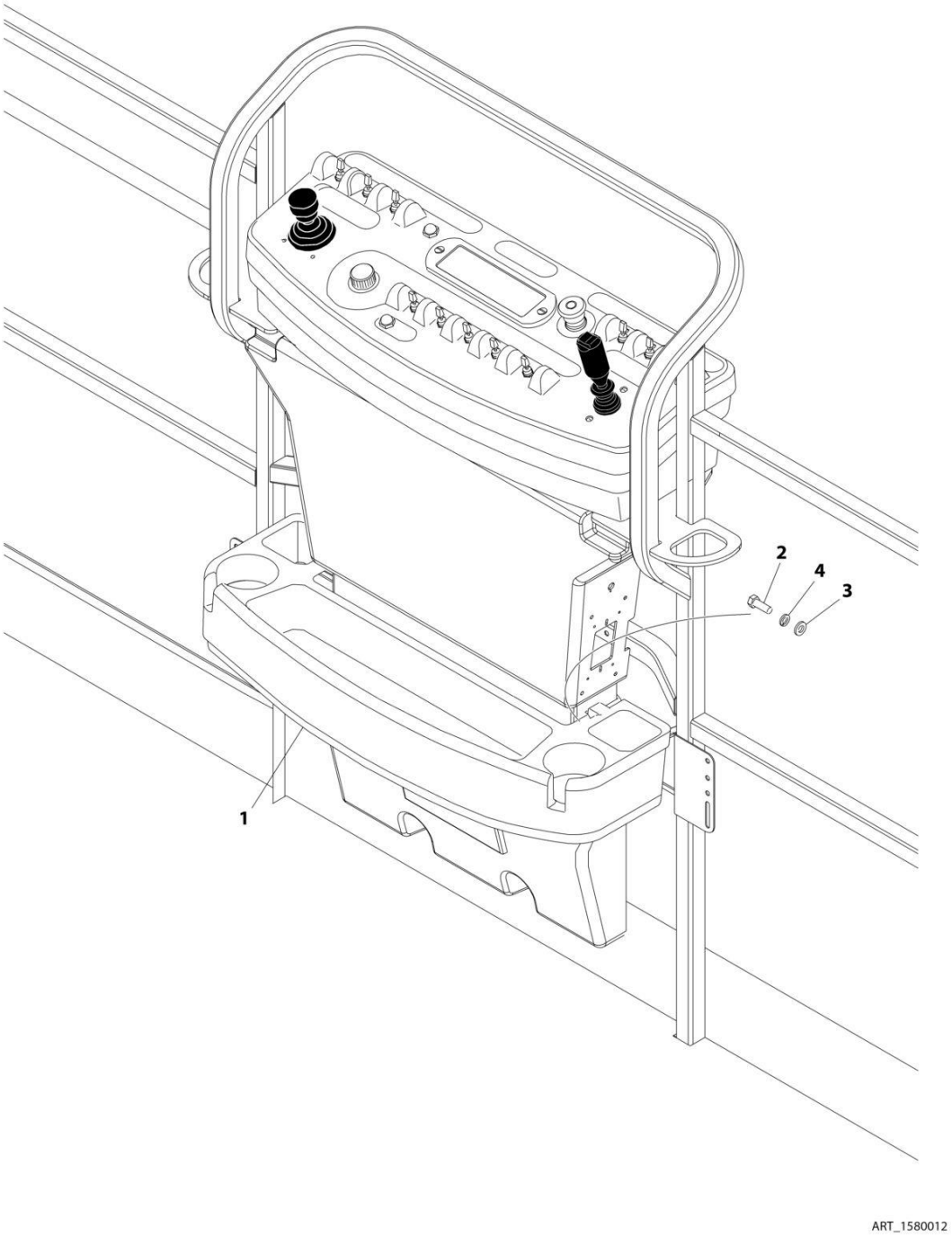

FIGURE 5-48. TRAY ASSEMBLY

ITEM	PART NUMBER	QTY	DESCRIPTION	REV
	1580012	Ref	TRAY ASSEMBLY	C
1	See Note	NSS	Tray, Storage (Center) (Note: Purchase p/n 1580012)	
2	0641406	2	Bolt 1/4 x 3/4	
3	4751400	2	Washer 1/4	
4	4761400	2	Washer 1/4	

FIGURE 5-49. USB CHARGER INSTALLATION

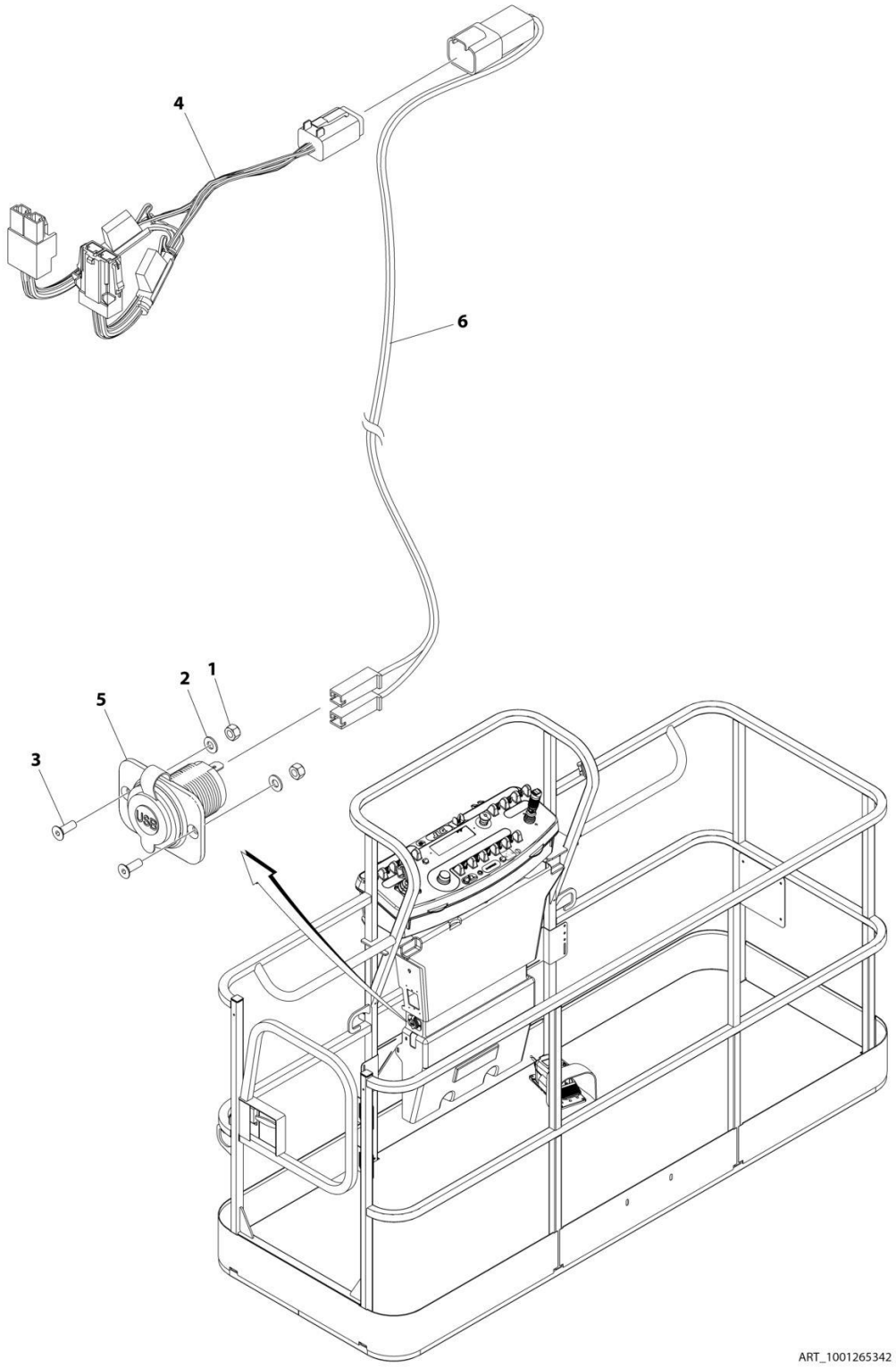

FIGURE 5-49. USB CHARGER INSTALLATION

ITEM	PART NUMBER	QTY	DESCRIPTION	REV
	1001265342	Ref	USB CHARGER INSTALLATION	A
1	3290405	2	Nut M4	
2	4811400	2	Washer M4	
3	1001097244	2	Screw M4 x 12	
4	1001120484	1	Harness, Work Lights	
4	4460879	1	Plug, Male - 2 Position	
4	4460887	2	Terminal	
4	2400060	2	Fuseholder Includes Cover	
4	8229249	2	Fuse, 3 Amp	
4	4460884	1	Connector - 4 Position	
4	4460465	4	Socket, Female	
4	1001120471	1	Connector - 2 Position	
4	1001120477	2	Terminal	
5	1001210636	1	Receptacle, USB	
6	1001265163	1	Harness, USB	A
6	4460260	2	Cover, Terminal	
6	4460259	2	Terminal	
6	4460932	1	Receptacle, Bussbar - 4 Position	
6	4460464	2	Pin, Male	
6	4460466	2	Plug, Terminal	

FIGURE 5-50. WELDER ASSEMBLY

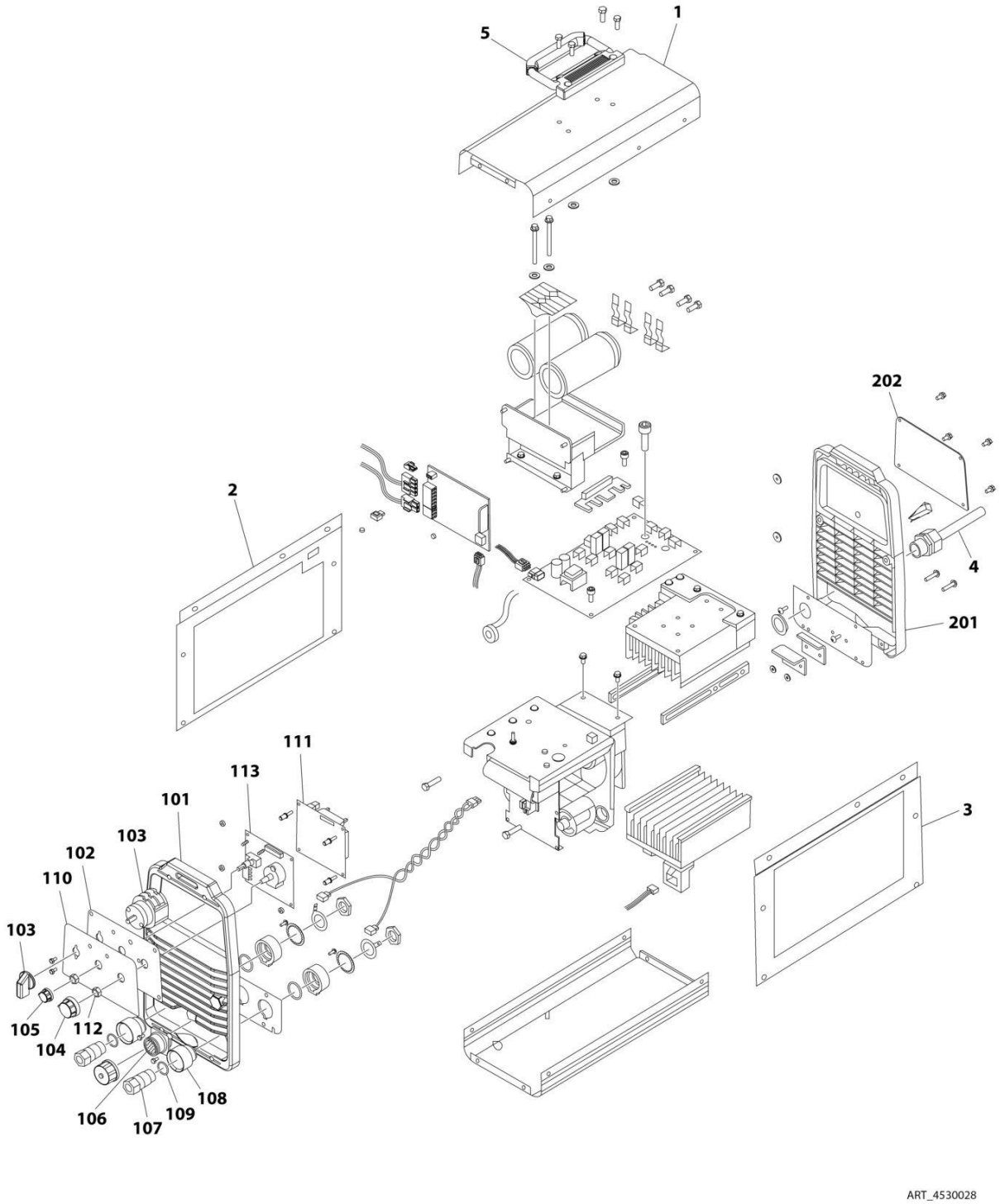

FIGURE 5-50. WELDER ASSEMBLY

ITEM	PART NUMBER	QTY	DESCRIPTION	REV
	4530028	Ref	WELDER ASSEMBLY	B
		Ref	Note: For Other Components, contact your Miller Welder Dealer.	
1	7027773	1	Cover, Top	
1	7027774	1	Decal - Static Precautionary Warning	
2	See Note	NSS	Panel, LH Side (Note: Part of Item 1. Purchase Item 1)	
3	See Note	NSS	Panel, RH Side (Note: Part of Item 1. Purchase Item 1)	
4	7024467	1	Cable, Power	
4	7027775	1	Decal - Electrical Shock Warning (Not Shown)	
5	7027776	1	Handle, Carrying	
101	7024462	1	Panel, Front	
102	7024463	1	Panel, Console	
103	7024469	1	Switch with Lead	
104	7024470	1	Knob	
105	7024471	1	Knob	
106	7024472	1	Receptacle with Leads and Plugs	
107	7024473	2	Receptacle, Twistlock Female	
108	7024474	2	Insulator	
109	7024475	2	O-Ring	
110	7027777	1	Nameplate	
111	7027779	1	Circuit Card Assembly (Process Control)	
112	7024478	2	Nut	
113	7027778	1	Circuit Card Assembly (Operator Interface)	
201	7024462	1	Panel, Rear	
202	7027780	1	Panel, Cover	

SECTION 6 - CYLINDER

SECTION 6 - CYLINDER

FIGURE 6-1. AXLE EXTENSION CYLINDER ASSEMBLY

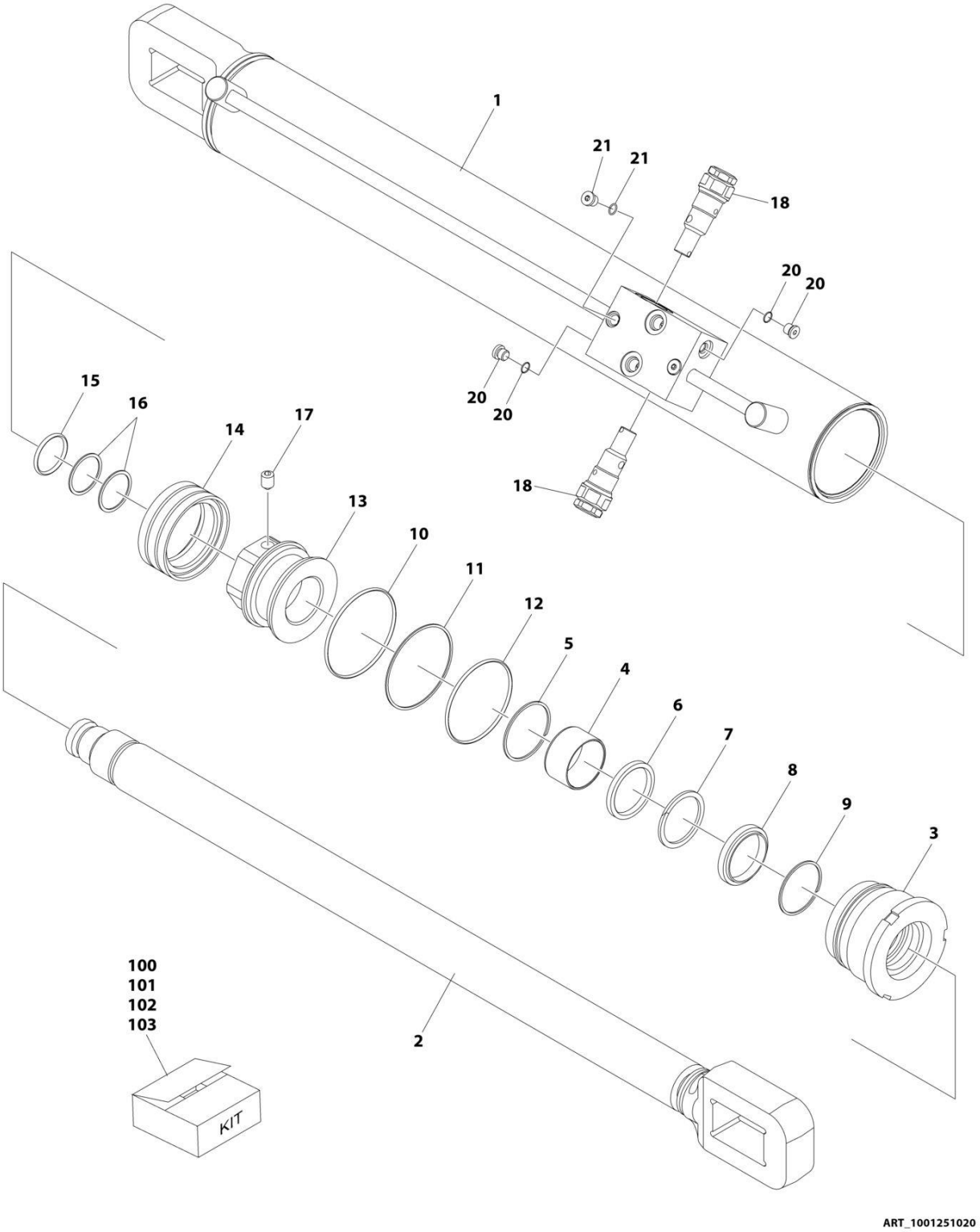

FIGURE 6-1. AXLE EXTENSION CYLINDER ASSEMBLY

ITEM	PART NUMBER	QTY	DESCRIPTION	REV
	1001251020	Ref	AXLE EXTENSION CYLINDER ASSEMBLY	A
		Ref	Note: Original Cylinder May Have Been Replaced with Service Replacement. Identify PN Stamped on Cylinder Before Ordering Parts.	
1	See Note	NSS	Barrel (Note: Use p/n 1001251020)	
2	70007382	1	Rod	
3	See Note	NSS	Head (Use Item 100)	
5	See Note	NSS	Ring (Note: Use Item 100)	
6	See Note	NSS	Seal (Note: Use Item 101)	
7	See Note	NSS	Ring, Back-up (Note: Use Item 101)	
8	See Note	NSS	Wiper, Rod (Note: Use Item 101)	
9	See Note	NSS	Ring, Retaining (Note: Use Item 101)	
10	See Note	NSS	O-Ring (Note: Use Item 101)	
11	See Note	NSS	Ring, Back-up (Note: Use Item 101)	
12	See Note	NSS	O-Ring (Note: Use Item 101)	
13	See Note	NSS	Piston (Note: Use Item 102)	
14	See Note	NSS	Seal (Note: Use Item 101)	
15	See Note	NSS	O-Ring (Note: Use Item 101)	
16	See Note	NSS	Ring, Back-up (Note: Use Item 101)	
17	See Note	NSS	Setscrew (Note: Use Item 102)	
18	4640509	2	Cartridge, Holding Valve	
18	2900792	2	Seal Kit - 4640509 Cartridge Valve (1 Per Assembly)	
20	See Note	NSS	Plug (Note: Use Item 103)	
21	See Note	NSS	Plug (Note: Use Item 103)	
100	70007383	1	Rod Cover Kit (Includes Items 3-5)	
101	70007384	1	Seal Kit (Includes Items 6-12 & 14-16)	
102	70007385	1	Piston Kit (Includes Items 13 & 17)	
103	70007386	1	Plug Kit (Includes Items 20 & 21)	

FIGURE 6-2. AXLE LOCKOUT CYLINDER ASSEMBLY

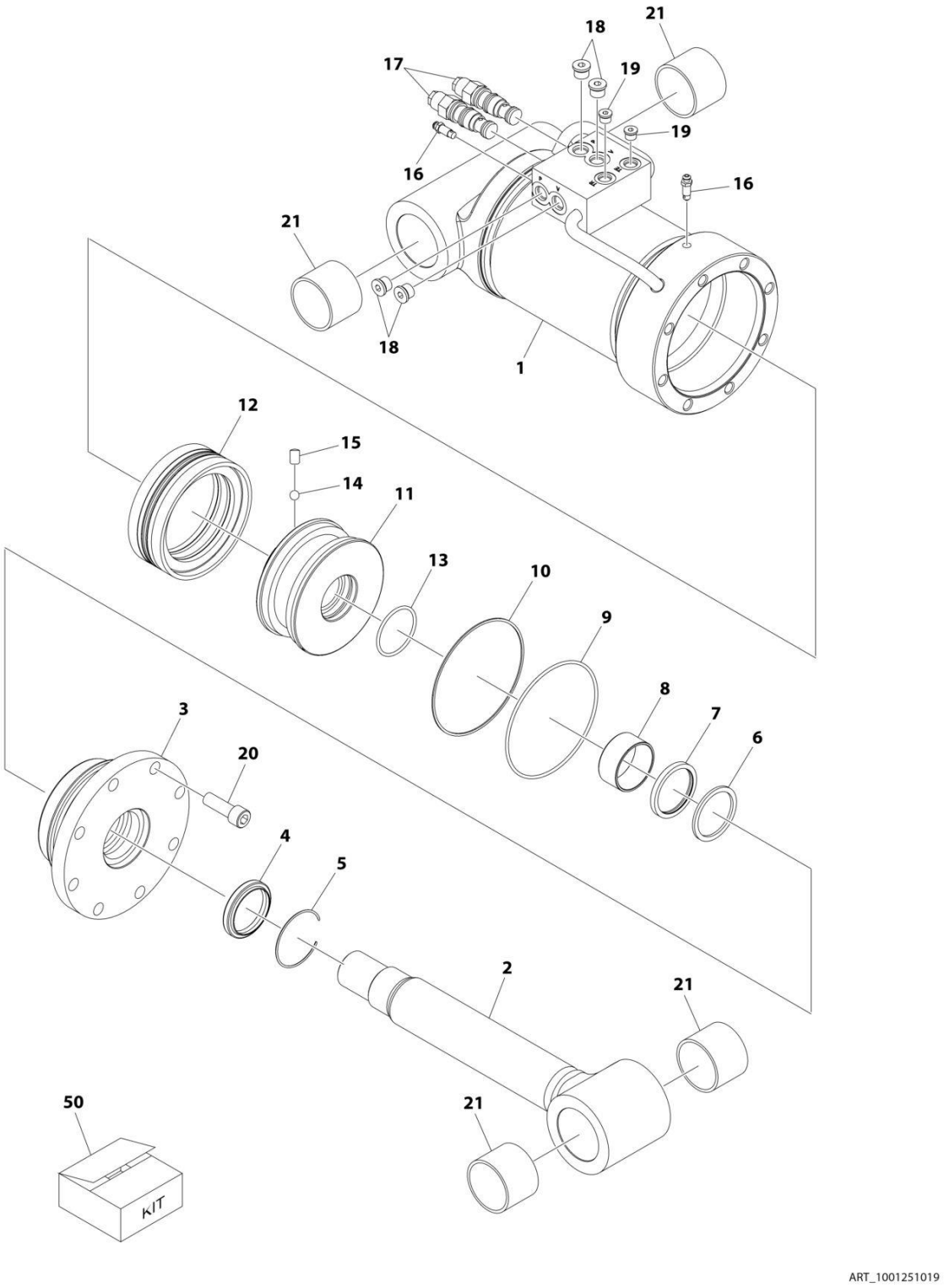

FIGURE 6-2. AXLE LOCKOUT CYLINDER ASSEMBLY

ITEM	PART NUMBER	QTY	DESCRIPTION	REV
	1001251019	Ref	AXLE LOCKOUT CYLINDER ASSEMBLY	B
		Ref	Note: Original Cylinder May Have Been Replaced with Service Replacement. Identify PN Stamped on Cylinder Before Ordering Parts.	
1	See Note	NSS	Barrel (Note: Use PN 1001251019)	
2	70007984	1	Rod	
3	70007985	1	Head	
4	See Note	NSS	Wiper (Note: Use Item 50)	
5	70002412	1	Ring, Retaining	
6	See Note	NSS	Seal, Rod (Note: Use Item 50)	
7	See Note	NSS	Ring, Back-up (Note: Use Item 50)	
8	70005153	1	Bearing	
9	See Note	NSS	O-Ring (Note: Use Item 50)	
10	See Note	NSS	Ring, Back-up (Note: Use Item 50)	
11	7007986	1	Piston	
12	See Note	NSS	Seal, Piston (Note: Use Item 50)	
13	See Note	NSS	O-Ring (Note: Use Item 50)	
14	70022564	1	Ball	
15	70006596	1	Setscrew M8 x 12	
16	70007987	2	Bleeder	
17	4641276	2	Cartridge, Valve - Counterbalance	
17	2900770	2	Seal Kit - 4641276 Valve	
18	2220885	4	Plug 9/16	
19	2220883	2	Plug 7/16	
20	70007988	8	Bolt M12 x 50	
21	0961950	4	Bearing	
50	70007989	1	Seal Kit - 1001251019 Cylinder (Includes Items 4, 6, 7, 9, 10, 12 & 13)	

FIGURE 6-3. PLATFORM LEVEL CYLINDER ASSEMBLY - WITHOUT COLD WEATHER PLUS PACKAGE

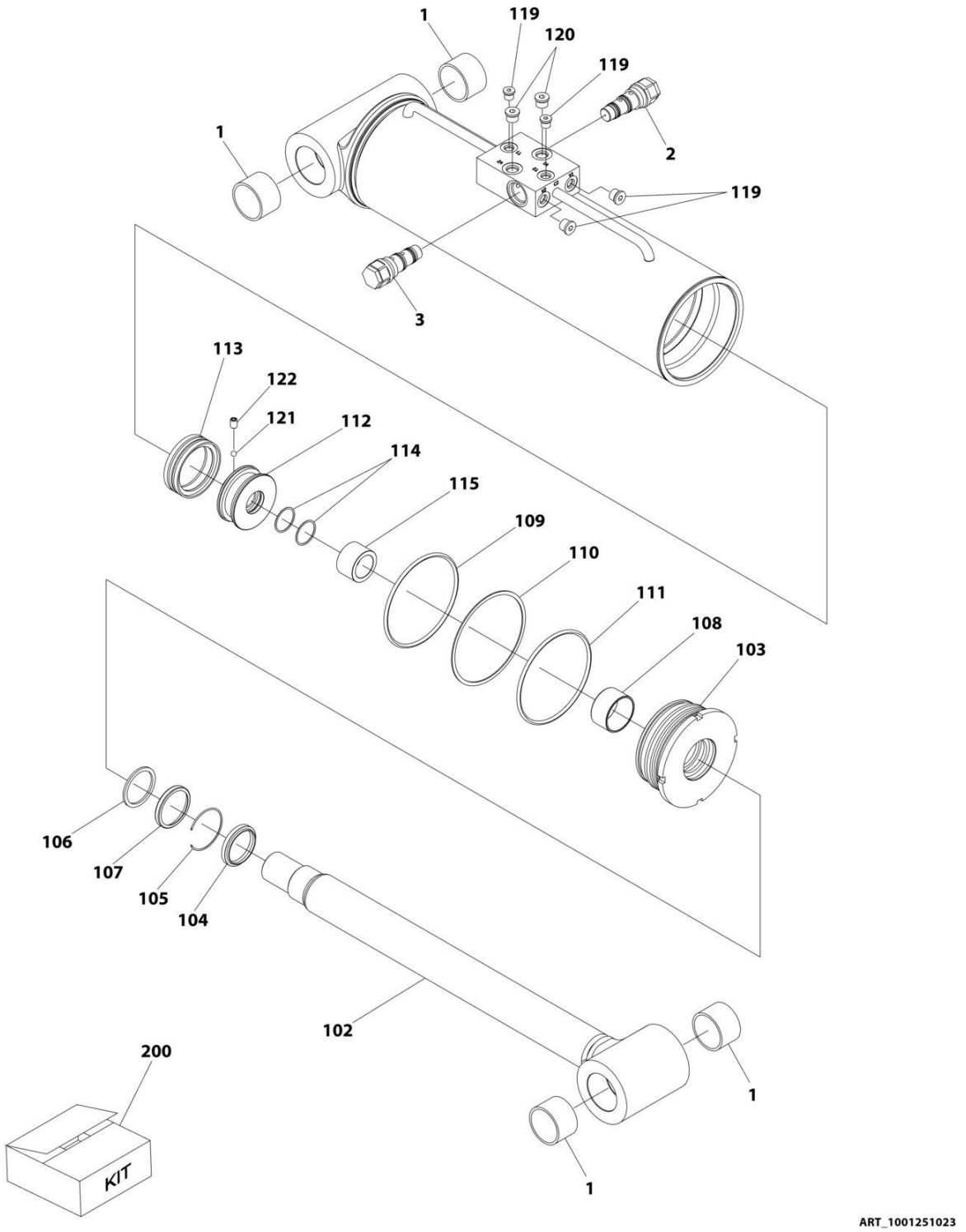

FIGURE 6-3. PLATFORM LEVEL CYLINDER ASSEMBLY - WITHOUT COLD WEATHER PLUS PACKAGE

ITEM	PART NUMBER	QTY	DESCRIPTION	REV
	1001251023	Ref	PLATFORM LEVEL CYLINDER ASSEMBLY	A
		Ref	Note: Original Cylinder May Have Been Replaced with Service Replacement. Identify PN Stamped on Cylinder Before Ordering Parts.	
1	0961949	4	Bushing	
2	4641248	1	Cartridge, Counterbalance Valve (Non-Vented)	
2	70004186	1	Seal Kit - For 4641248 Couterbalance Valve	
3	4640509	1	Cartridge, Holding Valve (Non-Vented)	
3	2900792	1	Seal Kit - For 4640509 Holding Valve	
102	70007999	1	Rod	
103	70008000	1	Head	
104	See Note	NSS	Wiper (Note: Use Item 200)	
105	70002412	1	Ring, Retaining	
106	See Note	NSS	Seal (Note: Use Item 200)	
107	See Note	NSS	Ring (Note: Use Item 200)	
108	70052577	1	Bearing	
109	See Note	NSS	O-Ring (Note: Use Item 200)	
110	See Note	NSS	Ring (Note: Use Item 200)	
111	See Note	NSS	O-Ring (Note: Use Item 200)	
112	70008001	1	Piston	
113	See Note	NSS	Seal (Note: Use Item 200)	
114	See Note	NSS	O-Ring (Note: Use Item 200)	
115	70008002	1	Spacer	
119	2220883	4	Plug 7/16	
120	2220885	2	Plug 9/16	
121	70022564	1	Ball, Steel	
122	70006596	1	Setscrew M8 x 1-1/4	
200	70008003	1	Seal Kit (Includes Items 4, 6, 7, 9-11, 13 & 14)	

FIGURE 6-4. PLATFORM LEVEL CYLINDER ASSEMBLY - WITH COLD WEATHER PLUS PACKAGE

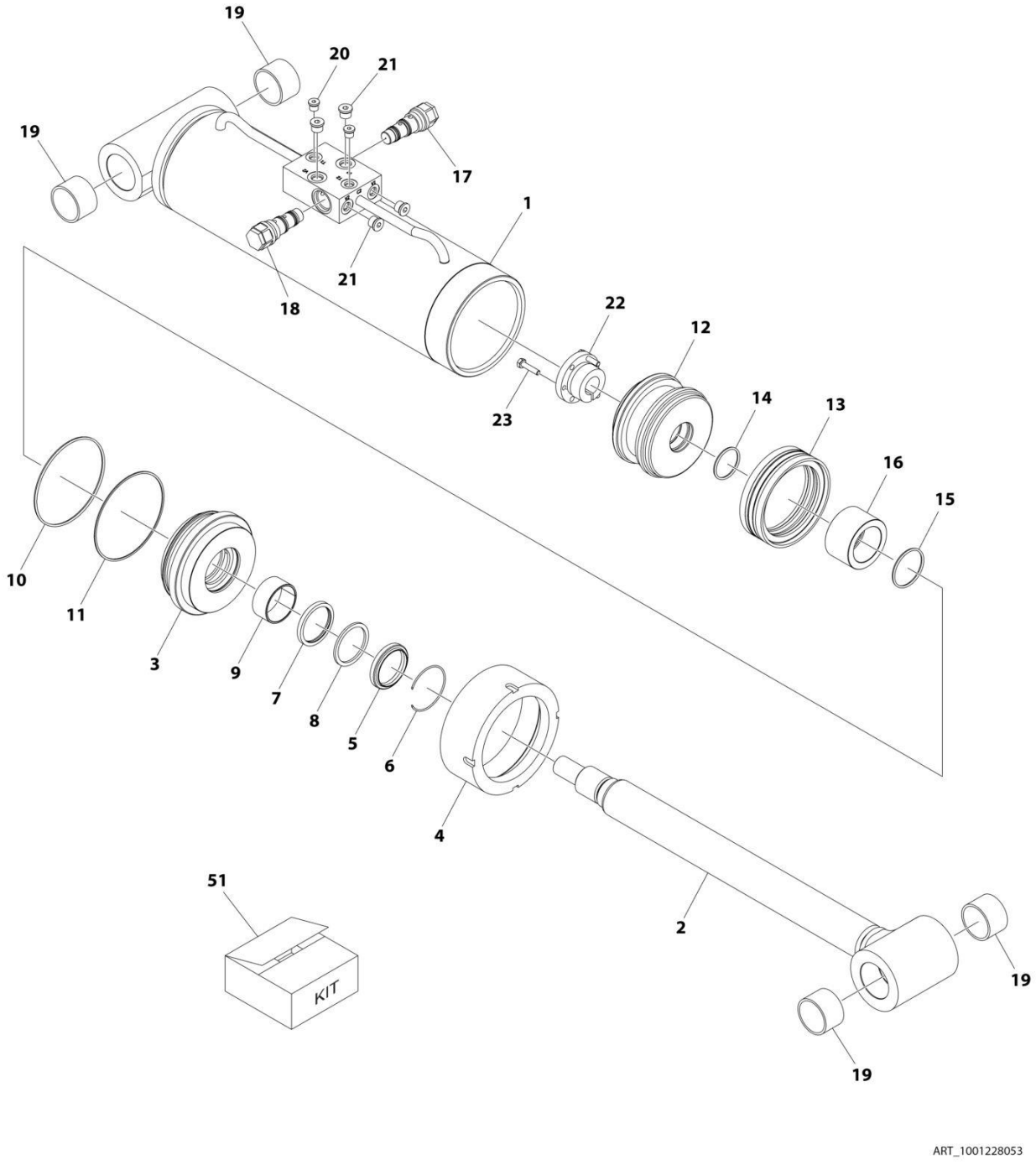

FIGURE 6-4. PLATFORM LEVEL CYLINDER ASSEMBLY - WITH COLD WEATHER PLUS PACKAGE

ITEM	PART NUMBER	QTY	DESCRIPTION	REV
	1001228053	Ref	PLATFORM LEVEL CYLINDER ASSEMBLY - WITH COLD WEATHER PLUS PACKAGE	B
		Ref	Note: Original Cylinder May Have Been Replaced with Service Replacement. Identify PN Stamped on Cylinder Before Ordering Parts.	
1	See Note	NSS	Barrel (Note: Not Available for Purchase)	
2	70007015	1	Rod	
3	70007016	1	Head	
4	70007017	1	Cap, Cylinder	
5	See Note	NSS	Wiper, Rod (Note: Use Item 51)	
6	70002412	1	Retainer	
7	See Note	NSS	Seal, Rod (Note: Use Item 51)	
8	See Note	NSS	Ring, Back-up (Note: Use Item 51)	
9	70005153	1	Ring, Wear	
10	See Note	NSS	O-Ring (Note: Use Item 51)	
11	See Note	NSS	Ring, Back-up (Note: Use Item 51)	
12	70007018	1	Piston	
13	See Note	NSS	Seal, Piston (Note: Use Item 51)	
14	See Note	NSS	O-Ring (Note: Use Item 51)	
15	See Note	NSS	O-Ring (Note: Use Item 51)	
16	70007019	1	Spacer	
17	4640509	1	Cartridge, Holding Valve (Non-Vented)	
17	2900792	1	Seal Kit - 4640509 Cartridge Valve	
18	4641248	1	Cartridge, Counterbalance Valve (Non-Vented)	
18	70004186	1	Seal Kit - 4641248 Cartridge Valve	
19	0961949	4	Bushing	
20	2220883	2	Plug, O-Ring	
21	2220885	4	Plug, O-Ring	
22	0961894	1	Bushing, Tapered	
23	0630535	3	Capscrew 1/4 x 1-1/8	
51	70007020	1	Seal Kit Options (Includes Items 5, 7, 8, 10, 11 & 13-15)	

SECTION 6 - CYLINDER

FIGURE 6-5. LIFT CYLINDER ASSEMBLY

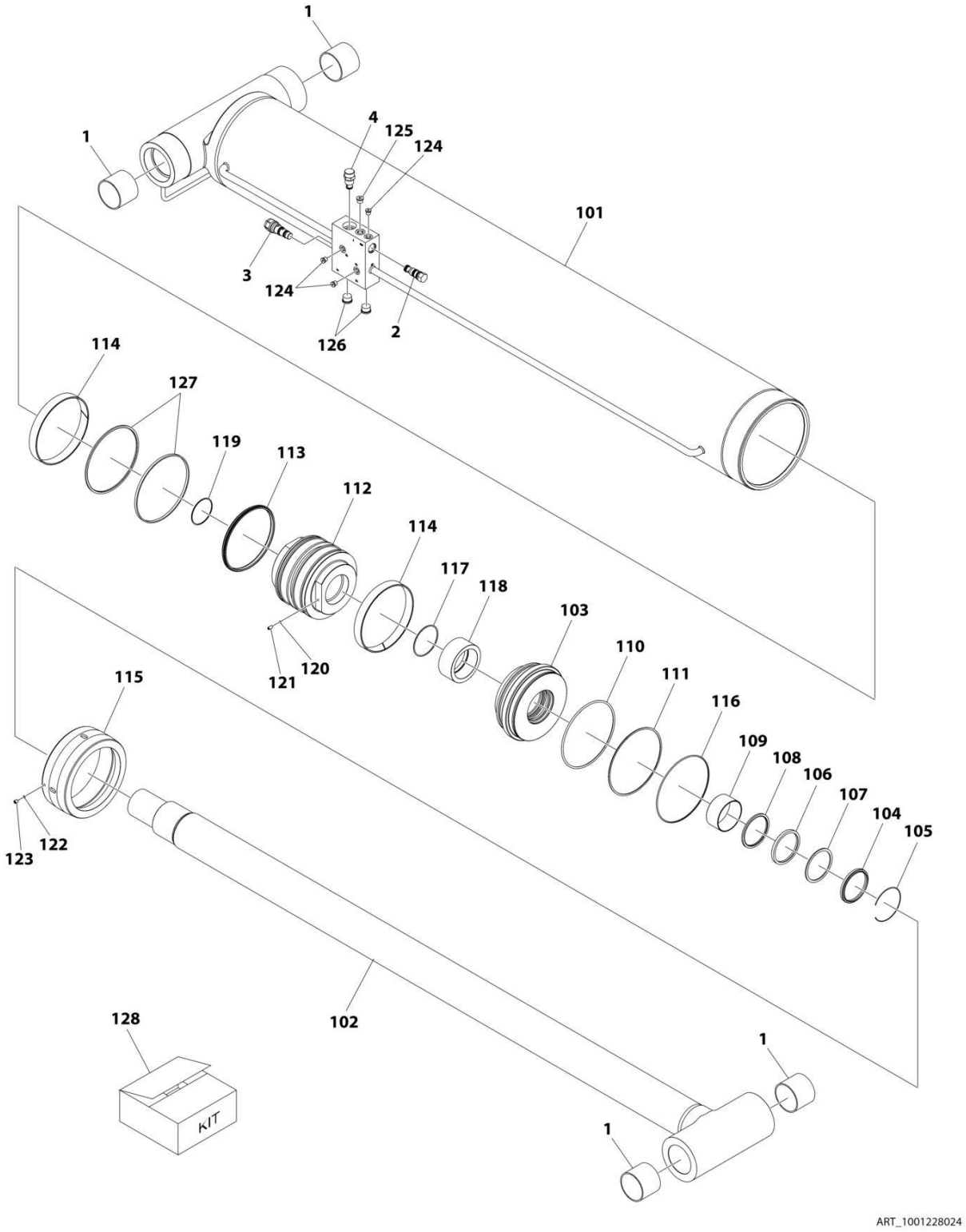

FIGURE 6-5. LIFT CYLINDER ASSEMBLY

ITEM	PART NUMBER	QTY	DESCRIPTION	REV
	1001251024	Ref	LIFT CYLINDER ASSEMBLY	A
		Ref	Note: Original Cylinder May Have Been Replaced with Service Replacement. Identify PN Stamped on Cylinder Before Ordering Parts.	
1	0962297	4	Bushing	
2	4640438	1	Cartridge, Check Valve	
2	2900770	1	Seal Kit - 4640438 Cartridge Valve	
3	4640509	1	Cartridge, Holding Valve (Non-Vented)	
3	2900792	1	Seal Kit - 4640509 Cartridge Valve	
4	4641210	1	Cartridge, Pressure Regulator Valve	
4	7010545	1	Seal Kit - 4641210 Cartridge Valve	
101	See Note	NSS	Tube (Note: Not Available for Purchase)	
102	70008180	1	Rod	
103	70008181	1	Head	
104	See Note	NSS	Wiper, Dust (Note: Use Item 128)	
105	70026283	1	Ring, Retaining	
106	See Note	NSS	Seal, Rod (Note: Use Item 128)	
107	See Note	NSS	Ring, Backup (Note: Use Item 128)	
108	See Note	NSS	Ring, Buffer (Note: Use Item 128)	
109	70008182	1	Bushing	
110	See Note	NSS	O-Ring (Note: Use Item 128)	
111	See Note	NSS	Ring, Backup (Note: Use Item 128)	
112	70008183	1	Piston	
113	See Note	NSS	Seal, Piston (Note: Use Item 128)	
114	See Note	NSS	Ring, Wear (Note: Use Item 128)	
115	70007435	1	Cap, Tube	
116	See Note	NSS	O-Ring (Note: Use Item 128)	
117	See Note	NSS	O-Ring (Note: Use Item 128)	
118	70008184	1	Spacer	
119	See Note	NSS	O-Ring (Note: Use Item 128)	
120	70022564	1	Ball, Steel	
121	70007246	1	Setscrew	
122	70007282	1	Insert, Locking	
123	70007438	1	Setscrew	
124	2220883	3	Plug 7/16	
125	2220885	1	Plug 9/16	
126	70005433	2	Plug 7/8	
127	See Note	NSS	Ring, Dust (Note: Use Item 128)	
128	70008185	1	Seal Kit (Includes Items 104, 106-108, 110-111, 113-114, 116-117, 119 & 127)	

SECTION 6 - CYLINDER

FIGURE 6-6. JIB CYLINDER ASSEMBLY - WITH OR WITHOUT COLD WEATHER PLUS PACKAGE

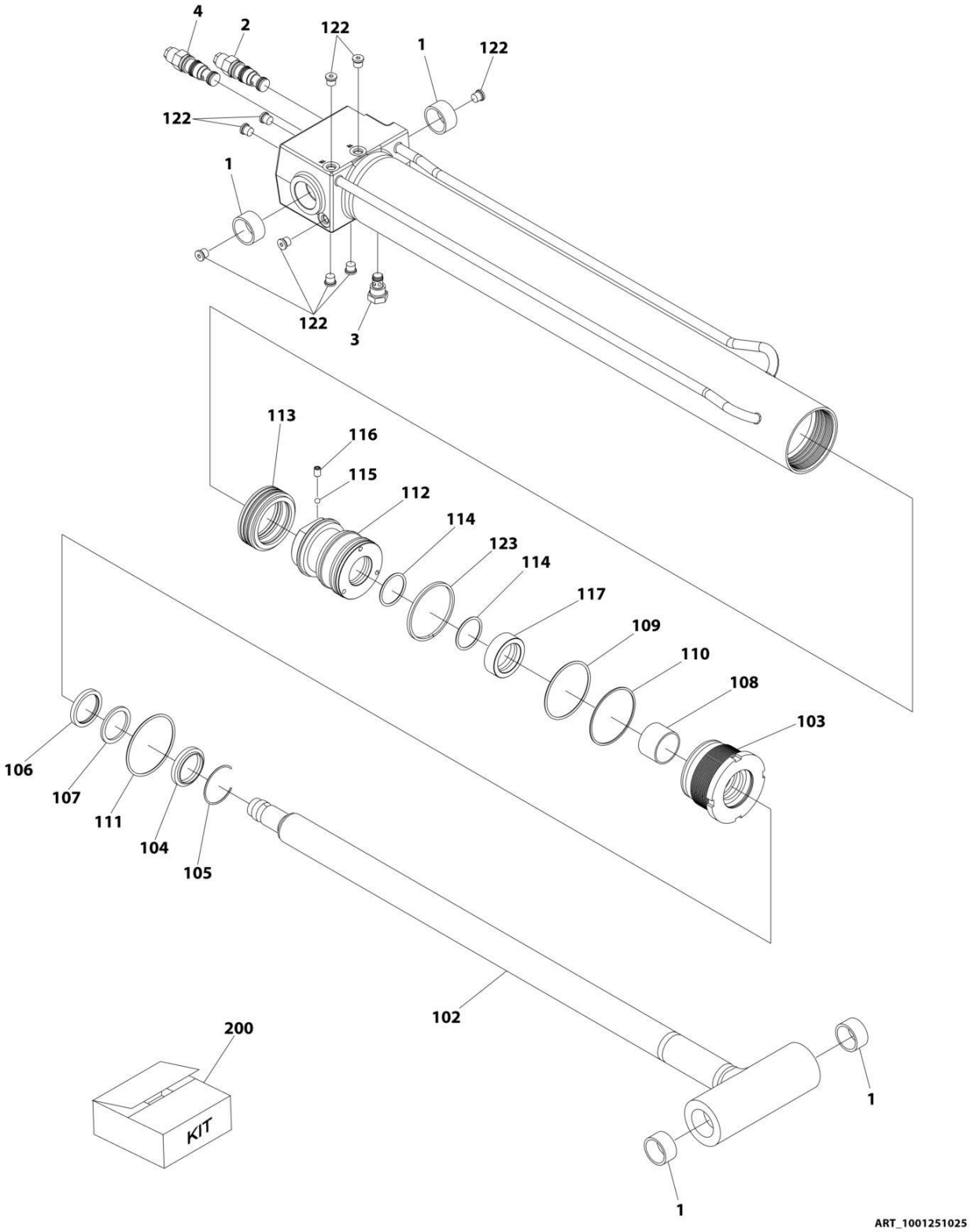

FIGURE 6-6. JIB CYLINDER ASSEMBLY - WITH OR WITHOUT COLD WEATHER PLUS PACKAGE

ITEM	PART NUMBER	QTY	DESCRIPTION	REV
	1001251025	Ref	JIB CYLINDER ASSEMBLY	A
		Ref	Note: Original Cylinder May Have Been Replaced with Service Replacement. Identify PN Stamped on Cylinder Before Ordering Parts.	
1	0962257	4	Bushing	
2	4640452	1	Valve, Counterbalance	
2	2900770	1	Seal Kit - For 4640452 Counterbalance Valve	
3	4641114	1	Valve, Check	
3	7012998	1	Seal Kit - For 4641114 Check Valve	
4	4641260	1	Valve, Counterbalance	
4	2900770	1	Seal Kit - For 4641260 Counterbalance Valve	
102	70007993	1	Rod	
103	70007994	1	Head	
104	See Note	NSS	Wiper (Note: Use Item 200)	
105	70002373	1	Ring, Retaining	
106	See Note	NSS	Seal (Note: Use Item 200)	
107	See Note	NSS	Ring (Note: Use Item 200)	
108	70005143	1	Bearing	
109	See Note	NSS	O-Ring (Note: Use Item 200)	
110	See Note	NSS	Ring (Note: Use Item 200)	
111	See Note	NSS	O-Ring (Note: Use Item 200)	
112	70007995	1	Piston	
113	See Note	NSS	Seal (Note: Use Item 200)	
114	See Note	NSS	O-Ring (Note: Use Item 200)	
115	70022564	1	Ball, Steel	
116	70006596	1	Setscrew M8 x 1-1/4	
117	70007996	1	Spacer	
122	2220883	9	Plug	
123	70007997	1	Ring	
200	70007998	1	Seal Kit (Includes Items 104, 106, 107, 109-111, 113 & 114)	

FIGURE 6-7. STEER CYLINDER ASSEMBLY

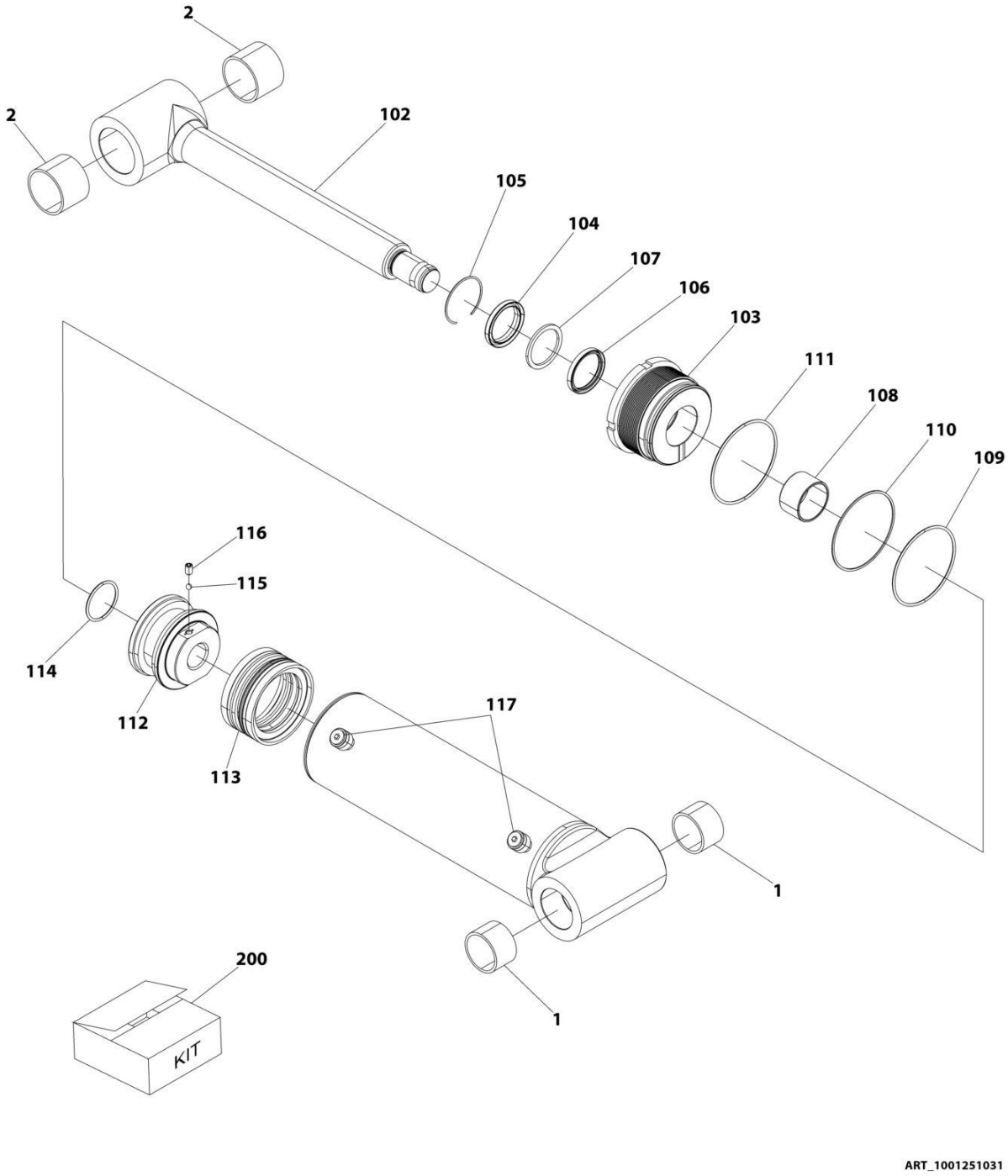

FIGURE 6-7. STEER CYLINDER ASSEMBLY

ITEM	PART NUMBER	QTY	DESCRIPTION	REV
	1001251031	Ref	STEER CYLINDER ASSEMBLY	A
		Ref	Note: Original Cylinder May Have Been Replaced with Service Replacement. Identify PN Stamped on Cylinder Before Ordering Parts.	
1	0961949	2	Bushing	
2	0961950	2	Bushing	
102	70008004	1	Rod	
103	70008005	1	Head	
104	See Note	NSS	Wiper (Note: Use Item 200)	
105	70002410	1	Ring, Retaining	
106	See Note	NSS	Seal (Note: Use Item 200)	
107	See Note	NSS	Ring (Note: Use Item 200)	
108	70004237	1	Bearing	
109	See Note	NSS	O-Ring (Note: Use Item 200)	
110	See Note	NSS	Ring (Note: Use Item 200)	
111	See Note	NSS	O-Ring (Note: Use Item 200)	
112	70008006	1	Piston	
113	See Note	NSS	Seal (Note: Use Item 200)	
114	See Note	NSS	O-Ring (Note: Use Item 200)	
115	70022564	1	Ball, Steel	
116	70006596	1	Setscrew M8 x 1-1/4	
117	2220885	2	Plug	
200	70008007	1	Seal Kit (Includes Items 104, 106, 107, 109-111, 113 & 114)	

FIGURE 6-8. TELESCOPE CYLINDER ASSEMBLY (1200SJP)

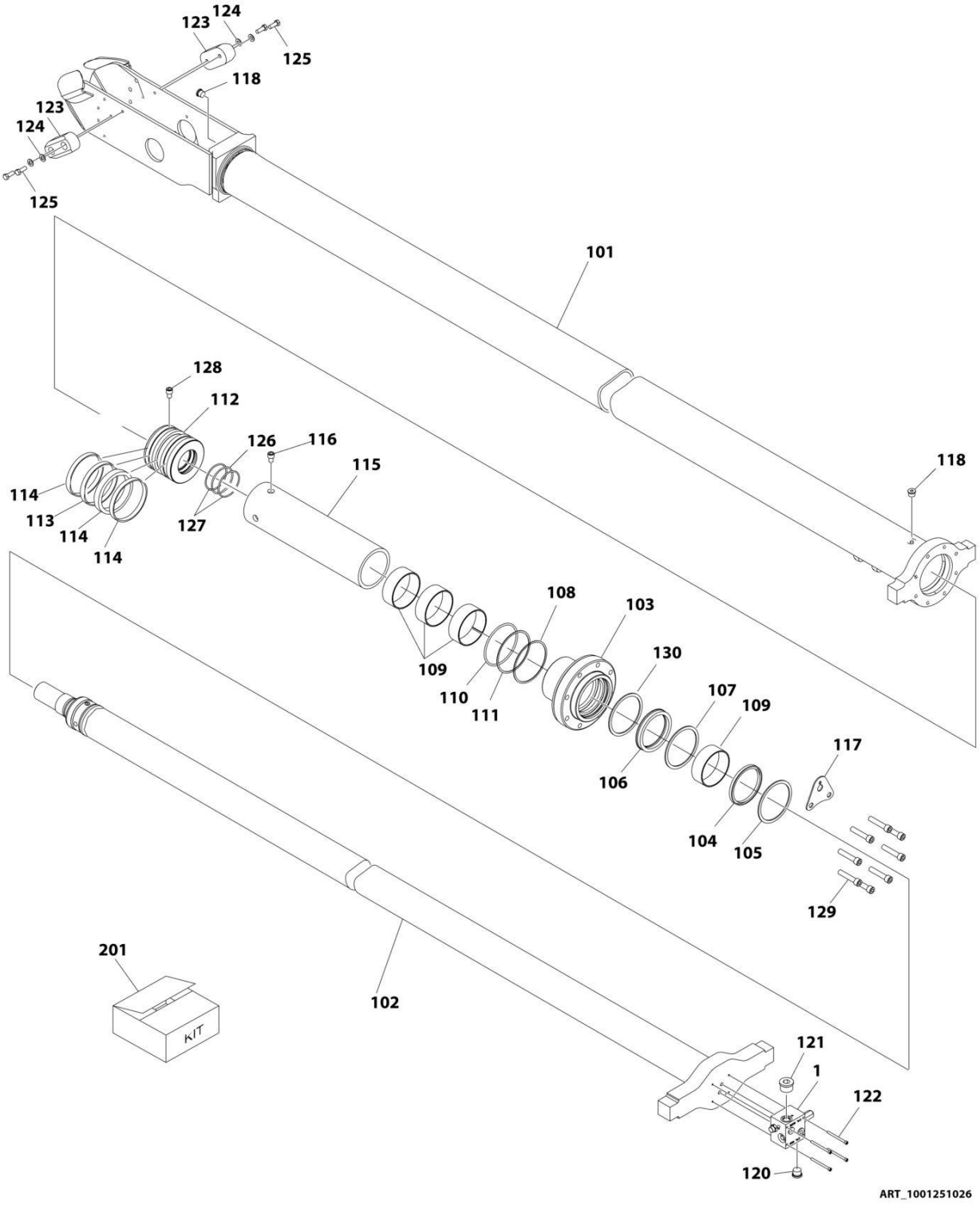

FIGURE 6-8. TELESCOPE CYLINDER ASSEMBLY (1200SJP)

ITEM	PART NUMBER	QTY	DESCRIPTION	REV
	1001251026	Ref	TELESCOPE CYLINDER ASSEMBLY	A
		Ref	Note: Original Cylinder May Have Been Replaced with Service Replacement. Identify PN Stamped on Cylinder Before Ordering Parts.	
1	4641256	1	Valve Assembly	
1	2220884	1	Plug, SAE #5 (With O-Ring)	
1	2220885	1	Plug, SAE #6 (With O-Ring)	
101	SEE NOTE	NSS	Tube (Note: Not Available for Purchase)	
102	70008039	1	Rod	
103	70008040	1	Gland	
104	SEE NOTE	NSS	Wiper, Dust (Note: Use Item 201)	
105	70026283	1	Ring, Retaining	
106	SEE NOTE	NSS	Seal, Rod (Note: Use Item 201)	
107	SEE NOTE	NSS	Ring, Backup (Note: Use Item 201)	
108	SEE NOTE	NSS	Ring, Buffer (Note: Use Item 201)	
109	SEE NOTE	NSS	Ring, Wear (Note: Use Item 201)	
110	SEE NOTE	NSS	O-Ring (Note: Use Item 201)	
111	SEE NOTE	NSS	Ring, Backup (Note: Use Item 201)	
112	700089041	1	Piston	
113	SEE NOTE	NSS	Seal, Piston (Note: Use Item 201)	
114	SEE NOTE	NSS	Ring, Wear (Note: Use Item 201)	
115	70008042	1	Spacer	
116	70008043	1	Bolt M8 X 16	
117	70008044	1	Bracket	
118	2220885	2	Plug, O-Ring	
120	2220886	1	Plug, O-Ring	
121	2220887	1	Plug, O-Ring	
122	70008045	4	Bolt M6 X 80	
123	70008046	2	Pad	
124	70006344	4	Washer	
125	70008047	4	Bolt M10 X 25	
126	SEE NOTE	NSS	O-Ring (Note: Use Item 201)	
127	SEE NOTE	NSS	Ring, Backup (Note: Use Item 201)	
128	70005839	1	Screw, Set	
129	70008048	8	Bolt M14 X 65	
130	70008049	1	Ring, Washer	
201	70008050	1	Seal Kit (Includes Items 104, 106-111, 113-114 & 126-127)	

FIGURE 6-9. TELESCOPE CYLINDER ASSEMBLY (1350SJP)

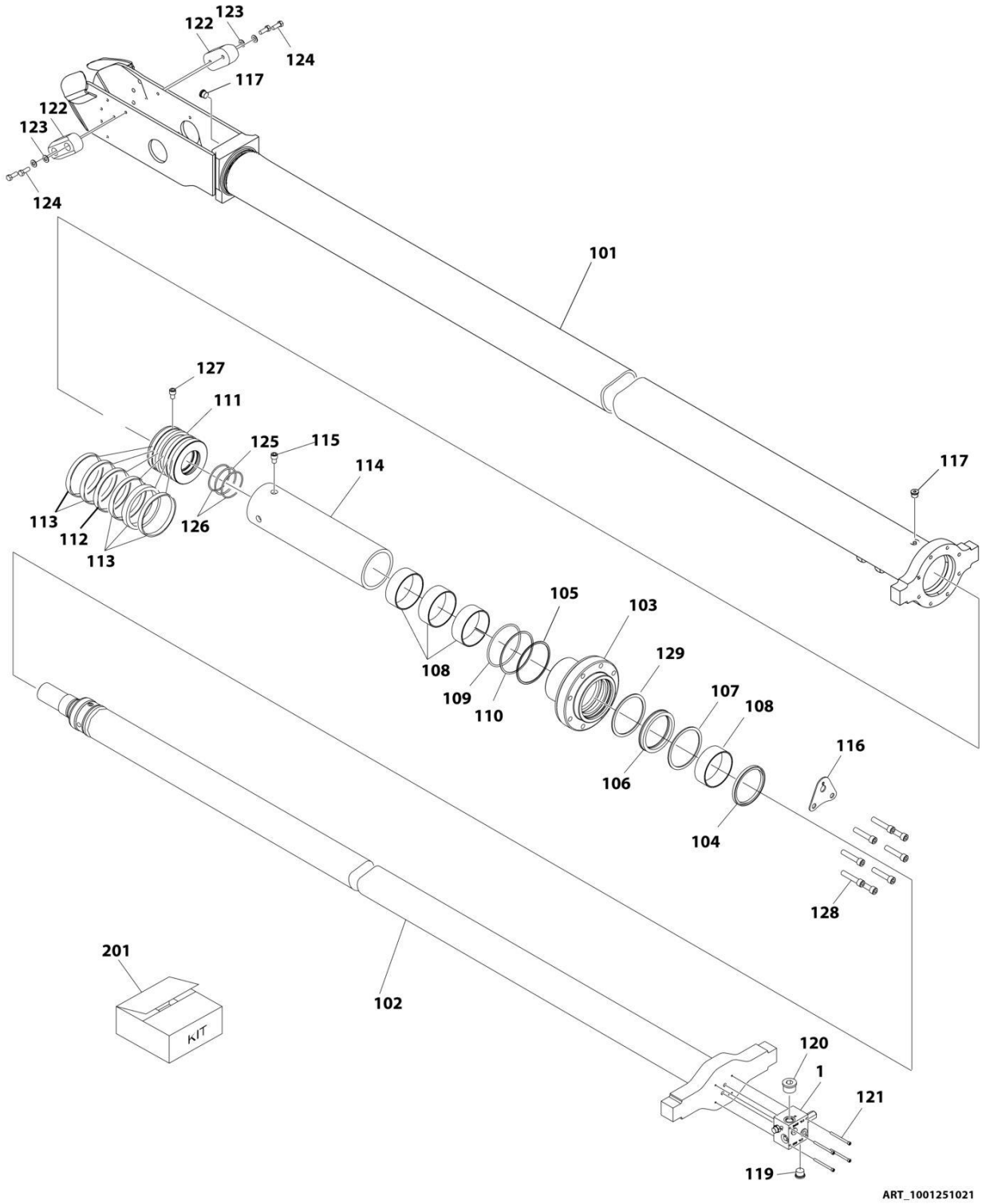

FIGURE 6-9. TELESCOPE CYLINDER ASSEMBLY (1350SJP)

ITEM	PART NUMBER	QTY	DESCRIPTION	REV
	1001251021	Ref	TELESCOPE CYLINDER ASSEMBLY	A
		Ref	Note: Original Cylinder May Have Been Replaced with Service Replacement. Identify PN Stamped on Cylinder Before Ordering Parts.	
1	4641256	1	Valve Assembly	
101	SEE NOTE	NSS	Barrel (Note: Not Available for Purchase)	
102	70008083	1	Rod	
103	70008084	1	Head	
104	SEE NOTE	NSS	Wiper, Dust (Note: Use Item 201)	
105	SEE NOTE	NSS	Ring, Buffer (Note: Use Item 201)	
106	SEE NOTE	NSS	Seal, Rod (Note: Use Item 201)	
107	SEE NOTE	NSS	Ring, Backup (Note: Use Item 201)	
108	SEE NOTE	NSS	Ring, Wear (Note: Use Item 201)	
109	SEE NOTE	NSS	O-Ring (Note: Use Item 201)	
110	SEE NOTE	NSS	Ring, Backup (Note: Use Item 201)	
111	70008085	1	Piston	
112	SEE NOTE	NSS	Seal, Piston (Note: Use Item 201)	
113	SEE NOTE	NSS	Ring, Wear (Note: Use Item 201)	
114	70008086	1	Spacer	
115	70008043	1	Bolt M8 X 16	
116	70008044	1	Bracket	
117	2220885	2	Plug 9/16	
119	2220886	1	Plug 3/4	
120	70005433	1	Plug 7/8	
121	70008045	4	Bolt M6 X 80	
122	70008046	2	Pad	
123	70006344	4	Washer	
124	70008047	4	Bolt M10 X 25	
125	SEE NOTE	1	O-Ring (Note: Use Item 201)	
126	SEE NOTE	1	Ring, Backup (Note: Use Item 201)	
127	70005839	1	Screw, Set	
128	70008048	8	Bolt M14 X 65	
129	70008049	1	Ring, Washer	
201	70008087	1	Seal Kit (Includes 104-110, 112, 113, 125, 126)	

SECTION 7 - HYDRAULIC

FIGURE 7-1. HYDRAULIC DIAGRAM - BOOM (1200SJP)

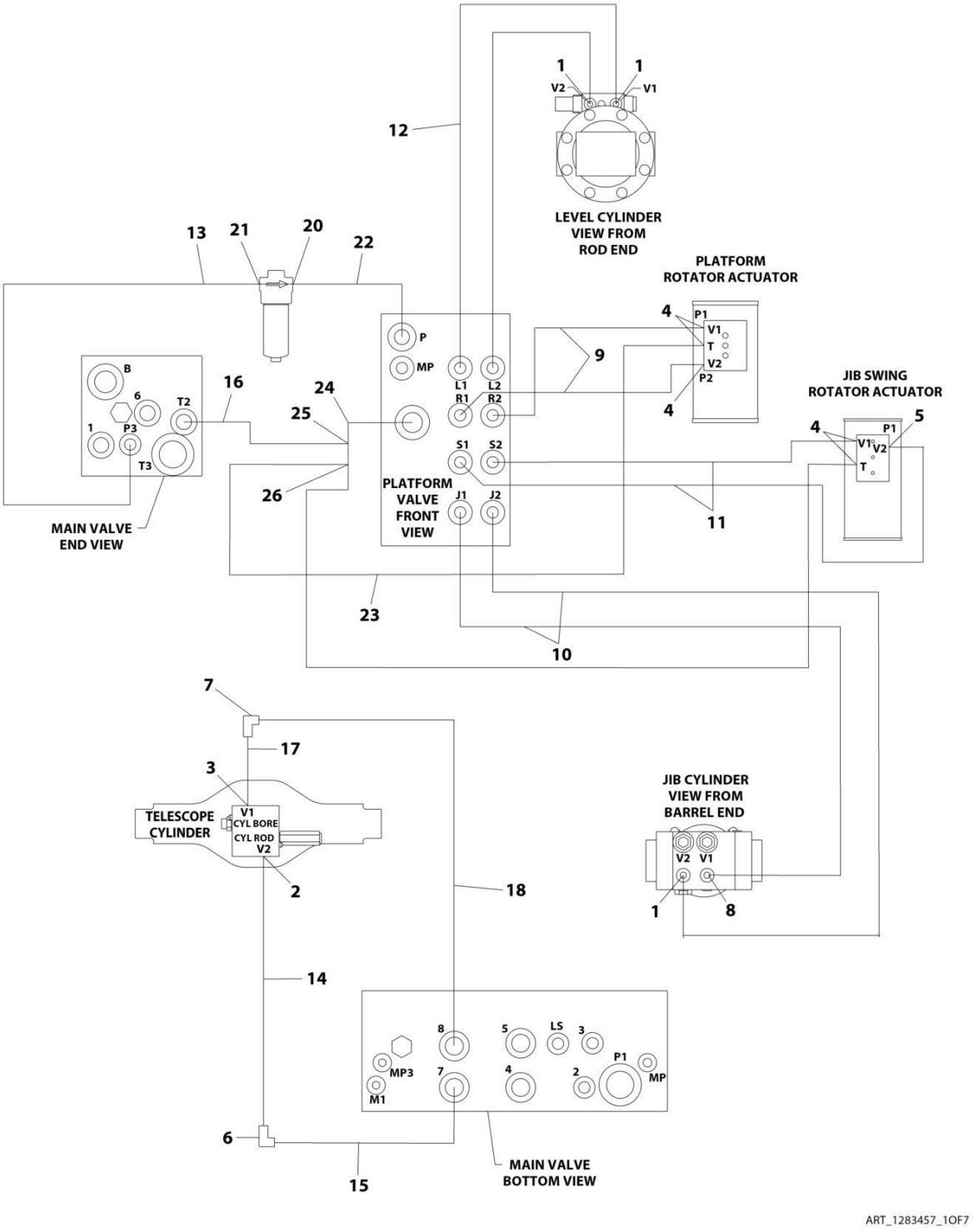

FIGURE 7-1. HYDRAULIC DIAGRAM - BOOM (1200SJP)

ITEM	PART NUMBER	QTY	DESCRIPTION	REV
	1283457	Ref	HYDRAULIC DIAGRAM - BOOM	L
	1001098025	Ref	Hydraulic Diagram - Upper Boom	3
1	2110404	3	Fitting, Straight ORFS/ORB	
2	2110808	1	Fitting, Straight ORFS/ORB	
3	2111010	1	Fitting, Straight ORFS/ORB	
4	2150404	5	Fitting, 45 ORFS/ORB	
5	2170204	1	Fitting, 90 ORFS/ORB	
6	2171208	1	Fitting, Elbow	
7	2171210	1	Fitting, Elbow	
8	2180830	1	Fitting, Orifice	
9	2753545	2	Hose	
10	2753717	2	Hose	
11	2753716	3	Hose	
12	2753552	2	Hose	
13	2753810	1	Hose	
14	2753745	1	Hose	
15	2753755	1	Hose	
16	2753811	1	Hose	
17	2753763	1	Hose	
18	2753767	1	Hose	
20	2110612	1	Fitting, Straight ORFS/ORB	
21	2130612	1	Fitting, 90 ORFS/ORB	
22	2717059	1	Hose	
23	2754288	1	Hose	
24	2170708	1	Fitting, Swivel Nut Run Tee ORFS/FSORFS/ORFS	
25	1001097820	1	Fitting, Adapter ORFS/FSORFS	
26	2170704	1	Fitting, Swivel Nut Run Tee ORFS/FSORFS/ORFS	

FIGURE 7-2. HYDRAULIC DIAGRAM - BOOM (1350SJP)

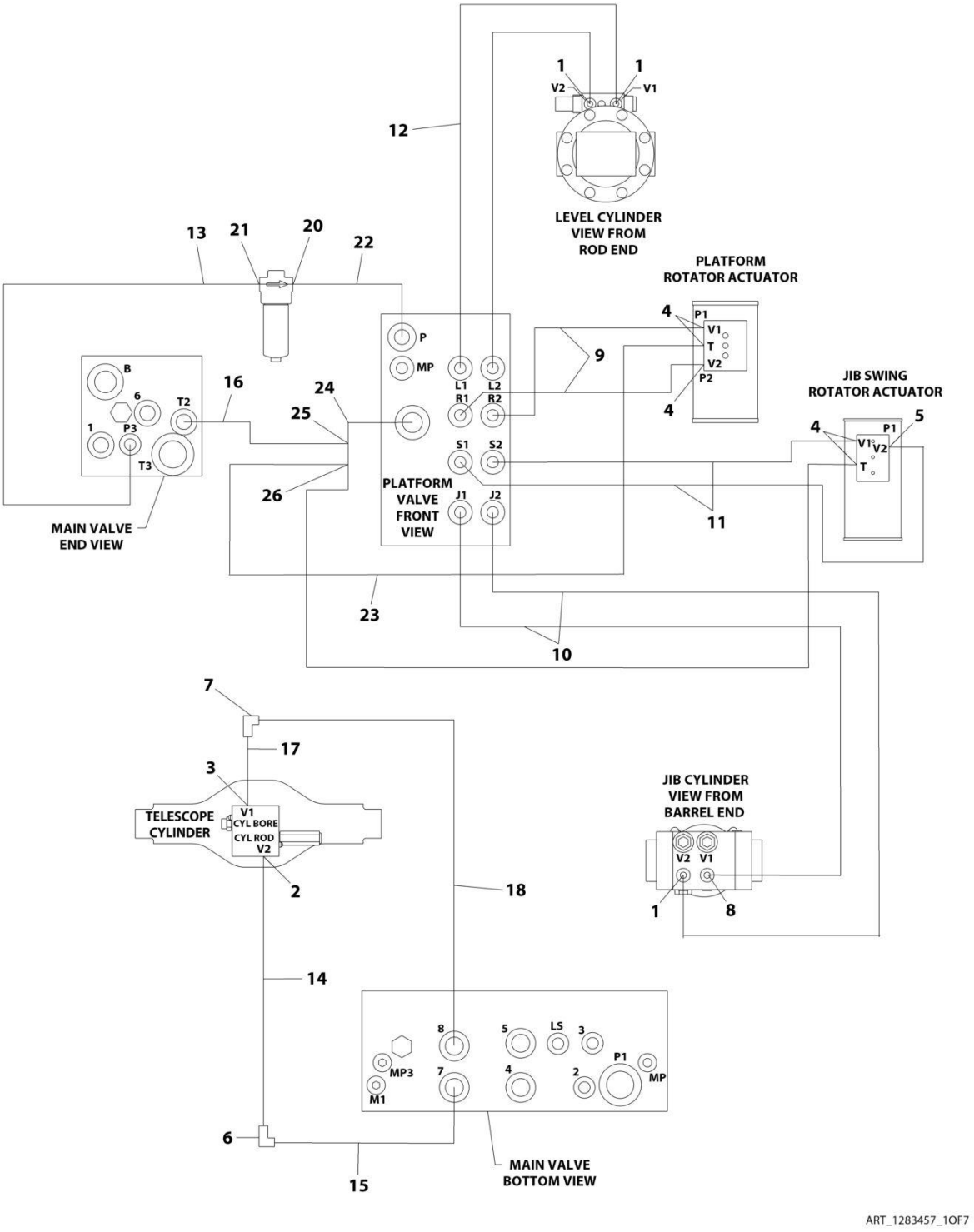

FIGURE 7-2. HYDRAULIC DIAGRAM - BOOM (1350SJP)

ITEM	PART NUMBER	QTY	DESCRIPTION	REV
	1283457	Ref	HYDRAULIC DIAGRAM - BOOM	L
	1001098026	Ref	Hydraulic Diagram - Upper Boom	3
1	2110404	3	Fitting, Straight ORFS/ORB	
2	2110808	1	Fitting, Straight ORFS/ORB	
3	2111010	1	Fitting, Straight ORFS/ORB	
4	2150404	5	Fitting, 45 ORFS/ORB	
5	2170204	1	Fitting, 90 ORFS/ORB	
6	2171208	1	Fitting, Elbow	
7	2171210	1	Fitting, Elbow	
8	2180830	1	Fitting, Orifice	
9	2753545	2	Hose	
10	2753717	2	Hose	
11	2753716	3	Hose	
12	2753552	2	Hose	
13	2753740	1	Hose	
14	2753745	1	Hose	
15	2753755	1	Hose	
16	2753751	1	Hose	
17	2753763	1	Hose	
18	2753767	1	Hose	
20	2110612	1	Fitting, Straight ORFS/ORB	
21	2130612	1	Fitting, 90 ORFS/ORB	
22	2717059	1	Hose	
23	2754288	1	Hose	
24	2170708	1	Fitting, Swivel Nut Run Tee ORFS/FSORFS/ORFS	
25	1001097820	1	Fitting, Adapter ORFS/FSORFS	
26	2170704	1	Fitting, Swivel Nut Run Tee ORFS/FSORFS/ORFS	

FIGURE 7-3. HYDRAULIC DIAGRAM - DRIVE

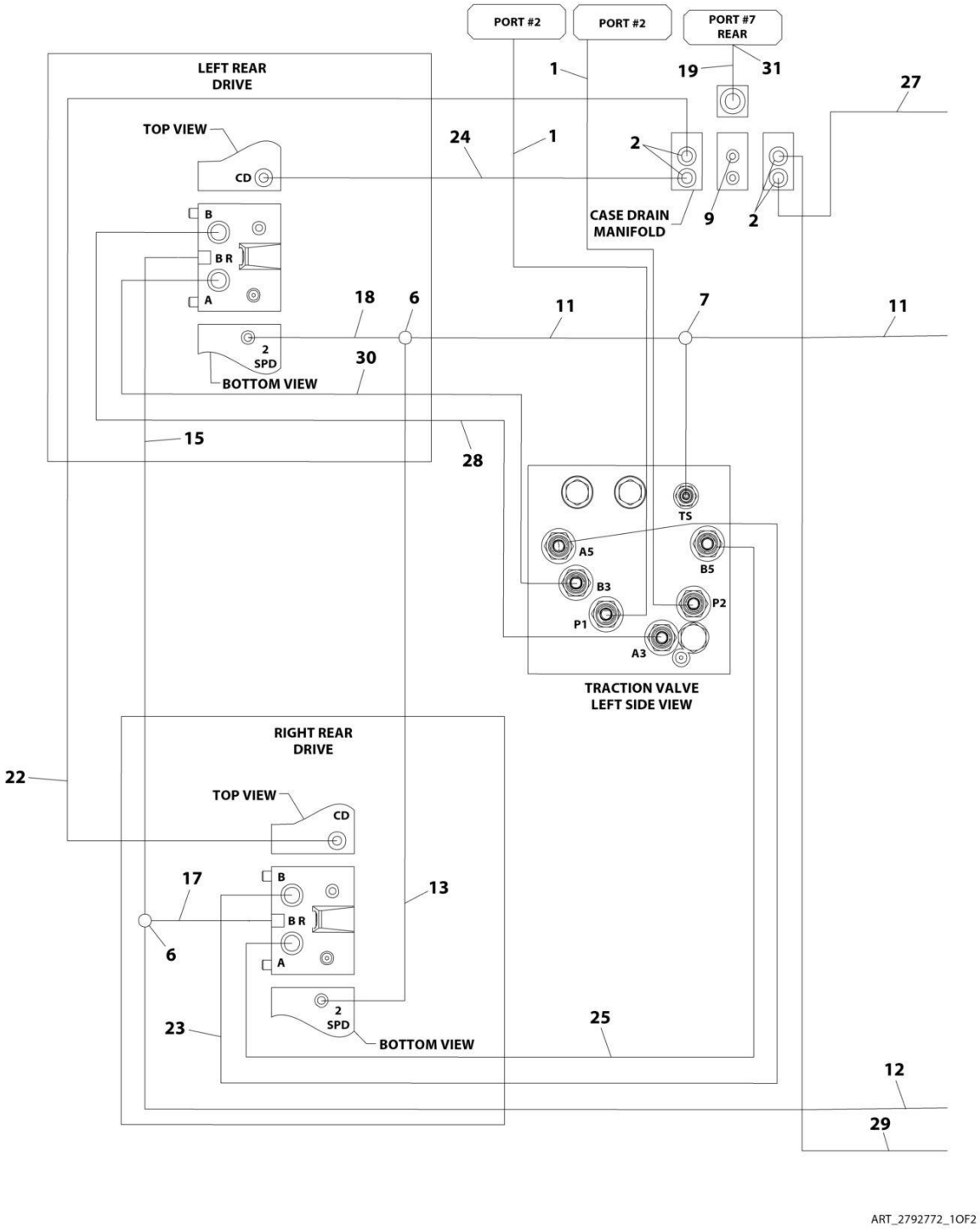

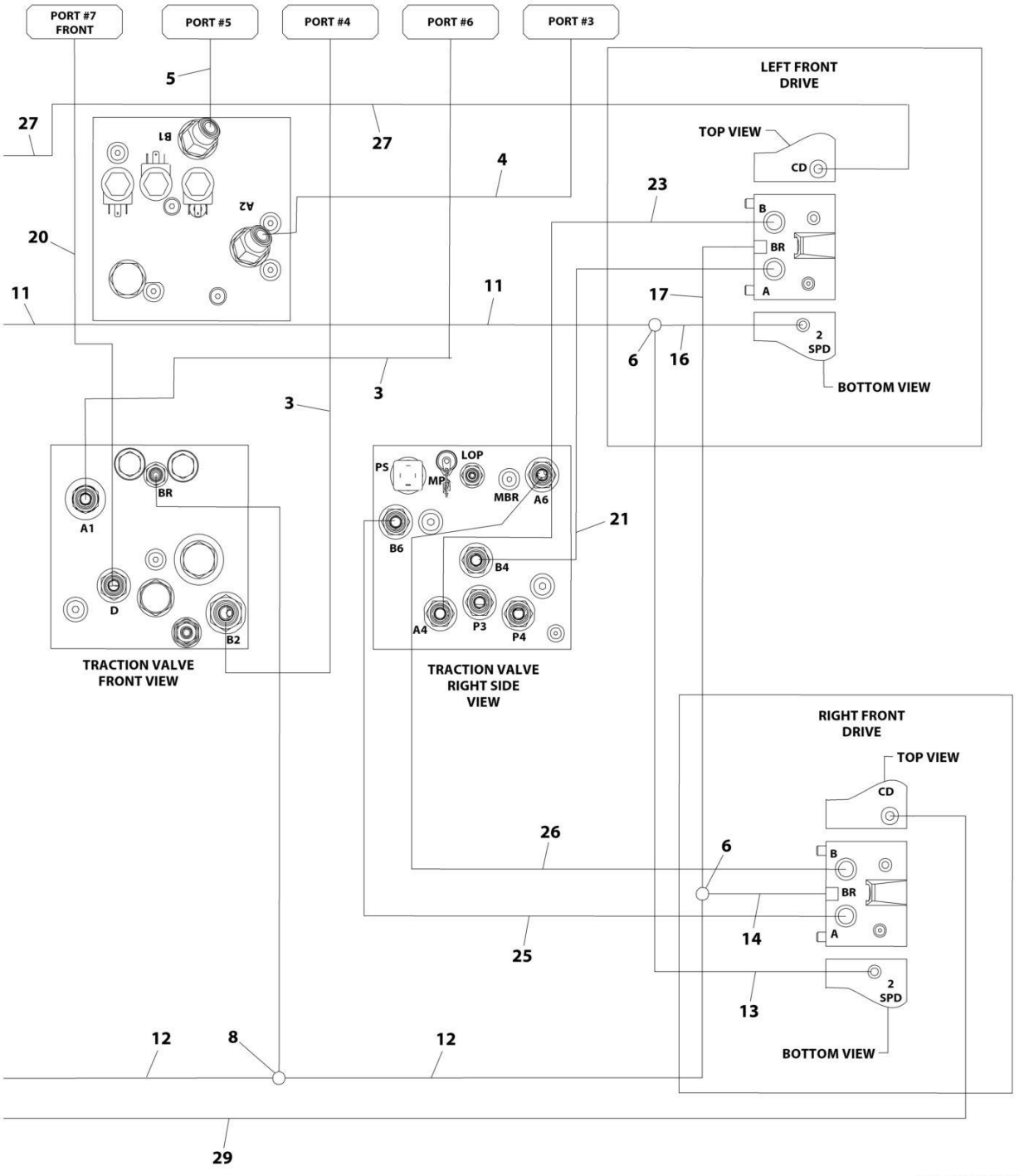
PORT #7 FRONT
PORT #5
PORT #4
PORT #6
PORT #3
LEFT FRONT DRIVE
TOP VIEW
CD
B
BR
A
2 SPD
BOTTOM VIEW
B1
A2
TRACTION VALVE FRONT VIEW
A1
BR
D
B2
TRACTION VALVE RIGHT SIDE VIEW
PS
MP
LOP
MBR
A6
B6
B4
A4
P3
P4
RIGHT FRONT DRIVE
TOP VIEW
CD
B
BR
A
2 SPD
BOTTOM VIEW
5
27
4
20
11
3
23
17
6
16
21
26
14
25
13
12
8
29
ART_2792772_2OF2

FIGURE 7-3. HYDRAULIC DIAGRAM - DRIVE

ITEM	PART NUMBER	QTY	DESCRIPTION	REV
	1283457	Ref	HYDRAULIC DIAGRAM - DRIVE	L
	2792772	Ref	Hydraulic Diagram - Drive Circuit	F
1	2753685	2	Hose	
2	2110808	4	Fitting, Straight ORFS/ORB	
3	2753703	2	Hose	
4	2753764	1	Hose	
5	2753768	1	Hose	
6	2170504	4	Fitting, Tee ORFS	
7	2170704	1	Fitting, Tee ORFS/ORB/ORFS	
8	2170804	1	Fitting, Tee ORFS/ORB/ORFS	
9	2220235	1	Plug	
11	2753541	2	Hose	
12	2753545	2	Hose	
13	2753677	2	Hose	
14	2753714	1	Hose	
15	2753713	1	Hose	
16	2753716	1	Hose	
17	2753715	2	Hose	
18	2753552	1	Hose	
19	2753752	1	Hose	
20	2753582	1	Hose	
21	2753756	1	Hose	
22	2753747	1	Hose	
23	2753757	2	Hose	
24	2753748	1	Hose	
25	2753759	2	Hose	
26	2753760	1	Hose	
27	2753749	1	Hose	
28	2753761	1	Hose	
29	2753750	1	Hose	
30	2753762	1	Hose	
31	2110812	1	Fitting, Straight ORFS/ORB	

FIGURE 7-4. HYDRAULIC DIAGRAM - OSCILLATING AXLE

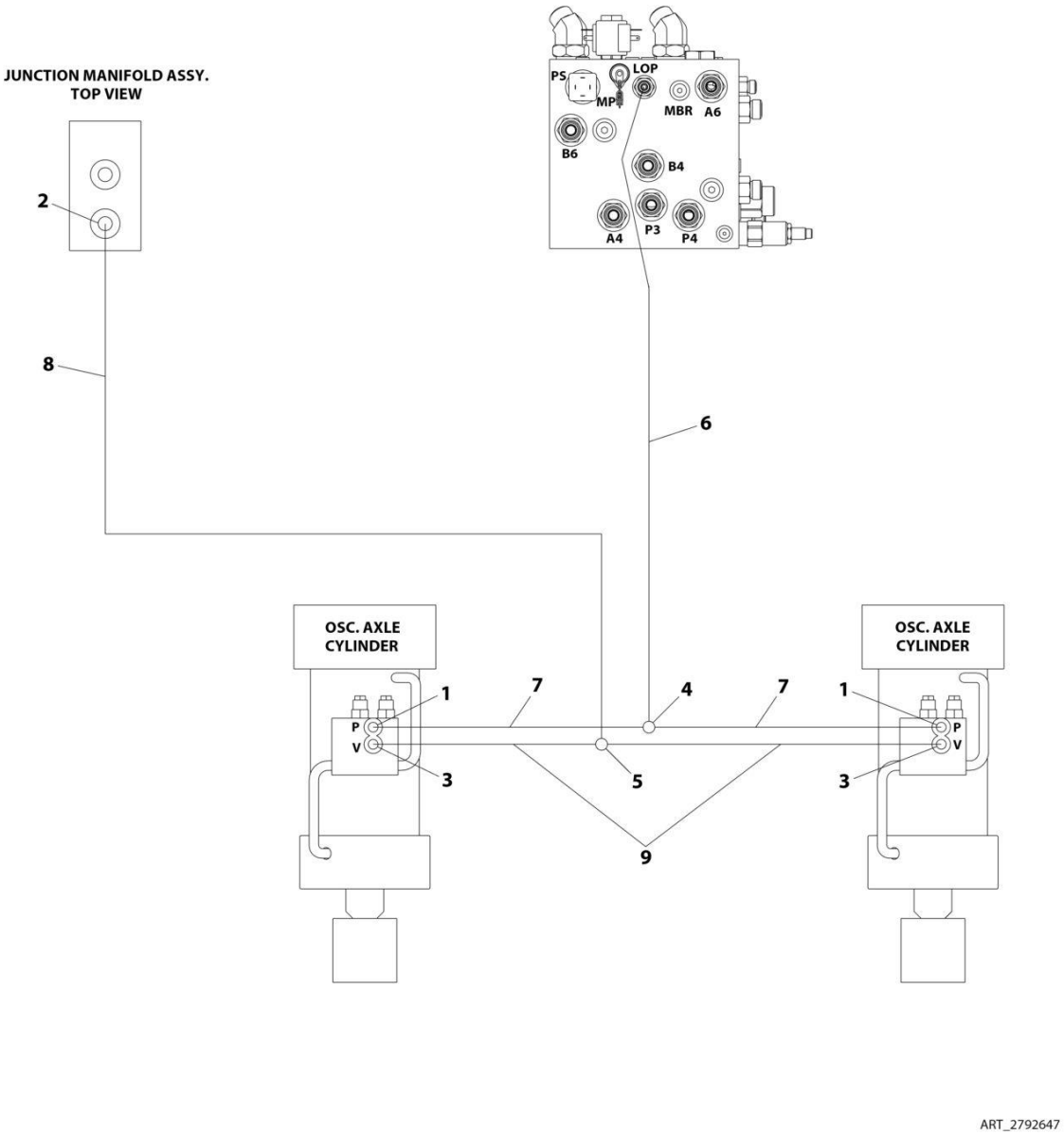

FIGURE 7-4. HYDRAULIC DIAGRAM - OSCILLATING AXLE

ITEM	PART NUMBER	QTY	DESCRIPTION	REV
	1283457	Ref	HYDRAULIC DIAGRAM - OSCILLATING AXLE	L
	2792647	Ref	Hydraulic Diagram - Oscillating Axle	4
1	2110406	2	Fitting, Straight ORFS/ORB	
2	2110604	1	Fitting, Straight ORFS/ORB	
3	2110606	2	Fitting, Straight ORFS/ORB	
4	2170504	1	Fitting, Tee ORFS	
5	2170506	1	Fitting, Tee ORFS	
6	2753726	1	Hose	
7	2753719	2	Hose	
8	2753727	1	Hose	
9	2753729	2	Hose	

FIGURE 7-5. HYDRAULIC DIAGRAM - STEER

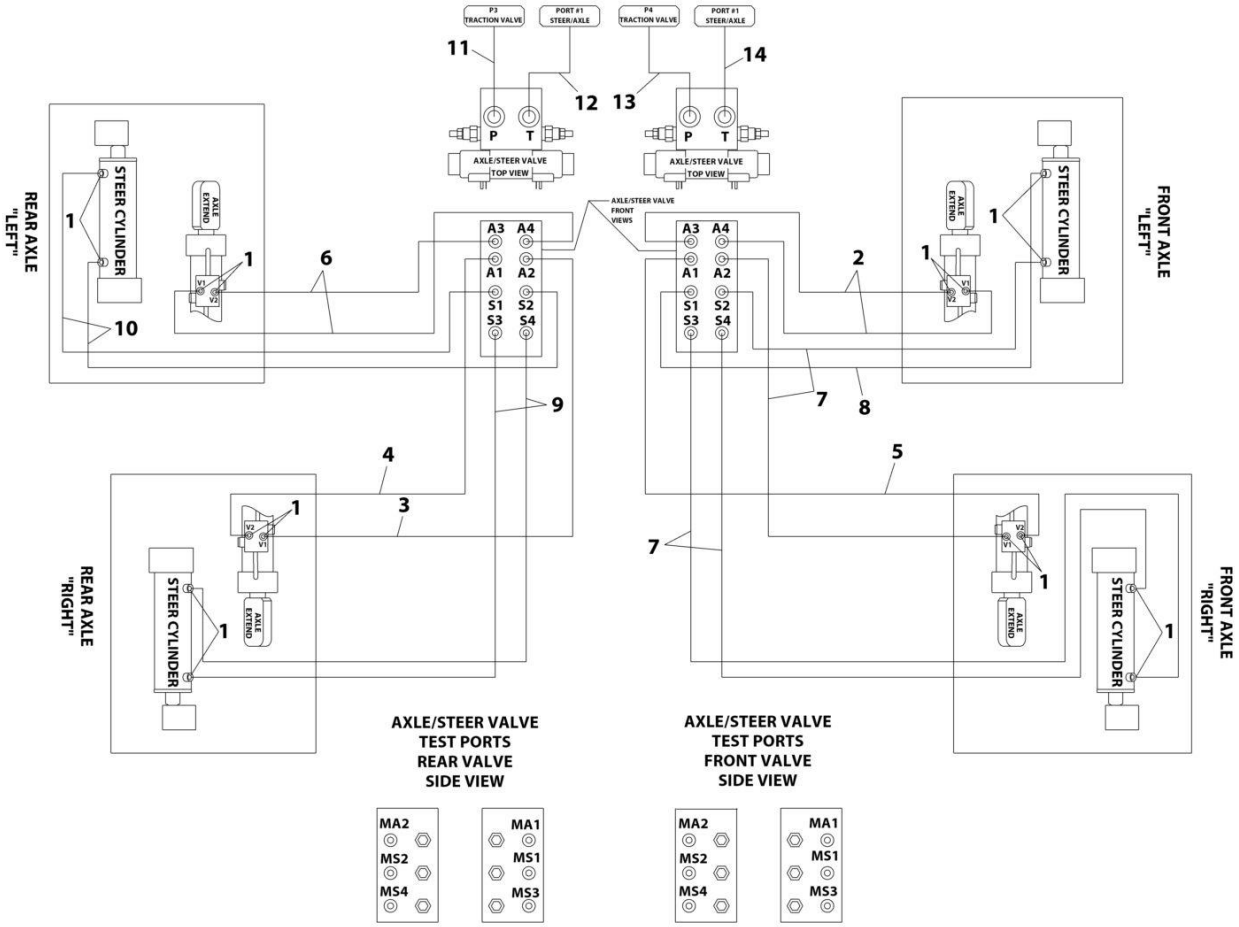

ART_2792773

FIGURE 7-5. HYDRAULIC DIAGRAM - STEER

ITEM	PART NUMBER	QTY	DESCRIPTION	REV
	1283457	Ref	HYDRAULIC DIAGRAM - STEER	L
	2792773	Ref	Hydraulic Diagram - Steer	2
1	2130606	16	Fitting, 90 ORFS/ORB	
2	2753732	2	Hose	
3	2753733	1	Hose	
4	2753728	1	Hose	
5	2753734	1	Hose	
6	2753735	2	Hose	
7	2753736	4	Hose	
8	2753737	1	Hose	
9	2753738	2	Hose	
10	2753739	2	Hose	
11	2753753	1	Hose	
12	2753742	1	Hose	
13	2753754	1	Hose	
14	2753743	1	Hose	

FIGURE 7-6. HYDRAULIC DIAGRAM - TURNTABLE (DEUTZ TD2011 ENGINES WITH REXROTH PUMPS)

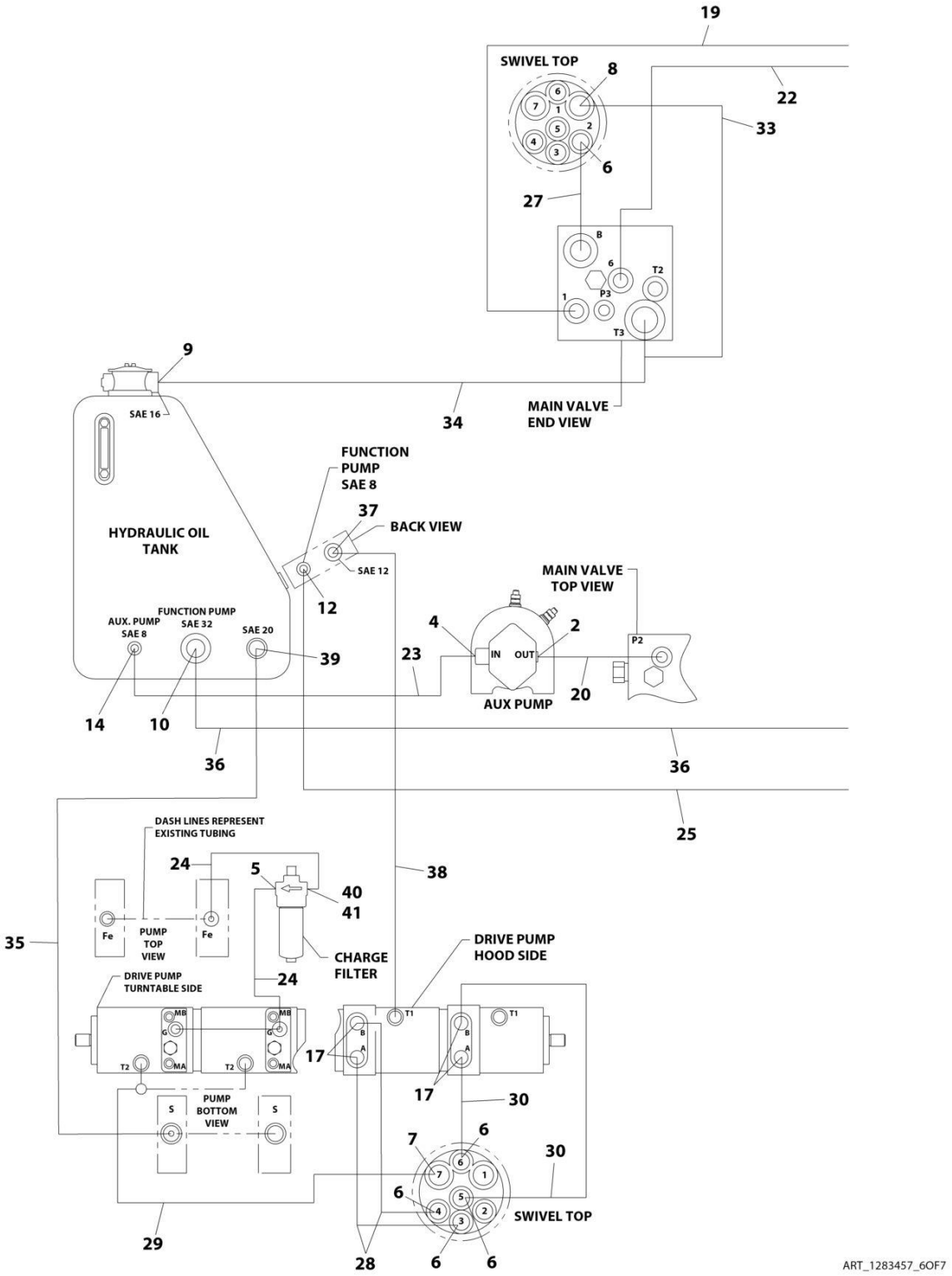

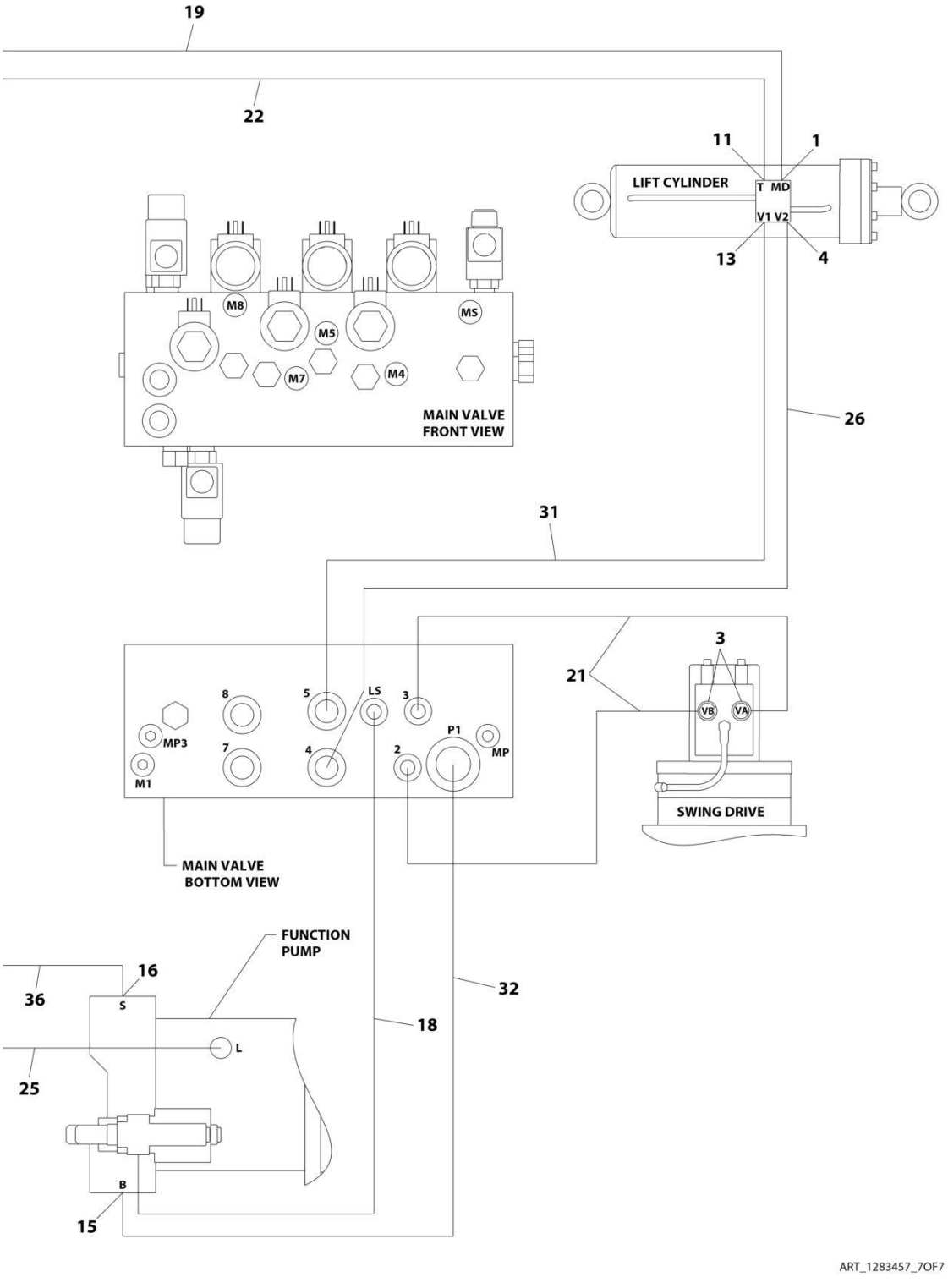
19
22
11
1
LIFT CYLINDER
T MD
V1 V2
13
4
M8
M5
M7
M4
MS
MAIN VALVE
FRONT VIEW
26
31
3
21
VB
VA
SWING DRIVE
8
5
LS
3
P1
MP3
7
4
2
MP
M1
MAIN VALVE
BOTTOM VIEW
FUNCTION
PUMP
16
36
S
32
18
L
25
B
15
ART_1283457_7OF7

FIGURE 7-6. HYDRAULIC DIAGRAM - TURNTABLE (DEUTZ TD2011 ENGINES WITH REXROTH PUMPS)

ITEM	PART NUMBER	QTY	DESCRIPTION	REV
	1283457	Ref	HYDRAULIC DIAGRAM - TURNTABLE (DEUTZ TD2011 ENGINES WITH REXROTH PUMPS)	L
	1001114620	Ref	Hydraulic Diagram - Turntable	B
1	2110404	1	Fitting, Straight ORFS/ORB	
2	2110608	1	Fitting, Straight ORFS/ORB	
3	2110610	2	Fitting, Straight ORFS/ORB	
4	2110810	2	Fitting, Straight ORFS/ORB	
5	2110812	1	Fitting, Straight ORFS/ORB	
6	2111010	5	Fitting, Straight ORFS/ORB	
7	2111012	1	Fitting, Straight ORFS/ORB	
8	2111212	1	Fitting, Straight ORFS/ORB	
9	2111616	1	Fitting, Straight ORFS/ORB	
10	2113232	1	Fitting, Straight ORFS/ORB	
11	2130606	1	Fitting, 90 ORFS/ORB	
12	2130808	1	Fitting, 90 ORFS/ORB	
13	2131010	1	Fitting, 90 ORFS/ORB	
14	2150808	1	Fitting, 45 ORFS/ORB	
15	2220478	1	Flange Kit	
16	2220737	1	Flange Kit	
17	2221117	4	Flange Kit	
18	1001213385	1	Hose	
19	2753718	1	Hose	
20	2753730	1	Hose	
21	2753731	2	Hose	
22	2753734	1	Hose	
23	2753758	1	Hose	
24	2753746	2	Hose	
25	2753741	1	Hose	
26	2753744	1	Hose	
27	2753766	1	Hose	
28	2753769	2	Hose	
29	2753708	1	Hose	
30	2753770	2	Hose	
31	2753765	1	Hose	
32	2753771	1	Hose	
33	2753772	1	Hose	
34	2753774	1	Hose	
35	2753775	1	Hose	
36	2753776	1	Hose	
37	2131212	1	Fitting, 90 ORFS/ORB	
38	2753773	1	Hose	
39	2112020	1	Fitting, Straight ORFS/ORB	
40	2221084	1	Fitting, Tee ORFS/ORFS/ORB	
41	2170908	1	Fitting, Cap ORFS	

FIGURE 7-7. HYDRAULIC DIAGRAM - TURNTABLE (DEUTZ TCD2.9L4 ENGINES AND DEUTZ TCD2.9L4 (STAGE V) ENGINES WITH REXROTH PUMPS)

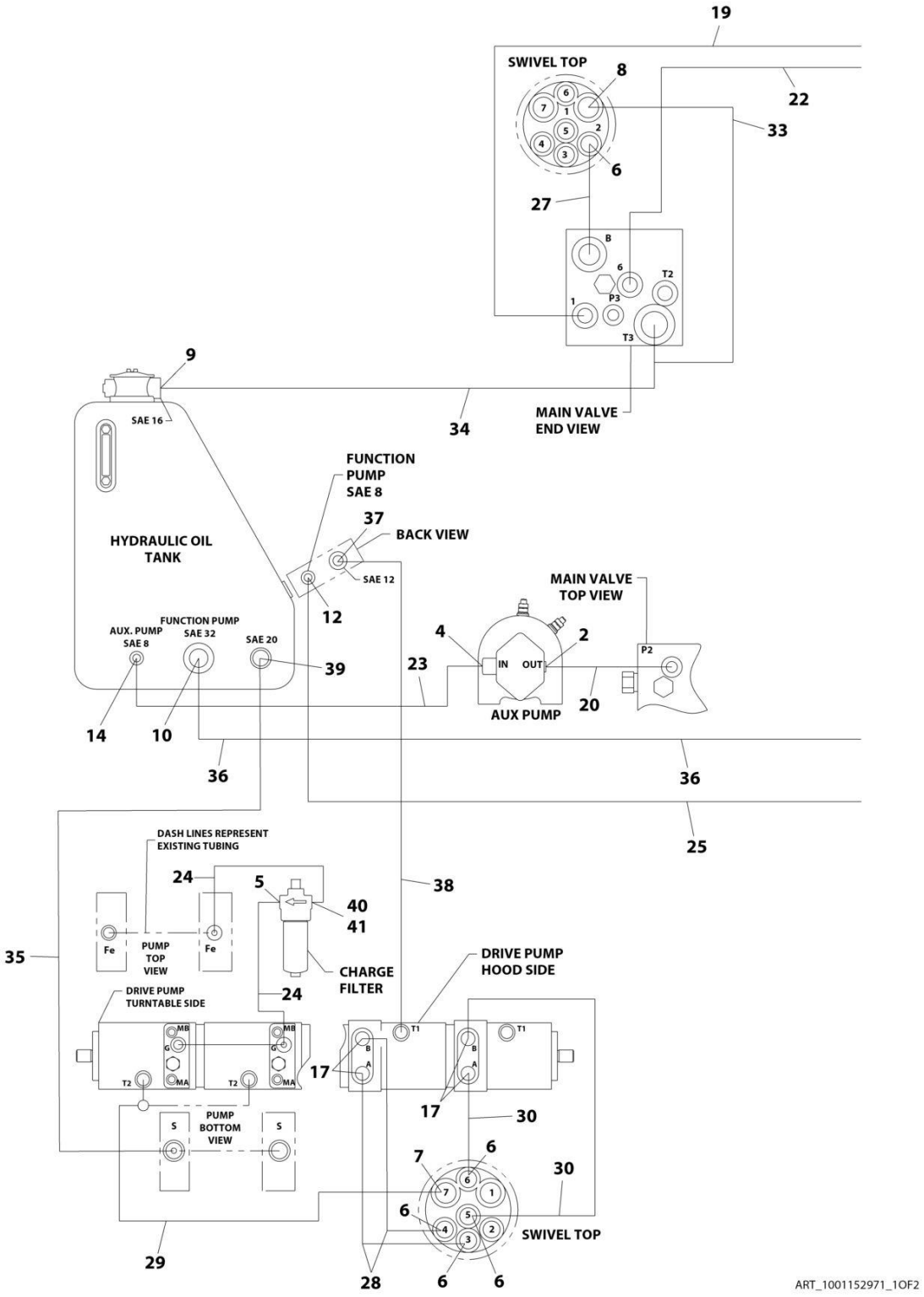

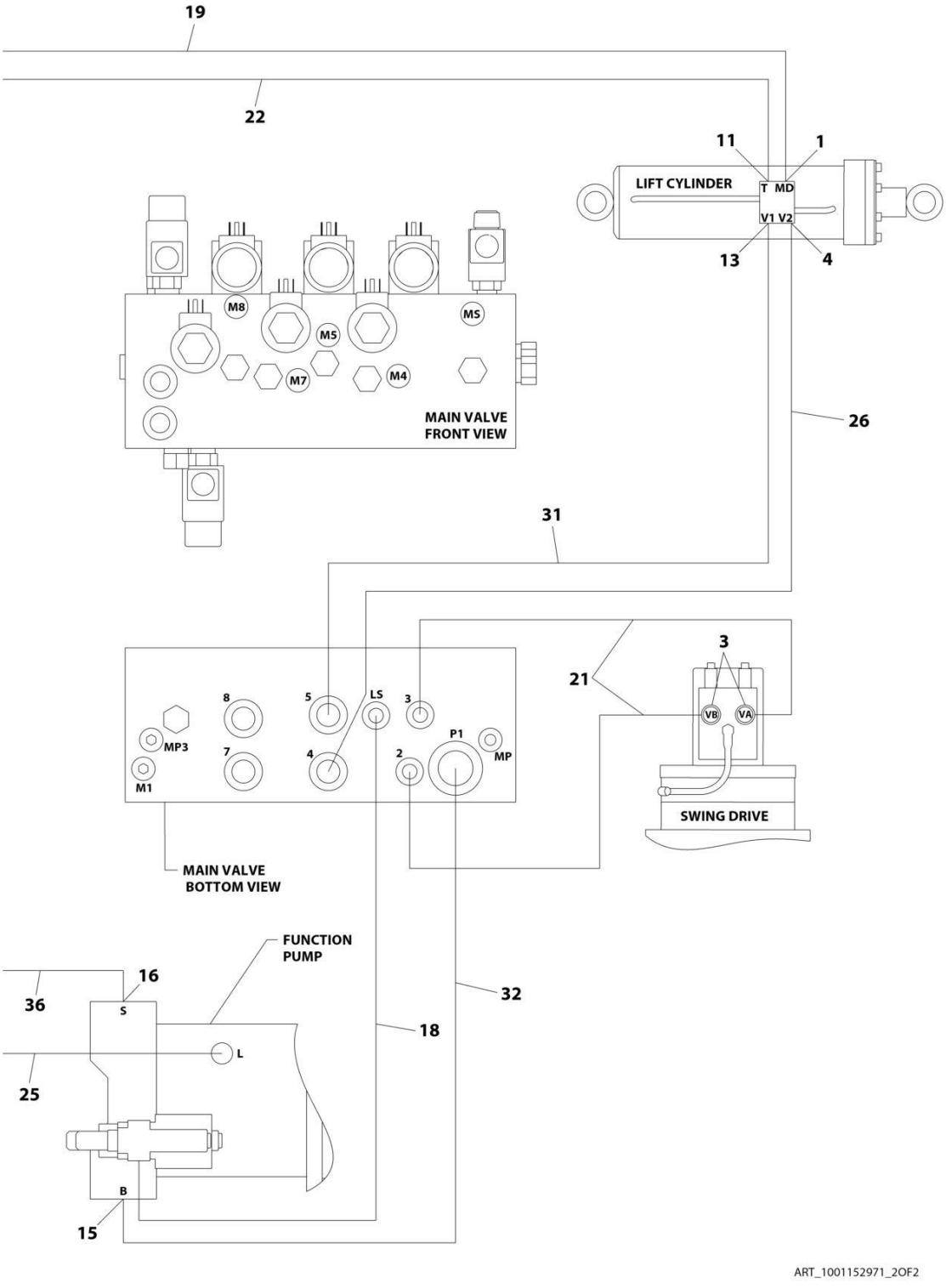
19
22
11
1
LIFT CYLINDER
T MD
V1 V2
13
4
M8
M5
M7
M4
MS
MAIN VALVE
FRONT VIEW
26
31
3
21
VB
VA
SWING DRIVE
8
5
LS
3
MP3
7
4
2
P1
MP
M1
MAIN VALVE
BOTTOM VIEW
FUNCTION
PUMP
16
36
S
32
18
L
25
B
15
ART_1001152971_2OF2

FIGURE 7-7. HYDRAULIC DIAGRAM - TURNTABLE (DEUTZ TCD2.9L4 ENGINES AND DEUTZ TCD2.9L4 (STAGE V) ENGINES WITH REXROTH PUMPS)

ITEM	PART NUMBER	QTY	DESCRIPTION	REV
	1001152971	Ref	HYDRAULIC DIAGRAM - TURNTABLE (DEUTZ TCD2.9L4 ENGINES AND DEUTZ TCD2.9L4 (STAGE V) ENGINES WITH REXROTH PUMPS)	C
	1001152968	Ref	Hydraulic Diagram - Turntable	B
1	2110404	1	Fitting, Straight ORFS/ORB	
2	2110608	1	Fitting, Straight ORFS/ORB	
3	2110610	2	Fitting, Straight ORFS/ORB	
4	2110810	2	Fitting, Straight ORFS/ORB	
5	2110812	1	Fitting, Straight ORFS/ORB	
6	2111010	5	Fitting, Straight ORFS/ORB	
7	2111012	1	Fitting, Straight ORFS/ORB	
8	2111212	1	Fitting, Straight ORFS/ORB	
9	2111616	1	Fitting, Straight ORFS/ORB	
10	2113232	1	Fitting, Straight ORFS/ORB	
11	2130606	1	Fitting, 90 ORFS/ORB	
12	2130808	1	Fitting, 90 ORFS/ORB	
13	2131010	1	Fitting, 90 ORFS/ORB	
14	2150808	1	Fitting, 45 ORFS/ORB	
15	2220478	1	Flange Kit	
16	2220737	1	Flange Kit	
17	2221117	4	Flange Kit	
18	1001213385	1	Hose	
19	2753718	1	Hose	
20	2753730	1	Hose	
21	2753731	2	Hose	
22	2753734	1	Hose	
23	2753758	1	Hose	
24	2753746	2	Hose	
25	2753741	1	Hose	
26	2753744	1	Hose	
27	2753766	1	Hose	
28	2753769	2	Hose	
29	2753708	1	Hose	
30	2753770	2	Hose	
31	2753765	1	Hose	
32	2753771	1	Hose	
33	2753772	1	Hose	
34	2753774	1	Hose	
35	1001152966	1	Hose	
36	2753776	1	Hose	
37	2131212	1	Fitting, 90 ORFS/ORB	
38	2753773	1	Hose	
39	2112020	1	Fitting, Straight ORFS/ORB	
40	2221084	1	Fitting, Tee ORFS/ORFS/ORB	
41	2170908	1	Fitting, Cap ORFS	

FIGURE 7-8. HYDRAULIC DIAGRAM - TURNTABLE (WITH SAUER PUMPS)

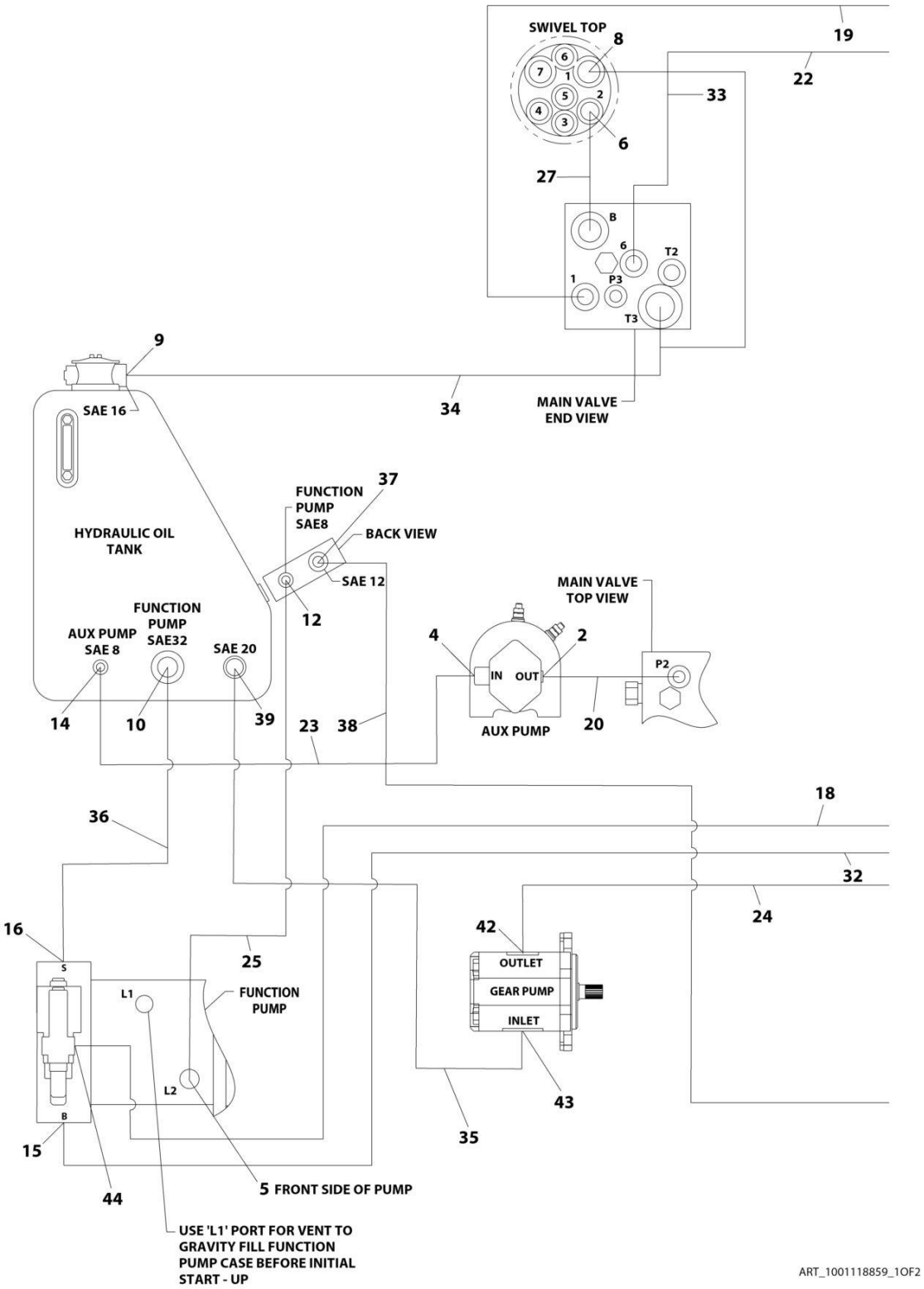

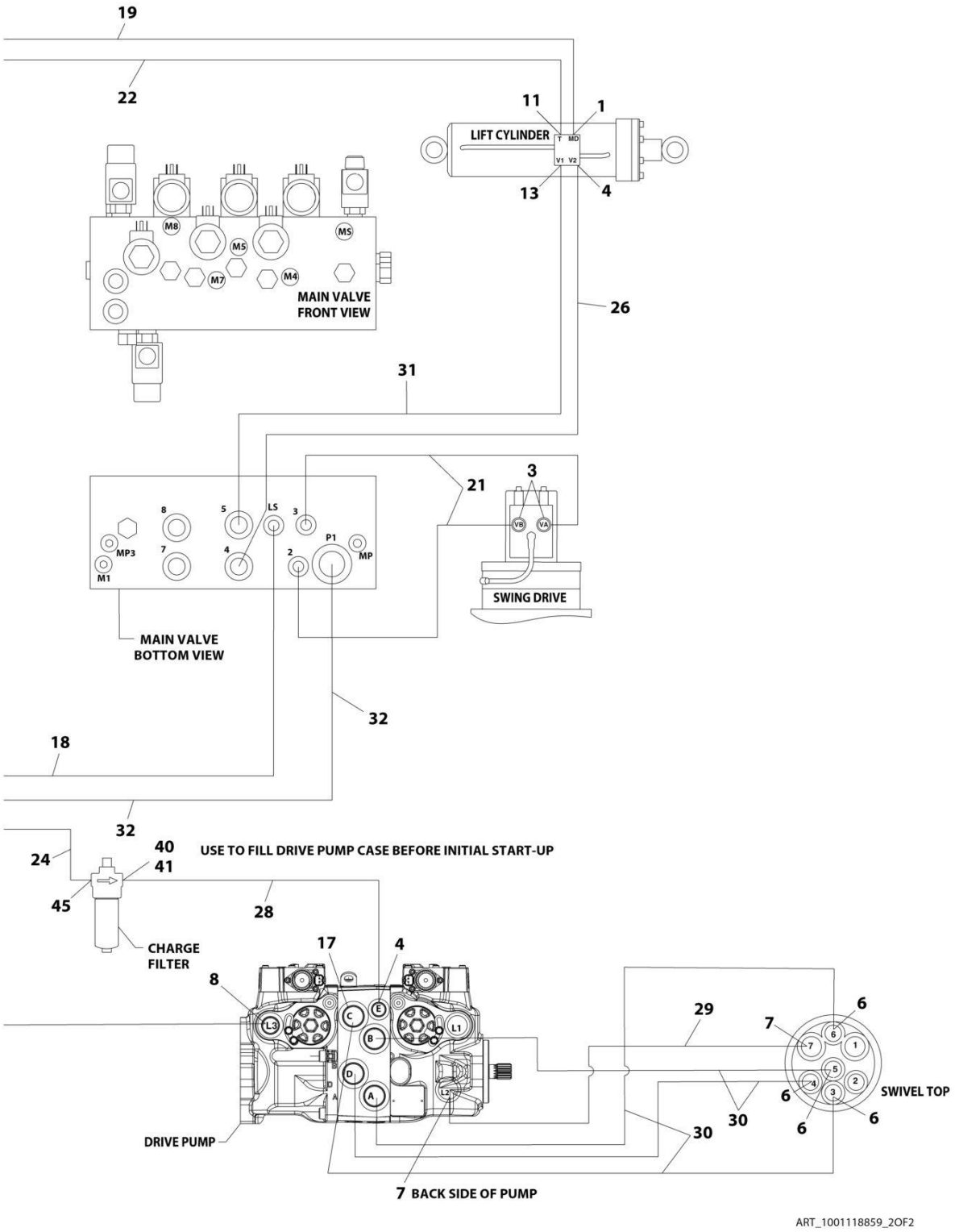

ART_1001118859_2OF2

FIGURE 7-8. HYDRAULIC DIAGRAM - TURNTABLE (WITH SAUER PUMPS)

ITEM	PART NUMBER	QTY	DESCRIPTION	REV
	1001118859	Ref	HYDRAULIC DIAGRAM - TURNTABLE (WITH SAUER PUMPS)	D
	1001118869	Ref	Hydraulic Diagram - Turntable	B
1	2110404	1	Fitting, Straight ORFS/ORB	
2	2110608	1	Fitting, Straight ORFS/ORB	
3	2110610	2	Fitting, Straight ORFS/ORB	
4	2110810	3	Fitting, Straight ORFS/ORB	
5	2130810	1	Fitting, 90 ORFS/ORB	
6	2111010	5	Fitting, Straight ORFS/ORB	
7	2111012	2	Fitting, Straight ORFS/ORB	
8	2111212	2	Fitting, Straight ORFS/ORB	
9	2111616	1	Fitting, Straight ORFS/ORB	
10	2113232	1	Fitting, Straight ORFS/ORB	
11	2130606	1	Fitting, 90 ORFS/ORB	
12	2130808	1	Fitting, 90 ORFS/ORB	
13	2131010	1	Fitting, 90 ORFS/ORB	
14	2150808	1	Fitting, 45 ORFS/ORB	
15	2220478	1	Flange Kit	
16	1001110604	1	Flange Kit	
17	2111016	4	Fitting, Straight ORFS/ORB	
18	1001213385	1	Hose	
19	2753718	1	Hose	
20	2753730	1	Hose	
21	2753731	2	Hose	
22	2753734	1	Hose	
23	2753758	1	Hose	
24	2753746	1	Hose	
25	1001118934	1	Hose	
26	2753744	1	Hose	
27	2753766	1	Hose	
28	1001118933	1	Hose	
29	2753708	1	Hose	
30	1001109468	4	Hose	
31	2753765	1	Hose	
32	2753771	1	Hose	
33	2753772	1	Hose	
34	2753774	1	Hose	
35	1001119817	1	Hose	
36	1001118935	1	Hose	
37	2131612	1	Fitting, 90 ORFS/ORB	
38	1001119138	1	Hose	
39	2112020	1	Fitting, Straight ORFS/ORB	
40	2221084	1	Fitting, Tee ORFS/ORFS/ORB	
41	2170908	1	Fitting, Cap ORFS	
42	2110812	1	Fitting, Straight ORFS/ORB	
43	2112016	1	Fitting, Straight ORFS/ORB	
44	2130404	1	Fitting, 90 ORFS/ORB	
45	2130812	1	Fitting, 90 ORFS/ORB	

FIGURE 7-9. HYDRAULIC DIAGRAM - TURNTABLE (WITH PMP PUMPS)

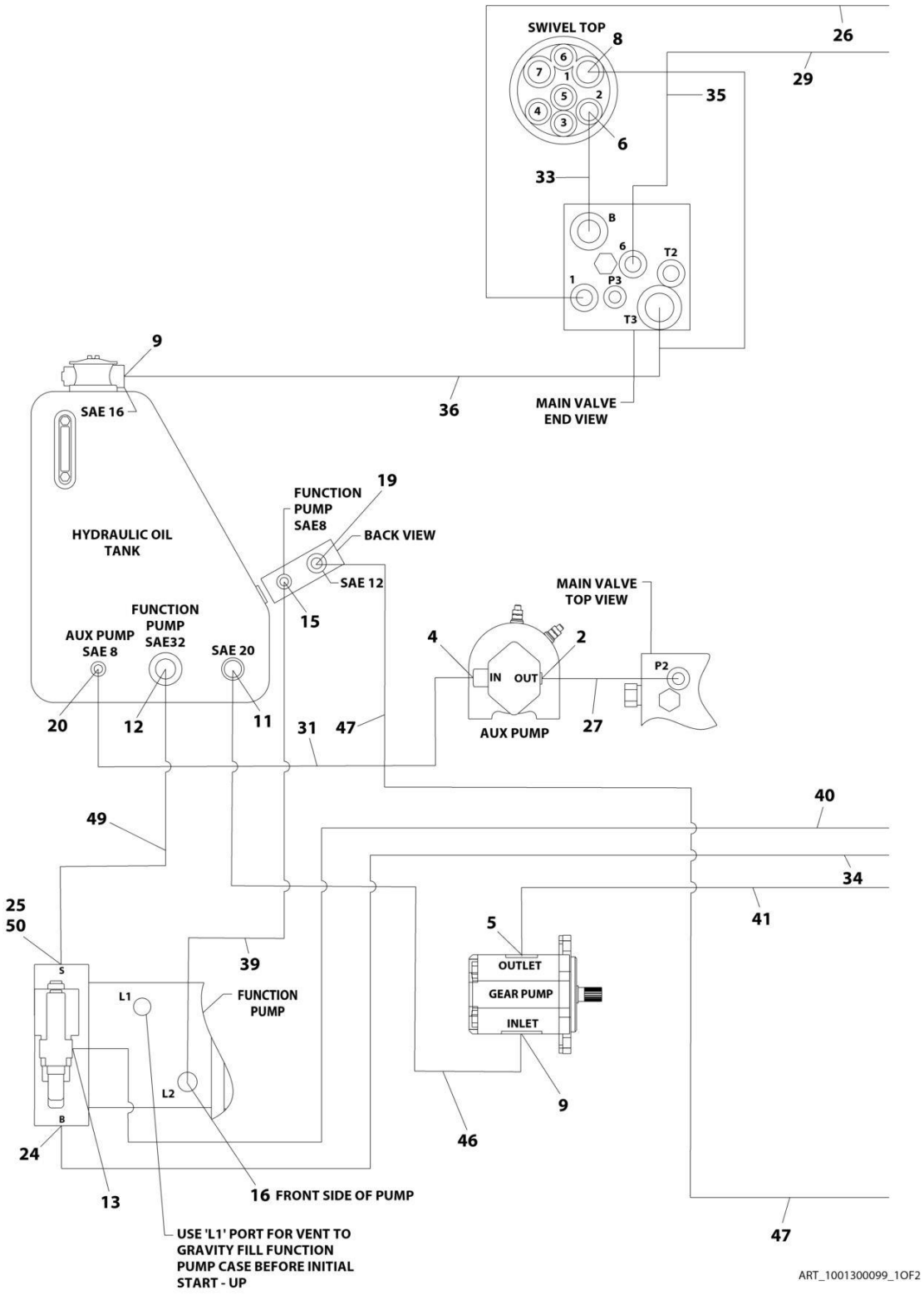

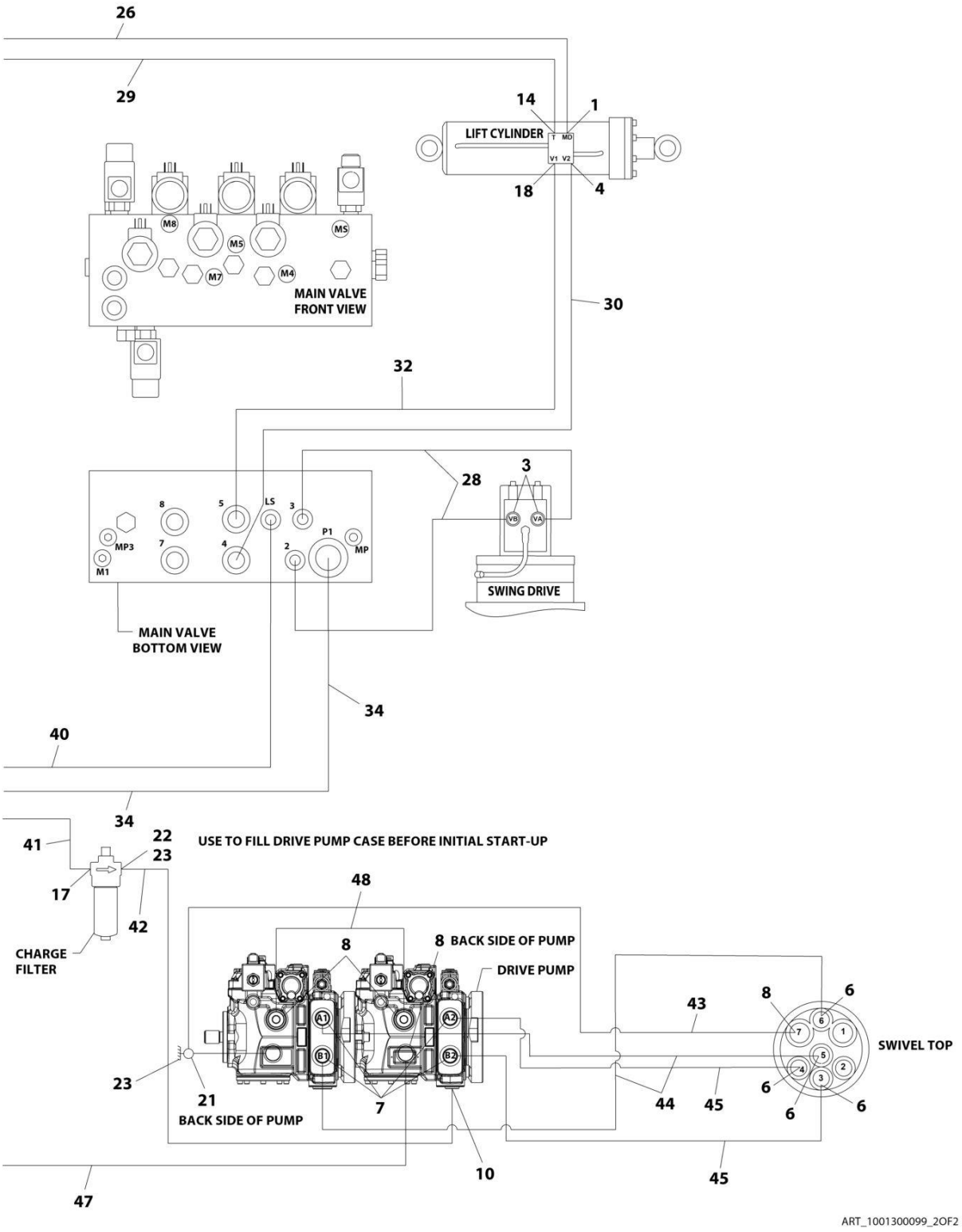
26
29
14
1
LIFT CYLINDER
T MD
V1 V2
18
4
M8
M5
M5
M7
M4
MAIN VALVE
FRONT VIEW
30
32
28
3
8
5
LS
3
P1
MP3
7
4
2
MP
M1
VB
VA
SWING DRIVE
MAIN VALVE
BOTTOM VIEW
34
40
34
41
22
23
USE TO FILL DRIVE PUMP CASE BEFORE INITIAL START-UP
17
42
CHARGE
FILTER
48
8
8
BACK SIDE OF PUMP
DRIVE PUMP
A1
A2
B1
B2
43
8
6
SWIVEL TOP
23
21
BACK SIDE OF PUMP
7
44
45
6
6
6
10
45
47
ART_1001300099_2OF2

FIGURE 7-9. HYDRAULIC DIAGRAM - TURNTABLE (WITH PMP PUMPS)

ITEM	PART NUMBER	QTY	DESCRIPTION	REV
	1001300099	Ref	HYDRAULIC DIAGRAM - TURNTABLE (WITH PMP PUMPS)	A
1	2110404	1	Fitting, Straight ORFS/ORB	
2	2110608	1	Fitting, Straight ORFS/ORB	
3	2110610	2	Fitting, Straight ORFS/ORB	
4	2110810	2	Fitting, Straight ORFS/ORB	
5	2110812	1	Fitting, Straight ORFS/ORB	
6	2111010	5	Fitting, Straight ORFS/ORB	
7	2111012	4	Fitting, Straight ORFS/ORB	
8	2111212	5	Fitting, Straight ORFS/ORB	
9	2111616	2	Fitting, Straight ORFS/ORB	
10	2111620	1	Fitting, Straight ORFS/ORB	
11	2112020	1	Fitting, Straight ORFS/ORB	
12	2113232	1	Fitting, Straight ORFS/ORB	
13	2130404	1	Fitting, 90 ORFS/ORB	
14	2130606	1	Fitting, 90 ORFS/ORB	
15	2130808	1	Fitting, 90 ORFS/ORB	
17	2130812	1	Fitting, 90 ORFS/ORB	
18	2131010	1	Fitting, 90 ORFS/ORB	
19	2131612	1	Fitting, 90 ORFS/ORB	
20	2150808	1	Fitting, 45 ORFS/ORB	
21	2170312	1	Fitting, Tee ORFS/ORB/ORFS	
22	2170412	1	Fitting, Tee ORFS/ORFS/ORB	
23	2170912	2	Fitting, Cap FORFS	
24	2220478	1	Flange Kit	
25	2220737	1	Flange Kit	
26	2753718	1	Hose	
27	2753730	1	Hose	
28	2753731	2	Hose	
29	2753734	1	Hose	
30	2753744	1	Hose	
31	2753758	1	Hose	
32	2753765	1	Hose	
33	2753766	1	Hose	
34	2753771	1	Hose	
35	2753772	1	Hose	
36	2753774	1	Hose	
37	4061032	1	Hose (Not Shown)	
38	4240018	2	Tie-Strap (Not Shown)	
39	1001118934	1	Hose	
40	1001213385	1	Hose	
41	1001297564	1	Hose	
42	1001297565	1	Hose	
43	1001297566	1	Hose	
44	1001297567	2	Hose	
45	1001297568	2	Hose	
46	1001297569	1	Hose	
47	1001297570	1	Hose	
48	1001297571	1	Hose	
49	1001297572	1	Hose	
50	1001297601	1	Hose	

SECTION 8 - ELECTRICAL

FIGURE 8-1. AC BOX AT PLATFORM - 110V (ANSI SPECS)

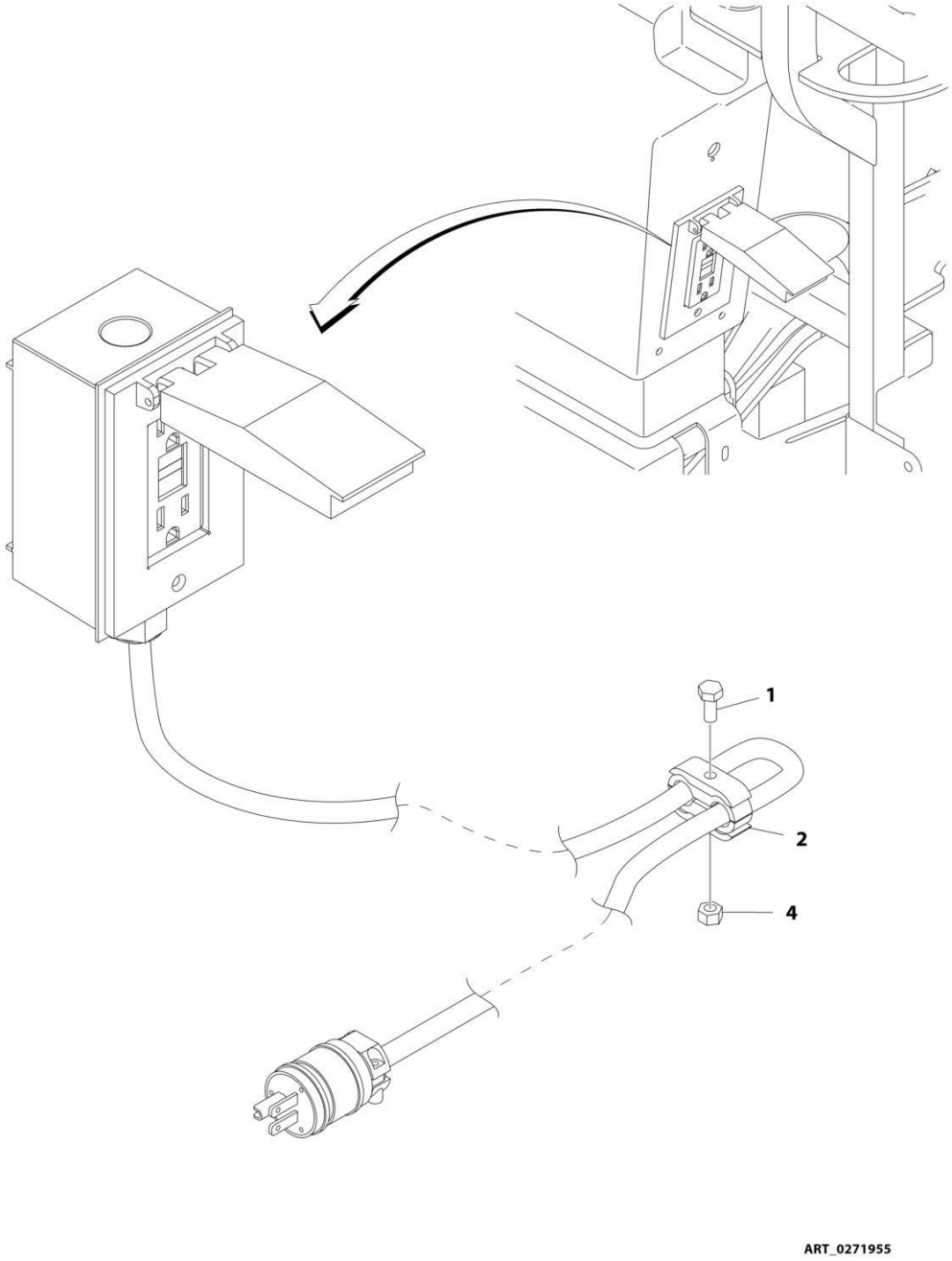

FIGURE 8-1. AC BOX AT PLATFORM - 110V (ANSI SPECS)

ITEM	PART NUMBER	QTY	DESCRIPTION	REV
	0271955	Ref	AC BOX AT PLATFORM - 110V	C
1	0641416	1	Bolt 1/4 x 2	
2	1320146	1	Clamp	
4	3311405	1	Nut 1/4	

FIGURE 8-2. AC BOX AT PLATFORM - 110V GFI RECEPTACLE (ANSI, CSA AND JAPANESE SPECS)

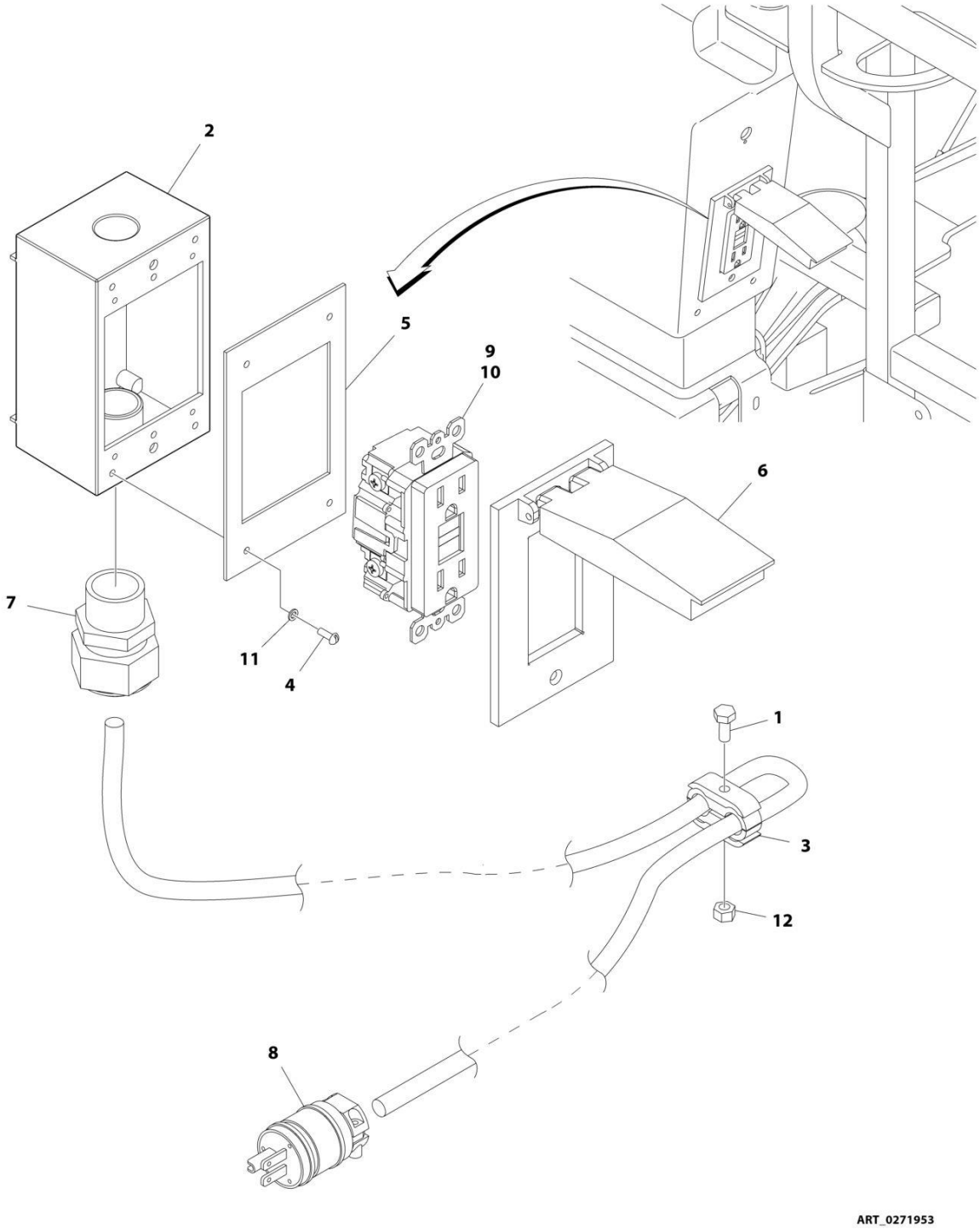

FIGURE 8-2. AC BOX AT PLATFORM - 110V GFI RECEPTACLE (ANSI, CSA AND JAPANESE SPECS)

ITEM	PART NUMBER	QTY	DESCRIPTION	REV
	0271953	Ref	AC BOX AT PLATFORM - 110V GFI RECEPTACLE	D
1	0641416	1	Bolt 1/4 x 2	
2	0860038	1	Box, Switch	
3	1320146	1	Clamp	
4	3910606	4	Screw 6 x 3/8	
5	3960422	1	Gasket, AC Receptacle	
6	1001110873	1	Shield, Receptacle Cover	
7	4460051	1	Connector, Strain Relief	
8	4460205	1	Plug, Male	
9	4460315	1	Terminal, Spade	
10	4460346	1	Terminal, Receptacle	
11	4760600	4	Washer 6	
12	3311405	1	Nut 1/4	

FIGURE 8-3. AC BOX AT PLATFORM - 220V GFI RECEPTACLE (ANSI, CSA AND JAPANESE SPECS)

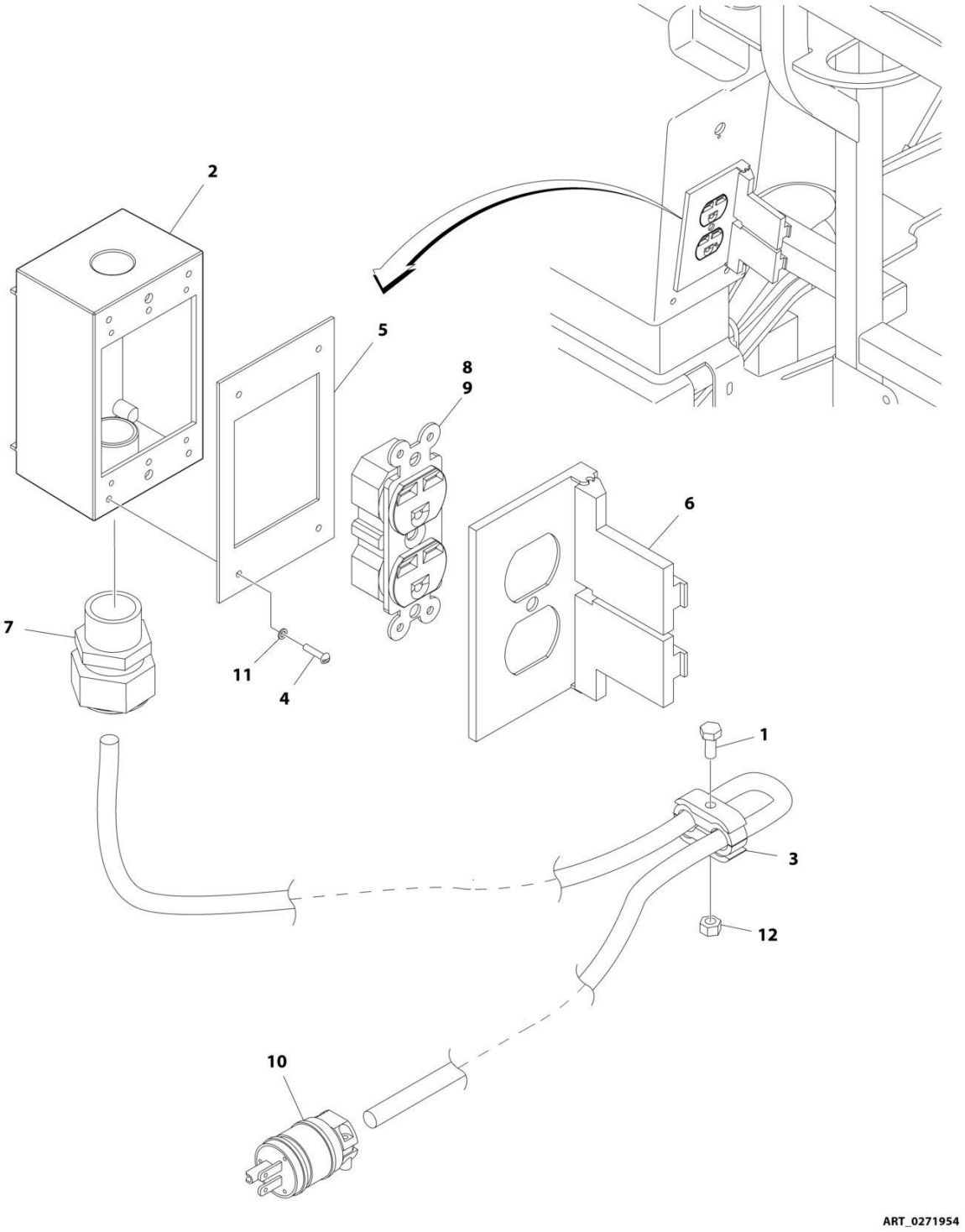

FIGURE 8-3. AC BOX AT PLATFORM - 220V GFI RECEPTACLE (ANSI, CSA AND JAPANESE SPECS)

ITEM	PART NUMBER	QTY	DESCRIPTION	REV
	0271954	Ref	AC BOX AT PLATFORM - 220V GFI RECEPTACLE	C
1	0641416	1	Bolt 1/4 x 2	
2	0860038	1	Box, Switch	
3	1320146	1	Clamp	
4	3910606	4	Screw 6 x 3/8	
5	3960422	1	Gasket, AC Receptacle	
6	4060092	1	Shield, Receptacle Cover	
7	4460051	1	Connector, Strain Relief	
8	4460125	1	Terminal, Receptacle	
9	4460315	1	Terminal, Spade	
10	4460709	1	Plug, Male	
11	4760600	4	Washer 6	
12	3311405	1	Nut 1/4	

FIGURE 8-4. AC BOX AT PLATFORM INSTALLATION - BOX WITH COVER (2X4 BOX) WITH 4000W GENERATOR (AUSTRALIAN SPECS)

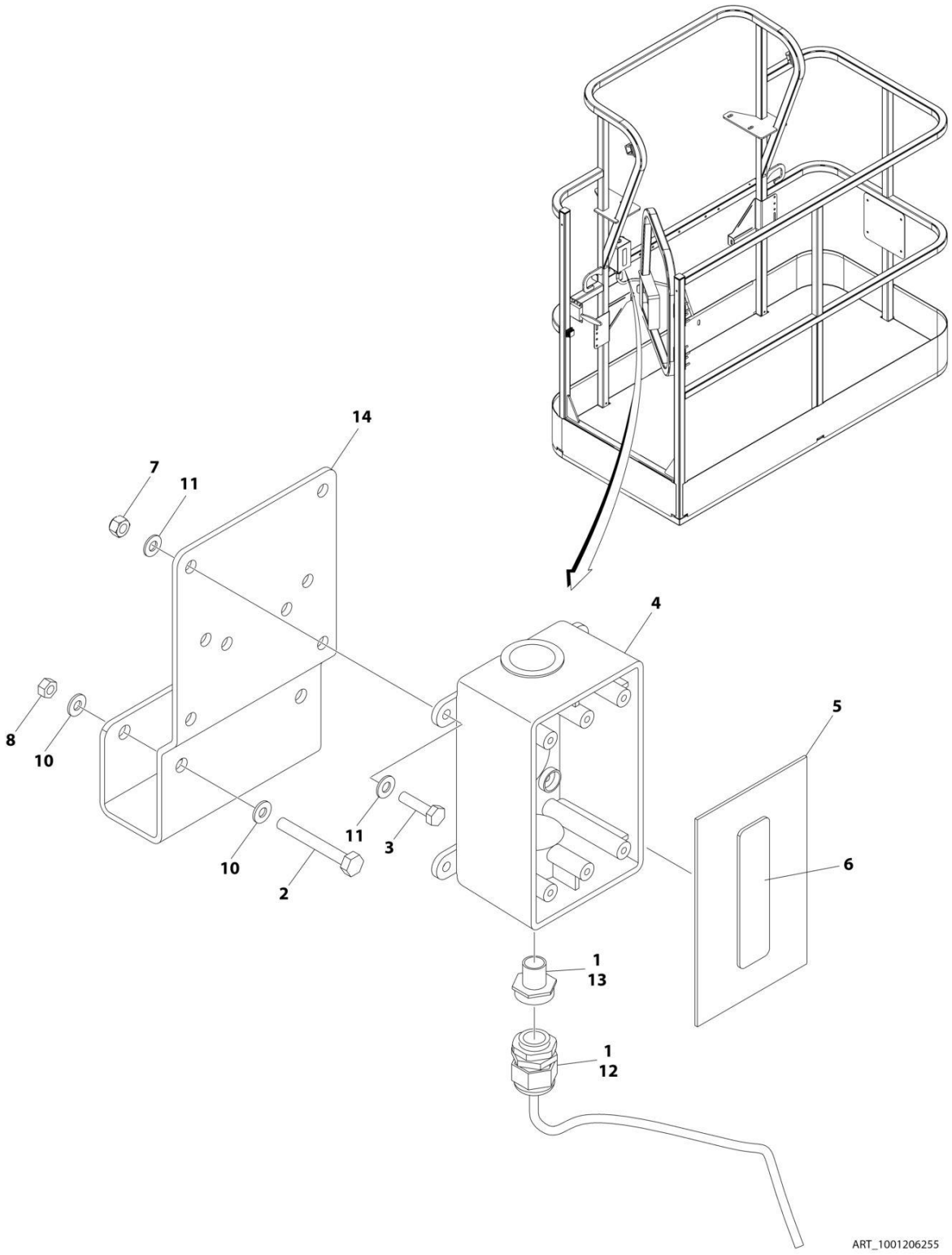

FIGURE 8-4. AC BOX AT PLATFORM INSTALLATION - BOX WITH COVER (2X4 BOX) WITH 4000W GENERATOR (AUSTRALIAN SPECS)

ITEM	PART NUMBER	QTY	DESCRIPTION	REV
	1001206255	Ref	AC BOX AT PLATFORM INSTALLATION - BOX WITH COVER (2X4 BOX) WITH 4000W GENERATOR	A
1	0100020	AR	Sealant, Pipe	
2	0641416	2	Bolt 1/4 x 2	
3	0700408	4	Bolt M4 x 16	
4	0861731	1	Box, Switch	
5	1670603	1	Cover	
6	3251242	1	Decal - 240V-50Hz	
7	3290405	4	Nut M4	
8	3311405	2	Nut 1/4	
10	4711400	4	Washer 1/4	
11	4811400	8	Washer M4	
12	1001101191	1	Connector, Strain Relief	
13	1001101197	1	Adapter	
14	1001193018	1	Bracket, AC Receptacle	

FIGURE 8-5. AC BOX AT PLATFORM INSTALLATION - 110V IEC 60309 YELLOW WITHOUT 2500W GENERATOR (CE & UK CA SPECS)

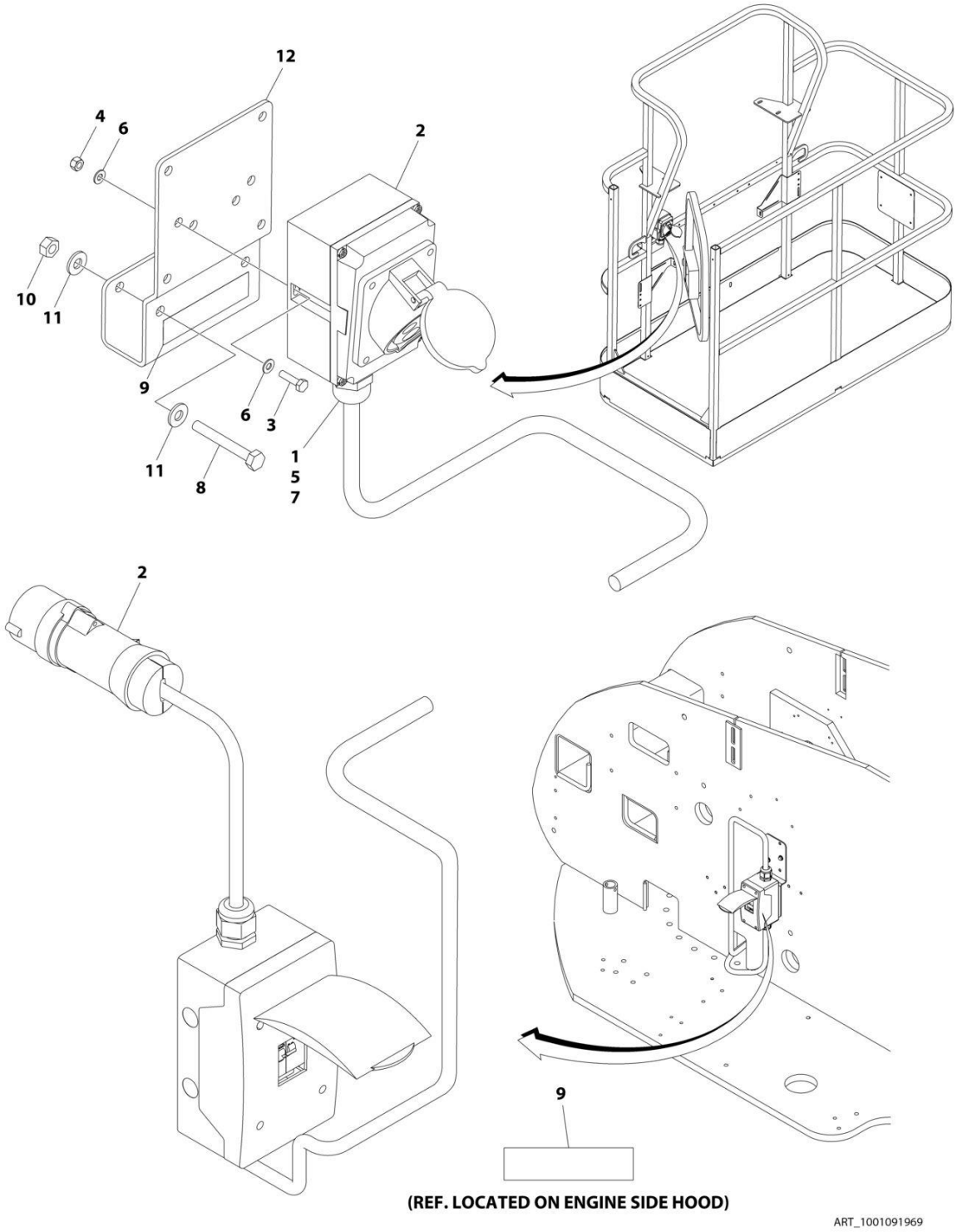

FIGURE 8-5. AC BOX AT PLATFORM INSTALLATION - 110V IEC 60309 YELLOW WITHOUT 2500W GENERATOR (CE & UK CA SPECS)

ITEM	PART NUMBER	QTY	DESCRIPTION	REV
	1001091969	Ref	AC BOX AT PLATFORM INSTALLATION - 110V IEC YELLOW	D
1	0100020	AR	Sealant, Pipe	
2	0275216	1	Receptacle Box Kit (See Separate Breakdown in this Section)	
3	0700408	2	Bolt M4 x 16	
4	3290405	2	Nut M4	
5	1001101196	1	Adapter	
6	4811400	4	Washer M4	
7	1001101191	1	Connector, Strain Relief	
8	0641416	2	Bolt 1/4 x 2	
9	1705325	2	Decal - 110V	
10	3311405	2	Nut 1/4	
11	4711400	4	Washer 1/4	
12	1001193018	1	Bracket	

FIGURE 8-6. AC BOX AT PLATFORM INSTALLATION - 110V IEC 60309 YELLOW WITHOUT 4000W GENERATOR (CE & UK CA SPECS)

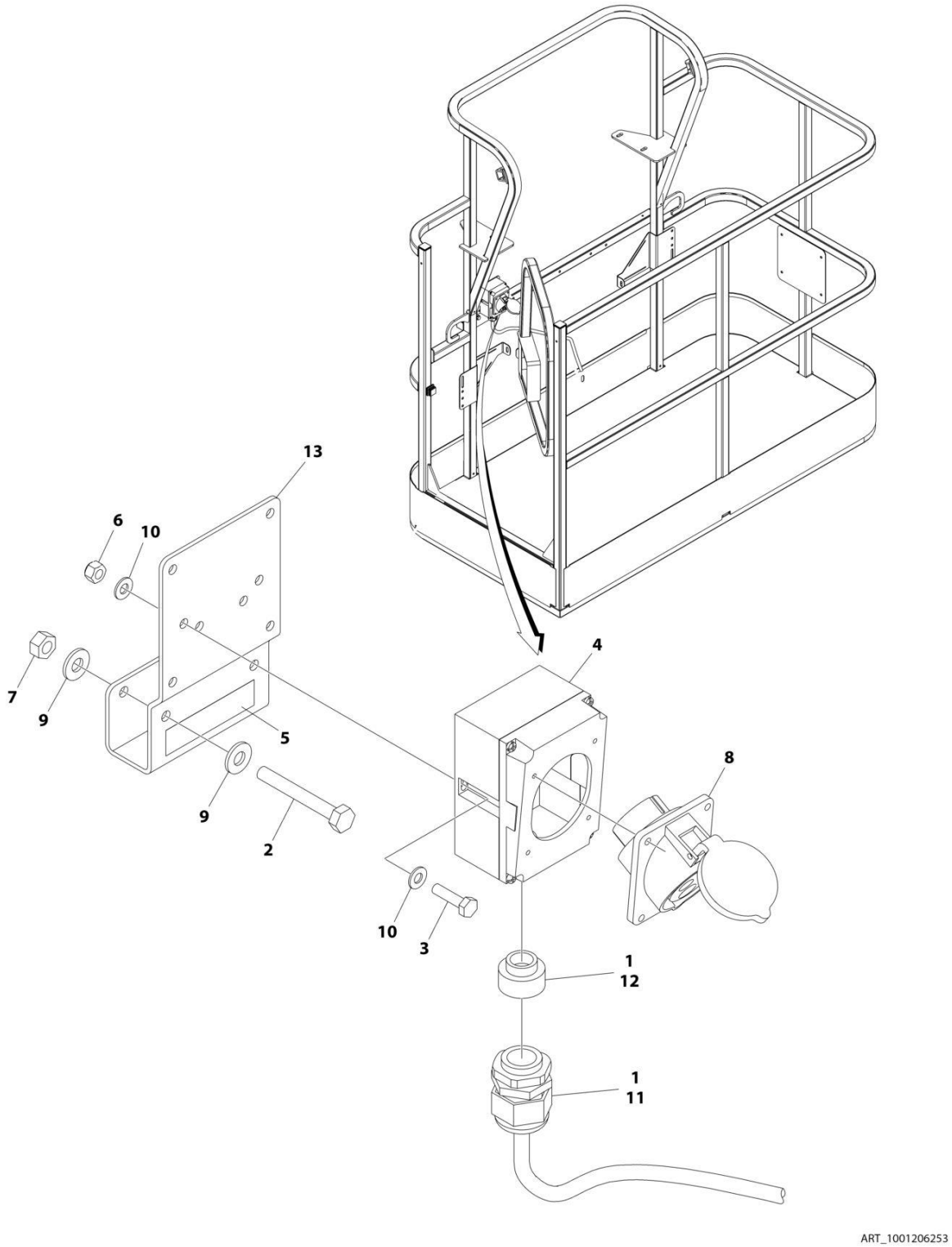

FIGURE 8-6. AC BOX AT PLATFORM INSTALLATION - 110V IEC 60309 YELLOW WITHOUT 4000W GENERATOR (CE & UK CA SPECS)

ITEM	PART NUMBER	QTY	DESCRIPTION	REV
	1001206253	Ref	AC BOX AT PLATFORM INSTALLATION - 110V IEC 60309 YELLOW WITHOUT 4000W GENERATOR	A
1	0100020	AR	Sealant, Pipe	
2	0641416	2	Bolt 1/4 x 2	
3	0700408	2	Bolt M4 x 16	
4	0861781	1	Box, Switch	
5	1705325	1	Decal - 110V	
6	3290405	2	Nut M4	
7	3311405	2	Nut 1/4	
8	4461198	1	Receptacle	
9	4711400	4	Washer 1/4	
10	4811400	4	Washer M4	
11	1001101191	1	Connector, Strain Relief	
12	1001101196	1	Adapter	
13	1001193018	1	Bracket, AC Receptacle	

FIGURE 8-7. AC BOX AT PLATFORM INSTALLATION - 220V IEC 60309 BLUE WITHOUT 2500W GENERATOR (CE & UK CA SPECS)

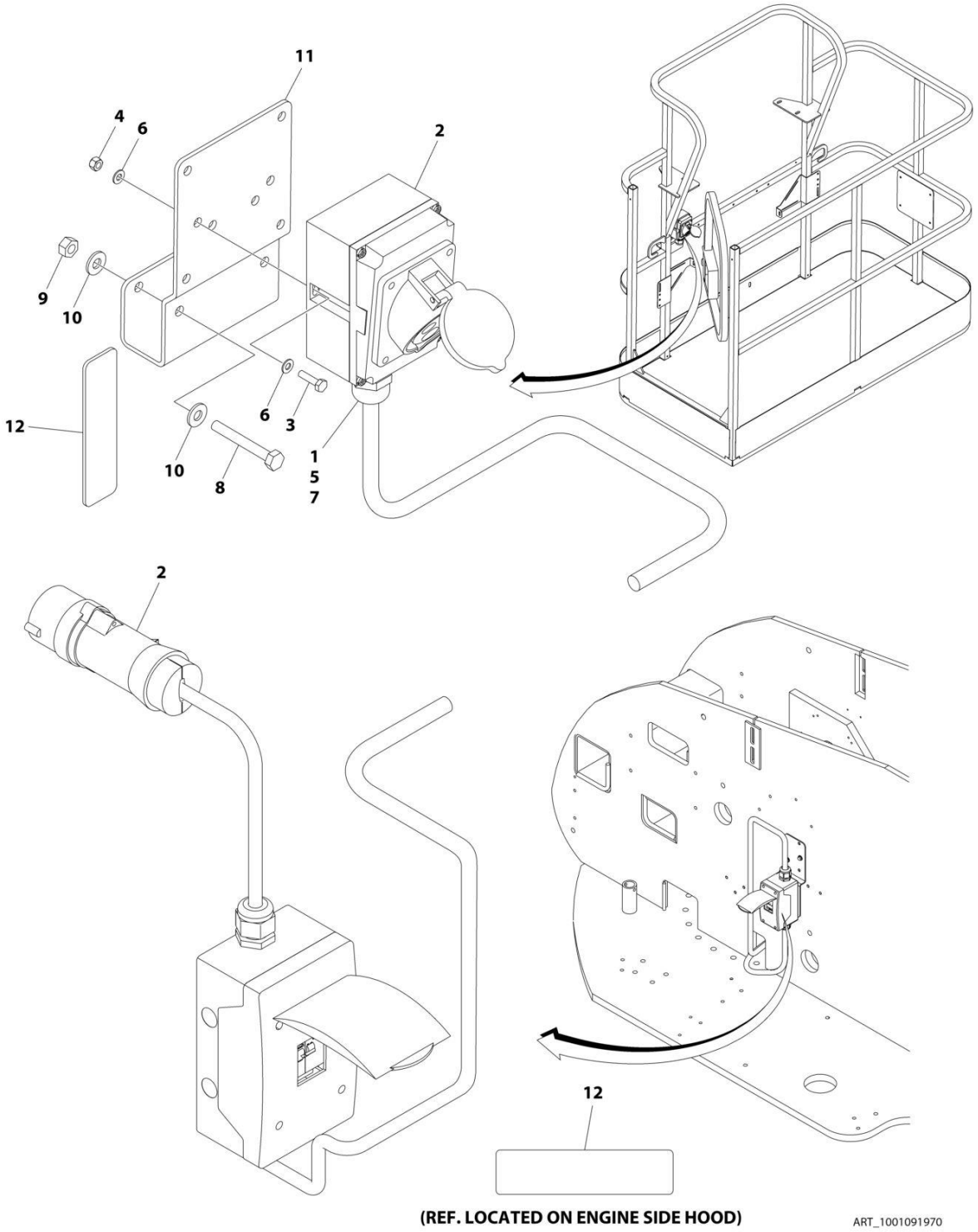

FIGURE 8-7. AC BOX AT PLATFORM INSTALLATION - 220V IEC 60309 BLUE WITHOUT 2500W GENERATOR (CE & UK CA SPECS)

ITEM	PART NUMBER	QTY	DESCRIPTION	REV
	1001091970	Ref	AC BOX AT PLATFORM INSTALLATION - 220V IEC BLUE	D
1	0100020	AR	Sealant, Pipe	
2	0275217	1	Receptacle Box Kit (See Separate Breakdown in this Section)	
3	0700408	2	Bolt M4 x 16	
4	3290405	2	Nut M4	
5	1001101196	1	Adapter	
6	4811400	4	Washer M4	
7	1001101191	1	Connector, Strain Relief	
8	0641416	2	Bolt 1/4 x 2	
9	3311405	2	Nut 1/4	
10	4711400	4	Washer 1/4	
11	1001193018	1	Bracket	
12	3251242	2	Decal - 240V/50Hz	

FIGURE 8-8. AC BOX AT PLATFORM INSTALLATION - 220V IEC 60309 BLUE WITHOUT 4000W GENERATOR (CE & UK CA SPECS)

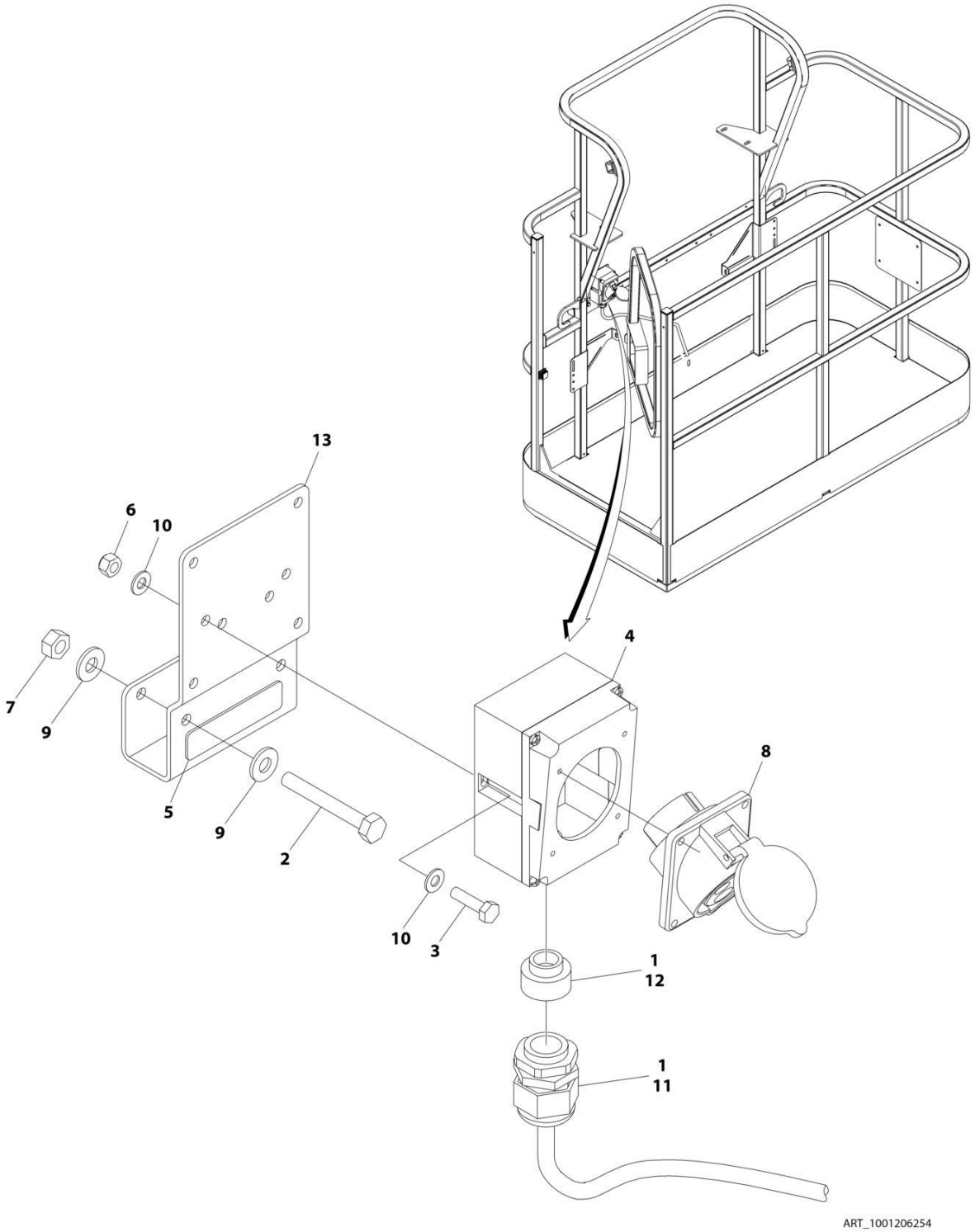

FIGURE 8-8. AC BOX AT PLATFORM INSTALLATION - 220V IEC 60309 BLUE WITHOUT 4000W GENERATOR (CE & UK CA SPECS)

ITEM	PART NUMBER	QTY	DESCRIPTION	REV
	1001206254	Ref	AC BOX AT PLATFORM INSTALLATION - 220V IEC BLUE	A
1	0100020	AR	Sealant, Pipe	
2	0641416	2	Bolt 1/4 x 2	
3	0700408	2	Bolt M4 x 16	
4	0861781	1	Box, Switch	
5	3251242	1	Decal - 240V/50Hz	
6	3290405	2	Nut M4	
7	3311405	2	Nut 1/4	
8	4461201	1	Receptacle	
9	4711400	4	Washer 1/4	
10	4811400	4	Washer M4	
11	1001101191	1	Connector, Strain Relief	
12	1001101196	1	Adapter	
13	1001193018	1	Bracket, AC Receptacle	

FIGURE 8-9. AC BOX AT PLATFORM INSTALLATION - 220V CEE7 POST GROUND (2X4 BOX) WITHOUT 2500W GENERATOR (CE & UK CA SPECS)

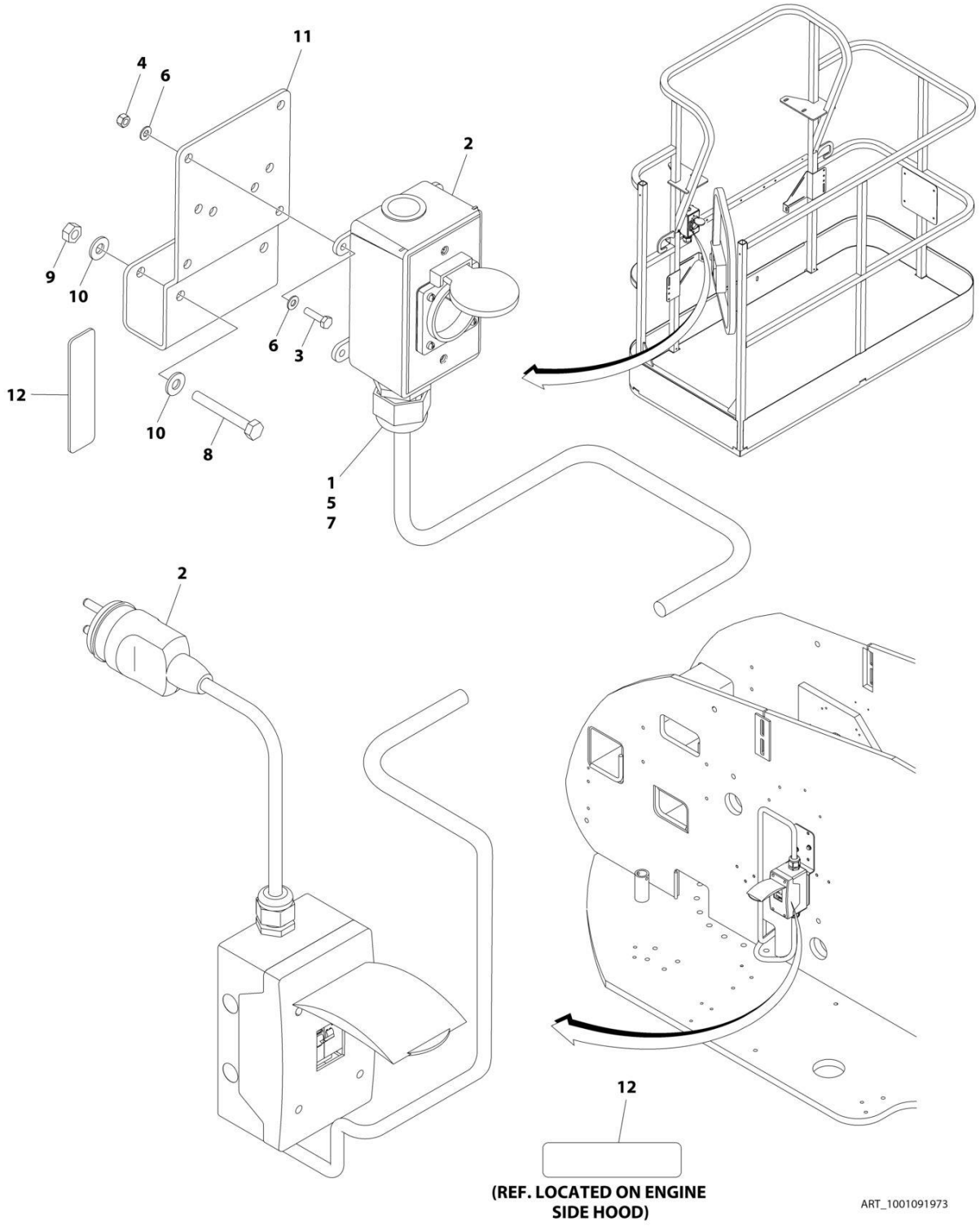

FIGURE 8-9. AC BOX AT PLATFORM INSTALLATION - 220V CEE7 POST GROUND (2X4 BOX) WITHOUT 2500W GENERATOR (CE & UK CA SPECS)

ITEM	PART NUMBER	QTY	DESCRIPTION	REV
	1001091973	Ref	AC BOX AT PLATFORM INSTALLATION - 220V CEE7 2X4 BOX POST GROUND	F
1	0100020	AR	Sealant, Pipe	
2	0275452	1	Receptacle Box Kit (See Separate Breakdown in this Section)	
3	0700408	4	Bolt M4 x 16	
4	3290405	4	Nut M4	
5	1001101197	1	Adapter	
6	4811400	8	Washer M4	
7	1001101191	1	Connector, Strain Relief	
8	0641416	2	Bolt 1/4 x 2	
9	3311405	2	Nut 1/4	
10	4711400	4	Washer 1/4	
11	1001193018	1	Bracket	
12	3251242	2	Decal - 240V/50Hz	
13	4460806	2	Terminal, Fork (Not Shown)	
14	1001205958	1	Terminal (Not Shown)	

FIGURE 8-10. AC BOX AT PLATFORM INSTALLATION - 220V CEE7 POST GROUND (2X4 BOX) WITHOUT 4000W GENERATOR (CE & UK CA SPECS)

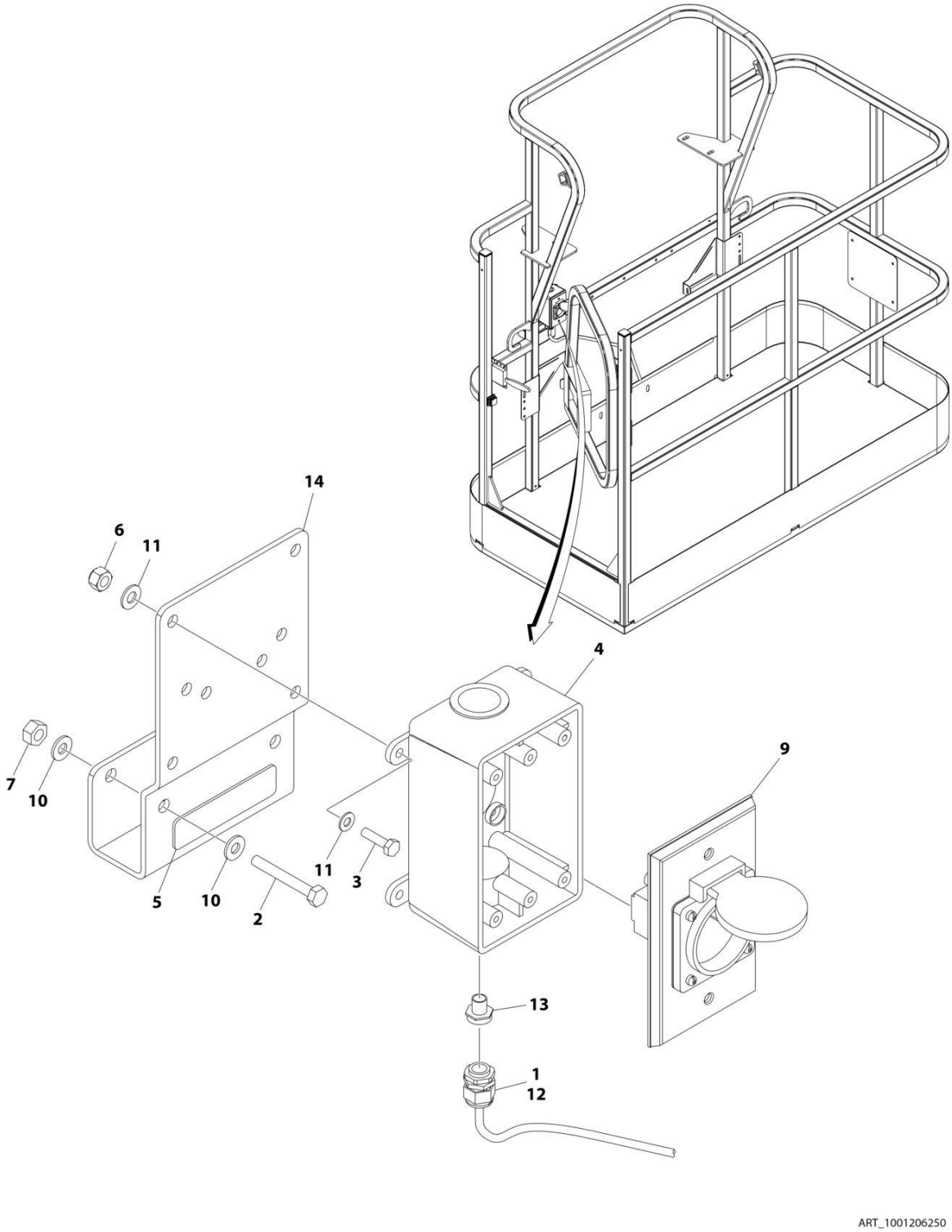

FIGURE 8-10. AC BOX AT PLATFORM INSTALLATION - 220V CEE7 POST GROUND (2X4 BOX) WITHOUT 4000W GENERATOR (CE & UK CA SPECS)

ITEM	PART NUMBER	QTY	DESCRIPTION	REV
	1001206250	Ref	AC BOX AT PLATFORM INSTALLATION - 220V CEE7 2X4 BOX POST GROUND	A
1	0100020	AR	Sealant, Pipe	
2	0641416	2	Bolt 1/4 x 2	
3	0700408	4	Bolt M4 x 16	
4	0861731	1	Box, Switch	
5	3251242	1	Decal - 240V/50Hz	
6	3290405	4	Nut M4	
7	3311405	2	Nut 1/4	
8	4460806	2	Terminal, Fork (Not Shown)	
9	4461244	1	Receptacle	
10	4711400	4	Washer 1/4	
11	4811400	8	Washer M4	
12	1001101191	1	Connector, Strain Relief	
13	1001101197	1	Adapter	
14	1001193018	1	Bracket, AC Receptacle	
15	1001205958	1	Terminal (Not Shown)	

FIGURE 8-11. AC BOX AT PLATFORM INSTALLATION - 220V CEE7 SIDE GROUND (2X4 BOX) WITHOUT 2500W GENERATOR (CE & UK CA SPECS)

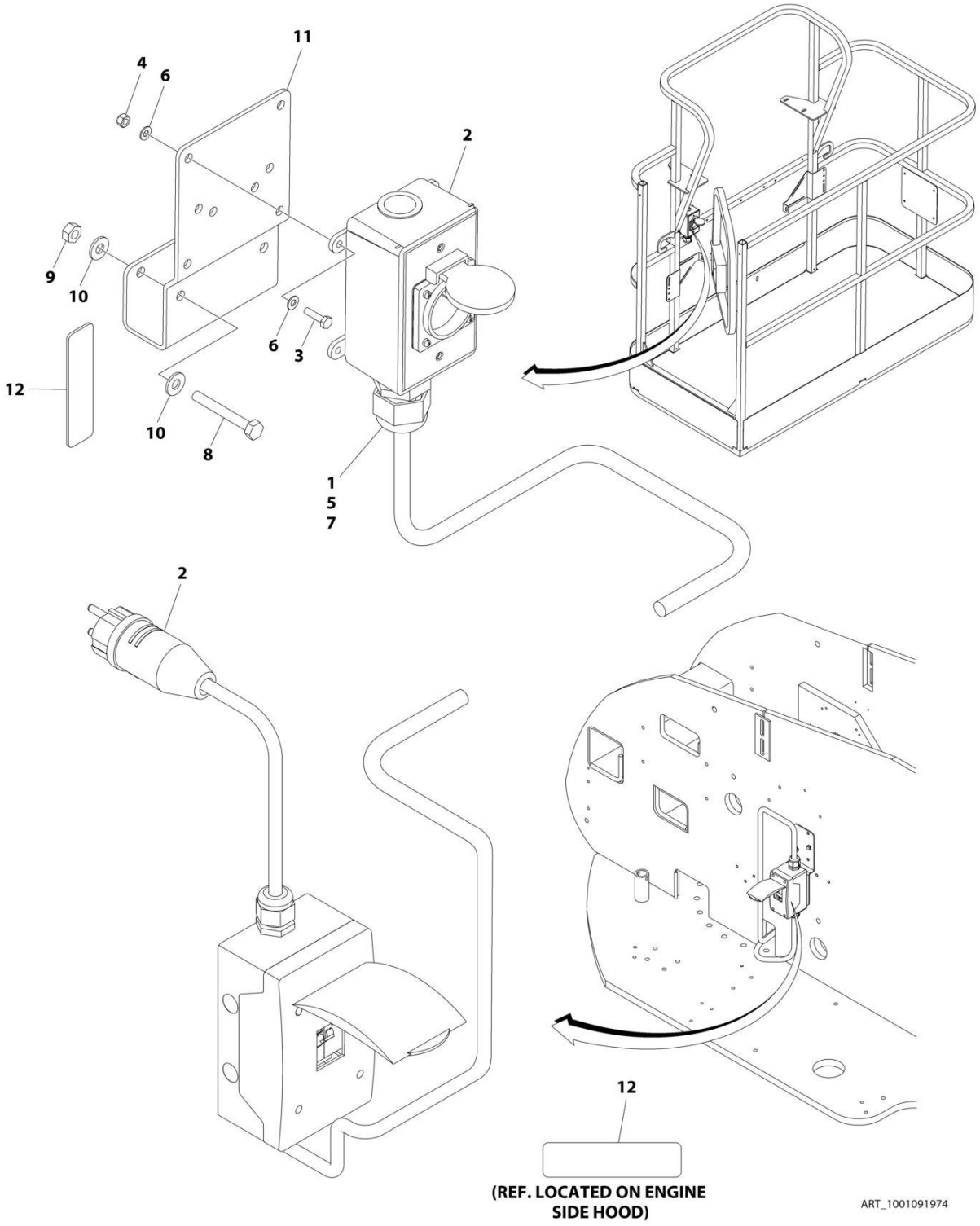

FIGURE 8-11. AC BOX AT PLATFORM INSTALLATION - 220V CEE7 SIDE GROUND (2X4 BOX) WITHOUT 2500W GENERATOR (CE & UK CA SPECS)

ITEM	PART NUMBER	QTY	DESCRIPTION	REV
	1001091974	Ref	AC BOX AT PLATFORM INSTALLATION - 220V CEE7 2X4 BOX SIDE GROUND	F
1	0100020	AR	Sealant, Pipe	
2	0275453	1	Receptacle Box Kit (See Separate Breakdown in this Section)	
3	0700408	4	Bolt M4 x 16	
4	3290405	4	Nut M4	
5	1001101197	1	Adapter	
6	4811400	8	Washer M4	
7	1001101191	1	Connector, Strain Relief	
8	0641416	2	Bolt 1/4 x 2	
9	3311405	2	Nut 1/4	
10	4711400	4	Washer 1/4	
11	1001193018	1	Bracket	
12	3251242	2	Decal - 240V/50Hz	
13	4460806	2	Terminal, Fork (Not Shown)	
14	1001205958	1	Terminal (Not Shown)	

FIGURE 8-12. AC BOX AT PLATFORM INSTALLATION - 220V CEE7 SIDE GROUND (2X4 BOX) WITHOUT 4000W GENERATOR (CE & UK CA SPECS)

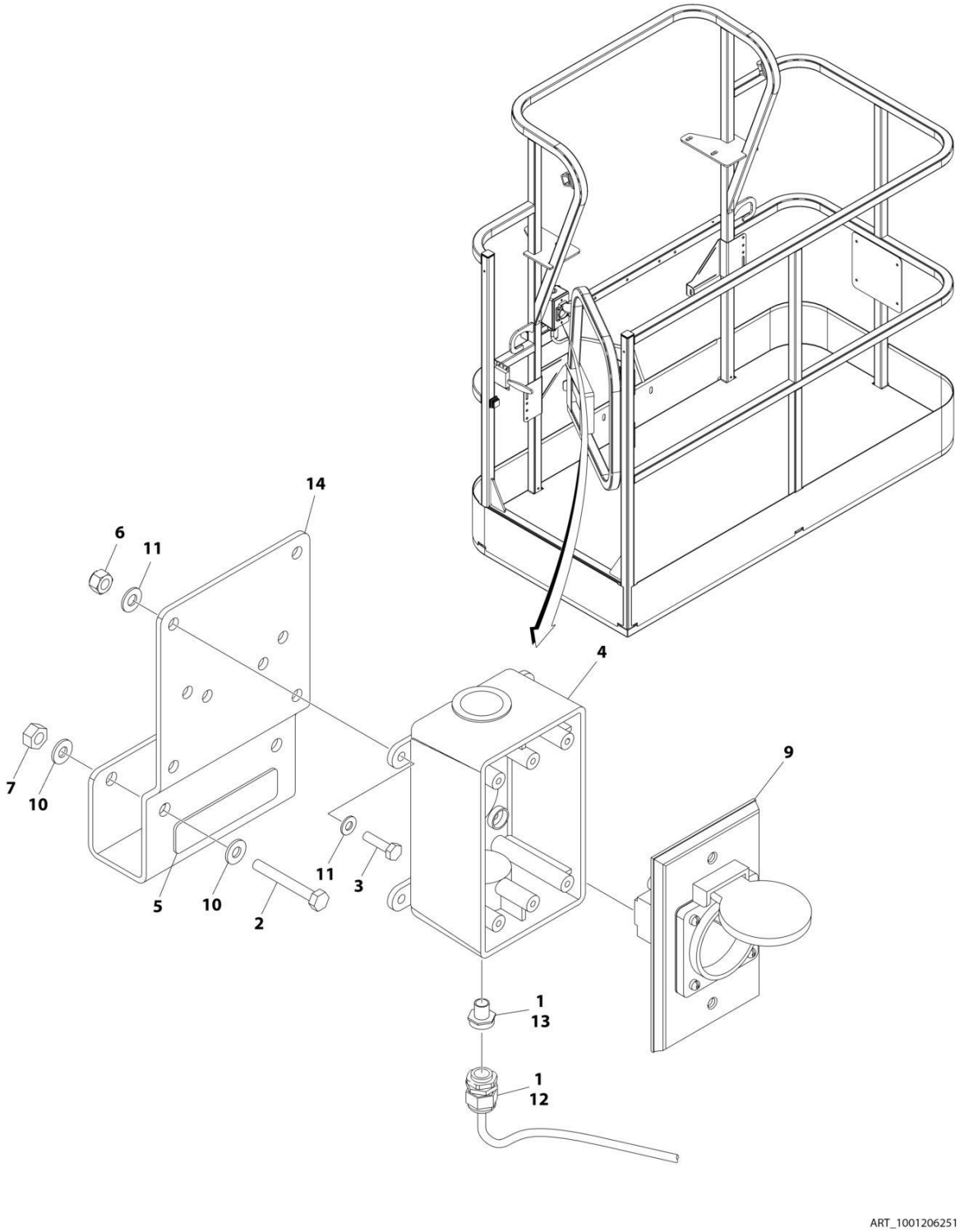

FIGURE 8-12. AC BOX AT PLATFORM INSTALLATION - 220V CEE7 SIDE GROUND (2X4 BOX) WITHOUT 4000W GENERATOR (CE & UK CA SPECS)

ITEM	PART NUMBER	QTY	DESCRIPTION	REV
	1001206251	Ref	AC BOX AT PLATFORM INSTALLATION - 220V CEE7 2X4 BOX SIDE GROUND	A
1	0100020	AR	Sealant, Pipe	
2	0641416	2	Bolt 1/4 x 2	
3	0700408	4	Bolt M4 x 16	
4	0861731	1	Box, Switch	
5	3251242	1	Decal - 240V/50Hz	
6	3290405	4	Nut M4	
7	3311405	2	Nut 1/4	
8	4460806	2	Terminal, Fork (Not Shown)	
9	4461245	1	Receptacle	
10	4711400	4	Washer 1/4	
11	4811400	8	Washer M4	
12	1001101191	1	Connector, Strain Relief	
13	1001101197	1	Adapter	
14	1001193018	1	Bracket, AC Receptacle	
15	1001205958	1	Terminal (Not Shown)	

FIGURE 8-13. AC BOX AT PLATFORM INSTALLATION - 220V AFSINT 107 KEYED GROUND (2X4 BOX) WITHOUT 2500W GENERATOR (CE & UK CA SPECS)

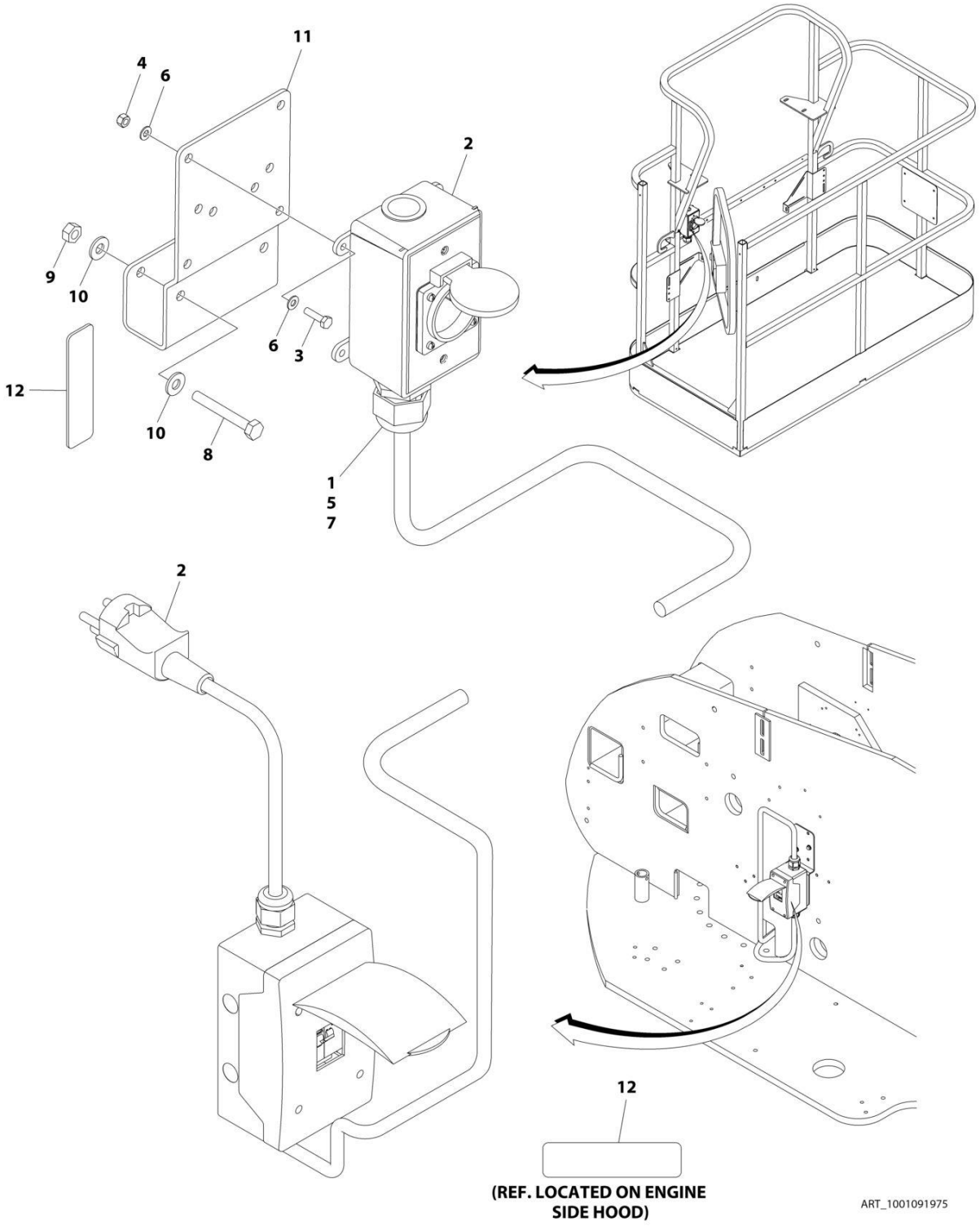

FIGURE 8-13. AC BOX AT PLATFORM INSTALLATION - 220V AFSINT 107 KEYED GROUND (2X4 BOX) WITHOUT 2500W GENERATOR (CE & UK CA SPECS)

ITEM	PART NUMBER	QTY	DESCRIPTION	REV
	1001091975	Ref	AC BOX AT PLATFORM INSTALLATION - 220V AFSINT 107 2X4 BOX KEYED GROUND	F
1	0100020	AR	Sealant, Pipe	
2	0275454	1	Receptacle Box Kit (See Separate Breakdown in this Section)	
3	0700408	4	Bolt M4 x 16	
4	3290405	4	Nut M4	
5	1001101197	1	Adapter	
6	4811400	8	Washer M4	
7	1001101191	1	Connector, Strain Relief	
8	0641416	2	Bolt 1/4 x 2	
9	3311405	2	Nut 1/4	
10	4711400	4	Washer 1/4	
11	1001193018	1	Bracket	
12	3251242	2	Decal - 240V/50Hz	
13	1001205958	3	Terminal (Not Shown)	

FIGURE 8-14. AC BOX AT PLATFORM INSTALLATION - 240V (WITH 4000W GENERATOR) (ANSI, ANSI EXPORT, CSA AND JAPANESE SPECS)

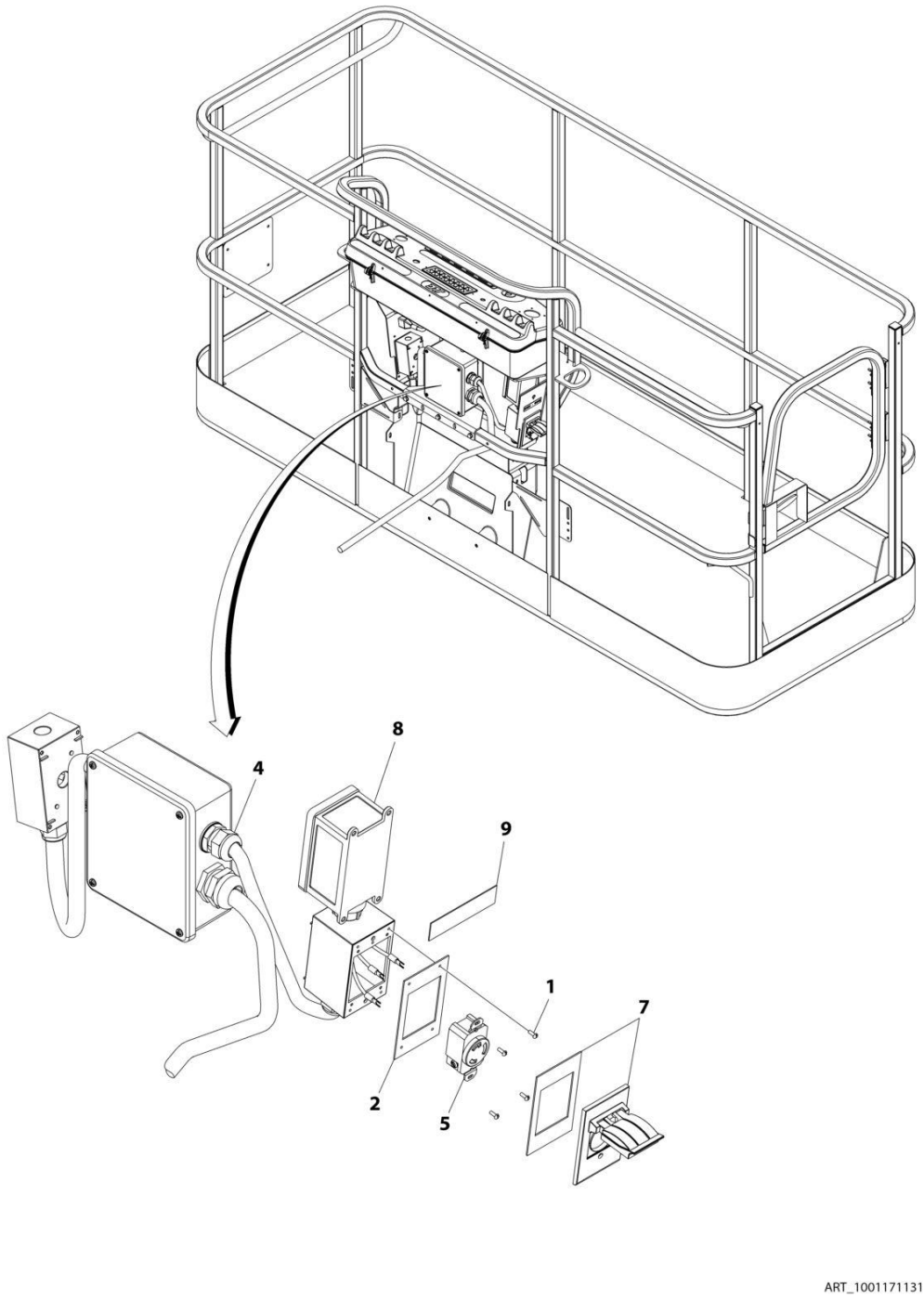

FIGURE 8-14. AC BOX AT PLATFORM INSTALLATION - 240V (WITH 4000W GENERATOR) (ANSI, ANSI EXPORT, CSA AND JAPANESE SPECS)

ITEM	PART NUMBER	QTY	DESCRIPTION	REV
	1001171131	Ref	AC BOX AT PLATFORM INSTALLATION - 240V RECEPTACLE	B
1	3910606	4	Screw 6 x 3/8	
2	3960422	1	Gasket	
3	4240018	AR	Tie-Strap (Not Shown)	
4	4460425	1	Connector, Strain Relief	
5	1001176862	1	Receptacle	
7	1001110872	1	Cover, Receptacle	
8	1001159120	1	Receptacle/Breaker Box Assembly	
8	1001148675	1	Box, Receptacle	
8	1001159118	1	Breaker GFCI 30Amp 240VAC	
8	4460612	1	Connector, Strain Relief	
8	1001159119	1	Connector (Between Boxes)	
9	1705374	1	Decal - 240V/60Hz	

FIGURE 8-15. AC BOX AT PLATFORM INSTALLATION - 240V (WITH 7500W SKYPOWER GENERATOR) (ALL SPECS EXCEPT AUSTRALIAN & CE & UK CA SPECS)

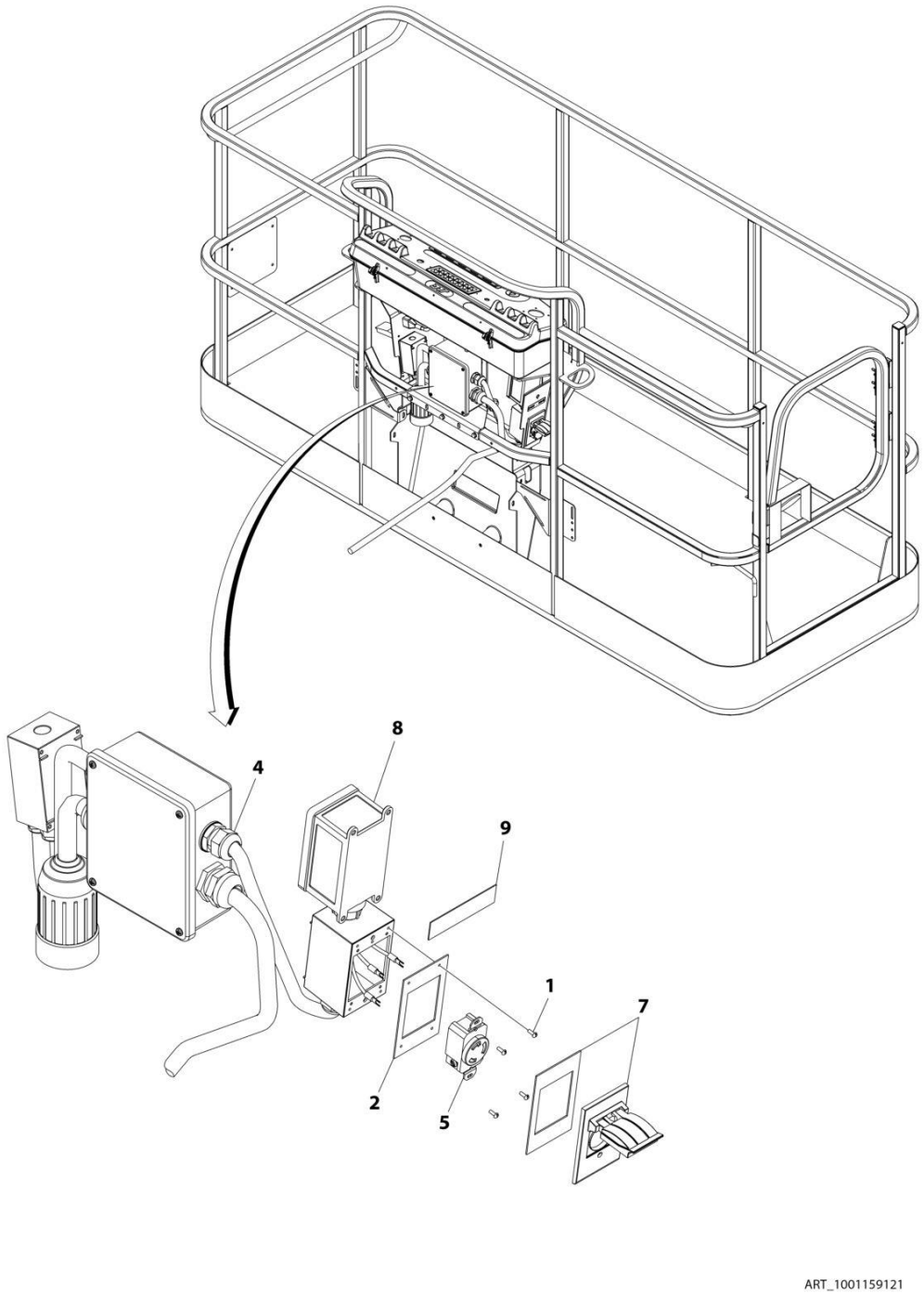

FIGURE 8-15. AC BOX AT PLATFORM INSTALLATION - 240V (WITH 7500W SKYPOWER GENERATOR) (ALL SPECS EXCEPT AUSTRALIAN & CE & UK CA SPECS)

ITEM	PART NUMBER	QTY	DESCRIPTION	REV
	1001159121	Ref	AC BOX AT PLATFORM INSTALLATION - 240V RECEPTACLE	B
1	3910606	4	Screw 6 x 3/8	
2	3960422	1	Gasket	
3	4240018	AR	Tie-Strap (Not Shown)	
4	4460425	1	Connector, Strain Relief	
5	4460958	1	Receptacle	
7	1001110872	1	Cover, Receptacle	
8	1001159120	1	Receptacle/Breaker Box Assembly	
8	1001148675	1	Box, Receptacle	
8	1001159118	1	Breaker Box Assembly	
8	4460612	1	Connector, Strain Relief	
8	1001159119	1	Connector (Between Boxes)	
9	1705374	1	Decal - 240V/60Hz	

FIGURE 8-16. AC BOX AT PLATFORM INSTALLATION - 220V AFSINT 107 KEYED GROUND (2X4 BOX) WITHOUT 4000W GENERATOR (CE & UK CA SPECS)

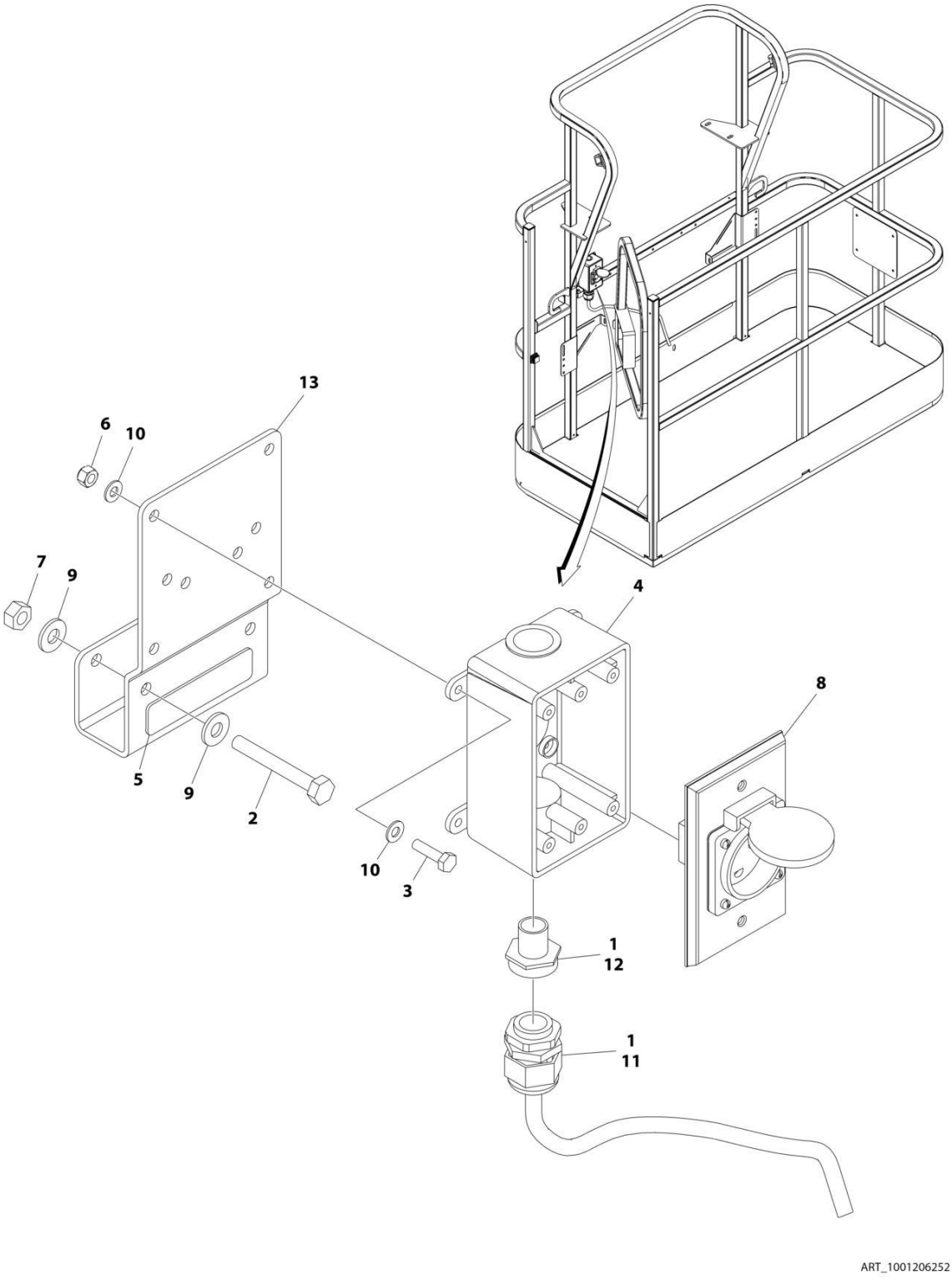

FIGURE 8-16. AC BOX AT PLATFORM INSTALLATION - 220V AFSINT 107 KEYED GROUND (2X4 BOX) WITHOUT 4000W GENERATOR (CE & UK CA SPECS)

ITEM	PART NUMBER	QTY	DESCRIPTION	REV
	1001206252	Ref	AC BOX AT PLATFORM INSTALLATION - 220V AFSINT 107 2x4 BOX KEYED GROUND	A
1	0100020	AR	Sealant, Pipe	
2	0641416	2	Bolt 1/4 x 2	
3	0700408	4	Bolt M4 x 16	
4	0861731	1	Box, Switch	
5	3251242	1	Decal - 240V/50Hz	
6	3290405	4	Nut M4	
7	3311405	2	Nut 1/4	
8	4461246	1	Receptacle	
9	4711400	4	Washer 1/4	
10	4811400	8	Washer M4	
11	1001101191	1	Connector, Strain Relief	
12	1001101197	1	Adapter	
13	1001193018	1	Bracket, AC Receptacle	
14	1001205958	3	Terminal (Not Shown)	

FIGURE 8-17. AC 16 AMP BREAKER BOX INSTALLATION (CE & UK CA SPECS)

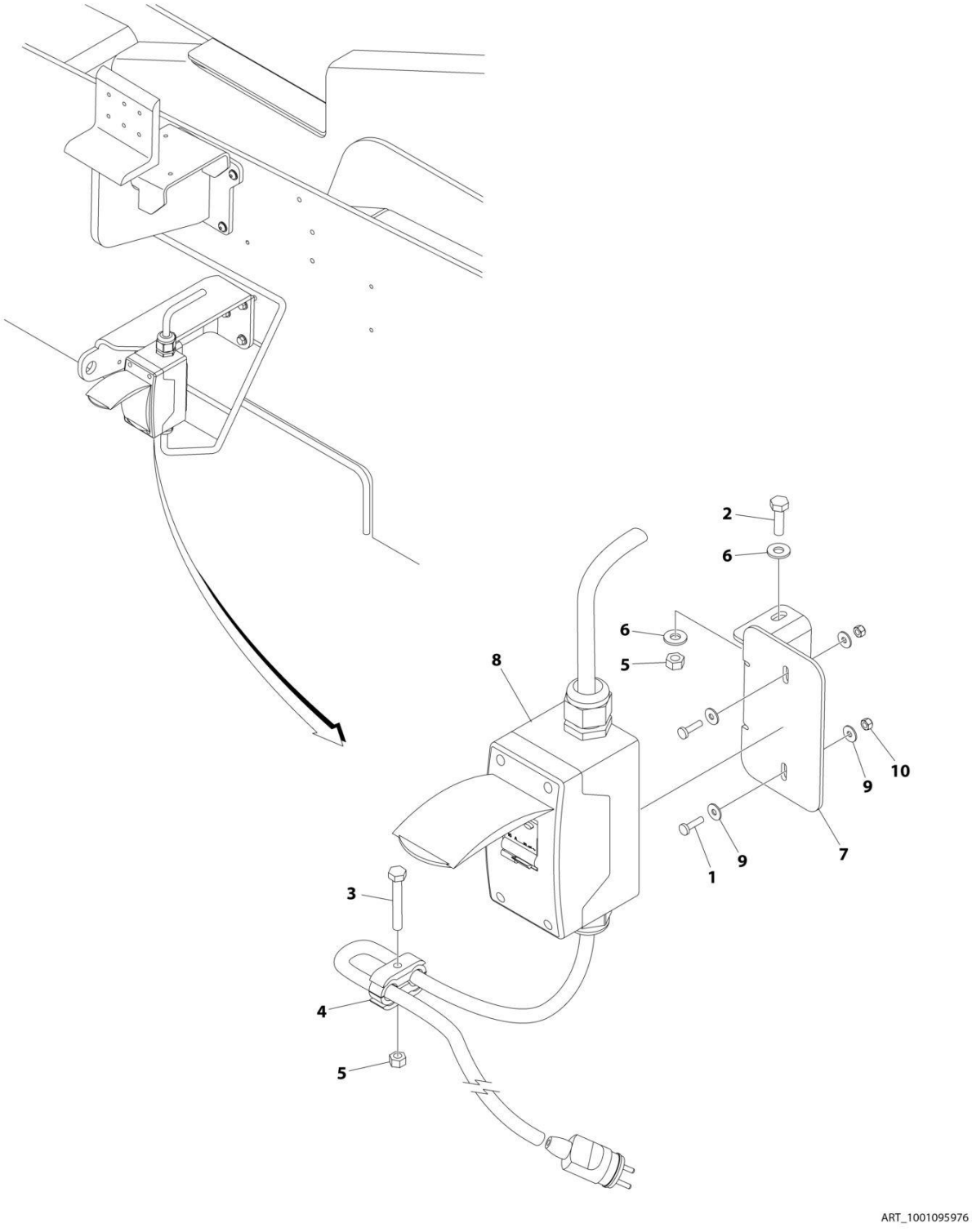

FIGURE 8-17. AC 16 AMP BREAKER BOX INSTALLATION (CE & UK CA SPECS)

ITEM	PART NUMBER	QTY	DESCRIPTION	REV
	1001095976	Ref	AC 16 AMP BREAKER BOX INSTALLATION	D
1	4010408	2	Screw M4 x 16	
2	0641407	2	Bolt 1/4 x 7/8	
3	0641416	AR	Bolt 1/4 x 2	
4	1320146	1	Clamp	
5	3311405	AR	Nut 1/4	
6	4711400	AR	Washer 1/4	
7	1001094915	1	Bracket	
8	1001109654	1	Breaker Box Kit - 16 Amp (See Separate Breakdown in this Section)	
9	1001091102	4	Washer M4	
10	3290405	2	Nut M4	

FIGURE 8-18. ANALYZER CABLE HARNESS

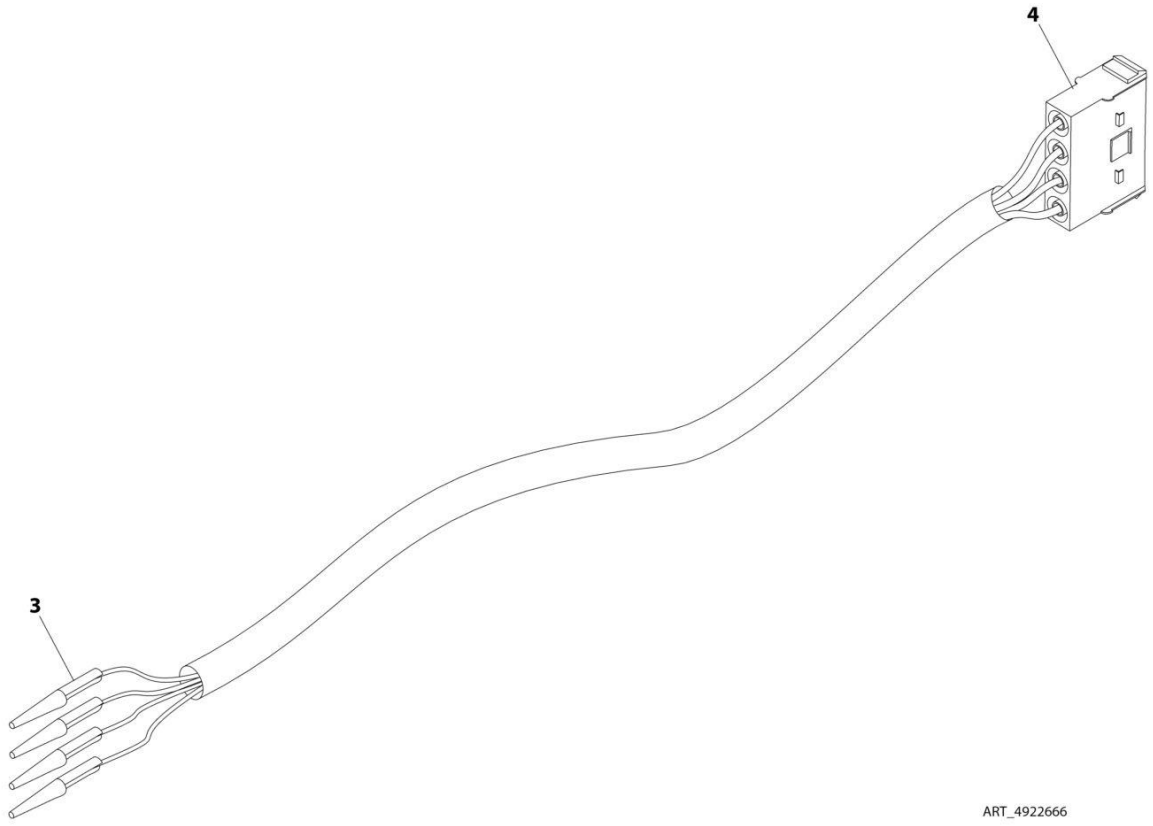

FIGURE 8-18. ANALYZER CABLE HARNESS

ITEM	PART NUMBER	QTY	DESCRIPTION	REV
	4922666	Ref	ANALYZER CABLE HARNESS	C
3	4460226	4	Socket, Female	
4	4460761	1	Connector - 4 Position	
4	4460227	4	Pin, Male	

FIGURE 8-19. AXLE POWER TRACK HARNESS ASSEMBLY

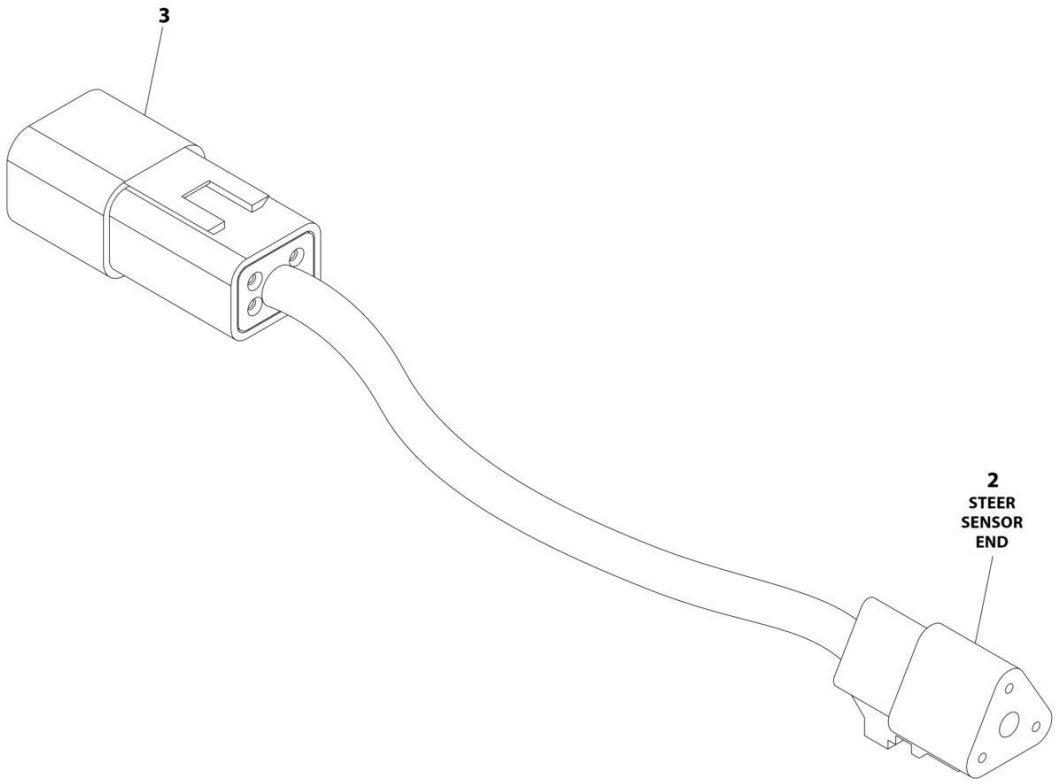

FIGURE 8-19. AXLE POWER TRACK HARNESS ASSEMBLY

ITEM	PART NUMBER	QTY	DESCRIPTION	REV
	4922718	Ref	AXLE POWER TRACK HARNESS ASSEMBLY	E
2	4460539	1	Connector - 3 Position	
2	4460944	3	Socket, Female	
3	4460932	1	Connector - 4 Position	
3	4460943	4	Pin, Male	

FIGURE 8-20. BATTERY DISCONNECT SWITCH

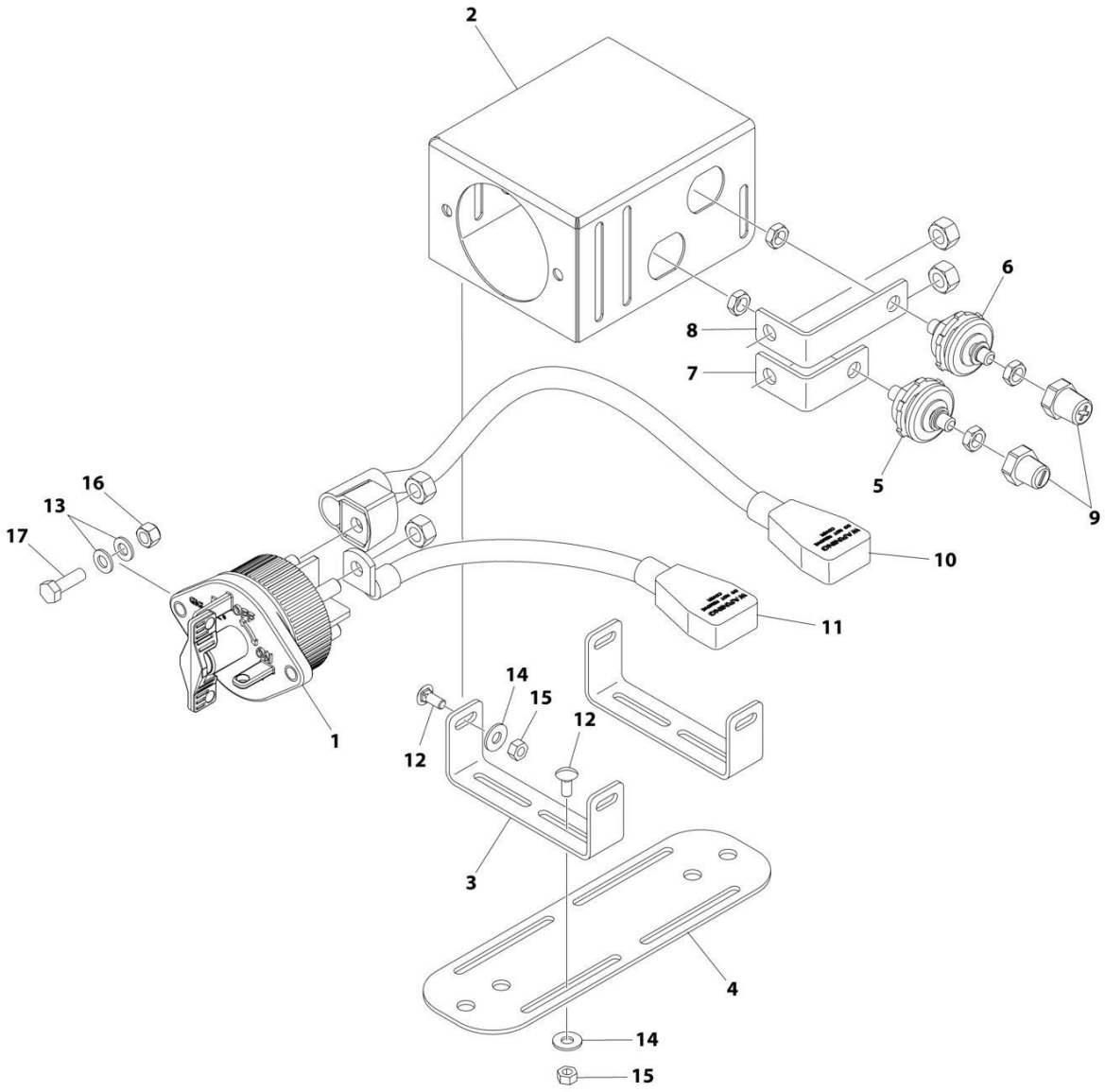

FIGURE 8-20. BATTERY DISCONNECT SWITCH

ITEM	PART NUMBER	QTY	DESCRIPTION	REV
	1001241630	Ref	BATTERY DISCONNECT SWITCH	A
1	1001225346	1	Switch, Battery Disconnect	
2	1001226531	1	Mount	
3	1001239805	2	Mount	
4	1001241585	1	Plate	
5	1001214571	1	Connector (Black)	
6	1001214570	1	Connector (Red)	
7	1001209474	1	Buss bar	
8	1001209432	1	Buss bar	
9	1001206476	1	Connector	
10	1001236504	1	Cable (Positive)	
11	1001236505	1	Cable (Negative)	
12	88411013	8	Bolt 1/4 x 3/4	
13	4811900	4	Washer M8	
14	4751400	8	Washer 1/4	
15	3311405	8	Nut 1/4	
16	3290805	2	Nut M8	
17	0760812	2	Bolt M8 x 25	

FIGURE 8-21. BEACON LIGHT HARNESS (BLUE BEACON LIGHT ONLY)

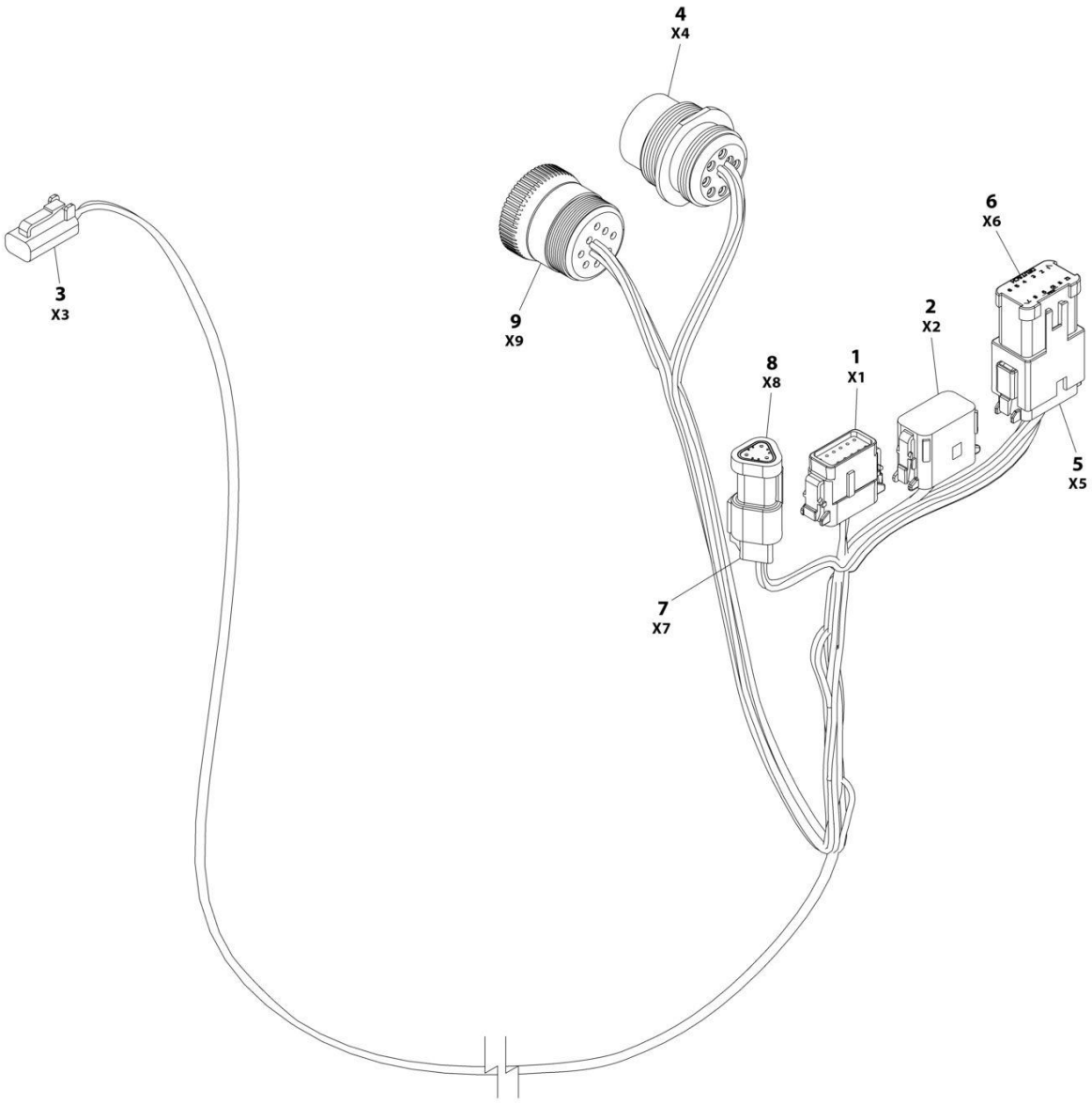

FIGURE 8-21. BEACON LIGHT HARNESS (BLUE BEACON LIGHT ONLY)

ITEM	PART NUMBER	QTY	DESCRIPTION	REV
	1001142736	Ref	STROBE LIGHT HARNESS	F
1	1001116808	1	Plug, Male - 12 Position	
1	4460928	3	Socket, Female	
1	4460518	9	Plug, Terminal	
2	1001116774	1	Plug, Male - 12 Position	
2	4460928	3	Socket, Female	
2	4460518	9	Plug, Terminal	
3	4460891	1	Plug, Male - 2 Position	
3	4460465	2	Socket, Female	
4	1001112612	1	Connector - 9 Position	
4	4460464	6	Pin, Male	
4	4460466	3	Plug, Terminal	
5	4460933	1	Plug, Male - 12 Position	
5	4460465	12	Socket, Female	
6	1001119020	1	Bussbar - 12 Position	
7	4461095	1	Plug, Male - 3 Position	
7	4460465	3	Socket, Female	
8	4461070	1	Bussbar - 3 Position	
9	1001112796	1	Connector - 9 Position	
9	4460465	6	Socket, Female	
9	4460466	3	Plug, Terminal	

FIGURE 8-22. B.L.A.M. TO BOOM LENGTH SENSOR HARNESS

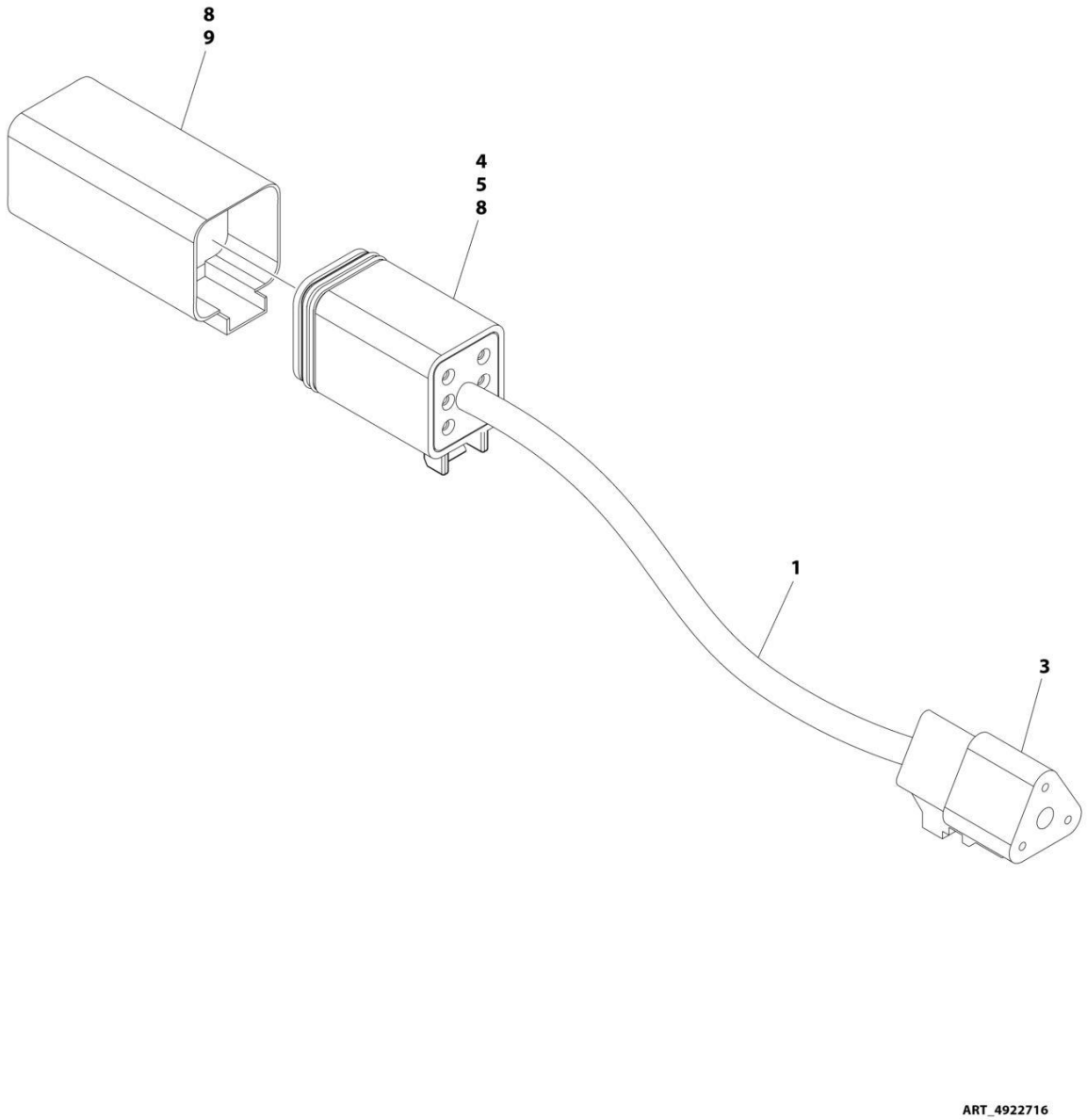

FIGURE 8-22. B.L.A.M. TO BOOM LENGTH SENSOR HARNESS

ITEM	PART NUMBER	QTY	DESCRIPTION	REV
	4922716	Ref	B.L.A.M. TO BOOM LENGTH SENSOR HARNESS	H
1	1060981	14 ft/ 4.3m	Cable, Electrical 18/3	
3	4460539	1	Connector - 3 Position	
4	4460944	7	Socket, Female (Gold)	
5	4460894	1	Plug, Male - 6 Position	
8	4460466	AR	Plug, Terminal	
9	4460899	1	Connector, Female - 6 Position	

FIGURE 8-23. B.L.A.M. TO BOOM ANGLE SENSOR HARNESS (LEFT SIDE)

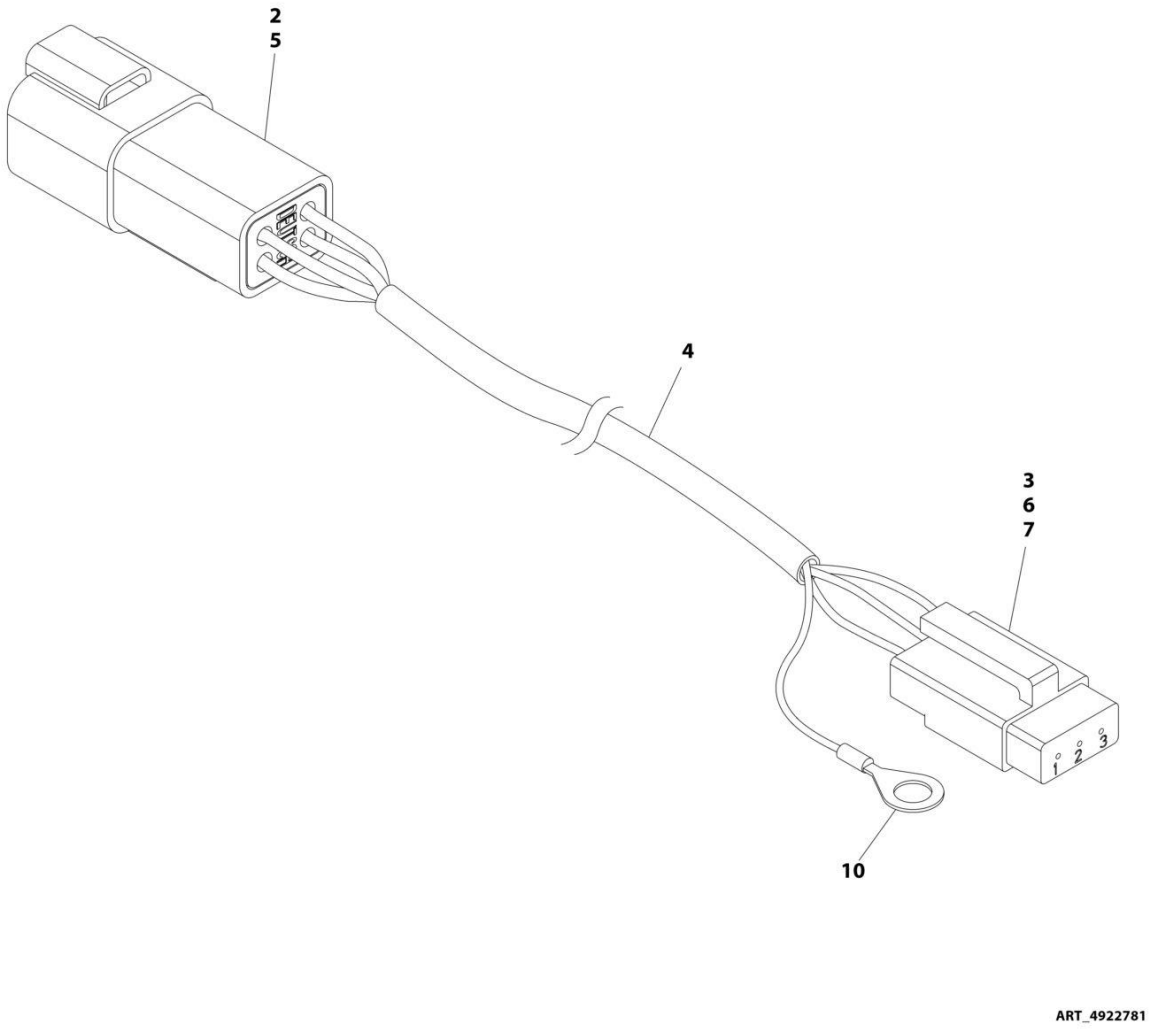

FIGURE 8-23. B.L.A.M. TO BOOM ANGLE SENSOR HARNESS (LEFT SIDE)

ITEM	PART NUMBER	QTY	DESCRIPTION	REV
	4922781	Ref	B.L.A.M. TO BOOM ANGLE SENSOR HARNESS (LEFT SIDE)	F
2	4460932	1	Connector, Female - 4 Position	
3	4460912	1	Lock, Wedge - Position	
4	1060982	16.2 ft/ 4.9m	Cable, Electrical 18/3	
5	4460943	4	Pin, Male 16 Ga	
6	4460911	1	Plug, Male - 3 Position	
7	4460918	3	Socket, Female (Gold)	
10	4460722	1	Terminal, Ring	

FIGURE 8-24. B.L.A.M. TO BOOM ANGLE SENSOR HARNESS (RIGHT SIDE)

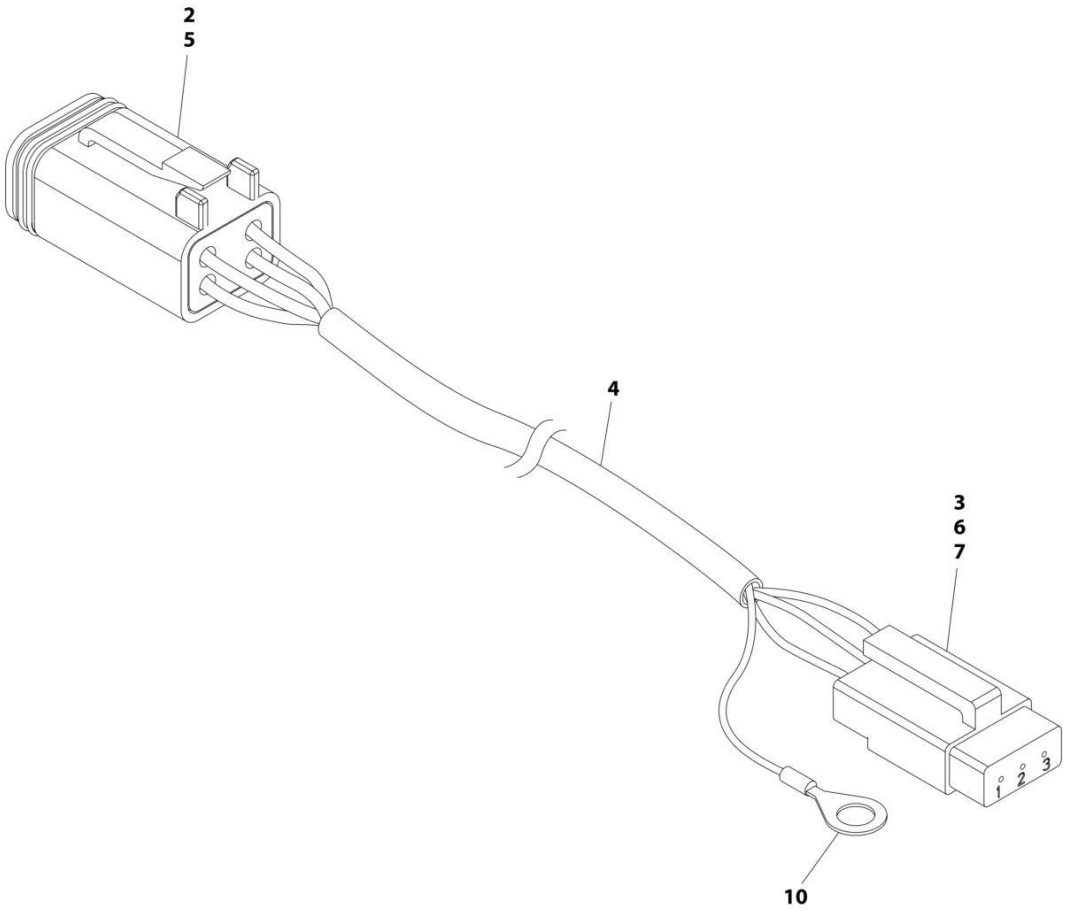

FIGURE 8-24. B.L.A.M. TO BOOM ANGLE SENSOR HARNESS (RIGHT SIDE)

ITEM	PART NUMBER	QTY	DESCRIPTION	REV
	4922780	Ref	B.L.A.M. TO BOOM ANGLE SENSOR HARNESS (RIGHT SIDE)	E
2	4460884	1	Connector, Gray - 4 Position	
3	4460912	1	Lock, Wedge - Position	
4	1060981	16.2 ft/ 4.9m	Cable, Electrical 18/3	
5	4460944	4	Socket, Female (Gold)	
6	4460911	1	Plug, Male - 3 Position	
7	4460918	3	Socket, Female (Gold)	
10	4460722	1	Terminal, Ring	

FIGURE 8-25. B.L.A.M. HARNESS

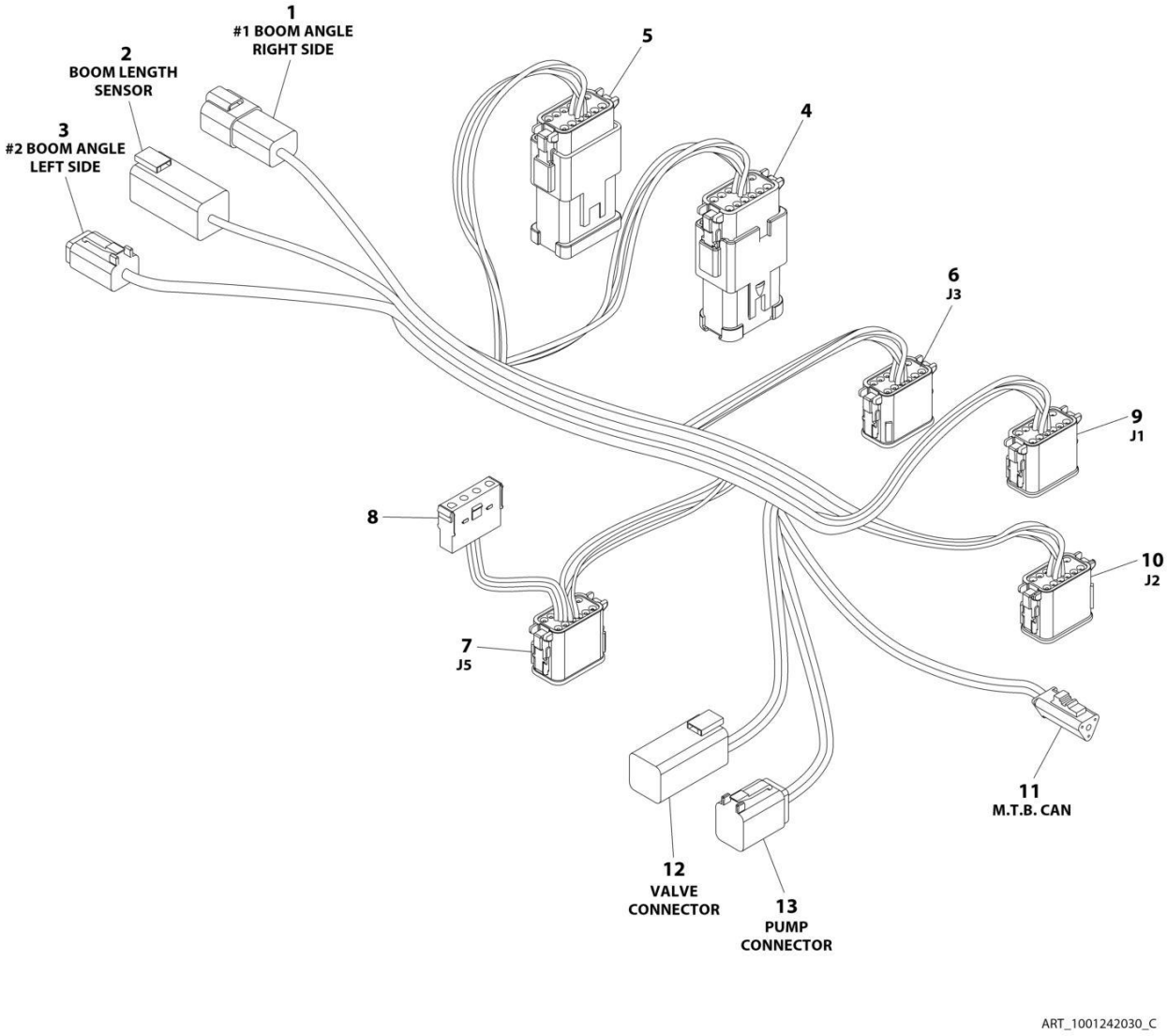

FIGURE 8-25. B.L.A.M. HARNESS

ITEM	PART NUMBER	QTY	DESCRIPTION	REV
	1001242030	Ref	B.L.A.M. HARNESS	C
1	4460932	1	Connector - 4 Position (Gray)	
1	4460943	4	Pin, Male	
2	4460899	1	Connector, Female - 6 Position	
2	4460943	4	Pin, Male (Gold)	
2	4460466	2	Plug, Seal	
3	4460884	1	Connector - 4 Position (Gray)	
3	4460944	4	Socket, Female	
4	1001270340	1	Connector - 12 Position (Black)	
4	4460466	8	Plug, Seal	
4	4460465	2	Socket, Female	
4	4460942	2	Socket, Female	
4	1001271323	1	Connector - 12 Position Buss Bar	
5	1001270340	1	Plug, Male - 12 Position (Black)	
5	4460466	6	Plug, Seal	
5	4460944	5	Socket, Female	
5	4460465	1	Socket, Female	
5	4460837	1	Connector - 12 Position Buss Bar	
6	1001239344	1	Connector - 12 Position (Green)	
6	4460466	7	Plug, Seal	
6	4460944	3	Socket, Female	
6	4460465	2	Socket, Female	
7	1001239345	1	Connector - 12 Position (Brown)	
7	4460466	5	Plug, Seal	
7	4460465	7	Socket, Female	
8	4460761	1	Connector, Female - 4 Position (Natural)	
8	4460227	4	Pin, Male	
9	1001270339	1	Connector - 12 Position (Gray)	
9	4460466	7	Plug, Seal	
9	4460944	3	Socket, Female	
9	4460465	1	Socket, Female	
9	4460942	1	Socket, Female	
10	1001270340	1	Connector - 12 Position (Black)	
10	4460466	7	Plug, Seal	
10	4460944	2	Socket, Female	
10	4460465	3	Socket, Female	
11	4460966	1	Plug, Male - 3 Position (Green Lock)	
11	4460944	3	Socket, Female	
12	4460899	1	Connector, Female - 6 Position	
12	4460464	3	Socket, Female	
12	4460941	3	Pin, Male	
13	4460894	1	Connector - 6 Position (Gray)	
13	4460465	4	Socket, Female	
13	4460466	2	Plug, Seal	
14	4240033	AR	Tie-Strap (Not Shown)	

FIGURE 8-26. BOOM CABLES INSTALLATION (ANSI, ANSI EXPORT, CHINA, CSA AND JAPANESE SPECS) (1200SJP)

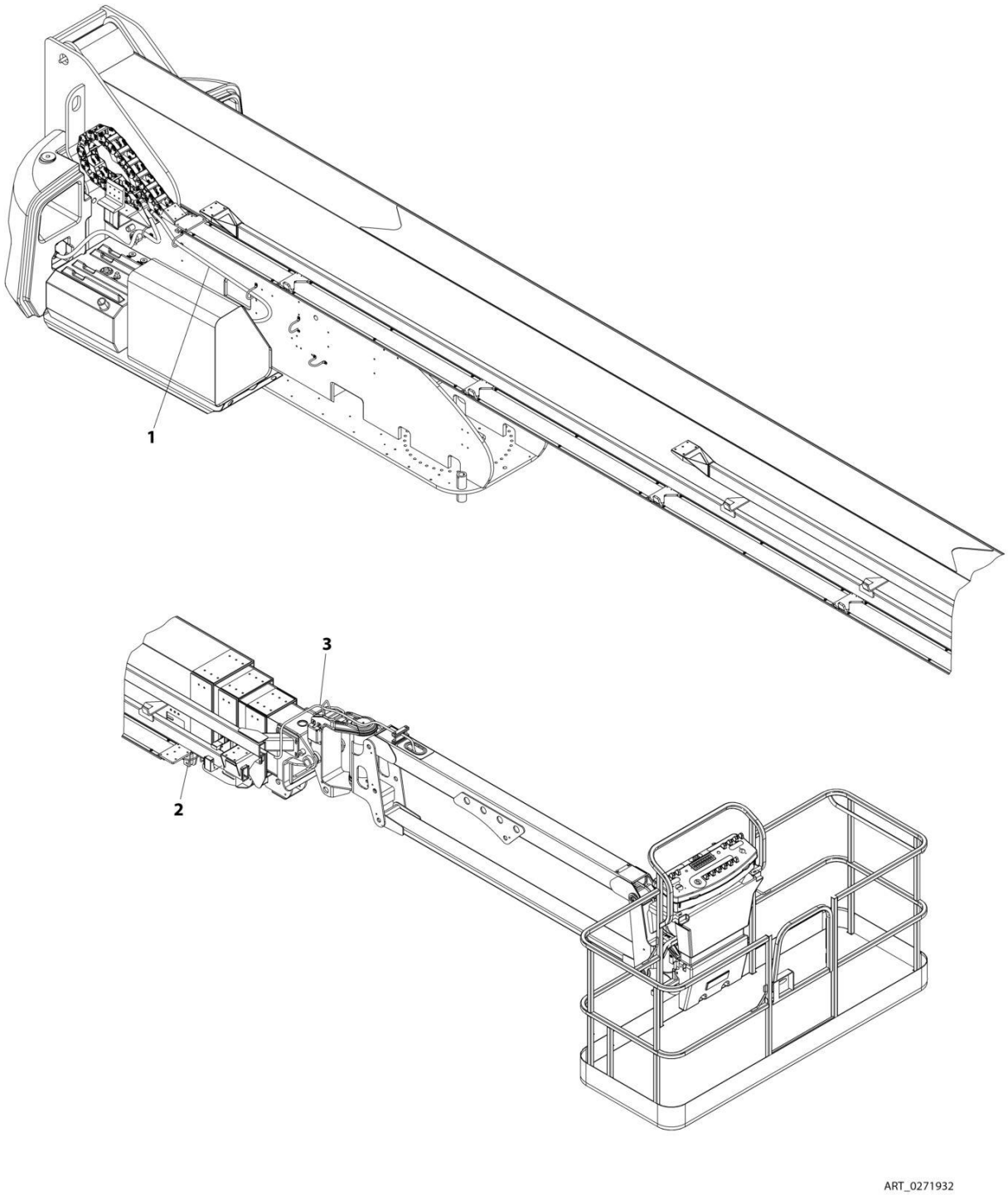

FIGURE 8-26. BOOM CABLES INSTALLATION (ANSI, ANSI EXPORT, CHINA, CSA AND JAPANESE SPECS) (1200SJP)

ITEM	PART NUMBER	QTY	DESCRIPTION	REV
	0271932	Ref	BOOM CABLES INSTALLATION	D
1	4922759	1	Harness, 10/3 AC	
2	4922763	1	Harness, 18/3 Transport Switch	
3	4922672	1	Harness, Main Boom Control (See Separate Breakdown in this Section)	

FIGURE 8-27. BOOM CABLES INSTALLATION (ANSI, ANSI EXPORT, CHINA, CSA AND JAPANESE SPECS) (1350SJP)

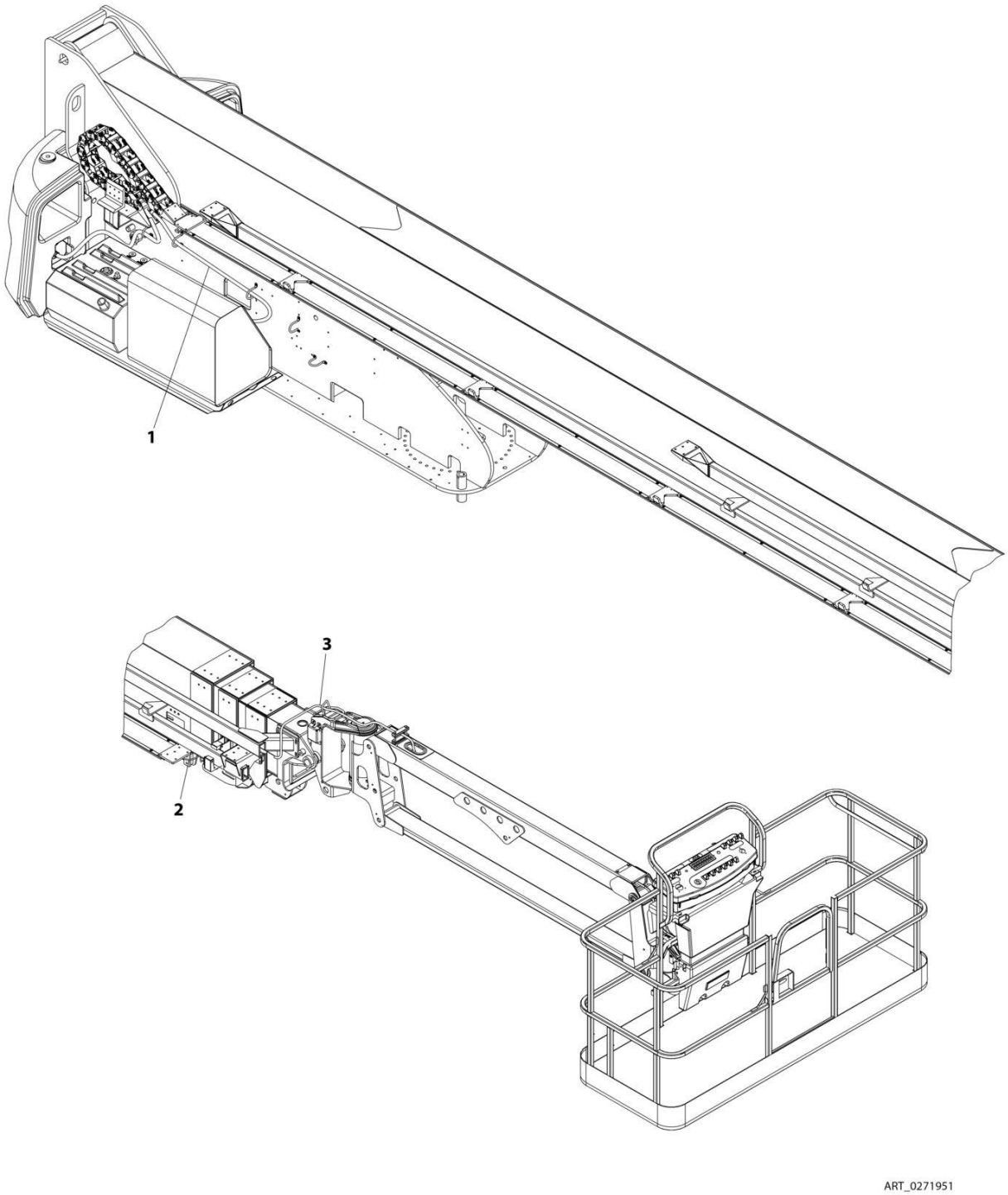

FIGURE 8-27. BOOM CABLES INSTALLATION (ANSI, ANSI EXPORT, CHINA, CSA AND JAPANESE SPECS) (1350SJP)

ITEM	PART NUMBER	QTY	DESCRIPTION	REV
	0271951	Ref	BOOM CABLES INSTALLATION	D
1	4922758	1	Harness, 10/3 AC	
2	4922762	1	Harness, 18/3 Transport Switch	
3	4922673	1	Harness, Main Boom Control (See Separate Breakdown in this Section)	

FIGURE 8-28. BOOM CABLES INSTALLATION (AUSTRALIAN, CE & UK CA SPECS) (1200SJP)

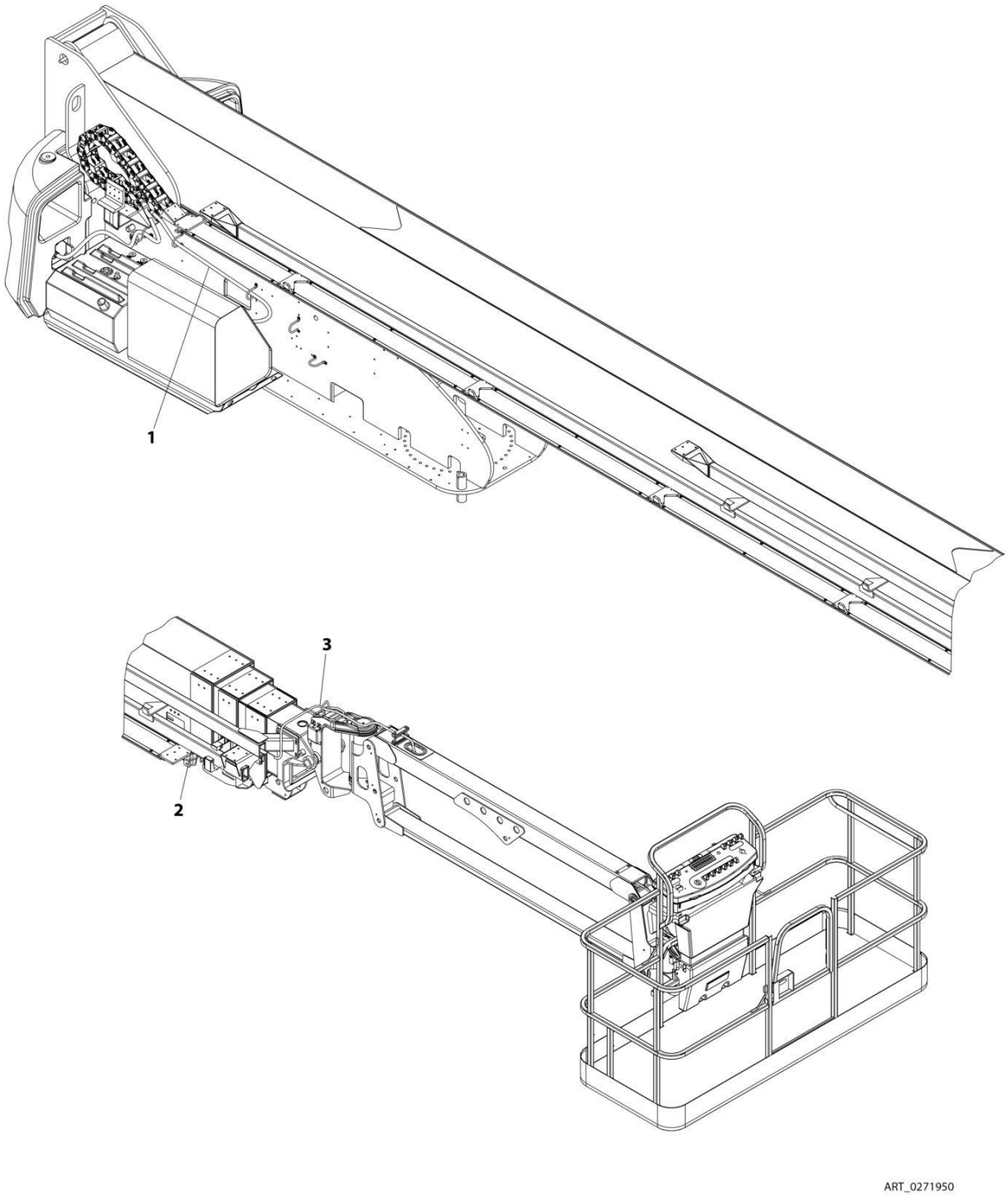

FIGURE 8-28. BOOM CABLES INSTALLATION (AUSTRALIAN, CE & UK CA SPECS) (1200SJP)

ITEM	PART NUMBER	QTY	DESCRIPTION	REV
	0271950	Ref	BOOM CABLES INSTALLATION	D
1	4922761	1	Harness, 10/3 AC	
2	4922763	1	Harness, 18/3 Transport Switch	
3	4922672	1	Harness, Main Boom Control (See Separate Breakdown in this Section)	

FIGURE 8-29. BOOM CABLES INSTALLATION (AUSTRALIAN, CE & UK CA SPECS) (1350SJP)

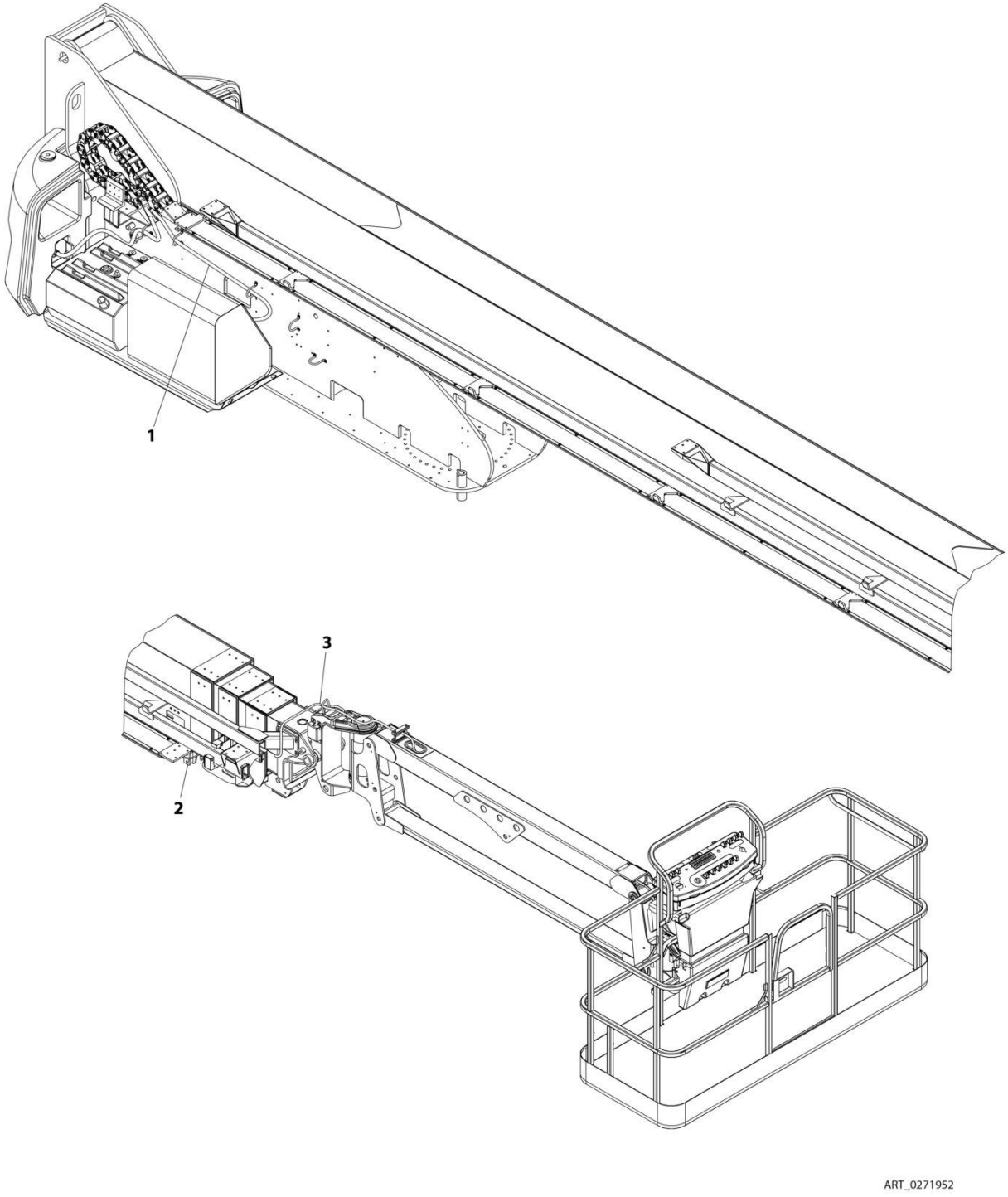

FIGURE 8-29. BOOM CABLES INSTALLATION (AUSTRALIAN, CE & UK CA SPECS) (1350SJP)

ITEM	PART NUMBER	QTY	DESCRIPTION	REV
	0271952	Ref	BOOM CABLES INSTALLATION	D
1	4922760	1	Harness, 10/3 AC	
2	4922762	1	Harness, 18/3 Transport Switch	
3	4922673	1	Harness, Main Boom Control (See Separate Breakdown in this Section)	

FIGURE 8-30. BOOM CABLES INSTALLATION - WITH 4000W GENERATOR (1200SJP)

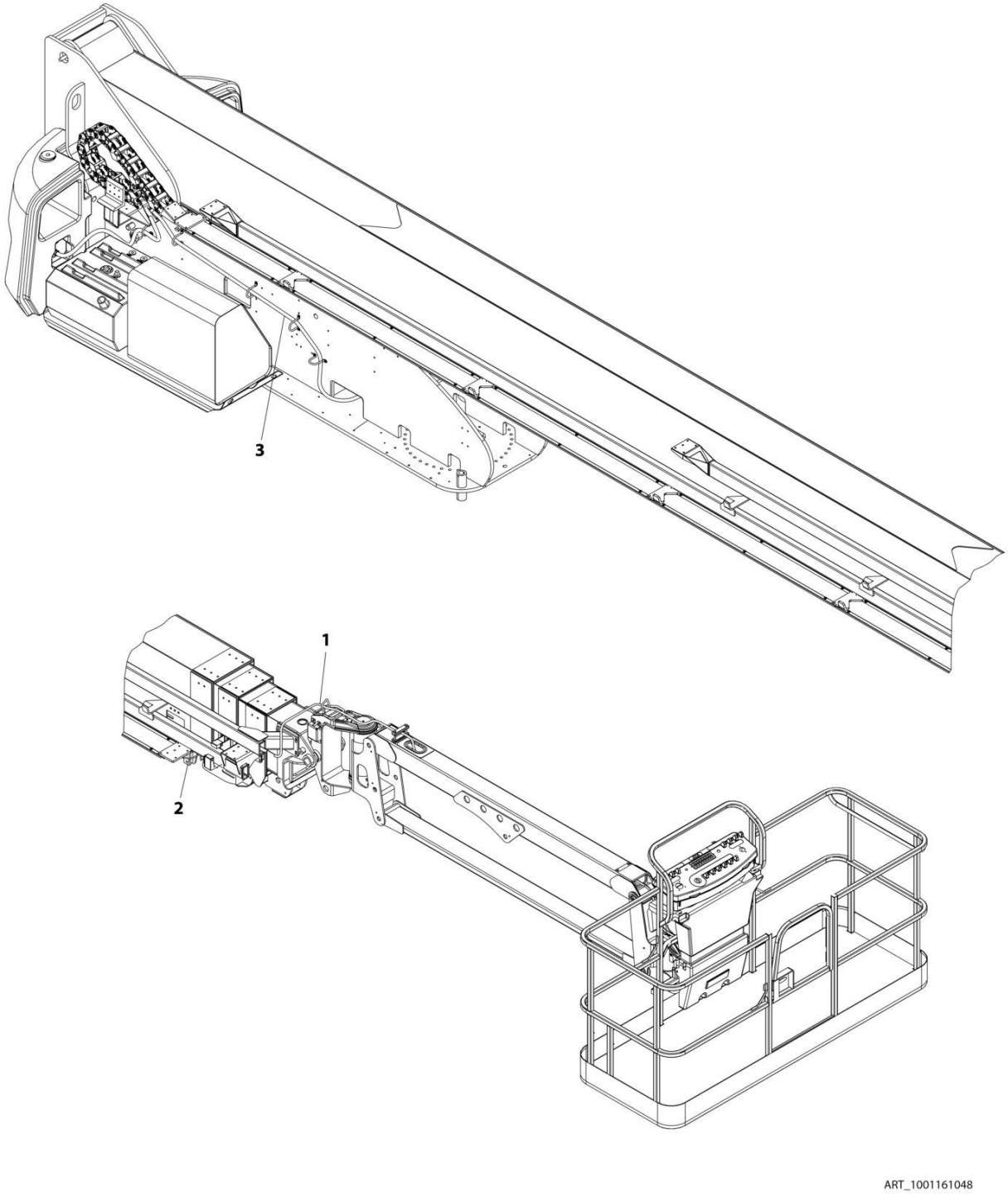

FIGURE 8-30. BOOM CABLES INSTALLATION - WITH 4000W GENERATOR (1200SJP)

ITEM	PART NUMBER	QTY	DESCRIPTION	REV
	1001161048	Ref	BOOM CABLES INSTALLATION	A
1	4922673	1	Harness, Main Boom Control (See Separate Breakdown in this Section)	
2	4922762	1	Harness, 18/3 Transport Switch	
3	1001161041	1	Harness, 8/4 Generator	
3	1001131969	152 ft /46.3m	Cable, Electrical 8/4	

FIGURE 8-31. BOOM CABLES INSTALLATION - WITHOUT AC CABLE (CHINA SPEC) (MACHINES WITH SN STARTING WITH B3) (1350SJP)

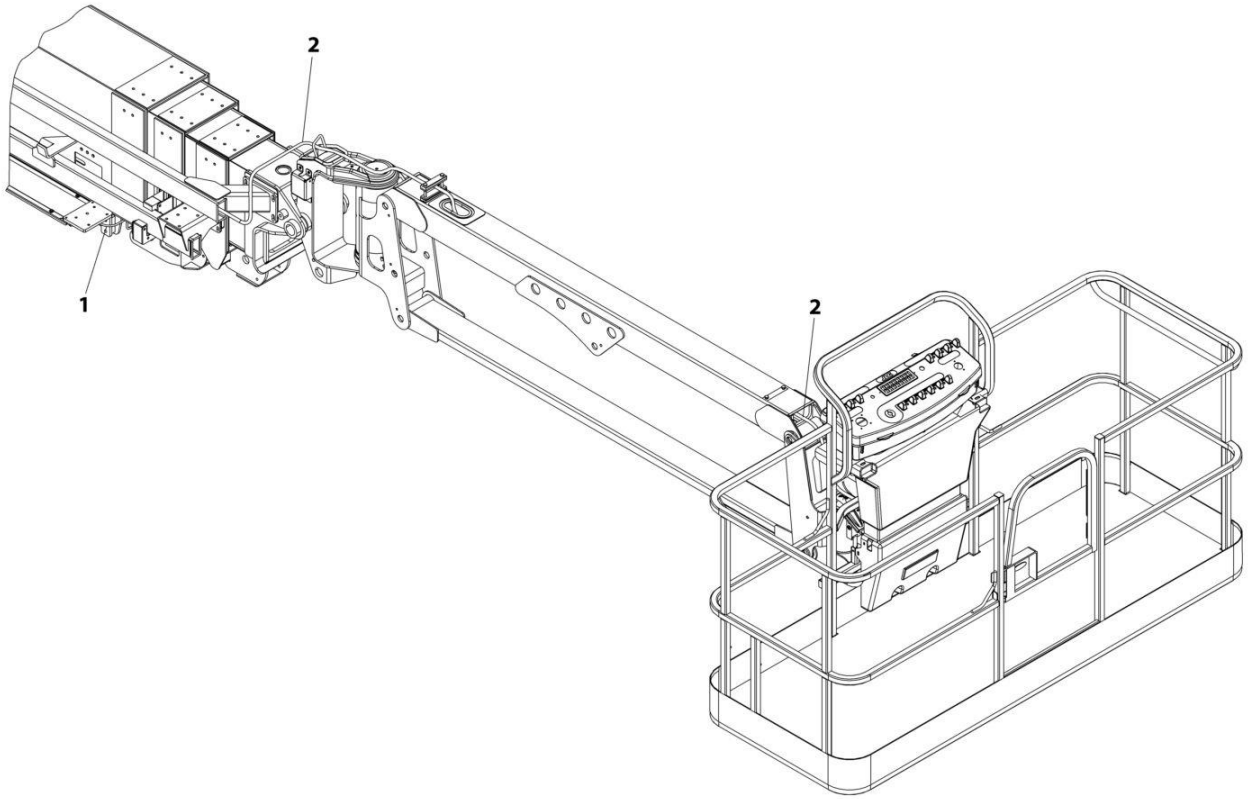

FIGURE 8-31. BOOM CABLES INSTALLATION - WITHOUT AC CABLE (CHINA SPEC) (MACHINES WITH SN STARTING WITH B3) (1350SJP)

ITEM	PART NUMBER	QTY	DESCRIPTION	REV
	1001309598	Ref	BOOM CABLES INSTALLATION - WITHOUT AC CABLE	A
1	4922762	1	Harness, 18/3 Transport Switch	
2	4922673	1	Harness, Main Boom Control (See Separate Breakdown in this Section)	

FIGURE 8-32. BOOM CABLES INSTALLATION - WITHOUT AC CABLE (CHINA SPEC) (MACHINES WITH SN STARTING WITH B3) (1200SJP)

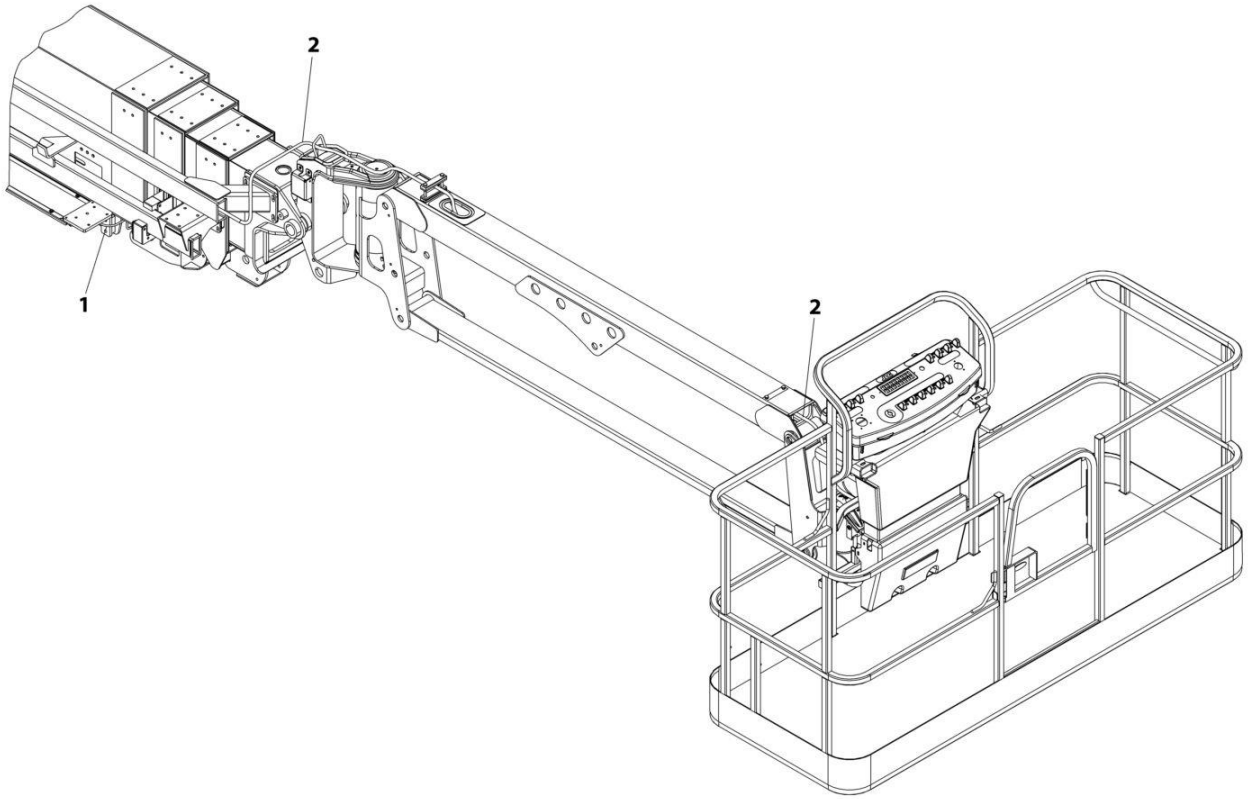

FIGURE 8-32. BOOM CABLES INSTALLATION - WITHOUT AC CABLE (CHINA SPEC) (MACHINES WITH SN STARTING WITH B3) (1200SJP)

ITEM	PART NUMBER	QTY	DESCRIPTION	REV
	1001309599	Ref	BOOM CABLES INSTALLATION - WITHOUT AC CABLE	A
1	4922763	1	Harness, 18/3 Transport Switch	
2	4922672	1	Harness, Main Boom Control (See Separate Breakdown in this Section)	

FIGURE 8-33. BOOM CABLES INSTALLATION - WITH 4000W GENERATOR (1350SJP)

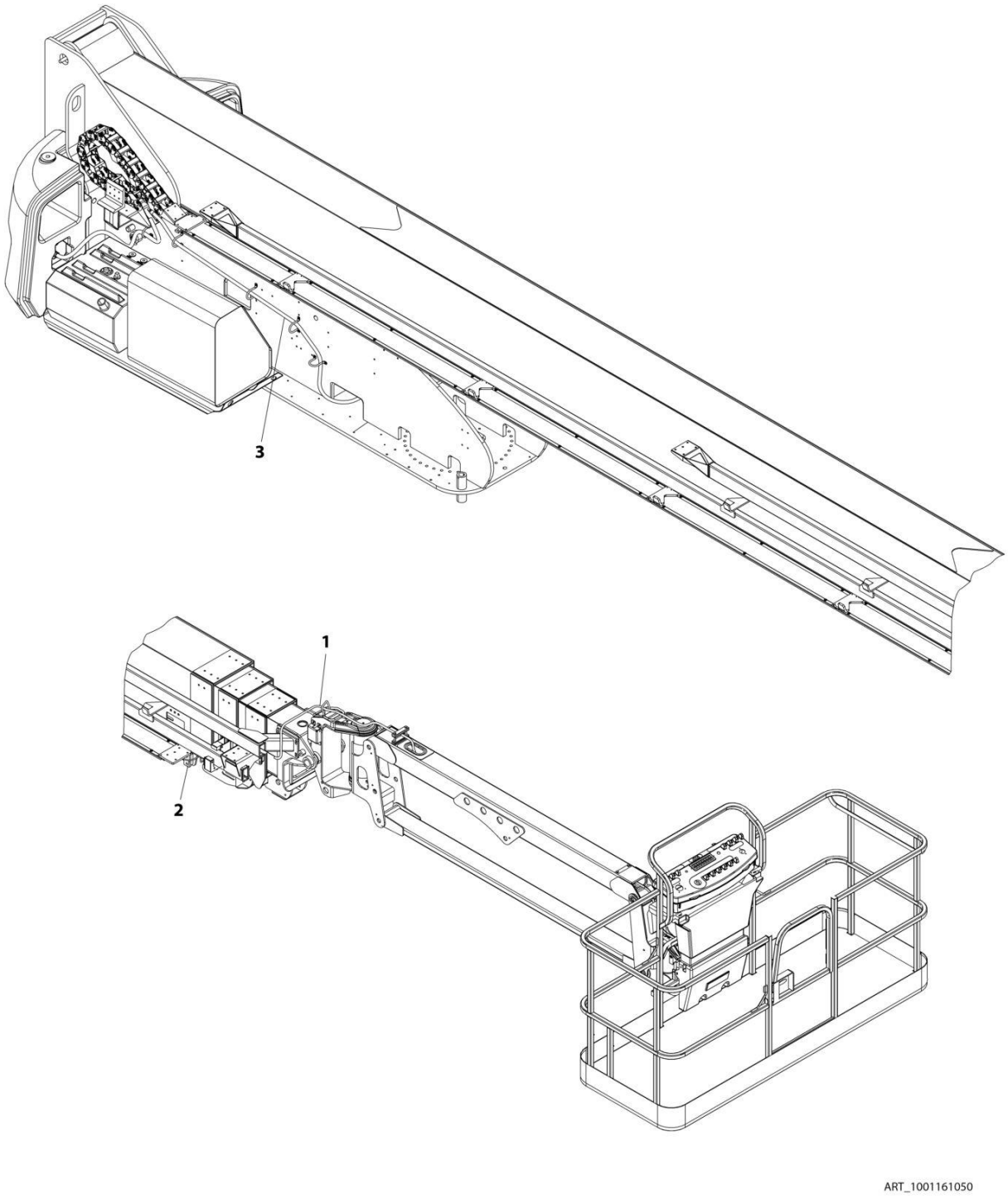

FIGURE 8-33. BOOM CABLES INSTALLATION - WITH 4000W GENERATOR (1350SJP)

ITEM	PART NUMBER	QTY	DESCRIPTION	REV
	1001161050	Ref	BOOM CABLES INSTALLATION	A
1	4922673	1	Harness, Main Boom Control (See Separate Breakdown in this Section)	
2	4922762	1	Harness, 18/3 Transport Switch	
3	1001161044	1	Harness, Generator	
3	1001131969	168 ft /51.2m	Cable, Electrical 8/4	

FIGURE 8-34. BOOM CABLES INSTALLATION - WITH 7500W GENERATOR (1200SJP)

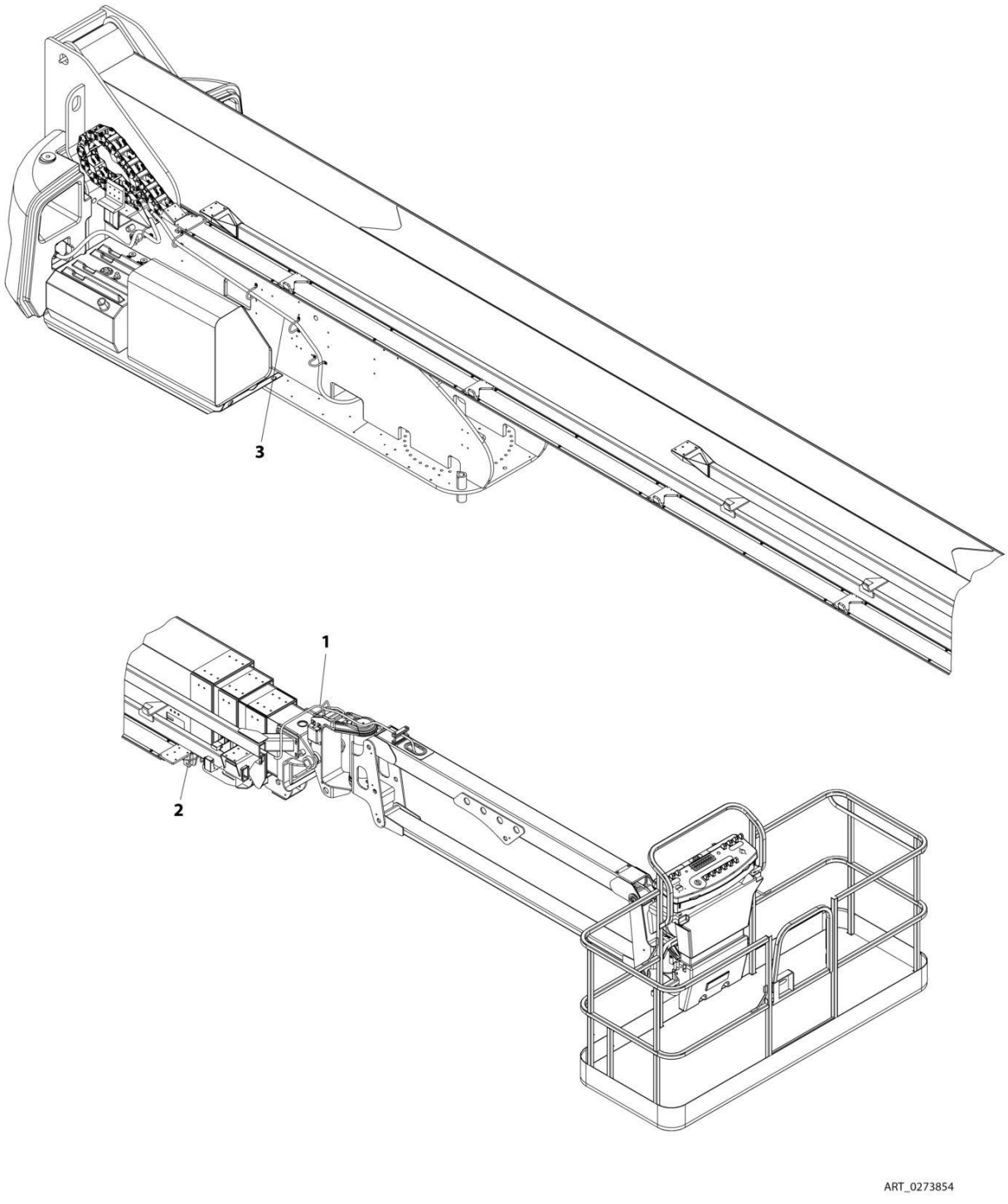

FIGURE 8-34. BOOM CABLES INSTALLATION - WITH 7500W GENERATOR (1200SJP)

ITEM	PART NUMBER	QTY	DESCRIPTION	REV
	0273854	Ref	BOOM CABLES INSTALLATION	A
1	4922672	1	Harness, Main Boom Control (See Separate Breakdown in this Section)	
2	4922763	1	Harness, 18/3 Transport Switch	
3	4922796	1	Harness, Generator	

FIGURE 8-35. BOOM CABLES INSTALLATION - WITH 7500W GENERATOR (1350SJP)

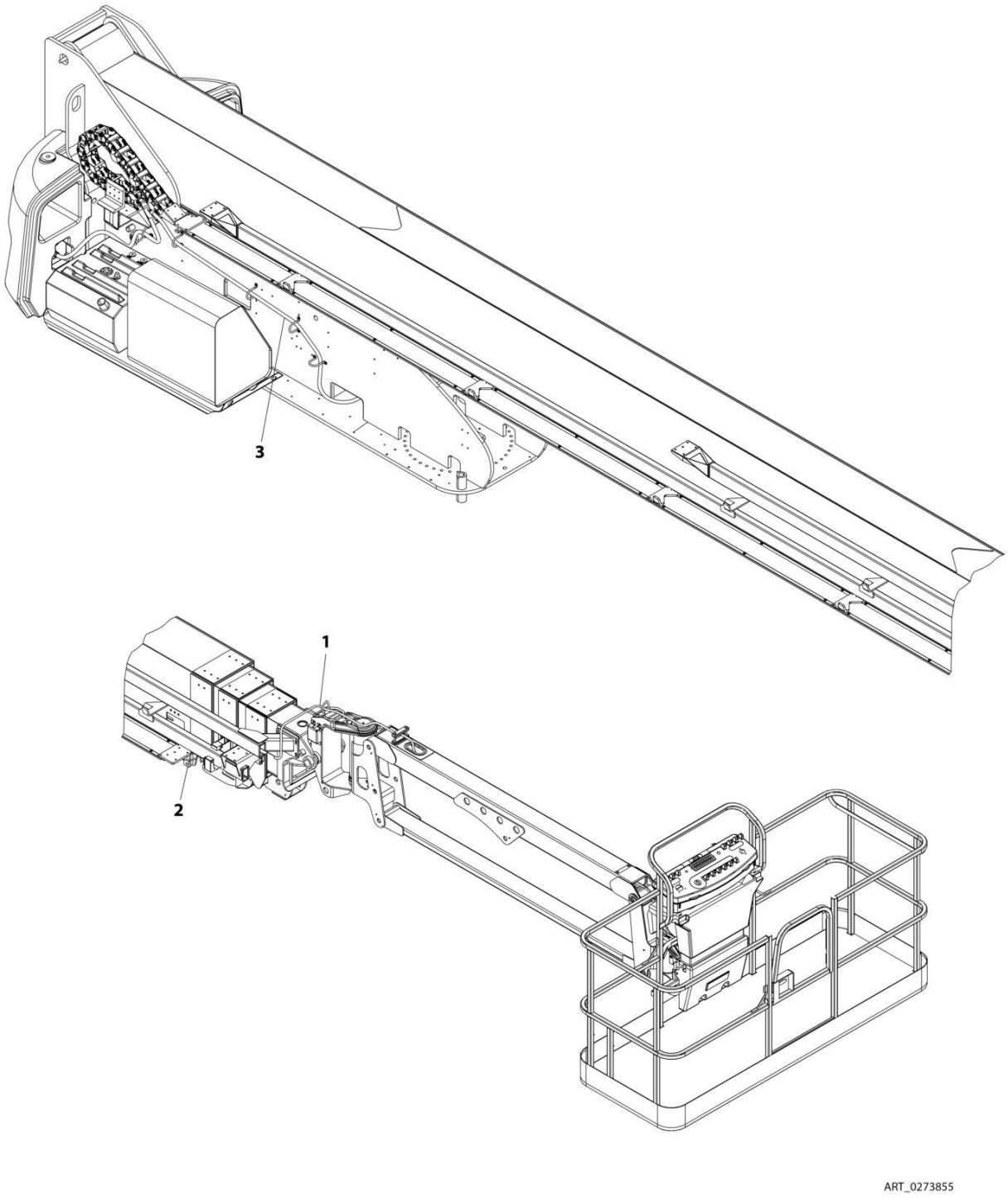

FIGURE 8-35. BOOM CABLES INSTALLATION - WITH 7500W GENERATOR (1350SJP)

ITEM	PART NUMBER	QTY	DESCRIPTION	REV
	0273855	Ref	BOOM CABLES INSTALLATION	A
1	4922673	1	Harness, Main Boom Control (See Separate Breakdown in this Section)	
2	4922762	1	Harness, 18/3 Transport Switch	
3	4922795	1	Harness, Generator	

FIGURE 8-36. BREAKER BOX KIT - 16 AMP (2500W GENERATOR)

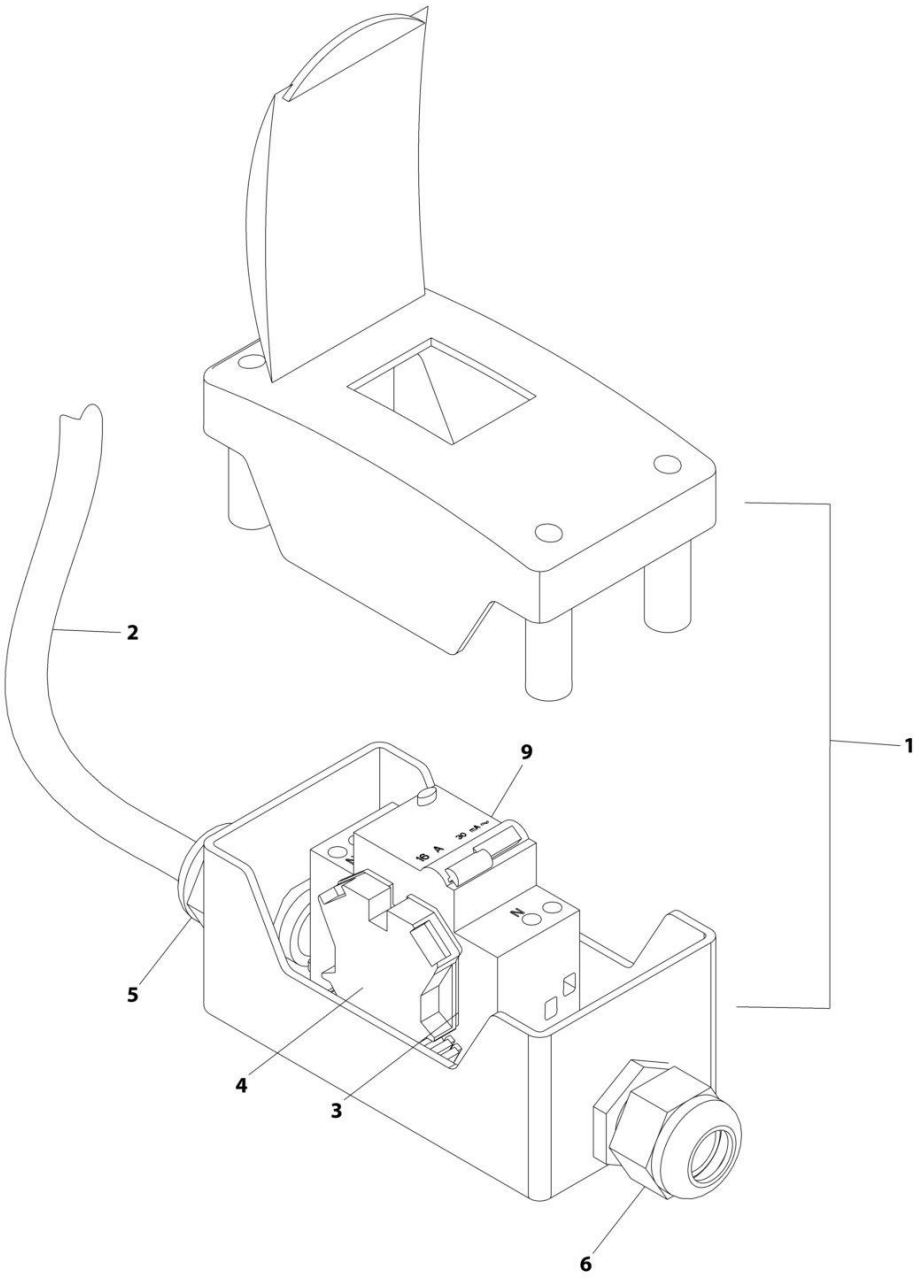

FIGURE 8-36. BREAKER BOX KIT - 16 AMP (2500W GENERATOR)

ITEM	PART NUMBER	QTY	DESCRIPTION	REV
	1001109654	Ref	BREAKER BOX KIT	C
1	0861880	1	Box, Breaker	
2	1060908	12 ft/ 3.6m	Cable 12/3	
3	4460956	1	Barrier, Terminal Block End	
4	4460957	1	Block, Terminal	
5	1001097150	1	Connector, Strain Relief	
6	1001101191	1	Connector, Strain Relief	
9	1001181045	1	Breaker - 30mA/16Amp	
10	1001100231	3	Terminal (Not Shown)	

FIGURE 8-37. BREAKER BOX KIT - 16 AMP (4000W GENERATOR)

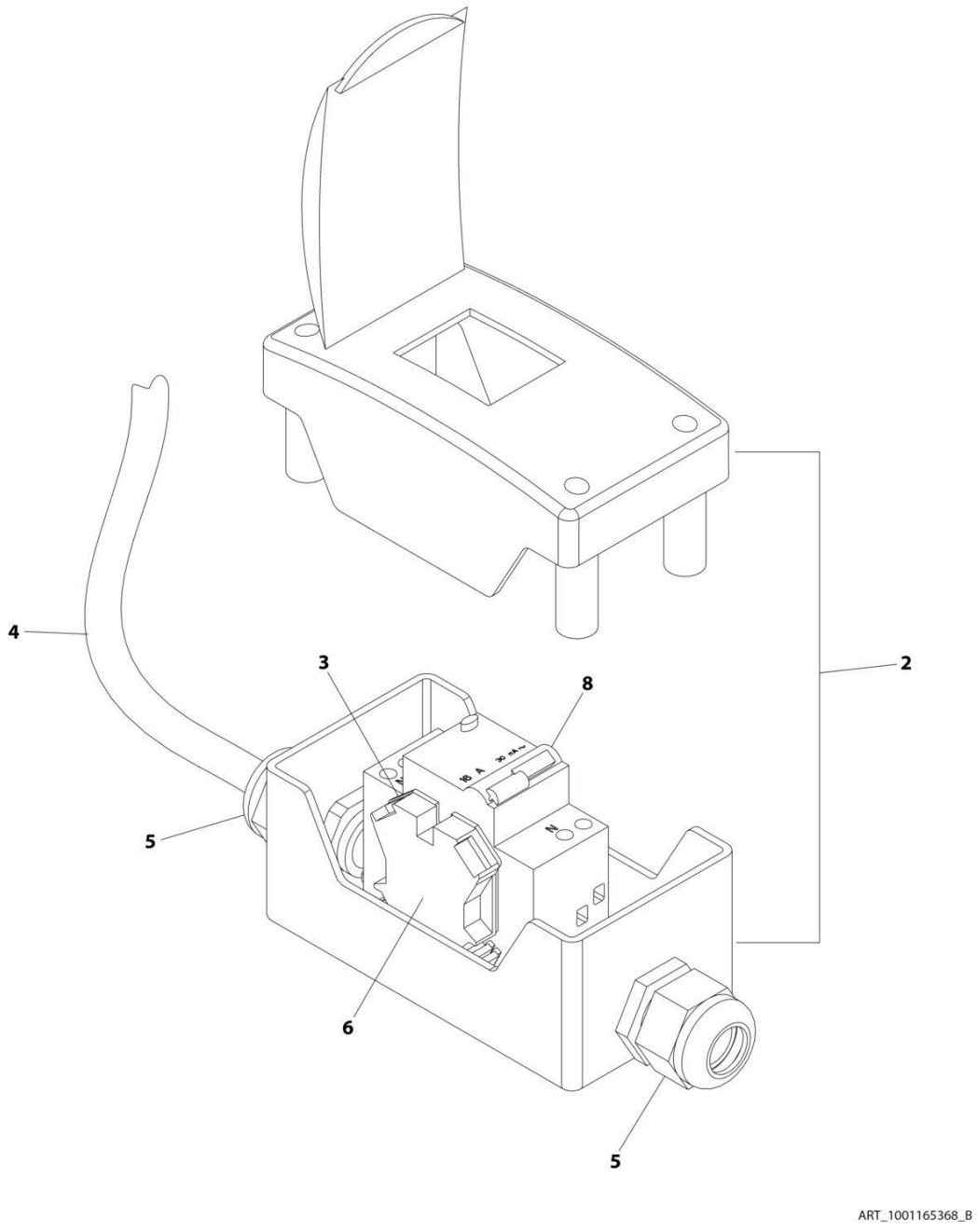

FIGURE 8-37. BREAKER BOX KIT - 16 AMP (4000W GENERATOR)

ITEM	PART NUMBER	QTY	DESCRIPTION	REV
	1001165368	Ref	BREAKER BOX KIT	B
2	0861880	1	Box, Circuit Breaker	
3	4460956	1	Barrier, Terminal Block End	
4	1060545	12 ft/ 3.6m	Cable, Electrical 10/3	
5	1001101191	2	Connector, Strain Relief	
6	4460957	1	Block, Terminal	
8	1001181045	1	Breaker 30mA/16Amp	

FIGURE 8-38. CHASSIS HARNESS ASSEMBLY

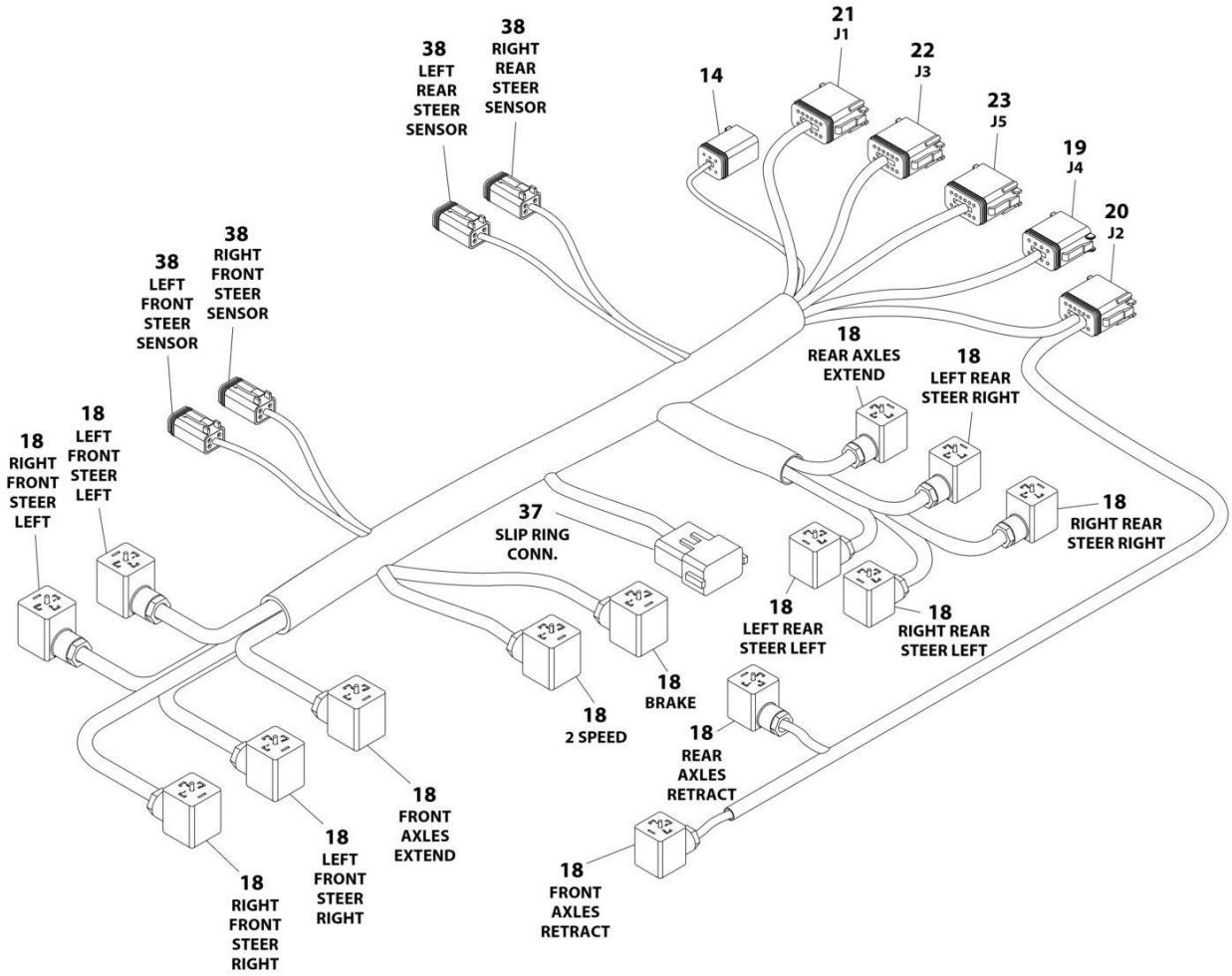

FIGURE 8-38. CHASSIS HARNESS ASSEMBLY

ITEM	PART NUMBER	QTY	DESCRIPTION	REV
	4922696	Ref	CHASSIS HARNESS ASSEMBLY	D
14	4460894	1	Connector - 6 Position	
14	4460465	6	Socket, Female	
14	4460892	1	Connector - 6 Position Buss Bar	
17	4460894	1	Connector - 6 Position (Not Shown)	
17	4460465	6	Socket, Female	
17	4460892	1	Connector - 6 Position Buss Bar	
18	4460880	14	DIN Connector	
19	4460930	1	Connector - 8 Position (Gray)	
19	4460465	1	Socket, Female	
19	4460466	7	Plug, Terminal	
20	4460836	1	Connector - 12 Position (Black)	
20	4460465	6	Socket, Female	
20	4460466	6	Plug, Terminal	
21	4460933	1	Connector - 12 Position (Gray)	
21	4460465	8	Socket, Female	
21	4460466	4	Plug, Terminal	
22	4460934	1	Connector - 12 Position (Green)	
22	4460944	12	Socket, Female	
23	4460935	1	Connector - 12 Position (Brown)	
23	4460465	8	Socket, Female	
25	4240032	10	Tie-Strap (Not Shown)	
26	4240033	15	Tie-Strap (Not Shown)	
37	4460950	1	Connector - 12 Position	
37	4460464	6	Pin, Male	
37	4460943	3	Pin, Male	
37	4460941	2	Pin, Male	
38	4460884	4	Connector - 4 Position (Gray)	
38	4460944	16	Socket, Female	

FIGURE 8-39. CLEARSKY INSTALLATION - 3G CANBUS CONNECTION (ANSI EXPORT, CE, AND UK CA SPECS)

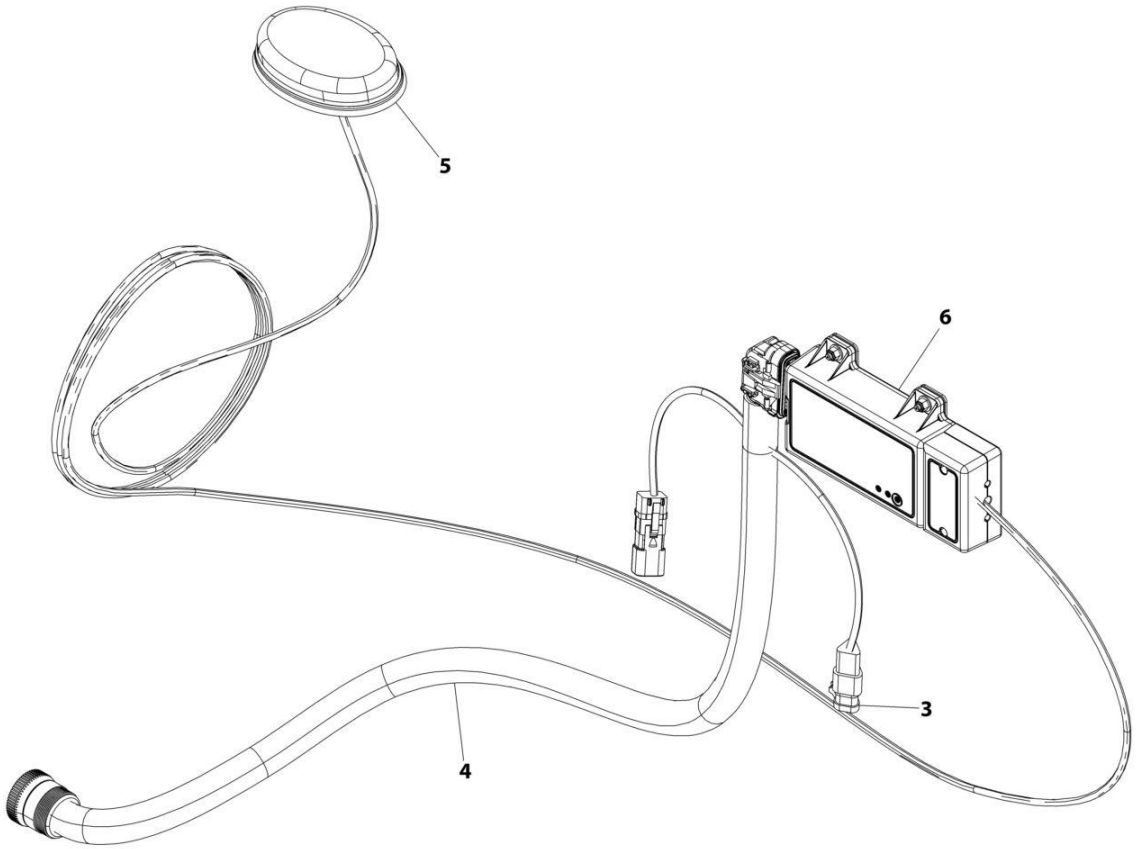

FIGURE 8-39. CLEARSKY INSTALLATION - 3G CANBUS CONNECTION (ANSI EXPORT, CE, AND UK CA SPECS)

ITEM	PART NUMBER	QTY	DESCRIPTION	REV
	1001228951	Ref	CLEARSKY INSTALLATION CANBUS CONNECTION	A
1	4240032	AR	Tie-Strap (Not Shown)	
2	4460234	AR	Strap, Cable -Tie (Not Shown)	
3	1001129408	1	Connector	
4	1001226739	1	ClearSky Harness (See Separate Breakdown in this Section)	
5	1001226799	1	Antenna	
6	1001228954	1	Telematics Control Module (Note: Re-calibration Required when Replaced)	

FIGURE 8-40. CLEARSKY INSTALLATION - 3G CANBUS CONNECTION (AUSTRALIAN SPECS)

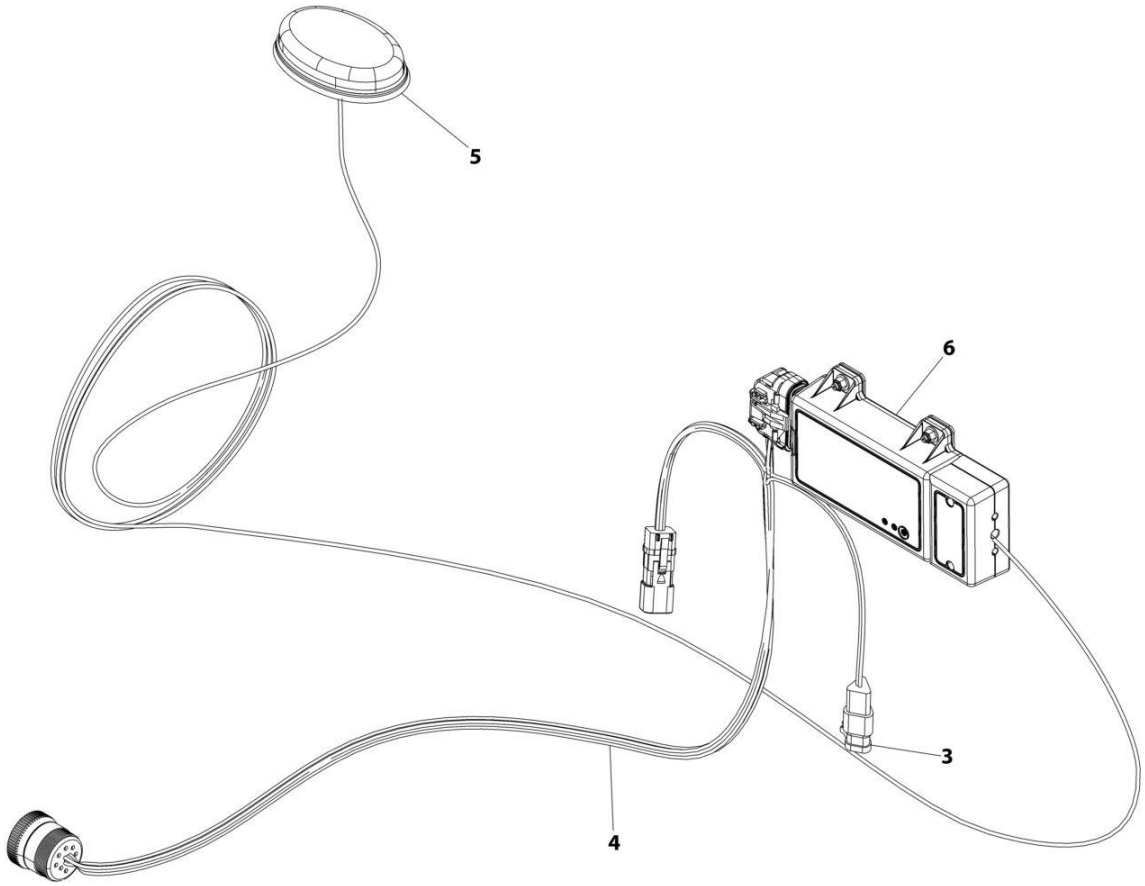

FIGURE 8-40. CLEARSKY INSTALLATION - 3G CANBUS CONNECTION (AUSTRALIAN SPECS)

ITEM	PART NUMBER	QTY	DESCRIPTION	REV
	1001246136	Ref	CLEARSKY INSTALLATION CANBUS CONNECTION	A
1	4240032	AR	Tie-Strap (Not Shown)	
2	4460234	AR	Strap, Cable -Tie (Not Shown)	
3	1001129408	1	Connector	
4	1001226739	1	ClearSky Harness (See Separate Breakdown in this Section)	
5	1001226799	1	Antenna	
6	1001246144	1	Telematics Control Module (Note: Re-calibration Required when Replaced)	

FIGURE 8-41. CLEARSKY INSTALLATION - 4G CANBUS CONNECTION (ALL SPECS EXCEPT CHINA SPECS)

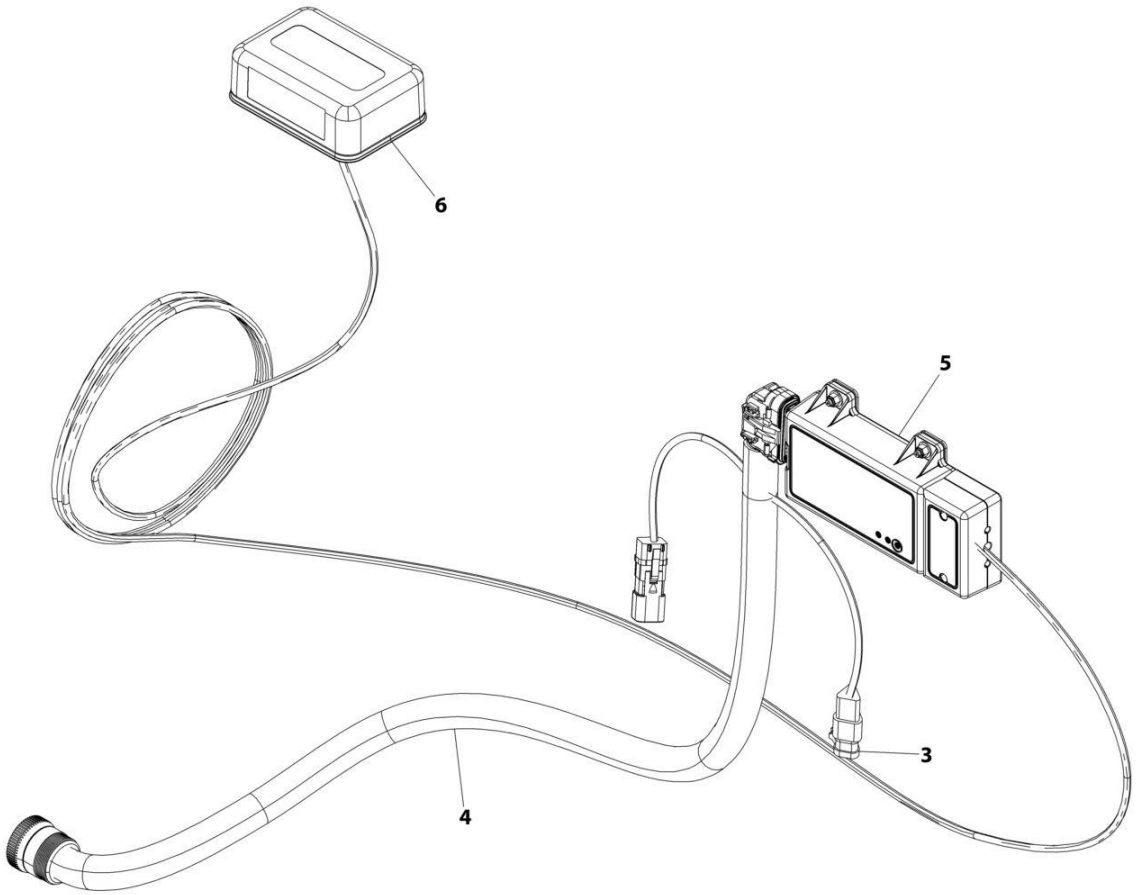

FIGURE 8-41. CLEARSKY INSTALLATION - 4G CANBUS CONNECTION (ALL SPECS EXCEPT CHINA SPECS)

ITEM	PART NUMBER	QTY	DESCRIPTION	REV
	1001227449	REF	CLEARSKY INSTALLATION CANBUS CONNECTION	B
1	4240032	AR	Tie-Strap (Not Shown)	
2	4460234	AR	Strap, Cable -Tie (Not Shown)	
3	1001129408	1	Connector	
4	1001226739	1	ClearSky Harness (See Separate Breakdown in this Section)	
5	1001262322	1	Telematics Control Module (Note: Re-calibration Required when Replaced)	
6	1001262327	1	Antenna	

FIGURE 8-42. CLEARSKY INSTALLATION - 4G CANBUS CONNECTION (CHINA SPECS)

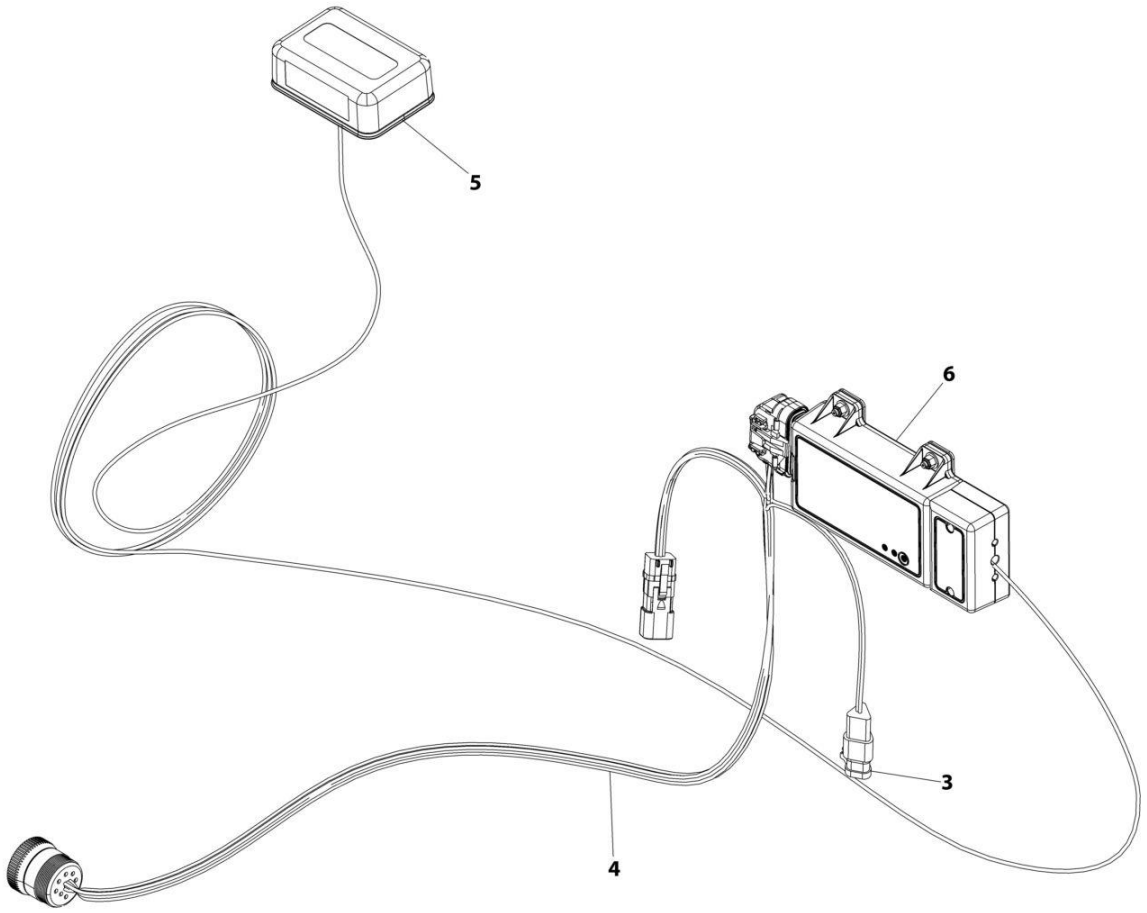

ART_1001246137

FIGURE 8-42. CLEARSKY INSTALLATION - 4G CANBUS CONNECTION (CHINA SPECS)

ITEM	PART NUMBER	QTY	DESCRIPTION	REV
	1001246137	Ref	CLEARSKY INSTALLATION CANBUS CONNECTION	A
1	4240032	AR	Tie-Strap (Not Shown)	
2	4460234	AR	Strap, Cable -Tie (Not Shown)	
3	1001129408	1	Connector	
4	1001226739	1	ClearSky Harness (See Separate Breakdown in this Section)	
5	1001226799	1	Antenna	
6	1001246145	1	Telematics Control Module (Note: Re-calibration Required when Replaced)	

FIGURE 8-43. CLEARSKY INSTALLATION - 3 WIRE GT1030 (ALL SPECS EXCEPT CHINA SPECS)

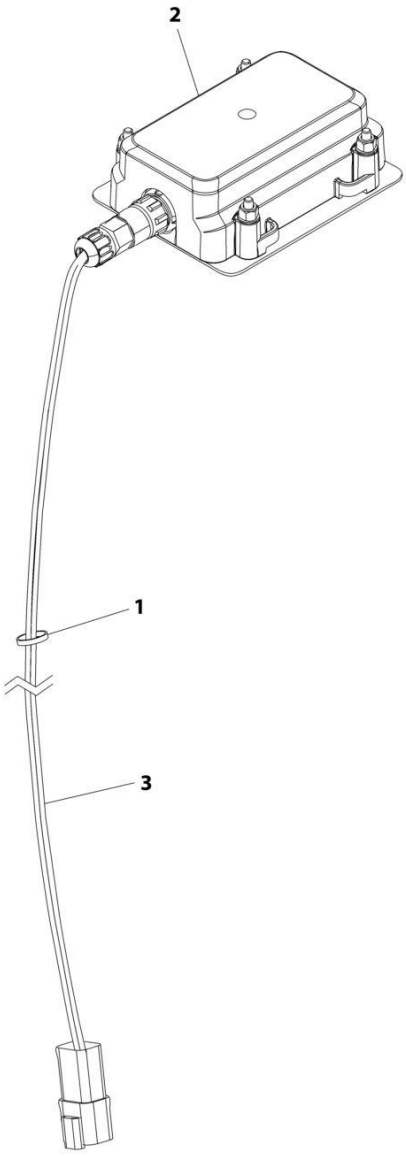

ART_1001276610

FIGURE 8-43. CLEARSKY INSTALLATION - 3 WIRE GT1030 (ALL SPECS EXCEPT CHINA SPECS)

ITEM	PART NUMBER	QTY	DESCRIPTION	REV
	1001276610	Ref	CLEARSKY INSTALLATION 3-WIRE CONNECTION	A
1	4240032	AR	Tie-Strap	
2	1001272659	1	Telematics Control Module Assembly (Note: Re-calibration Required when Replaced)	
3	1001273012	1	ClearSky Harness (See Separate Breakdown in this Section)	

FIGURE 8-44. CLEARSKY INSTALLATION - WITH DEUTZ TD2.9L4 (CHINA IV) ENGINES (CHINA SPECS)

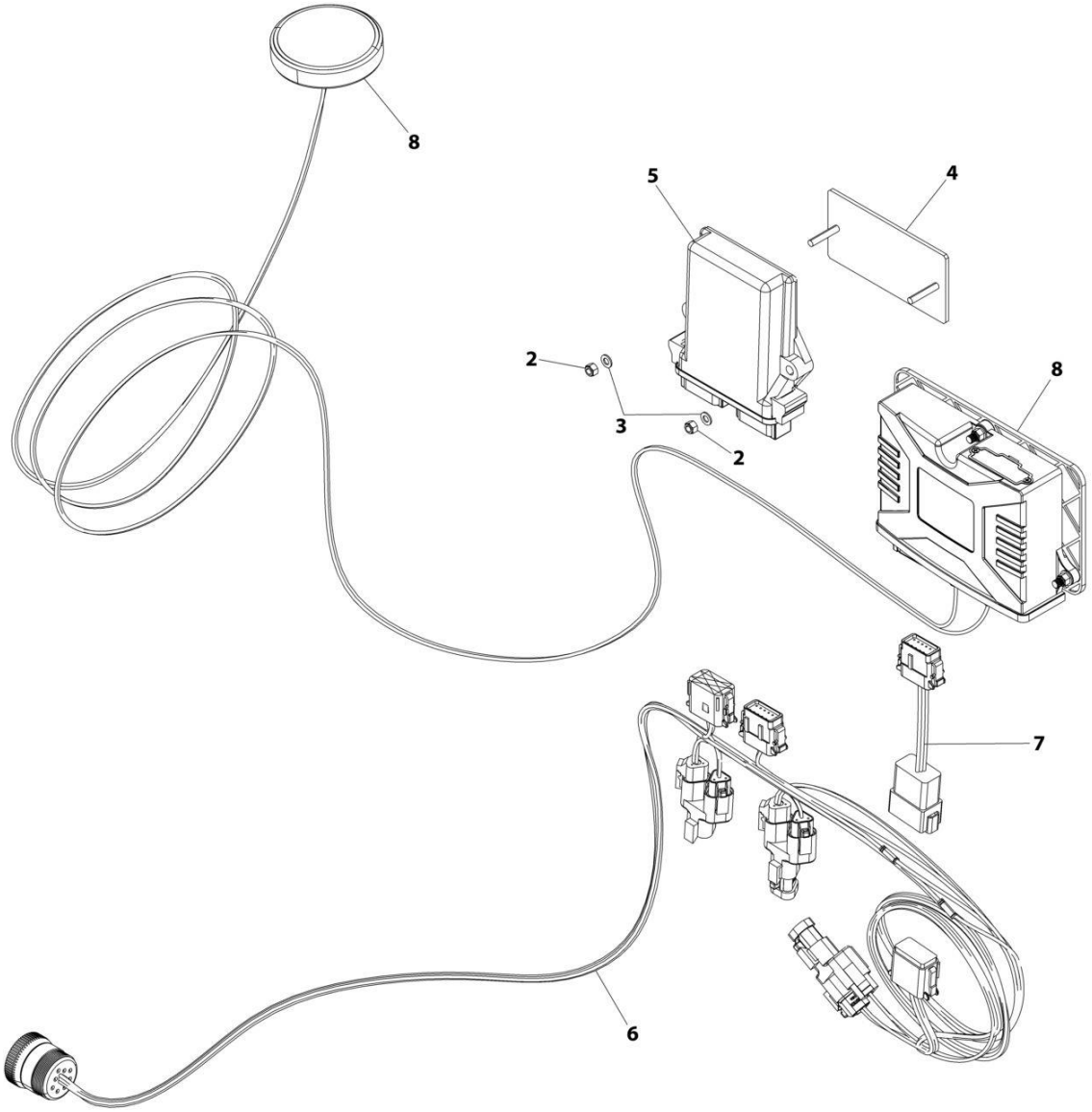

FIGURE 8-44. CLEARSKY INSTALLATION - WITH DEUTZ TD2.9L4 (CHINA IV) ENGINES (CHINA SPECS)

ITEM	PART NUMBER	QTY	DESCRIPTION	REV
	1001289702	Ref	CLEARSKY INSTALLATION	C
1	1062255	AR	Tie-Strap (Not Shown)	
2	3290505	2	Nut, Lock M5	
3	4811600	2	Washer M5	
4	1001219082	1	Bracket	
5	1001229458	1	Gateway Controller	
6	1001226831	1	ClearSky Harness (See Separate Breakdown in this Section)	
7	1001282406	1	Telematics Jumper Harness (See Separate Breakdown in this Section)	
8	1001289138	1	Telematics Control Module Assembly (Note: Re-calibration Required when Replaced) (See Separate Breakdown in this Section)	
9	1001244462	1	Connector, Cap	

FIGURE 8-45. CLEARSKY HARNESS - 3G & 4G CANBUS CONNECTIONS

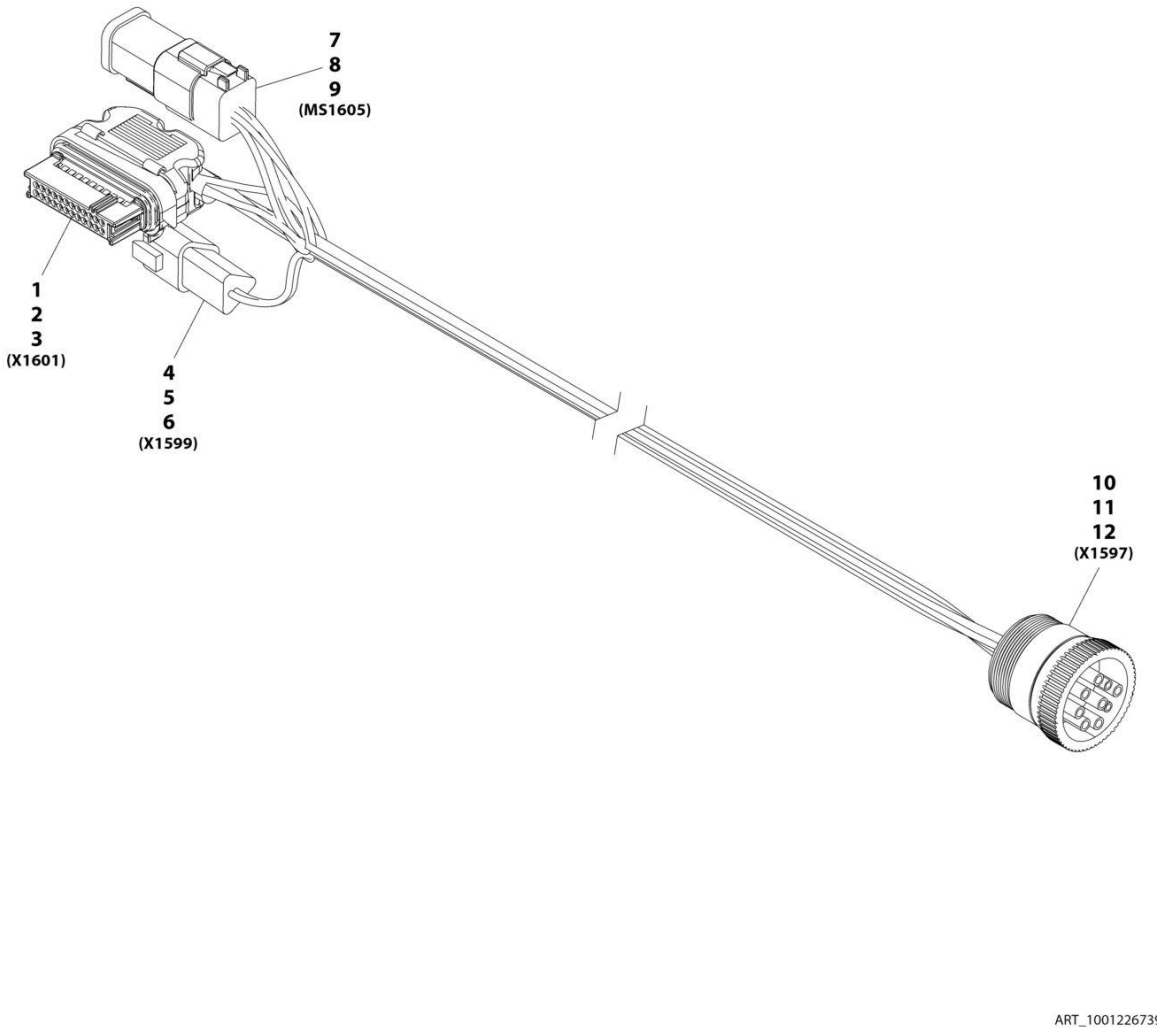

FIGURE 8-45. CLEARSKY HARNESS - 3G & 4G CANBUS CONNECTIONS

ITEM	PART NUMBER	QTY	DESCRIPTION	REV
	1001226739	Ref	Clearsky Harness	A
1	1001226636	1	Connector	
2	1001116731	16	Plug, Terminal	
3	1001226637	8	Terminal	
4	1001144147	1	Connector	
5	4460464	2	Terminal	
6	4460466	1	Plug, Terminal	
7	4460894	1	Connector	
8	4460465	6	Terminal	
9	1001226541	1	Connector- 6 Pin Bussbar	
10	1001112796	1	Connector	
11	4460465	8	Terminal	
12	4460466	1	Plug, Terminal	

FIGURE 8-46. CLEARSKY HARNESS - 3 WIRE GT1030

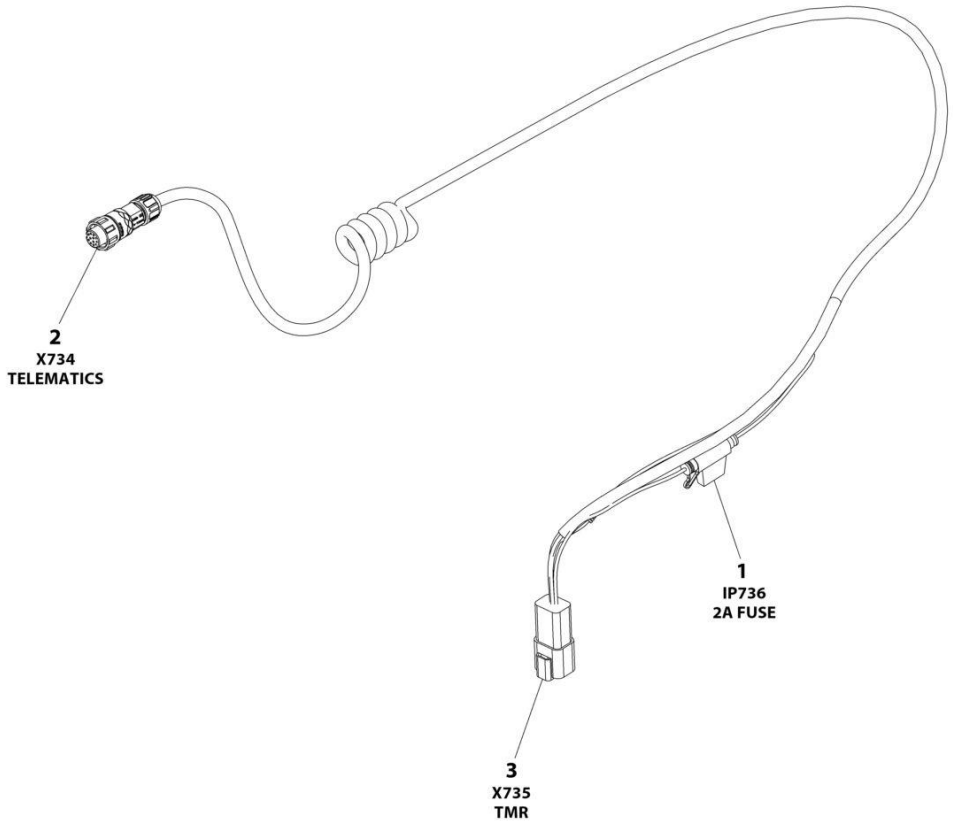

FIGURE 8-46. CLEARSKY HARNESS - 3 WIRE GT1030

ITEM	PART NUMBER	QTY	DESCRIPTION	REV
	1001273012	Ref	CLEARSKY TELEMATICS HARNESS - GT1030	D
1	1001255901	1	Fuseholder	
1	1001196634	1	Fuse - 2Amp	
2	1001272997	1	Connector - 12 Position	
2		Ref	Terminal	
3	4460932	1	Receptacle, Female - 4 Position	
3	4460464	4	Pin, Male	

FIGURE 8-47. CLEARSKY HARNESS - WITH DEUTZ TD2.9L4 (CHINA IV) ENGINES

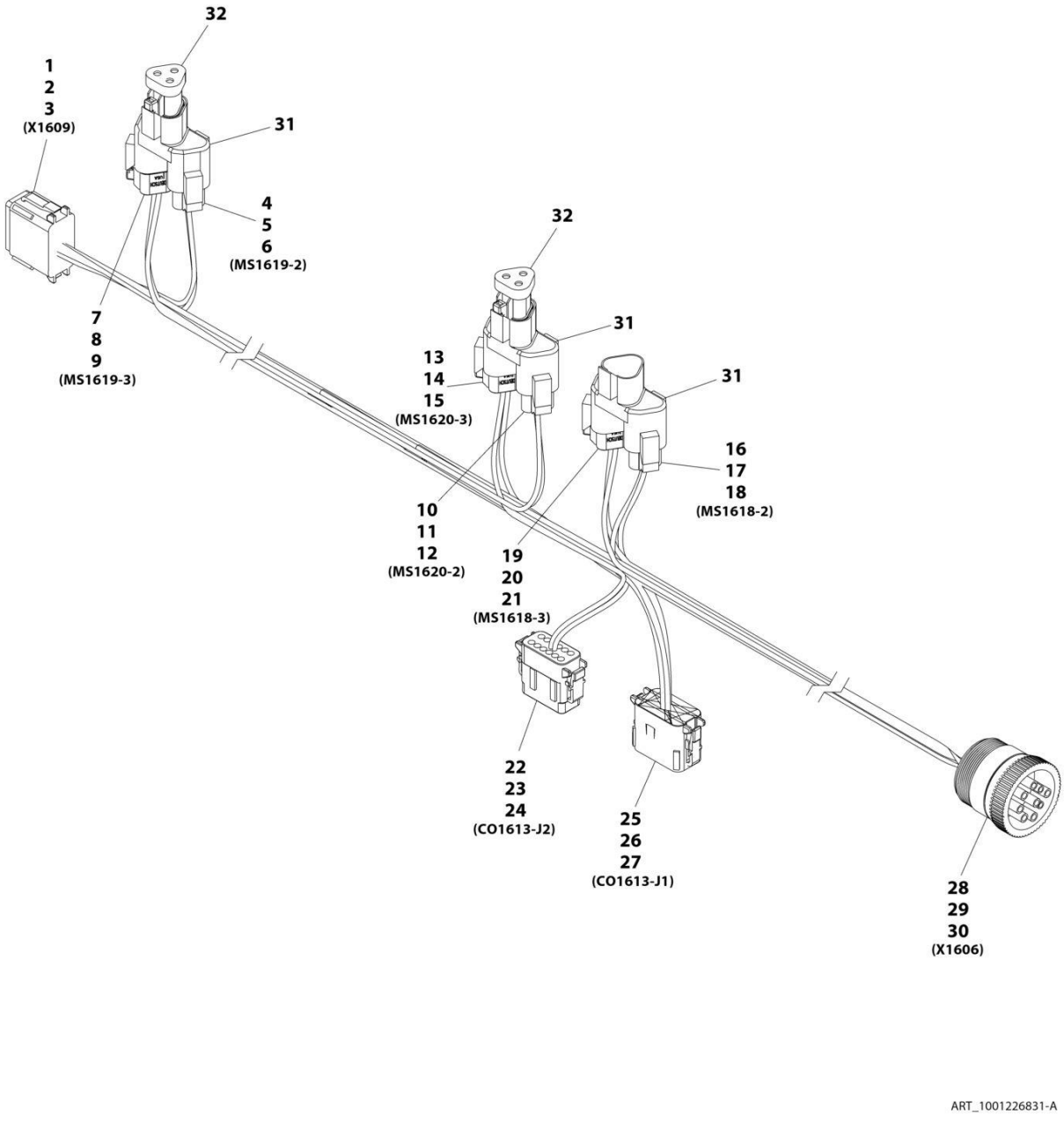

FIGURE 8-47. CLEARSKY HARNESS - WITH DEUTZ TD2.9L4 (CHINA IV) ENGINES

ITEM	PART NUMBER	QTY	DESCRIPTION	REV
	1001226831	Ref	Telematics Gateway Harness	A
1	4460933	1	Connector	
2	1001116692	5	Terminal	
3	4460466	7	Plug	
4	4460539	1	Connector	
5	4460465	2	Terminal	
6	4460466	1	Plug	
7	1001116812	1	Connector	
8	4460465	2	Terminal	
9	4460466	1	Plug	
10	4460539	1	Connector	
11	4460465	2	Terminal	
12	4460466	1	Plug	
13	1001116812	1	Connector	
14	4460465	2	Terminal	
15	4460466	1	Plug	
16	4460539	1	Connector	
17	4460465	2	Terminal	
18	4460466	1	Plug	
19	1001116812	1	Connector	
20	4460465	2	Terminal	
21	4460466	1	Plug	
22	1001116808	1	Connector	
23	1001116694	2	Terminal	
24	4460518	10	Plug	
25	1001116774	1	Connector	
26	1001116694	4	Terminal	
27	4460518	8	Plug	
28	1001112796	1	Connector	
29	1001116692	5	Terminal	
30	4460466	3	Plug	
31	4460945	3	Terminal, 3 Way "T" Receptacle	
32	1001116815	2	Connector, Plug 3-Pin	

FIGURE 8-48. CLEARSKY TELEMATICS JUMPER HARNESS

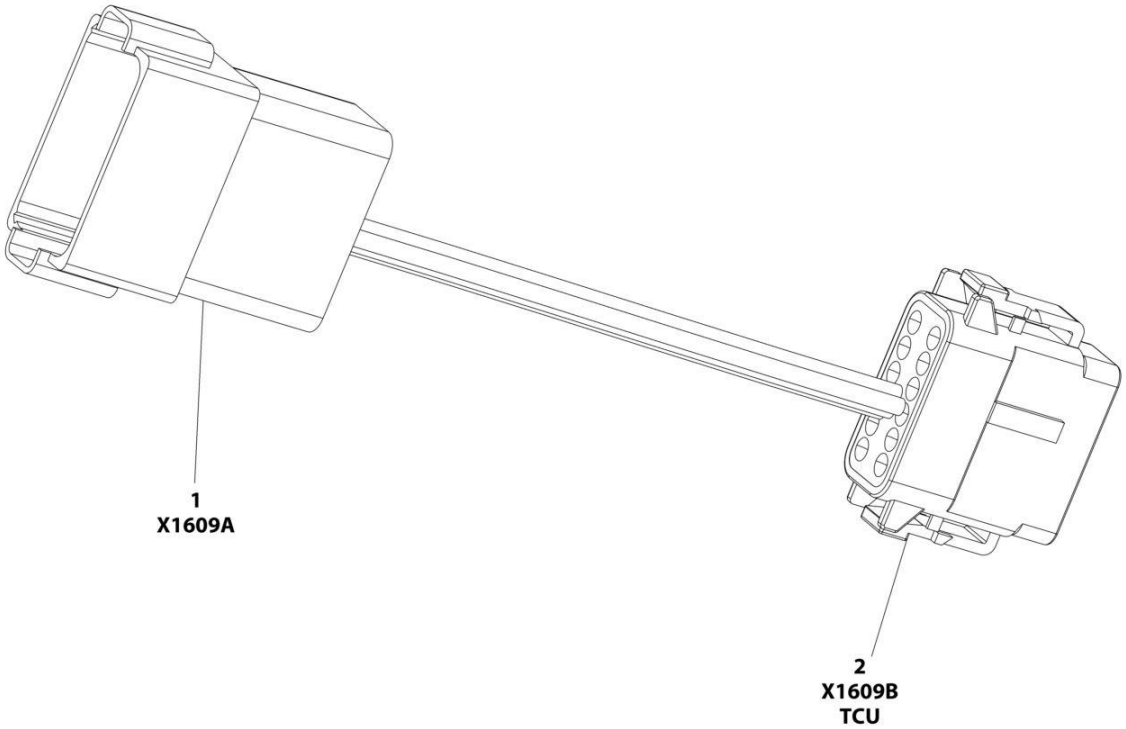

FIGURE 8-48. CLEARSKY TELEMATICS JUMPER HARNESS

ITEM	PART NUMBER	QTY	DESCRIPTION	REV
	1001282406	REF	TELEMATICS JUMPER HARNESS	B
1	4460970	1	Connector	
1	1001116693	5	Socket	
1	4460466	7	Plug, Sealing	
2	1001116774	1	Connector	
2	4460518	5	Plug Sealing	
2	1001116694	7	Socket	

FIGURE 8-49. TELEMATICS CONTROL MODULE ASSEMBLY

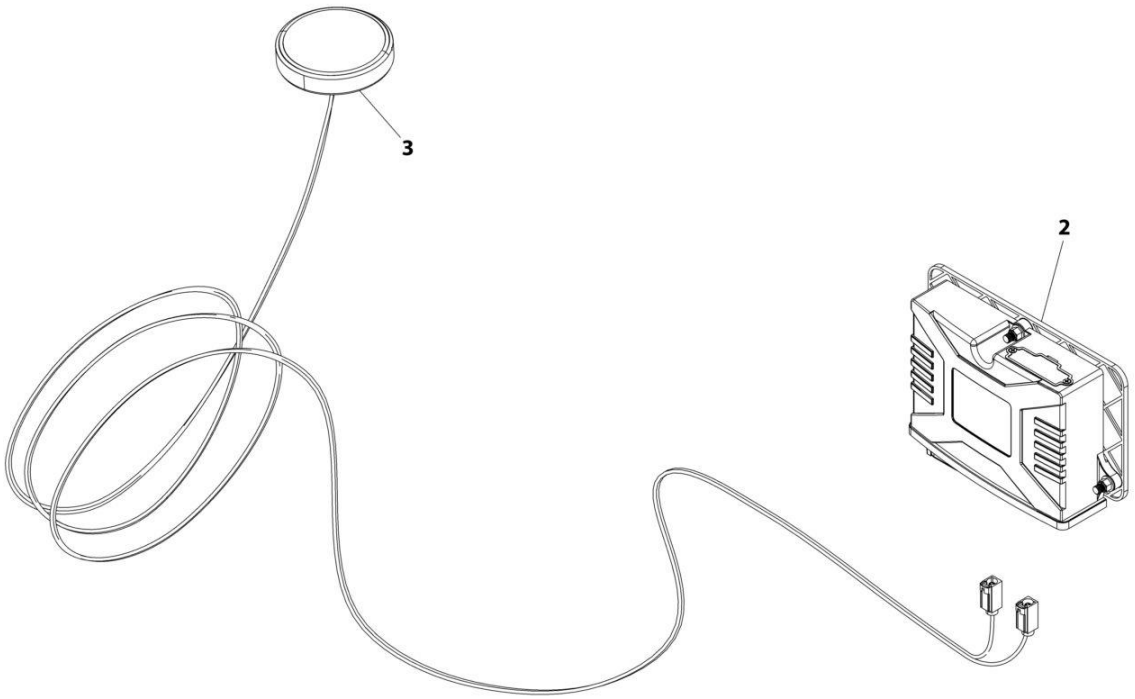

FIGURE 8-49. TELEMATICS CONTROL MODULE ASSEMBLY

ITEM	PART NUMBER	QTY	DESCRIPTION	REV
	1001289138	Ref	CLEARSKY CONTROL MODULE ASSEMBLY	A
2	1001289140	1	ClearSky Control Module	
3	1001289199	1	Antenna	

FIGURE 8-50. CLEARSKY READY HARNESS

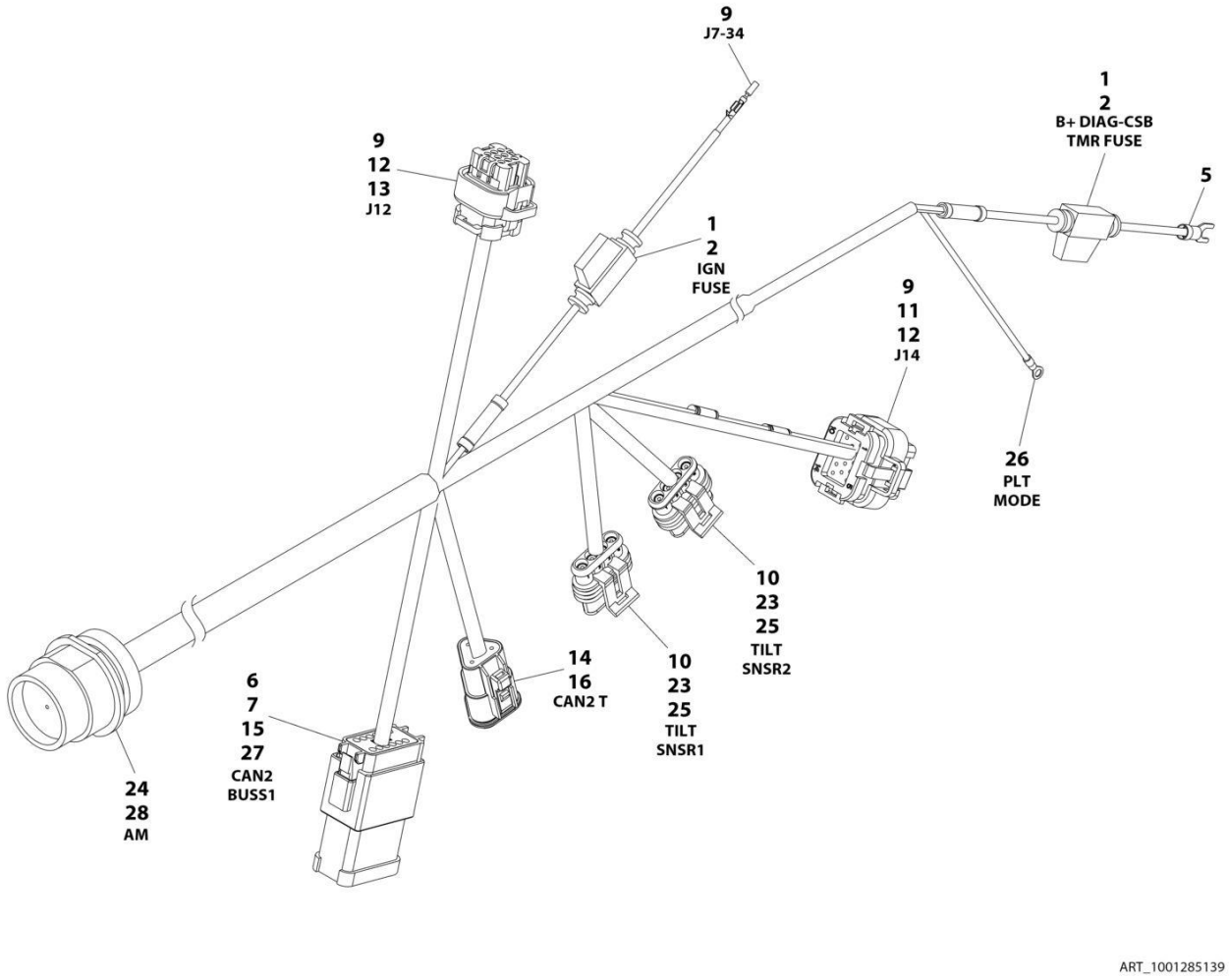

FIGURE 8-50. CLEARSKY READY HARNESS

ITEM	PART NUMBER	QTY	DESCRIPTION	REV
	1001285139	Ref	CLEARSKY READY HARNESS	B
1	2400060	2	Fuseholder with Cover	
2	2400064	2	Fuse 5Amp	
5	4460183	1	Terminal, Fork	
5	4460144	1	Terminal, Fork	
6	4460933	1	Connector	
7	4460465	9	Socket	
9	4460871	15	Socket	
10	1001103012	2	Connector	
11	1001246859	1	Connector	
12	4460905	8	Plug	
13	1001113961	1	Connector	
14	1001116812	1	Connector	
15	1001119020	1	Connector	
16	4460944	3	Pin	
23	1001104498	8	Seal	
24	1001109484	1	Connector	
24	1001201081	1	Connector	
25	1001107854	8	Socket	
26	4460313	1	Terminal, Ring	
27	4460466	3	Plug	
28	4460464	12	Pin	

FIGURE 8-51. DIAGNOSTIC HARNESS

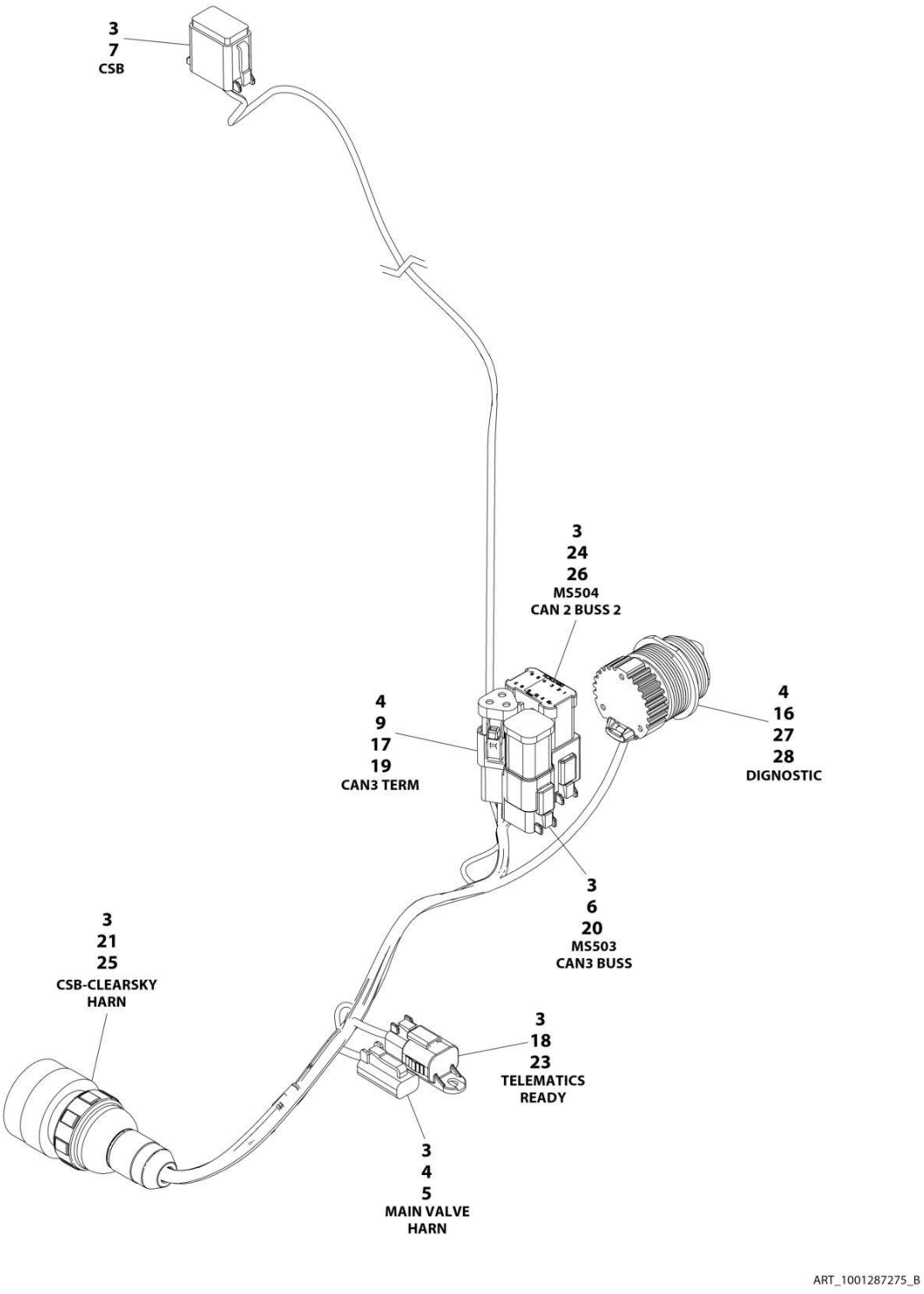

FIGURE 8-51. DIAGNOSTIC HARNESS

ITEM	PART NUMBER	QTY	DESCRIPTION	REV
	1001287275	Ref	CSB HARNESS	B
3	4460465	43	Socket	
4	4460466	5	Plug	
5	4460891	1	Connector	
6	4460894	1	Connector	
7	4460930	1	Connector	
9	4460943	2	Pin	
16	1001112612	1	Connector	
17	1001116815	1	Connector	
18	1001192401	1	Connector	
19	1001144147	1	Pin	
20	1001226541	1	Connector	
21	4461042	1	Connector	
23	4460884	1	Connector	
24	4460933	1	Connector	
25	1001109485	1	Connector	
26	1001119020	1	Connector	
27	1001106736	1	Cap, Dust	
28	4460464	6	Pin	

FIGURE 8-52. DUAL CAPACITY JIB POSITION SWITCH HARNESS

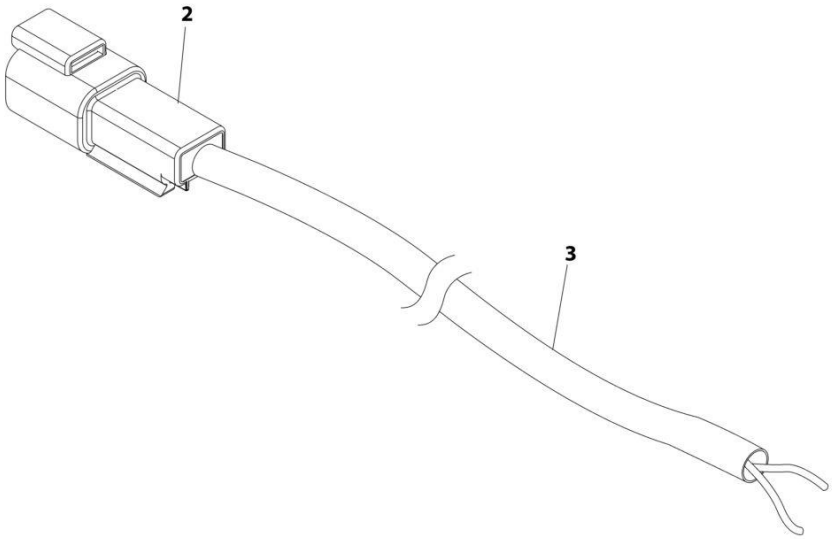

ART_4922785

FIGURE 8-52. DUAL CAPACITY JIB POSITION SWITCH HARNESS

ITEM	PART NUMBER	QTY	DESCRIPTION	REV
	4922785	Ref	DUAL CAPACITY JIB POSITION SWITCH HARNESS	C
2	4460897	1	Connector - 2 Position	
2	4460464	2	Pin, Male	
3	1060902	15 ft/ 4.5m	Cable, Electrical 18/2	

FIGURE 8-53. ENGINE HARNESS - DEUTZ TD2011 ENGINES AND DEUTZ TD2.9L4 ENGINES

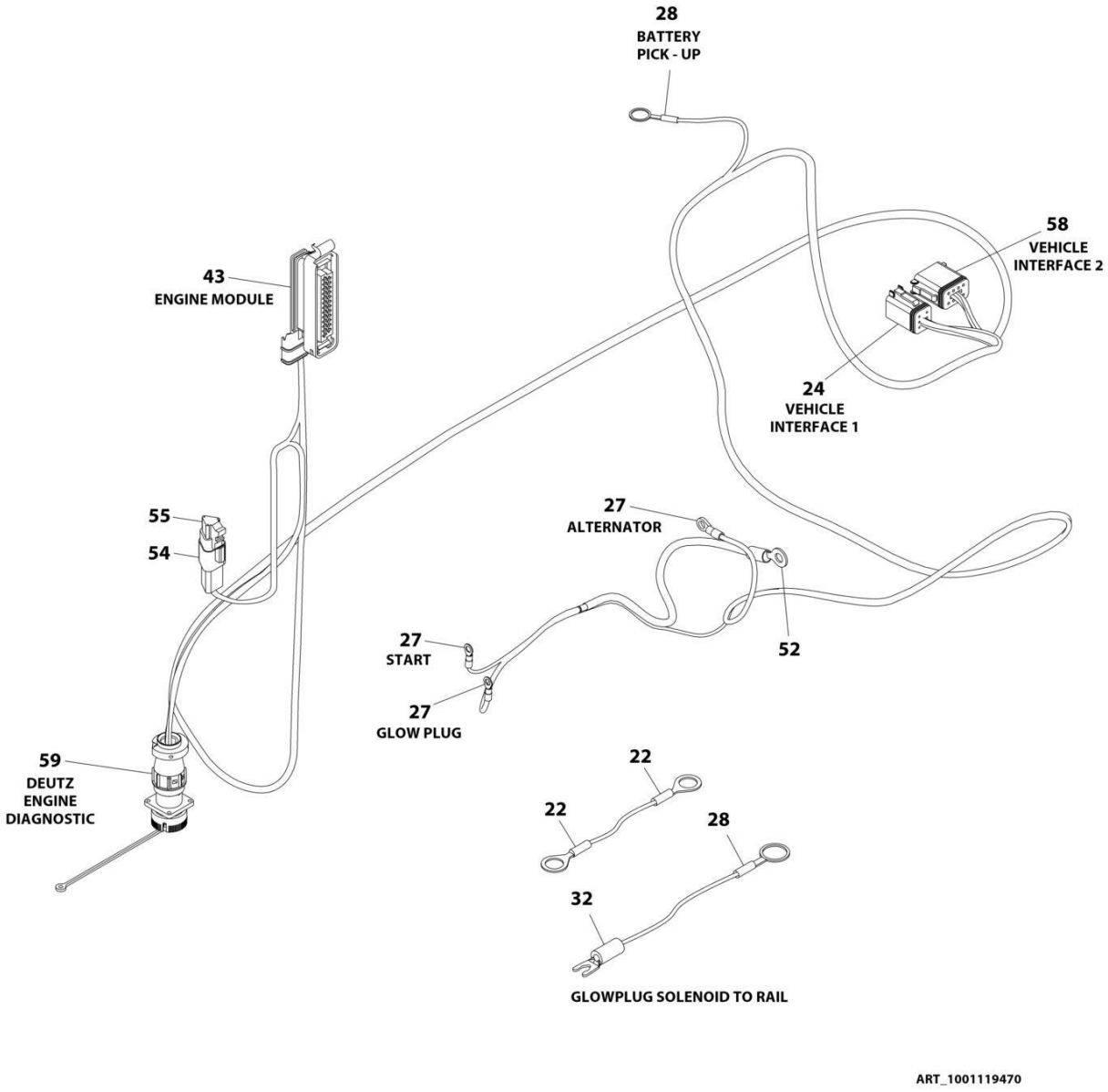

FIGURE 8-53. ENGINE HARNESS - DEUTZ TD2011 ENGINES AND DEUTZ TD2.9L4 ENGINES

ITEM	PART NUMBER	QTY	DESCRIPTION	REV
	1001119470	Ref	ENGINE HARNESS - DEUTZ TD2011 ENGINES	B
22	4460702	2	Terminal, Eyelet	
24	4460894	1	Connector - 6 Position	
24	4460465	2	Socket, Female	
24	4460466	1	Plug, Terminal	
24	4460944	3	Socket, Female	
27	4460313	3	Terminal, Eyelet	
28	4460019	2	Terminal, Eyelet	
32	4460315	1	Terminal, Fork	
43	4461052	1	Connector - 25 Position	
43	4461005	5	Terminal	
43	4461006	5	Seal	
43	4461060	2	Terminal (Tin)	
43	4461054	2	Seal, Terminal	
43	4461008	18	Plug, Hole	
43	4461053	1	Cover, Plug	
50	4240032	AR	Tie-Strap (Not Shown)	
51	4240033	AR	Tie-Strap (Not Shown)	
52	4461097	1	Terminal, Eyelet	
54	4461095	1	Connector - 3 Position	
54	4460944	3	Socket, Female	
55	4461070	1	Connector with Resistor (3 Position)	
58	4460930	1	Connector - 8 Position	
58	4460465	2	Socket, Female	
58	4460466	6	Seal, Plug	
59	2902443	1	Kit, Receptacle	
59	4461071	8	Terminal, Female (Gold)	
59	4461072	1	Connector, Flange Mount	
59	4461073	1	Connector, Dust Cap	
59	4461074	1	Connector, Shell	

FIGURE 8-54. ENGINE HARNESS - DEUTZ TD2.9L4 ENGINES AND DEUTZ TCD2.9L4 ENGINES

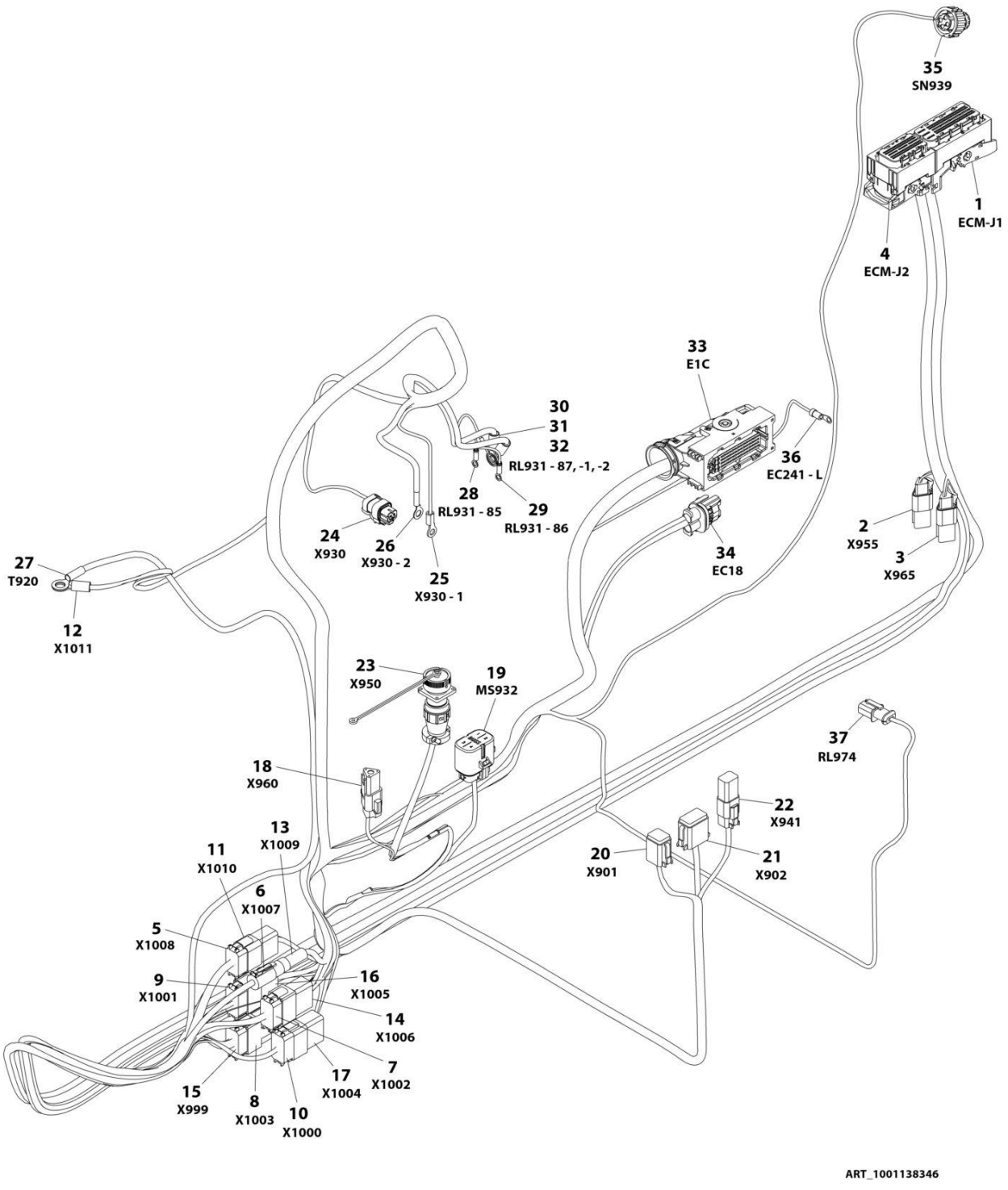

FIGURE 8-54. ENGINE HARNESS - DEUTZ TD2.9L4 ENGINES AND DEUTZ TCD2.9L4 ENGINES

ITEM	PART NUMBER	QTY	DESCRIPTION	REV
	1001138346	Ref	ENGINE HARNESS - DEUTZ TCD2.9L4 ENGINES AND DEUTZ TCD2.9L4 (STAGE V PRE-BUY) ENGINES	H
1	1001133956	1	Connector (Includes Cover, Locks and Retention Plate)	
1	1001182361	6	Terminal	
1	1001230934	15	Terminal	
1	1001126351	1	Terminal	
1	1001256507	4	Terminal	
1	1001230936	3	Plug, Terminal	
1	1001230935	62	Plug, Terminal	
1	1001126352	6	Terminal	
1	1001126384	19	Terminal	
1	1001126357	3	Plug, Seal	
1	1001126356	65	Plug, Seal	
2	4461070	1	Connector with Resistor (3 Position)	
2	4461095	1	Connector - 3 Position	
2	4460944	2	Socket, Female	
2	4460466	1	Seal, Plug	
3	4461070	1	Connector with Resistor (3 Position)	
3	4461095	1	Connector - 3 Position	
3	4460944	2	Socket, Female	
3	4460466	1	Seal, Plug	
4	1001133957	1	Connector (Includes Cover, Locks and Retention Plate)	
4	1001126351	13	Terminal	
4	1001230934	11	Terminal	
4	1001252527	4	Terminal	
4	1001256507	2	Terminal	
4	1001230935	19	Plug, Terminal	
4	1001230936	11	Plug, Terminal	
5	4460930	1	Connector - 8 Position	
5	4460944	5	Socket, Female (Gold)	
5	4460465	2	Socket, Female	
5	4460466	1	Seal, Plug	
6	1001116707	1	Connector - 1 Position	
6	91143340	1	Terminal	
7	4460935	1	Plug, Brown - 12 Position	
7	4460465	12	Socket, Female	
8	4460970	1	Connector - 12 Position	
8	4460941	12	Pin, Male	
9	4460934	1	Connector, Green - 12 Position	
9	4460465	10	Socket, Female	
9	4460466	2	Seal, Plug	
10	4460836	1	Connector, Black - 12 Position	
10	4460465	8	Socket, Female	
10	4460466	4	Seal, Plug	
11	4460931	1	Connector - 8 Position (Gray)	
11	4460943	5	Pin, Male (Gold)	
11	4460466	3	Plug, Socket	
12	8220164	1	Terminal, Eyelet	
13	1001116967	1	Connector - 1 Position	
13	91143339	1	Terminal	

ITEM	PART NUMBER	QTY	DESCRIPTION	REV
14	4460982	1	Connector - 12 Position	
14	4460464	12	Pin, Male	
15	4460933	1	Connector, Gray - 12 Position	
15	4460942	12	Socket, Female	
16	1001152742	1	Connector - 12 Position	
16	4460464	10	Pin, Male	
16	4460466	2	Seal, Plug	
17	4460950	1	Connector - 12 Position	
17	4460464	8	Pin, Male	
17	4460466	4	Plug, Seal	
18	4461070	1	Connector with Resistor (3 Position)	
18	4461095	1	Connector - 3 Position	
18	4460944	2	Socket, Female	
18	4460466	1	Seal, Plug	
19	80484084	1	Connector - 8 Position	
19	8229242	1	Fuse - 5A	
19	80983191	1	Fuse - 10A	
19	1001147264	1	Cap	
19	1001116728	4	Plug	
19	4460458	4	Seal	
20	4460894	1	Connector - 6 Position	
20	4460465	3	Socket, Female	
20	4460944	2	Socket, Female	
20	4460466	1	Seal, Plug	
21	4460930	1	Connector - 8 Position	
21	4460465	1	Socket, Female	
21	4460466	7	Plug, Seal	
22	1001220379	1	Connector - 4 Position	
22	4460465	2	Socket, Female	
22	4460942	2	Socket, Female	
22	4460932	1	Connector - 4 Position	
22	4460466	4	Seal, Plug	
23	2902443	1	Kit, Receptacle	
23	4461071	8	Terminal, Female (Gold)	
23	4461072	1	Connector, Flange Mount	
23	4461073	1	Connector, Dust Cap	
23	4461074	1	Connector, Shell	
24	1001116952	1	Connector - 2 Position	
24	4460465	2	Socket, Female	
25	4460043	1	Terminal, Eyelet	
26	1001117106	1	Terminal, Eyelet	
27	4460019	1	Terminal, Eyelet	
28	4460247	1	Terminal, Eyelet	
29	4460247	1	Terminal, Eyelet	
30	1001117107	1	Terminal, Eyelet	
31	1001117107	1	Terminal, Eyelet	
32	4460703	1	Terminal, Eyelet	
33	1001126362	1	Connector - 62 Position	
33	1001126363	23	Terminal	
33	1001256506	2	Seal	
33	1001126364	21	Seal	

ITEM	PART NUMBER	QTY	DESCRIPTION	REV
33	1001126392	10	Terminal	
33	1001223459	10	Seal	
33	1001126365	2	Terminal	
33	4461054	2	Seal	
33	1001126391	22	Plug, Terminal	
33	4461008	4	Plug, Cavity	
34	1001142938	1	Connector - 2 Position	
34	1001142940	2	Terminal, Female	
34	1001142941	2	Seal	
35	1001133714	1	Connector - 4 Position	
35	1001133715	3	Terminal, Female	
35	1001135650	1	Seal	
35	1001135651	1	Plug, Cavity	
36	4460042	1	Terminal, Eyelet	
37	1001138110	1	Connector - 2 Position	
37	1001138111	2	Socket, Female	
37	1001138113	2	Seal	

FIGURE 8-55. ENGINE HARNESS - DEUTZ TCD2.9L4 (STAGE V) & DEUTZ TCD2.9L4 (CHINA IV) ENGINES

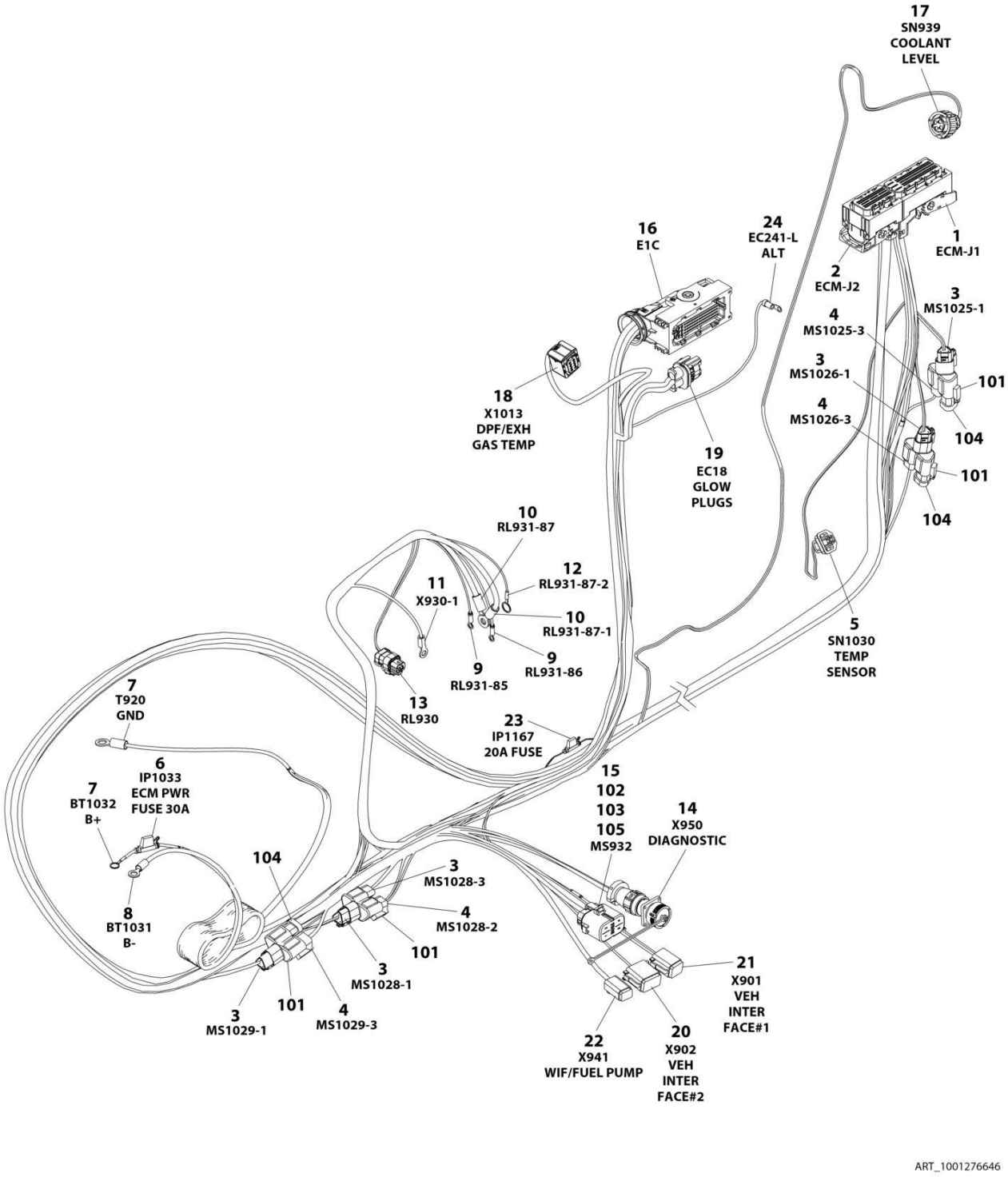

FIGURE 8-55. ENGINE HARNESS - DEUTZ TCD2.9L4 (STAGE V) & DEUTZ TCD2.9L4 (CHINA IV) ENGINES

ITEM	PART NUMBER	QTY	DESCRIPTION	REV
	1001276646	Ref	DEUTZ TCD2.9L4 STAGE V ENGINE HARNESS	B
1	1001133956	1	Connector (Includes Cover, Locks and Retention Plate)	
1	1001182361	6	Socket 18 - 15AWG Wire	
1	1001182365	6	Seal	
1	1001230934	23	Socket 0.75 MM2 Wire	
1	1001126351	3	Socket 2.5 - 1.5 MM2 Wire	
1	1001252527	4	Socket 0.85 MM2 Wire	
1	1001230935	57	Plug - Black	
1	1001230936	1	Plug - Natural	
2	1001133957	1	Connector (Includes Cover, Locks and Retention Plate)	
2	1001126351	13	Socket 2.5 - 1.5 MM2 Wire	
2	1001230934	26	Socket 0.75 MM2 Wire	
2	1001230935	10	Plug - Black	
2	1001230936	11	Plug - Natural	
3	1001116812	5	Connector	
3	4460944	10	Socket	
3	4460466	5	Plug	
4	4460539	4	Connector	
4	4460944	8	Socket	
4	4460466	4	Plug	
5	1001126487	1	Connector	
5	1001167635	2	Socket	
5	1001126485	2	Seal	
6	1001172064	1	Fuseholder	
6	1001172065	1	Fuse, 30Amp	
7	4460019	2	Terminal, Eyelet	
8	8220115	1	Terminal, Eyelet	
9	4460247	2	Terminal, Eyelet	
10	1001117107	2	Terminal, Eyelet	
11	4460043	1	Terminal, Eyelet	
12	4460703	1	Terminal, Eyelet	
13	1001116952	1	Connector	
13	4460465	2	Socket	
14	2902443	1	Kit, Receptacle	
14	4461071	8	Socket	
14	4461072	1	Connector	
14	4461073	1	Dust Cap	
14	4461074	1	Shell	
15	80484084	1	Connector	
15	4460748	4	Plug	
15	4460746	3	Socket 1.0 - 0.5 MM2 Wire	
15	1001234800	1	Socket 2.0 - 1.0 MM2 Wire	
15	4460458	4	Seal	
16	1001126362	1	Connector	
16	1001126363	37	Socket 20 - 17AWG	
16	1001126364	37	Seal (Use With 1001126363)	
16	1001126391	7	Plug - White	
16	4461008	4	Plug - Clear	
16	1001126392	12	Socket 16AWG	

SECTION 8 - ELECTRICAL

ITEM	PART NUMBER	QTY	DESCRIPTION	REV
16	1001223459	12	Seal (Use With 1001223459)	
16	1001167632	2	Socket 1.0 - 0.5 MM2 Wire	
16	4461054	2	Seal (Use With 10011676323)	
16	1001151856	1	Backshell	
17	1001133714	1	Connector	
17	1001133715	3	Socket	
17	1001135650	3	Seal	
17	1001135651	1	Plug	
18	1001239202	1	Connector	
18	1001126363	7	Socket	
18	1001126364	7	Seal	
18	1001135651	1	Plug	
19	1001142938	1	Connector	
19	1001142940	2	Socket	
19	1001142941	2	Seal	
20	4460930	1	Connector	
20	4460465	1	Socket	
20	4460466	7	Plug	
21	4460894	1	Connector	
21	4460465	2	Socket - Nickel	
21	4460944	2	Socket - Gold	
21	4460466	2	Plug	
22	4460884	1	Connector	
22	4460465	2	Socket 20 - 16AWG	
22	4460942	2	Socket 16 - 14AWG	
23	1001170764	1	Fuseholder with Cover and 20AMP Fuse	
23	1001197719	1	Resistor 620ohm/5 watt	
24	4460042	1	Terminal, Eyelet	
101	4460945	4	Connector	
102	8229242	1	Fuse, 5Amp	
103	80983191	1	Fuse, 10Amp	
104	1001116815	3	Connector	
105	1001147264	1	Cap	

FIGURE 8-56. FUEL FILTER HARNESS - DEUTZ TCD2.9L4 ENGINES AND DEUTZ TCD2.9L4 (STAGE V) ENGINES

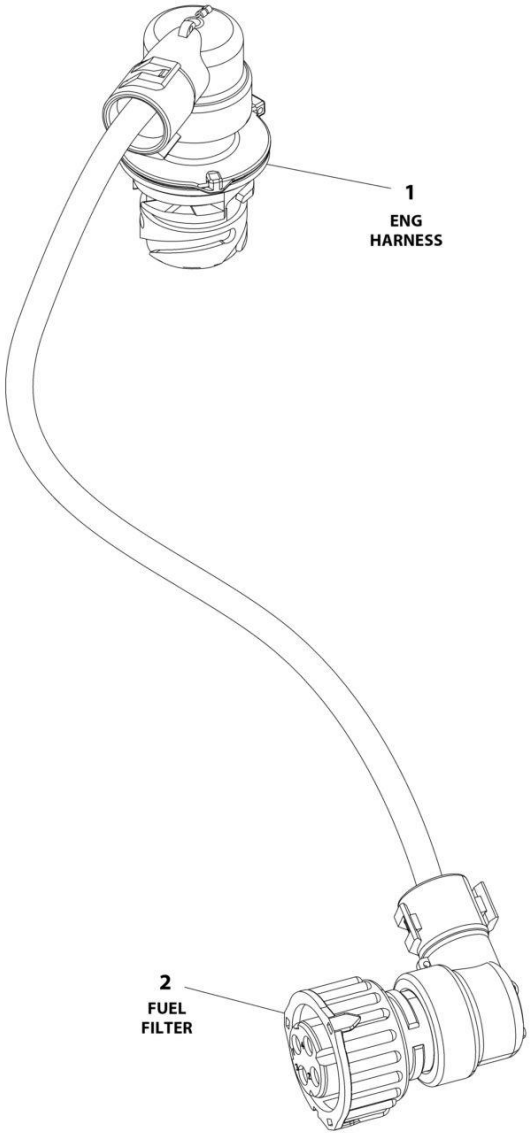

FIGURE 8-56. FUEL FILTER HARNESS - DEUTZ TCD2.9L4 ENGINES AND DEUTZ TCD2.9L4 (STAGE V) ENGINES

ITEM	PART NUMBER	QTY	DESCRIPTION	REV
	1001148843	Ref	FUEL FILTER HARNESS - DEUTZ TCD2.9L4 ENGINES	A
1	1001148842	1	Connector - 4 Position	
1	1001148841	4	Pin, Male	
1	1001135650	4	Seal	
2	1001133714	1	Plug, Male - 4 Position	
2	1001133715	4	Socket, Female	
2	1001135650	4	Seal	

FIGURE 8-57. FUEL HARNESS - DEUTZ TCD2.9L4 ENGINES AND DEUTZ TCD2.9L4 (STAGE V) ENGINES

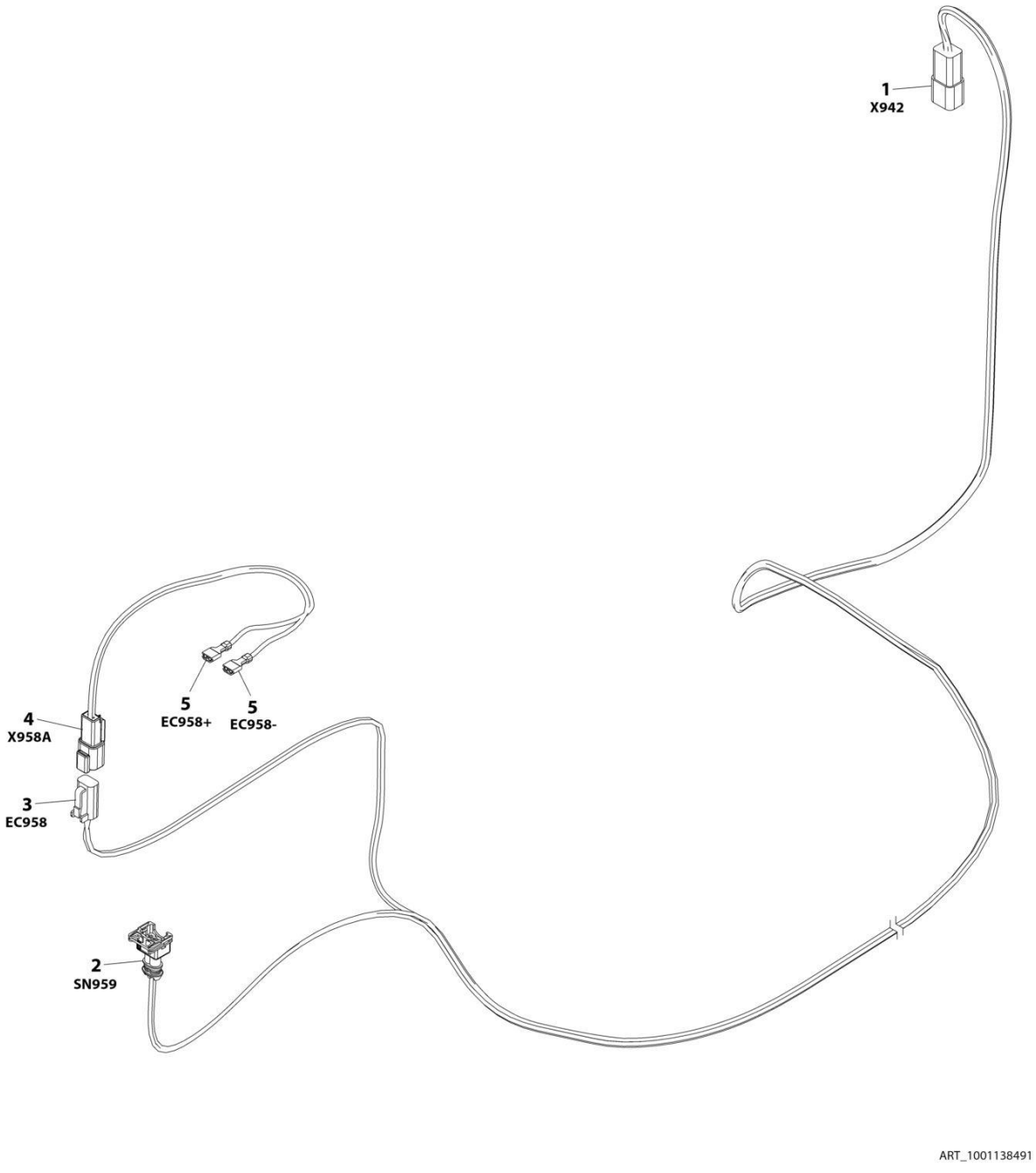

FIGURE 8-57. FUEL HARNESS - DEUTZ TCD2.9L4 ENGINES AND DEUTZ TCD2.9L4 (STAGE V) ENGINES

ITEM	PART NUMBER	QTY	DESCRIPTION	REV
	1001138491	Ref	FUEL PUMP HARNESS	D
1	4460932	1	Receptacle, Female - 4 Position	
1	4460941	2	Pin, Male	
1	4460464	2	Pin, Male	
2	1001116983	1	Plug, Male - 2 Position	
2	1001116710	2	Socket, Female	
2	4461054	2	Seal	
3	4460891	1	Plug, Male - 2 Position	
3	4460942	2	Socket, Female	
4	4460897	1	Connector - 2 Position	
4	4460941	2	Pin, Male	
5	8220051	2	Terminal, Ring	

FIGURE 8-58. GENERATOR HARNESS - 4000W GENERATOR

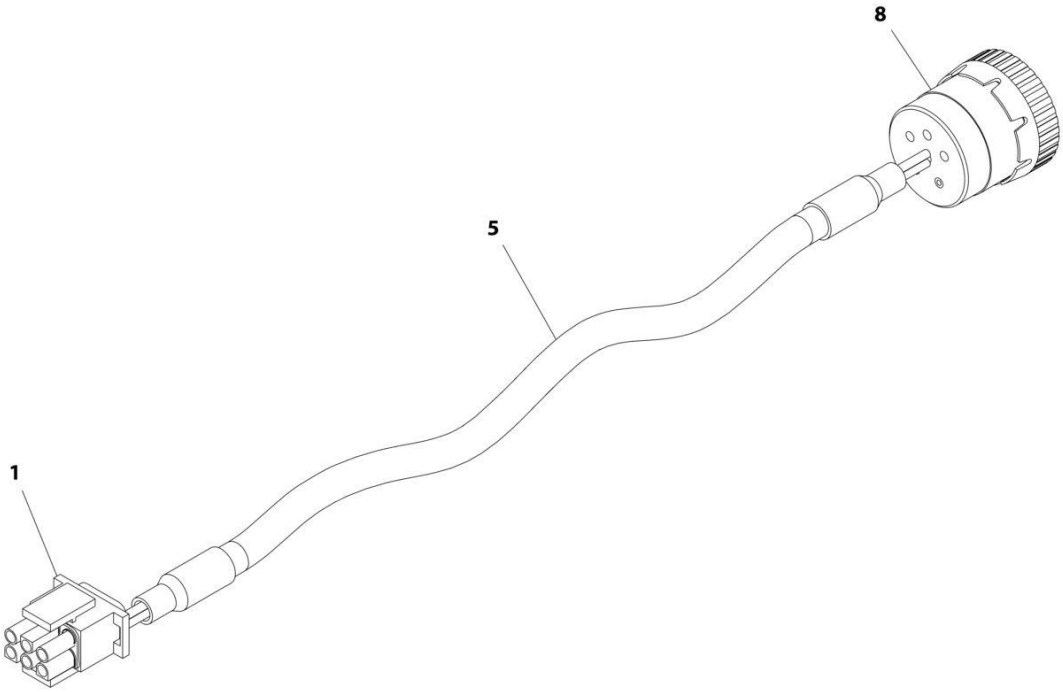

FIGURE 8-58. GENERATOR HARNESS - 4000W GENERATOR

ITEM	PART NUMBER	QTY	DESCRIPTION	REV
	1001152533	Ref	GENERATOR HARNESS - 4000W GENERATOR	A
1	4460225	1	Connector - 6 Position	
1	4460268	2	Socket, Female	
1	4460807	1	Seal, Plug	
1	4460808	1	Seal, Plug	
5	1060341	8 ft /2.4m	Cable, 16/2	
8	77363233	1	Connector - 6 Position	
8	4460465	2	Socket, Female	

FIGURE 8-59. GENERATOR HARNESS - 7500W GENERATOR

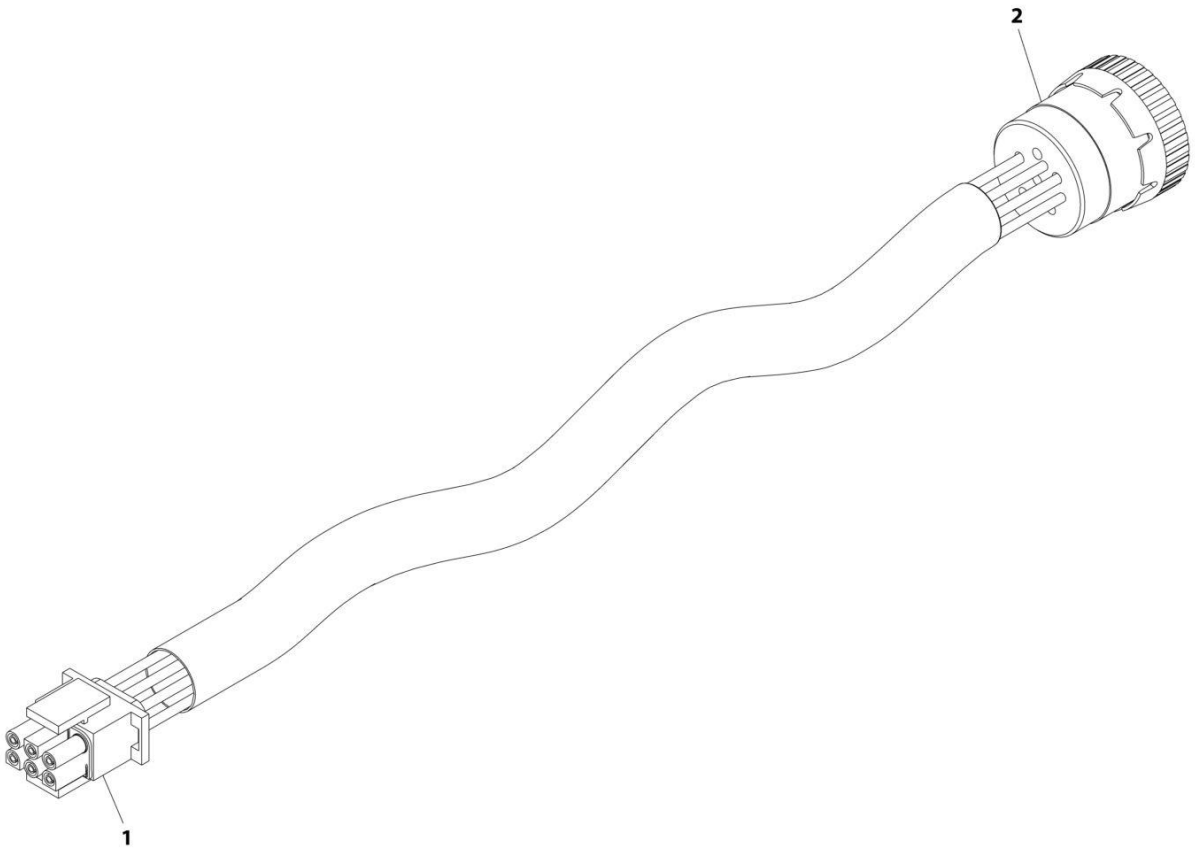

FIGURE 8-59. GENERATOR HARNESS - 7500W GENERATOR

ITEM	PART NUMBER	QTY	DESCRIPTION	REV
	4922972	Ref	GENERATOR HARNESS - 7500W GENERATOR	C
1	4460225	1	Connector - 6 Position	
1	4460268	6	Socket, Female	
1	4460807	1	Seal, Plug	
1	4460808	1	Seal, Plug	
2	77363233	1	Connector - 6 Position	
2	4460465	6	Socket, Female	

FIGURE 8-60. GROUND CONTROL BOX HARNESS

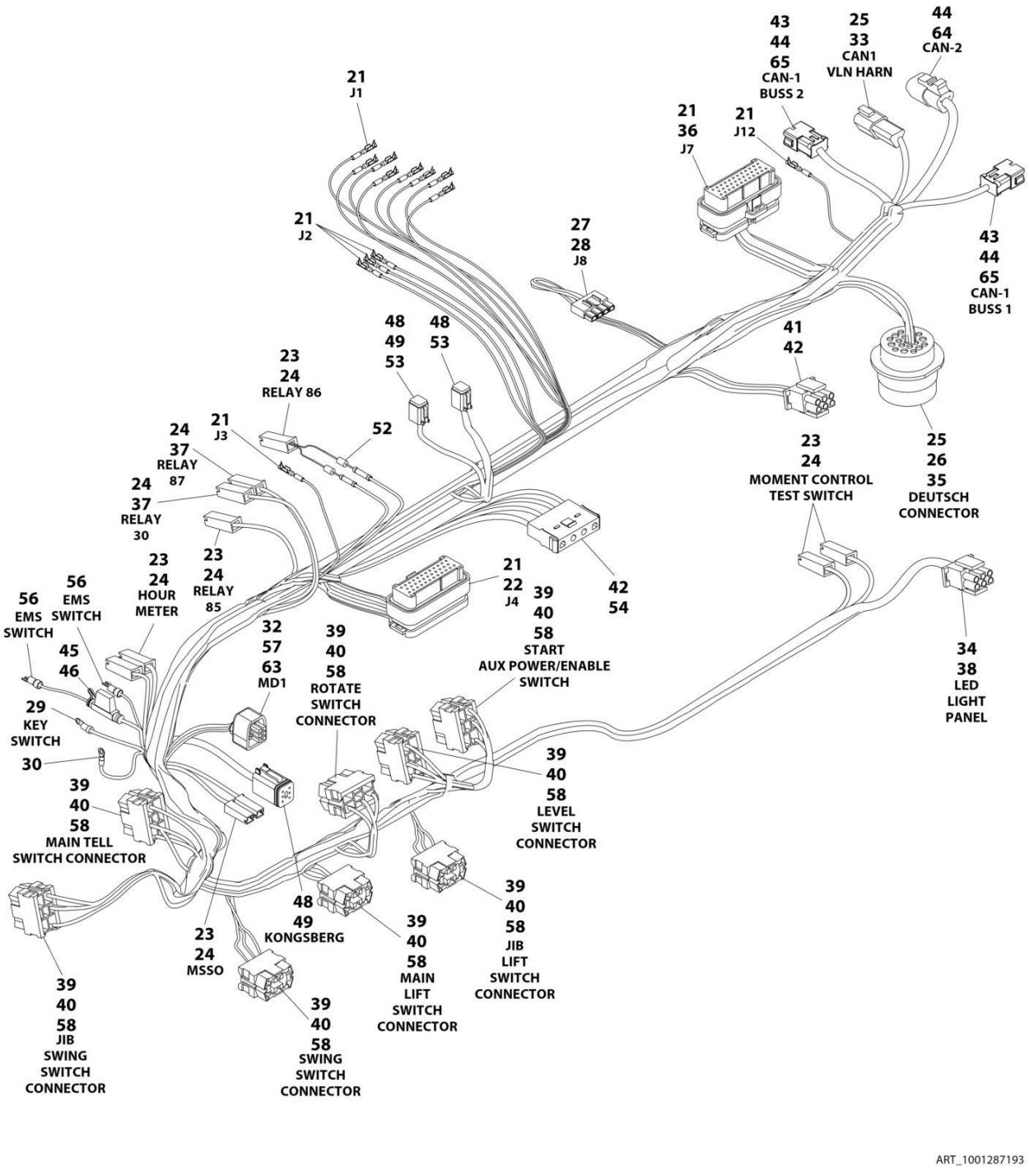

FIGURE 8-60. GROUND CONTROL BOX HARNESS

ITEM	PART NUMBER	QTY	DESCRIPTION	REV
	1001287193	Ref	GROUND CONTROL BOX HARNESS	B
21	4460871	49	Socket	
22	4460876	1	Connector	
23	4460259	10	Socket	
24	4460260	12	Housing	
25	4460464	13	Pin 20 - 16AWG	
26	4460866	1	Connector	
27	4460878	1	Connector	
28	4460887	3	Socket	
29	4460142	3	Terminal, Ring	
30	4460313	3	Terminal, Ring	
32	4460868	1	Connector	
33	4460536	1	Connector	
34	1001237667	1	Connector	
35	4460508	3	Pin 14 - 12AWG	
36	4460873	1	Connector	
37	4460297	2	Socket	
38	1001237668	5	Socket	
39	4460418	8	Connector	
40	4460419	8	Socket 18 - 14AWG	
41	4460225	1	Plug	
42	4460227	10	Pin	
43	1001119020	2	Connector	
44	4460944	22	Socket	
45	2400066	1	Fuseholder with Cover	
46	2400065	1	Fuse, 30Amp	
48	4460894	3	Connector	
49	4460465	5	Socket 20 - 16AWG	
52	3990010	2	Diode - 3Amp	
53	4460942	2	Socket 16 - 14AWG	
54	4460761	1	Connector	
56	4460806	6	Terminal, Fork	
57	4460877	4	Socket	
58	1001159186	4	Socket 20 - 18AWG	
63	1001094105	1	Boot	
64	1001116812	1	Plug, Male - 3 Position	
65	4460933	2	Connector	

FIGURE 8-61. GROUND CONTROLS TO ENGINE HARNESS

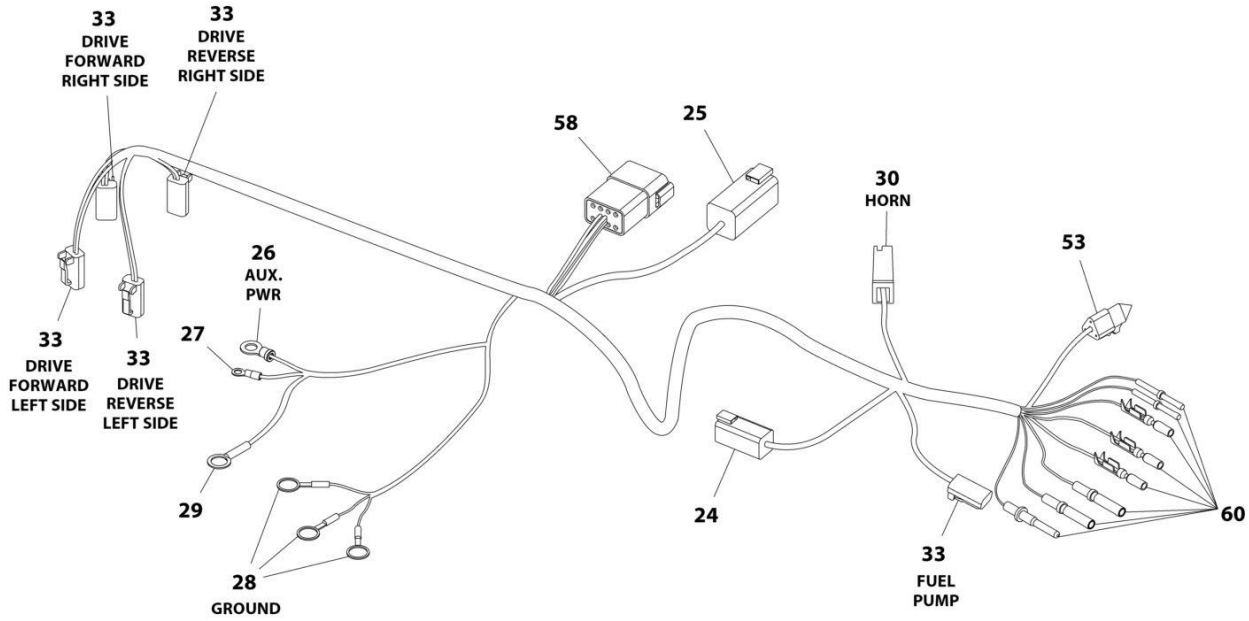

FIGURE 8-61. GROUND CONTROLS TO ENGINE HARNESS

ITEM	PART NUMBER	QTY	DESCRIPTION	REV
	1001119372	Ref	GROUND CONTROLS TO ENGINE HARNESS	C
24	4460899	1	Connector - 6 Position	
24	4460464	5	Pin, Male	
24	4460466	1	Plug, Terminal	
25	4460899	1	Connector - 6 Position	
25	4460464	4	Pin, Male	
25	4460943	2	Pin, Male (Gold)	
26	4460312	1	Terminal, Eyelet	
27	4460313	1	Terminal, Eyelet	
28	4460019	3	Terminal, Eyelet	
29	4460256	1	Terminal, Eyelet	
30	4460260	1	Terminal, Housing	
30	4460259	1	Terminal	
33	4460891	5	Connector - 2 Position	
33	4460465	10	Socket, Female	
53	4460539	1	Connector - 3 Position	
53	4460944	3	Socket, Female	
58	4460931	1	Connector - 8 Position	
58	4460464	8	Pin, Male	
60	4460465	2	Socket, Female	
60	4460887	1	Terminal (12 Gauge)	
60	4460871	11	Socket, Female	
60	4460508	1	Pin, Male	

FIGURE 8-62. JIB STOW SWITCH HARNESS

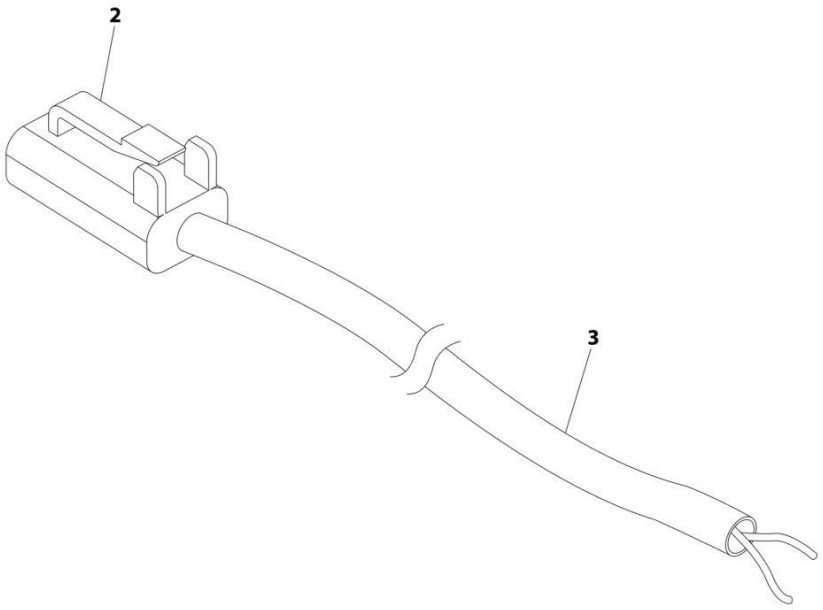

FIGURE 8-62. JIB STOW SWITCH HARNESS

ITEM	PART NUMBER	QTY	DESCRIPTION	REV
	4922784	Ref	JIB STOW SWITCH HARNESS	C
2	4460891	1	Connector - 2 Position	
2	4460465	2	Socket, Female	
3	1060902	15 ft/ 4.6m	Cable, Electrical 18/2	

FIGURE 8-63. LOAD SENSING PIN HARNESS

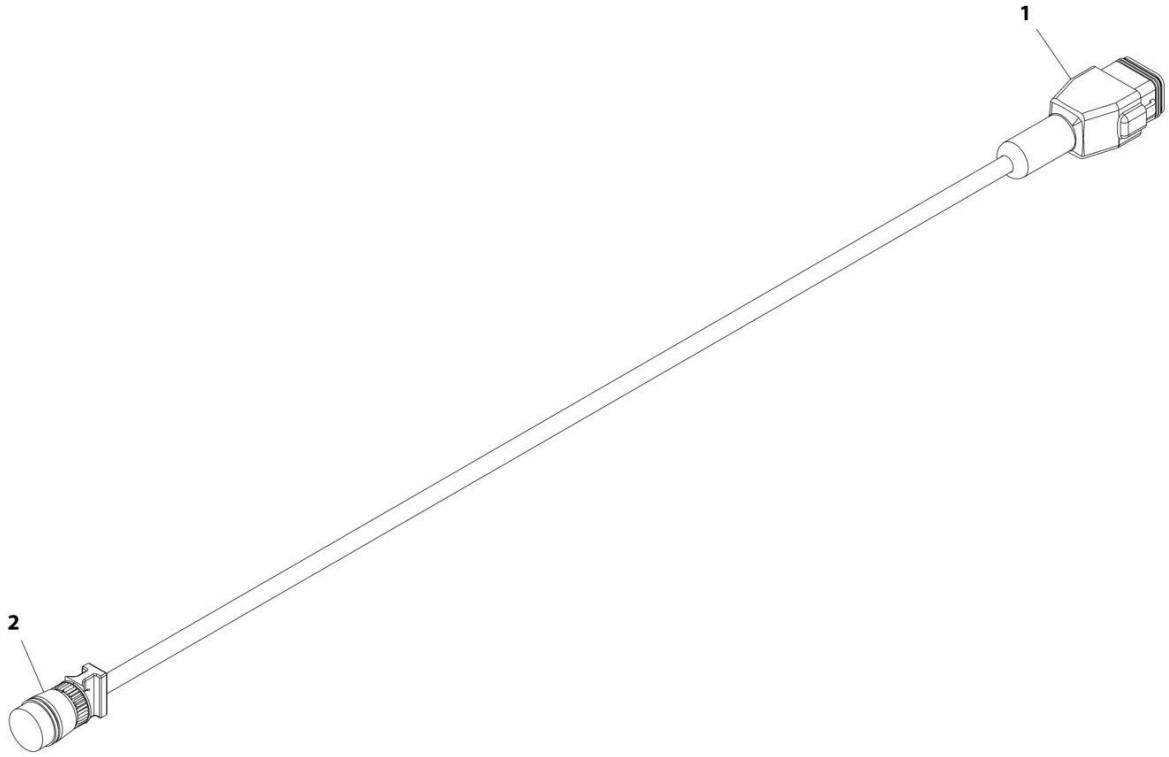

FIGURE 8-63. LOAD SENSING PIN HARNESS

ITEM	PART NUMBER	QTY	DESCRIPTION	REV
	4923256	Ref	LOAD SENSING PIN HARNESS	C
1	4460930	1	Connector - 8 Position (Gray)	
1	4460465	4	Socket, Female	
1	4460466	3	Plug, Sealing	
2	See Note	NSS	Connector - 4 Position (Note: Not Available for Purchase)	
2	See Note	NSS	Terminal (Note: Not Available for Purchase)	

FIGURE 8-64. LOCKOUT VALVE HARNESS

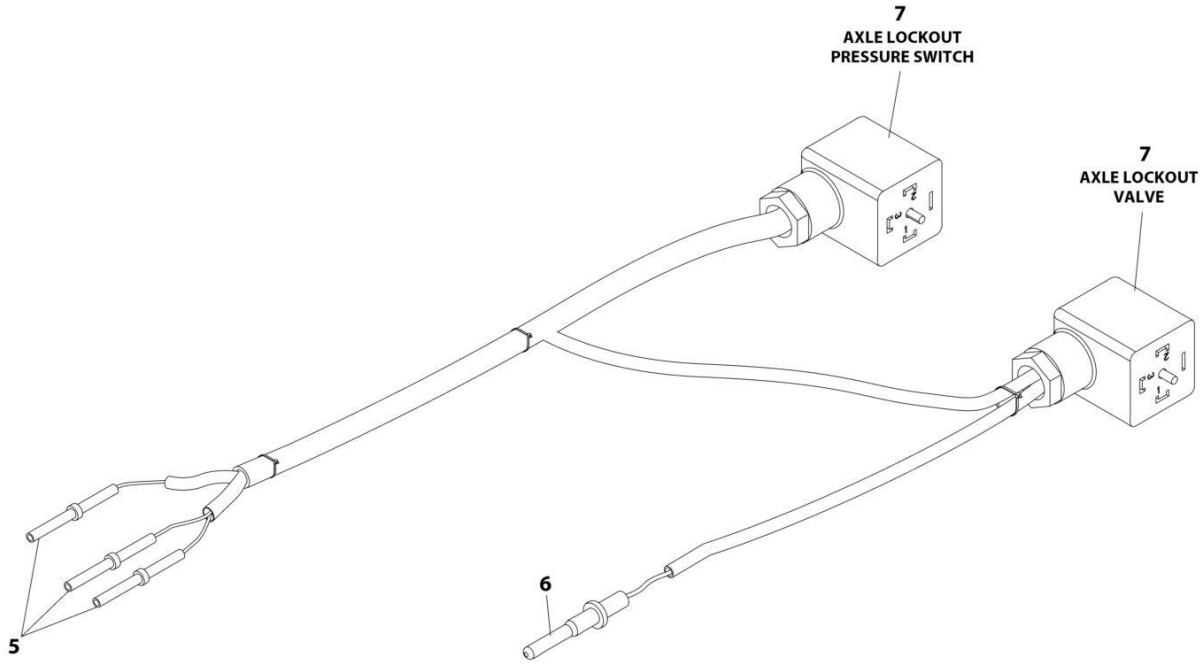

FIGURE 8-64. LOCKOUT VALVE HARNESS

ITEM	PART NUMBER	QTY	DESCRIPTION	REV
	4922767	Ref	LOCKOUT VALVE HARNESS	D
5	4460465	3	Socket, Female	
6	4460464	1	Pin, Male	
7	1001263923	2	Connector, Din	
8	4240033	6	Tie-Strap (Not Shown)	

FIGURE 8-65. MAIN BOOM CONTROL CABLE HARNESS (1200SJP)

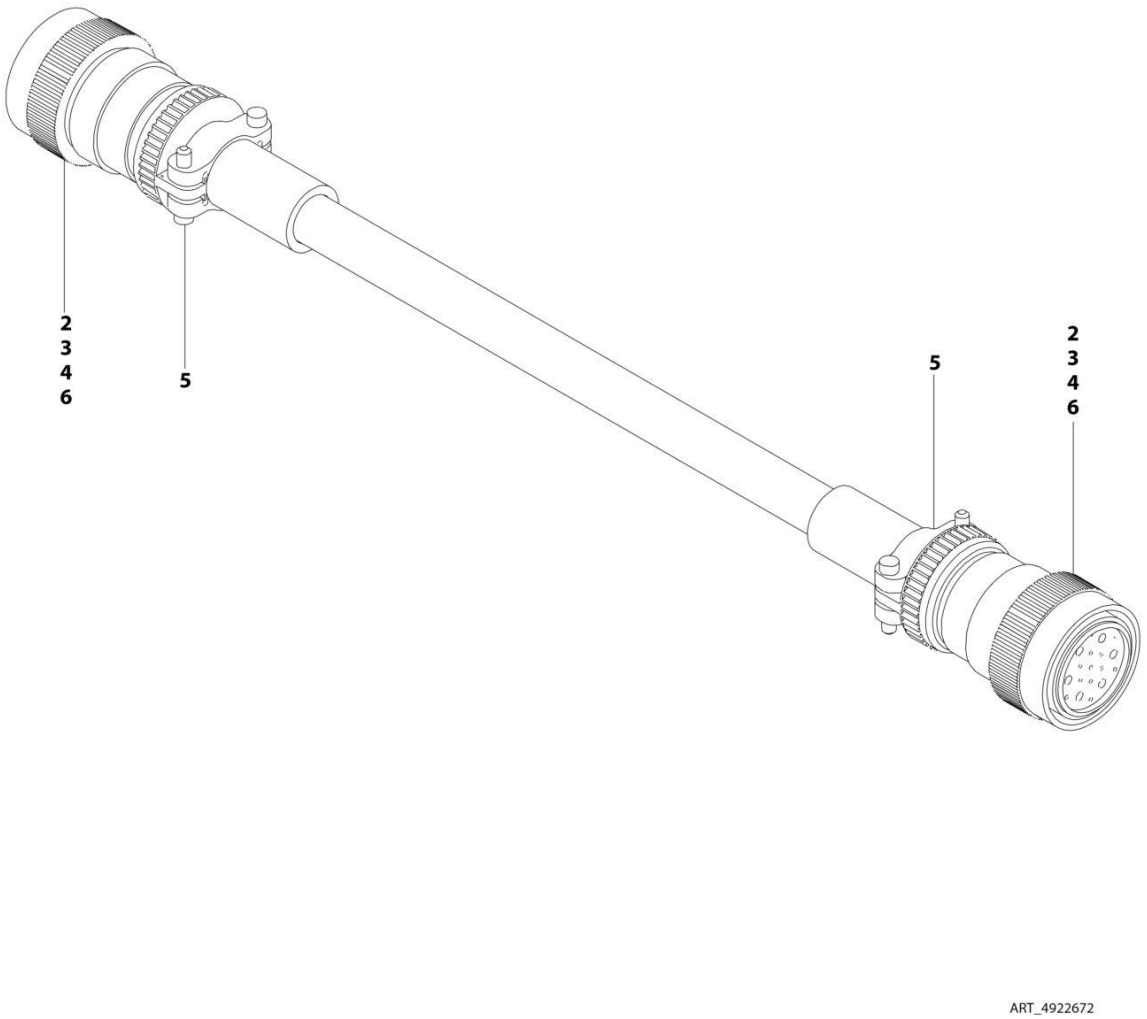

FIGURE 8-65. MAIN BOOM CONTROL CABLE HARNESS (1200SJP)

ITEM	PART NUMBER	QTY	DESCRIPTION	REV
	4922672	Ref	MAIN BOOM CONTROL CABLE HARNESS	C
2	4460465	22	Socket, Female	
3	4460865	2	Connector - 19 Position	
4	4460509	8	Socket, Female	
5	4460473	2	Clamp	
6	4460466	8	Plug, Socket	

FIGURE 8-66. MAIN BOOM CONTROL CABLE HARNESS (1350SJP)

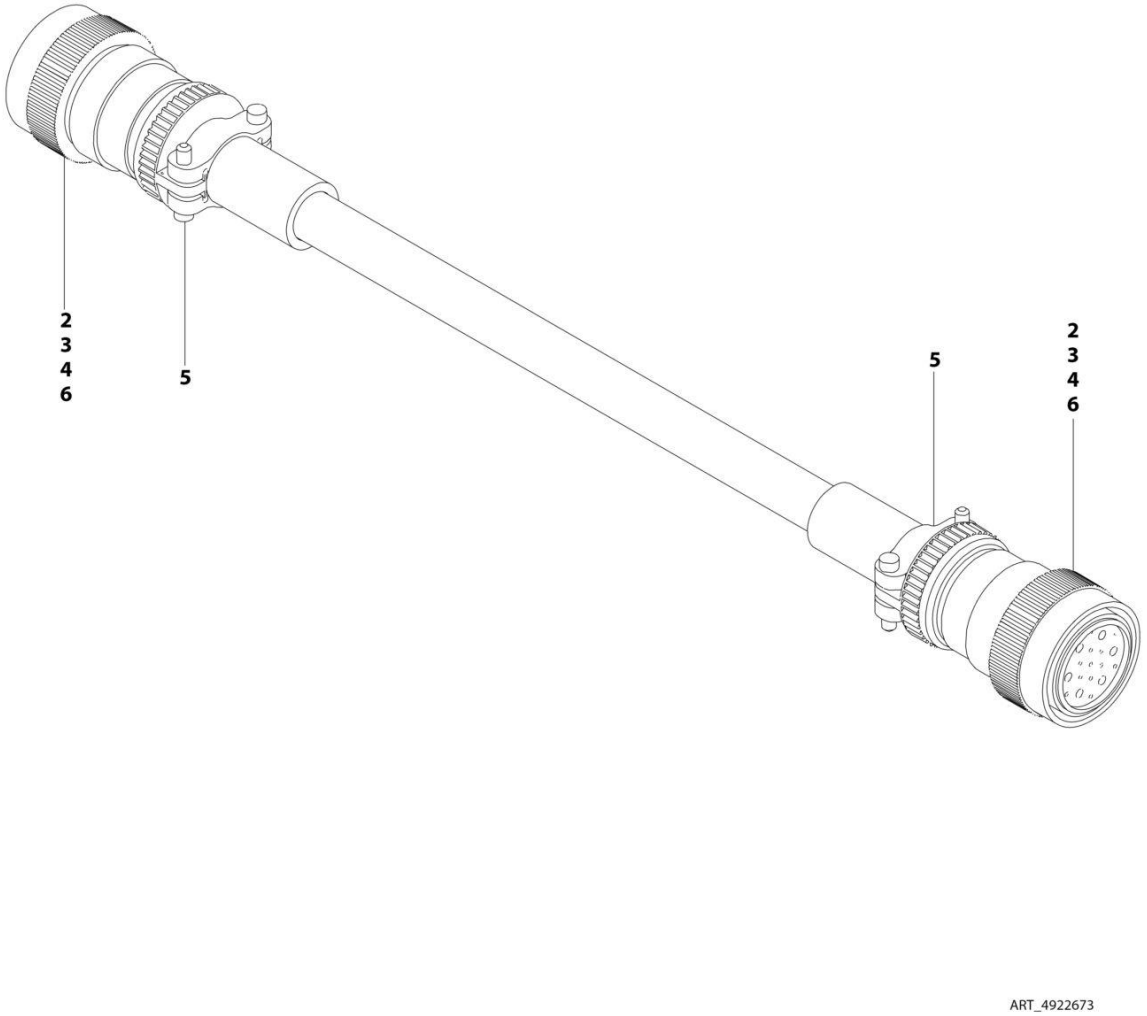

FIGURE 8-66. MAIN BOOM CONTROL CABLE HARNESS (1350SJP)

ITEM	PART NUMBER	QTY	DESCRIPTION	REV
	4922673	Ref	MAIN BOOM CONTROL CABLE HARNESS	D
2	4460465	22	Socket, Female	
3	4460865	2	Connector - 19 Position	
4	4460509	8	Socket, Female	
5	4460473	2	Clamp	
6	4460466	8	Plug, Socket	

FIGURE 8-67. MAIN VALVE HARNESS

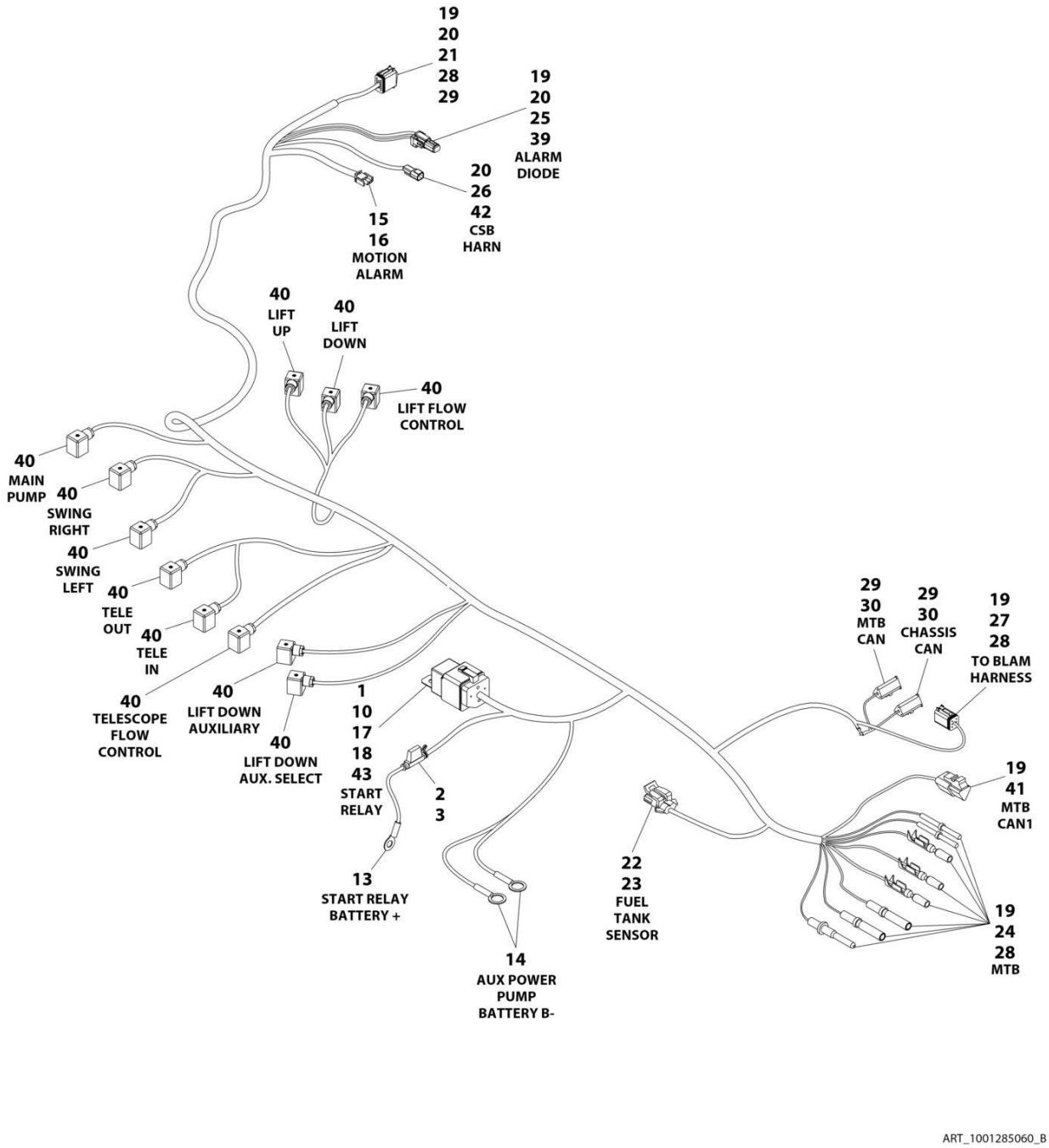

FIGURE 8-67. MAIN VALVE HARNESS

ITEM	PART NUMBER	QTY	DESCRIPTION	REV
	1001285060	Ref	MAIN VALVE HARNESS	B
1	0100048	AR	Grease, Dielectric	
2	2400065	1	Fuse, 30Amp	
3	2400066	1	Holder, Fuse	
10	3740080	1	Relay	
13	4460019	1	Terminal, Eyelet	
14	4460256	2	Terminal, Eyelet	
15	4460267	2	Pin	
16	4460320	1	Connector	
17	4460374	1	Plug	
18	1001116733	4	Socket	
19	4460465	14	Socket 20 - 16AWG (Nickel)	
20	4460466	6	Plug	
21	4460836	1	Connector	
22	4460842	2	Socket	
23	4460843	1	Connector	
24	4460871	16	Socket 20 - 16AWG (Gold)	
25	4460884	1	Connector	
26	4460897	1	Connector	
27	4460894	1	Connector	
28	4460942	8	Socket 16 - 14AWG (Nickel)	
29	4460944	9	Socket 20 - 16AWG (Gold)	
30	4460965	2	Connector	
39	1001152266	1	Connector, Diode Pack	
40	1001263923	11	Connector	
41	4460539	1	Connector	
42	4460464	1	Pin	
43	1001116734	1	Socket	

FIGURE 8-68. PLATFORM CONSOLE BOX HARNESS

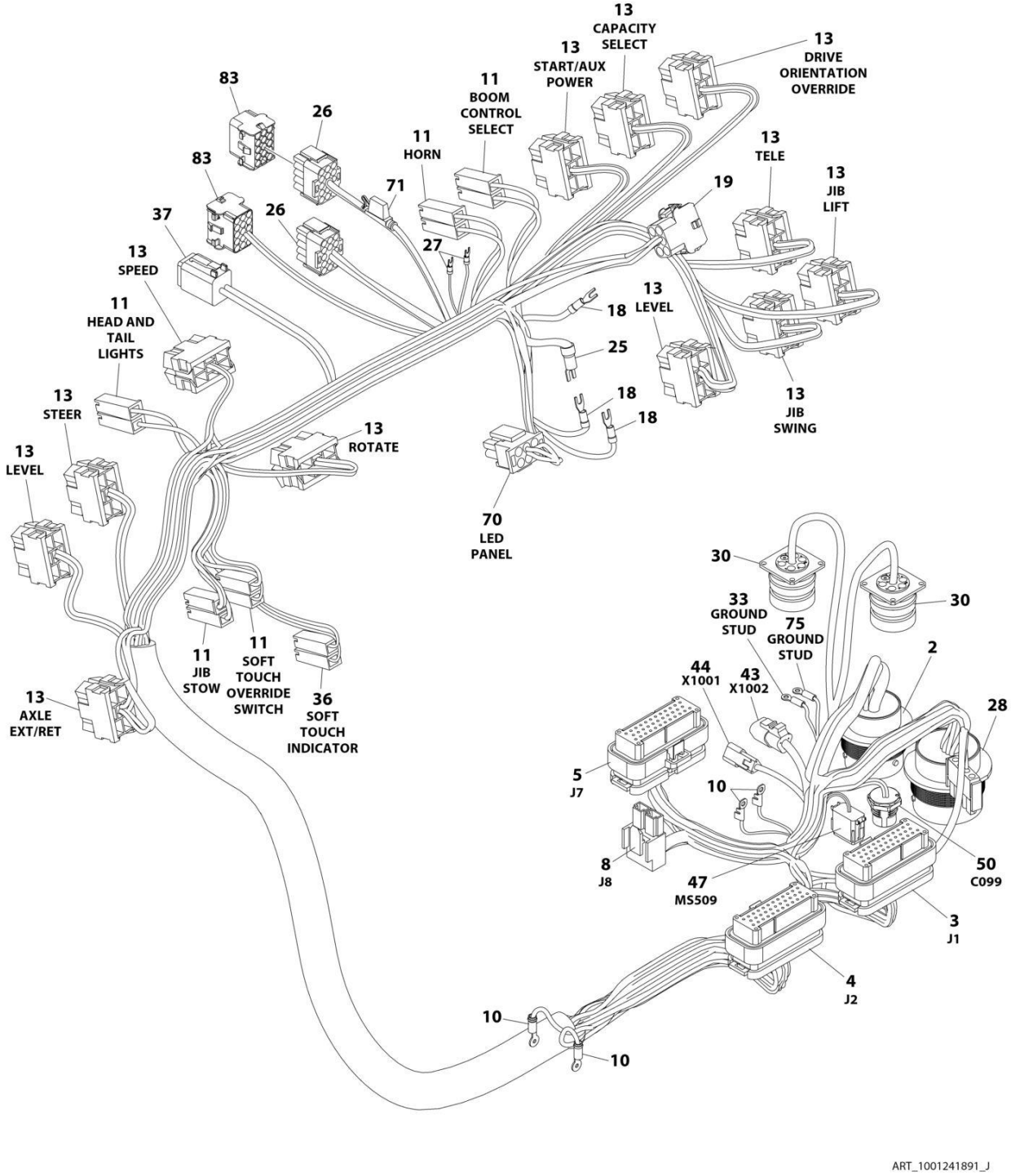

FIGURE 8-68. PLATFORM CONSOLE BOX HARNESS

ITEM	PART NUMBER	QTY	DESCRIPTION	REV
	1001241891	Ref	PLATFORM CONSOLE BOX HARNESS	J
2	4460866	1	Connector - 19 Pin	
2	4460464	7	Pin, Male Deutsch 16 Ga	
2	4460508	4	Pin, Male Deutsch 12 Ga	
2	4460943	3	Pin, Male 16 Ga (Gold)	
2	4460466	5	Plug	
3	4460874	1	Connector - 35 Position (Natural)	
3	4460871	33	Socket, Female	
3	4460905	2	Plug	
4	4460876	1	Connector - 35 Position (Blue)	
4	4460871	20	Socket, Female	
4	4460905	20	Plug	
5	4460873	1	Connector - 35 Position (Black)	
5	4460871	26	Socket, Female	
5	4460905	8	Plug	
8	4460879	1	Connector - 2 Position	
8	4460887	2	Terminal	
10	4460213	4	Terminal Eyelet	
11	4460260	10	Terminal, Housing	
11	4460259	10	Terminal	
13	4460418	12	Connector, Female - 6 Position	
13	4460419	12	Socket, Female	
13	1001159186	22	Terminal	
18	4460888	3	Terminal, Fork	
19	4460225	1	Connector - 6 Position	
19	4460227	5	Terminal (16 Gauge)	
25	4460806	1	Terminal, Fork	
26	4460434	2	Connector - 15 Position	
26	4460227	16	Pin, Male	
26	4460267	1	Pin, Male	
27	4460183	11	Terminal, Fork	
28	4460925	1	Connector - 21 Pin	
28	1001126011	13	Pin, Male Deutsch 16 Ga	
28	4460466	8	Plug	
30	1001121616	2	Connector - 6 Position	
30	1001121615	2	Base, Mounting	
33	4460142	1	Terminal, Eyelet	
36	4460016	2	Terminal (16 - 14AWG)	
36	1001271497	2	Terminal (22 - 18AWG)	
37	4460894	1	Connector - 6 Position	
37	4460465	5	Socket, Female	
37	4460466	1	Plug	
43	4460539	1	Plug, Male - 3 Position	
43	4460944	3	Socket, Female (Gold)	
44	4460536	1	Connector - 3 Position	
44	4460943	3	Pin, Male (Gold)	
47	4460933	1	Connector, Gray - 12 Position	
47	4460944	10	Socket, Female (Gold)	
47	4460466	2	Plug	
47	1001119020	1	Bussbar - 12 Position	

SECTION 8 - ELECTRICAL

ITEM	PART NUMBER	QTY	DESCRIPTION	REV
50	1001213447	1	Connector - 5 Position	
70	1001237667	1	Connector - 6 Position	
70	1001237668	4	Socket, Female (Gold)	
71	2400060	1	Holder, Fuse	
71	8229249	1	Fuse	
75	4460042	1	Terminal, Ring	
83	4460708	2	Plug, Male - 15 Position	
83	4460226	2	Socket, Female	

FIGURE 8-69. PLATFORM CONSOLE BOX HARNESS

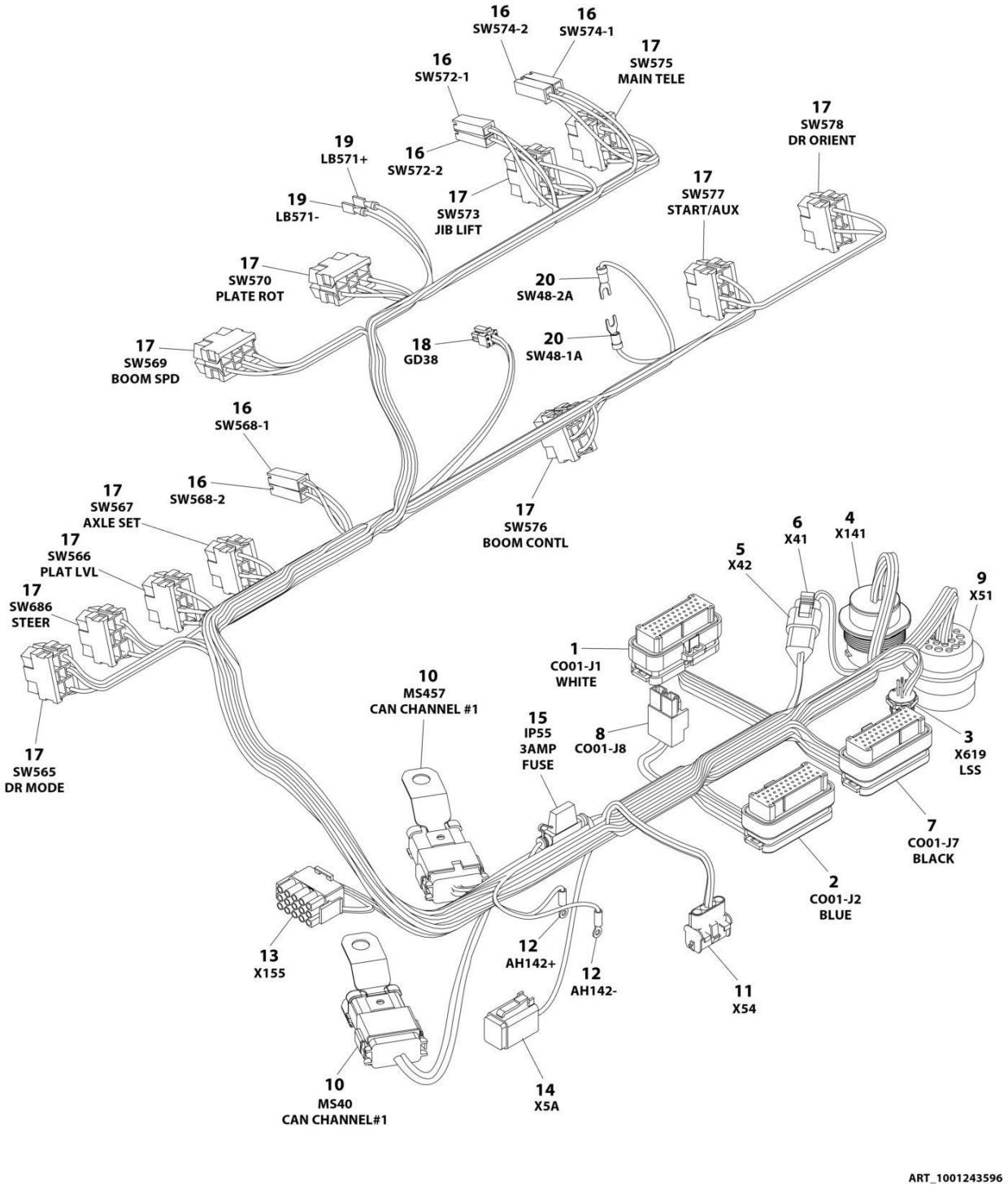

FIGURE 8-69. PLATFORM CONSOLE BOX HARNESS

ITEM	PART NUMBER	QTY	DESCRIPTION	REV
	1001243596	Ref	PLATFORM CONSOLE BOX HARNESS	C
1	4460874	1	Connector - 35 Position	
1	4460871	24	Socket, Female	
1	4460905	11	Plug, Terminal	
2	4460876	1	Connector - 35 Position	
2	4460871	11	Socket, Female	
2	4460905	24	Plug, Terminal	
3	1001213447	1	Receptacle, Female - 5 Position (With Wires & Terminals)	
4	4460925	1	Connector - 21 Position	
4	1001126011	7	Pin, Male	
4	4460518	14	Plug, Terminal	
5	4460536	1	Recepracle, Female - 3 Position	
5	4460943	3	Pin, Male	
6	4460539	1	Plug, Male - 3 Position	
6	4460944	3	Socket, Male	
7	4460873	1	Connector - 35 Position	
7	4460871	19	Socket, Female	
7	4460905	16	Plug, Terminal	
8	4460879	1	Plug, Male - 2 Position	
8	4460887	2	Terminal	
9	4460866	1	Connector - 19 Position	
9	4460943	3	Pin, Male	
9	4460464	5	Pin, Male	
9	4460508	2	Pin, Male	
9	4460466	9	Plug, Terminal	
10	4460933	2	Plug, Male - 12 Position	
10	4460465	17	Socket, Female	
10	4460466	7	Plug, Terminal	
10	1001119020	2	Bussbar - 12 Position	
10	1001120328	2	Mount	
11	4460761	1	Receptacle, Female - 4 Position	
11	4460227	4	Pin, Male	
12	1001098122	2	Terminal, Ring	
13	4460434	2	Plug, Male - 15 Position	
13	4460227	6	Pin, Male	
13	4460267	12	Pin, Male	
14	4460894	1	Plug, Male - 6 Position	
14	4460465	4	Socket, Female	
14	4460466	2	Plug, Terminal	
15	2400060	1	Fuseholder with Cover	
15		Ref	Fuse - 3 AMP	
16	4460260	6	Cover, Terminal	
16	4460259	6	Terminal	
17	4460418	11	Connector - 6 Position	
17	4460419	20	Socket, Female	
17	1001159186	21	Socket, Female	
18	1001237667	1	Plug, Male - 6 Position	
18	1001237668	4	Socket, Female	
19	4460016	2	Terminal	
20	4460183	2	Terminal, Fork	

FIGURE 8-70. PLATFORM INTERFACE HARNESS

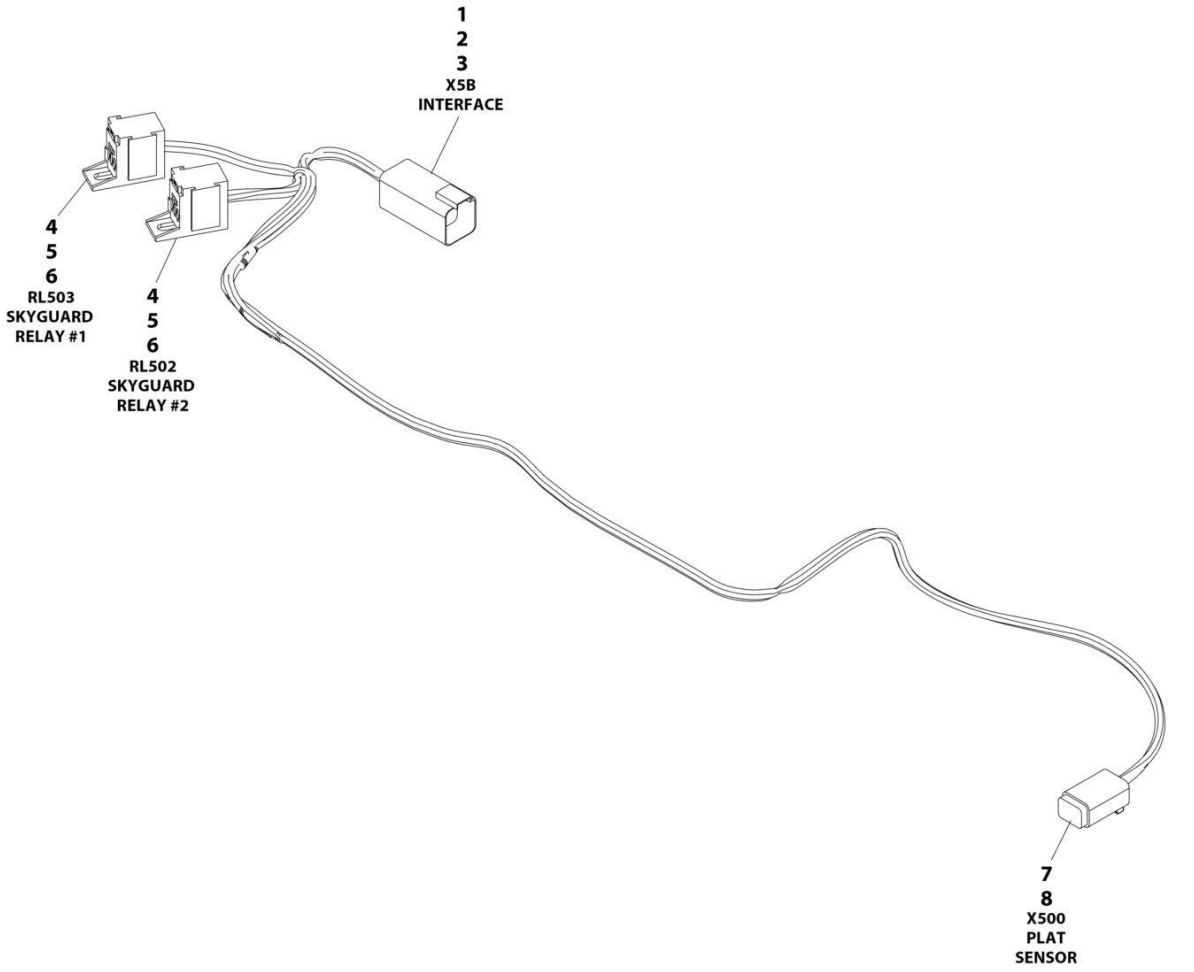

FIGURE 8-70. PLATFORM INTERFACE HARNESS

ITEM	PART NUMBER	QTY	DESCRIPTION	REV
	1001225580	Ref	INTERFACE HARNESS - WITH 1 CELL LSS	D
1	4460899	1	Connector	
2	4460464	4	Terminal	
3	4460466	2	Plug	
4	1001186432	2	Connector	
5	1001116720	4	Terminal	
6	1001118388	4	Terminal	
7	4460884	1	Connector	
8	4460465	4	Terminal	

FIGURE 8-71. PLATFORM VALVE HARNESS

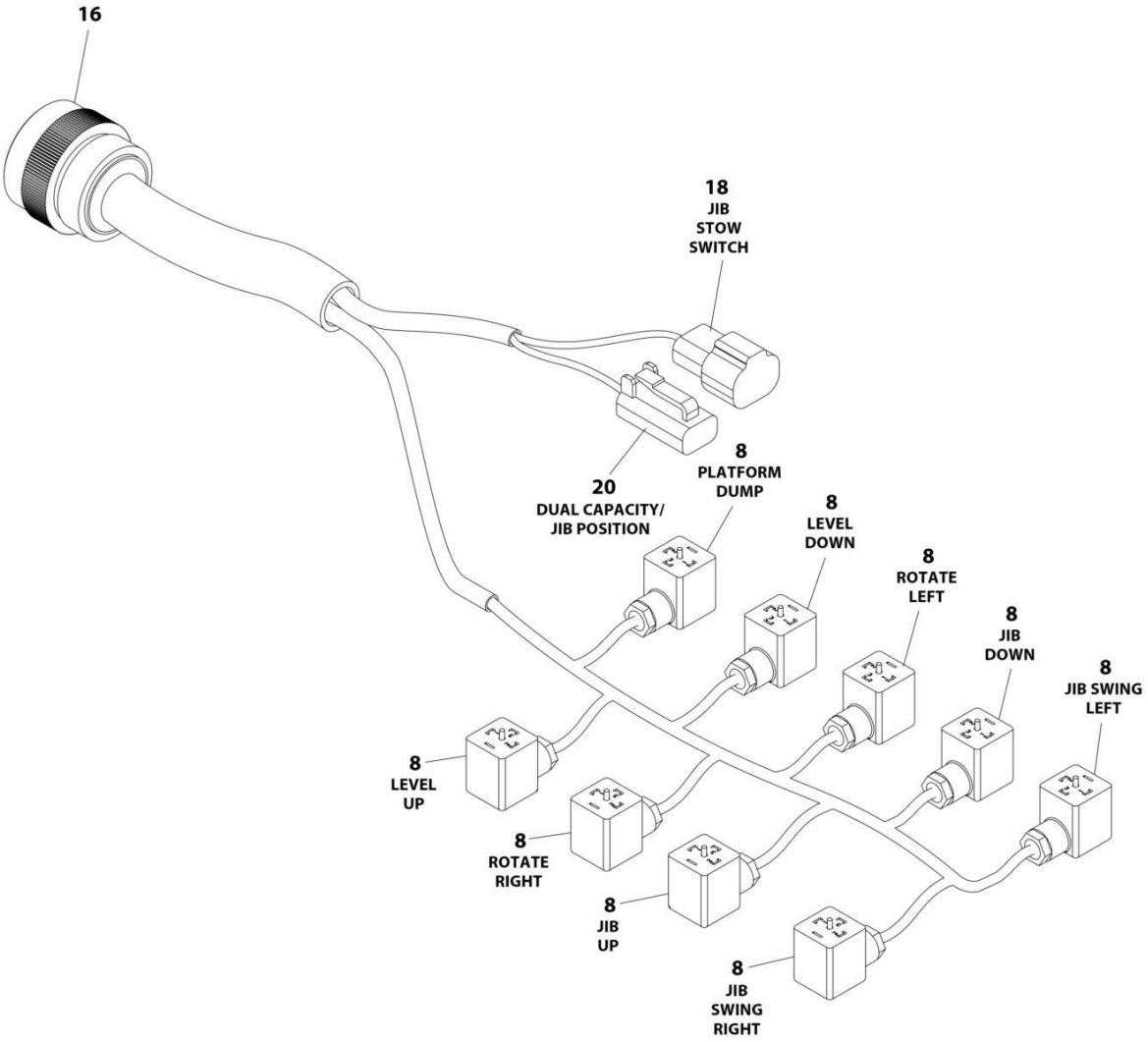

FIGURE 8-71. PLATFORM VALVE HARNESS

ITEM	PART NUMBER	QTY	DESCRIPTION	REV
	4922777	Ref	PLATFORM VALVE HARNESS	E
7	4240033	10	Tie-Strap (Not Shown)	
8	1001263923	9	DIN Connector	
16	4460926	1	Connector - 21 Position	
16	4460928	13	Socket, Female	
16	4460466	8	Plug, Hole	
18	4460897	1	Connector - 2 Position	
18	4460464	2	Pin, Male	
20	4460891	1	Plug, Male - 2 Position	
20	4460465	2	Socket, Female	

FIGURE 8-72. PUMP ADAPTER HARNESS - SAUER PUMPS

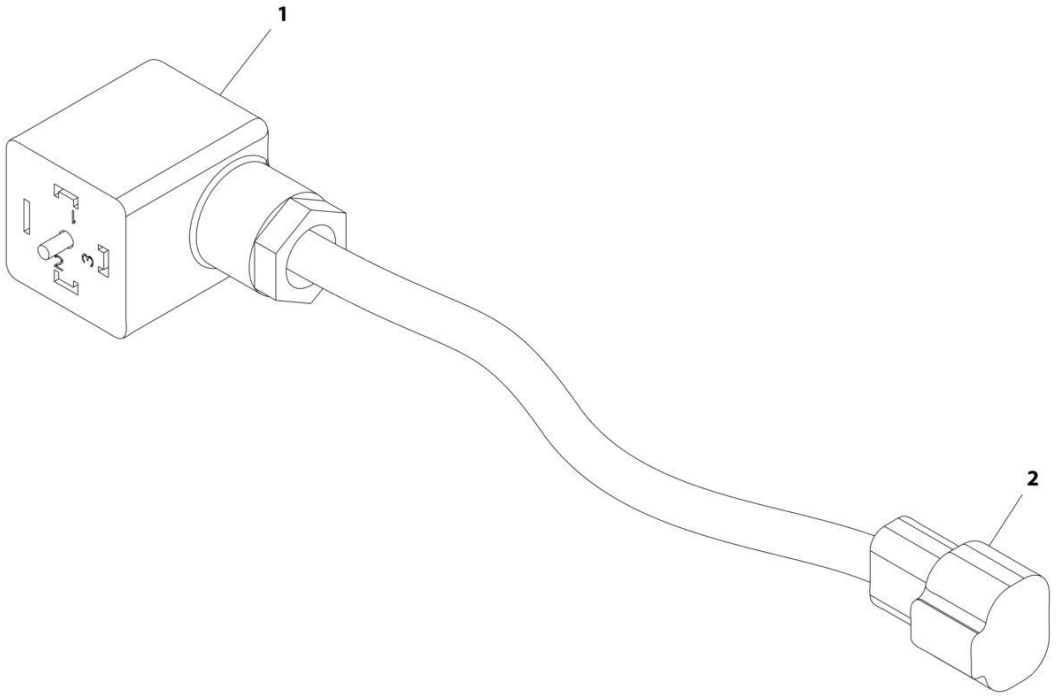

FIGURE 8-72. PUMP ADAPTER HARNESS - SAUER PUMPS

ITEM	PART NUMBER	QTY	DESCRIPTION	REV
	1001119456	Ref	PUMP ADAPTER HARNESS - SAUER PUMPS	C
1	4460880	2	DIN Connector	
2	4460897	2	Connector - 2 Position	
2	4460464	4	Pin, Male	

FIGURE 8-73. RECEPTACLE BOX KIT - 110V IEC YELLOW WITHOUT 2500W GENERATOR (CE & UK CA SPECS)

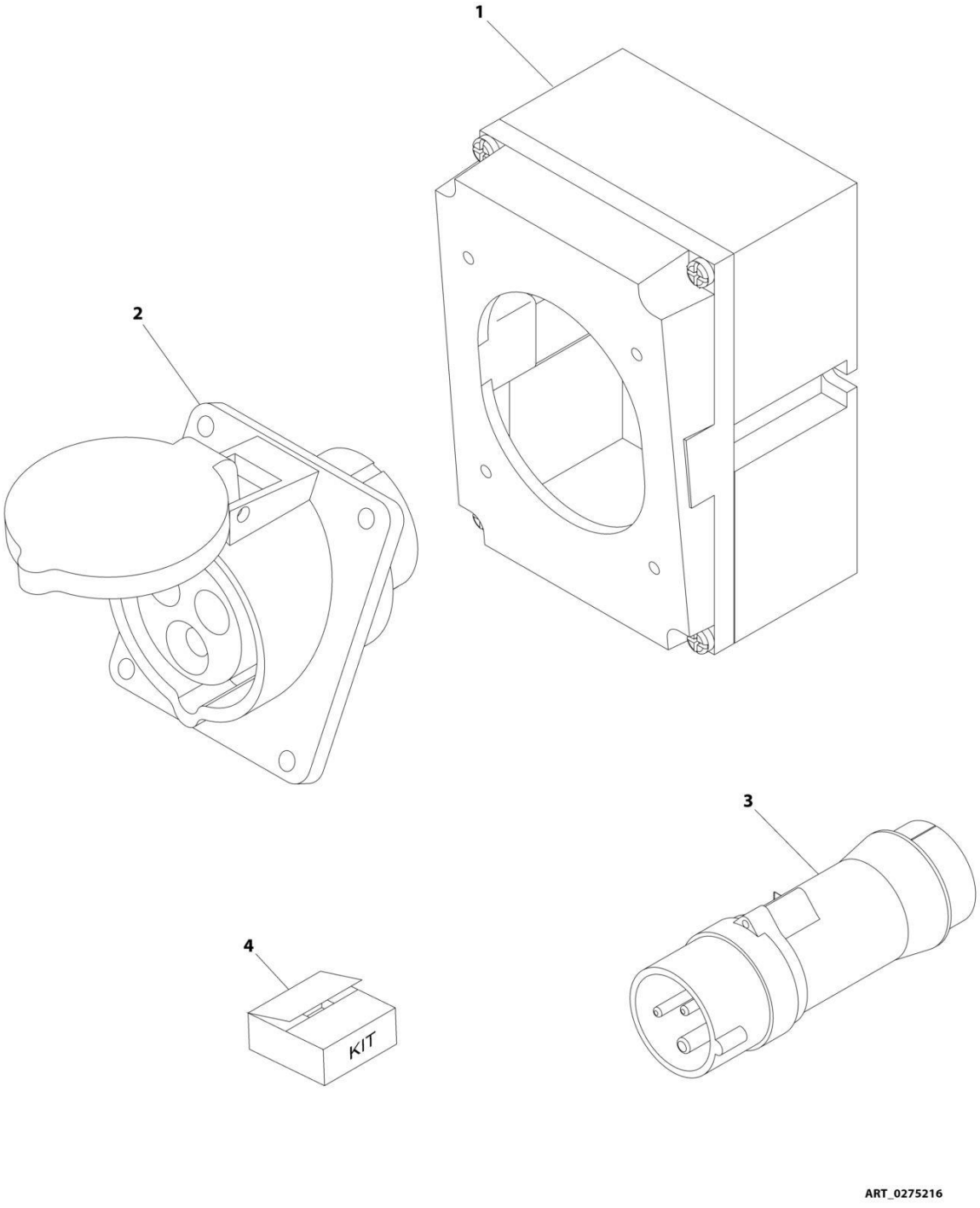

FIGURE 8-73. RECEPTACLE BOX KIT - 110V IEC YELLOW WITHOUT 2500W GENERATOR (CE & UK CA SPECS)

ITEM	PART NUMBER	QTY	DESCRIPTION	REV
	0275216	Ref	RECEPTACLE BOX KIT - 110V IEC YELLOW	B
1	0861781	1	Box, Switch	
2	4461198	1	Receptacle	
3	4461196	1	Plug, Male	
4	1001100341	1	Plug and Socket Kit (Includes Items 1-3 and Female Plug p/n 4461197)	

FIGURE 8-74. RECEPTACLE BOX KIT - 220V IEC BLUE WITHOUT 2500W GENERATOR (CE & UK CA SPECS)

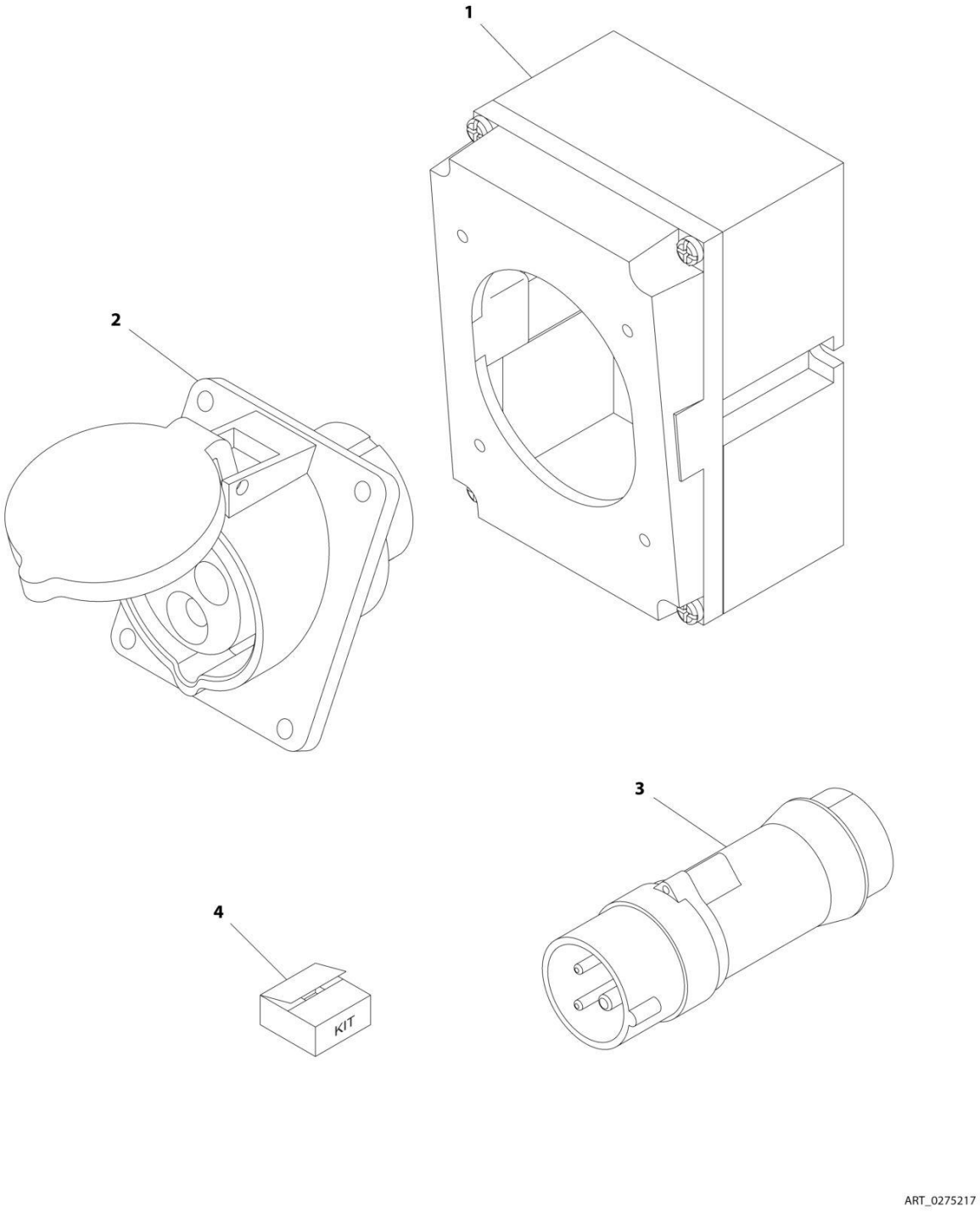

FIGURE 8-74. RECEPTACLE BOX KIT - 220V IEC BLUE WITHOUT 2500W GENERATOR (CE & UK CA SPECS)

ITEM	PART NUMBER	QTY	DESCRIPTION	REV
	0275217	Ref	RECEPTACLE BOX KIT - 220V IEC BLUE	B
1	0861781	1	Box, Switch	
2	4461201	1	Receptacle	
3	4461199	1	Plug, Male	
4	1001100342	1	Plug and Socket Kit (Includes Items 1-3 and Female Plug p/n 4461200)	

FIGURE 8-75. RECEPTACLE BOX KIT - 220V CEE7 POST GROUND WITHOUT 2500W GENERATOR (2X4 BOX) (CE & UK CA SPECS)

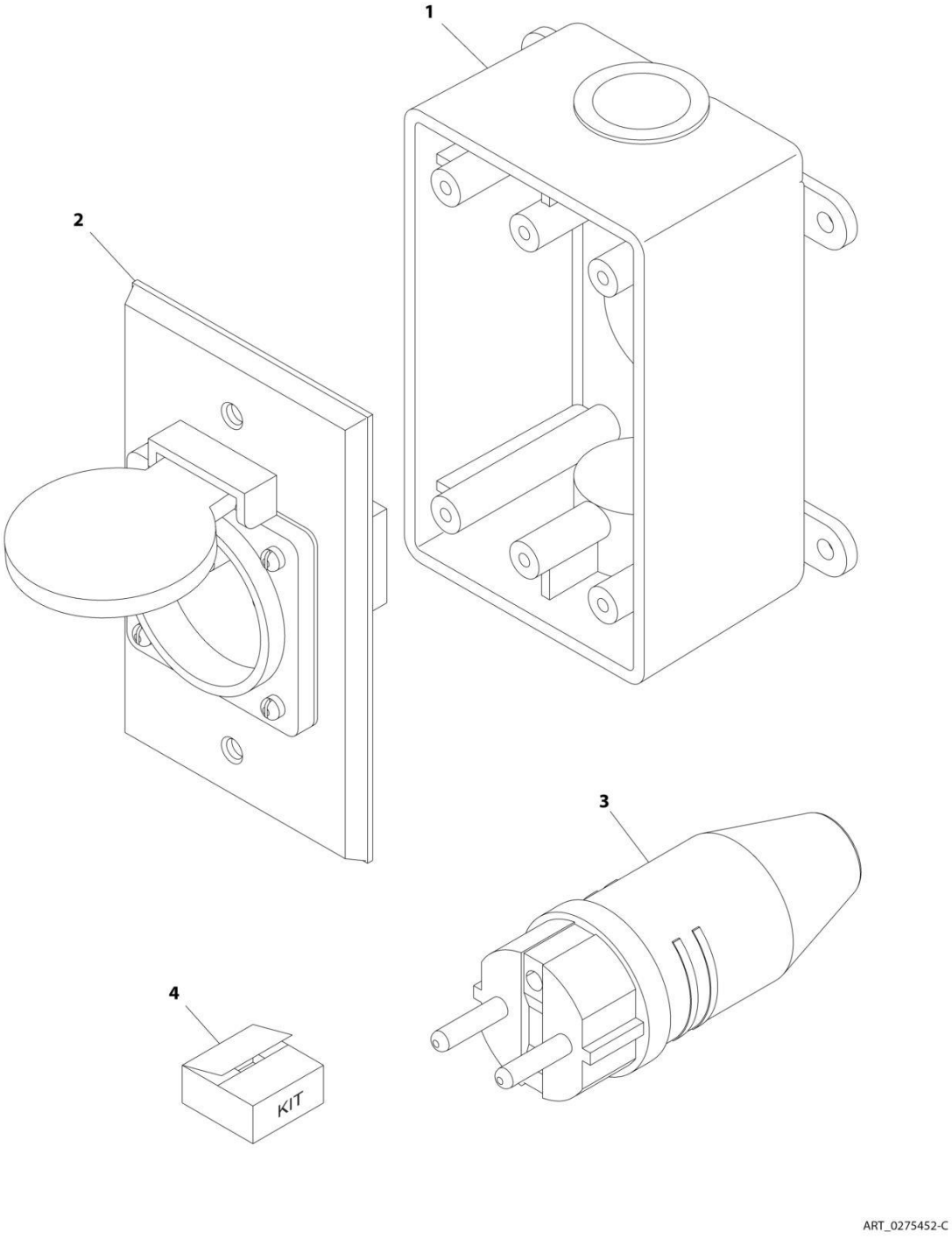

FIGURE 8-75. RECEPTACLE BOX KIT - 220V CEE7 POST GROUND WITHOUT 2500W GENERATOR (2X4 BOX) (CE & UK CA SPECS)

ITEM	PART NUMBER	QTY	DESCRIPTION	REV
	0275452	Ref	RECEPTACLE BOX KIT - 220V CEE7 POST GROUND 2IN X 4IN BOX	C
1	0861731	1	Box, Switch	
2	4461244	1	Receptacle	
3	4461205	1	Plug, Male	
4	1001100345	1	Plug and Socket Kit (Includes Items 1-3 and Female Plug p/n 4461203)	

FIGURE 8-76. RECEPTACLE BOX KIT - 220V CEE7 SIDE GROUND WITHOUT 2500W GENERATOR (2X4 BOX) (CE & UK CA SPECS)

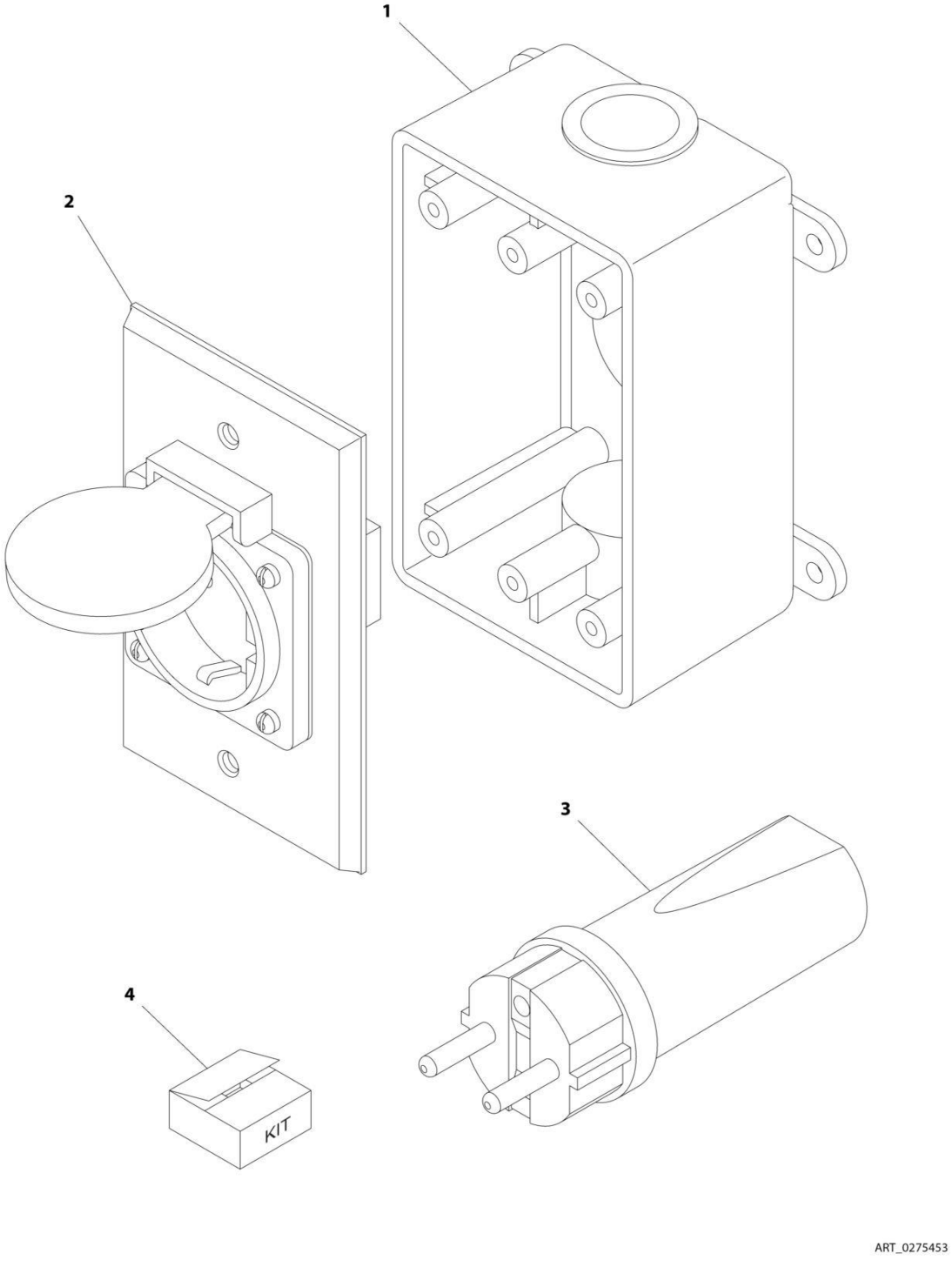

FIGURE 8-76. RECEPTACLE BOX KIT - 220V CEE7 SIDE GROUND WITHOUT 2500W GENERATOR (2X4 BOX) (CE & UK CA SPECS)

ITEM	PART NUMBER	QTY	DESCRIPTION	REV
	0275453	Ref	RECEPTACLE BOX KIT - 220V CEE7 SIDE GROUND	B
1	0861731	1	Box, Switch	
2	4461245	1	Receptacle	
3	4461205	1	Plug, Male	
4	1001100347	1	Plug and Socket Kit (Includes Items 1-3 and Female Plug p/n 4461206)	

FIGURE 8-77. RECEPTACLE BOX KIT - 220V AFSINT 107 KEYED GROUND WITHOUT 2500W GENERATOR (2X4 BOX) (CE & UK CA SPECS)

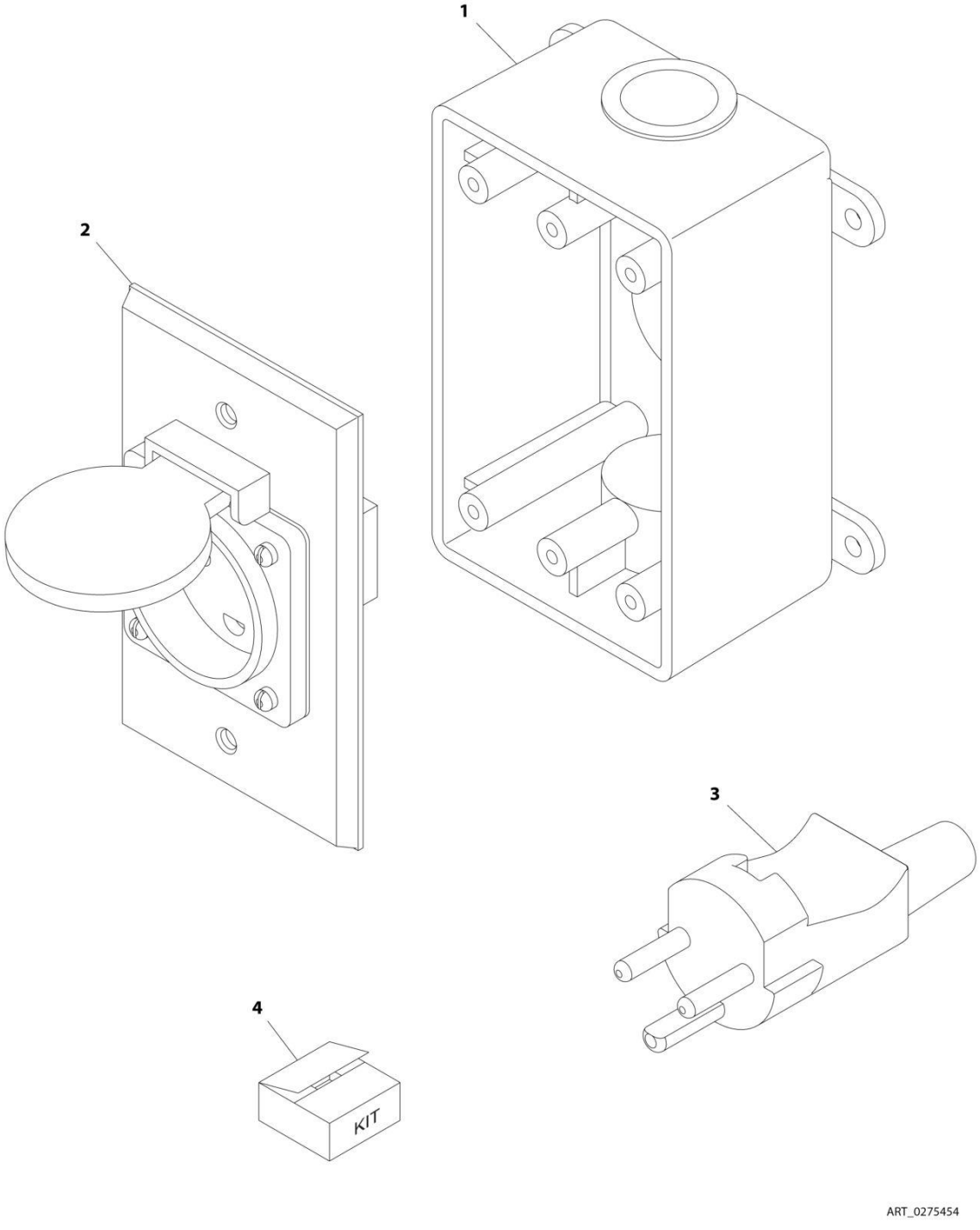

FIGURE 8-77. RECEPTACLE BOX KIT - 220V AFSINT 107 KEYED GROUND WITHOUT 2500W GENERATOR (2X4 BOX) (CE & UK CA SPECS)

ITEM	PART NUMBER	QTY	DESCRIPTION	REV
	0275454	Ref	RECEPTACLE BOX KIT - 220V AFSINT 107	B
1	0861731	1	Box, Switch	
2	4461246	1	Receptacle	
3	4461249	1	Plug, Male	
4	1001100346	1	Plug and Socket Kit (Includes Items 1-3 and Female Plug p/n 4461250)	

FIGURE 8-78. SKYEYE INTERMEDIATE HARNESS

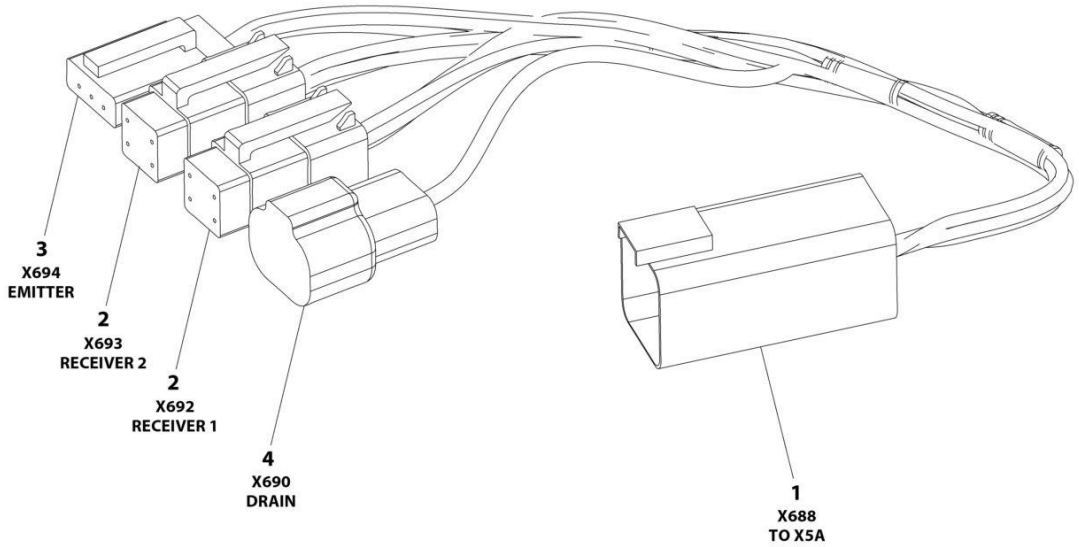

ART_1001237865

FIGURE 8-78. SKYEYE INTERMEDIATE HARNESS

ITEM	PART NUMBER	QTY	DESCRIPTION	REV
	1001237865	Ref	SKYEYE INTERMEDIATE HARNESS	A
1	4460899	1	Connector - 6 Position	
1	4460943	4	Pin, Male	
1	4460466	2	Plug, Terminal	
2	4461077	2	Connector - 4 Position	
2	1001119619	8	Socket, Female	
3	4460911	1	Connector - 3 Position	
3	1001119619	3	Socket, Female	
4	1001187681	1	Connector - 2 Position	
4	4460941	1	Pin, Male	
4	4460466	1	Plug, Terminal	

FIGURE 8-79. SKYEYE EMITTER HARNESS

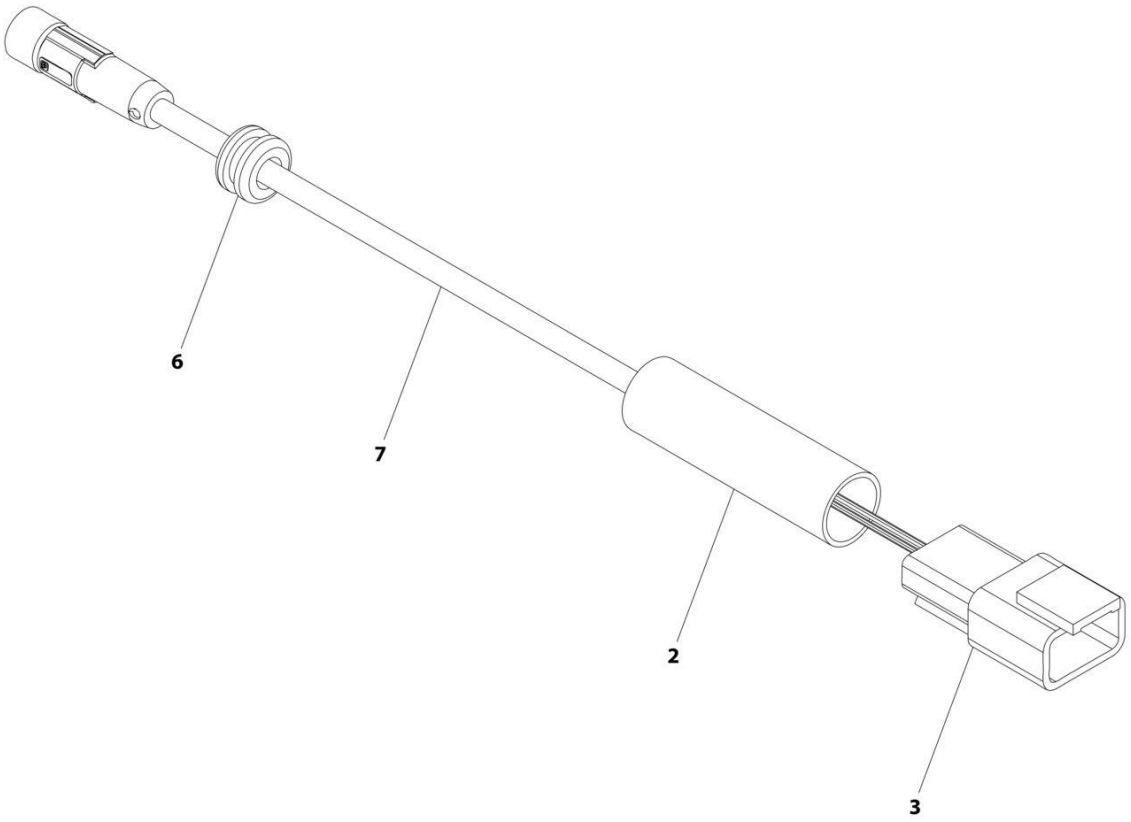

FIGURE 8-79. SKYEYE EMITTER HARNESS

ITEM	PART NUMBER	QTY	DESCRIPTION	REV
	1001237864	Ref	SKYEYE EMITTER HARNESS	A
2	2820247	AR	Tubing, Heat Shrink	
3	4460910	1	Connector - 3 Position	
3	1001119620	3	Pin, Male	
6	1001227996	1	Grommet	
7	1001237862	1	Cable, M8 Female Cordset	

FIGURE 8-80. SKYEYE RECEIVER HARNESS

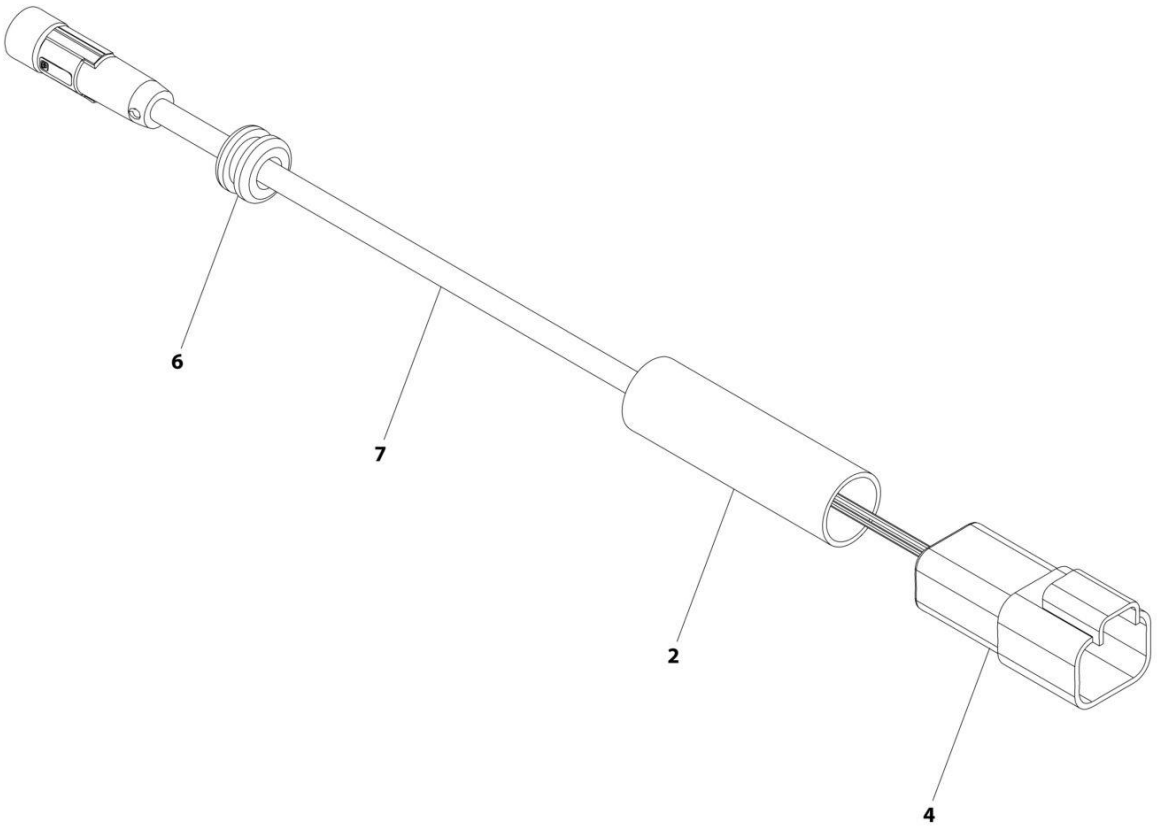

FIGURE 8-80. SKYEYE RECEIVER HARNESS

ITEM	PART NUMBER	QTY	DESCRIPTION	REV
	1001237863	Ref	SKYEYE RECEIVER HARNESS	A
2	2820247	AR	Tubing, Heat Shrink	
4	1001097051	1	Connector - 4 Position	
4	1001119620	4	Pin, Male	
6	1001227996	1	Grommet	
7	1001237862	1	Cable, M8 Female Cordset	

FIGURE 8-81. SKYLINE HARNESS

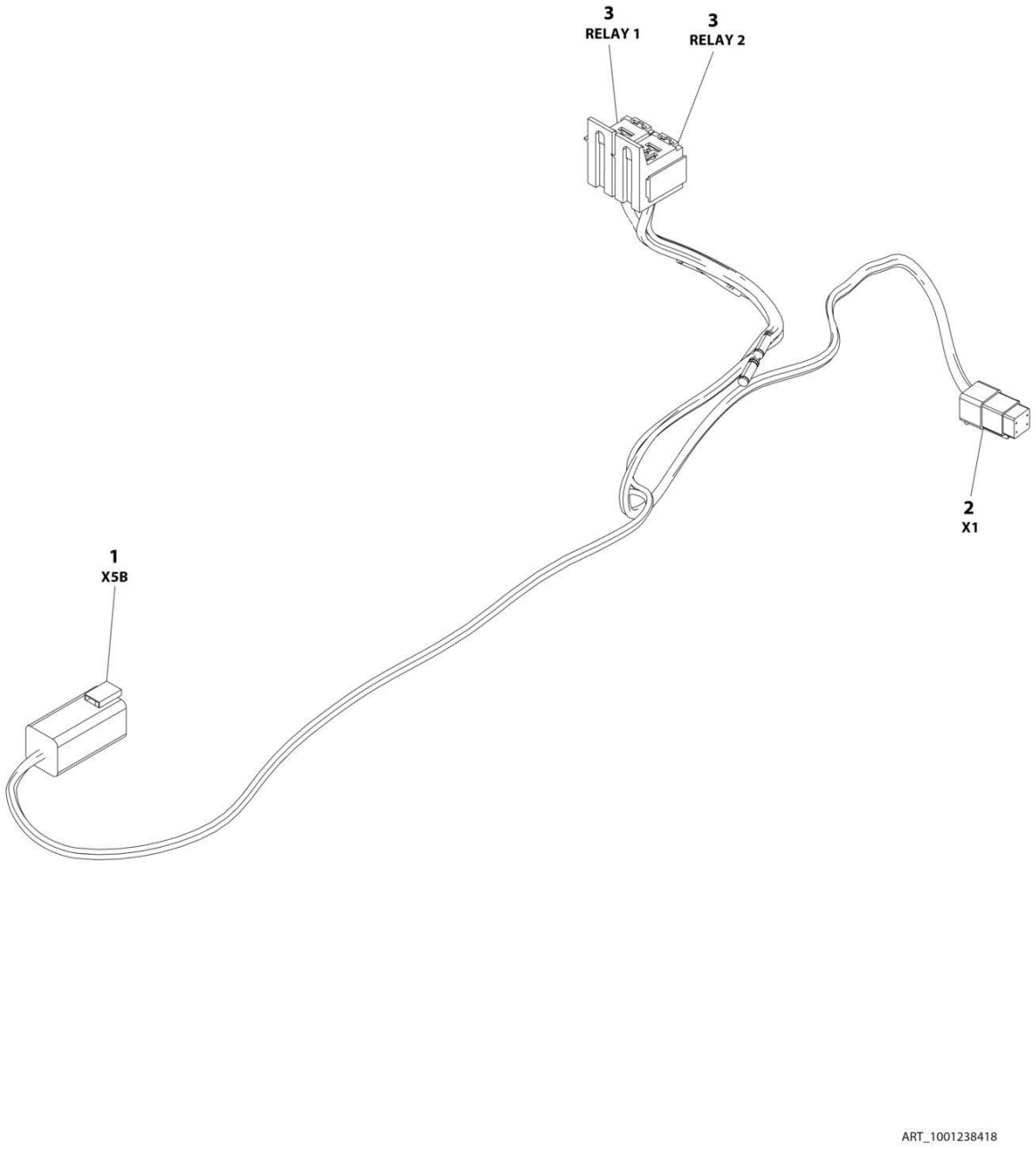

FIGURE 8-81. SKYLINE HARNESS

ITEM	PART NUMBER	QTY	DESCRIPTION	REV
	1001238418	Ref	SKYLINE HARNESS	B
1	4460899	1	Connector - 6 Position	
1	4460464	4	Pin, Male	
1	4460466	2	Plug, Terminal	
2	4461077	1	Connector - 4 Position	
2	1001126009	4	Socket, Female	
3	1001186432	2	Plug, Relay	
3	1001118388	5	Terminal	
3	1001118384	3	Terminal	
3	3740086	2	Relay	

FIGURE 8-82. STROBE LIGHT HARNESS (AMBER)

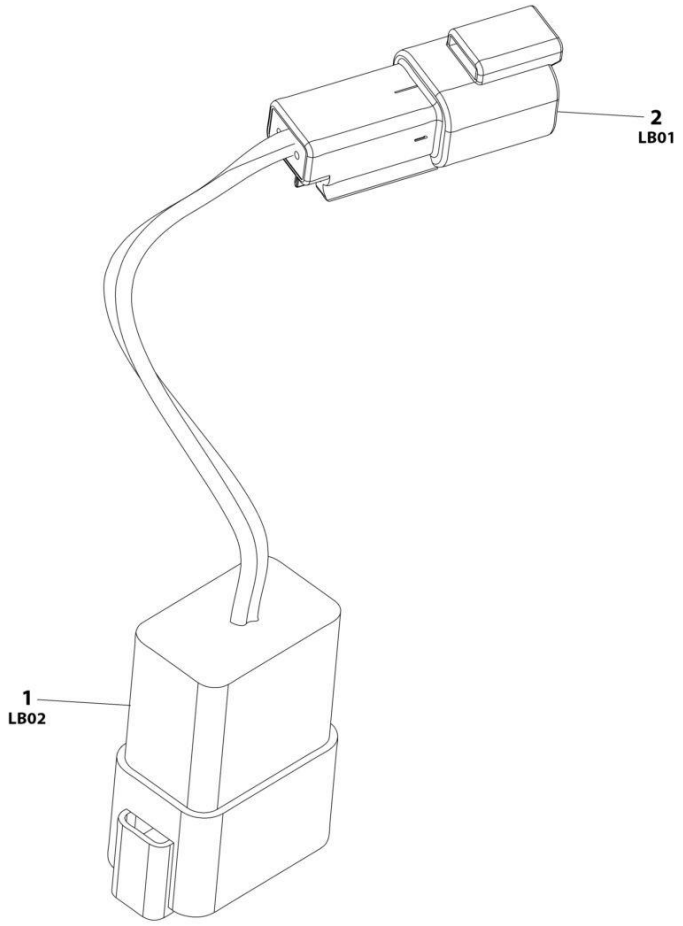

FIGURE 8-82. STROBE LIGHT HARNESS (AMBER)

ITEM	PART NUMBER	QTY	DESCRIPTION	REV
	1001283776	Ref	STROBE LIGHT HARNESS (AMBER)	A
1	4460931	1	Connector	
1	4460464	2	Pin	
1	4460466	6	Plug	
2	4460897	1	Connector	
2	4460464	2	Pin	

FIGURE 8-83. TILT SENSOR HARNESS (LEFT)

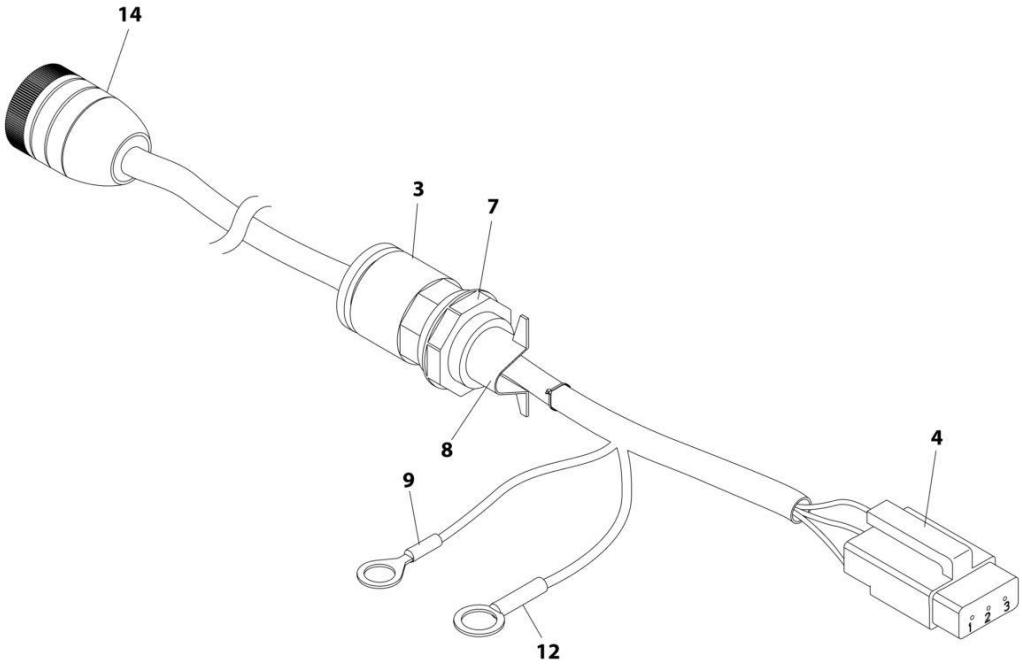

FIGURE 8-83. TILT SENSOR HARNESS (LEFT)

ITEM	PART NUMBER	QTY	DESCRIPTION	REV
	4922948	Ref	TILT SENSOR HARNESS (LEFT)	E
3	1560011	1	Connector, Conduit	
4	4460911	1	Connector - 3 Position	
4	4460912	1	Lock, Wedge	
4	4460918	3	Pin, Male	
7	1560012	1	Nut, Conduit	
8	1320309	1	Clamp, Cable	
9	4460702	1	Terminal, Eyelet	
10	4240032	2	Tie-Strap (Not Shown)	
12	4460256	1	Terminal, Eyelet	
14	4461013	1	Connector - 6 Position	

FIGURE 8-84. TILT SENSOR HARNESS (RIGHT)

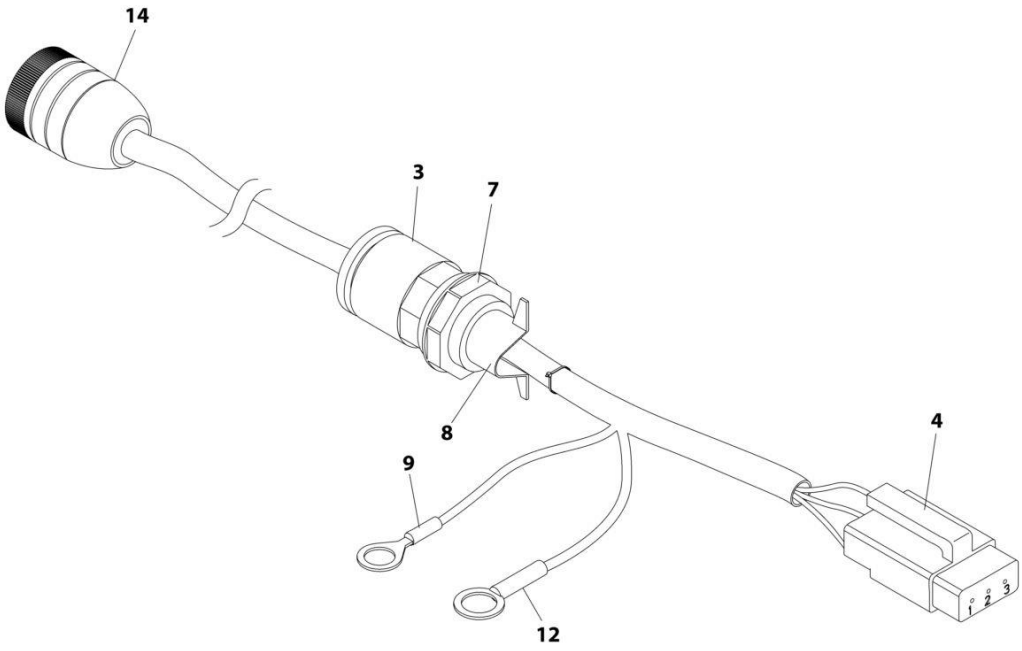

FIGURE 8-84. TILT SENSOR HARNESS (RIGHT)

ITEM	PART NUMBER	QTY	DESCRIPTION	REV
	4922947	Ref	TILT SENSOR HARNESS (RIGHT)	E
3	1560011	1	Connector, Conduit	
4	4460911	1	Connector - 3 Position	
4	4460912	1	Lock, Wedge	
4	4460918	3	Pin, Male	
7	1560012	1	Nut, Conduit	
8	1320309	1	Clamp, Cable	
9	4460702	1	Terminal, Eyelet	
10	4240032	2	Tie-Strap (Not Shown)	
12	4460256	1	Terminal, Eyelet	
14	4461013	1	Connector - 6 Position	

SECTION 9 - DECALS

SECTION 9 - DECALS

FIGURE 9-1. DECAL INSTALLATION - ANSI SPEC

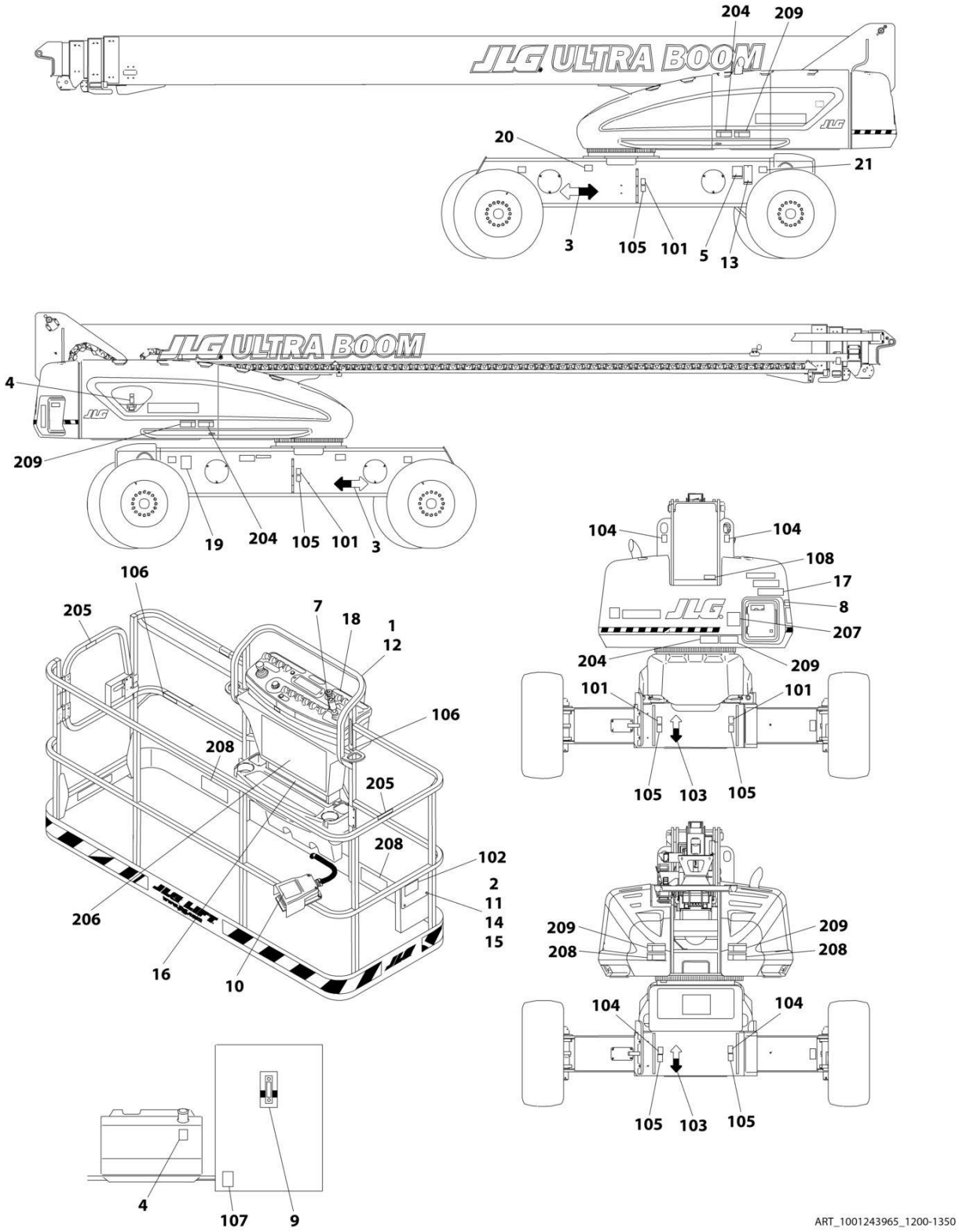

FIGURE 9-1. DECAL INSTALLATION - ANSI SPEC

ITEM	PART NUMBER	QTY	DESCRIPTION	REV
	1001248554	Ref	DECAL INSTALLATION - REFERENCE CHART	D
	1001243965	Ref	DECAL INSTALLATION - ANSI SPEC	B
1	0100048	AR	Grease, Dielectric	
2	0641406	4	Bolt 1/4 x 3/4	
3	1701501	4	Decal - Arrow	
4	1701505	2	Decal - Fuel	
5	See Note	1	Decal - Bar Code (Note: Not Available For Purchase)	
6	1704972	1	Decal - Warning Explosion/Fire (Not Shown - Located on Engine Air Filter Housing)	
7	1705351	1	Decal - Drive/Steer Instructions	
8	1705492	1	Decal - Tip Over Hazard	
9	1705511	1	Decal - Oil Level	
10	3252347	1	Decal - Footswitch	
11	3311405	4	Nut 1/4	
12	3520174	3	Plug	
13	3820001	2	Rivet	
14	4751400	4	Washer 1/4	
15	91403230	1	Box, Manual Storage	
16	1001253048	1	Decal - Capacity (Platform)	
17	1001253049	1	Decal - Capacity (Ground Control)	
18	1001122611	1	Decal - Stop	
19	1001131269	1	Decal - Patent	
20	1001223055	1	Decal - Yearly Inspection	
21	1001223453	1	Decal - Ices	
100	1001248539	1	Decal Master Kit (Not Shown - Includes Items 101-108)	
101	1701499	4	Decal - No Lift	
102	1701509	1	Decal - Manual	
103	1701529	2	Decal - Arrow	
104	1703811	8	Decal - Tie Down/Lift	
105	1703814	6	Decal - Tie Down	
106	1704277	4	Decal - Attach Lanyard Here	
107	1704412	1	Decal - Hydraulic Oil Chart	
108	3251243	1	Nameplate - 120V-60Hz	
200	1001248547	1	Decal Kit (Not Shown - Includes Items 204-209)	
204	1703953	7	Decal - Warning/Crushing	
205	1702868	2	Decal - No Hands	
206	1001231315	1	Decal - Danger/Warning (Platform)	
207	1705336	1	Decal - Danger/Warning (Ground Control)	
208	1703804	5	Decal - Warning Crushing	
209	1703805	5	Decal - Danger/Electrocution	

SECTION 9 - DECALS

FIGURE 9-2. DECAL INSTALLATION - AUSTRALIAN SPEC

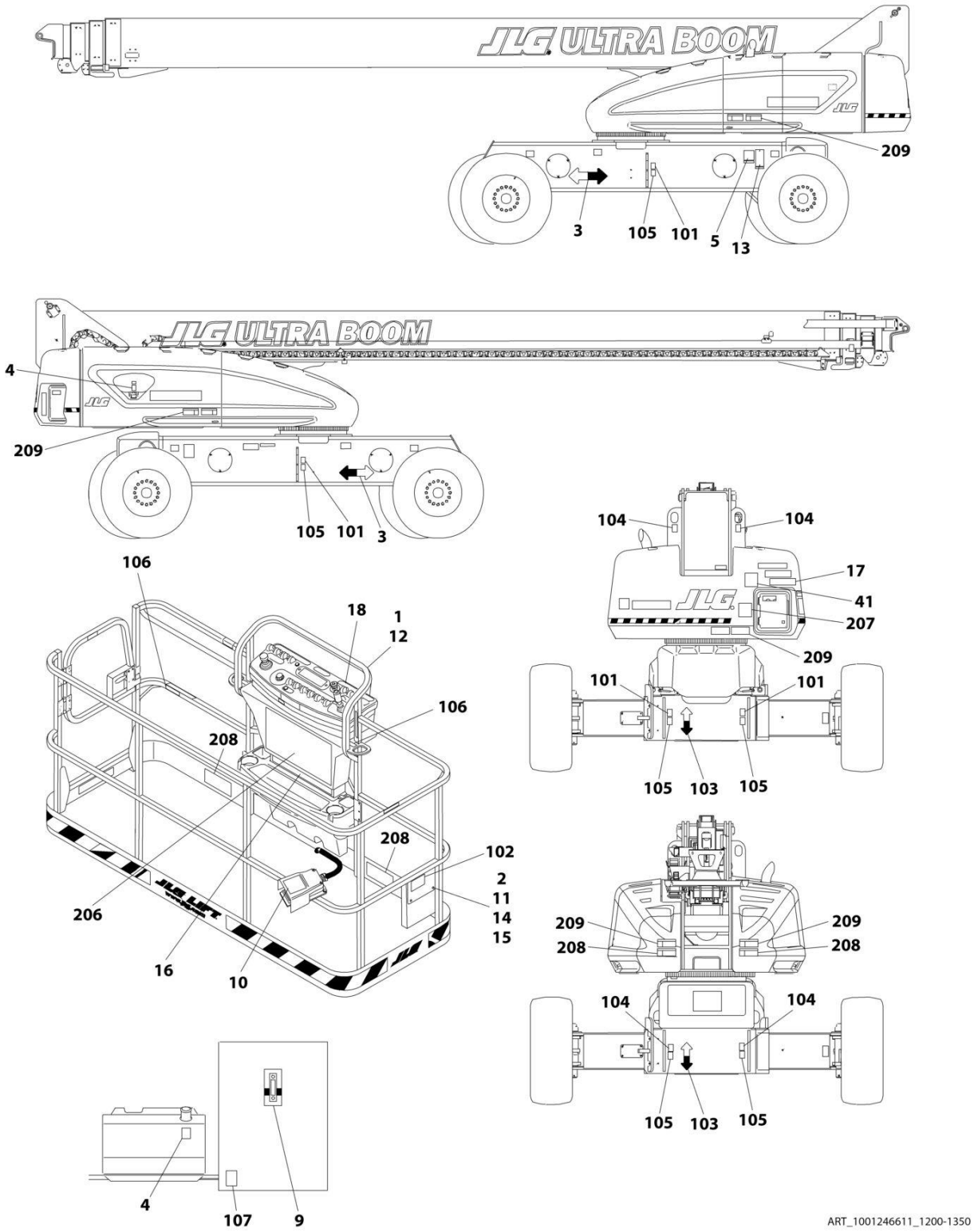

FIGURE 9-2. DECAL INSTALLATION - AUSTRALIAN SPEC

ITEM	PART NUMBER	QTY	DESCRIPTION	REV
	1001248554	Ref	DECAL INSTALLATION - REFERENCE CHART	D
	1001246611	Ref	DECAL INSTALLATION - AUSTRALIAN SPEC	A
1	0100048	AR	Grease, Dielectric	
2	0641406	4	Bolt 1/4 x 3/4	
3	1701501	4	Decal - Arrow	
4	1701505	2	Decal - Fuel	
5	See Note	1	Decal - Bar Code (Note: Not Available For Purchase)	
6	1706098	1	Decal - Warning Explosion/Fire (Not Shown - Located on Engine Air Filter Housing)	
9	1705511	1	Decal - Oil Level	
10	1705828	1	Decal - Footswitch	
11	3311405	4	Nut 1/4	
12	3520174	3	Plug	
13	3820001	6	Rivet	
14	4751400	4	Washer 1/4	
15	91403230	1	Box, Manual Storage	
16	1706770	1	Decal - Capacity (Platform)	
17	1705468	1	Decal - Capacity (Ground Control)	
18	1705174	1	Decal - Stop	
41	1001112551	1	Decal - Emergency Controls (Australian Spec)	
100	1001248540	1	Decal Master Kit (Not Shown - Includes Items 101-107)	
101	1701499	4	Decal - No Lift	
102	1701509	1	Decal - Manual	
103	1701529	2	Decal - Arrow	
104	1703811	4	Decal - Tie Down/Lift	
105	1703814	6	Decal - Tie Down	
106	1704277	4	Decal - Attach Lanyard Here	
107	1704412	1	Decal - Hydraulic Oil Chart	
200	1001248546	1	Decal Kit (Not Shown - Includes Items 206-209)	
206	1705921	1	Decal - Tipping/Electrical (Platform)	
207	1705822	1	Decal - Electrical/Safety (Ground Control)	
208	1701518	10	Decal - Warning Crushing	
209	1705961	5	Decal - Danger Electrocution	

SECTION 9 - DECALS

FIGURE 9-3. DECAL INSTALLATION - BRAZIL SPEC (PORTGUESE/ENGLISH)

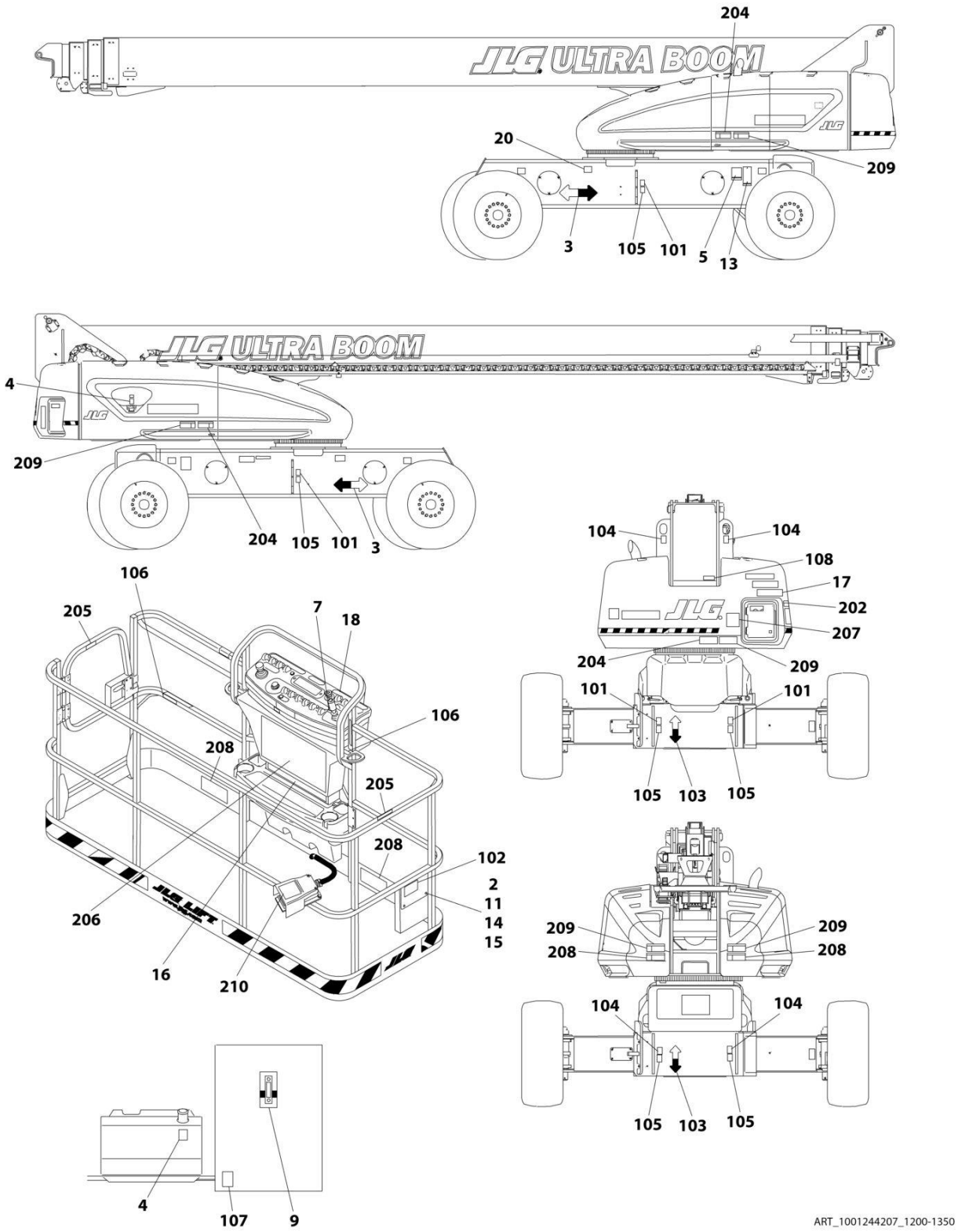

FIGURE 9-3. DECAL INSTALLATION - BRAZIL SPEC (PORTGUESE/ENGLISH)

ITEM	PART NUMBER	QTY	DESCRIPTION	REV
	1001248554	Ref	DECAL INSTALLATION - REFERENCE CHART	D
	1001244207	Ref	DECAL INSTALLATION - BRAZIL SPEC (PORTGUESE/ENGLISH)	B
2	0641406	4	Bolt 1/4 x 3/4	
3	1701501	4	Decal - Arrow	
4	1701505	2	Decal - Fuel	
5	See Note	1	Decal - Bar Code (Note: Not Available For Purchase)	
6	1706059	1	Decal - Warning Explosion/Fire (Not Shown - Located on Engine Air Filter Housing)	
7	1705905	1	Decal - Drive/Steer Instructions	
9	1705511	1	Decal - Oil Level	
11	3311405	4	Nut 1/4	
13	3820001	2	Rivet	
14	4751400	4	Washer 1/4	
15	91403230	1	Box, Manual Storage	
16	1001253057	1	Decal - Capacity (Platform)	
17	1001253058	1	Decal - Capacity (Ground Control)	
18	1001122611	1	Decal - Stop	
20	1001224052	1	Decal - Yearly Inspection	
100	1001248539	1	Decal Master Kit (Not Shown - Includes Items 101-108)	
101	1701499	4	Decal - No Lift	
102	1701509	1	Decal - Manual	
103	1701529	2	Decal - Arrow	
104	1703811	8	Decal - Tie Down/Lift	
105	1703814	6	Decal - Tie Down	
106	1704277	4	Decal - Attach Lanyard Here	
107	1704412	1	Decal - Hydraulic Oil Chart	
108	3251243	1	Nameplate - 120V-60Hz	
200	1001248551	1	Decal Kit (Not Shown - Includes Items 202-210)	
202	1705906	1	Decal - Tip Over Hazard	
203	1705901	1	Decal - Inspection (Not Shown)	
204	1705903	7	Decal - Warning/Crushing	
205	1705967	2	Decal - No Hands	
206	1001231319	1	Decal - Danger/Warning (Platform)	
207	1705896	1	Decal - Danger/Warning (Ground Control)	
208	1705898	5	Decal - Warning Crushing	
209	1705897	5	Decal - Danger/Electrocution	
210	1705902	1	Decal - Footswitch	

SECTION 9 - DECALS

FIGURE 9-4. DECAL INSTALLATION - CE & UK CA SPEC

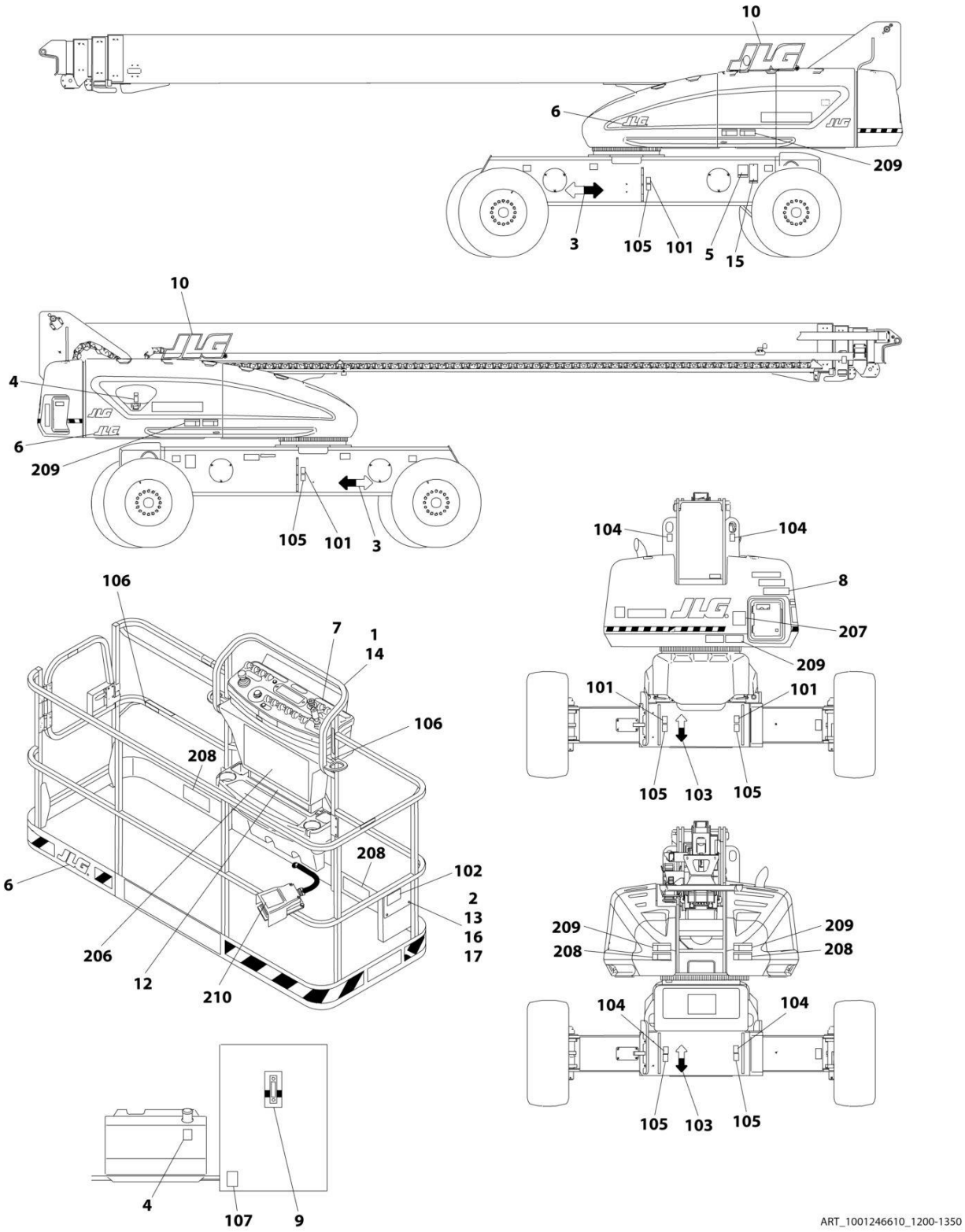

FIGURE 9-4. DECAL INSTALLATION - CE & UK CA SPEC

ITEM	PART NUMBER	QTY	DESCRIPTION	REV
	1001248559	Ref	DECAL INSTALLATION - REFERENCE CHART	B
	1001246610	Ref	DECAL INSTALLATION - CE & UK CA SPEC	A
1	0100048	AR	Grease, Dielectric	
2	0641406	7	Bolt 1/4 x 3/4	
3	1701501	4	Decal - Arrow	
4	1701505	2	Decal - Fuel	
5	See Note	1	Decal - Bar Code (Note: Not Available For Purchase)	
6	1702773	3	Decal - JLG	
7	1705174	1	Decal - Stop	
8	1705468	1	Decal - Capacity (Ground Control)	
9	1705511	1	Decal - Oil Level	
10	1705864	2	Decal - JLG	
11	1706098	1	Decal - Warning Explosion/Fire (Not Shown - Located on Engine Air Filter Housing)	
12	1706770	1	Decal - Capacity (Platform)	
13	3311405	4	Nut 1/4	
14	3520174	3	Plug	
15	3820001	6	Rivet	
16	4751400	7	Washer 1/4	
17	91403230	1	Box, Manual Storage	
100	1001248540	1	Decal Master Kit (Not Shown - Includes Items 101-107)	
101	1701499	4	Decal - No Lift	
102	1701509	1	Decal - Manual	
103	1701529	2	Decal - Arrow	
104	1703811	4	Decal - Tie Down/Lift	
105	1703814	6	Decal - Tie Down	
106	1704277	4	Decal - Attach Lanyard Here	
107	1704412	1	Decal - Hydraulic Oil Chart	
200	1001248546	1	Decal Kit (Not Shown - Includes Items 206-210)	
206	1705921	1	Decal - Tipping/Electrical (Platform)	
207	1705822	1	Decal - Electrical/Safety (Ground Control)	
208	1701518	10	Decal - Warning Crushing	
209	1705961	5	Decal - Danger Electrocution	
210	1705828	1	Decal - Footswitch	

SECTION 9 - DECALS

FIGURE 9-5. DECAL INSTALLATION - CHINESE SPEC (CHINESE/ENGLISH)

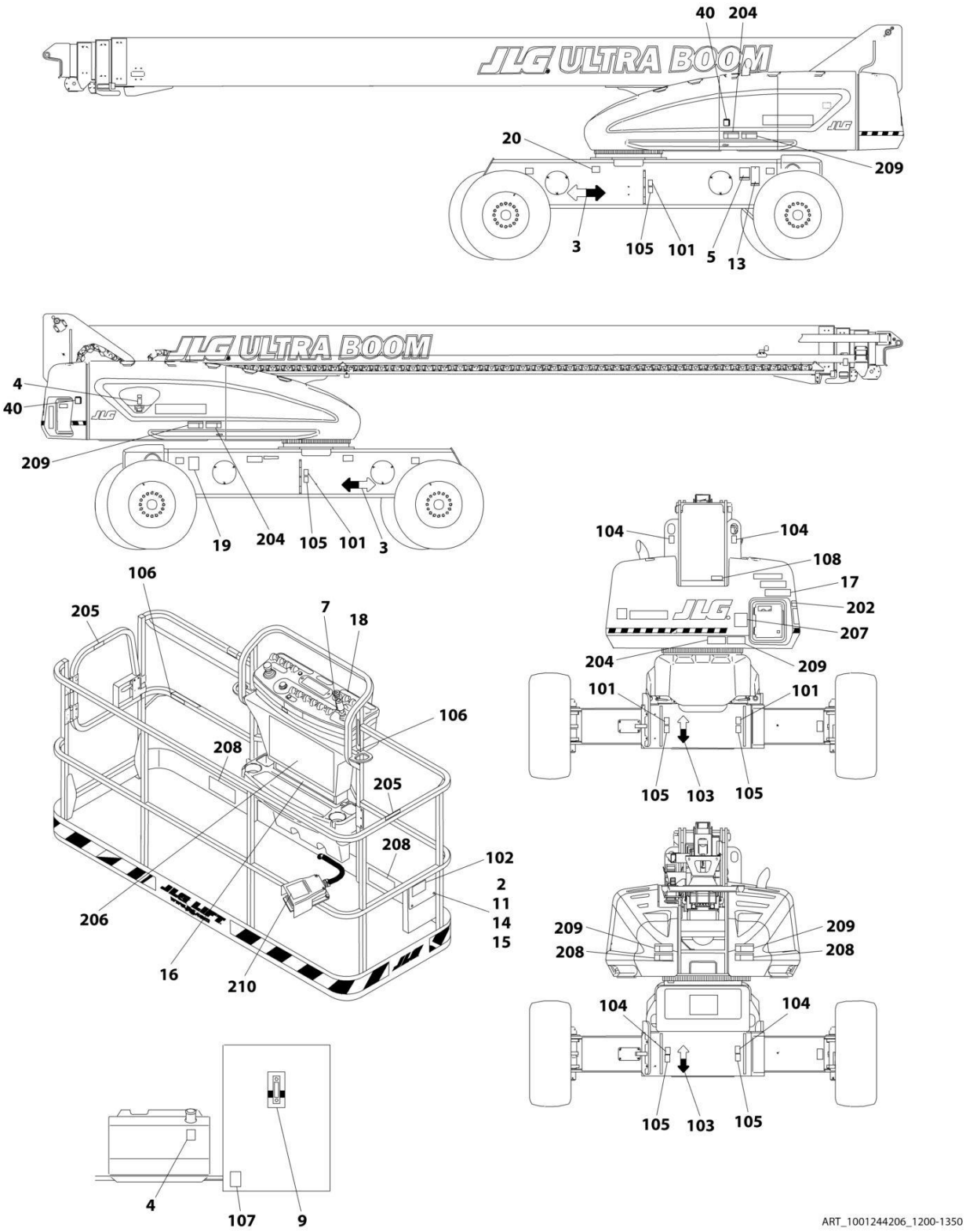

FIGURE 9-5. DECAL INSTALLATION - CHINESE SPEC (CHINESE/ENGLISH)

ITEM	PART NUMBER	QTY	DESCRIPTION	REV
	1001248554	Ref	DECAL INSTALLATION - REFERENCE CHART	D
	1001244206	Ref	DECAL INSTALLATION - CHINESE SPEC (CHINESE/ENGLISH)	B
2	0641406	4	Bolt 1/4 x 3/4	
3	1701501	4	Decal - Arrow	
4	1701505	2	Decal - Fuel	
5	See Note	1	Decal - Bar Code (Note: Not Available For Purchase)	
6	1706060	1	Decal - Warning Explosion/Fire (Not Shown - Located on Engine Air Filter Housing)	
7	1705430	1	Decal - Drive/Steer Instructions	
9	1705511	1	Decal - Oil Level	
11	3311405	4	Nut 1/4	
13	3820001	2	Rivet	
14	4751400	4	Washer 1/4	
15	91403230	1	Box, Manual Storage	
16	1001253054	2	Decal - Capacity (Platform)	
17	1001253056	1	Decal - Capacity (Ground Control)	
18	1001122611	1	Decal - Stop	
20	1001224050	1	Decal - Yearly Inspection	
40	1001244298	2	Decal - Wechat QR Code	
100	1001248539	1	Decal Master Kit (Not Shown - Includes Items 101-108)	
101	1701499	4	Decal - No Lift	
102	1701509	1	Decal - Manual	
103	1701529	2	Decal - Arrow	
104	1703811	8	Decal - Tie Down/Lift	
105	1703814	6	Decal - Tie Down	
106	1704277	4	Decal - Attach Lanyard Here	
107	1704412	1	Decal - Hydraulic Oil Chart	
108	3251243	1	Nameplate - 120V-60Hz	
200	1001248553	1	Decal Kit (Not Shown - Includes Items 202-210)	
202	1001117035	1	Decal - Tip Over Hazard	
204	1703943	7	Decal - Warning/Crushing	
205	1001116846	2	Decal - No Hands	
206	1001231321	1	Decal - Danger/Warning (Platform)	
207	1001116849	2	Decal - Danger/Warning (Ground Control)	
208	1703949	5	Decal - Warning Crushing	
209	1001116851	5	Decal - Danger/Electrocution	
210	1703982	1	Decal - Footswitch	

SECTION 9 - DECALS

FIGURE 9-6. DECAL INSTALLATION - CSA SPEC (ENGLISH/FRENCH)

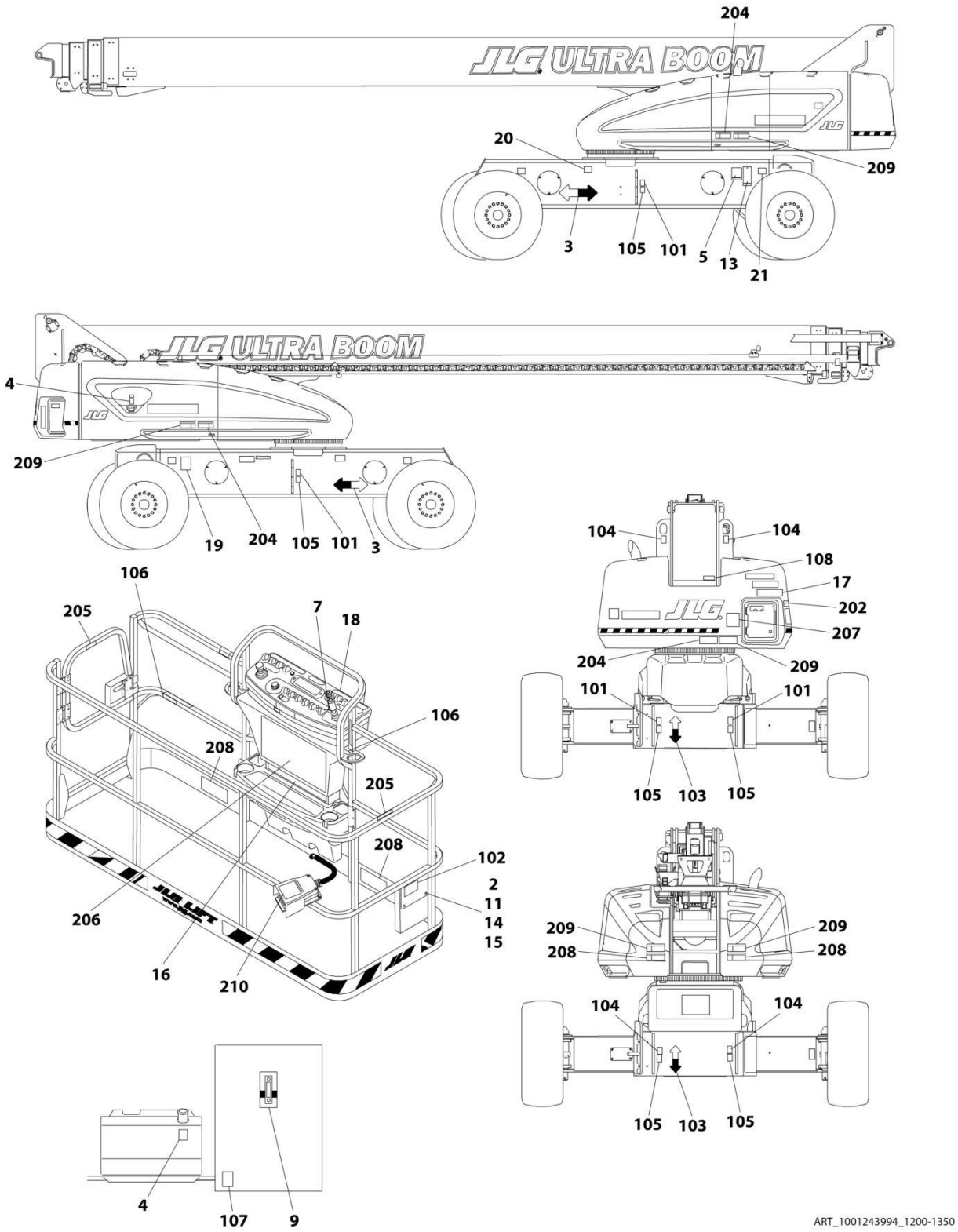

FIGURE 9-6. DECAL INSTALLATION - CSA SPEC (ENGLISH/FRENCH)

ITEM	PART NUMBER	QTY	DESCRIPTION	REV
	1001248554	Ref	DECAL INSTALLATION - REFERENCE CHART	D
	1001243994	Ref	DECAL INSTALLATION - CSA SPEC (ENGLISH/FRENCH)	B
2	0641406	4	Bolt 1/4 x 3/4	
3	1701501	4	Decal - Arrow	
4	1701505	2	Decal - Fuel	
5	See Note	1	Decal - Bar Code (Note: Not Available For Purchase)	
6	1706064	1	Decal - Warning Explosion/Fire (Not Shown - Located on Engine Air Filter Housing)	
7	1705429	1	Decal - Drive/Steer Instructions	
9	1705511	1	Decal - Oil Level	
11	3311405	4	Nut 1/4	
13	3820001	2	Rivet	
14	4751400	4	Washer 1/4	
15	91403230	1	Box, Manual Storage	
16	1001253050	1	Decal - Capacity (Platform)	
17	1001253051	1	Decal - Capacity (Ground Control)	
18	1705174	1	Decal - Stop	
19	1001131269	1	Decal - Patent	
20	1001223971	1	Decal - Yearly Inspection	
21	1001223453	1	Decal - Ices	
100	1001248539	1	Decal Master Kit (Not Shown - Includes Items 101-108)	
101	1701499	4	Decal - No Lift	
102	1701509	1	Decal - Manual	
103	1701529	2	Decal - Arrow	
104	1703811	8	Decal - Tie Down/Lift	
105	1703814	6	Decal - Tie Down	
106	1704277	4	Decal - Attach Lanyard Here	
107	1704412	1	Decal - Hydraulic Oil Chart	
108	3251243	1	Nameplate - 120V-60Hz	
200	1001248548	1	Decal Kit (Not Shown - Includes Items 202-210)	
202	1705505	1	Decal - Tip Over Hazard	
204	1703942	7	Decal - Warning/Crushing	
205	1704000	2	Decal - No Hands	
206	1001231316	1	Decal - Danger/Warning (Platform)	
207	1705347	1	Decal - Danger/Warning (Ground Control)	
208	1703948	5	Decal - Warning Crushing	
209	1703936	5	Decal - Danger/Electrocution	
210	1703984	1	Decal - Footswitch	

SECTION 9 - DECALS

FIGURE 9-7. DECAL INSTALLATION - JAPANESE SPEC (JAPANESE/ENGLISH)

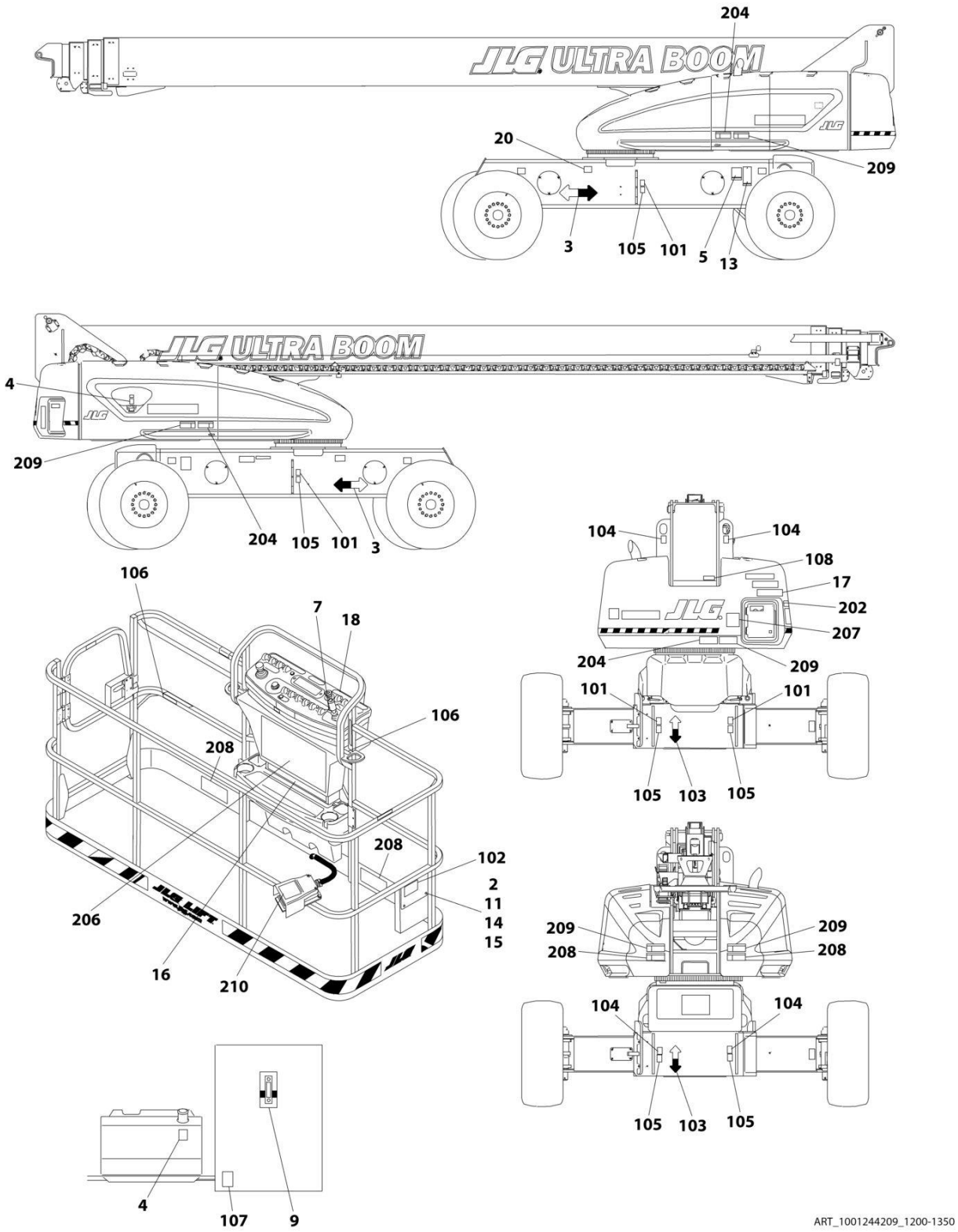

FIGURE 9-7. DECAL INSTALLATION - JAPANESE SPEC (JAPANESE/ENGLISH)

ITEM	PART NUMBER	QTY	DESCRIPTION	REV
	1001248554	Ref	DECAL INSTALLATION - REFERENCE CHART	D
	1001244209	Ref	DECAL INSTALLATION - JAPANESE SPEC (JAPANESE/ENGLISH)	B
2	0641406	4	Bolt 1/4 x 3/4	
3	1701501	4	Decal - Arrow	
4	1701505	2	Decal - Fuel	
5	See Note	1	Decal - Bar Code (Note: Not Available For Purchase)	
6	1706062	1	Decal - Warning Explosion/Fire (Not Shown - Located on Engine Air Filter Housing)	
7	1705426	1	Decal - Drive/Steer Instructions	
9	1705511	1	Decal - Oil Level	
11	3311405	4	Nut 1/4	
13	3820001	2	Rivet	
14	4751400	4	Washer 1/4	
15	91403230	1	Box, Manual Storage	
16	1001253061	1	Decal - Capacity (Platform)	
17	1001253062	1	Decal - Capacity (Ground Control)	
18	1001122611	1	Decal - Stop	
20	1001224053	1	Decal - Yearly Inspection	
100	1001248539	1	Decal Master Kit (Not Shown - Includes Items 101-108)	
101	1701499	4	Decal - No Lift	
102	1701509	1	Decal - Manual	
103	1701529	2	Decal - Arrow	
104	1703811	8	Decal - Tie Down/Lift	
105	1703814	6	Decal - Tie Down	
106	1704277	4	Decal - Attach Lanyard Here	
107	1704412	1	Decal - Hydraulic Oil Chart	
108	3251243	1	Nameplate - 120V-60Hz	
200	1001248552	1	Decal Kit (Not Shown - Includes Items 202-210)	
202	1705493	1	Decal - Tip Over Hazard	
204	1703944	7	Decal - Warning/Crushing	
206	1001231320	1	Decal - Danger/Warning (Platform)	
207	1705344	1	Decal - Danger/Warning (Ground Control)	
208	1703950	5	Decal - Warning Crushing	
209	1703938	5	Decal - Danger/Electrocution	
210	1703980	1	Decal - Footswitch	

FIGURE 9-8. DECAL INSTALLATION - KOREAN SPEC (KOREAN/ENGLISH)

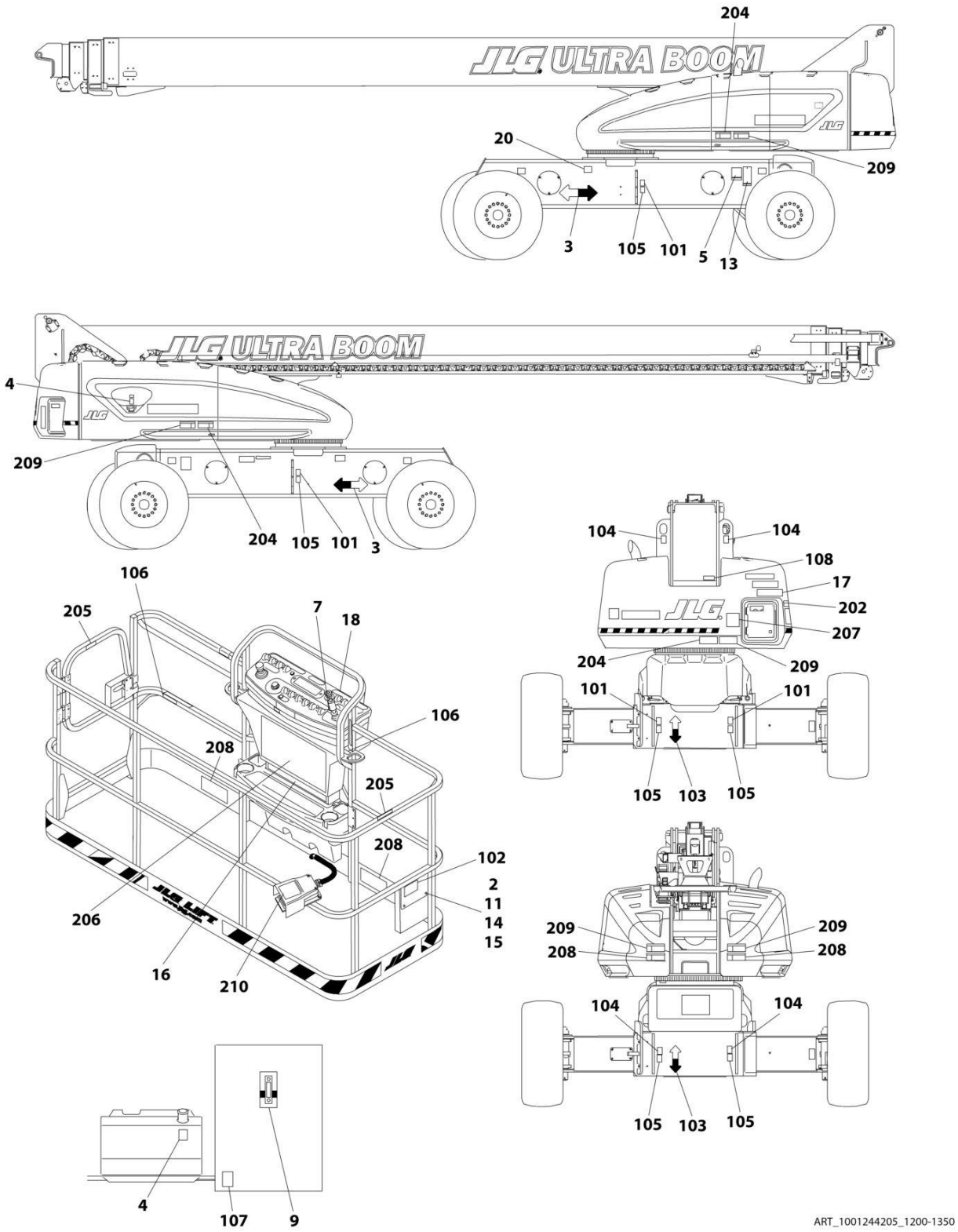

FIGURE 9-8. DECAL INSTALLATION - KOREAN SPEC (KOREAN/ENGLISH)

ITEM	PART NUMBER	QTY	DESCRIPTION	REV
	1001248554	Ref	DECAL INSTALLATION - REFERENCE CHART	D
	1001244205	Ref	DECAL INSTALLATION - KOREAN SPEC (KOREAN/ENGLISH)	B
2	0641406	4	Bolt 1/4 x 3/4	
3	1701501	4	Decal - Arrow	
4	1701505	2	Decal - Fuel	
5	See Note	1	Decal - Bar Code (Note: Not Available For Purchase)	
6	1706061	1	Decal - Warning Explosion/Fire (Not Shown - Located on Engine Air Filter Housing)	
7	1705427	1	Decal - Drive/Steer Instructions	
9	1705511	1	Decal - Oil Level	
11	3311405	4	Nut 1/4	
13	3820001	2	Rivet	
14	4751400	4	Washer 1/4	
15	91403230	1	Box, Manual Storage	
16	1001253052	1	Decal - Capacity (Platform)	
17	1001253053	1	Decal - Capacity (Ground Control)	
18	1001122611	1	Decal - Stop	
20	1001224048	1	Decal - Yearly Inspection	
100	1001248539	1	Decal Master Kit (Not Shown - Includes Items 101-108)	
101	1701499	4	Decal - No Lift	
102	1701509	1	Decal - Manual	
103	1701529	2	Decal - Arrow	
104	1703811	8	Decal - Tie Down/Lift	
105	1703814	6	Decal - Tie Down	
106	1704277	4	Decal - Attach Lanyard Here	
107	1704412	1	Decal - Hydraulic Oil Chart	
108	3251243	1	Nameplate - 120V-60Hz	
200	1001248549	1	Decal Kit (Not Shown - Includes Items 202-210)	
202	1705503	AR	Decal - Tip Over Hazard	
204	1703945	7	Decal - Warning/Crushing	
205	1705969	2	Decal - No Hands	
206	1001231317	1	Decal - Danger/Warning (Platform)	
207	1705345	1	Decal - Danger/Warning (Ground Control)	
208	1703951	5	Decal - Warning Crushing	
209	1703939	5	Decal - Danger/Electrocution	
210	1703981	1	Decal - Footswitch	

SECTION 9 - DECALS

FIGURE 9-9. DECAL INSTALLATION - LATIN AMERICAN SPEC (SPANISH/ENGLISH)

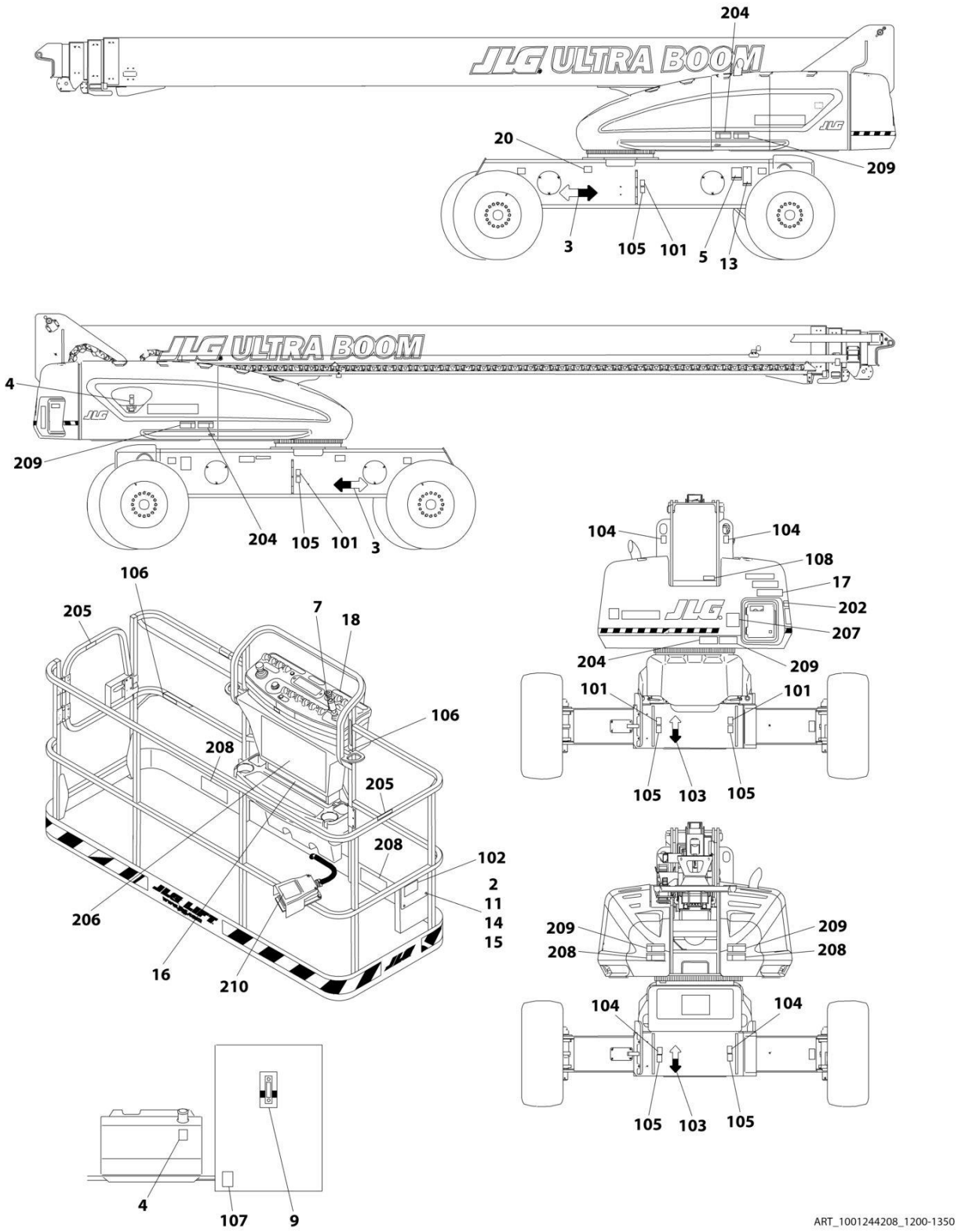

FIGURE 9-9. DECAL INSTALLATION - LATIN AMERICAN SPEC (SPANISH/ENGLISH)

ITEM	PART NUMBER	QTY	DESCRIPTION	REV
	1001248554	Ref	DECAL INSTALLATION - REFERENCE CHART	D
	1001244208	Ref	DECAL INSTALLATION - LATIN AMERICAN SPEC (SPANISH/ENGLISH)	B
2	0641406	4	Bolt 1/4 x 3/4	
3	1701501	4	Decal - Arrow	
4	1701505	2	Decal - Fuel	
5	See Note	1	Decal - Bar Code (Note: Not Available For Purchase)	
6	1706061	1	Decal - Warning Explosion/Fire (Not Shown - Located on Engine Air Filter Housing)	
7	1705910	1	Decal - Drive/Steer Instructions	
9	1705511	1	Decal - Oil Level	
11	3311405	4	Nut 1/4	
13	3820001	2	Rivet	
14	4751400	4	Washer 1/4	
15	91403230	1	Box, Manual Storage	
16	1001253059	1	Decal - Capacity (Platform)	
17	1001253060	1	Decal - Capacity (Ground Control)	
18	1001122611	1	Decal - Stop	
20	1001224049	1	Decal - Yearly Inspection	
100	1001248539	1	Decal Master Kit (Not Shown - Includes Items 101-108)	
101	1701499	4	Decal - No Lift	
102	1701509	1	Decal - Manual	
103	1701529	2	Decal - Arrow	
104	1703811	8	Decal - Tie Down/Lift	
105	1703814	6	Decal - Tie Down	
106	1704277	4	Decal - Attach Lanyard Here	
107	1704412	1	Decal - Hydraulic Oil Chart	
108	3251243	1	Nameplate - 120V-60Hz	
200	1001248550	1	Decal Kit (Not Shown - Includes Items 202-210)	
202	1705915	AR	Decal - Tip Over Hazard	
204	1703941	7	Decal - Warning/Crushing	
205	1704001	2	Decal - No Hands	
206	1001231318	1	Decal - Danger/Warning (Platform)	
207	1705917	1	Decal - Danger/Warning (Ground Control)	
208	1703947	5	Decal - Warning Crushing	
209	1703935	5	Decal - Danger/Electrocution	
210	1703983	1	Decal - Footswitch	

FIGURE 9-10. DECAL INSTALLATION - OPTIONS

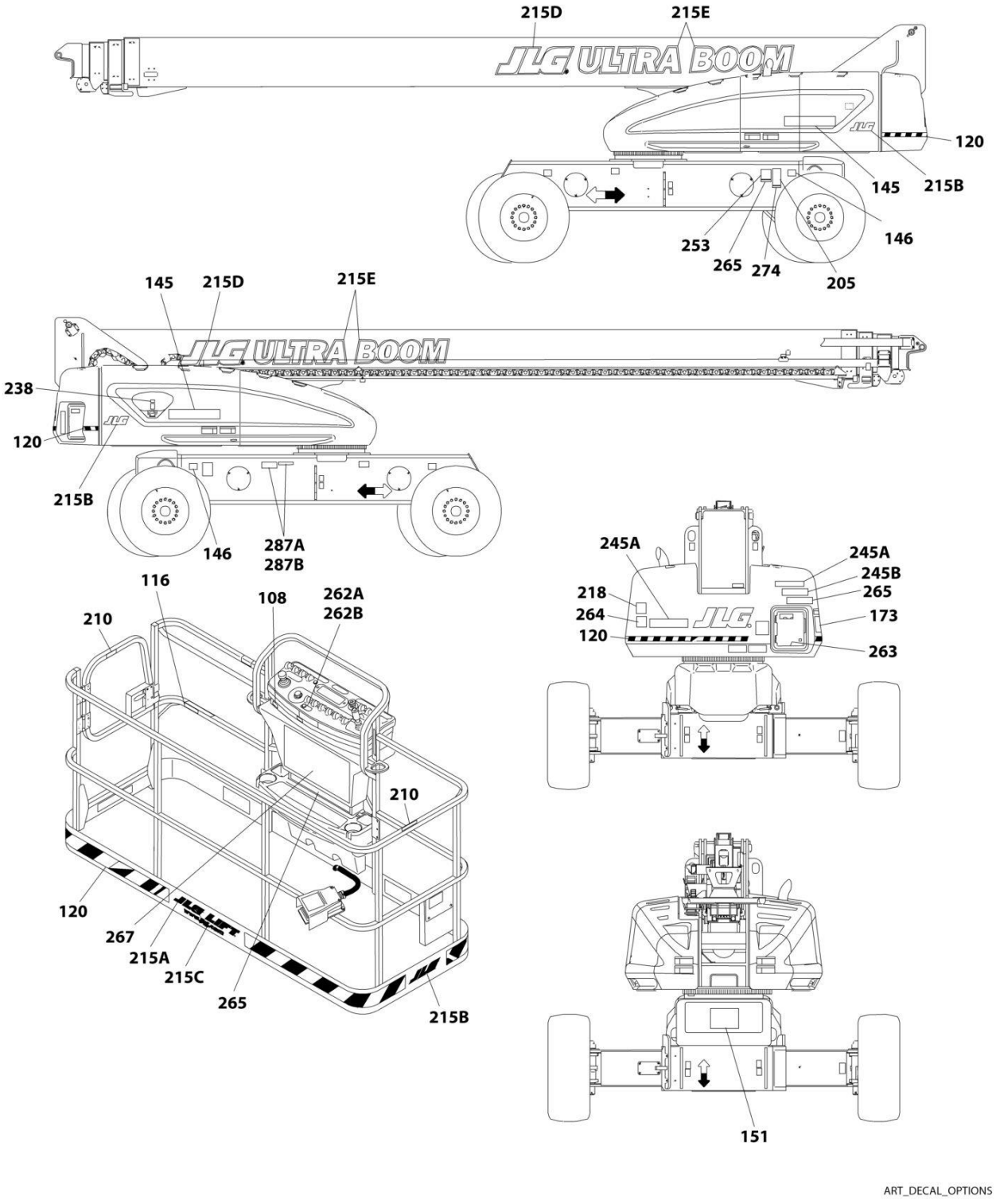

FIGURE 9-10. DECAL INSTALLATION - OPTIONS

ITEM	PART NUMBER	QTY	DESCRIPTION	REV
	1001248554	Ref	DECAL INSTALLATION - REFERENCE CHART	D
	1001261213	Ref	DECAL INSTALLATION - OPTIONS	M
108	1001231801	1	Decal - Warning (Proposition 65) (ANSI Spec Only)	
116	1703175	1	Lanyard Attachment Decal (GM K-1 Spec) (ANSI and CSA Specs Only)	
120	4420051	21.9 ft/ 6.7m	Decal - Warning Stripes	
145	0272523	1	Decal - Model Designation Installation (1200SJP)	B
145	0272522	1	Decal - Model Designation Installation (1350SJP)	B
145A	1001268238	2	Decal - Model (1200SJP)	
145B	1001268239	2	Decal - Model (1350SJP)	
146	2902355	1	Decal - Max Tire Load Kit (1200SJP)	2
146	2902357	1	Decal - Max Tire Load Kit (1350SJP)	2
146A	1705178	4	Decal - Max Tire Load (1200SJP)	
146B	1705167	4	Decal - Max Tire Load (1350SJP)	
151	1001284689	1	Decal - Lift Diagram	
173	1705365	1	Decal - Daily Check List - ANSI Spec	
173	1705365	1	Decal - Daily Check List - Australian Spec	
173	1705452	1	Decal - Daily Check List - Chinese Spec (Chinese/English)	
173	1705451	1	Decal - Daily Check List - CSA Spec (English/French)	
173	1001285278	1	Decal - Daily Check List - Czech Spec	
173	1705552	1	Decal - Daily Check List - Danish Spec	
173	1705444	1	Decal - Daily Check List - Dutch Spec	
173	1705454	1	Decal - Daily Check List - Finnish Spec	
173	1705445	1	Decal - Daily Check List - French Spec	
173	1001172766	1	Decal - Daily Check List - German Spec (German/English)	
173	1705446	1	Decal - Daily Check List - Italian Spec	
173	1705449	1	Decal - Daily Check List - Japanese Spec (Japanese/English)	
173	1705448	1	Decal - Daily Check List - Korean Spec (Korean/English)	
173	1706904	1	Decal - Daily Check List - Latin American Spec (Spanish/English)	
173	1001219085	1	Decal - Daily Check List - Latvian Spec (Latvian/English)	
173	1001177533	1	Decal - Daily Check List - Norwegian Spec (Norwegian/English)	
173	1705554	1	Decal - Daily Check List - Polish Spec	
173	1705456	1	Decal - Daily Check List - Portuguese Spec	
173	1001221738	1	Decal - Daily Check List - Russian Spec	
173	1705447	1	Decal - Daily Check List - Spanish Spec	
173	1705455	1	Decal - Daily Check List - Swedish Spec	
173	1705365	1	Decal - Daily Check List - UK English Spec	
205	See Note	1	Decal - Nameplate (Note: Not Available for Purchase)	
210	1702868	2	Decal - No Hands - ANSI Spec	
210	1704000	2	Decal - No Hands - CSA Spec (French/English)	
210	1705969	2	Decal - No Hands - Korean Spec (Korean/English)	
210	1001218850	2	Decal - No Hands - (CE & UK CA and Australian Specs)	
215	0274730	1	Decal - JLG Decal Installation (ABS Hood)	E
215	1001116025	1	Decal - JLG Decal Installation (Steel Hood)	E
215	1001291459	1	Decal - JLG Decal Installation (Steel Hood)(Chinese)	A
215A	1702774	1	Decal - JLG Lift	
215A	1001288705	1	Decal - JLG Lift (Chinese)	
215B	1702773	1	Decal - JLG (Platform)	
215B	1702773	2	Decal - JLG (Steel Hood)	

SECTION 9 - DECALS

ITEM	PART NUMBER	QTY	DESCRIPTION	REV
215B	1001290348	1	Decal - JLG (Chinese)	
215C	1704885	1	Decal - Website	
215D	1705864	2	Decal - JLG	
215D	1001290403	1	Decal - JLG (Chinese)	
215E	1001267315	2	Decal - Ultra Boom	
218	3251813	1	Decal - USA (ANSI, ANSI Export, China and CSA Specs)	
238	1001125387	1	Decal - Ultra Low Sulfur Fuel (Deutz TCD2.9L4 Engines) (ANSI and CSA Specs)	
238	1001139654	1	Decal - Ultra Low Sulfur Fuel (Deutz TCD2.9L4) (Deutz TCD2.9L4 Stage V) (Deutz TCD2.9L China IV) Engines (ANSI Export (HRC), Japanese, CE & UK CA Specs)	
245	1001120994	1	Decal - ClearSky Telematics Decal Installation	A
245A	1001116208	2	Decal - ClearSky	
245B	1001120989	1	Decal - Radio Frequency Device	
245	1001294761	Ref	Smart Fleet ClearSky Decal Installation	A
245A	1001120989	1	Decal - Radio Frequency	
245B	1001294815	1	Decal - ClearSky	
253	1001143852	1	Decal - EPA (ANSI Export and Australian Specs)	
262A	1001141300	1	Decal - SkyGuard Override	
262B	1001141302	1	Decal - SkyGuard/Soft Touch Override	
263	1001197408	1	Decal - MSSO (CE & UK CA Specs Only)	
264	1705980	1	Decal - Sound Power (106Db) (Deutz TD2011 Engines)	
264	8007508	1	Decal - Sound Power (104Db) (Deutz TD2011 Engines)	
264	1001191526	1	Decal - Sound Power (110Db) (Deutz TCD2.9L4 Engines and Deutz TCD2.9L4 (Stage V) Engines)	
264	1001191525	1	Decal - Sound Power (108Db) (Deutz TCD2.9L4 (Stage V) Engines)	
265	1001275124	1	Decal - Soft Touch (ANSI) (English)	
265	1001275125	1	Decal - Soft Touch (China Spec) (English/Chinese)	
265	1001275126	1	Decal - Soft Touch (Latin American Spec) (English/Spanish)	
265	1001275127	1	Decal - Soft Touch (CSA Spec) (English/French)	
265	1001275128	1	Decal - Soft Touch (Japanese Spec) (English/Japanese)	
265	1001275129	1	Decal - Soft Touch (Korean Spec) (English/Korean)	
265	1001275130	1	Decal - Soft Touch (Brazil Spec) (English/Portuguese)	
265	1001275131	1	Decal - Soft Touch (Australian, CE & UK CA Spec)	
267	1001197529	1	Decal - Quick Reference (Dutch) (Lomax Rentals)	
267	1001197531	1	Decal - Quick Reference (Danish) (Lomax Rentals)	
267	1001180690	1	Decal - Quick Reference (English) (Lomax Rentals)	
267	1001197528	1	Decal - Quick Reference (French) (Lomax Rentals)	
267	1001197530	1	Decal - Quick Reference (German) (Lomax Rentals)	
267	1001197537	1	Decal - Quick Reference (Norwegian) (Lomax Rentals)	
267	1001197533	1	Decal - Quick Reference (Spanish) (Lomax Rentals)	
267	1001197532	1	Decal - Quick Reference (Swedish) (Lomax Rentals)	
274	1001214029	1	Decal Installation - EAC (Russian/CIS Specs)	
274	1001173703	1	Decal - EAC (Russian/CIS Specs)	
287A	1001236398	Ref	Decal Installation - ECO (With DEUTZ TCD2.9L4 (China IV) Engine)	
287A	3820001	8	Rivet	
287A	See Note	NSS	Plate - Environmental Protection (Note: Not Available for Purchase)	
287A	See Note	NSS	Plate - Mein Code (Note: Not Available for Purchase)	
287B	1001292058	1	Decal Installation - ECO (With Deutz TD2.9L4 Engine)	
287B	3820001	8	Rivet	

ITEM	PART NUMBER	QTY	DESCRIPTION	REV
287B	See Note	NSS	Plate - Mein Code (Note: Not Available for Purchase)	
287B	See Note	NSS	Plate - Environmental Protection (Note: Not Available for Purchase)	

SECTION 9 - DECALS

FIGURE 9-11. SKYCUTTER DECAL INSTALLATION (ANSI, ANSI EXPORT, CHINESE & CSA SPECS)

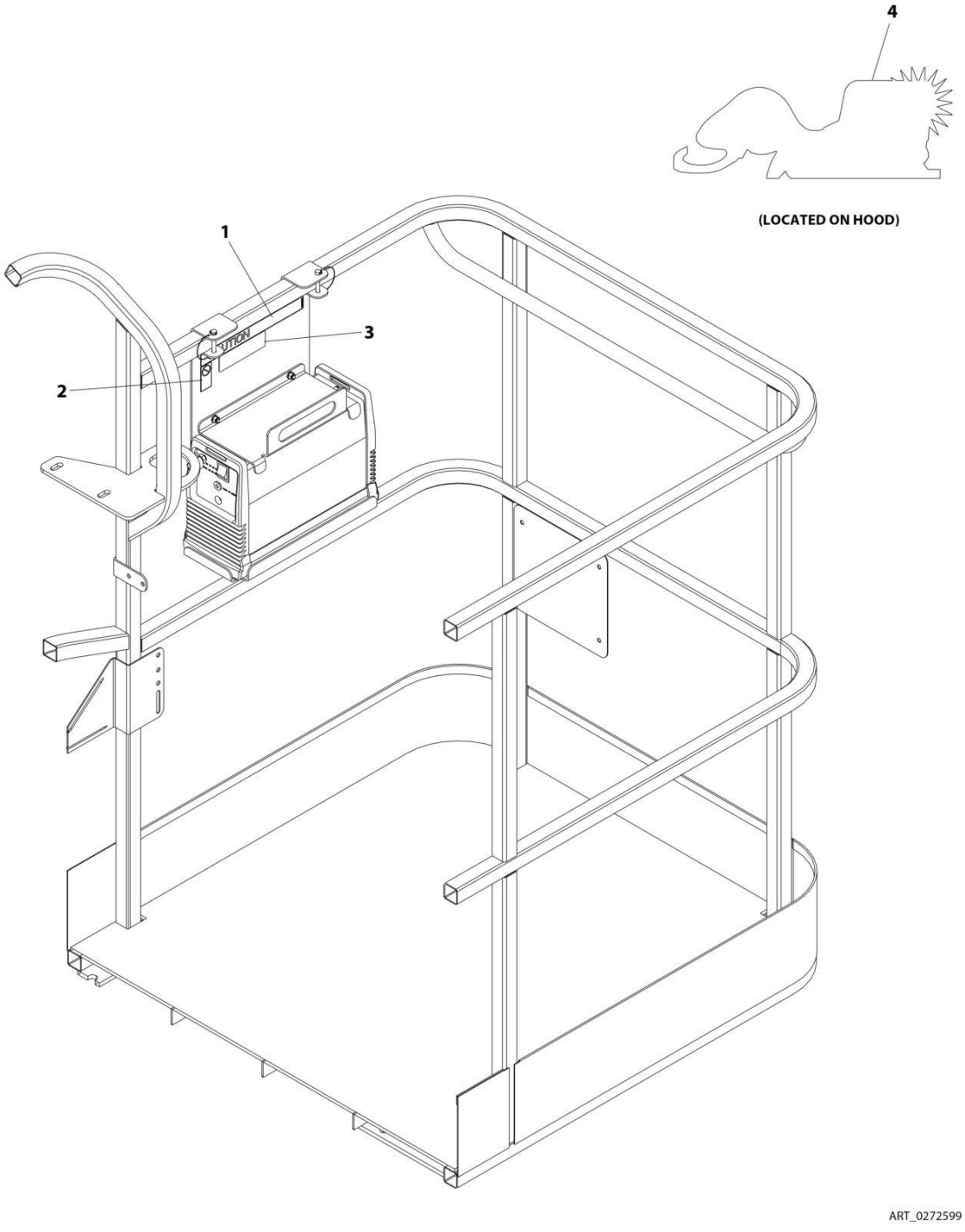

FIGURE 9-11. SKYCUTTER DECAL INSTALLATION (ANSI, ANSI EXPORT, CHINESE & CSA SPECS)

ITEM	PART NUMBER	QTY	DESCRIPTION	REV
	0272599	Ref	SKYCUTTER DECAL INSTALLATION	C
1	1702868	1	Decal - No Hands	
2	1705305	1	Decal - Weld Leads	
3	1001252627	1	Decal - Weight	
4	1705490	2	Decal - SkyCutter	

FIGURE 9-12. SKYCUTTER DECAL INSTALLATION (JAPANESE SPECS)

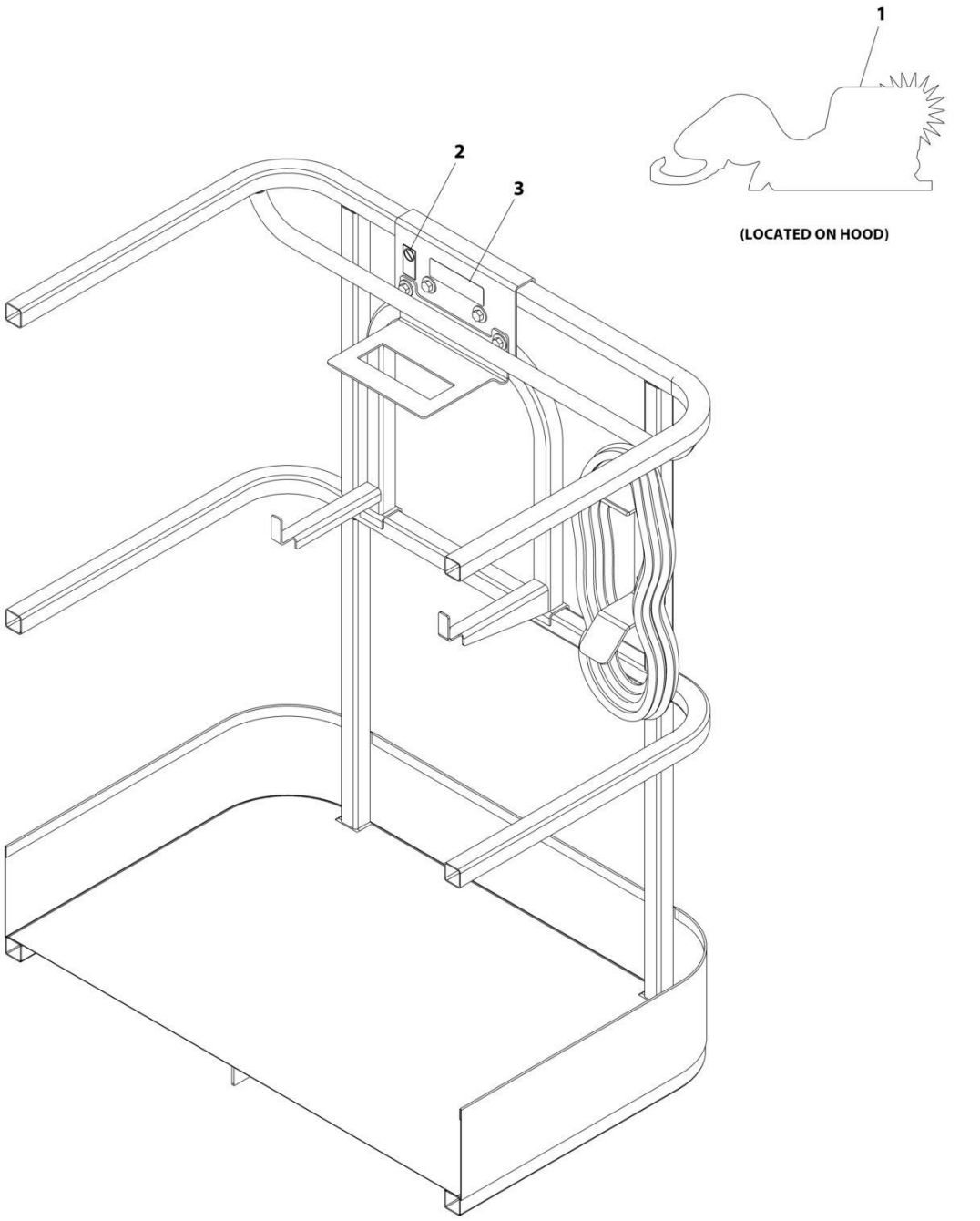

FIGURE 9-12. SKYCUTTER DECAL INSTALLATION (JAPANESE SPECS)

ITEM	PART NUMBER	QTY	DESCRIPTION	REV
	0272607	1	SKYCUTTER DECAL INSTALLATION	C
1	1705490	2	Decal - SkyCutter	
2	1705305	1	Decal - Weld Lead	
3	1001252627	1	Decal - Weight	

FIGURE 9-13. SKYWELDER DECAL INSTALLATION - 50HZ

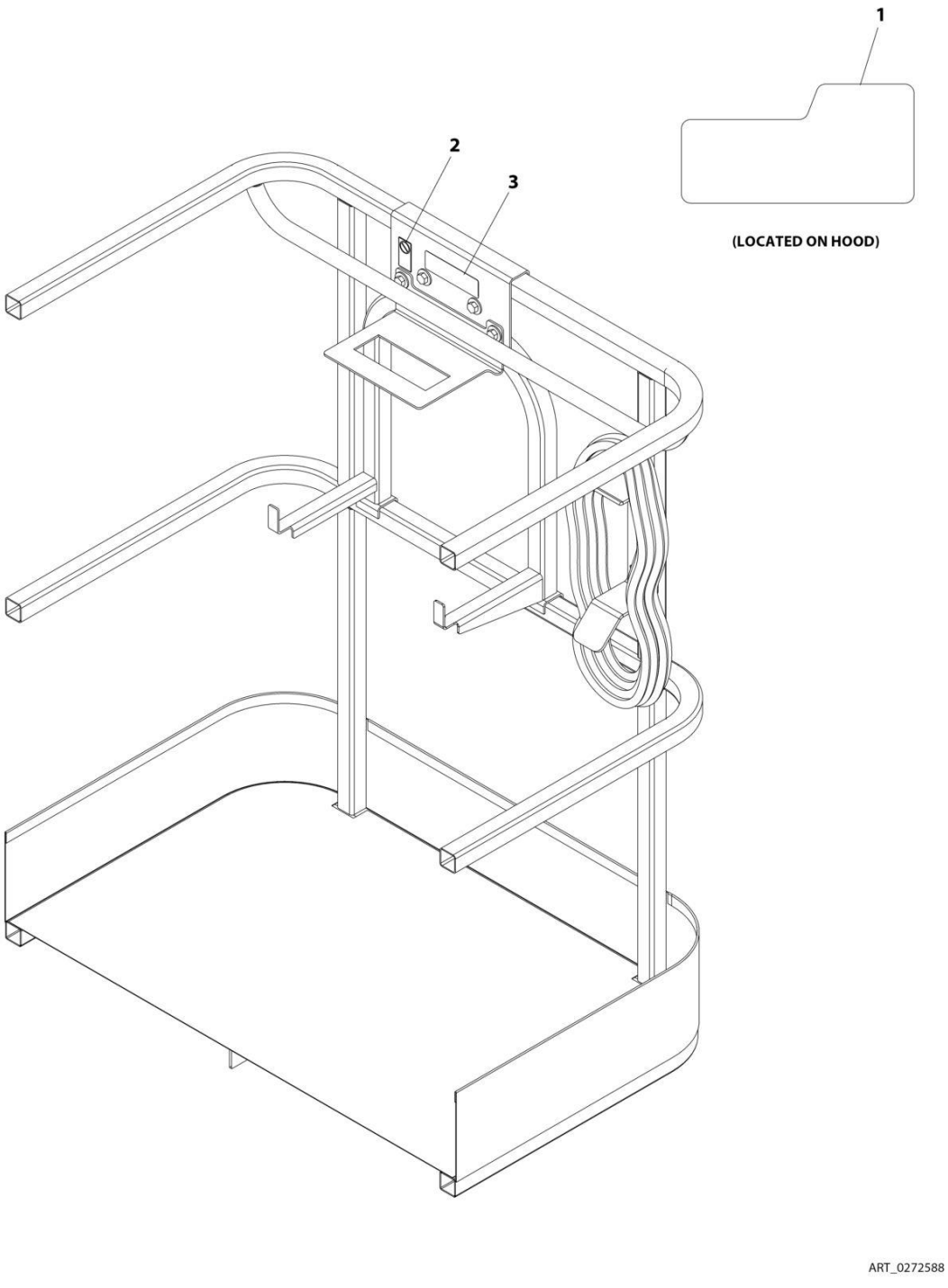

FIGURE 9-13. SKYWELDER DECAL INSTALLATION - 50HZ

ITEM	PART NUMBER	QTY	DESCRIPTION	REV
	0272588	Ref	SKYWELDER DECAL INSTALLATION - 50Hz	B
1	1705355	2	Decal - SkyWelder	
2	1705305	1	Decal - Weld Lead	
3	1001228988	1	Decal - Weight	

FIGURE 9-14. SKYWELDER DECAL INSTALLATION - 60HZ

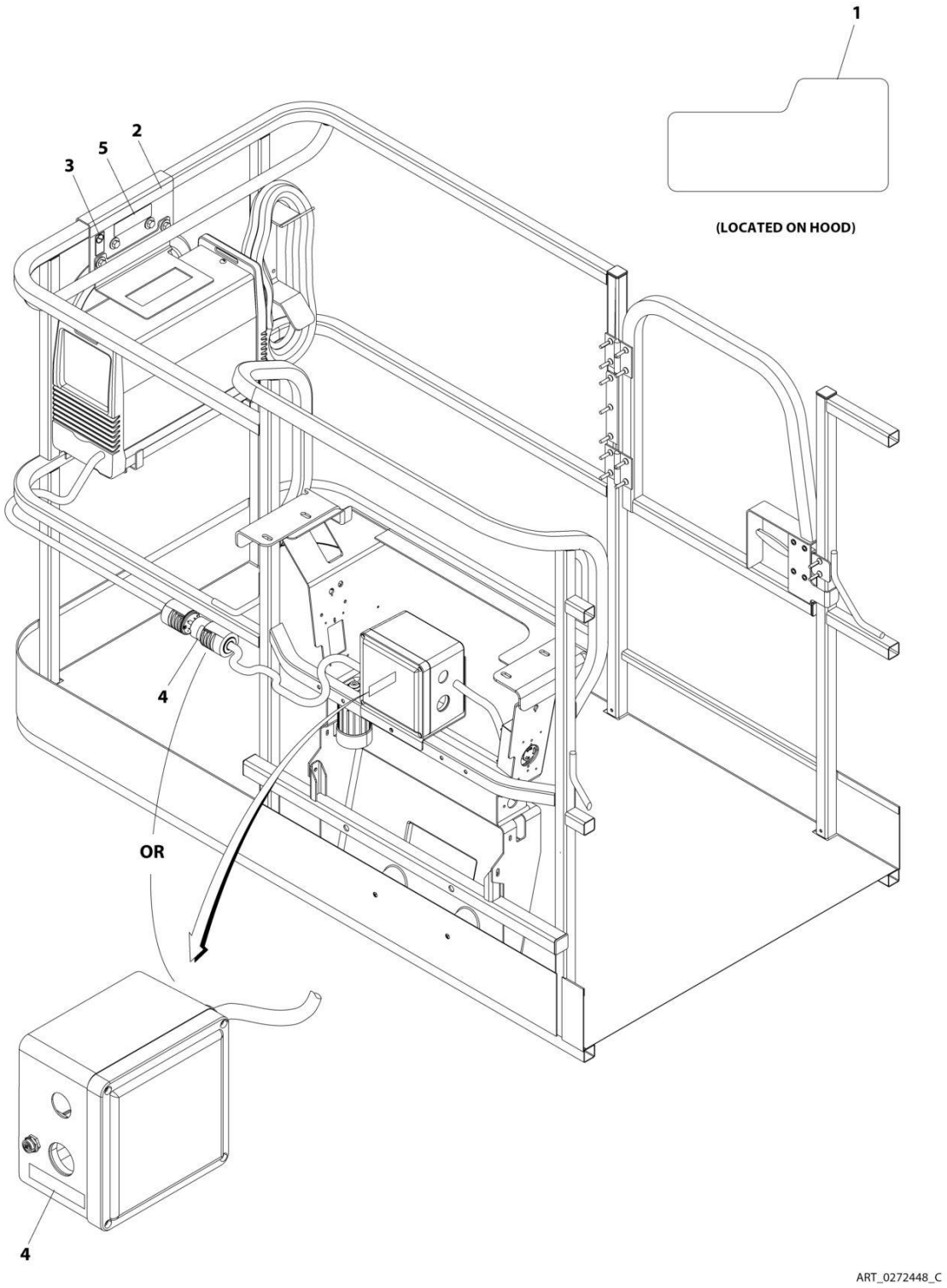

FIGURE 9-14. SKYWELDER DECAL INSTALLATION - 60HZ

ITEM	PART NUMBER	QTY	DESCRIPTION	REV
	0272448	Ref	SKYWELDER DECAL INSTALLATION - 60Hz	C
1	1705355	2	Decal - SkyWelder	
2	1702868	1	Decal - No Hands	
3	1705305	1	Decal - Weld Lead	
4	1705375	1	Decal - 240V - 3 Phase - 60Hz	
5	1001228988	1	Decal - Weight	

SECTION 10 - RECOMMENDED SERVICE PARTS STOCK

SECTION 10 - RECOMMENDED SERVICE PARTS STOCK

FIGURE 10-1. RECOMMENDED SERVICE PARTS STOCK

ITEM	PART NUMBER	QTY	DESCRIPTION	REV
		Ref	Note: The following list will service one machine (built to current production per date on the front cover) with emergency repair parts which can be installed in the field. Parts from the list should be replaced when inventory is depleted to keep service parts stock supplied. For further information, contact your JLG dealer or the JLG Industries Parts Department.	
	4360542	1	Breaker, Circuit (2500W Generator)	
	70001431	1	Breaker, Circuit (Plasma Cutter)	
	4360070	1	Breaker, Circuit 15Amp (4000W & 7500W Generator)	
	1001181045	1	Breaker, Circuit 30mA/16Amp (Breaker Box 16 Amp)	
	7024485	1	Breaker, Circuit 30Amp (7500W 60Hz Generator)	
	70006095	1	Breaker, Circuit 30Amp (7500W 50Hz Generator)	
	1001159118	1	Breaker, GFCI 30Amp (AC Box 240VAC)	
	7018991	1	Coil (Steer Valve & Main Valve)	
	7012944	1	Coil (Traction Valve & Platform Valve)	
	7011354	1	Coil (Main Valve)	
	7017451	1	Coil (Main Valve)	
	7024571	1	Coil (Main Valve & Platform Valve)	
	7026029	1	Contactor, Rotary Circuit (Rotary Coupling & Collector Ring)	
	1001275628	1	Controller, Drive/Steer	
	1001275629	1	Controller, Lift/Swing	
	4360407	1	Controller, Speed (Potentiometer)	
	3990010	2	Diode - 3Amp (Ground Control Box Harness)	
		Ref	Engine - TD2011	
	1001202281	12	Element, Water/Fuel Separator	
	8320270	12	Element, Fuel	
	7016331	12	Element, Oil	
	1600443	1	Module, EMR2 (ECM) (Note: Not available to order. Please Contact the JLG Parts Contact Center)	
	3740067	1	Relay	
	3740080	1	Relay	
	7026608	1	Relay, Start	
		Ref	Engine - TD2.9L4	
	70024190	12	Element, Air	
	70006405	12	Element, Water/Fuel Separator	
	70025153	12	Filter, Fuel Primary	
	70004512	12	Filter, Fuel Secondary	
	7016331	12	Filter, Oil	
	70023592	2	Fuse - 20Amp (Switched Output)	
	70023593	2	Fuse - 30Amp (Battery Output)	
	1001138228	1	Module, Power	
	1001117308	1	Relay	
	70005648	1	Relay	
	7024375	12	Element, Hydraulic Oil Filter	
	70002231	12	Element, Pressure Filter	
	70002097	12	Element, Pressure Filter	
	8229249	2	Fuse, 3A (USB Charger & Platform Control Box Harness	
	2400064	2	Fuse, 5A (ClearSky Ready Harness)	
	8229242	2	Fuse, 5A (Ground Control Box Harness)	
	2400065	2	Fuse, 30A (Ground Control Box Harness & Main Valve Harness)	

SECTION 10 - RECOMMENDED SERVICE PARTS STOCK

ITEM	PART NUMBER	QTY	DESCRIPTION	REV
	2860030	1	Key, Replacement	
	2940074	1	Latch, Platform	
	1001247468	1	Loadcell (Platform Support)	
	1001227960	1	Module, B.L.A.M.	
	1001277210	1	Module, Chassis **(Prior to SN 0300298064, Prior to SN B300017880, Excluding 0300287515, B300016940, B300017007 and B300017072)**	
	1001112758	1	Module, Chassis **(SN 0300298064 to Present, SN B300017880 to Present, Including 0300287515, B300016940, B300017007 and B300017072)**	
	1001142683	1	Module, Control Beacon	
	1001281100	1	Module, Ground Control	
	1600343	1	Module, Platform	
	3740067	1	Relay (Battery & Aux)	
	3740049	1	Relay (Ground Control Box)	
	3740080	1	Relay (110V/220V Generator Options & Main Valve Harness)	
	70006553	1	Relay (4000W Generator)	
	1001186431	1	Relay (SkyGuard Bar)	
	3740086	1	Relay (SkyLine Harness)	
	1001147479	1	Sensor, Angle Indicator (Boom Sensors & Switches)	
	4360543	1	Sensor, Boom Length (Boom Sensors & Switches)	
	4360527	1	Sensor, Cable Break Proximity (Boom Sensors & Switches)	
	1001228225	1	Sensor, Emitter (SkyEye)	
	4360548	1	Sensor, Jib Limit (Boom Sensors & Switches)	
	4360578	1	Sensor, Limit (Boom Sensors & Switches & Axle Install)	
	70000803	1	Sensor, Pressure (Steer Installation)	
	7026031	1	Sensor, Proximity (Rotary Coupling & Collector RIng)	
	1001232667	1	Sensor. Proximity (SkyLine)	
	1001311034	1	Sensor. Proximity (SkyLine)	
	1001228224	1	Sensor, Receiver (SkyEye)	
	4360505	1	Sensor, Rotary Angle Sensor (Steer)	
	1001137673	1	Sensor, SkyGuard Bar	
	1001219601	1	Sensor, Tilt Dual Axis Can (Ground Control Box)	
	1001225346	1	Switch, Battery Disconnect	
	1001117174	1	Switch, Foot	
	4360469	1	Switch, Key	
	4360274	1	Switch, Push Button Gray (Ground Control)	
	4360387	1	Switch, Push Button Yellow (Ground Control Box, Console Box & Soft Touch))	
	4360475	1	Switch, Push - Pull Emergency (Ground Control Box & Console Box)	
	4360328	1	Switch, Toggle (Ground Control Box)	
	4360336	1	Switch, Toggle (Generator & Boom Control)	
	1001155045	1	Switch, Toggle (Console Box)	
	1001159256	1	Switch, Toggle (Console Box)	
	1001161709	1	Switch, Toggle (Console Box)	
	1001161710	1	Switch, Toggle (Console Box)	
	70001432	1	Switch, Rocker (Plasma Cutter)	

SECTION 11 - SPECIAL OPTIONS

SECTION 11 - SPECIAL OPTIONS

FIGURE 11-1. SPECIAL OPTIONS/ACCESSORIES/KITS

ITEM	PART NUMBER	QTY	DESCRIPTION	REV
		Ref	Note: This list is to accommodate machines ordered with special equipment. Options may not be applicable to all models. For more specific parts information contact JLG Parts Department.	
		Ref	MISCELLANEOUS SPECIAL OPTIONS/ACCESSORIES/KITS	
	0272078	Ref	Accessory Counterweight (Required with SkyWelder and Fall Arrest Platform Options)	
	1340067	Ref	Air Cleaner Pre-Cleaner	
	0271956	Ref	Airline Installation, 1/2in (1200SJP)	
	0271933	Ref	Airline Installation, 1/2in (1350SJP)	
	1001202697	Ref	Air Intake Shut-off Valve (Deutz TCD2.9L4 Engines)	
	1001241275	Ref	Axle Wear Pad Kit	
	1001298013	Ref	Axle Hose Service Kit	
	1001298014	Ref	Axle Hose Service Kit	
	0271803	Ref	Bellows, Cylinder (Fixed Axle)	
	0271804	Ref	Bellows, Cylinder (Oscillating Axle)	
	0271805	Ref	Bellows, Cylinder (Boom)	
	0271875	Ref	Boom Wipers Installation	
	1001233763	Ref	Breather Heater (Deutz TCD2.9L4 Engines and Deutz TCD2.9L4 (Stage V Engines)	
	1001252494	Ref	China Ultra Master Kit Installations (Machines With SN Starting With B3)	
	1001220745	Ref	Booms and Cylinder Kit (1200SJP)	
	1001220747	Ref	Booms and Cylinder Kit (1350SJP)	
	1001283853	Ref	Boom Mid Rail Deck Kit	
	1001220041	Ref	China Parts Kit - (With 1 Cell LSS and Sauer Pump) (1200SJP)	
	1001220743	Ref	China Parts Kit - (With 1 Cell LSS and Sauer Pump) (1350SJP)	
	1001252492	Ref	Console and Footswitch Kit (1200SJP)	
	1001252493	Ref	Console and Footswitch Kit (1350SJP)	
	1001220039	Ref	Frame Kit (1200SJP)	
	1001252686	Ref	Frame Kit (1350SJP)	
	1001245072	Ref	Harness Kit	
	1001220044	Ref	Jib Kit (1200SJP)	
	1001220746	Ref	Jib Kit (1350SJP)	
	1001252490	Ref	Turntable Kit (1200SJP)	
	1001252491	Ref	Turntable Kit (1350SJP)	
		Ref	ClearSky (Telematics) Installations (Dealer Installed)	
	1001242192	Ref	ClearSky (Telematics) Access Control Installation Kit (Dealer Installed) (ANSI, ANSI Export and CSA Specs)	
	1001243183	Ref	ClearSky (Telematics) Added-on Kit (Dealer Installed) (ANSI, ANSI Export and CSA Specs)	
	1001246142	Ref	ClearSky (Telematics) Added-on Kit (Dealer Installed) (Australian Specs)	
	1001243184	Ref	ClearSky (Telematics) Added-on Kit (Dealer Installed) (CE & UK CA Specs)	
	1001119938	Ref	ClearSky Telematics (Dealer Installed) (ANSI Spec)	
	1001119946	Ref	ClearSky Telematics (Dealer Installed) (CSA Spec)	
	1001276923	Ref	ClearSky Telematics (Dealer Installed) (Contact JLG for Approved Countries)	
	1001265359	Ref	ClearSky Telematics Harness Kit (Dealer Installed)	
	1001293501	Ref	ClearSky Telematics CS550 Installation	
	0273862	Ref	Cold Weather Package (Deutz TD2011 Engines) (110V)	

ITEM	PART NUMBER	QTY	DESCRIPTION	REV
	1001235617	Ref	Cold Weather Package (Deutz TCD2.9L4 Engines and Deutz TCD2.9L4 (Stage V Engines)	
	1001271731	Ref	Cold Weather Package Deutz (Stage V)	
	1001282063	Ref	Cold Weather Package Deutz (Stage IV)	
	0272621	Ref	Control System Analyzer Installation	
	1001233047	Ref	Crankcase Breather Heater (Deutz TCD2’9L4 Engines)	
	1001213183	Ref	Cribbing Enable Installation	
	0257195	Ref	Government Warranty Decal	
		Ref	Decal Kits	
	1001248539	Ref	Decal Kit - Master (All Specs Except Australian, CE & UK CA Specs)	
	1001248540	Ref	Decal Kit - Master (Australian, CE & UK CA Specs)	
	1001248547	Ref	Decal Kit - Country Spec (ANSI Spec)	
	1001248546	Ref	Decal Kit - Country Spec (Australian, CE & UK CA Specs)	
	1001248551	Ref	Decal Kit - Country Spec (Brazilian Spec)	
	1001248553	Ref	Decal Kit - Country Spec (Chinese Spec)	
	1001248548	Ref	Decal Kit - Country Spec (CSA Spec)	
	1001248552	Ref	Decal Kit - Country Spec (Japanese Spec)	
	1001248549	Ref	Decal Kit - Country Spec (Korean Spec)	
	1001248550	Ref	Decal Kit - Country Spec (Latin American Spec)	
	1001270519	Ref	Decal Kit - Machine	
	1001272202	Ref	Decal Kit - Platform	
	1001272090	Ref	Decal Kit - Platform Console Box	
		Ref	Electrical Connector Kits	
	1001148902	Ref	Amp/Tyco Electrical Connector Kit	
	1001148903	Ref	Deutsch DT Electrical Connector Kit	
	1001148904	Ref	Deutsch HD Electrical Connector Kit	
	1001148905	Ref	Packard Electrical Connector Kit	
	1001148906	Ref	Various Electrical Connectors Kit	
	1001237883	Ref	Fall Arrest (Bolt-on) Add-on Kit (6ft/1.82m Platform (ANSI, ANSI Export, China, CSA & Japanese Specs Only) (Fits Platform p/ns 1001186384 & 1001228376)	
	1001237882	Ref	Fall Arrest (Bolt-on) Add-on Kit (8ft/2.4m Platform (ANSI, ANSI Export, China, CSA & Japanese Specs Only) (Fits Platform p/ns 1001186383)	
	1001206794	Ref	Fan & Belt Grille Add-on Kit (Deutz D2011 Engines Only)	
	1001206797	Ref	Fan & Belt Grille Add-on Kit (Deutz TCD2.9L4 Engines Only)	
	1001203564	Ref	Fan & Belt Grille Installation (Deutz TD2011 Engines and Deutz TCD2.9L4 (Stage V) Engines Only)	
	1001309218	Ref	Fan & Belt Grille Add-on Kit (Deutz TCD2.9L4 (R96) Engines)	
	1001202221	Ref	Fan & Belt Grille Installation (Deutz TCD2.9L4 Engines Only)	
	1001182600	Ref	Fan Guard Installation (Deutz TD2011 Engines Only) (Factory Installed)	
	1001145708	Ref	Fan Guard Installation (Deutz TCD2.9L4 Engines and Deutz TCD2.9L4 (Stage V) Engines Only)	
	1001309217	Ref	Fan Guard Installation (Deutz TCD2.9L4 (R96) Engines)	
		Ref	Filter Kits:	
	1001137027	Ref	Deutz TD2011 Engine Only	
	1001181151	Ref	Deutz TCD2.9L4 Engines Only	
	1001139099	Ref	Fire Extinguisher (20lbs) Installation	
	1001305520	Ref	Fire Extinguisher (2.5lbs) Installation	
	1001274833	Ref	Floor Mat Add-on Kit (30x48 Platform) (Dealer Installed)	
	1001274830	Ref	Floor Mat Add-on Kit (36x72 Platform) (Dealer Installed)	

SECTION 11 - SPECIAL OPTIONS

ITEM	PART NUMBER	QTY	DESCRIPTION	REV
	1001274829	Ref	Floor Mat Add-on Kit (36x96 Platform) (Dealer Installed)	
	1001191395	Ref	Fuel Cap Cover (Lockable) (Green)	
	1001202749	Ref	Fuel Cap Cover (Lockable) (Black)	
	1001103286	Ref	Generator Hourmeter Installation	
	1001277689	Ref	Generator Service Kit	
	0271769	Ref	Headlight and Taillights Installation	
	1001293369	Ref	Hood Plug Installation	
	1001142966	Ref	Hood Bracket Kit (Eliminates bending of the hood when cranking engine tray open)	
	1001233534	Ref	Hose/Cable Protection (Platform)	
	1001112741	Ref	Hose/Cable Protection (Boom) (1200SJP)	
	1001228431	Ref	Hose/Cable Protection (Boom) (1350SJP)	
	1001299820	1	Hourmeter Gauge Kit	
	1001229940	Ref	Hydraulic Tank Lock Installation (Machines With SN Starting With B3)	
	0271808	Ref	Illumination Lights Installation	
	1001204930	Ref	Hostile Environment - With Oscillating Axle (Add-on Kit)	
	1001241417	Ref	Hostile Environment - Fixed Axle (Add-on Kit)	
	1001148971	Ref	Lanyard (Bolt-on) Installation Kit	
	2915046	Ref	Load Pin Harness Kit	
	1001288636	Ref	Lockout Cylinder Kit	
	1001236951	Ref	Low Temperature Cutout Installation (Russian Specs)	
	1001120564	Ref	Oil Cooler Service Kit	
	1001117294	Ref	Panel, Foot Switch	
	1001272166	Ref	Pipe Rack Kit	
	1001172045	Ref	Platform Cable Carrier Installation	
	1001195304	Ref	Platform Console Cover Installation (Clear Polycarbonate Cover) (All Specs)	
	1001266290	Ref	Platform Console Cover Installation (Steel Cover) (ANSI, ANSI Export, China, CSA and Japanese Specs)	
	1001295280	Ref	Platform Console Cover Installation (Steel) (Machines with SN starting with B3)	
	1001308593	Ref	Platform Console Cover Installation (Fabric) (All Specs)	
	1001309057	Ref	Console Cover Kit	
	1580013	Ref	Platform Corner Storage Tray	
		Ref	Platform Entry Kits	
	1001142505	Ref	Drop Bar (Replacing Swing Gate with Drop Bar)	
	1001142504	Ref	Swing Gate (Replacing Drop Bar with Swing Gate)	
		Ref	Platform Light Installations	
	0272093	Ref	Flood Lights (1200SJP)	
	0272092	Ref	Flood Lights (1350SJP)	
	0272097	Ref	Work Lights (1200SJP)	
	0272096	Ref	Work Lights (1350SJP)	
		Ref	Platform Steel Mesh to Top Rail Add-on Kits (Dealer Installed)	
	1001281453	Ref	36in x 6ft (91.5cm x 1.83m) with Gate (ANSI and ANSI Export Specs)	
	1001281452	Ref	36in x 8ft (91.5cm x 2.44m) with Gate (ANSI and ANSI Export Specs)	
		Ref	Platform Steel Mesh to Top Rail Installations (Factory Installed)	
	1001269187	Ref	36in x 8ft (91.5cm x 2.44m) (ANSI and CSA Specs)	
	1001271642	Ref	36in x 6ft (91.5cm x 1.83m) (ANSI and CSA Specs)	
	1001272166	Ref	Platform Plastic Mesh to Top Rail Installations (Factory Installed)	

ITEM	PART NUMBER	QTY	DESCRIPTION	REV
	1001266807	Ref	30in x 4ft (76cm x 1.22m) (ANSI, ANSI Export, CSA and Australian Specs) (China Specs with SN Starting with B3)	
	1001266489	Ref	36in x 6ft (91.5cm x 1.83m) (ANSI, ANSI Export, CSA and Australian Specs) (China Specs with SN Starting with B3)	
	1001266056	Ref	36in x 8ft (91.5cm x 2.44m) (ANSI, ANSI Export, CSA and Australian Specs) (China Specs with SN Starting with B3)	
		Ref	Platform Steel Mesh to Mid Rail Add-on Kits (Dealer Installed)	
	1001281461	Ref	30in x 4ft (76.2cm x 1.22m) with Gate (ANSI, ANSI Export and Australian Specs)	
	1001281458	Ref	36in x 6ft (91.5cm x 1.83m) with Gate (ANSI, ANSI Export and Australian Specs)	
	1001281457	Ref	36in x 8ft (91.5cm x 2.44m) with Gate (ANSI, ANSI Export and Australian Specs)	
		Ref	Platform Steel Mesh to Mid Rail Installations (Factory Installed)	
	1001272274	Ref	30in x 4ft (76.2cm x 1.22m) (ANSI, ANSI Export and Australian Specs) (China Specs with SN Starting with 03)	
	1001271760	Ref	36in x 6ft (91.5cm x 1.83m) (ANSI, ANSI Export, Australian and China Specs)	
	1001269389	Ref	36in x 8ft (91.5cm x 2.44m) (ANSI, ANSI Export, Australian and China Specs)	
		Ref	Platform Plastic Mesh to Mid Rail Installations (Factory Installed)	
	1001266969	Ref	30in x 4ft (76cm x 1.22m) (ANSI, ANSI Export, CSA and Australian Specs) (China Specs with SN Starting with B3)	
	1001266284	Ref	36in x 6ft (91.5cm x 1.83m) (ANSI, ANSI Export, CSA and Australian Specs) (China Specs with SN Starting with B3)	
	1001266098	Ref	36in x 8ft (91.5cm x 2.44m) (ANSI, ANSI Export, CSA and Australian Specs) (China Specs with SN Starting with B3)	
	1001149730	Ref	Platform Mid Rail Repair Kit	
		Ref	Platform Rail Extensions	
	0272733	Ref	6ft Platform	
	0272725	Ref	8ft Platform	
	1001209059	Ref	Platform Work Surface Installation	
	1001099466	Ref	Programmable Security Lock Installation (CE & UK CA Spec Only) (1200SJP)	
	1001190891	Ref	Service Kits	W
	1001247073	Ref	SkyEye Retrofit Kit	
	1001241547	Ref	SkyEye Housing Repair Kit (LH Side)	
	1001241548	Ref	SkyEye Housing Repair Kit (RH Side)	
	1001249052	Ref	SkyGuard Retrofit Kit	
	1001250595	Ref	SkyGuard 6 Pin Retrofit Kit	
		Ref	SkyGuard Component Options:	
	1001210043	Ref	SkyGuard Complete Add-on Kit (Red Beacon)	
	1001209481	Ref	SkyGuard Complete Add-on Kit (Blue Beacon)	
	1001210042	Ref	SkyGuard Complete Add-on Kit (Red Beacon)	
	1001137672	Ref	SkyGuard Platform Sensor Kit	
	1001137440	Ref	Harness - Platform Sensor	
	1001186431	Ref	Relay	
	1001206544	Ref	SkyGuard Strobe Light Kit (Blue Beacon)	
	1001210028	Ref	SkyGuard Strobe Light Kit (Red Beacon)	
	1001262016	Ref	SkyLine Kit Add-on Kit (Dealer Installed)	
	1001250465	Ref	SkySense (EDS) Level 1 (2 Bar) Installation (Factory Installed)	
	1001250466	Ref	SkySense (EDS) Level 2 (3 Bar) Installation (Factory Installed)	
	1001289905	Ref	SkySense (EDS) Level 1 Kit (2 Bar) (Dealer Installed)	
	1001289906	Ref	SkySense (EDS) Level 2 Kit (3 Bar) (Dealer Installed)	

SECTION 11 - SPECIAL OPTIONS

ITEM	PART NUMBER	QTY	DESCRIPTION	REV
	1001253618	Ref	SkySense Module Service Kit (Level 1)	
	1001253619	Ref	SkySense Module Service Kit (Level 2)	
	1001282461	Ref	SkySense Padding Installation - For 36 x 48 Platforms equiped with SkySense	
	1001282434	Ref	SkySense Pre-cut Bumper Kit (use with 1001282461)	
	1001275642	Ref	SkySense Padding Installation - For 36 x 72 Platforms equiped with SkySense	
	1001275650	Ref	SkySense Pre-cut Bumper Kit (use with 1001275642)	
	1001269655	Ref	SkySense Padding Installation - For 36 x 96 Platforms equiped with SkySense	
	1001276062	Ref	SkySense Pre-cut Bumper Kit (use with 1001269655)	
	1001231235	Ref	SkyWelder Locking Bracket	
	1001303167	1	SkyWelder Extension Cord Cable	
	1001281070	Ref	Strobe Beacon Replacement Kit	
	1001294070	1	Strobe Light (Blue) Kit	
	1001293874	1	Strobe Light (Red) Kit	
	1001292586	1	Strobe Light (Amber) Kit	
	1001284518	Ref	Telematics Gateway (Dealer Installed)	
	1001228926	Ref	Turntable Bearing Cover Installation	
		Ref	Tools For Service:	
	2901443	Ref	Analyzer Kit	
	1001249695	Ref	Analyzer and Cable Kit	
	1001249941	Ref	Analyzer and Cable Kit (Battery Powered)	
	1001137005	Ref	Cable Service Kit	
	0272048	Ref	Boom Cable Tools Installation	
	4120040	Ref	Socket 3/4in	
	4120043	Ref	Socket 2in	
	1705307	Ref	Decal - Tool Location	
	7002821	Ref	Crimper, Wire	
	70004646	Ref	Puller	
	70004647	Ref	Seal, Tool	
	70004648	Ref	Puller (Brake Assembly)	
	70004185	Ref	Torque Multiplier	
	7002823	Ref	Pin Extractor - Universal (For Electrical Connectors with Pins and Sockets)	
	4460467	Ref	Extractor - 16-18 Gauge (For Removal of Pin/Sockets from Deutsch Connectors)	
	4460510	Ref	Extractor - 12-14 Gauge (For Removal of Pin/Sockets from Deutsch Connectors)	
	7016654	Ref	Screwdriver, Magnetic	
	7002822	Ref	Screwdriver, Potentiometer	
	7004275	Ref	Seal Tool 1in (For Cylinders)	
	7004276	Ref	Seal Tool 1-1/2in (For Cylinders)	
	7002828	Ref	Stripper, Wire	
	4921850	Ref	Throttle Service Harness	
	70004185	Ref	Torque Multiplier	
	7016655	Ref	Wire Rope Sheave Gauge	
	1001277849	Ref	UGM2 Retrofit Kit	
	1001277844	Ref	UGM2 Retrofit Kit	
	1001274249	Ref	USB Charger Add-on Kit (Dealer Installed)	
	1001262959	Ref	Voltage Regulator Relocation Kit (ClearSky)	
	2910890	Ref	Wear Pad Kit (Includes Wear Pads, Shims and Hardware)	
		Ref	Weld Leads at Platform Installation	

ITEM	PART NUMBER	QTY	DESCRIPTION	REV
	0271983	Ref	Weld Leads at Platform Installation (1200SJP)	
	0271820	Ref	Weld Leads at Platform Installation (1350SJP)	
	2910894	Ref	Wire Rope Kit - (Includes Cables, Sheaves, Sheave Pins and Hardware) (1200SJP)	
	2910895	Ref	Wire Rope Kit - (Includes Cables, Sheaves, Sheave Pins and Hardware) (1350SJP)	
	1001277222	Ref	White Noise Alarm Kit	
	1001277191	Ref	White Noise Ambient Alarm Kit	

PART NUMBER INDEX

SECTION 11 - SPECIAL OPTIONS

0080237.....259, 271
0080244....263, 267, 275, 279
0080277.....29
0100009.....699
0100011....21, 25, 29, 36, 43, 55, 61, 63, 67, 69, 71, 85, 87, 93, 97, 101, 103, 105, 107, 109, 111, 133, 135, 137, 139, 141, 143, 145, 147, 149, 150, 153, 154, 157, 158, 161, 165, 169, 194, 195, 198, 199, 204, 205, 208, 212, 213, 215, 219, 223, 227, 231, 235, 239, 243, 247, 251, 255, 259, 263, 267, 271, 275, 279, 287, 291, 294, 303, 307, 311, 315, 319, 323, 327, 331, 335, 337, 339, 341, 343, 345, 349, 354, 363, 367, 371, 375, 379, 383, 387, 391, 395, 399, 403, 405, 407, 409, 411, 413, 416, 422, 431, 435, 439, 441, 445, 449, 452, 457, 461, 463, 467, 470, 475, 479, 483, 487, 489, 491, 494, 501, 505, 509, 511, 514, 553, 555, 565, 569, 573, 577, 581, 585, 589, 593, 597, 601, 605, 607, 609, 611, 615, 623, 631, 639, 652, 656, 659, 663, 665, 675, 677, 679, 681, 689, 691, 693, 695, 749, 751, 753, 755, 757, 760, 763, 765, 767
0100019....21, 25, 29, 31, 41, 79, 81, 581, 585, 589, 593, 597, 601, 605, 607, 609, 611, 615, 623, 631, 639, 652, 656
0100020....294, 349, 354, 416, 422, 452, 470, 494, 514, 573, 581, 590, 597, 713, 721, 760, 831, 833, 835, 837, 839, 841, 843, 845, 847, 849, 855
0100035.....29, 296, 452, 470, 659, 699, 715, 717
0100048.....95, 149, 153, 157, 161, 165, 179, 181, 573, 581, 585, 590, 594, 597, 601, 659, 961, 1001, 1003, 1007
0100062... 294, 350, 356, 416, 422, 452, 470, 494, 514
0100079... 219, 223, 227, 231, 235, 239, 243, 247, 251, 255, 287, 303, 307, 311, 315, 319, 323, 327, 331, 363, 367, 371, 375, 379, 383, 387, 391, 395, 399, 431, 435, 441, 445, 457, 463, 475, 479, 483, 501, 505, 551
0100081... 194, 195, 199, 653, 657, 660, 725, 727, 729, 731, 733, 735, 737, 739, 741, 743, 745, 747
0140001..... 69, 71
0140011..... 699
0140032..... 177
0200048.... 763, 765, 767
0200742..... 565, 569
0200833..... 29
0236768..... 69, 71
0239842..... 83
0257195..... 1037
0257887..... 177
0259666..... 171
0271512..... 81
0271520..... 29
0271530..... 609
0271570..... 656
0271572..... 101
0271595..... 194
0271688..... 93
0271769..... 1038
0271795..... 69
0271799..... 605
0271800..... 652
0271803..... 1036
0271804..... 1036
0271805..... 1036
0271806..... 177
0271808..... 1038
0271820..... 1041
0271852..... 47
0271874..... 85
0271875..... 1036
0271932..... 875
0271933..... 1036
0271950..... 879
0271951..... 877
0271952..... 881
0271953..... 827
0271954..... 829
0271955..... 825
0271956..... 1036
0271983..... 1041
0272048..... 645, 1040
0272055..... 47
0272056..... 47
0272060... 260, 263, 267, 272, 275, 279
0272064..... 189
0272078..... 1036
0272080..... 117
0272092..... 1038
0272093..... 1038
0272096..... 1038
0272097..... 1038
0272254..... 755
0272418... 725, 727, 729, 731, 733, 735, 737, 739, 741, 743, 745, 747
0272427..... 765
0272435..... 590, 598
0272448..... 1029
0272521..... 753
0272522..... 1019
0272523..... 1019
0272588..... 1027
0272589..... 594, 602
0272599..... 1023
0272607..... 1025
0272621..... 1037
0272725..... 1039
0272733..... 1039
0272948..... 739
0272949..... 733
0272950..... 735
0272951..... 727
0272952..... 737
0273353..... 760
0273404..... 747
0273405..... 743
0273406..... 741
0273696..... 659
0273706..... 767
0273824..... 763
0273854..... 891
0273855..... 893
0273862..... 1036
0274730..... 1019
0275098..... 703
0275216..... 833, 975
0275217..... 837, 977
0275452..... 841, 979
0275453..... 845, 981
0275454..... 849, 983
0340003... 259, 263, 267, 271, 275, 279
0340051... 259, 263, 267, 271, 275, 279
0363037..... 21, 25
0363062..... 69, 71
0363066... 617, 625, 633, 641
0363076..... 21
0363081..... 565, 569
0363082..... 565, 569
0400020..... 69, 71
0440251..... 81
0480122..... 569
0480127..... 565
0480128..... 573, 589
0480129..... 593
0561431... 615, 623, 631, 639
0561437... 615, 623, 631, 639
0561439... 615, 623, 631, 639
0561444.... 615, 623, 631, 639
0561454.... 615, 623, 631, 639
0561457.... 615, 623, 631, 639
0561458.... 615, 623, 631, 639
0561471.... 615, 623, 631, 639
0561482.... 615, 623, 631, 639
0561500.... 615, 623, 631, 639
0630407.... 150, 154, 158, 169
0630462..... 763, 765, 767
0630464..... 29, 149, 153, 157, 161, 165, 659
0630467..... 652, 656
0630511..... 87
0630518..... 173, 715
0630535..... 783
0630548.... 149, 153, 157, 161, 165
0630558.... 617, 626, 633, 642
0630568..... 700
0641404..... 87, 573, 577, 581, 585, 589, 593, 597, 601, 751
0641405..... 659, 699, 751
0641406..... 63, 149, 153, 157, 161, 165, 181, 198, 212, 259, 263, 267, 271, 275, 279, 291, 294, 348, 354, 416, 422, 431, 435, 441, 445, 452, 457, 463, 470, 494, 514, 565, 569, 652, 656, 697, 769, 1001, 1003, 1005, 1007, 1009, 1011, 1013, 1015, 1017
0641407..... 67, 179, 291, 431, 435, 441, 445, 457, 463, 494, 514, 577, 585, 857
0641408 69, 71, 185, 187, 194, 198, 205, 213, 215, 291, 303, 307, 311, 315, 319, 323, 327, 331, 363, 367, 371, 375, 379, 383, 387, 391, 395, 399, 431, 435, 441, 445, 457, 463, 475, 479, 483, 501, 505, 697
0641410.... 219, 223, 227, 231, 235, 239, 243, 247, 251, 255, 287, 303, 307, 311, 315, 319, 323, 327, 331, 363, 367, 371, 375, 379, 383, 387, 391, 395, 399, 431, 435,

441, 445, 457, 463, 475, 479, 483, 501, 505
0641412 .... 61, 63, 69, 71
0641414 ..... 63, 699, 749, 763, 765, 767
0641416 ... 825, 827, 829, 831, 833, 835, 837, 839, 841, 843, 845, 847, 849, 855, 857
0641418 ... 675, 677, 679, 681, 689, 691, 693, 695
0641424 55
0641503 ... 294, 350, 356, 416, 422, 452, 470, 494, 514
0641504 55
0641505 29
0641506 67, 87, 177, 194, 195, 199, 204, 208, 212, 219, 223, 227, 231, 235, 239, 243, 247, 251, 255, 259, 263, 267, 271, 275, 279
0641507 ... 259, 263, 267, 271, 275, 279, 665
0641508 ... 123, 127, 348, 354, 416, 422, 494, 514, 565, 569
0641509 ..... 55, 191, 219, 223, 227, 231, 235, 239, 243, 247, 251, 255
0641510 ... 199, 350, 356, 416, 422, 496, 516, 653, 657
0641511 ..... 29, 219, 223, 227, 231, 235, 239, 243, 247, 251, 255, 287, 303, 307, 311, 315, 319, 323, 327, 331, 363, 367, 371, 375, 379, 383, 387, 391, 395, 399, 431, 435, 441, 445, 457, 463, 475, 479, 483, 501, 505
0641516 ... 573, 581, 589, 593, 597, 601
0641520 ... 117, 119, 121, 125, 129, 131
0641524 ..... 123, 127
0641605 ... 219, 223, 227, 231, 235, 239, 243, 247, 251, 255, 259, 263, 267, 271, 275, 279, 287, 303, 307, 311, 315, 319, 323, 327, 331, 363, 367, 371, 375, 379, 383, 387, 391, 395, 399, 431, 435, 441, 445, 457, 463, 475, 479, 483, 501, 505
0641606 ... 21, 25, 69, 71, 87, 204, 208, 212, 220, 224, 228, 232, 236, 240, 243, 248, 252, 256, 287, 294, 303, 307, 311, 315, 319, 323, 327, 331, 348, 354, 363, 367, 371, 375, 379, 383, 387, 391, 395, 399, 416, 422, 431, 435, 441, 445, 452, 457, 463, 470, 475, 479, 483, 494, 501, 505, 514, 753, 755, 757, 760
0641607 ... 615, 623, 631, 639
0641608 ... 21, 25, 55, 67, 85, 87, 101, 103, 105, 107, 109, 111, 117, 119, 131, 189, 191, 194, 198, 204, 208, 212, 259, 263, 267, 271, 275, 279, 287, 291, 294, 303, 307, 311, 315, 319, 323, 327, 331, 339, 341, 343, 345, 348, 354, 363, 367, 371, 375, 379, 383, 387, 391, 395, 399, 403, 405, 411, 413, 416, 422, 431, 435, 441, 445, 449, 452, 457, 463, 467, 470, 475, 479, 483, 487, 491, 494, 501, 505, 509, 511, 514, 557, 565, 569, 605, 607, 609, 611, 652, 656
0641609 21, 25, 123, 127, 259, 263, 267, 271, 275, 279
0641610 ... 194, 198, 204, 208, 212, 219, 223, 227, 231, 235, 239, 243, 247, 251, 255, 259, 263, 267, 271, 275, 279, 287, 294, 303, 307, 311, 315, 319, 323, 327, 331, 348, 354, 363, 367, 371, 375, 379, 383, 387, 391, 395, 399, 416, 422, 431, 435, 441, 445, 452, 457, 463, 470, 475, 479, 483, 494, 501, 505, 514, 551, 555, 565, 569, 615, 623, 631, 639, 697
0641611 21, 25, 516, 553, 607, 611
0641612 ... 287, 303, 307, 311, 315, 319, 323, 327, 331, 350, 356, 363, 367, 371, 375, 379, 383, 387, 391, 395, 399, 416, 422, 431, 435, 441, 445, 457, 463, 475, 479, 483, 496, 501, 505, 516, 551, 605, 609
0641613 .....21, 25
0641614 ....101, 103, 105, 107, 109, 111
0641615 ....615, 623, 631, 639
0641616 .....573, 577
0641618 ....581, 585, 590, 594, 597, 601, 617, 625, 633, 641
0641630 ....194, 198, 204, 208, 212
0641634 29
0641640 ....617, 625, 633, 641
0641644 ....617, 625, 633, 641
0641646 ....615, 623, 631, 639
0641652 ....615, 623, 631, 639
0641676 645
0641706 ....294, 348, 354, 416, 422, 452, 470, 494, 514
0641708 ....287, 294, 304, 308, 312, 316, 320, 324, 327, 331, 348, 354, 363, 367, 371, 375, 379, 383, 387, 391, 395, 399, 416, 422, 431, 435, 441, 445, 452, 457, 463, 470, 475, 479, 483, 494, 501, 505, 514
0641718 .....565, 569
0641808 ..21, 25, 55, 219, 223, 227, 231, 235, 239, 243, 247, 251, 255, 259, 263, 267, 271, 275, 279, 287, 303, 307, 311, 315, 319, 323, 327, 331, 363, 367, 371, 375, 379, 383, 387, 391, 395, 399, 431, 435, 441, 445, 457, 463, 475, 479, 483, 501, 505, 615, 623, 631, 639
0641810 49, 53, 573, 577, 581, 585, 589, 593, 597, 601, 652, 656
0641812 93, 97, 259, 263, 267, 291, 335, 337, 339, 341, 343, 345, 403, 405, 411, 413, 439, 449, 461, 467, 491, 511
0641813 ....204, 208, 212, 615, 623, 631, 639
0641814 .....22, 271, 275, 279, 335, 337, 339, 341, 407, 409, 487, 489, 509
0641816 191
0641818 ... 189, 259, 263, 267, 271, 275, 279
0641820 ..... 93, 97
0641826 ... 259, 263, 267, 271, 275, 279
0642010 ... 219, 223, 227, 231, 235, 239, 243, 247, 251, 255, 287, 303, 307, 311, 315, 319, 323, 327, 331, 363, 367, 371, 375, 379, 383, 387, 391, 395, 399, 431, 435, 441, 445, 457, 463, 475, 479, 483, 501, 505
0642012 ... 615, 623, 631, 639, 725, 727, 729, 731, 733, 735, 737, 739, 741, 743, 745, 747
0642014 ... 615, 623, 631, 639
0642016 29
0642020 25
0642022 ... 615, 623, 631, 639
0642212 ... 725, 727, 729, 731, 733, 735, 737, 739, 741, 743, 745, 747
0642214 21, 25, 605, 607, 609, 611
0681608 ... 618, 626, 634, 642, 663
0681620 ... 705, 707, 709, 711
0681813 ..... 21, 25
0681814 21, 25, 683, 685, 687
0681815 ..... 21, 25
0681816 ..... 21, 25
0681822 .... 683, 685, 687
0682026 81
0682028 ... 294, 348, 354, 416, 422, 452, 470, 494, 514, 615, 623, 631, 639
0682040 81
0682212 ... 615, 623, 631, 639
0682422 79
0682424 ... 705, 707, 709, 711
0700408 ... 831, 833, 835, 837, 839, 841, 843, 845, 847, 849, 855
0700615 ..... 185, 187
0700616 .... 205, 213, 215
0700812 ... 350, 356, 416, 422
0700815 ... 294, 348, 354, 416, 422, 452, 470, 494, 514
0701022 .... 297, 452, 470
0701024 294
0701025 .... 294, 452, 470
0701418 ..... 565, 569
0701617 ..... 31, 41
0701619 .... 47, 49, 51, 53

SECTION 11 - SPECIAL OPTIONS

0711214....259, 263, 267, 271, 275, 279
0711417....263, 267, 275, 279
0720804.....699
0721005.....765, 767
0721006.....553, 555, 699
0731005.....763
0731007....101, 103, 105, 107, 109, 111
0741606.....29, 615, 623, 631, 639
0741607....573, 577, 581, 585, 597, 601
0741806....615, 623, 631, 639
0760608.....194, 195, 199
0760612....149, 153, 157, 161, 165
0760808.....494, 514
0760810....294, 350, 356, 416, 422, 452, 470, 663
0760812.....863
0760814.....295, 452, 470
0760814001.....295
0761014.....663
0761016.....294, 452, 470
0761210....287, 296, 303, 307, 311, 315, 319, 323, 327, 331, 363, 367, 371, 375, 379, 383, 387, 391, 395, 399, 431, 435, 441, 445, 452, 457, 463, 470, 475, 479, 483, 501, 505
0761212.....494, 514
0761214 36, 43, 294, 350, 356, 416, 422, 452, 470, 494, 514, 559
0761215....272, 275, 280, 291, 339, 341, 343, 345, 403, 405, 411, 413, 449, 467, 487, 491, 509, 511
0761216.....663
0771212....294, 348, 354, 416, 422, 452, 470, 494, 514
0771414....259, 263, 267, 271, 275, 279, 294, 348, 354, 416, 422, 452, 470, 494, 514
0791410.....61, 63
0791504.....652, 656, 659
0791518.....652, 656
0791604..61, 63, 87, 194, 198, 204, 208, 212, 615, 623, 631, 639, 659
0791605....617, 625, 633, 641, 659
0791606....615, 623, 631, 639, 659
0791607.....61, 653, 657
0791608.....659
0791612....615, 623, 631, 639
0791618... 615, 623, 631, 639
0791620... 615, 623, 631, 639, 652, 656
0791622..... 652, 656
0791624... 615, 623, 631, 639, 652, 656
0791808..... 653, 657
0801301..... 631, 639
0801302..... 631, 639
0801303..... 631, 639
0801304..... 631, 639
0801315..... 609, 631
0801316..... 615, 623
0801317..... 615, 623
0801318..... 615, 623
0801319..... 615, 623
0801320..... 605, 615
0801550... 617, 625, 633, 641
0811606... 618, 626, 634, 642
0811607... 618, 626, 634, 642
0811608... 615, 623, 631, 639
0811610... 615, 623, 631, 639
0811614... 615, 623, 631, 639
0811616... 615, 623, 631, 639
0860038... 573, 581, 589, 597, 827, 829
0861538..... 589, 597
0861572..... 593, 601
0861731... 831, 843, 847, 855, 979, 981, 983
0861781... 835, 839, 975, 977
0861880..... 895, 897
0902746.... 194, 195, 199
0902755..... 67
0902761..... 194, 199
0902762..... 195, 199
0902763..... 195, 199
0902800..... 67
0902813..... 565, 569
0902888... 573, 581, 589, 593, 597, 601
0902915..... 93, 97
0903154..... 194, 198
0903156..... 194, 198
0903161..... 195, 199
0903162..... 195, 199
0940070... 259, 263, 267, 271, 275, 279, 294, 348, 354, 416, 422, 452, 470, 494, 514
0940092.... 763, 765, 767
0940094.... 763, 765, 767
0940102... 725, 727, 729, 731, 733, 735, 737, 739, 741, 743, 745, 747
0940103..... 765
0940133..... 767
0940134..... 763
0961845... 675, 677, 679, 681, 689, 691, 693, 695
0961894..... 783
0961949.... 781, 783, 789
0961950..... 779, 789
0961951... 615, 623, 631, 639
0961986... 259, 263, 267, 271, 275, 279, 294, 348, 354, 416, 422, 452, 470, 494, 514
0962033..... 21, 25
0962051..... 189, 191
0962224... 615, 623, 631, 639
0962257..... 787
0962270.... 683, 685, 687
0962297... 615, 623, 631, 639, 785
0962402... 616, 624, 632, 640
0962403... 616, 624, 632, 640
0962404... 617, 625, 633, 641
0962406... 616, 624, 632, 640
0962409... 616, 624, 632, 640
0962410... 616, 624, 632, 640
0962411... 617, 625, 633, 641
0962423..... 29
0962447... 617, 625, 633, 641
0962449..... 570
0962520... 573, 577, 581, 585, 589, 593, 597, 601
1001091102..... 577, 585, 857
1001091969..... 833
1001091970..... 837
1001091973..... 841
1001091974..... 845
1001091975..... 849
1001094105..... 947
1001094915..... 577, 585, 857
1001095976..... 857
1001097051..... 989
1001097150..... 895
1001097244..... 771
1001097820..... 797, 799
1001098012..... 719, 721, 760
1001098025..... 797
1001098026..... 799
1001098122..... 713, 967
1001098149..... 721
1001098512..... 219
1001098513..... 220, 228, 259
1001098516..... 223
1001098530..... 224, 232, 263
1001098531..... 236, 267
1001098601.....259, 264, 268, 271, 276, 280, 283
1001098828.....663
1001099366.....725, 727, 729, 731, 733, 735, 737, 739, 741, 743, 745, 747
1001099367.....725, 727, 729, 731, 733, 735, 737, 739, 741, 743, 745, 747
1001099421.....739
1001099422.....727
1001099466.....1039
1001099632.....29
1001099869.....569
1001100231.....895
1001100233.....569
1001100321.....569
1001100341.....975
1001100342.....977
1001100345.....979
1001100346.....983
1001100347.....981
1001101191.....831, 833, 835, 837, 839, 841, 843, 845, 847, 849, 855, 895, 897
1001101196.....833, 835, 837, 839
1001101197.....831, 841, 843, 845, 847, 849, 855
1001101421.....725
1001101422.....725
1001101550.....35, 43
1001103012.....923
1001103286.....1038
1001104315.....31, 33
1001104324.....31
1001104325.....33, 35
1001104498.....923
1001106736.....925
1001107359.....103, 109
1001107854.....923
1001107971.....239, 248, 271
1001107973.....244, 256, 275
1001107975.....252, 279
1001108579.....105, 111
1001108616.....272, 276, 281, 291, 339, 341, 411, 413, 449, 467, 487, 509, 536
1001108617.....219, 223, 227, 231, 235, 240, 244, 247, 251, 255, 287, 303, 307, 311, 315, 319, 323, 327, 331, 363, 367, 371, 375, 379, 383, 387, 391, 395, 399, 431, 435, 441, 445, 457, 463, 475, 479, 483, 501, 505
1001109048.....105, 111
1001109468.....818

1001109484 923
1001109485 925
1001109654 ..... 857, 895
1001109677 ..... 119, 125, 127, 129, 131
1001110027 204
1001110059 ..... 105, 111
1001110064 ..... 150, 154, 158, 169
1001110108 63
1001110109 63
1001110110 63
1001110111 63
1001110112 63
1001110113 63
1001110425 ..... 287, 303, 307, 311, 315, 319, 323, 327, 331, 363, 367, 371, 375, 379, 383, 387, 391, 395, 399, 431, 435, 441, 445, 457, 463, 475, 479, 483, 501, 505
1001110433 ..... 204, 208, 212
1001110486 ..... 204, 208, 212
1001110513 63
1001110604 818
1001110740 71
1001110872 ..... 851, 853
1001110873 ..... 573, 581, 590, 598, 827
1001110877 63
1001110940 87
1001111132 ..... 228, 232, 236, 248, 252, 256
1001111175 87
1001111176 87
1001111193 87
1001111219 87
1001112551 1003
1001112612 ..... 865, 925
1001112669 51
1001112691 ..... 204, 208, 212
1001112716 51
1001112741 1038
1001112758 1033
1001112766 ..... 259, 263, 267, 271, 275, 279
1001112796 ..... 865, 913, 917
1001112878 ..... 227, 231, 235, 247, 251, 255
1001112879 ..... 227, 231, 235, 247, 251, 255
1001112880 ..... 227, 231, 235, 247, 251, 255
1001112911 87
1001112927 ..... 272, 276, 280, 291, 339, 341, 343, 345, 403, 405, 411, 413, 449, 467, 487, 491, 509, 511, 543
1001113006 129
1001113047 ..... 204, 208, 212
1001113103 ..... 105, 111
1001113173 87
1001113698 ..... 157, 161
1001113961 923
1001114392 87
1001114620 810
1001115168 87
1001115440 87
1001115603 745
1001115961 51
1001116015 235
1001116025 1019
1001116208 1020
1001116290 ..... 205, 213, 215
1001116692 917
1001116693 919
1001116694 ..... 917, 919
1001116707 931
1001116710 941
1001116720 969
1001116728 932
1001116731 913
1001116733 961
1001116734 961
1001116774 ..... 865, 917, 919
1001116792 ..... 287, 303, 307, 311, 315, 319, 323, 327, 331, 363, 367, 371, 375, 379, 383, 387, 391, 395, 399
1001116808 ..... 865, 917
1001116812 ..... 917, 923, 935, 947
1001116815 ..... 917, 925, 936
1001116846 1009
1001116849 1009
1001116851 1009
1001116952 ..... 932, 935
1001116967 931
1001116983 941
1001117035 1009
1001117078 ..... 591, 594, 599, 602
1001117106 932
1001117107 ..... 932, 935
1001117140 199
1001117172 713
1001117174 ..... 699, 713, 1033
1001117294 1038
1001117308 ..... 295, 349, 355, 417, 423, 453, 471, 495, 515, 1032
1001117370 227
1001117371 231
1001118384 991
1001118388 ..... 969, 991
1001118712 239
1001118713 243
1001118859 818
1001118869 818
1001118933 818
1001118934 ..... 818, 822
1001118935 818
1001118957 119
1001119020 ..... 865, 923, 925, 947, 963, 967
1001119052 247
1001119053 255
1001119054 251
1001119138 818
1001119372 ..... 149, 153, 157, 161, 165, 949
1001119456 ..... 133, 139, 973
1001119470 ..... 133, 135, 139, 141, 929
1001119619 985
1001119620 ..... 987, 989
1001119727 ..... 295, 453, 471
1001119817 818
1001119899 ..... 616, 624, 632, 640
1001119938 1036
1001119946 1036
1001119968 ..... 590, 594, 599, 602
1001120328 ..... 749, 751, 967
1001120378 569
1001120382 569
1001120471 771
1001120477 771
1001120484 771
1001120564 ..... 117, 119, 1038
1001120989 1020
1001120994 1020
1001121615 963
1001121616 963
1001122528 ..... 590, 594, 599, 602
1001122611 ..... 1001, 1005, 1009, 1013, 1015, 1017
1001125387 1020
1001125425 565
1001125426 569
1001125427 589
1001125428 593
1001126009 991
1001126011 ..... 963, 967
1001126351 ..... 931, 935
1001126352 931
1001126356 931
1001126357 931
1001126362 ..... 932, 935
1001126363 ..... 932, 935, 936
1001126364 ..... 932, 935, 936
1001126365 933
1001126384 931
1001126391 ..... 933, 935
1001126392 ..... 933, 935
1001126485 935
1001126487 935
1001128527 757
1001128556 757
1001129334 ..... 150, 154, 158, 162, 165
1001129408 ..... 901, 903, 905, 907
1001129858 ..... 573, 574
1001131269 ..... 1001, 1011
1001131462 ..... 204, 208, 212
1001131482 191
1001131542 ..... 259, 263, 267, 271, 275, 279, 287, 304, 308, 312, 316, 320, 324, 327, 331, 363, 367, 371, 375, 379, 383, 387, 391, 395, 399, 431, 435, 441, 445, 457, 463, 475, 479, 483, 501, 505
1001131620 ..... 652, 656
1001131728 656
1001131729 652
1001131733 656
1001131734 652
1001131969 ..... 883, 889
1001133633 ..... 296, 349, 355, 417, 423, 453, 471, 495, 515
1001133634 ..... 295, 349, 355, 417, 423, 453, 471, 495, 515
1001133714 ..... 933, 936, 939
1001133715 ..... 933, 936, 939
1001133956 ..... 931, 935
1001133957 ..... 931, 935
1001134389 319
1001134390 ..... 315, 319, 339
1001134392 ..... 335, 339, 343, 348
1001134488 ..... 295, 348, 356, 417, 423, 453, 471, 495, 515
1001135138 ..... 295, 349, 355, 417, 423, 495
1001135560 ..... 295, 349, 355, 417, 423, 453, 471, 495, 515
1001135562 ..... 295, 349, 355, 417, 423, 453, 471, 495, 515
1001135650 ..... 933, 936, 939
1001135651 ..... 933, 936
1001135663 191
1001135679 ..... 295, 349, 355, 417, 423, 453, 471
1001135680 ..... 349, 355, 417, 423, 495, 515
1001135779 ..... 296, 350, 355, 417, 423, 453, 471, 495, 515
1001135901 ..... 349, 355, 417, 423, 495, 515

SECTION 11 - SPECIAL OPTIONS

1001135903.....295, 453, 471, 495, 515
1001135913.....349, 355, 417, 423, 495, 515
1001135924.....349, 355, 417, 423, 495, 515
1001135926.....349, 355, 417, 423, 495, 515
1001135943.....349, 355, 417, 423, 495, 515
1001135946.....295, 453, 471, 495, 515
1001136356.....577
1001136357.....585, 602
1001136626.....349, 355, 417, 423, 495, 515
1001136665.....295, 349, 355, 417, 423, 453, 471, 495, 515
1001136834.....295, 349, 355, 417, 423, 453, 471, 495, 515
1001137005.....1040
1001137027.....1037
1001137276.....295, 349, 355, 417, 423, 453, 471, 495, 515
1001137336.....294, 453, 471
1001137440.....1039
1001137590.....597
1001137591.....601
1001137672.....1039
1001137673.....749, 1033
1001138011.....581, 585, 598, 602
1001138110.....933
1001138111.....933
1001138113.....933
1001138228.....295, 349, 355, 417, 423, 453, 471, 495, 515, 1032
1001138248.....296, 349, 355, 417, 423, 453, 471, 495, 515
1001138253.....295, 349, 355, 417, 423, 453, 471, 495, 515
1001138346.....295, 349, 355, 931
1001138491.....287, 303, 307, 311, 315, 319, 323, 327, 331, 363, 367, 371, 375, 379, 383, 387, 391, 395, 399, 431, 435, 441, 445, 457, 463, 475, 479, 483, 501, 505, 941
1001138494.....677, 679, 681, 689, 691, 693, 695
1001138514.....677, 679, 681, 691, 695
1001138524.....296, 349, 355, 417, 423, 453, 471, 495, 515
1001138559..... 297, 349, 355, 418, 424, 454, 472, 495, 515
1001138565..... 577
1001138566..... 573, 577, 581, 585
1001138717..... 350, 356, 418, 424
1001138800..... 607
1001138801..... 607, 623
1001138827..... 295, 349, 355, 418, 424, 454, 472, 495, 515
1001139099..... 1037
1001139240..... 295, 349, 355, 418, 424, 454, 472, 495, 515
1001139357..... 573, 577
1001139492..... 125
1001139494..... 121
1001139516..... 611
1001139517..... 611, 639
1001139654..... 1020
1001139665..... 121, 125, 129
1001139666..... 121, 125, 129
1001139778..... 212
1001139958..... 573
1001139959..... 577
1001139972..... 616, 624, 632, 640
1001140222..... 553
1001140312..... 356, 418, 472
1001140344..... 581
1001140346..... 582
1001140347..... 585
1001140429..... 675, 677, 679, 681, 689, 691, 693, 695
1001140485..... 198, 212
1001140564..... 295, 348, 355, 418, 424, 454, 472, 495, 515
1001140604..... 307, 311, 319, 323, 331, 363, 367, 375, 379, 387, 391, 395
1001141225..... 287, 303, 307, 311, 315, 319, 323, 327, 331, 363, 367, 371, 375, 379, 383, 387, 391, 395, 399, 431, 435, 441, 445, 457, 463, 475, 479, 483, 501, 505
1001141300..... 1020
1001141302..... 1020
1001141304..... 295, 350, 355, 418, 424, 454, 472, 496, 515
1001141717..... 295, 350, 355, 418, 424, 454, 472, 496, 515
1001141718..... 553, 555
1001141719..... 295, 348, 355, 418, 424, 454, 472, 496, 516
1001141744..... 323
1001141745..... 323, 341
1001141746..... 337, 341, 345, 354
1001141811..... 307
1001141812..... 303, 307, 335
1001141813..... 311, 337
1001141815..... 311
1001141817..... 315
1001141819..... 303
1001142144..... 198
1001142501..... 295, 350, 356, 418, 424, 454, 472, 496, 516
1001142504..... 1038
1001142505..... 1038
1001142637..... 496, 516
1001142645..... 581, 598
1001142683..... 185, 187, 1033
1001142685..... 295, 350, 356, 418, 424, 454, 472, 496, 516
1001142719..... 185, 187
1001142736..... 185, 187, 865
1001142938..... 933, 936
1001142940..... 933, 936
1001142941..... 933, 936
1001142966..... 1038
1001143087..... 121, 123, 125, 127, 129
1001143123..... 121, 125
1001143294..... 191
1001143298..... 191
1001143390..... 295, 350, 356, 418, 424, 454, 472, 496, 516
1001143852..... 1020
1001144089..... 295, 350, 356, 418, 424, 454, 472, 496, 516
1001144147..... 913, 925
1001144433..... 749
1001144629..... 671, 673, 689, 693
1001145089..... 303, 307, 311, 315, 319, 323, 328, 332, 364, 368, 372, 376, 380, 384, 388, 392, 396, 400, 475, 479, 484, 501, 506
1001145154..... 296, 350, 356, 418, 424, 454, 472, 496, 516
1001145162..... 212
1001145382..... 260, 264, 268, 272, 276, 280
1001145405..... 721, 760
1001145560..... 303, 315, 328, 372, 384, 400, 476, 480, 484, 502, 506
1001145708..... 1037
1001145842.....304, 308, 312, 316, 320, 324, 328, 332, 364, 368, 372, 376, 380, 384, 388, 392, 396, 400, 476, 480, 484, 502, 506
1001146132.....198, 213
1001146142.....198
1001146178.....198, 212
1001146183.....198, 212
1001146219.....296, 348, 354, 418, 424, 454, 472, 496, 516
1001146244.....212
1001146588.....476, 480, 484, 496, 502, 506, 516
1001147264.....932, 936
1001147479.....659, 1033
1001147551.....115
1001148675.....851, 853
1001148841.....939
1001148842.....939
1001148843.....296, 350, 356, 418, 424, 454, 472, 496, 516, 939
1001148902.....1037
1001148903.....1037
1001148904.....1037
1001148905.....1037
1001148906.....1037
1001148971.....1038
1001149730.....1039
1001149955.....183
1001151393.....171
1001151432.....296, 454, 472
1001151856.....936
1001152266.....961
1001152456.....574, 582
1001152457.....573, 581, 582
1001152525.....574, 582, 590, 594, 598, 602
1001152530.....574, 582
1001152533.....573, 577, 581, 585, 943
1001152566.....199
1001152742.....932
1001152963.....335, 337, 407, 409, 439, 461, 489, 530
1001152966.....814
1001152968.....814
1001152971.....814
1001153024.....349, 355, 418, 424, 496, 516
1001153257.....573, 581
1001153260.....574, 582
1001153387.....350, 356, 418, 424, 496, 516
1001154260.....616, 624, 632, 640
1001154294.....616, 624, 632, 640
1001154304.....616, 624, 632, 640

1001154306 ..... 616, 624, 632, 640
1001154405 ..... 296, 303, 307, 311, 315, 319, 323, 328, 332, 350, 356, 364, 368, 372, 376, 380, 384, 388, 392, 396, 400, 418, 424, 454, 472, 476, 480, 484, 496, 502, 506, 516, 553, 555, 557
1001155044 699
1001155045 .... 699, 1033
1001155575 ..... 296, 349, 355, 418, 424, 454, 472, 496, 516
1001155823 ..... 296, 350, 356, 418, 424, 454, 472, 496, 516
1001157520 ..... 590, 594, 598, 602
1001157521 ..... 590, 594, 598, 602
1001157525 ..... 593, 594, 601, 602
1001157528 ..... 590, 594, 598, 602
1001157592 ..... 589, 590, 597, 598
1001158007 ..... 590, 594, 598, 602
1001158008 ..... 574, 582, 590, 594, 598, 602
1001158363 ..... 574, 582
1001159118 ..... 851, 853, 1032
1001159119 ..... 851, 853
1001159120 ..... 851, 853
1001159121 853
1001159186 ..... 947, 963, 967
1001159256 .... 699, 1033
1001160505 ..... 194, 198
1001160567 ..... 101, 103, 107, 109
1001161041 883
1001161044 889
1001161048 883
1001161050 889
1001161401 ..... 21, 26
1001161402 ..... 21, 26
1001161403 ..... 21, 26
1001161709 .... 699, 1033
1001161710 .... 699, 1033
1001163131 725
1001163287 737
1001163288 743
1001163289 741
1001163292 745
1001163293 733
1001163295 747
1001163296 739
1001163297 727
1001163298 735
1001165035 ..... 296, 349, 355, 418, 424, 454, 472, 496, 516
1001165101 ..... 335, 337, 339, 341, 343, 345, 403, 405, 407, 409, 411, 413, 496, 553
1001165368 ..... 577, 585, 897
1001165820 ..... 350, 356, 418, 424, 496, 516
1001166393 ..... 295, 349, 355, 418, 424, 454, 472, 496, 516
1001167164 ..... 291, 432, 436, 442, 446, 458, 464
1001167565 663
1001167567 663
1001167596 663
1001167632 936
1001167635 935
1001168166 ..... 296, 454, 472
1001168402 663
1001169054 ..... 296, 454, 472
1001169138 ..... 296, 454, 472
1001170035 ..... 296, 454, 472
1001170764 936
1001170982 ..... 296, 454, 472, 496, 516
1001171095 ..... 272, 276, 281, 291, 339, 341, 411, 413, 449, 467, 487, 509, 539
1001171130 581
1001171131 851
1001171273 585
1001172045 1038
1001172064 935
1001172065 935
1001172760 700
1001172766 1019
1001173163 ..... 205, 213, 215
1001173164 ..... 205, 213, 215
1001173166 ..... 204, 208, 212
1001173170 ..... 204, 208, 212
1001173171 ..... 103, 105, 109, 111
1001173183 ..... 205, 213, 215
1001173184 213
1001173185 ..... 204, 208, 212
1001173186 ..... 204, 208, 212
1001173187 ..... 204, 208, 212
1001173202 212
1001173647 ..... 204, 208, 213
1001173651 ..... 204, 208, 213
1001173703 1020
1001173912 204
1001173913 25
1001173914 21
1001173915 103
1001173918 105
1001174040 ..... 618, 626, 634, 642, 663
1001174331 205
1001175237 213
1001175250 205
1001175859 ..... 204, 208, 213
1001175879 ..... 204, 208, 213
1001175880 ..... 204, 208, 213
1001176329 ..... 296, 454, 472
1001176330 ..... 296, 454, 472
1001176346 61
1001176347 63
1001176415 ..... 296, 454, 472
1001176416 ..... 296, 454, 472
1001176469 ..... 153, 157, 165
1001176862 851
1001177533 1019
1001177945 ..... 291, 432, 436, 442, 446, 458, 464
1001177946 ..... 291, 432, 436, 442, 446, 458, 464
1001177957 ..... 291, 432, 436, 442, 446, 458, 464
1001177958 ..... 291, 432, 446, 458, 464
1001177959 ..... 291, 432, 446, 458, 464
1001178236 ..... 296, 454, 472
1001178248 ..... 615, 623, 631, 639, 649
1001178797 557
1001178894 ..... 296, 454, 472
1001179154 ..... 574, 582, 590, 598
1001180051 ..... 204, 209, 213
1001180620 ..... 296, 454, 472, 496, 516
1001180690 1020
1001181045 ..... 895, 897, 1032
1001181129 ..... 123, 127
1001181134 731
1001181142 731
1001181151 1037
1001181895 ..... 356, 418, 472
1001181899 ..... 496, 516
1001182361 ..... 931, 935
1001182365 935
1001182600 1037
1001182806 179
1001182997 ..... 296, 454, 472
1001184682 181
1001185281 700
1001186318 687
1001186333 683
1001186334 685
1001186375 677
1001186379 679
1001186382 681
1001186383 673
1001186384 671
1001186389 687
1001186431 ... 749, 1033, 1039
1001186432 ..... 969, 991
1001186517 749
1001187011 ..... 296, 454, 472
1001187382 663
1001187383 663
1001187674 723
1001187681 985
1001188376 ..... 123, 127
1001188382 ..... 123, 127
1001188622 663
1001188844 663
1001188884 551
1001188887 551
1001189001 663
1001189002 663
1001190891 1039
1001190985 663
1001191272 ..... 349, 355, 418, 424, 496, 516
1001191395 1038
1001191525 1020
1001191526 1020
1001191541 ..... 21, 26
1001191620 ..... 496, 516
1001192401 925
1001193018 ..... 831, 833, 835, 837, 839, 841, 843, 845, 847, 849, 855
1001193674 ..... 21, 26
1001195214 551
1001195304 1038
1001196634 915
1001197017 ..... 763, 765, 767
1001197408 1020
1001197528 1020
1001197529 1020
1001197530 1020
1001197531 1020
1001197532 1020
1001197533 1020
1001197537 1020
1001197719 936
1001200491 663
1001200494 663
1001201081 923
1001201351 663
1001202221 1037
1001202280 551
1001202281 .... 551, 1032
1001202687 663

SECTION 11 - SPECIAL OPTIONS

1001202697.....1036
1001202749.....1038
1001203564.....1037
1001203655.....683
1001203656.....685, 687
1001204159.....551
1001204725.....663
1001204930.....1038
1001205958.....841, 843, 845, 847, 849, 855
1001206250.....843
1001206251.....847
1001206252.....855
1001206253.....835
1001206254.....839
1001206255.....831
1001206476.....863
1001206532.....700
1001206544.....1039
1001206794.....1037
1001206797.....1037
1001207969.....665
1001208299.....496, 516
1001208994.....663, 665
1001209059.....1039
1001209432.....863
1001209474.....863
1001209481.....1039
1001209664.....749
1001210028.....1039
1001210042.....1039
1001210043.....1039
1001210636.....771
1001211556.....519
1001212223.....597, 601
1001212790.....653, 657
1001213183.....1037
1001213385.....810, 814, 818, 822
1001213447.....964, 967
1001213705.....605, 607, 609, 611
1001214029.....1020
1001214570.....863
1001214571.....863
1001216630.....663
1001216876.....53
1001216877.....53
1001218850.....1019
1001219082.....911
1001219085.....1019
1001219601.....150, 154, 158, 161, 165, 1033
1001219642.....296, 299
1001219990...55, 67, 665
1001220039.....1036
1001220041.....1036
1001220044.....1036
1001220379.....932
1001220560.....123, 127
1001220735.....291, 294
1001220743.....1036
1001220745.....1036
1001220746.....1036
1001220747.....1036
1001220770.....296
1001220929.....700
1001221203..... 296, 454, 472
1001221205..... 296, 454, 472
1001221212..... 296, 454, 472, 563
1001221217..... 296, 454, 472
1001221219..... 296, 454, 472
1001221261..... 287
1001221265..... 288, 291
1001221427..... 296, 454, 472
1001221666..... 127
1001221738..... 1019
1001221802..... 123
1001222314..... 665
1001222773..... 555
1001222817..... 557
1001223055..... 1001
1001223068..... 557
1001223453.. 1001, 1011
1001223459..... 933, 936
1001223883..... 53
1001223971..... 1011
1001224048..... 1015
1001224049..... 1017
1001224050..... 1009
1001224052..... 1005
1001224053..... 1013
1001225118..... 260, 264, 268, 272, 276, 280
1001225245..... 745
1001225246..... 747
1001225247..... 737
1001225248..... 741
1001225249..... 735
1001225250..... 733
1001225251..... 743
1001225345..... 731
1001225346.... 863, 1033
1001225430..... 359, 427, 519
1001225431..... 359, 427
1001225432..... 520
1001225580..... 749, 969
1001226531..... 863
1001226541..... 913, 925
1001226636..... 913
1001226637..... 913
1001226739..... 901, 903, 905, 907, 913
1001226799..... 901, 903, 907
1001226831..... 911, 917
1001226872..... 675
1001226923..... 557
1001227449..... 905
1001227606..... 287, 432, 436, 442, 446, 458, 464, 516, 555
1001227633..... 723
1001227634..... 723
1001227960..... 1033
1001227985..... 723
1001227987..... 723
1001227996..... 987, 989
1001228053..... 624, 640, 783
1001228215..... 675
1001228224.... 723, 1033
1001228225.... 723, 1033
1001228243..... 693
1001228375..... 695
1001228376..... 689
1001228377..... 691
1001228431..... 1038
1001228488..... 79, 89
1001228617..... 79
1001228926..... 1040
1001228951..... 901
1001228954..... 901
1001228988... 757, 1027, 1029
1001229058..... 79
1001229341..... 723
1001229458..... 911
1001229599..... 296, 454, 472
1001229600..... 296, 454, 472
1001229940..... 1038
1001230934..... 931, 935
1001230935..... 931, 935
1001230936..... 931, 935
1001231235..... 1040
1001231315..... 1001
1001231316..... 1011
1001231317..... 1015
1001231318..... 1017
1001231319..... 1005
1001231320..... 1013
1001231321..... 1009
1001231801..... 1019
1001231886..... 181
1001231949..... 711
1001231950..... 707, 709
1001232010..... 707, 709, 711
1001232011..... 707, 709, 711
1001232164..... 723
1001232165..... 723
1001232642..... 751
1001232667.... 751, 1033
1001233047..... 1037
1001233492..... 496, 516
1001233534..... 1038
1001233763..... 1036
1001233959..... 173, 715
1001234800..... 935
1001235617..... 1037
1001235952..... 496, 516
1001236087..... 717
1001236091..... 173, 175
1001236398..... 1020
1001236408..... 198
1001236504..... 863
1001236505..... 863
1001236552..... 751
1001236746..... 711
1001236747..... 709
1001236754..... 143
1001236891.....705, 707, 709, 711
1001236895.....705, 707, 709, 711
1001236951.....1038
1001237124.....199
1001237125.....198, 199
1001237127.....198
1001237546.....173
1001237667.....947, 964, 967
1001237668.....947, 964, 967
1001237705.....729
1001237755.....605, 607, 609, 611
1001237825.....479
1001237826.....475
1001237862.....987, 989
1001237863.....723, 989
1001237864.....723, 987
1001237865.....723, 985
1001237882.....1037
1001237883.....1037
1001238263.....705, 707, 709, 711
1001238319.....723
1001238418.....751, 991
1001238421.....663
1001238423.....729
1001238462.....729
1001238463.....707
1001238472.....751
1001238495.....749
1001238559.....751
1001238671.....717
1001238673.....175
1001238732.....175, 717
1001239202.....936
1001239281.....181
1001239344.....873
1001239345.....873
1001239805.....863
1001241275.....1036
1001241383.....179
1001241398.....175, 717
1001241417.....1038
1001241547.....1039
1001241548.....1039
1001241585.....863
1001241630.....863
1001241891.....700, 963
1001241965.....751
1001242030.....873
1001242192.....1036
1001242373.....150, 154, 158, 169
1001243183.....1036
1001243184.....1036
1001243414.....205, 209, 213
1001243596.....967
1001243731.....179
1001243734.....181
1001243849.....179
1001243965.....1001
1001243973.....135

1001243974 133
1001243994 1011
1001244026 185
1001244027 187
1001244081 137
1001244082 139
1001244083 141
1001244205 1015
1001244206 1009
1001244207 1005
1001244208 1017
1001244209 1013
1001244298 1009
1001244462 911
1001245072 1036
1001246136 903
1001246137 907
1001246142 1036
1001246144 903
1001246145 907
1001246610 1007
1001246611 1003
1001246859 923
1001247073 1039
1001247468 .... 663, 1033
1001248140 ..... 705, 707, 709, 711
1001248141 ..... 705, 707, 709, 711
1001248539 . 1001, 1005, 1009, 1011, 1013, 1015, 1017, 1037
1001248540 . 1003, 1007, 1037
1001248546 . 1003, 1007, 1037
1001248547 .. 1001, 1037
1001248548 .. 1011, 1037
1001248549 .. 1015, 1037
1001248550 .. 1017, 1037
1001248551 .. 1005, 1037
1001248552 .. 1013, 1037
1001248553 .. 1009, 1037
1001248554 . 1001, 1003, 1005, 1009, 1011, 1013, 1015, 1017, 1019
1001248559 1007
1001249052 1039
1001249695 1040
1001249941 1040
1001249964 ..... 349, 355, 359
1001250296 ..... 204, 209, 212
1001250297 ..... 204, 209, 212
1001250465 1039
1001250466 1039
1001250595 1039
1001251019 ..... 25, 779
1001251020 .. 21, 25, 777
1001251021 ..... 632, 640, 793
1001251023 ..... 616, 632, 781
1001251024 ..... 605, 607, 609, 611, 785
1001251025..... 616, 624, 632, 640, 787
1001251026..... 616, 624, 791
1001251031..... 29, 789
1001252490..... 1036
1001252491..... 1036
1001252492..... 1036
1001252493..... 1036
1001252494..... 1036
1001252527..... 931, 935
1001252627... 1023, 1025
1001252629..... 705, 707, 709, 711
1001252686..... 1036
1001253048..... 1001
1001253049..... 1001
1001253050..... 1011
1001253051..... 1011
1001253052..... 1015
1001253053..... 1015
1001253054..... 1009
1001253056..... 1009
1001253057..... 1005
1001253058..... 1005
1001253059..... 1017
1001253060..... 1017
1001253061..... 1013
1001253062..... 1013
1001253618..... 1040
1001253619..... 1040
1001254472..... 751
1001254473..... 751
1001255133..... 618, 626, 634, 642, 663
1001255901..... 915
1001256506..... 932
1001256507..... 931
1001256859..... 121, 123, 125, 127, 129
1001256864..... 349, 355, 418, 424, 496, 516
1001256879..... 476, 480, 484, 502, 506
1001257155..... 296, 454, 472
1001257271..... 705
1001257274..... 705
1001257276..... 563
1001257277..... 259, 264, 268, 272, 276, 280
1001258800..... 496
1001260432..... 496
1001261045..... 496
1001261085..... 496
1001261213..... 1019
1001261335..... 705
1001261338..... 705
1001262016..... 1039
1001262322..... 905
1001262327..... 905
1001262959..... 1040
1001263923..... 955, 961, 971
1001264917..... 349, 355, 418, 424
1001264982..... 349, 355, 418, 424
1001265163..... 771
1001265342..... 771
1001265359..... 1036
1001265880..... 154, 158
1001265905..... 700
1001265970..... 153, 165
1001265972..... 149
1001265973..... 157
1001265974..... 153, 157, 161, 165, 169
1001265975..... 133, 135, 153
1001265976..... 137, 139, 141, 149
1001266056..... 1039
1001266098..... 1039
1001266284..... 1039
1001266290..... 1038
1001266350..... 143, 157
1001266489..... 1039
1001266807..... 1039
1001266969..... 1039
1001267315..... 1020
1001267387..... 697
1001267389..... 697, 699
1001268238..... 1019
1001268239..... 1019
1001268820..... 753, 755, 760
1001269187..... 1038
1001269322..... 753, 755, 757, 760
1001269389..... 1039
1001269573..... 753, 755, 757, 760
1001269655..... 1040
1001270105..... 67, 75
1001270339..... 873
1001270340..... 873
1001270519..... 1037
1001270572..... 215
1001270573..... 209
1001270574..... 208
1001270575..... 209, 215
1001270594..... 183
1001271323..... 873
1001271497..... 963
1001271642..... 1038
1001271731..... 1037
1001271760..... 1039
1001272090..... 1037
1001272166..... 1038
1001272202..... 1037
1001272274..... 1039
1001272659..... 909
1001272681..... 185
1001272682..... 187
1001272997..... 915
1001273012..... 909, 915
1001274249..... 1040
1001274559..... 699
1001274829..... 1038
1001274830..... 1037
1001274833..... 1037
1001275124..... 1020
1001275125..... 1020
1001275126..... 1020
1001275127..... 1020
1001275128..... 1020
1001275129..... 1020
1001275130..... 1020
1001275131..... 1020
1001275149..... 183, 185, 187
1001275628.... 699, 1032
1001275629.... 700, 1032
1001275637..... 49, 53
1001275642..... 1040
1001275650..... 1040
1001276062..... 1040
1001276610..... 909
1001276646..... 418, 424, 454, 472, 496, 516, 935
1001276923..... 1036
1001277191..... 1041
1001277210..... 1033
1001277222..... 1041
1001277593..... 496, 499
1001277599..... 487, 489, 491, 494
1001277607..... 480, 489
1001277608..... 476, 487
1001277689..... 1038
1001277844..... 1040
1001277849..... 1040
1001278483..... 150, 154, 158, 161, 165
1001278607..... 93, 95
1001278850..... 185, 187
1001280409..... 150
1001280411..... 149
1001281070..... 1040
1001281100..... 149, 153, 157, 162, 165, 1033
1001281298..... 559
1001281304..... 559
1001281305..... 559
1001281307..... 559
1001281309..... 559
1001281310..... 559
1001281311..... 559
1001281359..... 559
1001281360..... 559
1001281404..... 559
1001281452..... 1038
1001281453..... 1038
1001281457..... 1039
1001281458..... 1039
1001281461..... 1039
1001281656..... 559
1001281985..... 418, 424, 454, 472
1001281986..... 418, 424, 454, 472
1001282063..... 1037
1001282106..... 173, 715
1001282199..... 502, 509
1001282200..... 509, 511, 514
1001282201..... 501
1001282239..... 162
1001282249..... 145, 161

SECTION 11 - SPECIAL OPTIONS

1001282250.....145
1001282333.....559
1001282406.....911, 919
1001282434.....1040
1001282461.....1040
1001282650.....49
1001282651.....49
1001282652.....49
1001282653.....49
1001283008.....295, 349, 355, 418, 424, 454, 472, 496, 516
1001283776.....183, 993
1001283853.....1036
1001284070.....559
1001284100.....559
1001284101.....559
1001284518.....1040
1001284582.....715
1001284583.....715
1001284689.....1019
1001285060.....149, 153, 157, 161, 166, 961
1001285139.....149, 153, 157, 162, 166, 923
1001285278.....1019
1001286113.....149, 153, 157, 161, 166
1001286957.....343, 345, 403, 405, 491, 511, 545
1001286958.....343, 345, 403, 405, 491, 511, 547
1001286959.....43, 45
1001286966.....331
1001286967.....328, 332, 343
1001286968.....367
1001286969.....345, 368
1001286970.....327
1001286981.....483
1001286982.....484, 491
1001286983.....505
1001286984.....506, 511
1001286998.....41
1001286999.....41, 43
1001287193.....149, 153, 157, 161, 166, 947
1001287275.....133, 135, 137, 139, 141, 143, 145, 147, 925
1001288370.....67
1001288636.....1038
1001288705.....1019
1001289138.....911, 921
1001289140.....921
1001289199.....921
1001289702.....911
1001289905.....1039
1001289906.....1039
1001289964.....454, 473, 515
1001290348.....1020
1001290403.....1020
1001291401.....297, 350, 356, 418, 424, 454, 473, 516
1001291459.....1019
1001291868..... 519
1001292058..... 1020
1001292586..... 1040
1001292604..... 516, 519
1001293369..... 1038
1001293501..... 1036
1001293874..... 1040
1001293889..... 455, 473
1001294070..... 1040
1001294761..... 1020
1001294778..... 439, 449, 452
1001294808..... 442, 446, 449
1001294815..... 1020
1001294825..... 432, 436, 439
1001294846..... 431
1001294847..... 435
1001294878..... 107, 109, 111, 115
1001294928..... 445
1001295078..... 441
1001295204..... 436, 442
1001295205..... 436, 442
1001295235..... 461, 467, 470
1001295280..... 1038
1001295310..... 464, 467
1001295313..... 458, 461
1001295351..... 463
1001295352..... 457
1001297305..... 129
1001297306..... 131
1001297394..... 169
1001297564..... 822
1001297565..... 822
1001297566..... 822
1001297567..... 822
1001297568..... 822
1001297569..... 822
1001297570..... 822
1001297571..... 822
1001297572..... 822
1001297601..... 822
1001298013..... 1036
1001298014..... 1036
1001299762..... 115
1001299763..... 115
1001299820..... 1038
1001300099..... 822
1001301545..... 418, 424, 427
1001301546..... 405, 409, 413, 422
1001301590..... 403, 407, 411, 416
1001301654..... 364, 403
1001301672..... 380, 407
1001301710..... 372, 376, 405
1001301713..... 384, 388, 409
1001301718..... 375
1001301720..... 371
1001301722..... 387
1001301723..... 383
1001301725..... 363
1001301728..... 379
1001302539..... 107
1001302540..... 109
1001302541..... 111
1001302756..... 396, 400, 413
1001302757..... 392, 411
1001302758..... 395
1001302759..... 399
1001302761..... 391
1001303167..... 1040
1001303270..... 455, 473
1001305410..... 563
1001305414..... 563
1001305520..... 1037
1001306077..... 67
1001306079..... 55
1001306438..... 455, 473
1001306691..... 97, 99
1001307712..... 615, 623, 631, 639, 647
1001308593..... 1038
1001309057..... 1038
1001309211..... 147
1001309213..... 147, 165
1001309217..... 1037
1001309218..... 1037
1001309593..... 97
1001309598..... 885
1001309599..... 887
1001311034..... 751, 1033
1060341 ... 763, 765, 767, 943
1060343..... 590, 598
1060545..... 897
1060902..... 927, 951
1060903..... 763, 765, 767
1060904..... 267, 279
1060908..... 895
1060918..... 713
1060981..... 867, 871
1060982..... 869
1062255..... 911
10702077 . 590, 594, 598, 602
10702082 . 590, 594, 598, 602
10836804 . 149, 153, 157, 161, 165
1100131 ... 616, 624, 632, 640
1120549..... 29
1120550..... 29
1120555 ... 725, 727, 729, 731, 733, 735, 737, 739, 741, 743, 745, 747
1180362..... 656
1180363..... 656
1180369..... 652
1180370..... 652
1260017..... 83
1283457 ... 797, 799, 802, 805, 807, 810
1320022 ... 219, 223, 227, 231, 235, 239, 243, 247, 251, 255, 259, 263, 267, 271, 275, 279, 287, 296, 303, 307, 311, 315, 319, 323, 327, 331, 349, 355, 363, 367, 371, 375, 379, 383, 387, 391, 395, 399, 416, 422, 431, 435, 441, 445, 452, 457, 463, 470, 475, 479, 483, 494, 501, 505, 514, 551
1320058.... 259, 263, 267, 271, 275, 279
1320060.... 259, 263, 267, 271, 275, 279
1320095.... 149, 153, 157, 161, 165
1320130.... 296, 452, 470, 659
1320136.....659
1320146.... 825, 827, 829, 857
1320159.....653, 657
1320162.... 117, 119, 121, 125, 129, 131
1320177.....721, 760
1320187.... 219, 223, 227, 231, 235, 239, 243, 247, 251, 255, 287, 303, 307, 311, 315, 319, 323, 327, 331, 363, 367, 371, 375, 379, 383, 387, 391, 395, 399, 431, 435, 441, 445, 457, 463, 475, 479, 483, 501, 505
1320190.... 219, 223, 227, 231, 235, 239, 243, 247, 251, 255, 287, 303, 307, 311, 315, 319, 323, 327, 331, 363, 367, 371, 375, 379, 383, 387, 391, 395, 399, 431, 435, 441, 445, 457, 463, 475, 479, 483, 501, 505
1320223.... 259, 263, 267, 271, 275, 279
1320263. 21, 25, 652, 656
1320277.....652, 656
1320294.....652, 656
1320296.....652, 656
1320301.....659
1320302.... 753, 755, 757, 760
1320309.....995, 997
1321289.... 350, 356, 416, 422
1321385.....653, 657
1321716.... 363, 371, 375, 379, 383, 387, 391, 395, 399, 431, 435, 441, 445, 457, 463, 476, 480, 483, 501, 505
1340065.... 259, 263, 267, 271, 275, 279
1340067.....1036

1380147 ..... 189, 191
1380169 .... 204, 208, 212
1560011 ..... 995, 997
1560012 ..... 995, 997
1580012 769
1580013 1038
1600343 ..... 700, 1033
1600443 ..... 283, 1032
1670603 831
1670996 61
1671023 ... 259, 263, 267, 271, 275, 279
1671031 659
1671032 ... 616, 624, 632, 640
1671033 ... 616, 624, 632, 640
1671038 ... 194, 198, 204, 208, 212
1671039 659
1671040 29
1671043 ..... 652, 656
1671044 659
1671045 ..... 61, 63
1671046 ..... 61, 63
1671047 ..... 61, 63
1671048 ..... 61, 63
1671049 ..... 61, 63
1671092 ..... 590, 598
1671093 ..... 755, 760
1671121 ... 219, 223, 227, 231, 235, 239, 243, 247, 251, 255, 287, 303, 307, 311, 315, 319, 323, 327, 331, 363, 367, 371, 375, 379, 383, 387, 391, 395, 399, 431, 435, 441, 445, 457, 463, 475, 479, 483, 501, 505
1671191 195
1671192 194
1671193 ..... 195, 199
1671194 ... 194, 195, 198, 199
1671314 699
1701499 ..... 1001, 1003, 1005, 1007, 1009, 1011, 1013, 1015, 1017
1701501 ..... 1001, 1003, 1005, 1007, 1009, 1011, 1013, 1015, 1017
1701505 ..... 1001, 1003, 1005, 1007, 1009, 1011, 1013, 1015, 1017
1701509 ... 725, 727, 729, 731, 733, 735, 737, 739, 741, 743, 745, 747, 1001, 1003, 1005, 1007, 1009, 1011, 1013, 1015, 1017
1701518 ..... 1003, 1007
1701529 ..... 1001, 1003, 1005, 1007, 1009, 1011, 1013, 1015, 1017
1702565 699
1702566 699
1702773 ... 683, 685, 687, 1007, 1019
1702774 1019
1702868 757, 1001, 1019, 1023, 1029
1702942 ..... 236, 252
1703162 ... 259, 263, 267, 271, 275, 279, 294, 350, 356, 416, 422, 452, 470, 494, 514
1703175 1019
1703804 1001
1703805 1001
1703811 ..... 1001, 1003, 1005, 1007, 1009, 1011, 1013, 1015, 1017
1703814 ..... 1001, 1003, 1005, 1007, 1009, 1011, 1013, 1015, 1017
1703935 1017
1703936 1011
1703938 1013
1703939 1015
1703941 1017
1703942 1011
1703943 1009
1703944 1013
1703945 1015
1703947 1017
1703948 1011
1703949 1009
1703950 1013
1703951 1015
1703953 1001
1703980 1013
1703981 1015
1703982 1009
1703983 1017
1703984 1011
1704000 ..... 1011, 1019
1704001 1017
1704260 699
1704277 ..... 1001, 1003, 1005, 1007, 1009, 1011, 1013, 1015, 1017
1704412 ..... 1001, 1003, 1005, 1007, 1009, 1011, 1013, 1015, 1017
1704885 1020
1704972 1001
1705014 ..... 683, 685
1705167 1019
1705171 699
1705174 ..... 1003, 1007, 1011
1705178 1019
1705305 757, 1023, 1025, 1027, 1029
1705307 ..... 645, 1040
1705325 ..... 833, 835
1705336 1001
1705344 1013
1705345 1015
1705347 1011
1705351 1001
1705355 ..... 1027, 1029
1705358 .... 725, 727, 729, 731, 733, 735, 737, 739, 741, 743, 745, 747
1705365 1019
1705366 659
1705367 659
1705374 .... 573, 582, 851, 853
1705375 ... 590, 598, 1029
1705387 .... 573, 581, 590, 599
1705426 1013
1705427 1015
1705429 1011
1705430 1009
1705444 1019
1705445 1019
1705446 1019
1705447 1019
1705448 1019
1705449 1019
1705451 1019
1705452 1019
1705454 1019
1705455 1019
1705456 1019
1705460 .... 590, 594, 598, 602
1705461 ..... 594, 602
1705468 ..... 1003, 1007
1705489 .... 577, 585, 594, 602
1705490 ..... 1023, 1025
1705492 1001
1705493 1013
1705503 1015
1705505 1011
1705511 ..... 1001, 1003, 1005, 1007, 1009, 1011, 1013, 1015, 1017
1705552 1019
1705554 1019
1705744 699
1705745 699
1705822 ..... 1003, 1007
1705828 ..... 1003, 1007
1705864 ..... 1007, 1020
1705896 1005
1705897 1005
1705898 1005
1705901 1005
1705902 1005
1705903 1005
1705905 1005
1705906 1005
1705910 1017
1705915 1017
1705917 1017
1705921 ..... 1003, 1007
1705961 ..... 1003, 1007
1705967 1005
1705969 ..... 1015, 1019
1705980 1020
1706059 1005
1706060 1009
1706061 ..... 1015, 1017
1706062 1013
1706064 1011
1706098 ..... 1003, 1007
1706385 ..... 683, 685
1706493 687
1706501 687
1706741 703
1706770 ..... 1003, 1007
1706904 1019
2060025 ... 259, 263, 267, 271, 275, 279
2080040 ... 671, 673, 689, 693
2080051 ..... 194, 198
2110404 36, 43, 667, 797, 799, 810, 814, 818, 822
2110406 ..... 59, 76, 805
2110408 76
2110604 805
2110606 .57, 75, 667, 805
2110608 ..... 76, 810, 814, 818, 822
2110610 ... 810, 814, 818, 822
2110612 ..... 797, 799
2110808 . 36, 43, 75, 797, 799, 802
2110810 59, 76, 810, 814, 818, 822
2110812 36, 43, 802, 810, 814, 818, 822
2111010 ..... 76, 797, 799, 810, 814, 818, 822
2111012 ..... 59, 810, 814, 818, 822
2111016 818
2111212 ... 810, 814, 818, 822
2111216 75
2111616 ... 810, 814, 818, 822
2111620 822
2112016 818
2112020 ... 810, 814, 818, 822
2113232 ... 810, 814, 818, 822
2120217 665
2130404 ..... 818, 822
2130406 ..... 36, 43
2130606 ..... 75, 807, 810, 814, 818, 822
2130612 ..... 797, 799
2130808 ... 810, 814, 818, 822
2130810 ..... 57, 818
2130812 .36, 43, 818, 822
2131010 ... 810, 814, 818, 822
2131012 76
2131212 ... 117, 119, 121, 123, 125, 127, 129, 131, 810, 814
2131612 ..... 818, 822
2150404 ..... 797, 799
2150808 ... 810, 814, 818, 822
2151012 59

SECTION 11 - SPECIAL OPTIONS

2160002.....81
2170204.....797, 799
2170312.....822
2170316.....75
2170412.....822
2170504.....802, 805
2170506.....805
2170512.....123, 127
2170704.....797, 799, 802
2170708.....797, 799
2170712.....117, 119, 121, 125, 129, 131
2170804.....802
2170908.....810, 814, 818
2170912.....822
2171112.....121, 123, 125, 127, 129
2171208.....797, 799
2171210.....797, 799
2172112.....123, 127
2180344.....81
2180348.....219, 223, 227, 231, 235, 239, 243, 247, 251, 255, 551
2180467.....105, 111
2180830.....797, 799
2180832.....287, 303, 307, 311, 315, 319, 323, 327, 331, 363, 367, 371, 375, 379, 383, 387, 391, 395, 399, 431, 435, 441, 445, 457, 463, 475, 479, 483, 501, 505, 721, 760
2220063.....81
2220235.....22, 802
2220273.....294, 452, 470
2220313.....219, 223, 227, 231, 235, 239, 243, 247, 251, 255, 287, 303, 307, 311, 315, 319, 323, 327, 331, 363, 367, 371, 375, 379, 383, 387, 391, 395, 399, 431, 435, 441, 445, 457, 463, 475, 479, 483, 501, 505
2220451.....259, 263, 267, 271, 275, 279
2220478.....810, 814, 818, 822
2220498.....259, 263, 267, 271, 275, 279
2220737.....810, 814, 822
2220816.....551, 557
2220883.....59, 779, 781, 783, 785, 787
2220884.....791
2220885.....779, 781, 783, 785, 789, 791, 793
2220886.....791, 793
2220887.....791
2220890.....76
2221084.....810, 814, 818
2221086.....57, 59, 76, 667
2221117.....810, 814
2221176.....219, 223, 227, 231, 235, 239, 243, 247, 251, 255
2400060.....771, 923, 964, 967
2400064.....923, 1032
2400065.....947, 961, 1032
2400066.....947, 961
2410014.....683, 685, 687
2420191.....101, 103, 107, 109
2420203.....565
2460048.....589, 593
2460055.....565
2540038.....294, 452, 470
2560136.....699
2560187.....195, 199, 205, 213, 215
2580062.....267, 279
2600279.....150, 154, 158, 169
2600280.....194, 198
2600281.....671, 673, 689, 693
2680496.....195, 199
2680498.....195, 199
2717059.....797, 799
2720015.....296, 349, 355, 416, 422, 452, 470
2720058.....259, 263, 267, 271, 275, 279, 551
2720160.....721, 760
2720500.....259, 263, 267, 271, 275, 279
2720501.....259, 263, 267, 271, 275, 279
2750528.....81
2750532.....219, 223, 227, 231, 235, 239, 243, 247, 251, 255, 259, 263, 267, 271, 277, 279, 287, 303, 307, 311, 315, 319, 323, 327, 331, 363, 367, 371, 375, 379, 383, 387, 391, 395, 399, 431, 435, 441, 445, 457, 463, 475, 479, 483, 501, 505
2753541.....802
2753545.....797, 799, 802
2753552.....797, 799, 802
2753582.....802
2753677.....802
2753685.....802
2753703.....802
2753708.....810, 814, 818
2753713.....802
2753714.....802
2753715.....802
2753716.....797, 799, 802
2753717.....797, 799
2753718.....810, 814, 818, 822
2753719.....805
2753726.....805
2753727.....805
2753728.....807
2753729.....805
2753730.....810, 814, 818, 822
2753731.....810, 814, 818, 822
2753732.....807
2753733.....807
2753734.....807, 810, 814, 818, 822
2753735.....807
2753736.....807
2753737.....807
2753738.....807
2753739.....807
2753740.....799
2753741.....810, 814
2753742.....807
2753743.....807
2753744.....810, 814, 818, 822
2753745.....797, 799
2753746.....810, 814, 818
2753747.....802
2753748.....802
2753749.....802
2753750.....802
2753751.....799
2753752.....802
2753753.....807
2753754.....807
2753755.....797, 799
2753756.....802
2753757.....802
2753758.....810, 814, 818, 822
2753759.....802
2753760.....802
2753761.....802
2753762.....802
2753763.....797, 799
2753764.....802
2753765.....810, 814, 818, 822
2753766.....810, 814, 818, 822
2753767.....797, 799
2753768.....802
2753769.....810, 814
2753770.....810, 814
2753771.....810, 814, 818, 822
2753772.....810, 814, 818, 822
2753773.....810, 814
2753774.....810, 814, 818, 822
2753775.....810
2753776.....810, 814
2753778.....117, 119, 131
2753810.....797
2753811.....797
2753843.....117
2753999.....119
2754288.....797, 799
2792647.....805
2792772.....802
2792773.....807
2820031.....565, 569, 573, 577, 581, 585, 589, 593, 597, 601
2820035.....177
2820141.....194
2820145.....195
2820146.....195
2820170.....219, 223, 227, 231, 235, 239, 243, 247, 251, 255
2820247.....987, 989
2840016.....189, 191
2860030.....171, 1033
2900770.....75, 667, 779, 785, 787
2900792.....777, 781, 783, 785
2901443.....1040
2902065.....259, 263, 267, 271, 275, 279, 294, 349, 354, 416, 422, 452, 470, 494, 514, 549
2902099.....219, 223, 227, 231, 235, 239, 243, 247, 251, 255
2902212.....725, 727, 729, 731, 733, 735, 737, 739, 741, 743, 745, 747
2902217.....753, 755, 760
2902355.....1019
2902357.....1019
2902443.....929, 932, 935
2910890.....1040
2910894.....1041
2910895.....1041
2915046.....1038
2915072.....81
2940045.....87
2940074.....671, 673, 689, 693, 1033
2940173.....194, 198, 205, 213, 215
3020039.....616, 624, 632, 640
3020042.....616, 624, 632, 640
3160339.....33, 39
3200362.....259, 263, 268, 271, 275, 280
3200401.....259, 263, 268, 271, 275, 280
3200433.....659
3220130.....561
3251102.....565, 569, 573, 577, 581, 585, 589, 593, 597, 601
3251242.....831, 837, 839, 841, 843, 845, 847, 849, 855
3251243.....573, 582, 590, 598, 1001, 1005, 1009, 1011, 1013, 1015, 1017
3251813.....1020
3252347.....1001
3252507.....569
3271601.....551

3271605 ... 705, 707, 709, 711
3271805 .... 683, 685, 687
3272001 ... 294, 348, 354, 416, 422, 452, 470, 494, 514, 705, 707, 709, 711
3290405 ... 183, 185, 187, 577, 585, 771, 831, 833, 835, 837, 839, 841, 843, 845, 847, 849, 855, 857
3290505 ..... 569, 911
3290601 ... 195, 199, 205, 213, 215
3290605 ... 149, 153, 157, 161, 165, 721, 760
3290606 ... 677, 679, 681, 691, 695
3290607 ..... 185, 187
3290801 ... 294, 348, 354, 416, 422, 452, 470, 494, 514
3290805 ... 296, 452, 470, 863
3290806 ... 350, 356, 416, 422, 663
3290807 .... 296, 452, 470
3291001 ..... 294, 663
3291005 663
3291007 .... 294, 452, 470
3291201 663
3291205 663
3300151 ... 675, 677, 679, 681, 689, 691, 693, 695, 753, 755, 757, 760
3300220 ... 287, 303, 307, 311, 315, 319, 323, 327, 331, 367, 431, 435, 441, 445, 457, 463, 475, 479, 483, 501, 505
3300239 ... 616, 624, 632, 640
3300353 699
3300396 ... 574, 582, 590, 594, 598, 602
3300408 ..... 173, 175
3300430 ..... 659, 749
3300454 63, 67, 185, 187, 260, 264, 268, 272, 276, 280
3300458 ... 616, 624, 632, 640
3300460 ... 616, 624, 632, 640
3300461 ... 616, 624, 632, 640
3300464 29
3300482 699
3300492 ..... 653, 657
3310401 ... 294, 349, 354, 416, 422, 452, 470, 494, 514
3310601 ..... 189, 191
3310805 ..... 21, 25
3311001 ... 149, 153, 157, 161, 165, 553, 555, 574, 582, 590, 594, 598, 602
3311005 ... 565, 573, 581, 590, 594, 598, 602, 699
3311401 .... 763, 765, 767
3311402 ... 150, 154, 158, 169
3311405 ... 55, 63, 69, 71, 179, 181, 198, 212, 260, 264, 268, 272, 276, 280, 291, 294, 303, 307, 311, 315, 319, 323, 327, 331, 348, 354, 363, 367, 371, 375, 379, 383, 387, 391, 395, 399, 416, 422, 431, 435, 441, 445, 452, 457, 463, 470, 475, 479, 483, 494, 501, 505,514, 565, 569, 577, 585, 659, 697, 751, 825, 827, 829, 831, 833, 835, 837, 839, 841, 843, 845, 847, 849, 855, 857, 863, 1001, 1003, 1005, 1007, 1009, 1011, 1013, 1015, 1017
3311501 ... 195, 199, 763, 765, 767
3311505 29, 55, 117, 119, 121, 123, 125, 127, 129, 131, 177, 191, 204, 205, 208, 212, 213, 215, 219, 223, 227, 231, 235, 239, 243, 247, 251, 255, 260, 264, 268, 272, 276, 280, 665
3311508 ... 573, 581, 589, 593, 597, 601
3311601 69, 71, 101, 103, 105, 107, 109, 111, 194, 198, 205, 208, 213, 700, 751
3311605 55, 87, 117, 119, 123, 127, 131, 189, 191, 194, 198, 204, 208, 212, 260, 264, 268, 272, 276, 280, 287, 294, 303, 307, 311, 315, 319, 323, 327, 331, 348, 354, 363, 367, 371, 375, 379, 383, 387, 391, 395, 399, 416, 422, 431, 435, 441, 445, 452, 457, 463, 470, 475, 479, 483, 494, 501, 505, 514, 553, 555, 557, 565, 569, 616, 624, 632, 640, 645, 659, 665, 683, 685, 687, 697, 753, 755, 757, 760
3311608 ....618, 626, 634, 642, 653, 657
3311705 ....287, 294, 304, 308, 312, 316, 320, 324, 327, 331, 348, 354, 363, 367, 371, 375, 379, 383, 387, 391, 395, 399, 416, 422, 431, 435, 441, 445, 452, 457, 463, 470, 475, 479, 483, 494, 501, 505, 514
3311801 ....581, 585, 597, 601, 616, 624, 632, 640
3311805 ....49, 53, 93, 97, 189, 191, 204, 208, 212, 260, 264, 268, 272, 276, 280, 616, 624, 632, 640
3312002 .....79, 705, 707, 709, 711
3312005 .....25, 725, 727, 729, 731, 733, 735, 737, 739, 741, 743, 745, 747
3312205 ....725, 727, 729, 731, 733, 735, 737, 739, 741, 743, 745, 747
3312602 .....183, 185, 187
3322201 .....93, 97
3340871 ....616, 624, 632, 640
3340877 .....195, 199
3340881 21, 25, 616, 624, 632, 640
3340910 ....616, 624, 632, 640
3340912 ....616, 624, 632, 640
3340916 ....616, 624, 632, 640
3340917 ....616, 624, 632, 640
3340918 ....616, 624, 632, 640
3340921 ....616, 624, 632, 640
3340922 ....616, 624, 632, 640
3340925 .....652, 656
3340926 ....616, 624, 632, 640
3340934 .....652, 656
3340940 .....653, 657
3340941 .....653, 657, 659
3340942 .....653, 657
3340955 ....615, 623, 631, 639
3340956 ....725, 727, 729, 731, 733, 735, 737, 739, 741, 743, 745, 747
3380434 697
3380472 ....219, 223, 239, 243
3380473 ... 219, 223, 227, 231, 235, 239, 243, 247, 251, 255
3421453 ..... 721, 760
3421563 83
3421565 83
3422446 ... 219, 223, 227, 231, 235, 239, 243, 247, 251, 255, 287, 303, 307, 311, 315, 319, 323, 327, 331, 363, 367, 371, 375, 379, 383, 387, 391, 395, 399, 431, 435, 441, 445, 457, 463, 475, 479, 483, 501, 505
3422532 ... 260, 264, 268, 272, 276, 280
3422833 25
3422915 25
3422917 29
3422918 ..... 21, 25
3422926 ... 616, 624, 632, 640
3422937 ... 616, 624, 632, 640
3422940 29
3422941 29
3422955 ... 605, 607, 609, 611
3422956 ... 616, 624, 632, 640
3422957 ... 616, 624, 632, 640
3422958 ... 616, 624, 632, 640
3422959 ... 616, 624, 632, 640
3422960 ..... 21, 25
3422988 ... 605, 607, 609, 611
3423208 ... 605, 607, 609, 611
3423256 29
3430616 700
3430816 ..... 189, 191
3450404 ..... 189, 191
3451214 29
3460334 ... 725, 727, 729, 731, 733, 735, 737, 739, 741, 743, 745, 747
3470003 700
3520026 699
3520030 699
3520034 ... 194, 198, 204, 208, 212
3520054 ..... 25, 260, 264, 268, 272, 276, 280, 287, 304, 308, 312, 316, 320, 324, 327, 331, 363, 367, 371, 375, 379, 383, 387, 391, 395, 399, 431, 435, 441, 445, 457, 463, 475, 479, 483, 494, 501, 505, 514, 699

SECTION 11 - SPECIAL OPTIONS

3520071....725, 727, 729, 731, 733, 735, 737, 739, 741, 743, 745, 747
3520072....671, 673, 675, 677, 679, 681, 683, 685, 687, 689, 691, 693, 695
3520174.....1001, 1003, 1007
3520186.....194, 198
3520189.....594, 602
3520192.....594, 602
3520198....671, 673, 675, 677, 679, 681, 689, 691, 693, 695
3537416....260, 264, 268, 272, 276, 280
3537445.....189
3539971....260, 264, 268, 272, 276, 280
3572950....616, 624, 632, 640
3572951....616, 624, 632, 640
3573016.....652, 656
3573142....260, 264, 268, 272, 276, 280
3573144....150, 154, 158, 169
3573179.....652, 656
3573181.....652, 656
3573194.....652, 656
3573210.....652, 656
3573231.....194, 198
3573232....194, 198, 204, 208, 212
3573233.....194, 198
3573259.....69
3573294.....21, 25
3573301.....659
3573335.....21, 25
3573355.....85
3573400....753, 755, 757, 760
3573411....260, 264, 268, 272, 276, 280
3573412....260, 264, 268, 272, 276, 280
3573437....617, 625, 633, 641
3573444....617, 625, 633, 641
3573454.....189
3573529....260, 264, 268, 272, 276, 280
3573644....219, 223, 227, 231, 235, 239, 243, 247, 251, 255
3573645....219, 223, 239, 243
3573646....219, 223, 239, 243
3573669....219, 223, 227, 231, 235, 239, 243, 247, 251, 255
3573727....219, 223, 239, 243
3573728... 219, 223, 227, 231, 235, 239, 243, 247, 251, 255
3574091..... 765, 767
3574431..... 659
3574616..... 659
3575359..... 763
3575782..... 195, 199
3576799..... 721, 760
3577121... 753, 755, 757, 760
3580158..... 260, 272
3580276..... 565
3580298... 616, 624, 632, 640
3580300... 616, 624, 632, 640
3580302... 617, 625, 633, 641
3580306... 617, 625, 633, 641
3580317... 573, 577, 581, 585, 590, 593, 597, 601
3580318... 573, 581, 590, 597
3580319... 577, 585, 594, 601
3580320... 264, 268, 276, 280, 294, 348, 354, 416, 422, 452, 470
3580341... 617, 625, 633, 641
3580342... 616, 624, 632, 640
3600339... 260, 264, 268, 524
3600424..... 69, 71, 73
3620034.... 117, 119, 131
3641569..... 763
3740049... 149, 153, 157, 161, 165, 1033
374006769, 71, 260, 264, 268, 272, 276, 280, 1032, 1033
3740080... 260, 264, 268, 272, 276, 280, 565, 569, 961, 1032, 1033
3740086..... 991, 1033
3760133... 618, 626, 634, 642
3760170..... 83
3760233... 617, 625, 633, 641
3760308.... 205, 208, 213
3760383..... 29
3790012..... 699
3790152... 272, 276, 281, 291, 339, 341, 343, 345, 403, 405, 411, 413, 449, 467, 487, 491, 509, 511
3790155... 272, 277, 281, 291, 339, 341, 343, 345, 403, 405, 411, 413, 449, 467, 487, 491, 509, 511
3790158..... 36, 43
3820001..... 1001, 1003, 1005, 1007, 1009, 1011, 1013, 1015, 1017, 1020
3820020... 671, 673, 689, 693
3841143... 219, 223, 227, 231, 235, 239, 243, 247, 251, 255, 287, 303, 307, 311, 315, 319, 323, 327, 331, 363, 367, 371, 375, 379, 383, 387, 391, 395, 399, 431, 435, 441, 445, 457, 463, 475, 479, 483, 501, 505, 617, 625, 633, 641, 663
3841203... 617, 625, 633, 641
384125825, 29, 617, 625, 633, 641
384128721, 25, 605, 607, 609, 611
3841340..... 55, 101, 103, 105, 107, 109, 111
3841581... 605, 607, 609, 611
3890029..... 633, 641
3890030..... 633, 641
3890031..... 633, 641
3890032..... 633, 641
3890033..... 633, 641
3890034..... 617, 625
3890035..... 617, 625
3890036..... 617, 625
3890037..... 617, 625
3890038..... 617, 625
3900054.... 683, 685, 687
3900174.... 204, 208, 212
3900210... 204, 205, 208, 212, 213, 215, 665
3900232... 194, 198, 204, 208, 212
3900251... 150, 154, 158, 169
3900260..... 652, 656
3900267..... 574, 582
3900270..... 21, 25
3900272... 219, 223, 227, 231, 235, 239, 243, 247, 251, 255
390028361, 69, 103, 105, 109, 111, 194, 198, 652, 656, 665
3900300..... 574, 582
3900316.... 652, 656, 665
3900322..... 565, 569
3900349..... 699
3900363... 195, 199, 205, 213, 215
3910408... 294, 349, 354, 416, 422, 452, 470, 494, 514
3910606... 573, 581, 590, 597, 827, 829, 851, 853
3910608..... 189, 191
3910804.....171
3911010.....175, 717
3930606.....659
3930816.....659
3930820.....21, 25
3931016....573, 581, 589, 593, 597, 601
3931020.....29
3931408.....749
3931412.....29
3931414.....659
3931432....294, 349, 354, 416, 422, 452, 470, 494, 514
3931508....294, 350, 356, 416, 422, 494, 514
3931512.....95, 294, 348, 354, 416, 422, 494
3931616....133, 135, 137, 139, 141, 143, 145, 147, 149, 153, 157, 161, 165
3931628....294, 348, 354, 416, 422, 452, 470
3932024.....29
3951620.....652, 656
3952020.....79
3960418....150, 154, 158, 169
3960422....573, 581, 590, 597, 827, 829, 851, 853
3960447.....205, 208, 213
3960464.....195, 199
3960543....260, 264, 268, 272, 276, 280, 294, 348, 354, 416, 422, 452, 470, 494, 514
3960544....260, 264, 268, 272, 276, 280, 294, 348, 354, 416, 422, 452, 470, 494, 514
3960551.....29
3960552.....29
3980006.....69, 71
3990010.....947, 1032
4010408.....577, 585, 857
4010608.....721, 760
4010618....677, 679, 681, 691, 695
4031505.....723
4031509.....183, 185, 187
4031516.....751
4031608.....569
4031907.....294, 452, 470
4031908.....452, 470, 514
4031912.....453, 470, 514
4031914....294, 348, 354, 416, 422, 494
4032014....294, 348, 354, 416, 422, 453, 471
4032022....260, 264, 268, 272, 276, 280
4060092.....829
4060802....565, 569, 573, 577, 581, 585, 590, 594, 597, 601

4060804 ... 195, 199, 260, 264, 268, 272, 276, 280, 653, 657
4060805 ... 260, 264, 268, 272, 276, 280
4060806 ..... 195, 199
4060808 55
4060906 703
4061032 822
4070863 ... 617, 625, 633, 641
4070864 ... 617, 625, 633, 641
4070895 ... 617, 625, 633, 641
4070897 ... 617, 625, 633, 641
4070898 ... 617, 625, 633, 641
4071012 ... 617, 625, 633, 641
4071013 ..... 625, 641
4071015 ... 617, 625, 633, 641
4071017 ... 617, 625, 633, 641
4071018 ... 617, 625, 633, 641
4071019 ... 617, 625, 633, 641
4071021 ..... 652, 656
4071022 ..... 653, 657
4071023 ..... 653, 657
4071024 ... 617, 625, 633, 641
4071025 ... 617, 625, 633, 641
4071027 ... 617, 625, 633, 641
4071028 ... 617, 625, 633, 641
4071029 ... 617, 625, 633, 641
4071031 ... 617, 625, 633, 641
4071035 ..... 21, 25
4071036 ..... 21, 25
4071039 ..... 21, 25
4071040 ..... 21, 25
4071041 79
4071042 ..... 21, 25
4071044 ... 617, 625, 633, 641
4071045 ... 617, 625, 633, 641
4071046 ... 617, 625, 633, 641
4071048 ..... 194, 198
4071049 22
4071050 22
4071054 ..... 21, 25
4071055 ..... 21, 25
4120040 ..... 645, 1040
4120043 ..... 645, 1040
4160194 ... 194, 198, 204, 208
4160197 ... 617, 625, 633, 641
4240018 ... 219, 223, 227, 231, 235, 239, 243, 247, 251, 255, 287, 303, 307, 311, 315, 319, 323, 327, 331, 363, 367, 371, 375, 379, 383, 387, 391, 395, 399, 431, 435, 441, 445, 457, 463, 475, 479, 483, 501, 505, 573, 577, 581, 585, 590, 594, 597, 601, 653, 657, 822, 851, 853
4240032 ... 133, 135, 137, 139, 141, 143, 145, 147, 185, 187, 297, 350, 356, 416, 422, 453, 471, 516, 899, 901, 903, 905, 907, 909, 929, 995, 997
4240033 ... 723, 749, 751, 873, 899, 929, 955, 971
4240099 ... 219, 223, 227, 231, 235, 239, 243, 247, 251, 255, 260, 264, 268, 272, 276, 280, 294, 350, 356, 416, 422, 453, 471, 476, 480, 483, 494, 501, 505, 514, 700, 753, 755, 760, 763, 765, 767
4240139 ... 101, 103, 107, 109
4240149 ... 725, 727, 729, 731, 733, 735, 737, 739, 741, 743, 745, 747
4240150 ..... 195, 199
4240153 ..... 653, 657
4240155 21, 26, 653, 657
4240156 ..... 653, 657
4300157 ... 581, 585, 597, 601
4340923 ..... 194, 198
4340924 ..... 194, 198
4340995 ..... 194, 198
4340996 ..... 194, 198
4340999 ... 194, 198, 204, 208, 212
4341001 ..... 194, 198
4341158 659
4360057 .... 763, 765, 767
4360070 ... 574, 582, 590, 594, 598, 602, 1032
4360274 ... 149, 153, 157, 161, 165, 1033
4360328 ... 149, 153, 157, 161, 165, 1033
4360336 ... 565, 569, 573, 577, 581, 585, 590, 594, 597, 601, 703, 1033
4360387 ... 153, 157, 165, 699, 1033
4360407 ..... 699, 1032
4360469 ..... 171, 1033
4360475 .... 149, 153, 157, 161, 165, 1033
4360476 .... 149, 153, 157, 161, 165, 699
4360505 ..... 29, 1033
4360527 ..... 659, 1033
4360542 ..... 565, 1032
4360543 ..... 659, 1033
4360548 ..... 659, 1033
4360578 ..... 21, 25, 659, 1033
4400457 .... 101, 103, 105, 113
4420014 .... 725, 727, 729, 731, 733, 735, 737, 739, 741, 743, 745, 747
4420037 69, 71, 753, 755, 757, 760
4420038 .... 101, 103, 105, 107, 109, 111
4420051 1019
4420060 569
4420066 .... 725, 727, 729, 731, 733, 735, 737, 739, 741, 743, 745, 747
4460007 699
4460016 ..... 963, 967
4460019 .... 929, 932, 935, 949, 961
4460027 565
4460042 ..... 933, 936, 964
4460043 ..... 932, 935
4460049 ..... 763, 765, 767
4460051 ..... 827, 829
4460068 ..... 574, 582
4460071 .... 573, 581, 590, 597, 713
4460125 829
4460142 ..... 947, 963
4460144 923
4460183 ..... 923, 963, 967
4460190 565
4460205 827
4460213 963
4460224 586
4460225 .... 943, 945, 947, 963
4460226 .... 713, 763, 765, 767, 859, 964
4460227 .... 859, 873, 947, 963, 967
4460234 .... 133, 135, 137, 139, 141, 143, 145, 147, 268, 280, 356, 364, 372, 376, 380, 384, 388, 392, 396, 400, 416, 431, 435, 441, 445, 457, 463, 471, 476, 480, 484, 502, 505, 699, 763, 765, 767, 901, 903, 905, 907
4460247 ..... 932, 935
4460256 .... 949, 961, 995, 997
4460259 ... 771, 947, 949, 963, 967
4460260 ... 771, 947, 949, 963, 967
4460267 .... 961, 963, 967
4460268 ... 177, 179, 181, 943, 945
4460294 586
4460297 947
4460312 949
4460313 ... 923, 929, 947, 949
4460315 ... 597, 827, 829, 929
4460320 961
4460346 ... 573, 581, 590, 597, 827
4460374 961
4460418 .... 947, 963, 967
4460419 .... 947, 963, 967
4460424 .... 177, 179, 181
4460425 ... 574, 582, 590, 594, 598, 602, 763, 765, 767, 851, 853
4460426 ... 149, 153, 157, 161, 165, 574, 582, 590, 594, 598, 602
4460428 699
4460434 ..... 963, 967
4460458 ..... 932, 935
4460464 ... 185, 187, 713, 771, 865, 873, 899, 913, 915, 923, 925, 927, 932, 941, 947, 949, 955, 961, 963, 967, 969, 971, 973, 991, 993
4460465 ... 183, 590, 594, 599, 602, 771, 865, 873, 899, 913, 917, 923, 925, 929, 931, 932, 935, 936, 943, 945, 947, 949, 951, 953, 955, 957, 959, 961, 963, 967, 969, 971
4460466 ..... 95, 723, 771, 865, 867, 873, 899, 913, 917, 919, 923, 925, 929, 931, 932, 935, 936, 949, 953, 957, 959, 961, 963, 967, 969, 971, 985, 991, 993
4460467 1040
4460470 ... 149, 153, 157, 161, 165, 699
4460471 ... 149, 153, 157, 161, 165, 699
4460473 ..... 957, 959
4460483 ..... 574, 582
4460488 ..... 185, 187
4460496 ... 133, 135, 137, 139, 141, 143, 145, 147, 149, 153, 157, 161, 165, 699
4460497 ... 133, 135, 137, 139, 141, 143, 145,

147, 149, 153, 157, 161, 165, 699
4460508....723, 947, 949, 963, 967
4460509.....957, 959
4460510.....1040
4460518....865, 917, 919, 967
4460526....149, 153, 157, 161, 165
4460536.....947, 963, 967
4460539....861, 867, 917, 935, 949, 961, 963, 967
4460612.....851, 853
4460702.....929, 995, 997
4460703.....932, 935
4460708.....964
4460709.....829
4460722.....869, 871
4460746.....935
4460748.....935
4460761....859, 873, 947, 967
4460806....841, 843, 845, 847, 947, 963
4460807.....943, 945
4460808.....943, 945
4460836.....95, 899, 931, 961
4460837.....873
4460842.....961
4460843.....961
4460865.....957, 959
4460866....157, 161, 947, 963, 967
4460868.....947
4460871....150, 154, 158, 162, 165, 923, 947, 949, 961, 963, 967
4460873.....947, 963, 967
4460874....149, 153, 157, 161, 165, 963, 967
4460875....149, 153, 157, 161, 165
4460876.....947, 963, 967
4460877.....947
4460878.....947
4460879.....771, 963, 967
4460880.....899, 973
4460884.....95, 771, 871, 873, 899, 925, 936, 961, 969
4460887....771, 947, 949, 963, 967
4460888.....963
4460891....183, 865, 925, 941, 949, 951, 971
4460892....149, 153, 157, 161, 165, 899
4460894....867, 873, 899, 913, 925, 929, 932, 936, 947, 961, 963, 967
4460897....185, 187, 927, 941, 961, 971, 973, 993
4460899....867, 873, 949, 969, 985, 991
4460905... 149, 153, 157, 161, 165, 923, 963, 967
4460910..... 659, 987
4460911... 869, 871, 985, 995, 997
4460912... 869, 871, 995, 997
4460913..... 659
4460914..... 29, 149, 153, 157, 161, 165, 659
4460917..... 659
4460918... 869, 871, 995, 997
4460925..... 963, 967
4460926..... 971
4460928..... 865, 971
4460930... 899, 925, 929, 931, 932, 936, 953
4460931.... 931, 949, 993
4460932... 771, 861, 869, 873, 915, 932, 941
4460933... 865, 899, 917, 923, 925, 932, 947, 963, 967
4460934..... 899, 931
4460935..... 899, 931
4460941... 873, 899, 931, 941, 985
4460942... 723, 873, 932, 936, 941, 947, 961
4460943... 861, 869, 873, 899, 925, 931, 949, 963, 967, 985
4460944..... 95, 861, 867, 871, 873, 899, 923, 929, 931, 932, 935, 936, 947, 949, 961, 963, 967
4460945..... 917, 936
4460950..... 95, 899, 932
4460956..... 895, 897
4460957..... 895, 897
4460958..... 853
4460962..... 755, 760
4460963..... 590, 598
4460965..... 961
4460966..... 873
4460967... 590, 594, 599, 602
4460968.21, 25, 569, 659
4460970..... 919, 931
4460971..... 721, 760
4460982..... 932
4461005..... 929
4461006..... 929
4461008.... 929, 933, 935
4461013..... 995, 997
4461042..... 925
4461052..... 929
4461053..... 929
4461054... 929, 933, 936, 941
4461060..... 929
4461070... 865, 929, 931, 932
4461071.... 929, 932, 935
4461072.... 929, 932, 935
4461073.... 929, 932, 935
4461074.... 929, 932, 935
4461077..... 985, 991
4461095... 865, 929, 931, 932
4461097..... 929
4461196..... 975
4461198..... 835, 975
4461199..... 977
4461201..... 839, 977
4461205..... 979, 981
4461244..... 843, 979
4461245..... 847, 981
4461246..... 855, 983
4461249..... 983
4530028..... 773
4562516..... 653, 657
4568293... 260, 264, 268, 272, 276, 280
4568423... 617, 625, 633, 641
4568426.... 117, 119, 131
4568427.... 117, 119, 131
4640438..... 785
4640452..... 787
4640465..... 95
4640509... 777, 781, 783, 785
4640751... 260, 264, 268, 272, 276, 280, 296, 350, 356, 416, 422, 453, 471, 494, 514
4641114..... 787
4641122..... 49
4641155..... 55
4641210..... 785
4641247.... 117, 121, 123
4641248..... 781, 783
4641255..... 667
4641256..... 791, 793
4641260..... 787
4641268..... 55, 57
4641276..... 779
4641454..... 55, 59
4641460..... 665, 667
4700038... 616, 624, 632, 640
4700039... 616, 624, 632, 640
4710400... 294, 349, 354, 417, 423, 453, 471, 494, 514
4711000... 553, 555, 574, 582, 590, 594, 598, 602
4711400... 55, 63, 67, 69, 71, 179, 181, 194, 198, 205, 212, 213, 215, 219, 223, 227, 231, 235, 239, 243, 247, 251, 255, 287, 291, 294, 303, 307, 311, 315, 319, 323, 327, 331, 349, 354, 363, 367, 371, 375, 379, 383, 387, 391, 395, 399, 417, 423, 431, 435, 441, 445, 453, 457, 463, 471, 475, 479, 483, 494, 501, 505, 514, 573, 577, 581, 585, 590, 594, 597, 601, 652, 656, 659, 675, 677, 679, 681, 689, 691, 693, 695, 749, 751, 831, 833, 835, 837, 839, 841, 843, 845, 847, 849, 855, 857
4711500....29, 55, 67, 87, 117, 119, 121, 123, 125, 127, 129, 131, 191, 204, 205, 208, 212, 213, 215, 219, 223, 227, 231, 235, 239, 243, 247, 251, 255, 260, 264, 268, 272, 276, 280, 294, 348, 354, 417, 423, 453, 471, 494, 514, 653, 657, 665
4711600....21, 25, 55, 67, 69, 71, 123, 127, 189, 191, 194, 198, 204, 208, 212, 219, 223, 227, 231, 235, 239, 243, 247, 251, 255, 260, 264, 268, 272, 276, 280, 287, 295, 303, 307, 311, 315, 319, 323, 327, 331, 348, 354, 363, 367, 371, 375, 379, 383, 387, 391, 395, 399, 417, 423, 431, 435, 441, 445, 453, 457, 463, 471, 475, 479, 483, 494, 501, 505, 514, 551, 553, 555, 557, 565, 569, 573, 577, 581, 585, 590, 594, 597, 601, 617, 625, 633, 641, 645, 653, 657, 659, 665, 700, 705, 707, 709, 711
4711700....287, 295, 304, 308, 312, 316, 320, 324, 327, 331, 348, 354, 363, 367, 371, 375, 379, 383, 387, 391, 395, 399, 417, 423, 431, 435, 441, 445, 453, 457, 463, 471, 475, 479, 483, 494, 501, 505, 514, 551, 565, 569
4711800....21, 25, 29, 55, 189, 191, 260, 264, 268, 272, 276, 280, 683, 685, 687
4711900.....565, 569
4712000.....25, 705, 707, 709, 711, 725, 727, 729, 731, 733, 735,

737, 739, 741, 743, 745, 747
4712200 ... 725, 727, 729, 731, 733, 735, 737, 739, 741, 743, 745, 747
4740171 ..... 337, 407
4740181 29
4740229 29
4740274 ... 260, 264, 268, 272, 276, 280
4740362 697
4740397 ... 149, 153, 157, 161, 165, 565, 569
4740430 61, 63, 291, 431, 435, 441, 445, 457, 463
4740461 ..... 21, 25
4740500 ..... 194, 198
4740505 29
4740509 ... 617, 625, 633, 641
4740518 ... 260, 264, 268, 272, 276, 280
4750600 ..... 189, 191
4750800 ..... 21, 25, 699
4751000 ... 101, 103, 105, 107, 109, 111, 149, 153, 157, 161, 165, 565, 573, 581, 590, 594, 598, 602, 699
4751400 ..... 87, 149, 153, 157, 161, 165, 185, 187, 205, 213, 215, 260, 264, 268, 272, 276, 280, 295, 348, 354, 417, 423, 453, 471, 494, 514, 566, 569, 697, 699, 753, 755, 757, 760, 763, 765, 767, 769, 863, 1001, 1003, 1005, 1007, 1009, 1011, 1013, 1015, 1017
4751500 ... 177, 195, 199, 204, 208, 212, 573, 581, 590, 594, 597, 601, 653, 657, 763, 765, 767
4751600 ... 29, 61, 85, 87, 101, 103, 105, 107, 109, 111, 117, 119, 131, 133, 135, 137, 139, 141, 143, 145, 147, 149, 157, 161, 165, 194, 198, 204, 208, 212, 605, 607, 609, 611, 665, 697, 753, 755, 757, 760
4751700 ... 295, 348, 354, 417, 423, 453, 471, 494, 514
4751800 ... 49, 53, 93, 97, 204, 208, 212, 683, 685, 687, 763, 765, 767
4752000 ... 219, 223, 227, 231, 235, 239, 243, 247, 251, 255, 287, 303, 307, 311, 315, 319, 323, 327, 331, 363, 367, 371, 375, 379, 383, 387, 391, 395, 399, 431, 435, 441, 445, 457, 463, 475, 479, 483, 501, 505
4755000 29
4760600 ..... 827, 829
4760800 699
4761400 769
4770600 ..... 189, 191
4791400 69, 71, 260, 264, 268, 272, 276, 280, 348, 354, 417, 423, 494, 514, 573, 577, 581, 585, 590, 594, 597, 601
4811400 ... 183, 185, 187, 771, 831, 833, 835, 837, 839, 841, 843, 845, 847, 849, 855
4811600 ..... 29, 569, 911
4811700 ... 149, 153, 158, 161, 165, 185, 187, 677, 679, 681, 691, 695, 721, 760
4811900 ... 195, 199, 295, 348, 354, 417, 423, 453, 471, 495, 514, 663, 863
4811902 ... 295, 348, 354, 417, 423, 453, 471, 495, 515
4812000 ... 295, 348, 354, 417, 423, 453, 471, 495, 663
4812002 .... 296, 453, 471
4812100 ... 287, 295, 303, 307, 311, 315, 319, 323, 327, 331, 348, 354, 363, 367, 371, 375, 379, 383, 387, 391, 395, 399, 417, 423, 431, 435, 441, 445, 453, 457, 463, 471, 475, 479, 483, 495, 501, 505, 515, 559, 663
4812200 ... 295, 348, 354, 417, 423, 453, 471, 495, 515
4831900 ... 348, 354, 417, 423, 495, 515
4846383 ..... 21, 26
4846423 657
4846429 657
4846431 ..... 653, 657
4846453 ... 617, 625, 633, 641
4846462 ... 617, 625, 633, 641
4846476 ..... 101, 107
4846482 ... 617, 625, 633, 641
4846484 659
4846485 ..... 653, 657
4846503 194
4846515 653
4846516 653
4846552 .... 260, 264, 268, 272, 276, 280
4846637 ..... 21, 26
4846673 ..... 765, 767
4846945 .... 264, 268, 276, 280
4846946 .... 260, 264, 268, 272, 276, 280
4860236 49
4891400 659
4891500 ..... 566, 569
4891600 .... 205, 208, 213, 272, 276, 280, 291, 339, 341, 343, 345, 403, 405, 411, 413, 449, 467, 487, 491, 509, 511, 618, 626, 634, 642, 645, 653, 657, 663
4891800 .... 189, 191, 260, 264, 268, 272, 276, 280, 291, 335, 339, 341, 343, 345, 403, 405, 409, 411, 413, 439, 449, 461, 467, 487, 489, 491, 509, 511, 573, 577, 581, 585, 590, 594, 597, 601, 653, 657
4892000 .... 31, 41, 47, 49, 51, 53, 81, 295, 348, 354, 417, 423, 453, 471, 495, 515, 566, 569, 617, 625, 633, 641
4892400 79
4892600001 ..... 618, 626, 634, 642, 663
4920385 ..... 296, 453, 471
4921850 1040
4922641 .... 569, 591, 594, 599, 602
4922666 ..... 699, 859
4922672 .... 875, 879, 887, 891, 957
4922673 .... 877, 881, 883, 885, 889, 893, 959
4922696 899
4922716 867
4922718 861
4922758 877
4922759 875
4922760 881
4922761 879
4922762 .... 877, 881, 883, 885, 889, 893
4922763 .... 875, 879, 887, 891
4922767 955
4922777 971
4922780 871
4922781 869
4922784 951
4922785 927
4922795 893
4922796 891
4922947 997
4922948 995
4922972 ... 590, 594, 597, 601, 945
4923256 953
4923468 ... 260, 264, 268, 272, 276, 280
4923592 ... 260, 264, 272, 276
5241200 ..... 36, 43, 663
5250808 .... 296, 453, 471
5251008 663
5251016 663
70000044 283
70000124 565
70000125 565
70000345 . 283, 299, 359, 427, 519
70000619 . 589, 593, 597, 601
70000793 549
70000796 649
70000801 59
70000802 59
70000803 ..... 59, 1033
70000804 59
70000805 59
70000806 59
70000852 39
70000853 39
70000854 39
70000855 39
70000856 39
70000857 39
70000858 39
70000859 39
70000860 39
70000861 39
70000862 39
70000863 . 589, 593, 598, 601
70000916 283
70000917 283
70000918 283
70000919 283
70000950 531
70001017 561
70001056 73
70001100 . 589, 593, 597, 601
70001101 95
70001102 95
70001125 283
70001126 283
70001128 283
70001129 283
70001130 283
70001131 283
70001135 283
70001384 . 589, 593, 597, 601
70001424 719
70001425 719
70001427 719
70001428 719
70001429 719
70001430 719

SECTION 11 - SPECIAL OPTIONS

70001431.....719, 1032
70001432.....719, 1033
70001435.....283
70001640.....649
70001696.....589, 593
70001847.....283
70001850.....283
70001857.....283
70001867.....283
70001868.....283
70001870..283, 299, 359, 428, 520
70001871.....283
70001930.....75
70001939.....57
70001952.....524
70001953.....589, 593
70001955.....539
70001956.....539
70001958.....537
70001966..574, 577, 582, 585, 589, 593, 598, 601
70001968.....525, 531
70001973..589, 593, 598, 602
70001974..589, 593, 598, 602
70001976.....57, 75
70002015.....35
70002016.....35
70002018.....35
70002019.....35
70002020.....35
70002021.....35
70002026.....35
70002027.....35
70002029.....35
70002030.....35
70002031.....35
70002032.....35, 89
70002033.....35
70002034.....35
70002035.....35
70002036.....35
70002037.....35
70002039.....35
70002040.....35
70002041.....35
70002044.....35
70002045.....35
70002046.....35
70002047.....35
70002048.....35
70002049.....35
70002050.....35
70002052.....35
70002057.....35, 89
70002088.....589, 593
70002097.....665, 1032
70002132.....536
70002133.....536, 539
70002134.....536
70002135.....536
70002136.....536
70002137.....536
70002138.....536
70002139.....536
70002140 536
70002141 536
70002142 536
70002145 536
70002148 536
70002150 536
70002151 536
70002152 536
70002153 536
70002154 536
70002155 536
70002156 536
70002157 536
70002158 536
70002159 536
70002160 536
70002161 536
70002162 536
70002163 536
70002164 536
70002165 536
70002168 537
70002174 537
70002175 537
70002177 537
70002178 537
70002179 537
70002231 . 219, 223, 227, 231, 235, 240, 244, 247, 251, 255, 287, 303, 307, 311, 315, 319, 323, 327, 331, 363, 367, 371, 375, 379, 383, 387, 391, 395, 399, 431, 435, 441, 445, 457, 463, 475, 479, 483, 1032
70002247 36
70002248 36
70002249 36
70002255 ..... 589, 593
70002291 ..... 598, 602
70002297 ..... 589, 593
70002373 787
70002410 789
70002412 .. 779, 781, 783
70002460 . 589, 593, 598, 602
70002569 526
70002576 543
70002578 539
70002580 539
70002582 539
70002583 539
70002585 539
70002586 539
70002588 539
70002589 539
70002590 539
70002592 540
70002593 540
70002599 540
70002600 536
70002601 536
70002602 536
70002604 537
70002605 537
70002606 537
70002607 537
70002608 537
70002609 537
70002610 537
70002612 537
70002616 537
70002617 537
70002618 536
70002619 536
70002620 536
70002621 537
70002622 537
70002623 537
70002674 35
70002718 . 283, 299, 359, 428, 520
70002758 76
70002759 ..... 75, 76
70002760 76
70002859 649
70002902 713
70002903 713
70002904 713
70002905 713
70003135 283
70003136 283
70003165 532
70003167 531
70003170 532
70003173 530
70003174 530
70003175 530
70003177 530
70003340 ..... 531, 532
70003475 283
70003628 39
70003631 . 589, 593, 598, 601
70003708 . 574, 577, 582, 585, 589, 593, 598, 601
70003709 . 574, 577, 582, 585, 589, 593, 598, 601
70003913 ..... 652, 656
70003914 ..... 652, 656
70003915 ..... 652, 656
70003917 ..... 652, 656
70003918 ..... 652, 656
70004092 . 574, 577, 582, 585, 598, 602
70004094 ..... 598, 602
70004098 . 574, 582, 598, 602
70004099 . 582, 585, 598, 601
70004169 ..... 589, 593
70004171 . 574, 577, 589, 593
70004185 1040
70004186 ..... 781, 783
70004237 789
70004276 300
70004277 . 301, 360, 428, 520
70004280 .. 299, 359, 520
70004282 ..... 300, 360
70004328 665
70004413.....105, 111
70004414..101, 103, 107, 109
70004416.....539
70004417.....539
70004420.....539
70004421.....539
70004422.....540
70004423.....539
70004426.....539
70004467.....89
70004469.....89
70004474.....89
70004477.....89
70004480.....89
70004481.....89
70004494.....90
70004501.....300, 360
70004502.....360
70004504...360, 427, 519
70004505...359, 427, 520
70004506.....359
70004507.....359
70004508...359, 427, 520
70004509.....359
70004510.....359
70004511.....299
70004512.....299, 1032
70004646.....1040
70004647.....1040
70004648.....1040
70004676..574, 577, 582, 585
70004677.....577
70004678..574, 577, 582, 586
70004680..574, 577, 582, 586
70004681.....577, 586
70004682..574, 577, 582, 586
70004683.....578, 586
70004684.....574
70004685.....574, 582
70004686.....585
70004687.....582
70005023.....45, 545
70005041.....545
70005143.....787
70005153.....779, 783
70005171...299, 359, 520
70005172..299, 359, 428, 520
70005173...299, 428, 520
70005174.....299
70005176.....428, 520
70005177...300, 428, 520
70005181.....300
70005184...300, 427, 519
70005188.....300
70005189.....300
70005191.....301
70005317.....89
70005318.....89
70005418.....540
70005433.....785, 793
70005480.....530

70005481 530
70005527 360
70005647 ..... 301, 360
70005648 301, 360, 1032
70005839 ..... 791, 793
70005920 299
70005921 ..... 299, 359
70005923 300
70005924 300
70005925 300
70005926 ..... 300, 360
70005927 300
70005928 300
70005929 ..... 300, 360
70005931 .. 360, 427, 519
70005938 ..... 428, 520
70005941 . 299, 359, 428, 520
70005942 . 299, 359, 428, 520
70006093 ..... 598, 601
70006094 ..... 598, 602
70006095 598, 602, 1032
70006096 ..... 598, 602
70006097 ..... 598, 602
70006127 299
70006144 359
70006344 ..... 791, 793
70006403 557
70006404 557
70006405 ..... 557, 1032
70006406 557
70006407 557
70006408 557
70006409 557
70006410 557
70006552 . 573, 577, 581, 585
70006553 . 573, 577, 581, 585, 1033
70006596 . 779, 781, 787, 789
70006653 360
70006986 89
70006987 89
70006988 89
70006989 89
70006990 89
70006991 89
70006992 89
70006993 89
70006994 89
70006995 89
70006996 89
70006997 89
70006998 89
70006999 89
70007000 89
70007001 89
70007002 89
70007003 89
70007004 90
70007005 90
70007006 90
70007007 90
70007008 90
70007009 89
70007010 90
70007011 89
70007012 90
70007013 90
70007015 783
70007016 783
70007017 783
70007018 783
70007019 783
70007020 783
70007178 532
70007246 785
70007282 785
70007325 .. 360, 427, 519
70007326 ..... 360, 519
70007327 360
70007328 .. 360, 427, 519
70007329 360
70007330 ..... 360, 427
70007331 ..... 360, 427
70007353 284
70007354 ..... 427, 519
70007382 777
70007383 777
70007384 777
70007385 777
70007386 777
70007435 785
70007438 785
70007510 95
70007603 ..... 427, 519
70007786 547
70007787 547
70007788 547
70007789 547
70007790 547
70007791 547
70007792 547
70007793 547
70007794 547
70007795 547
70007796 547
70007797 547
70007798 547
70007799 547
70007800 547
70007801 547
70007984 779
70007985 779
70007987 779
70007988 779
70007989 779
70007993 787
70007994 787
70007995 787
70007996 787
70007997 787
70007998 787
70007999 781
70008000 781
70008001 781
70008002 781
70008003 781
70008004 789
70008005 789
70008006 789
70008007 789
70008039 791
70008040 791
70008042 791
70008043 ..... 791, 793
70008044 ..... 791, 793
70008045 ..... 791, 793
70008046 ..... 791, 793
70008047 ..... 791, 793
70008048 ..... 791, 793
70008049 ..... 791, 793
70008050 791
70008083 793
70008084 793
70008085 793
70008086 793
70008087 793
70008180 785
70008181 785
70008182 785
70008183 785
70008184 785
70008185 785
70008296 428
70008359 95
70008360 95
70008361 95
70008362 95
70008363 95
70008364 95
70008365 95
70008422 ..... 427, 520
70008431 519
70008432 519
70008436 427
70008490 545
70008491 545
70008492 545
70008493 545
70008494 545
70008495 545
70008496 545
70008497 545
70008498 545
70008499 545
70008500 545
70008501 545
70008502 545
70008503 545
70008504 545
70008505 545
70008506 545
70008507 545
70008508 545
70008509 545
70008510 545
70008511 545
70008512 545
70008513 45
70008514 45
70008515 45
70008516 45
70008517 45
70008518 45
70008519 45
70008520 45
70008521 45
70008522 45
70008523 45
70008524 45
70008525 547
70008526 547
70008527 547
70008528 547
70008537 519
70008558 519
70008564 519
70008604 519
70008607 520
70008608 519
700089041 791
70020329 531
70020336 532
70021867 ..... 524, 530
70021895 300
70022286 539
70022564 . 779, 781, 785, 787, 789
70023592 . 295, 349, 355, 417, 423, 495, 515, 1032
70023593 . 295, 349, 355, 417, 423, 495, 515, 1032
70024190 . 296, 349, 355, 417, 423, 453, 471, 495, 515, 1032
70024484 300
70024488 299
70024494 ..... 299, 359
70024502 300
70024504 . 299, 301, 360, 427, 519
70024505 519
70024507 . 301, 360, 427, 519
70024509 300
70024513 . 299, 359, 427, 519
70024517 299
70024904 .. 359, 428, 520
70024905 . 299, 359, 428, 520
70024906 . 299, 359, 428, 520
70024910 300
70024912 ..... 300, 360
70024915 ..... 301, 360
70024917 360
70024918 301
70024919 359
70024920 . 300, 301, 359, 360
70024922 301
70024924 ..... 299, 359
70024925 ..... 299, 359
70024961 ..... 299, 359
70025076 299
70025077 301
70025080 299
70025082 299
70025084 300
70025091 299
70025101 300
70025107 300

70025109.....300
7002511.....359
70025111.....299
70025112.....300, 360
70025115.....300
70025120.....301, 360
70025130.....427, 519
70025133.....300
70025135..299, 359, 428, 520
70025136.....359
70025137.....299, 359
70025140.....299, 359
70025142..300, 360, 427, 519
70025144..299, 359, 427, 520
70025145.....299, 359
70025146.....299, 359
70025149.....301
70025151.....300, 359
70025152...299, 359, 520
70025153.....299, 1032
70025154.....299, 359
70025155.....300
70025158.....300
70025162.....299
70025164..300, 360, 427, 519
70025171.....299
70025176.....299
70025178.....300
70025179.....300
70025180.....300
70025181...299, 359, 427
70025182.....300, 359
70025183.....300, 360
70025184.....300, 360
70025185.....300
70025200.....300, 360
70025203.....300
70025205...299, 359, 428
70025210.....300, 360
70025231.....299, 427
70025235.....300, 359
70025239.....299, 359
70025240.....300
70025242.....360, 519
70025477.....300
70025533.....301
70025660.....301
70025733.....428
70025768.....300
70025788.....360
70025877.....360
70025931.....300
70026210..301, 360, 427, 519
70026283.....785, 791
70026995.....300
70027432.....428, 520
70028185.....428, 520
7002821.....1040
7002822.....1040
7002823.....1040
7002828.....1040
70028540...360, 427, 519
70028699..... 360, 428
70029401..... 360
70029407..... 519
70029409..... 519
70029433..... 360
70029451..... 359
70029512..... 427
70029517.. 360, 427, 519
70029520.. 360, 427, 519
70029557.. 360, 427, 519
70029797..... 360
70030097..... 519
70030099..... 519
70030359..... 520
70030360..... 427
70030381..... 427, 520
70031055..... 427, 519
70031095..... 427
70031137..... 427
70031138..... 519
70031142..... 427, 519
70031143..... 427, 519
70031144..... 427, 519
70031388..... 428, 520
70031474..... 428, 520
70035212..... 301
7003655... 259, 263, 267, 271, 275, 279
7004275..... 1040
7004276..... 1040
70052577..... 781
7007207..... 536, 539
7007415.... 537, 539, 540
7007418..... 536
7007419..... 536
7007420..... 39
7007437..... 39
7007438..... 39
7007439..... 39, 537
7007446..... 39, 536, 539
7007489..... 543
7007986..... 779
7010543..... 59
7010545..... 785
7011016..... 73
7011043..... 73
7011044..... 73
7011048..... 73
7011062..... 73
7011311..... 75
7011346..... 57, 75, 667
7011354..... 75, 1032
7011355..... 667
7012513..... 565, 569
7012514..... 565, 569
7012558..... 565
7012706..... 524, 530
7012709..... 524
7012715..... 524
7012773..... 57, 75
7012941..... 59
7012942..... 59
7012944.... 59, 667, 1032
7012955..... 59
7012967..... 59
7012998..... 59, 787
7015003... 259, 263, 267, 271, 275, 279
7015013... 259, 263, 267, 271, 275, 279
7015014... 259, 263, 267, 271, 275, 279
7015015... 259, 263, 267, 271, 275, 279
7016314..... 105, 111
7016322..... 189, 191
7016328..... 283
7016331... 283, 299, 359, 428, 520, 1032
7016374..... 189, 191
7016654..... 1040
7016655..... 1040
7017162..... 649
7017163..... 649
7017164..... 649
7017185..... 649
7017195..... 649
7017402..... 667
7017405..... 59
7017451..... 75, 1032
7017495..... 75
7018936..... 526, 532
7018942..... 75
7018991..... 57, 75, 1032
7019680..... 565
7020043... 101, 103, 107, 109
7020108..... 565, 569
7020109..... 565, 569
7020110..... 565, 570
7020111..... 565, 570
7020175... 149, 153, 157, 161, 165
7020176... 149, 153, 157, 161, 165
7020190..... 565, 569
7020414..... 283
7020447..... 283
7020460..... 283
7020465... 283, 299, 359, 428, 520
7020468..... 283
7020471..... 283
7020479..... 283
7020486..... 283
7020492.... 300, 360, 427
7021249..... 39
7021256..... 537
7021265..... 537
7021275..... 39, 536, 539
7021293..... 537
7021375..... 75
7021636..... 75
7022300..... 537
7022301..... 536
7022311..... 39
7022314..... 39
7022321..... 39
7022340..... 539
7022368..... 39
7022371..... 39
7023306..... 113
7023347..... 113
7023881.....525
7023887.....530
7023922.....667
7023962.....539
7023964.....539, 540
7024005.....525
7024006.....531
7024038.....524, 530
7024042.....524
7024043.....524
7024044.....524, 530
7024064.....524, 530
7024065.....525, 531
7024068.....525
7024069.....526, 532
7024070.....525
7024071.....525, 531
7024072.....525, 531
7024073.....525, 531
7024075.....525, 531
7024076.....525, 531
7024077.....525, 531
7024078.....531
7024079.....531
7024080.....525
7024081.....525, 531
7024083.....525
7024084.....525
7024085.....526
7024087.....526
7024088.....526
7024089.....526
7024096.....532
7024097.....525
7024374.....113
7024375.....113, 1032
7024439.....113
7024440.....113
7024441.....113
7024442.....113
7024443.....113
7024444.....113
7024445.....113
7024446.....113
7024462.....773
7024463.....773
7024467.....773
7024469.....773
7024470.....773
7024471.....719, 773
7024472.....773
7024473.....773
7024474.....773
7024475.....773
7024478.....773
7024485...589, 593, 1032
7024488....589, 593, 597, 601
7024489....589, 593, 597, 601
7024530.....719
7024531.....719
7024532.....719
7024533.....719
7024534.....719
7024535.....719
7024536.....719

7024537 719
7024565 283
7024570 75
7024571 .... 75, 667, 1032
7024572 667
7024573 75
7024574 75
7024579 ... 283, 299, 359, 428, 520
7024580 ... 219, 223, 227, 231, 235, 239, 243, 247, 251, 255
7024581 ... 219, 223, 227, 231, 235, 239, 243, 247, 251, 255
7024582 ... 219, 223, 227, 231, 235, 239, 243, 247, 251, 255
7024583 ... 219, 223, 227, 231, 235, 239, 243, 247, 251, 255
7024584 ... 219, 223, 227, 231, 235, 239, 243, 247, 251, 255
7024598 ..... 189, 191
7024800 537
7024865 39
7024867 39
7024868 39
7024905 531
7024906 ..... 525, 531
7024907 531
7024908 ..... 525, 531
7024909 531
7024911 ..... 525, 531
7024913 ..... 524, 530
7024914 524
7024915 524
7024916 524
7024917 ..... 524, 530
7024918 ..... 524, 530
7024919 ..... 524, 530
7024920 ..... 524, 530
7024921 ..... 524, 530
7024922 ..... 524, 530
7024924 75
7024925 75
7024927 57
7026000 75
7026001 75
7026002 75
7026003 75
7026004 75
7026005 75
7026006 75
7026007 75
7026008 75
7026016 75
7026018 667
7026019 667
7026020 667
7026021 667
7026022 667
7026023 667
7026028 57
7026029 1032
7026031 1033
7026188 ..... 589, 593
7026571 113
7026597 ... 589, 593, 598, 602
7026608 ..... 283, 1032
7026626 ... 589, 593, 598, 602
7026980 532
7027042 ... 287, 303, 307, 311, 315, 319, 323, 327, 331, 363, 367, 371, 375, 379, 383, 387, 391, 395, 399, 431, 435, 441, 445, 457, 463, 475, 479, 483, 501, 505
7027043 ... 287, 303, 307, 311, 315, 319, 323, 327, 331, 363, 367, 371, 375, 379, 383, 387, 391, 395, 399, 432, 436, 442, 446, 458, 464, 475, 479, 483, 501, 505
7027044 ... 287, 303, 307, 311, 315, 319, 323, 327, 332, 364, 368, 371, 376, 380, 383, 388, 392, 396, 399, 432, 436, 442, 446, 458, 464, 475, 479, 484, 501, 505
7027045 ... 287, 303, 307, 311, 315, 319, 323, 328, 332, 364, 368, 372, 376, 380, 384, 388, 392, 396, 400, 432, 436, 442, 446, 458, 464, 475, 479, 484, 501, 506
7027235 283
7027236 283
7027239 283
7027240 283
7027276 283
7027740 39
7027773 773
7027774 773
7027775 773
7027776 773
7027777 773
7027778 773
7027779 773
7027780 773
7027790 283
7027791 283
7027792 283
7027799 .... 589, 593, 598, 602
7027887 ..... 565, 570
7029593 73
77143013 .. 149, 154, 158, 161, 165
77363233 ..... 943, 945
8007508 1020
80334079 532
80363179 95
80484084 ..... 932, 935
80604016 95
80604021 95
80934174 531
80934644 532
80983191 ..... 932, 936
8220051 941
8220115 935
8220164 931
8229242 ... 932, 936, 1032
8229249 ... 771, 964, 1032
8310056 .... 343, 345, 403, 405, 491, 511
8310070 .... 149, 153, 158, 161, 165, 659
8310129 .... 725, 727, 729, 731, 733, 735, 737, 739, 741, 743, 745, 747
8310658 212
8320270 1032
8405006 .... 295, 303, 307, 311, 315, 319, 323, 327, 331, 350, 356, 363, 367, 371, 375, 379, 383, 387, 391, 395, 399, 417, 423, 453, 471, 475, 479, 483, 495, 501, 505, 515, 553, 555, 557
8405007 ... 295, 349, 356, 417, 423, 453, 471, 495, 515
8405009 ... 105, 111, 495, 515
8405201 ... 295, 348, 355, 417, 423, 453, 471, 495, 515
8405204 ... 295, 348, 355, 417, 423, 453, 471, 495, 515
8405212 ..... 495, 515
8405213 ..... 495, 515
8406102 ... 295, 350, 356, 417, 423, 453, 471, 495, 515
8406109 .... 295, 453, 471
8406112 ... 295, 350, 356, 417, 423, 453, 471, 495, 515
8406201 ..... 495, 515
8406302 ... 295, 348, 354, 417, 423, 453, 471, 495, 515
8410011 ... 295, 350, 356, 417, 423, 453, 471
8410013 ... 260, 264, 268, 272, 276, 280, 296, 348, 355, 417, 423, 453, 471
8410014 ..... 495, 515
8580420 ..... 61, 63
8750024 ..... 123, 127
88261024 665
88411013 863
88521214 . 705, 707, 709, 711
88662523 .. 204, 208, 213
91143339 931
91143340 931
91203039 663
91403230 ..... 1001, 1003, 1005, 1007, 1009, 1011, 1013, 1015, 1017
91563070 . 348, 355, 417, 423, 495, 515
SEE NOTE 791, 793

Corporate Office
JLG Industries, Inc.
1 JLG Drive
McConnellsburg, PA 17233-9533 USA

(717) 485-5161 (Corporate)
(877) 554-5438 (Customer Support)
(717) 485-6417

Visit our website for JLG Worldwide Locations.
www.jlg.com

OSHKOSH™